UNITED STATES PATENT AND TRADEMARK OFFICE

COMMISSIONER FOR PATENTS
UNITED STATES PATENT AND TRADEMARK OFFICE
P.O. BOX 1450
ALEXANDRIA, VA 22313-1450
www.uspto.gov

WILLIAM COLLARD
COLLARD & ROE, P.C.
1077 NORTHERN BOULEVARD
ROSLYN, NY 11576

**COPY MAILED**

AUG 01 2005

**OFFICE OF PETITIONS**

In re Application of :
Ewe Birk :
Application No. 10/953,214 : ON PETITION
Filed: September 28, 2004 :
Attorney Docket No. :
BIRK 1 :

This is a decision on the Petition to Accord a Correct Filing Date Under 37 CFR § 1.10, filed June 29, 2005, requesting the above-identified application be accorded the filing date of September 29, 2004, instead of the presently accorded filing date of September 28, 2004.

The petition is **dismissed**.

Any further petition to revive the above-identified application must be submitted within TWO (2) MONTHS from the mail date of this decision. Extensions of time under 37 CFR 1.136(a) are permitted. The reconsideration request should include a cover letter entitled "Renewed Petition under 37 CFR § 1.182." This is **not** final agency action within the meaning of 5 U.S.C. § 704.

Applicant alleges the application was deposited in Express Mail service with the U.S. Postal Service, on September 29, 2004. In support of this assertion, Applicant provides in relevant part, a copy of the Express Mail Label No. EV42534550US. A review of the Express Mail Mailing Label reveals that the "Date In" indicates that the application was deposited on September 28, 2004.

STATUTE AND REGULATION

35 U.S.C. § 21(a) states that:

> The Director may by rule prescribe that any paper or fee required to be filed in the Patent and Trademark Office will be considered filed in the Office on the date on which it was deposited with the United States Postal Service or would have been deposited with the

> United States Postal Service but for postal service interruptions or emergencies designated by the Director.

In May, 2004, section 1.10(a) of title 37, Code of Federal Regulations, stated that:

> Any correspondence received by the U.S. Patent and Trademark Office (USPTO) that was delivered by the "Express Mail Post Office to Addressee" service of the United States Postal Service (USPS) will be considered filed with the USPTO on the date of deposit with the USPS. The date of deposit with the USPS is shown by the "date-in" on the "Express Mail" label or other official USPS notation. If the USPS deposit date cannot be determined, the correspondence will be accorded the USPTO receipt date as the filing date.

The PTO considers the date the paper or fee is shown to have been deposited as Express Mail as set forth in § 1.10(a) to be the "Date-In" on the Express Mail label.

Placing the "Date-In" on the Express Mail label by the postal clerk establishes that the package was actually received by the Postal Service. That is the date that verifies that the package was actually mailed.

Paragraph (b) of 37 CFR 1.10 cautions

> Correspondence should be deposited directly with an employee of the USPS to ensure that the person depositing the correspondence receives a legible copy of the "Express Mail" mailing label with the "date-in" clearly marked. Persons dealing indirectly with the employees of the USPS (such as by deposit in an "Express Mail" drop box) do so at the risk of not receiving a copy of the "Express Mail" mailing label with the desired "date-in" clearly marked. The paper(s) or fee(s) that constitute the correspondence should also include the "Express Mail" mailing label number thereon. See paragraphs (c), (d) and (e) of this section.

Finally, MPEP 513 cautions applicants that in instances in which there is a discrepancy between the "Date-In" on the Express Mail label and the date on the certificate of Express Mailing, the "Date-In" on the Express Mail label is controlling. See also "Revision of Patent Procedure," 48 *Fed. Reg.* at 2702, 1027 *Off. Gaz. Pat. Office* at 25. As such, any applicant choosing to

deposit an application in an Express mail receptacle, rather than deliver the application to an open U.S. Postal Service office and observe the "Date-In" entered on the Express Mail label, is on notice that he or she bears the risk that there may be a discrepancy between the "Date-In" on the Express Mail label and the date on the certificate of Express Mailing.[1] Applicants simply chose to deposit the above-identified application in an Express mail receptacle, rather than deliver the application to an open U.S. Postal Service office.

OPINION

The evidence presented in the instant petition has been carefully considered; however, it is not persuasive that the above-identified application is entitled to a filing date of September 29, 2004.

As to the Express Mail Mailing Label, the "Date in" indicates that the date of deposit is September 28, 2004. The application was accorded a filing date of September 28, 2004, and applicant alleges the application was filed September 29, 2004. As such, there is a "question regarding the date of mailing" within the meaning of 37 CFR 1.10.

37 CFR 1.8 provides a procedure by which the timely filing of papers and fees deposited with the U.S. Postal Service may be established without independent corroboration by an employee of the U.S. Postal Service (*i.e.*, established solely by the statement(s) from applicant or his or her counsel). The suggestion that 37 CFR 1.8 be applicable to application papers deposited the U.S. Postal Service for purposes of obtaining a filing date was considered and expressly rejected. The criticality of an application filing date was considered adequate to justify independent verification by an employee of the U.S. Postal Service of the date of deposit of the application papers with the U.S. Postal Service. *See* rulemaking entitled "Revision of Patent Procedure," published in the *Federal Register* at 48 *Fed. Reg.* 2696, 2702 (January 20, 1983),

---

[1] Specifically, the Office must rely on the actions or inactions of petitioners' duly authorized and voluntarily chosen representatives, and petitioners are bound by the consequences of those actions or inactions. Link v. Wabash, 370 U.S. 626, 633-34 (1962). As such representative chose to deposit the above-identified application in an Express mail receptacle, rather than deliver the application to an open U.S. Postal Service office and observe the "Date-In" entered on the Express Mail label, petitioners' must bear the consequences of such action (*i.e.*, that there may be a discrepancy between the "Date-In" on the Express Mail label and the date on the certificate of Express Mailing).

and in the Patent and Trademark Office *Official Gazette* at 1027 *Off. Gaz. Pat. Office* 9, 25 (February 1, 1983). Put simply, the insertion by a disinterested employee of the U.S. Postal Service of the date of deposit in the U.S. Postal Service by Express Mail on the Express Mail label of the envelop containing application papers is the *raison d'être* of 37 CFR 1.10.[2]

Where there is a question regarding mailing, the person mailing the paper or fee must establish the actual date of mailing by: (1) a copy of the Express Mail receipt showing the actual date of mailing, (2) a statement from the person who mailed the paper or fee averring to the fact that the mailing occurred on the date certified. See "Revision of Patent Procedure," 48 *Fed. Reg.* at 2697, 1027 *Off. Gaz. Pat. Office* at 12. As there is a discrepancy between the date of mailing (the "Date-In") on the Express Mail label, and the date Applicant asserts that the above-identified application was mailed, the Office is properly requiring adequate corroboration that the above-identified application was deposited in Express Mail on the date asserted.[3]

Applicant has failed to provide adequate corroboration that the application was deposited in Express Mail on the date asserted. Accordingly, the above-identified application is not entitled to a filing date of September 29, 2004.

## CONCLUSION

For the above stated reasons, the request that the above-identified application be accorded a filing date of September 29, 2004 is dismissed. Accordingly, the filing date accorded this application remains September 28, 2004.

Further correspondence with respect to this matter should be addressed as follows:

---

[2] In promulgating 37 CFR 1.10, the Office also considered other types of mail service (*e.g.*, registered mail and certified mail), but chose the "Express Mail" service since this service provides, *inter alia*, a legible mailing date on the "Express Mail" label for the records of both the applicant and the Office. See "Revision of Patent Procedure," 48 *Fed. Reg.* at 2697, 1027 *Off. Gaz. Pat. Office* 12-13.

[3] In response to objections to the use of affidavits and/or declarations to establish a filing date, the Office indicated that such affidavits or declarations are considered to explain activities that are supported by exhibits (*i.e.*, corroborate evidence). See "Revision of Patent Procedure," 48 *Fed. Reg.* at 2702-03, 1027 *Off. Gaz. Pat. Office* at 27-28. Thus, the Office appropriately requires the submission of corroborative documentary evidence to establish an application filing date.

By mail: Mail Stop PETITIONS
Commissioner for Patents
PO Box 1450
Alexandria, VA 22313-1450

By FAX: (571) 273-8300
Attn: Office of Petitions

By hand: Customer Window Located at:
U.S. Patent & Trademark Office
220 20th Street S.
Customer Window, Mail Stop PETITIONS
Crystal Plaza Two, Lobby Room 1B03
Arlington, VA 22202



Telephone inquiries concerning this matter should be directed to the undersigned at (571-272-3232) 305-0014.

Derek L. Woods
Petitions Attorney
Office of Petitions

UNITED STATES PATENT AND TRADEMARK OFFICE

UNITED STATES DEPARTMENT OF COMMERCE
United States Patent and Trademark Office
Address: COMMISSIONER FOR PATENTS
P.O. Box 1450
Alexandria, Virginia 22313-1450
www.uspto.gov

| APPL NO. | FILING OR 371 (c) DATE | ART UNIT | FIL FEE REC'D | ATTY.DOCKET NO | DRAWINGS | TOT CLMS | IND CLMS |
|---|---|---|---|---|---|---|---|
| 10/953,222 | 09/28/2004 | 2661 | 860 | NVDA/P000910 | 5 | 25 | 3 |

**CONFIRMATION NO. 9937**

**CORRECTED FILING RECEIPT**

*OC000000015498414*

26291
MOSER, PATTERSON & SHERIDAN L.L.P.
595 SHREWSBURY AVE, STE 100
FIRST FLOOR
SHREWSBURY, NJ 07702

Date Mailed: 03/18/2005

Receipt is acknowledged of this regular Patent Application. It will be considered in its order and you will be notified as to the results of the examination. Be sure to provide the U.S. APPLICATION NUMBER, FILING DATE, NAME OF APPLICANT, and TITLE OF INVENTION when inquiring about this application. Fees transmitted by check or draft are subject to collection. Please verify the accuracy of the data presented on this receipt. **If an error is noted on this Filing Receipt, please write to the Office of Initial Patent Examination's Filing Receipt Corrections, facsimile number 703-746-9195. Please provide a copy of this Filing Receipt with the changes noted thereon. If you received a "Notice to File Missing Parts" for this application, please submit any corrections to this Filing Receipt with your reply to the Notice. When the USPTO processes the reply to the Notice, the USPTO will generate another Filing Receipt incorporating the requested corrections (if appropriate).**

**Applicant(s)**

Thomas Maufer, Menlo Park, CA;
Suresh Rajan, San Jose, CA;
Edward Wai Yeung Liu, Milpitas, CA;
Sameer Nanda, San Jose, CA;
Paul J. Sidenblad, Cupertino, CA;

**Power of Attorney:**

Paul Carmichael–18679
James Sheridan–25435
John Kelly–33920
Raymond Moser Jr–34682
Stephen Pettigrew–35978
Richard Domingo–36784
Joseph Vo–43971
Ari Pramudji–45022
John Carey–51530
Stephanie Winner–52371

**Domestic Priority data as claimed by applicant**

This appln claims benefit of 60/508,361 10/03/2003

**Foreign Applications**

**If Required, Foreign Filing License Granted:** 11/23/2004

**The country code and number of your priority application, to be used for filing abroad under the Paris Convention, is US10/953,222**

**Projected Publication Date:** Request for Non-Publication Acknowledged

**Non-Publication Request:** Yes

**Early Publication Request:** No

**Title**

Systems and methods for autonomously and dynamically optimizing transmission power in a wireless network

**Preliminary Class**

370

---

## LICENSE FOR FOREIGN FILING UNDER
## Title 35, United States Code, Section 184
## Title 37, Code of Federal Regulations, 5.11 & 5.15

**GRANTED**

The applicant has been granted a license under 35 U.S.C. 184, if the phrase "IF REQUIRED, FOREIGN FILING LICENSE GRANTED" followed by a date appears on this form. Such licenses are issued in all applications where the conditions for issuance of a license have been met, regardless of whether or not a license may be required as set forth in 37 CFR 5.15. The scope and limitations of this license are set forth in 37 CFR 5.15(a) unless an earlier license has been issued under 37 CFR 5.15(b). The license is subject to revocation upon written notification. The date indicated is the effective date of the license, unless an earlier license of similar scope has been granted under 37 CFR 5.13 or 5.14.

This license is to be retained by the licensee and may be used at any time on or after the effective date thereof unless it is revoked. This license is automatically transferred to any related applications(s) filed under 37 CFR 1.53(d). This license is not retroactive.

The grant of a license does not in any way lessen the responsibility of a licensee for the security of the subject matter as imposed by any Government contract or the provisions of existing laws relating to espionage and the national security or the export of technical data. Licensees should apprise themselves of current regulations especially with respect to certain countries, of other agencies, particularly the Office of Defense Trade Controls, Department of State (with respect to Arms, Munitions and Implements of War (22 CFR 121-128)); the Office of Export Administration, Department of Commerce (15 CFR 370.10 (j)); the Office of Foreign Assets Control, Department of Treasury (31 CFR Parts 500+) and the Department of Energy.

**NOT GRANTED**

No license under 35 U.S.C. 184 has been granted at this time, if the phrase "IF REQUIRED, FOREIGN FILING LICENSE GRANTED" DOES NOT appear on this form. Applicant may still petition for a license under 37 CFR 5.12, if a license is desired before the expiration of 6 months from the filing date of the application. If 6 months has lapsed from the filing date of this application and the licensee has not received any indication of a secrecy order under 35 U.S.C. 181, the licensee may foreign file the application pursuant to 37 CFR 5.15(b).

UNITED STATES PATENT AND TRADEMARK OFFICE

UNITED STATES DEPARTMENT OF COMMERCE
United States Patent and Trademark Office
Address: COMMISSIONER FOR PATENTS
P.O. Box 1450
Alexandria, Virginia 22313-1450
www.uspto.gov

| APPL NO. | FILING OR 371 (c) DATE | ART UNIT | FIL FEE REC'D | ATTY.DOCKET NO | DRAWINGS | TOT CLMS | IND CLMS |
|---|---|---|---|---|---|---|---|
| 10/953,263 | 09/29/2004 | 1713 | 1370 | 2003U036.US | 4 | 26 | 3 |

**CONFIRMATION NO. 2335**

**CORRECTED FILING RECEIPT**

*OC000000017532826*

Univation Technologies, LLC
Suite 1950
5555 San Felipe
Houston, TX 77056

Date Mailed: 11/28/2005

Receipt is acknowledged of this regular Patent Application. It will be considered in its order and you will be notified as to the results of the examination. Be sure to provide the U.S. APPLICATION NUMBER, FILING DATE, NAME OF APPLICANT, and TITLE OF INVENTION when inquiring about this application. Fees transmitted by check or draft are subject to collection. Please verify the accuracy of the data presented on this receipt. **If an error is noted on this Filing Receipt, please mail to the Commissioner for Patents P.O. Box 1450 Alexandria Va 22313-1450. Please provide a copy of this Filing Receipt with the changes noted thereon. If you received a "Notice to File Missing Parts" for this application, please submit any corrections to this Filing Receipt with your reply to the Notice. When the USPTO processes the reply to the Notice, the USPTO will generate another Filing Receipt incorporating the requested corrections (if appropriate).**

**Applicant(s)**

David Jack Sandell, Beaumont, TX;
Marjorie E. King, Baton Rouge, LA;
Fred David Ehrman, Houston, TX;

**Power of Attorney:**

Raul Montes--32545
Stephen Koch--37660
Osborne McKinney--40084
Kevin Faulkner--45427

**Domestic Priority data as claimed by applicant**

This appln claims benefit of 60/512,502 10/17/2003
and claims benefit of 60/512,355 10/17/2003

**Foreign Applications**

**If Required, Foreign Filing License Granted:** 11/15/2004

**The country code and number of your priority application, to be used for filing abroad under the Paris Convention, is US10/953,263**

**Projected Publication Date:** 12/01/2005

**Non-Publication Request:** No

**Early Publication Request:** No

**Title**

Polymerization monitoring and control using improved leading indicators

**Preliminary Class**

526

## PROTECTING YOUR INVENTION OUTSIDE THE UNITED STATES

Since the rights granted by a U.S. patent extend only throughout the territory of the United States and have no effect in a foreign country, an inventor who wishes patent protection in another country must apply for a patent in a specific country or in regional patent offices. Applicants may wish to consider the filing of an international application under the Patent Cooperation Treaty (PCT). An international (PCT) application generally has the same effect as a regular national patent application in each PCT-member country. The PCT process **simplifies** the filing of patent applications on the same invention in member countries, but **does not result** in a grant of "an international patent" and does not eliminate the need of applicants to file additional documents and fees in countries where patent protection is desired.

Almost every country has its own patent law, and a person desiring a patent in a particular country must make an application for patent in that country in accordance with its particular laws. Since the laws of many countries differ in various respects from the patent law of the United States, applicants are advised to seek guidance from specific foreign countries to ensure that patent rights are not lost prematurely.

Applicants also are advised that in the case of inventions made in the United States, the Director of the USPTO must issue a license before applicants can apply for a patent in a foreign country. The filing of a U.S. patent application serves as a request for a foreign filing license. The application's filing receipt contains further information and guidance as to the status of applicant's license for foreign filing.

Applicants may wish to consult the USPTO booklet, "General Information Concerning Patents" (specifically, the section entitled "Treaties and Foreign Patents") for more information on timeframes and deadlines for filing foreign patent applications. The guide is available either by contacting the USPTO Contact Center at 800-786-9199, or it can be viewed on the USPTO website at http://www.uspto.gov/web/offices/pac/doc/general/index.html.

For information on preventing theft of your intellectual property (patents, trademarks and copyrights), you may wish to consult the U.S. Government website, http://www.stopfakes.gov. Part of a Department of Commerce initiative, this website includes self-help "toolkits" giving innovators guidance on how to protect intellectual property in specific countries such as China, Korea and Mexico. For questions regarding patent enforcement issues, applicants may call the U.S. Government hotline at 1-866-999-HALT (1-866-999-4158).

---

## LICENSE FOR FOREIGN FILING UNDER
## Title 35, United States Code, Section 184
## Title 37, Code of Federal Regulations, 5.11 & 5.15

**GRANTED**

The applicant has been granted a license under 35 U.S.C. 184, if the phrase "IF REQUIRED, FOREIGN FILING LICENSE GRANTED" followed by a date appears on this form. Such licenses are issued in all applications where the conditions for issuance of a license have been met, regardless of whether or not a license may be required as set forth in 37 CFR 5.15. The scope and limitations of this license are set forth in 37 CFR 5:15(a) unless an earlier license has been issued under 37 CFR 5.15(b). The license is subject to revocation upon written notification. The

date indicated is the effective date of the license, unless an earlier license of similar scope has been granted under 37 CFR 5.13 or 5.14.

This license is to be retained by the licensee and may be used at any time on or after the effective date thereof unless it is revoked. This license is automatically transferred to any related applications(s) filed under 37 CFR 1.53(d). This license is not retroactive.

The grant of a license does not in any way lessen the responsibility of a licensee for the security of the subject matter as imposed by any Government contract or the provisions of existing laws relating to espionage and the national security or the export of technical data. Licensees should apprise themselves of current regulations especially with respect to certain countries, of other agencies, particularly the Office of Defense Trade Controls, Department of State (with respect to Arms, Munitions and Implements of War (22 CFR 121-128)); the Bureau of Industry and Security, Department of Commerce (15 CFR parts 730-774); the Office of Foreign Assets Control, Department of Treasury (31 CFR Parts 500+) and the Department of Energy.

**NOT GRANTED**

No license under 35 U.S.C. 184 has been granted at this time, if the phrase "IF REQUIRED, FOREIGN FILING LICENSE GRANTED" DOES NOT appear on this form. Applicant may still petition for a license under 37 CFR 5.12, if a license is desired before the expiration of 6 months from the filing date of the application. If 6 months has lapsed from the filing date of this application and the licensee has not received any indication of a secrecy order under 35 U.S.C. 181, the licensee may foreign file the application pursuant to 37 CFR 5.15(b).

Customer Copy

EXPRESS MAIL

EV 316743266

Post Office To Addressee

ORIGIN (POSTAL USE ONLY)

DELIVERY (POSTAL USE ONLY)

OCT 13 2004

UNIVATION TECHNOLOGIES LAW DEPT.

FROM: 713 892-3669

UNIVATION TECHNOLOGIES
5555 SAN FELIPE ST STE 1950
HOUSTON TX 77056-2744
Ref: 2003U036-US
Attn: Tammy Hodges

TO: 703 308-4357

MAIL STOP PATENT APPLICATIONS
Commissioner for Patents
P.O. Box 1450
Alexandria, VA 22313-1450

FOR PICKUP OR TRACKING CALL 1-800-222-1811 www.usps.com

BEST AVAILABLE COPY

**RECEIVED**

OCT 13 2004

UNIVATION TECHNOLOGIES
LAW DEPT.

Action:
Due Date:
Deadline:
Docketed by:
Date docketed: 10-19-04

UNITED STATES PATENT AND TRADEMARK OFFICE

Commissioner for Patents
United States Patent and Trademark Office
P.O. Box 1450
Alexandria, VA 22313-1450
www.uspto.gov

**Howard IP Law Group**
**P.O. Box 226**
**Fort Washington, PA 19034**

COPY MAILED

FEB 0 5 2008

OFFICE OF PETITIONS

| | | |
|---|---|---|
| In re Application of | : | |
| David Vilkomerson et al. | : | |
| Application No. 10/953,276 | : | DECISION ON PETITION |
| Filed: September 29, 2004 | : | TO WITHDRAW |
| Attorney Docket No. DVX-3-US | : | FROM RECORD |
| | : | |

This is a decision on the Requests to Withdraw as attorney or agent of record under 37 C.F.R. § 1.36(b), filed January 10, 2008.

The request is **NOT APPROVED**.

A grantable request to withdraw as attorney/agent of record must be signed by every attorney/agent seeking to withdraw or contain a clear indication that one attorney is signing on behalf of another/others. A request to withdraw will not be approved unless at least 30 (thirty) days would remain between the date of approval and the later of the expiration date of a time to file a response or the expiration date of the maximum time period which can be extended under 37 C.F.R. § 1.136(a).

The Office cannot approve the request at this time since the reasons provided do not meet any of the conditions under the mandatory or permissive categories enumerated in 37 CFR 10.40. Section 10.40 of Title 37 of the Code of Federal Regulation states, "[a] practitioner shall not withdraw from employment in a proceeding before the Office without permission from the Office[.]" More specifically, 37 CFR 10.40 states, "[i]f paragraph (b) of this section is not applicable, a practitioner may not request permission to withdraw in matter pending before the Office unless such request or such withdrawal is" for one the permissive reasons listed in 37 CFR 10.40(c). The reason set forth in the request, "files were reassigned to the below mentioned firm . . . ," does not meet any of the conditions set forth in 37 CFR 10.40.

A courtesy copy of this decision is being mailed to applicant.

All future communications from the Office will continue to be directed to the above-listed address until otherwise notified by applicant.

A non-final rejection was mailed on September 6, 2007. Failure to timely respond will result in the abandonment of this application.

Telephone inquiries concerning this decision should be directed to Kimberly Inabinet at 571-272- 4618.

Kimberly Inabinet
Petitions Examiner
Office of Petitions

cc: David Vilkomerson
2 Carter Brook Road
Princeton, NJ 08540

cc: The Plevy Law Firm
10 Rutgers Place
Trenton, NJ 08618

UNITED STATES PATENT AND TRADEMARK OFFICE

Commissioner for Patents
United States Patent and Trademark Office
P.O. Box 1450
Alexandria, VA 22313-1450
www.uspto.gov

**Howard IP Law Group**
**P.O. Box 226**
**Fort Washington, PA 19034**

COPY MAILED

APR 14 2008

OFFICE OF PETITIONS

In re Application of :
David Vilkomerson et al. :
Application No. 10/953,276 :
Filed: September 29, 2004 :
Attorney Docket No. DVX-3-US :

DECISION ON PETITION
TO WITHDRAW
FROM RECORD

This is a decision on the Request to Withdraw as attorney or agent of record under 37 C.F.R. § 1.36(b), filed February 29, 2008.

The request is **NOT APPROVED** as moot.

A review of the file record indicates that the power of attorney to Edward J. Howard and all attorneys/agents of record has been revoked by the assignee of the patent application on March 6, 2008. Accordingly, the request to withdraw under 37 C.F.R. § 1.36(b) is moot.

All future communications from the Office will continue to be directed to the below-listed address until otherwise notified by applicant.

Telephone inquires concerning this decision should be directed to Kimberly Inabinet at 571-272- 4618.

Kimberly Inabinet
Petitions Examiner
Office of Petitions

cc: The Plevy Law Firm
10 Rutgers Place
Trenton, NJ 08618

UNITED STATES PATENT AND TRADEMARK OFFICE

UNITED STATES DEPARTMENT OF COMMERCE
United States Patent and Trademark Office
Address: COMMISSIONER FOR PATENTS
P.O. Box 1450
Alexandria, Virginia 22313-1450
www.uspto.gov

| APPLICATION NUMBER | FILING OR 371(C) DATE | FIRST NAMED APPLICANT | ATTY. DOCKET NO./TITLE |
|---|---|---|---|
| 10/953,276 | 09/29/2004 | David Vilkomerson | DVX-3-US |

**CONFIRMATION NO. 4202**

**POWER OF ATTORNEY NOTICE**

45722
Howard IP Law Group
P.O. Box 226
Fort Washington, PA 19034

*OC000000028850989*

Date Mailed: 03/17/2008

## NOTICE REGARDING CHANGE OF POWER OF ATTORNEY

This is in response to the Power of Attorney filed 03/06/2008.

- The Power of Attorney to you in this application has been revoked by the assignee who has intervened as provided by 37 CFR 3.71. Future correspondence will be mailed to the new address of record(37 CFR 1.33).

/hmohammed/

Office of Initial Patent Examination (571) 272-4000 or 1-800-PTO-9199

UNITED STATES PATENT AND TRADEMARK OFFICE

Commissioner for Patents
United States Patent and Trademark Office
P.O. Box 1450
Alexandria, VA 22313-1450
www.uspto.gov

MAILED

SEP 1 2 2005
Director's Office
Group 3700

Mark A. Pellegrini
J. Mark Holland & Associates, a Professional Law Corp.
3 Civic Plaza, Suite 210
Newport Beach, CA 92660

| | | |
|---|---|---|
| In re application of<br>Donald O. Olson | :<br>: | **DECISION ON PETITION**<br>**TO MAKE SPECIAL** |
| | : | **UNDER 37 CFR. 1.102(c)** |
| Serial Number: 10/953,277<br>Filed: September 29, 2004 | :<br>: | |

For: **SPRINKLER APPARATUS AND RELATED METHODS**

This is a decision on the petition filed on February 28, 2005, under 37 CFR. 1.102(c) to make special the above identified application because of the age/health of the applicant. Since the requirements of the M.P.E.P Section 708.02 IV have been met, the petition will be GRANTED.

The examiner is directed (1) to make an interference search for possible interfering applications, (2) to promptly examine this application out of turn, and (3) if any interfering application is discovered, to examine such application simultaneously and state in the first official letter of such application that it is being taken out of turn because of a possible interference.

Petitioner is advised that this application will continue to be special, throughout its entire prosecution and pendency, including interference or appeal, if any, only is Petitioner makes a prompt bona-fide effort, in response to each Office action, to place the application in condition for allowance, even if it is necessary to conduct an interview with the Examiner to accomplish this purpose.

**Summary:** Decision on Petition **GRANTED**.

Richard A. Bertsch
Director
Technology Center 3700
(571) 272-3750

rt: 9/08/05

PATENT
Attorney Docket No. 08049.0979-00

**IN THE UNITED STATES PATENT AND TRADEMARK OFFICE**

| | | |
|---|---|---|
| In re U.S. Patent No.: 7,070,104 | ) | |
| | ) | |
| Inventors: Karen E. Schenck and Charles E. Bravo | ) | **ATTN: CERTIFICATE OF CORRECTION BRANCH** |
| | ) | |
| Issue Date: July 4, 2006 | ) | |
| | ) | |
| For: Scannable Article Having a Signature Section with Alignment Bars | ) | |

Commissioner for Patents
P.O. Box 1450
Alexandria, VA 22313-1450

**VIA EFS-WEB**

Sir:

**REQUEST FOR CERTIFICATE OF CORRECTION**

Pursuant to 35 U.S.C. § 255, and 37 C.F.R. § 1.323, this is a request for a Certificate of Correction in the above-identified patent. The mistakes identified in the appended Form are of a clerical or typographical nature, or of minor character, and resulted from an error made in good faith by patentees.

The complete Certificate of Correction involves one (1) page. Issuance of the Certificate of Correction containing the corrections is earnestly requested.

OK TO ENTER: /D.H./
/Daniel Hess/
01/11/2010

Please charge any required fees not included herewith to Deposit Account 06-0916.

Respectfully submitted,

FINNEGAN, HENDERSON, FARABOW,
GARRETT & DUNNER, L.L.P.

Dated: December 17, 2009

By: /Melanie Grover/

Melanie Grover
Reg. No. 63,599
(202) 408-4000

SPE RESPONSE FOR CERTIFICATE OF CORRECTION

Paper No.: ____

DATE : 3/17/08

TO SPE OF : ART UNIT 2874

SUBJECT : Request for Certificate of Correction for Appl. No.: 10/953288 Patent No: 7236664 B2

A response is requested with respect to a request for a certificate of correction.

With respect to the change(s) requested to correct Office and/or Applicant's errors, should the patent read as shown in the certificate of correction attached herewith or the COCIN document(s), in IFW images for the above-identified patented application? No new matter should be introduced, nor should the scope or meaning of the claims be changed.

If the response is for an IFW, within 7 days, please complete and forward the response, to the employee (named below) via scanning into application images, using document code COCX.

If the response is for a paper file wrapper, please complete the response and forward the response with the paper file wrapper, to the employee (named below), within 7 days, to:

Certificates of Correction Branch (CofC)
South Tower - 9A22
Palm Location 7580

VIRGINIA TOLBERT
Certificates of Correction Branch
703-308-9390 ext. 113

Thank You For Your Assistance

The request for issuing the above-identified correction(s) is hereby:
Note your decision on the appropriate box.

- ☑ Approved — All changes apply.
- ☐ Approved In Part — Specify below which changes do not apply.
- ☐ Denied — State the reasons for denial below.

Comments: OK to enter correction, the error is clerical and does not affect the scope of the invention.

Michelle P Connelly-Cushwa

SPE

2874
Art Unit

PTOL-306 (REV. 7/03) U.S. DEPARTMENT OF COMMERCE Patent and Trademark Office

UNITED STATES PATENT AND TRADEMARK OFFICE

Commissioner for Patents
United States Patent and Trademark Office
P.O. Box 1450
Alexandria, VA 22313-1450
www.uspto.gov

E I DU PONT DE NEMOURS AND COMPANY
LEGAL PATENT RECORDS CENTER
BARLEY MILL PLAZA 25/1122B
4417 LANCASTER PIKE
WILMINGTON DE 19805

MAILED

JUN 07 2010

OFFICE OF PETITIONS

In re Application of
Wiebke Becker et al.
Application No. 10/953,311
Filed: September 29, 2004
Attorney Docket No: FA1290USNA

ON PETITION

This is a decision on the petition filed April 23, 2010 under 37 CFR 1.137(b),[1] to revive the above-identified application.

The petition is **GRANTED**.

This application became abandoned for failure to timely reply to the non-Final Office Action mailed April 9, 2008. A shortened statutory period of three months was set for replying to the non-Final Office Action. No response having been timely filed, this application became abandoned July 10, 2008. Accordingly, a Notice of Abandonment was mailed December 31, 2008.

This matter is being referred to Technology Center 1796 for appropriate action on the amendment filed April 23, 2010.

Telephone inquiries concerning this matter should be directed to the undersigned Petitions Attorney at (571) 272-3212.

Patricia Faison-Ball
Senior Petitions Attorney
Office of Petitions

---

[1]Effective December 1, 1997, the provisions of 37 CFR 1.137(b) now provide that where the delay in reply was unintentional, a petition may be filed to revive an abandoned application or a lapsed patent pursuant to 37 CFR 1.137(b). A grantable petition filed under the provisions of 37 CFR 1.137(b) must be accompanied by:

(1) the required reply, unless previously filed. In a nonprovisional application abandoned for failure to prosecute, the required reply may be met by the filing of a continuing application. In a nonprovisional application filed on or after June 8, 1995, and abandoned for failure to prosecute, the required reply may also be met by the filing of a request for continued examination in compliance with § 1.114. In an application or patent, abandoned or lapsed for failure to pay the issue fee or any portion thereof, the required reply must be the payment of the issue fee or any outstanding balance thereof. In an application abandoned for failure to pay the publication fee, the required reply must include payment of the publication fee.

(2) the petition fee as set forth in 37 CFR 1.17(m);

(3) a statement that the entire delay in filing the required reply from the due date for the reply until the filing of a grantable petition pursuant to 37 CFR 1.137(b) was unintentional. The Commissioner may required additional information where there is a question whether the delay was unintentional; and

(4) any terminal disclaimer (and fee as set forth in 37 CFR 1.20(d)) required pursuant to 37 CFR 1.137(c)).

UNITED STATES PATENT AND TRADEMARK OFFICE

Commissioner for Patents
United States Patent and Trademark Office
P.O. Box 1450
Alexandria, VA 22313-1450
www.uspto.gov

**Darby & Darby P.C.**
**P.O. Box 770**
**Church Street Station**
**New York, NY 10008**

**COPY MAILED**

FEB 01 2008

**OFFICE OF PETITIONS**

| | | |
|---|---|---|
| In re Application of | : | |
| Todd C. Lucas et al. | : | |
| Application No. 10/953,313 | : | DECISION ON PETITION |
| Filed: September 29, 2004 | : | TO WITHDRAW |
| Attorney Docket No. 20167/0201612-US0 | : | FROM RECORD |
| | : | |

This is a decision on the Request to Withdraw as attorney or agent of record under 37 C.F.R. § 1.36(b), filed August 29, 2007.

The request is **APPROVED**.

A grantable request to withdraw as attorney/agent of record must be signed by every attorney/agent seeking to withdraw or contain a clear indication that one attorney is signing on behalf of another/others. A request to withdraw will not be approved unless at least 30 (thirty) days would remain between the date of approval and the later of the expiration date of a time to file a response or the expiration date of the maximum time period which can be extended under 37 C.F.R. § 1.136(a).

The request was signed by John W. Branch on behalf of all attorneys of record. All attorneys/agents have been withdrawn. Applicant is reminded that there is no attorney of record at this time.

The request to change the correspondence of record is not acceptable as the requested correspondence address is not that of: (1) the first named signing inventor; or (2) an intervening assignee of the entire interest under 37 C.F.R 3.71. All future communications from the Office will be directed to the first named signing inventor at the first copied address below until otherwise properly notified by the applicant.

There is no outstanding Office action at this time.

Telephone inquiries concerning this decision should be directed to Terri Williams at 571-272-2991.

T. Williams

Terri Williams
Petitions Examiner
Office of Petitions

cc: **Todd C. Lucas**
**15410 NE 157th Street**
**Woodinville, WA 98072**

cc: **Infinium Labs, Inc.**
**c/o Phantom Entertainment, Inc.**
**222 Grace Church Street**
**Suite 302**
**Port Chester, NY 10573-5155**

UNITED STATES PATENT AND TRADEMARK OFFICE

UNITED STATES DEPARTMENT OF COMMERCE
United States Patent and Trademark Office
Address: COMMISSIONER FOR PATENTS
P.O. Box 1450
Alexandria, Virginia 22313-1450
www.uspto.gov

| APPLICATION NUMBER | FILING OR 371(C) DATE | FIRST NAMED APPLICANT | ATTY. DOCKET NO./TITLE |
|---|---|---|---|
| 10/953,313 | 09/29/2004 | Todd C. Lucas | 20167/0201612-US0 |

**CONFIRMATION NO. 2360**

**POWER OF ATTORNEY NOTICE**

7278
DARBY & DARBY P.C.
P.O. BOX 770
Church Street Station
New York, NY 10008-0770

*OC000000028046228*

Date Mailed: 01/31/2008

## NOTICE REGARDING CHANGE OF POWER OF ATTORNEY

This is in response to the Power of Attorney filed 08/29/2007.

- The withdrawal as attorney in this application has been accepted. Future correspondence will be mailed to the new address of record. 37 CFR 1.33.

/tswilliams/

Office of Initial Patent Examination (571) 272-4000 or 1-800-PTO-9199

UNITED STATES PATENT AND TRADEMARK OFFICE

Commissioner for Patents
United States Patent and Trademark Office
P.O. Box 1450
Alexandria, VA 22313-1450
www.uspto.gov

TODD C. LUCAS
15410 NE 157TH STREET
WOODINVILLE WA 98072

MAILED

JUL 13 2010

OFFICE OF PETITIONS

In re Application of :
Lucas, et al/ :
Application No. 10/953,313 :
Filed: 29 September, 2004 :
Attorney Docket No. 20167/0201612-US0 :

DECISION

This is a decision on the papers considered as petition filed on 14 June, 2010, for revival of an application abandoned due to unavoidable delay pursuant to 37 C.F.R. §1.137(a); alternatively, pursuant to 37 C.F.R. §1.137(b) for revival of an application abandoned due to unintentional delay.

**NOTES:**

*Petitioner has paid no fee and/or provided no fee authorization for the petition pursuant to 37 C.F.R. §1.137(a). The fee is required*

*There is no indication that Petitioner herein was ever empowered to prosecute the instant application. If Petitioner desires to receive future correspondence regarding this application, the appropriate power of attorney documentation (with certificate pursuant to 37 C.F.R. §3.73(b) where appropriate) must be submitted. A courtesy copy of this decision will be mailed to Petitioner. However, all future correspondence will be directed to the address of record until such time as appropriate instructions are received to the contrary.*

*Thus, the address on the petition is different than that of record. If Petitioner desires to receive future correspondence regarding this application, the appropriate Notice must be submitted. Again: a courtesy copy of this decision will be mailed to Petitioner, however, all future correspondence will be directed to the address of record until such time as appropriate instructions are received to the contrary.*

*It is not apparent whether the person signing the statement of unintentional delay was in a position to have firsthand or direct knowledge of the facts and circumstances of the delay at issue. And a proper statement of unintentional delay is not present. Petitioner will wish to refer to and use the proper forms in this regard because they contain the proper averments as required under the Rules of Practice.*

The petition pursuant to 37 C.F.R. §1.137(a) is **DISMISSED**; the petition pursuant to 37 C.F.R. §1.137(b) is **DISMISSED**.

As to Allegation of
Unavoidable Delay

The requirements of a grantable petition pursuant to 37 C.F.R. §1.137(a) are the petition and fee therefor, a reply, a proper showing of unavoidable delay under the regulation, and, where applicable, a terminal disclaimer and fee.

**Petitioner does not appear to have satisfied the fee and showing requirements (as to unavoidable delay) under the rule.**

*Petitioners' attentions always are directed to the guidance in the Commentary at MPEP §711.03(c) as to the showing regarding unavoidable delay and a petition pursuant to 37 C.F.R. §1.137(a).*

As to the Allegations
of Unintentional Delay

The requirements of a grantable petition pursuant to 37 C.F.R. §1.137(b) are the petition and fee therefor, a reply, a proper statement and/or showing of unintentional delay under the regulation, and, where applicable, a terminal disclaimer and fee

*Particularly in view of the extended period of abandonment, it appears that Petitioner has not satisfied the statement/showing requirement pursuant to the regulations at 37 C.F.R. §1.137(b).*

*Petitioners' attentions always are directed to the guidance in the Commentary at MPEP §711.03(c)(II).*

BACKGROUND

The record reflects as follows:

Petitioner failed to reply timely and properly to the non-final Office action mailed on 20 March, 2008, with reply due absent extension of time on or before 20 June, 2008.

The application went abandoned after midnight 20 June, 2008.

The Office mailed a Notice of Abandonment on 24 October, 2008.

On 14 June, 2010, Petitioner filed, *inter alia*:

- a petition without fee, averring unavoidable delay pursuant to 37 C.F.R. §1.137(a), with insufficient showing as to unavoidable delay and a reply in the form of an amendment; and

- alternatively a petition with fee averring unintentional delay pursuant to 37 C.F.R. §1.137(b), with a reply as identified above, and an insufficient statement as to unintentional delay (i.e., particularly in view of the extended period of abandonment, and, further, not conforming with the regulatory requirements) and no indication that Petitioner was in a position to make the statement in any case and no showing of diligent inquiry so as to provide the basis of such a statement—further averring that a change of address had been submitted, but no documentary evidentiary basis for the averment.

Moreover, is noted that as of this writing no proper Notice of Revocation/Power of Attorney (with certificate pursuant to 37 C.F.R. §3.73(b) where appropriate) appears of record as to Petitioner's authority.

The Office may not consider the substance of a petition pursuant to 37 C.F.R. §1.137(a) in the absence of the petition fee.

*Petitioners' attentions always are directed to the guidance in the Commentary at MPEP §711.03(c ) as to the showing regarding unavoidable delay and a petition pursuant to 37 C.F.R. §1.137(a).*

In the absence of documentary support for his averments Petitioner will not be able to satisfy the requirements of a petition averring unavoidable delay pursuant to 37 C.F.R. §1.137(a). Again, Petitioners' attentions always are directed to the guidance in the Commentary at MPEP §711.03(c)(II) for the showing required pursuant to 37 C.F.R. §1.137(a), which provides in pertinent part:

***

**...Unavoidable Delay**

*As discussed above, "unavoidable" delay is the epitome of "unintentional" delay. Thus, an intentional delay precludes revival under 37 C.F.R..§137(a) ("unavoidable" delay) or 37 C.F.R. §1.137(b) ("unintentional" delay). See* Maldague, *10 USPQ2d at 1478.*

*Decisions on reviving abandoned applications on the basis of "unavoidable" delay have adopted the reasonably prudent person standard in determining if the delay was unavoidable:*

> The word 'unavoidable' . . . is applicable to ordinary human affairs, and requires no more or greater care or diligence than is generally used and observed by

> prudent and careful men in relation to their most important business. It permits them in the exercise of this care to rely upon the ordinary and trustworthy agencies of mail and telegraph, worthy and reliable employees, and such other means and instrumentalities as are usually employed in such important business. If unexpectedly, or through the unforeseen fault or imperfection of these agencies and instrumentalities, there occurs a failure, it may properly be said to be unavoidable, all other conditions of promptness in its rectification being present.

In re Mattullath, *38 App. D.C. 497, 514-15 (1912)(quoting* Pratt, *1887 Dec. Comm'r Pat. 31, 32-33 (1887)); see also* Winkler v. Ladd, *221 F. Supp. 550, 552, 138 USPQ 666, 667-68 (D.D.C. 1963),* aff'd, *143 USPQ 172 (D.C. Cir. 1963);* Ex parte Henrich, *1913 Dec. Comm'r Pat. 139, 141 (1913). In addition, decisions on revival are made on a "case-by-case basis, taking all the facts and circumstances into account."* Smith v. Mossinghoff, *671 F.2d 533, 538, 213 USPQ 977, 982 (D.C. Cir. 1982). Finally, a petition cannot be granted where a petitioner has failed to meet his or her burden of establishing that the delay was "unavoidable."* Haines v. Quigg, *673 F. Supp. 314, 316-17, 5 USPQ2d 1130, 1131-32 (N.D. Ind. 1987).*

*A delay resulting from an error (e.g., a docketing error) on the part of an employee in the performance of a clerical function may provide the basis for a showing of "unavoidable" delay, provided it is shown that:*

> *(A)the error was the cause of the delay at issue;*
>
> *(B)there was in place a business routine for performing the clerical function that could reasonably be relied upon to avoid errors in its performance; and*
> *(C)the employee was sufficiently trained and experienced with regard to the function and routine for its performance that reliance upon such employee represented the exercise of due care.*

*See* In re Egbers, *6 USPQ2d 1869, 1872 (Comm'r Pat. 1988),* rev'd on other grounds sub nom., Theodor Groz & Sohne & Ernst Bechert Nadelfabrik KG v. Quigg, *10 USPQ2d 1787 (D.D.C. 1988);* In re Katrapat, *6 USPQ2d 1863, 1867-68 (Comm'r Pat. 1988). For example, where an application becomes abandoned as a consequence of a change of correspondence address (the Office action being mailed to the old, uncorrected address and failing to reach the applicant in sufficient time to permit a timely reply) an adequate showing of "unavoidable" delay will require a showing that due care was taken to adhere to the requirement for prompt notification in each concerned application of the change of address (see MPEP § 601.03), and must include an adequate showing that a timely notification of the change of address was filed in the application concerned, and in a manner reasonably calculated to call attention to the fact that it was a notification of a change of address. The following do not constitute proper notification of a change in correspondence address:*

*(A)the mere inclusion, in a paper filed in an application for another purpose, of an address differing from the previously provided correspondence address, without mention of the fact that an address change was being made;*

*(B)the notification on a paper listing plural applications as being affected (except as provided for under the Customer Number practice - see MPEP § 403); or*

*(C)the lack of notification, or belated notification, to the U.S. Patent and Trademark Office of the change in correspondence address.*

*Delay resulting from the lack of knowledge or improper application of the patent statute, rules of practice or the MPEP, however, does not constitute "unavoidable" delay. See* Haines, *673 F. Supp. at 317, 5 USPQ2d at 1132;* Vincent v. Mossinghoff, *230 USPQ 621, 624 (D.D.C. 1985);* Smith v. Diamond, *209 USPQ 1091 (D.D.C. 1981);* Potter v. Dann, *201 USPQ 574 (D.D.C. 1978);* Ex parte Murray, *1891 Dec. Comm'r Pat. 130, 131 (1891). For example, as 37 C.F.R. 1.116 and 1.135(b) are manifest* that proceedings concerning an amendment after final rejection will not operate to avoid abandonment of the application in the absence of a timely and proper appeal, a delay is not "unavoidable" when the applicant simply permits the maximum extendable statutory period for reply to a final Office action to expire while awaiting a notice of allowance or other action.

Likewise, as a "reasonably prudent person" would file papers or fees in compliance with 37 C.F.R. §1.8 or §1.10 to ensure their timely filing in the USPTO, as well as preserve adequate evidence of such filing, a delay caused by an applicant's failure to file papers or fees in compliance with 37 C.F.R. §1.8 and §1.10 does not constitute "unavoidable" delay. See *Krahn*, 15 USPQ2d at 1825. Finally, a delay caused by an applicant's lack of knowledge or improper application of the patent statute, rules of practice or the MPEP is not rendered "unavoidable" due to: (A) the applicant's reliance upon oral advice from USPTO employees; or (B) the USPTO's failure to advise the applicant of any deficiency in sufficient time to permit the applicant to take corrective action. See *In re Sivertz*, 227 USPQ 255, 256 (Comm'r Pat. 1985).

35 U.S.C. §133 and §151 each require a showing that the "delay" was "unavoidable," which requires not only a showing that the delay which resulted in the abandonment of the application was unavoidable, but also a showing of unavoidable delay until the filing of a petition to revive. See *In re Application of Takao*, 17 USPQ2d 1155 (Comm'r Pat. 1990).

The burden of continuing the process of presenting a grantable petition in a timely manner likewise remains with the applicant until the applicant is informed that the petition is granted. *Id.* at 1158. Thus, an applicant seeking to revive an "unavoidably" abandoned application must cause a petition under 37 C.F.R. §1.137(a) to be filed without delay (i.e., promptly upon becoming notified, or otherwise becoming aware, of the abandonment of the application).

> An applicant who fails to file a petition under 37 C.F.R. §1.137(a) "promptly" upon becoming notified, or otherwise becoming aware, of the abandonment of the application will not be able to show that the entire delay in filing the required reply from the due date for the reply until the filing of a grantable petition pursuant to 37 C.F.R. §1.137(a) was unavoidable. The removal of the language in 37 C.F.R. §1.137(a) requiring that any petition thereunder be "promptly filed after the applicant is notified of, or otherwise becomes aware of, the abandonment" should **not** be viewed as: (A) permitting an applicant, upon becoming notified, or otherwise becoming aware, of the abandonment of the application, to delay the filing of a petition under 37 C.F.R. §1.137(a); or (B) changing (or modifying) the result in *In re Application of S*, 8 USPQ2d 1630 (Comm'r Pat. 1988), in which a petition under 37 C.F.R. §1.137(a) was denied due to the applicant's deliberate deferral in filing a petition under 37 C.F.R. § 1.137. An applicant who deliberately chooses to delay the filing of a petition under 37 C.F.R. §1.137 (as in *Application of S*, 8 USPQ2d at 1632) will not be able to show that "the entire delay in filing the required reply from the due date for the reply until the filing of a grantable petition pursuant to [37 C.F.R. §1.137(a)] was unavoidable" or even make an appropriate statement that "the entire delay in filing the required reply from the due date for the reply until the filing of a grantable petition pursuant to [37 C.F.R. §1.137(b)] was unintentional."
>
> The dismissal or denial of a petition under 37 C.F.R. §1.137(a) does not preclude an applicant from obtaining relief pursuant to 37 C.F.R. 1. §137(b) on the basis of unintentional delay (unless the decision dismissing or denying the petition under 37 C.F.R. 1.137(a) indicates otherwise). In such an instance, a petition under 37 C.F.R. 1.137(b) may be filed accompanied by the fee set forth in 37 C.F.R. §1.17(m), the required reply, a statement that the entire delay in filing the required reply from the due date for the reply until the filing of a grantable petition pursuant to 37 C.F.R. §1.137(b) was unintentional, and any terminal disclaimer required by 37 C.F.R. §1.137(c). Form PTO/SB/61 or PTO/SB/61PCT may be used to file a petition for revival of an unavoidably abandoned application.
>
> ***

*Moreover, Petitioners' attentions always are directed to the guidance in the Commentary at MPEP §711.03(c ) as to the showing and other requirements regarding unintentional delay and a petition pursuant to 37 C.F.R. §1.137(b).*

The availability of applications and application papers online to applicants/practitioners who diligently associate their Customer Number with the respective application(s) now provides an applicant/practitioner on-demand information as to events/transactions in an application.

Out of an abundance of caution, Petitioners always are reminded that those registered to practice <u>and</u> all others who make representations before the Office **must** inquire into the underlying facts

of representations made to the Office and support averments with the appropriate documentation–since all owe to the Office the continuing duty to disclose.[1]

## STATUTES, REGULATIONS

Congress has authorized the Commissioner to "revive an application if the delay is shown to the satisfaction of the Commissioner to have been "unavoidable." 35 U.S.C. §133 (1994).

Decisions on reviving abandoned applications on the basis of "unavoidable" delay have adopted the reasonably prudent person standard in determining if the delay was unavoidable:

> The word 'unavoidable' . . . is applicable to ordinary human affairs, and requires no more or greater care or diligence than is generally used and observed by prudent and careful men in relation to their most important business. It permits them in the exercise of this care to rely upon the ordinary and trustworthy agencies of mail and telegraph, worthy and reliable employees, and such other means and instrumentalities as are usually employed in such important business. If unexpectedly, or through the unforeseen fault or imperfection of these agencies and instrumentalities, there occurs a failure, it may properly be said to be unavoidable, all other conditions of promptness in its rectification being present.[2]

**Again, Petitioners' attentions always are directed to the guidance in the Commentary at MPEP §711.03(c )(I) and/or (II).**

### As to Allegations of Unavoidable Delay

The requirements under 37 C.F.R. §1.137(a) are the petition and fee therefor, a reply, a proper showing of unavoidable delay under the regulation, and, where applicable, a terminal disclaimer and fee.

As of this writing Petitioner has failed to provide the required fee and support under the regulations for the allegation of unavoidable delay.

---

[1] See supplement of 17 June, 1999. The Patent and Trademark Office is relying on Petitioner's duty of candor and good faith and accepting a statement made by Petitioner. See Changes to Patent Practice and Procedure, 62 Fed. Reg. at 53160 and 53178, 1203 Off. Gaz. Pat. Office at 88 and 103 (responses to comments 64 and 109)(applicant obligated under 37 C.F.R. §10.18 to inquire into the underlying facts and circumstances when providing statements to the Patent and Trademark Office).

[2] In re Mattullath, 38 App. D.C. 497, 514-15 (1912)(quoting Ex parte Pratt, 1887 Dec. Comm'r Pat. 31, 32-33 (1887)); see also Winkler v. Ladd, 221 F. Supp. 550, 552, 138 USPQ 666, 167-68 (D.D.C. 1963), aff'd, 143 USPQ 172 (D.C. Cir. 1963); Ex parte Henrich, 1913 Dec. Comm'r Pat. 139, 141 (1913). In addition, decisions on revival are made on a "case-by-case basis, taking all the facts and circumstances into account." Smith v. Mossinghoff, 671 F.2d 533, 538, 213 USPQ 977, 982 (D.C. Cir. 1982). Finally, a petition cannot be granted where a petitioner has failed to meet his or her burden of establishing that the delay was "unavoidable." Haines v. Quigg, 673 F. Supp. 314, 316-17, 5 USPQ2d 1130, 1131-32 (N.D. Ind. 1987).

As to the Allegations
of Unintentional Delay

The requirements of a grantable petition pursuant to 37 C.F.R. §1.137(b) are the petition and fee therefor, a reply, a proper statement and/or showing of unintentional delay under the regulation, and, where applicable, a terminal disclaimer and fee

*It appears that Petitioner has not satisfied the statement/showing requirements pursuant to the regulations at 37 C.F.R. §1.137(b).*

## CONCLUSION

Accordingly, the petition under 37 C.F.R. §1.137(a) is **dismissed**; the petition pursuant to 37 C.F.R. §1.137(b) is **dismissed**.

Further correspondence with respect to this matter should be addressed as follows:

By Mail: Mail Stop PETITION
Commissioner for Patents
P. O. Box 1450
Alexandria, VA 22313-1450

By hand: U. S. Patent and Trademark Office
Customer Service Window, Mail Stop Petitions
Randolph Building
401 Dulany Street
Alexandria, VA 22314

By facsimile: **(571) 273-8300**
Attn: Office of Petitions

Telephone inquiries regarding this decision may be directed to the undersigned at (571) 272-3214—it is noted, however, that all practice before the Office is in writing (see: 37 C.F.R. §1.2[3]) and the proper authority for action on any matter in this regard are the statutes (35 U.S.C.), regulations (37 C.F.R.) and the commentary on policy (MPEP). Therefore, no telephone discussion may be controlling or considered authority for Petitioner's action(s).

/John J. Gillon, Jr./
John J. Gillon, Jr.
Senior Attorney
Office of Petitions

cc:
DAVID OLSEN
(510) 371-9648
3013 WOLSEY PL
FREEMONT, CA 94555

[3] The regulations at 37 C.F.R. §1.2 provide:
**§1.2 Business to be transacted in writing.**
All business with the Patent and Trademark Office should be transacted in writing. The personal attendance of applicants or their attorneys or agents at the Patent and Trademark Office is unnecessary. The action of the Patent and Trademark Office will be based exclusively on the written record in the Office. No attention will be paid to any alleged oral promise, stipulation, or understanding in relation to which there is disagreement or doubt.

UNITED STATES PATENT AND TRADEMARK OFFICE

Commissioner for Patents
United States Patent and Trademark Office
P.O. Box 1450
Alexandria, VA 22313-1450
www.uspto.gov

**KOPEL, PATRICK, HEYBL & DAWSON**
**2815 Townsgate Road**
**Suite 215**
**Westlake Village, CA 91361-5827**

MAILED

JUL 0 8 2009

OFFICE OF PETITIONS

| | | |
|---|---|---|
| In re Application of | : | |
| John A. Jelaco | : | |
| Application No. 10/953,316 | : | DECISION ON PETITION |
| Filed: September 28, 2004 | : | TO WITHDRAW |
| Attorney Docket No. 201-22-002 | : | FROM RECORD |
| | : | |

This is a decision on the Request to Withdraw as attorney or agent of record under 37 C.F.R. § 1.36(b), filed June 9, 2009.

The request is **APPROVED**.

A grantable request to withdraw as attorney/agent of record must be signed by every attorney/agent seeking to withdraw or contain a clear indication that one attorney is signing on behalf of another/others. A request to withdraw will not be approved unless at least 30 (thirty) days would remain between the date of approval and the later of the expiration date of a time to file a response or the expiration date of the maximum time period which can be extended under 37 C.F.R. § 1.136(a).

The request was signed by James K. Dawson on behalf of all attorneys of record. All attorneys/agents have been withdrawn. Applicant is reminded that there is no attorney of record at this time.

All future correspondence will be directed to the first named inventor John A. Jelaco at the address indicated below.

There is an outstanding Office action mailed April 2, 2009 that requires a reply from the applicant.

Telephone inquiries concerning this decision should be directed to Terri Williams at 571-272-2991.

Terri Williams

Terri Williams
Petitions Examiner
Office of Petitions

cc: **John A. Jelaco**
**6 Tucson**
**Coto de Caza, CA 92679**

cc: **John A. Jelaco**
**P.O. Box 80819**
**Rancho Sta Margarita, CA 92688**

UNITED STATES PATENT AND TRADEMARK OFFICE

UNITED STATES DEPARTMENT OF COMMERCE
United States Patent and Trademark Office
Address: COMMISSIONER FOR PATENTS
P.O. Box 1450
Alexandria, Virginia 22313-1450
www.uspto.gov

| APPLICATION NUMBER | FILING OR 371(C) DATE | FIRST NAMED APPLICANT | ATTY. DOCKET NO./TITLE |
|---|---|---|---|
| 10/953,316 | 09/28/2004 | John A. Jelaco | 201-22-002 |

**CONFIRMATION NO. 2297**

**POWER OF ATTORNEY NOTICE**

23935
KOPPEL, PATRICK, HEYBL & DAWSON
2815 Townsgate Road
SUITE 215
Westlake Village, CA 91361-5827

*OC000000036821721*

Date Mailed: 07/07/2009

## NOTICE REGARDING CHANGE OF POWER OF ATTORNEY

This is in response to the Power of Attorney filed 06/09/2009.

- The withdrawal as attorney in this application has been accepted. Future correspondence will be mailed to the new address of record. 37 CFR 1.33.

/tswilliams/

---

Office of Data Management, Application Assistance Unit (571) 272-4000, or (571) 272-4200, or 1-888-786-0101

UNITED STATES PATENT AND TRADEMARK OFFICE

COMMISSIONER FOR PATENTS
UNITED STATES PATENT AND TRADEMARK OFFICE
P.O. BOX 1450
ALEXANDRIA, VA 22313-1450
www.uspto.gov

WILLIAMS, MORGAN & AMERSON
10333 RICHMOND, SUITE 1100
HOUSTON, TX 77042

COPY MAILED
SEP 14 2006
OFFICE OF PETITIONS

| | | |
|---|---|---|
| In re Application of | : | |
| W. Thomas Balogh | : | |
| Application No. 10/953,330 | : | ON PETITION |
| Filed: September 29, 2004 | : | |
| Attorney Docket No. 3007.000400 | : | |

This is a decision on the petition under 37 CFR 1.313(c)(3), filed September 8, 2006, to withdraw the above-identified application from issue after payment of the issue fee.

The petition is **GRANTED**.

Petitioner requests that the application be withdrawn from issue for express abandonment. See 37 CFR 1.313(c)(3).

The above-identified application is expressly abandoned in favor of Application No. 11/518,542, a continuing application under 37 CFR 1.53(b) filed September 8, 2006.

Telephone inquiries should be directed to the undersigned at (571) 272-3204.

Sherry D. Brinkley
Petitions Examiner
Office of Petitions

UNITED STATES PATENT AND TRADEMARK OFFICE

Commissioner for Patents
United States Patent and Trademark Office
P.O. Box 1450
Alexandria, VA 22313-1450
www.uspto.gov

COPY MAILED
SEP 14 2006
OFFICE OF PETITIONS

Date : September 13, 2006

TO : Director, Office of Patent Publication

FROM : Office of the Deputy Commissioner for Patent Examination Policy

SUBJECT : Withdrawal from Issue of

Applicant(s) : W. Thomas Balogh
Application No. : 10/953,330
Filed : September 29, 2004

The above-identified application has been assigned Patent No. 7,107,844 and an issue date of September 19, 2006.

It is hereby directed that this application be withdrawn from issue at the request of the applicant.

Do not refund the issue fee.

The following erratum should be published in the Official Gazette if the above-identified application is published in the OG of September 19, 2006:

> "All reference to Patent No. 7,107,844 to W. THOMAS BALOGH of TEXAS for DIELECTRIC ACCELEROMETER appearing in the Official Gazette of September 19, 2006, should be deleted since no patent was granted."

Sherry D. Brinkley
Petitions Examiner
Office of Petitions

cc: Paul Harrison, Crystal Park 3-44l (FAX-306-2737)
Deneise Boyd, Crystal Park 2, Suite 1100 (FAX-308-5413)
Mary Louise McAskill, Crystal Park 3-910 (FAX 305-4372)
Niomi Farmer, Crystal Park 3-9l0 (FAX-305-4372)
Mary E. Johnson (Cookie), P/OCS, CM1-6D07
Duane K.Davis, P/OCS, CM1-6A07
Tamara K. Greene, PK3-910

UNITED STATES PATENT AND TRADEMARK OFFICE

Commissioner for Patents
United States Patent and Trademark Office
P.O. Box 1450
Alexandria, VA 22313-1450
www.uspto.gov

HUNTON & WILLIAMS LLP
1601 BRYAN STREET
ENERGY PLAZA - 30TH FLOOR
DALLAS TX 75201

COPY MAILED

JAN 26 2006

OFFICE OF PETITIONS

| | | |
|---|---|---|
| In re Application of | : | |
| Linda Gail Kincaid Price et al. | : | |
| Application No. 10/953,353 | : | DECISION ACCORDING |
| Filed: September 30, 2004 | : | STATUS UNDER |
| Attorney Docket No. | : | 37 CFR 1.47(a) |
| 85379.022048 | : | |

This is in response to the petition filed April 19, 2005 under 37 CFR 1.47(a).

The petition is **GRANTED**.

The above-identified application was filed on September 30, 2004, naming Linda Gail Kincaid Price, Max Hartwell Beasley III and Alfred L. Mayfield as joint inventors but without a signed declaration. Accordingly, on November 19, 2004, a "Notice To File Missing Parts of Application" was mailed, requiring a properly executed oath or declaration.

In response, an oath or declaration executed by joint inventors Price and Mayfield, a petition under 37 CFR 1.47(a) and a request for a three month extension of time was filed. The petition argues that joint inventor Beasley is unwilling to sign the oath or declaration and thus by his actions, to cooperate with the filing of the instant application.

A grantable petition under 37 CFR 1.47(a) requires: (1) proof that the non-signing inventor cannot be reached or refuses to sign the oath or declaration after having been presented with the application papers (specification, claims and drawings); (2) an acceptable oath or declaration in compliance with 35 U.S.C. §§ 115 and 116; (3) the petition fee; and (4) a statement of the last known address of the non-signing inventor.

The petition bears proof that the application papers were sent to Mr. Beasley on more than one occasion and that twice the certified mail was returned but not the correspondence sent by regular mail. The evidence submitted also shows that Mr. Beasley has not to date returned an executed oath or declaration.

The above-identified application and papers have been reviewed and found in compliance with 37 CFR 1.47(a). In view thereof, this application is hereby accorded Rule 1.47(a) status.

Thus, as provided in Rule 1.47c, this Office will forward notice of this application's filing to the non-signing inventor at the address given in the petition. Notice of the filing of this application will also be published in the Official Gazette.

Please be advised that effective November 22, 2004, the petition fee has been increased to $200.00. Therein, deposit account no. 50-0206 has been charged in the amount of $70.00 to make up the difference between that which was paid and that which is due pursuant to 37 CFR 1.17(g). See the Notice published in the Federal Register on September 21, 2004 and in the Official Gazette of the United States Patent and Trademark Office on October 12, 2004.

The application is being forwarded to Technology Center 2836 for examination in due course.

Telephone inquiries concerning this matter may be directed to the undersigned Petitions Attorney at (571) 272-3212.

Patricia Faison-Ball

Patricia Faison-Ball
Senior Petitions Attorney
Office of Petitions

UNITED STATES PATENT AND TRADEMARK OFFICE

UNITED STATES DEPARTMENT OF COMMERCE
United States Patent and Trademark Office
Address: COMMISSIONER FOR PATENTS
P.O. Box 1450
Alexandria, Virginia 22313-1450
www.uspto.gov

MINTZ, LEVIN, COHN, FERRIS, GLOVSKY AND POPEO, P.C
ONE FINANCIAL CENTER
BOSTON, MA 02111

Mail Date: 05/07/2010

| | | |
|---|---|---|
| **Applicant** | : Tuija Hurtta | : DECISION ON REQUEST FOR |
| **Patent Number** | : 7623530 | : RECALCULATION of PATENT |
| **Issue Date** | : 11/24/2009 | : TERM ADJUSTMENT IN VIEW |
| **Application No** | : 10/953,360 | : OF WYETH AND NOTICE OF INTENT TO |
| **Filed** | : 09/30/2004 | : ISSUE CERTIFICATE OF CORRECTION |
| | | : |

The Request for Recalculation is **GRANTED** to the extent indicated.

The patent term adjustment has been determined to be **1049** days. The USPTO will *sua sponte* issue a certificate of correction reflecting the amount of PTA days determined by the recalculation.

Prior to the issuance of the certificate of correction, the USPTO will afford patentee an opportunity to be heard and request reconsideration. Accordingly, patentee has **one month or thirty (30) days**, whichever is longer, to file a request for reconsideration of this patent term adjustment calculation. See 35 U.S.C. 154(b)(3)(B)(ii) and 37 CFR 1.322(a)(4). No extensions of time will be granted under 37 CFR 1.136.

Patentee should use document code PET.OP if electronically filing a request for reconsideration of this patent term adjustment calculation. The patentee must also include the information required by 37 CFR 1.705(b)(2) and the fee required by 37 CFR 1.18(e). If patentee does not file a timely request for reconsideration of this patent term adjustment calculation including the information required by 37 CFR 1.705(b)(2) and the fee required by 37 CFR 1.18(e), the USPTO will issue a certificate of correction reflecting the PTA determination noted above.

Patentee should be aware that in order to preserve the right to review in the United States District Court for the District of Columbia of the USPTO patent term adjustment determination, patentee must ensure that he or she also take the steps required under 35 U.S.C. 154(b)(4)(A) in a timely manner. Nothing in the request for recalculation should be construed as providing an alternative time frame for commencing a civil action under 35 U.S.C. 154(b)(4)(A).

Any questions concerning this decision should be directed to the Office of Patent Legal Administration at 571-272-7702.

UNITED STATES PATENT AND TRADEMARK OFFICE

UNITED STATES DEPARTMENT OF COMMERCE
United States Patent and Trademark Office
Address: COMMISSIONER FOR PATENTS
P.O. Box 1450
Alexandria, Virginia 22313-1450
www.uspto.gov

YAMAHA
C/O KEATING & BENNETT, LLP
1800 Alexander Bell Drive
SUITE 200
Reston, VA 20191

Mail Date: 04/20/2010

| | | |
|---|---|---|
| **Applicant** | : Osamu Maeda | : DECISION ON REQUEST FOR |
| **Patent Number** | : 7606374 | : RECALCULATION of PATENT |
| **Issue Date** | : 10/20/2009 | : TERM ADJUSTMENT IN VIEW |
| **Appliction No** | : 10/953,370 | : OF WYETH AND NOTICE OF INTENT TO |
| **Filed** | : 09/30/2004 | : ISSUE CERTIFICATE OF CORRECTION |
| | | : |

The Request for Recalculation is **GRANTED** to the extent indicated.

The patent term adjustment has been determined to be **1420** days. The USPTO will *sua sponte* issue a certificate of correction reflecting the amount of PTA days determined by the recalculation.

Prior to the issuance of the certificate of correction, the USPTO will afford patentee an opportunity to be heard and request reconsideration. Accordingly, patentee has **one month or thirty (30) days**, whichever is longer, to file a request for reconsideration of this patent term adjustment calculation. See 35 U.S.C. 154(b)(3)(B)(ii) and 37 CFR 1.322(a)(4). No extensions of time will be granted under 37 CFR 1.136.

Patentee should use document code PET.OP if electronically filing a request for reconsideration of this patent term adjustment calculation. The patentee must also include the information required by 37 CFR 1.705(b)(2) and the fee required by 37 CFR 1.18(e). If patentee does not file a timely request for reconsideration of this patent term adjustment calculation including the information required by 37 CFR 1.705(b)(2) and the fee required by 37 CFR 1.18(e), the USPTO will issue a certificate of correction reflecting the PTA determination noted above.

Patentee should be aware that in order to preserve the right to review in the United States District Court for the District of Columbia of the USPTO patent term adjustment determination, patentee must ensure that he or she also take the steps required under 35 U.S.C. 154(b)(4)(A) in a timely manner. Nothing in the request for recalculation should be construed as providing an alternative time frame for commencing a civil action under 35 U.S.C. 154(b)(4)(A).

Any questions concerning this decision should be directed to the Office of Patent Legal Administration at 571-272-7702.

UNITED STATES PATENT AND TRADEMARK OFFICE

Commissioner for Patents
United States Patent and Trademark Office
P.O. Box 1450
Alexandria, VA 22313-1450
www.uspto.gov

**VOLPE AND KOENIG, P.C.**
**DEPT. ICC**
**UNITED PLAZA, SUITE 1600**
**30 SOUTH 17TH STREET**
**PHILADELPHIA, PA 19103**

MAILED

NOV 16 2009

OFFICE OF PETITIONS

| | | |
|---|---|---|
| In re Application of | : | |
| **Guodong ZHANG**, et *al.* | : | |
| Application No. 10/953,375 | : | DECISION GRANTING PETITION |
| Filed: September 29, 2004 | : | UNDER 37 CFR 1.313(c)(2) |
| Attorney Docket No. **I-2-0732.1US** | : | |

This is a decision on the petition under 37 CFR 1.313(c)(2), filed November 13, 2009, to withdraw the above-identified application from issue after payment of the issue fee.

The petition is **GRANTED**.

The above-identified application is withdrawn from issue for consideration of a submission under 37 CFR 1.114 (request for continued examination). *See* 37 CFR 1.313(c)(2).

***Petitioner is advised that the issue fee paid on October 9, 2009 cannot be refunded. If, however, this application is again allowed, petitioner may request that it be applied towards the issue fee required by the new Notice of Allowance.***[1]

Telephone inquiries should be directed to the undersigned at (571) 272-7253.

This application is being referred to Technology Center AU 2416 for processing of the request for continued examination under 37 CFR 1.114 and for consideration of the concurrently filed information disclosure statement.

/Monica A. Graves/
Petitions Examiner, Office of Petitions

---

[1] *The request to apply the issue fee to the new Notice may be satisfied by completing and returning the new Part B – Fee(s) Transmittal Form (along with any balance due at the time of submission). Petitioner is advised that the Issue Fee Transmittal Form* ***must*** *be completed and timely submitted to avoid abandonment of the application.*

UNITED STATES PATENT AND TRADEMARK OFFICE

Commissioner for Patents
United States Patent and Trademark Office
P.O. Box 1450
Alexandria, VA 22313-1450
www.uspto.gov

| APPLICATION NUMBER | FILING/RECEIPT DATE | FIRST NAMED APPLICANT | ATTORNEY DOCKET NUMBER |
|---|---|---|---|
| 10/953405 | 09/29/2004 | Remignanti | 2550/A42 |

Steven G. Saunders
Bromberg & Sunstein LLP
125 Summer Street
Boston MA 02110-1618

DATE MAILED: November 29, 2004

# PETITION DECISION

Dear Applicant:

The petition for PG Pub replacement drawings received by the U. S. Patent and Trademark Office is **granted**. The drawings will be included for patent publication.

Telephone inquiries should be directed to The Office of Pre-Grant Publication at 703 605-4283.

Kalethia King

Signature of Reviewer, Office of Pre-Grant Publication

UNITED STATES PATENT AND TRADEMARK OFFICE

Commissioner for Patents
United States Patent and Trademark Office
P.O. Box 1450
Alexandria, VA 22313-1450
www.uspto.gov

Paper No.

INNOVATION PARTNERS
540 UNIVERSITY DRIVE
SUITE 300
PALO ALTO CA 94301

**COPY MAILED**

JAN 0 8 2007

**OFFICE OF PETITIONS**

| | | |
|---|---|---|
| In re Application of | : | |
| Armstrong et al. | : | DECISION ON |
| Application No. 10/953,408 | : | PETITION |
| Filed: September 29, 2004 | : | |
| Attorney Docket No. 1365 | : | |

This is a decision on the PETITION FOR REVIVAL OF AN APPLICATION FOR PATENT ABANDONED UNINTENTIONALLY UNDER 37 CFR 1.137(b), filed December 12, 2006.

The petition is **GRANTED**.

The above-identified application became abandoned for failure to pay the Issue Fee within three months of the mailing date, August 4, 2006, of the Notice of Allowance and Fee(s) Due. This Office action set a three-month nonextendable statutory period for reply. No reply having been received, the above-identified application became abandoned on November 5, 2006. A courtesy Notice of Abandonment was mailed on December 1, 2006.

The petition included the required reply[1] in the form of payment of the Issue Fee; payment of the petition fee set forth in 37 CFR § 1.17(m); and the required statement of unintentional delay. No terminal disclaimer is required.

The Office of Patent Publication has been advised of this decision. The application is, thereby, forwarded for processing into a patent.

---

[1] There was no distinct but concurrent requirement for new drawings or for payment of a Publication Fee.

Telephone inquiries related to this decision should be directed to the undersigned at (571) 272-3219.

Nancy Johnson
Senior Petitions Attorney
Office of Petitions

UNITED STATES PATENT AND TRADEMARK OFFICE

COMMISSIONER FOR PATENTS
UNITED STATES PATENT AND TRADEMARK OFFICE
P.O. BOX 1450
ALEXANDRIA, VA 22313-1450
www.uspto.gov

Brinks Hofer Gilson & Lione
P.O. Box 10395
Chicago, IL 60610

RECEIVED

DEC 22 2008

OFFICE OF PETITIONS

| | | |
|---|---|---|
| In re Application of | : | |
| Nam Yong Kong | : | |
| Application No. 10/953,433 | : | DECISION ON APPLICATION |
| Filed: 09/28/2004 | : | FOR PATENT TERM ADJUSTMENT |
| Patent No. 7,403,216 | : | |
| Issued: 07/22/2008 | : | |
| Atty Docket Number: 10125-4171 | : | |

This is a decision on the "Request for Reconsideration of Patent Term Adjustment," filed September 22, 2008. Patentee requests that the revised patent term adjustment indicated on the patent be corrected from three hundred five (305) days to six hundred three (603) days.

The request for reconsideration of patent term adjustment is **DISMISSED**.

Patentee is given **two (2) months** to respond to this decision. No extensions of time will be granted under 37 C.F.R. § 1.136.

On April 24, 2007, the above-identified application matured into U.S. Patent No. 7,218,485. The patent issued with a revised patent term adjustment of three hundred five (305) days.

The Office determined a patent term adjustment of three hundred five (305) days pursuant to 37 CFR 1.702(a)(1) for failure to mail a first Office action of Notice of Allowance more than 14 months after the actual filing date of the application. Specifically, the application was filed on September 28, 2004 (date of deposit by Express Mail). The Office mailed a first Office action on September 29, 2006, fourteen months and 305 days later.

Patentee contends that pursuant to 37 CFR 1.703(b) an additional period of adjustment of two hundred ninety-eight (298) days

should be entered. Patentee states that the present application was filed on September 28, 2004. Patentee states that the three (3) year date specified in 37 CFR 1.703(b) is September 28, 2007. The Office issued a patent for the present application on July 22, 2008. The difference between the three (3) year date and the date the patent issued is 298 days. As such, patentee concludes that the period of adjustment should be (305 + 298) 603 days.

It is acknowledged that the patent issued 3 years and 298 days after its actual filing date. Patentee is advised that any days of delay for Office issuance of the patent more than 3 years after the filing date of the application, which overlap with the days of patent term adjustment accorded prior to the issuance of the patent, will not result in any additional patent term adjustment. Further, in considering the overlap, the entire period during which the application was pending (except for periods excluded under 35 U.S.C. 154(b)(1)(B)(i)-(iii), and not just the period beginning three years after the actual filing date of the application, is the period of delay under 35 U.S.C. 154(b)(1)(B) in determining whether periods of delay overlap under 35 U.S.C. 154(b)(2)(A). See 35 U.S.C. 154(b) (1)(B); 35 U.S.C. 154(b)(2)(A); and 37 CFR 1.703(f). In this instance, the period of delay totaling 298 days attributable to the delay in the issuance of the patent overlaps with the adjustment of 305 attributable to grounds specified in § 1.702(a)(1). Thus, no additional period of adjustment was entered beyond the 305 days.

In view thereof, the patent correctly issued with a revised Patent Term Adjustment of three hundred five (305) days.

The Office acknowledges submission of the $200.00 fee set forth in 37 CFR 1.18(e). No additional fees are required.

Telephone inquiries specific to this matter should be directed to Attorney Derek L. Woods at (571) 272-3232.

Nancy Johnson
Senior Petitions Attorney
Office of Petitions

# UNITED STATES PATENT AND TRADEMARK OFFICE

**UNITED STATES DEPARTMENT OF COMMERCE**
**United States Patent and Trademark Office**
Address: COMMISSIONER FOR PATENTS
P.O. Box 1450
Alexandria, Virginia 22313-1450
www.uspto.gov

| APPLICATION NO. | FILING DATE | FIRST NAMED INVENTOR | ATTORNEY DOCKET NO. | CONFIRMATION NO. |
|---|---|---|---|---|
| 10/953,436 | 09/30/2004 | Mark M. Leather | 723-1574 | 1473 |

23117 7590 05/20/2008
NIXON & VANDERHYE, PC
901 NORTH GLEBE ROAD, 11TH FLOOR
ARLINGTON, VA 22203

| EXAMINER |
|---|
| CUNNINGHAM, GREGORY F |

| ART UNIT | PAPER NUMBER |
|---|---|
| 2628 | |

| MAIL DATE | DELIVERY MODE |
|---|---|
| 05/20/2008 | PAPER |

**Please find below and/or attached an Office communication concerning this application or proceeding.**

The time period for reply, if any, is set in the attached communication.

## SPE RESPONSE FOR CERTIFICATE OF CORRECTION

**Paper No**.:20080514

**DATE** : May 14, 2008

**TO SPE OF** : ART UNIT 2628

**SUBJECT** : Request for Certificate of Correction on Patent No.: 7,205,999

A response is requested with respect to the accompanying request for a certificate of correction.

Please complete this form and return with file, within **7** days to:
**Certificates of Correction Branch - ST (South Tower) 9A22**
Palm location **7590** - Tel. No. (703) 305-8309

With respect to the change(s) requested, correcting Office and/or Applicant's errors, should the patent read as shown in the certificate of correction? No new matter should be introduced, nor should the scope or meaning of the claims be changed.

**Thank You For Your Assistance** **Certificates of Correction Branch**

**The request for issuing the above-identified correction(s) is hereby:**

Note your decision on the appropriated box.

☒ **Approved** All changes apply.

☐ **Approved in Part** Specify below which changes **do not** apply.

☐ **Denied** State the reasons for denial below.

**Comments:**

**SPE:** /Matthew C. Bella/ Art Unit 2624

UNITED STATES PATENT AND TRADEMARK OFFICE

UNITED STATES DEPARTMENT OF COMMERCE
United States Patent and Trademark Office
Address: COMMISSIONER FOR PATENTS
P.O. Box 1450
Alexandria, Virginia 22313-1450
www.uspto.gov

| APPL NO. | FILING OR 371 (c) DATE | ART UNIT | FIL FEE REC'D | ATTY.DOCKET NO | DRAWINGS | TOT CLMS | IND CLMS |
|---|---|---|---|---|---|---|---|
| 10/953,439 | 09/28/2004 | 2173 | 2126 | 015358-009810US | 21 | 81 | 6 |

**CONFIRMATION NO. 1482**

**CORRECTED FILING RECEIPT**

*OC000000015023821*

20350
TOWNSEND AND TOWNSEND AND CREW, LLP
TWO EMBARCADERO CENTER
EIGHTH FLOOR
SAN FRANCISCO, CA 94111-3834

Date Mailed: 01/25/2005

Receipt is acknowledged of this regular Patent Application. It will be considered in its order and you will be notified as to the results of the examination. Be sure to provide the U.S. APPLICATION NUMBER, FILING DATE, NAME OF APPLICANT, and TITLE OF INVENTION when inquiring about this application. Fees transmitted by check or draft are subject to collection. Please verify the accuracy of the data presented on this receipt. **If an error is noted on this Filing Receipt, please write to the Office of Initial Patent Examination's Filing Receipt Corrections, facsimile number 703-746-9195. Please provide a copy of this Filing Receipt with the changes noted thereon. If you received a "Notice to File Missing Parts" for this application, please submit any corrections to this Filing Receipt with your reply to the Notice. When the USPTO processes the reply to the Notice, the USPTO will generate another Filing Receipt incorporating the requested corrections (if appropriate).**

**Applicant(s)**

Berna Erol, Cupertino, CA;
Jonathan J. Hull, San Carlos, CA;
Jamey Graham, San Jose, CA;
Dar-Shyang Lee, Union City, CA;
Peter E. Hart, Menlo Park, CA;

**Assignment For Published Patent Application**

Ricoh Company, Ltd., Tokyo, JAPAN

**Power of Attorney:** None

**Domestic Priority data as claimed by applicant**

**Foreign Applications**

**If Required, Foreign Filing License Granted:** 11/10/2004

**The country code and number of your priority application, to be used for filing abroad under the Paris Convention, is US10/953,439**

**Projected Publication Date:** Request for Non-Publication Acknowledged

**Non-Publication Request:** Yes

**Early Publication Request:** No

**Title**

Techniques for decoding and reconstructing media objects from a still visual representation

**Preliminary Class**

715

---

## LICENSE FOR FOREIGN FILING UNDER
## Title 35, United States Code, Section 184
## Title 37, Code of Federal Regulations, 5.11 & 5.15

**GRANTED**

The applicant has been granted a license under 35 U.S.C. 184, if the phrase "IF REQUIRED, FOREIGN FILING LICENSE GRANTED" followed by a date appears on this form. Such licenses are issued in all applications where the conditions for issuance of a license have been met, regardless of whether or not a license may be required as set forth in 37 CFR 5.15. The scope and limitations of this license are set forth in 37 CFR 5.15(a) unless an earlier license has been issued under 37 CFR 5.15(b). The license is subject to revocation upon written notification. The date indicated is the effective date of the license, unless an earlier license of similar scope has been granted under 37 CFR 5.13 or 5.14.

This license is to be retained by the licensee and may be used at any time on or after the effective date thereof unless it is revoked. This license is automatically transferred to any related applications(s) filed under 37 CFR 1.53(d). This license is not retroactive.

The grant of a license does not in any way lessen the responsibility of a licensee for the security of the subject matter as imposed by any Government contract or the provisions of existing laws relating to espionage and the national security or the export of technical data. Licensees should apprise themselves of current regulations especially with respect to certain countries, of other agencies, particularly the Office of Defense Trade Controls, Department of State (with respect to Arms, Munitions and Implements of War (22 CFR 121-128)); the Office of Export Administration, Department of Commerce (15 CFR 370.10 (j)); the Office of Foreign Assets Control, Department of Treasury (31 CFR Parts 500+) and the Department of Energy.

**NOT GRANTED**

No license under 35 U.S.C. 184 has been granted at this time, if the phrase "IF REQUIRED, FOREIGN FILING LICENSE GRANTED" DOES NOT appear on this form. Applicant may still petition for a license under 37 CFR 5.12, if a license is desired before the expiration of 6 months from the filing date of the application. If 6 months has lapsed from the filing date of this application and the licensee has not received any indication of a secrecy order under 35 U.S.C. 181, the licensee may foreign file the application pursuant to 37 CFR 5.15(b).

UNITED STATES PATENT AND TRADEMARK OFFICE

Commissioner for Patents
United States Patent and Trademark Office
P.O. Box 1450
Alexandria, VA 22313-1450
www.uspto.gov

COPY MAILED

AUG 03 2009

OFFICE OF PETITIONS

**KELLEY DRYE & WARREN LLP**
**400 ALTLANTIC STREET , 13TH FLOOR**
**STAMFORD CT 06901**

| | | |
|---|---|---|
| In re Application of | : | |
| **COTE,** William F. et al. | : | |
| Application No. 10/953,471 | : | DECISION ON PETITION |
| Filed: September 29, 2004 | : | TO WITHDRAW |
| Attorney Docket No. **NU-149(US)** | : | FROM RECORD |
| | : | |

This is a decision on the Request to Withdraw as attorney or agent of record under 37 C.F.R. § 1.36(b), filed June 18, 2009.

The request is **APPROVED**.

A grantable request to withdraw as attorney/agent of record must be signed by every attorney/agent seeking to withdraw or contain a clear indication that one attorney is signing on behalf of another/others. The Office requires the practitioner(s) requesting withdrawal to certify that he, she, or they have: (1) given reasonable notice to the client, prior to the expiration of the response period, that the practitioner(s) intends to withdraw from employment; (2) delivered to the client or a duly authorized representative of the client all papers and property (including funds) to which the client is entitled; and (3) notified the client of any responses that may be due and the time frame within which the client must respond, pursuant 37 CFR 10.40(c).

The request was signed by Marvin Wachs on behalf of all attorneys of record who are associated with customer No. 47670. All attorneys/agents associated with the Customer Number 47670 have been withdrawn. Applicant is reminded that there is no attorney of record at this time.

The request to change the correspondence address of record is not acceptable as the requested correspondence address is not that of: (1) the first named signing inventor; or (2) an intervening assignee of the entire interest under 37 C.F.R 3.71. All future communications from the Office will be directed to the first named signing inventor at the first copied address below until otherwise properly notified by the applicant.

There is an outstanding Office action mailed May 21, 2009 that requires a reply from the applicant.

Telephone inquiries concerning this decision should be directed to Tredelle Jackson at 571-272-2783.

Tredelle D. Jackson
Paralegal Specialist
Office of Petitions

cc: **WILLIAM F. COTE**
**534 LOWELL STREET**
**CARLISLE MA 01741**

cc: **WOLF GREENFIELD & SACKS, P.C.**
**600 ATLANTIC AVENUE**
**BOSTON, MA 02210-2206**

UNITED STATES PATENT AND TRADEMARK OFFICE

Commissioner for Patents
United States Patent and Trademark Office
P.O. Box 1450
Alexandria, VA 22313-1450
www.uspto.gov

**KELLEY DRYE & WARREN LLP**
**400 ALTLANTIC STREET, 13TH FLOOR**
**STAMFORD CT 06901**

COPY MAILED

AUG 03 2009

OFFICE OF PETITIONS

In re Application of
**FRANKEL,** Alan et al.
Application No. 10/953,474
Filed: September 29, 2004
Attorney Docket No. **018632.0074.NPUS01**

DECISION ON PETITION TO WITHDRAW FROM RECORD

This is a decision on the Request to Withdraw as attorney or agent of record under 37 C.F.R. § 1.36(b), filed June 18, 2009.

The request is **APPROVED**.

A grantable request to withdraw as attorney/agent of record must be signed by every attorney/agent seeking to withdraw or contain a clear indication that one attorney is signing on behalf of another/others. The Office requires the practitioner(s) requesting withdrawal to certify that he, she, or they have: (1) given reasonable notice to the client, prior to the expiration of the response period, that the practitioner(s) intends to withdraw from employment; (2) delivered to the client or a duly authorized representative of the client all papers and property (including funds) to which the client is entitled; and (3) notified the client of any responses that may be due and the time frame within which the client must respond, pursuant 37 CFR 10.40(c).

The request was signed by Marvin Wachs on behalf of all attorneys of record who are associated with customer No. 47670. All attorneys/agents associated with the Customer Number 47670 have been withdrawn. Applicant is reminded that there is no attorney of record at this time.

The request to change the correspondence address of record is not acceptable as the requested correspondence address is not that of: (1) the first named signing inventor; or (2) an intervening assignee of the entire interest under 37 C.F.R 3.71. All future communications from the Office will be directed to the first named signing inventor at the first copied address below until otherwise properly notified by the applicant.

Telephone inquiries concerning this decision should be directed to Tredelle Jackson at 571-272-2783.

Tredelle D. Jackson
Paralegal Specialist
Office of Petitions

cc: **ALAN FRANKEL**
**18 UPPER JOCLYN AVE.**
**FRAMINGHAM MA 01701**

cc: **WOLF GREENFIELD & SACKS, P.C.**
**600 ATLANTIC AVENUE**
**BOSTON, MA 02210-2206**

UNITED STATES PATENT AND TRADEMARK OFFICE

Commissioner for Patents
United States Patent and Trademark Office
P.O. Box 1450
Alexandria, VA 22313-1450
www.uspto.gov

LERNER, DAVID, LITTENBERG,
KRUMHOLZ & MENTLIK
600 SOUTH AVENUE WEST
WESTFIELD NJ 07090

COPY MAILED
DEC 17 2008

In re Application of :
Mathias Widman et al. : DECISION ON PETITION
Application No. 10/953,501 :
Filed: September 30, 2004 :
Attorney Docket Number: **VALEA3.9-037 CONT** :

This is a decision on the petition under 37 CFR 1.137(a), filed on October 27, 2008, to revive the above-identified application. This petition also pleads in the alternative under 37 CFR 1.137(b).

The petition under 37 CFR 1.137(a) is **DISMISSED**.
The petition under 37 CFR 1.137(b) is **GRANTED**.

This application became abandoned March 24, 2005 for failure to file a timely reply to the Notice to File Missing Parts mailed November 23, 2004. A response with a two month extension of time was filed on March 23, 2005 but was not complete. Thus a Notice of Incomplete Reply was mailed April 5, 2005. No response having been filed, a Notice of Abandonment was mailed June 14, 2007.

Petitioner asserts unavoidable delay in filing a response because of non-receipt of the Notice of Incomplete Reply mailed April 5, 2005. Further petitioner argues non-receipt of the Notice of Abandonment mailed June 14, 2007.

A grantable petition to revive an abandoned application under 37 CFR 1.137(a) must be accompanied by:

> (1) the required reply, unless previously filed. In a nonprovisional application abandoned for failure to prosecute, the required reply may be met by the filing of a continuing application. In a nonprovisional application filed on or after June 8, 1995, and abandoned for failure to prosecute, the required reply may also be met by the filing of a request for continued examination in compliance with § 1.114. In an application or patent, abandoned or lapsed for failure to pay the issue fee or any portion thereof, the required reply must be the payment of the

issue fee or any outstanding balance thereof;
(2) the petition fee as set forth in § 1.17(l);
(3) a showing to the satisfaction of the Commissioner that the entire delay in filing the required reply from the due date for the reply until the filing of a grantable petition pursuant to this paragraph was unavoidable; and
(4) any terminal disclaimer (and fee as set forth in § 1.20(d)) required pursuant to paragraph (c ) of this section.

This petition lacks item (3) above.

**SHOWING OF UNAVOIDABLE DELAY**

Decisions on reviving abandoned applications on the basis of "unavoidable" delay have adopted the reasonably prudent person standard in determining if the delay was unavoidable:

> The word 'unavoidable' . . . is applicable to ordinary human affairs, and requires no more or greater care or diligence than is generally used and observed by prudent and careful men in relation to their most important business. It permits them in the exercise of this care to rely upon the ordinary and trustworthy agencies of mail and telegraph, worthy and reliable employees, and such other means and instrumentalities as are usually employed in such important business. If unexpectedly, or through the unforeseen fault or imperfection of these agencies and instrumentalities, there occurs a failure, it may properly be said to be unavoidable, all other conditions of promptness in its rectification being present.[1]

The showing of record is inadequate to establish unavoidable delay within the meaning of 37 CFR 1.137(a). Specifically, an application is "unavoidably" abandoned only where petitioner, or counsel for petitioner, takes all action necessary for a proper response to the outstanding Office action, but through the intervention of unforeseen circumstances, such as failure or mail, telegraph, telefacsimile, or the negligence of otherwise reliable employees, the response is not timely received in the Office.[2]

The fees for treatment of the petitions under 37 CFR 1.137(a), $270, and under 37 CFR

---

[1] In re Mattullath, 38 App. D.C. 497, 514-15 (1912)(quoting Ex parte Pratt, 1887 Dec. Comm'r Pat. 31, 32-33 (1887)); see also Winkler v. Ladd, 221 F. Supp. 550, 552, 138 USPQ 666, 167-68 (D.D.C. 1963), aff'd, 143 USPQ 172 (D.C. Cir. 1963); Ex parte Henrich, 1913 Dec. Comm'r Pat. 139, 141 (1913). In addition, decisions on revival are made on a "case-by-case basis, taking all the facts and circumstances into account." Smith v. Mossinghoff, 671 F.2d 533, 538, 213 USPQ 977, 982 (D.C. Cir. 1982). Finally, a petition cannot be granted where a petitioner has failed to meet his or her burden of establishing that the delay was "unavoidable." Haines v. Quigg, 673 F. Supp. 314, 316-17, 5 USPQ2d 1130, 1131-32 (N.D. Ind. 1987).

[2] Ex parte Pratt, 1887 Dec. Comm'r Pat. 31 (Comm'r Pat. 1887).

1.137(b), $810, have been charged to petitioner's deposit account no. 12-1095.

Petitioner has not presented any evidence to establish unavoidable delay within the meaning of 35 U.S.C. § 133 and 37 CFR 1.137(a). The statements made by Steven Payne, the Attorney of Record at the time the Notices were mailed, without any additional evidence to corroborate non-receipt, are not enough to prove non-receipt. As such, petitioner has not proven non-receipt.

Alternatively, since petitioner argues unintentional delay, and since all other requirements under 37 CFR 1.137(b) have been met, this matter is being forwarded to the Office of Patent Application Processing for treatment of the response filed October 27, 2008 with the instant petition.

Telephone inquiries concerning this matter should be directed to the undersigned Petitions Attorney at (571) 272-3212.

Patricia Faison-Ball

Patricia Faison-Ball
Senior Petitions Attorney
Office of Petitions

UNITED STATES PATENT AND TRADEMARK OFFICE

UNITED STATES DEPARTMENT OF COMMERCE
United States Patent and Trademark Office
Address: COMMISSIONER FOR PATENTS
P.O. Box 1450
Alexandria, Virginia 22313-1450
www.uspto.gov

DAVID S. RESNICK
NIXON PEABODY LLP
100 SUMMER STREET
BOSTON, MA 02110-2131

Mail Date: 04/21/2010

| | | |
|---|---|---|
| **Applicant** | : Renzi Paolo | : DECISION ON REQUEST FOR |
| **Patent Number** | : 7579455 | : RECALCULATION of PATENT |
| **Issue Date** | : 08/25/2009 | : TERM ADJUSTMENT IN VIEW |
| **Appliction No** | : 10/953,512 | : OF WYETH AND NOTICE OF INTENT TO |
| **Filed** | : 09/29/2004 | : ISSUE CERTIFICATE OF CORRECTION |
| | | : |

The Request for Recalculation is **GRANTED** to the extent indicated.

The patent term adjustment has been determined to be **729** days. The USPTO will *sua sponte* issue a certificate of correction reflecting the amount of PTA days determined by the recalculation.

Prior to the issuance of the certificate of correction, the USPTO will afford patentee an opportunity to be heard and request reconsideration. Accordingly, patentee has **one month or thirty (30) days**, whichever is longer, to file a request for reconsideration of this patent term adjustment calculation. See 35 U.S.C. 154(b)(3)(B)(ii) and 37 CFR 1.322(a)(4). No extensions of time will be granted under 37 CFR 1.136.

Patentee should use document code PET.OP if electronically filing a request for reconsideration of this patent term adjustment calculation. The patentee must also include the information required by 37 CFR 1.705(b)(2) and the fee required by 37 CFR 1.18(e). If patentee does not file a timely request for reconsideration of this patent term adjustment calculation including the information required by 37 CFR 1.705(b)(2) and the fee required by 37 CFR 1.18(e), the USPTO will issue a certificate of correction reflecting the PTA determination noted above.

Patentee should be aware that in order to preserve the right to review in the United States District Court for the District of Columbia of the USPTO patent term adjustment determination, patentee must ensure that he or she also take the steps required under 35 U.S.C. 154(b)(4)(A) in a timely manner. Nothing in the request for recalculation should be construed as providing an alternative time frame for commencing a civil action under 35 U.S.C. 154(b)(4)(A).

Any questions concerning this decision should be directed to the Office of Patent Legal Administration at 571-272-7702.

**UNITED STATES DEPARTMENT OF COMMERCE**
**Patent and Trademark Office**
ASSISTANT SECRETARY OF COMMERCE AND
COMMISSIONER OF PATENTS AND TRADEMARKS
Washington, DC 20231

4/19/2010

Patent No. :7436830
Inventor(s) :Ben-Nun
Issued :10/14/2008
Title : METHOD AND APPARATUS FOR WIRE-SPEED APPLICATION LAYER CLASSIFICATION OF UPSTTREAM AND DOWNSTREAM DATA PACKETS
Atty.doc./File No.

Request for Certificates of Correction

Consideration has been given to your request for the issuance of a Certificate of Correction, for the above – identified patent under the provisions of CFR 1.322.

Inspection of the application for the patent reveals item [75] is printed in accordance with the record please show evidence of supporting data. Therefore being no fault on the Patent and Trademark Office, It has no authority to issue a certificate of correction under the provision of 1.322.

In view of the forgoing, your request in this matter, is hereby denied.

Future written correspondence concerning this matter should be filed and directed to Decisions & Certificates of Correction Branch.

Henry Randall
Decisions & Certificates
of Correction Branch
(703) 756-1571

ABELMAN FRAYNE & SCHWAB
666 THIRD AVENUE
NEW YORK, NY 10017-5621

HR

UNITED STATES PATENT AND TRADEMARK OFFICE

UNITED STATES DEPARTMENT OF COMMERCE
United States Patent and Trademark Office
Address: COMMISSIONER FOR PATENTS
P.O. Box 1450
Alexandria, Virginia 22313-1450
www.uspto.gov

SUGHRUE MION, PLLC
2100 PENNSYLVANIA AVENUE, N.W.
SUITE 800
WASHINGTON, DC 20037

Mail Date: 04/20/2010

| | | |
|---|---|---|
| **Applicant** | : Sung-hyu Han | : DECISION ON REQUEST FOR |
| **Patent Number** | : 7590865 | : RECALCULATION of PATENT |
| **Issue Date** | : 09/15/2009 | : TERM ADJUSTMENT IN VIEW |
| **Appliction No** | : 10/953,579 | : OF WYETH AND NOTICE OF INTENT TO |
| **Filed** | : 09/30/2004 | : ISSUE CERTIFICATE OF CORRECTION |
| | | : |

The Request for Recalculation is **GRANTED** to the extent indicated.

The patent term adjustment has been determined to be **1325** days. The USPTO will *sua sponte* issue a certificate of correction reflecting the amount of PTA days determined by the recalculation.

Prior to the issuance of the certificate of correction, the USPTO will afford patentee an opportunity to be heard and request reconsideration. Accordingly, patentee has **one month or thirty (30) days**, whichever is longer, to file a request for reconsideration of this patent term adjustment calculation. See 35 U.S.C. 154(b)(3)(B)(ii) and 37 CFR 1.322(a)(4). No extensions of time will be granted under 37 CFR 1.136.

Patentee should use document code PET.OP if electronically filing a request for reconsideration of this patent term adjustment calculation. The patentee must also include the information required by 37 CFR 1.705(b)(2) and the fee required by 37 CFR 1.18(e). If patentee does not file a timely request for reconsideration of this patent term adjustment calculation including the information required by 37 CFR 1.705(b)(2) and the fee required by 37 CFR 1.18(e), the USPTO will issue a certificate of correction reflecting the PTA determination noted above.

Patentee should be aware that in order to preserve the right to review in the United States District Court for the District of Columbia of the USPTO patent term adjustment determination, patentee must ensure that he or she also take the steps required under 35 U.S.C. 154(b)(4)(A) in a timely manner. Nothing in the request for recalculation should be construed as providing an alternative time frame for commencing a civil action under 35 U.S.C. 154(b)(4)(A).

Any questions concerning this decision should be directed to the Office of Patent Legal Administration at 571-272-7702.

UNITED STATES PATENT AND TRADEMARK OFFICE

UNITED STATES DEPARTMENT OF COMMERCE
United States Patent and Trademark Office
Address: COMMISSIONER FOR PATENTS
P.O. Box 1450
Alexandria, Virginia 22313-1450
www.uspto.gov

STOEL RIVES LLP - SLC
201 SOUTH MAIN STREET, SUITE 1100
ONE UTAH CENTER
SALT LAKE CITY, UT 84111

Mail Date: 04/21/2010

| | | |
|---|---|---|
| **Applicant** | : Scott Smith | : DECISION ON REQUEST FOR |
| **Patent Number** | : 7646107 | : RECALCULATION of PATENT |
| **Issue Date** | : 01/12/2010 | : TERM ADJUSTMENT IN VIEW |
| **Appliction No** | : 10/953,581 | : OF WYETH AND NOTICE OF INTENT TO |
| **Filed** | : 09/30/2004 | : ISSUE CERTIFICATE OF CORRECTION |
| | | : |

The Request for Recalculation is **GRANTED** to the extent indicated.

The patent term adjustment has been determined to be **1115** days. The USPTO will *sua sponte* issue a certificate of correction reflecting the amount of PTA days determined by the recalculation.

Prior to the issuance of the certificate of correction, the USPTO will afford patentee an opportunity to be heard and request reconsideration. Accordingly, patentee has **one month or thirty (30) days**, whichever is longer, to file a request for reconsideration of this patent term adjustment calculation. See 35 U.S.C. 154(b)(3)(B)(ii) and 37 CFR 1.322(a)(4). No extensions of time will be granted under 37 CFR 1.136.

Patentee should use document code PET.OP if electronically filing a request for reconsideration of this patent term adjustment calculation. The patentee must also include the information required by 37 CFR 1.705(b)(2) and the fee required by 37 CFR 1.18(e). If patentee does not file a timely request for reconsideration of this patent term adjustment calculation including the information required by 37 CFR 1.705(b)(2) and the fee required by 37 CFR 1.18(e), the USPTO will issue a certificate of correction reflecting the PTA determination noted above.

Patentee should be aware that in order to preserve the right to review in the United States District Court for the District of Columbia of the USPTO patent term adjustment determination, patentee must ensure that he or she also take the steps required under 35 U.S.C. 154(b)(4)(A) in a timely manner. Nothing in the request for recalculation should be construed as providing an alternative time frame for commencing a civil action under 35 U.S.C. 154(b)(4)(A).

Any questions concerning this decision should be directed to the Office of Patent Legal Administration at 571-272-7702.

UNITED STATES PATENT AND TRADEMARK OFFICE

COMMISSIONER FOR PATENTS
UNITED STATES PATENT AND TRADEMARK OFFICE
P.O. BOX 1450
ALEXANDRIA, VA 22313-1450
www.uspto.gov

ALSTON & BIRD, LLP
BANK OF AMERICA PLAZA
101 SOUTH TRYON STREET, SUITE 4000
CHARLOTTE, NC 28280-4000

**COPY MAILED**

SEP 27 2005

**OFFICE OF PETITIONS**

| | | |
|---|---|---|
| In re Application of | : | |
| Jorg Schreiber, et. al. | : | |
| Application No. 10/953,588 | : | DECISION GRANTING |
| Filed: September 28, 2004 | : | PETITION |
| Attorney Docket No. 104035.281812 | : | |

This is a decision on the petition filed August 29, 2005, requesting that the above-identified application be accorded a filing date of September 28, 2004, rather than the presently accorded date of September 29, 2004. The petition is properly treated as a petition under 37 CFR 1.10(c).

Petitioner requests the earlier filing date on the basis that the application was purportedly deposited with Express Mail Service on September 28, 2004 pursuant to 37 CFR 1.10. While the copy of the Express Mail label receipt No. EV 354292954 US bears a handwritten "date-in" of September 29, 2004 it also includes a USPS receipt date stamp of September 28, 2004. Petitioner is alleging that the date of mailing shown in the "date-in" is a U. S. Postal Service (USPS) error and the correct date of mailing pursuant to 37 CFR 1.10 is September 28, 2004. It is also noted that the Application Transmittal Letter contained the same Express Mail number and a statement of Express Mail under 37 CFR 1.10, dated September 28, 2004.

The Office considers the date the paper or fee is shown to have been deposited as "Express Mail" to be the "date-in" on the Express Mail label; MPEP 513. However, in view of the conflicting dates on the label, a search of the USPS' Express Mail Track and Confirm database was made and confirms that the package bearing Express Mail label No. EV 354292954 US was accepted on September 28, 2004.

In view of the above, the petition is **GRANTED**.

This application file is being referred to the Office of Initial Patent Examination (OIPE) for **correction of the filing date to September 28, 2004 and for issuance of a corrected filing receipt**.

Telephone inquiries relating to this decision should be directed to Andrea Smith at (571) 272-3226. Telephone inquiries related to OIPE processing should be directed to their hotline at (571) 272-4000.

Frances Hicks for
Brian Hearn
Petitions Examiner
Office of Petitions

UNITED STATES PATENT AND TRADEMARK OFFICE

UNITED STATES DEPARTMENT OF COMMERCE
United States Patent and Trademark Office
Address: COMMISSIONER FOR PATENTS
P.O. Box 1450
Alexandria, Virginia 22313-1450
www.uspto.gov

K&L Gates LLP
P.O. Box 1135
CHICAGO, IL 60690

Mail Date: 04/20/2010

| | | |
|---|---|---|
| **Applicant** | : Kelly D. Frizzell | : DECISION ON REQUEST FOR |
| **Patent Number** | : 7578735 | : RECALCULATION of PATENT |
| **Issue Date** | : 08/25/2009 | : TERM ADJUSTMENT IN VIEW |
| **Appliction No** | : 10/953,599 | : OF WYETH AND NOTICE OF INTENT TO |
| **Filed** | : 09/28/2004 | : ISSUE CERTIFICATE OF CORRECTION |
| | | : |

The Request for Recalculation is **GRANTED** to the extent indicated.

The patent term adjustment has been determined to be **494** days. The USPTO will *sua sponte* issue a certificate of correction reflecting the amount of PTA days determined by the recalculation.

Prior to the issuance of the certificate of correction, the USPTO will afford patentee an opportunity to be heard and request reconsideration. Accordingly, patentee has **one month or thirty (30) days**, whichever is longer, to file a request for reconsideration of this patent term adjustment calculation. See 35 U.S.C. 154(b)(3)(B)(ii) and 37 CFR 1.322(a)(4). No extensions of time will be granted under 37 CFR 1.136.

Patentee should use document code PET.OP if electronically filing a request for reconsideration of this patent term adjustment calculation. The patentee must also include the information required by 37 CFR 1.705(b)(2) and the fee required by 37 CFR 1.18(e). If patentee does not file a timely request for reconsideration of this patent term adjustment calculation including the information required by 37 CFR 1.705(b)(2) and the fee required by 37 CFR 1.18(e), the USPTO will issue a certificate of correction reflecting the PTA determination noted above.

Patentee should be aware that in order to preserve the right to review in the United States District Court for the District of Columbia of the USPTO patent term adjustment determination, patentee must ensure that he or she also take the steps required under 35 U.S.C. 154(b)(4)(A) in a timely manner. Nothing in the request for recalculation should be construed as providing an alternative time frame for commencing a civil action under 35 U.S.C. 154(b)(4)(A).

Any questions concerning this decision should be directed to the Office of Patent Legal Administration at 571-272-7702.

UNITED STATES PATENT AND TRADEMARK OFFICE

Commissioner for Patents
United States Patent and Trademark Office
P.O. Box 1450
Alexandria, VA 22313-1450
www.uspto.gov
DIW 01-05

JOHNSON & JOHNSON
ONE JOHNSON & JOHNSON PLAZA
NEW BRUNSWICK NJ 08933-70032ND FLOOR
ARLINGTON VA 22202

COPY MAILED

JAN 18 2005

OFFICE OF PETITIONS

| | | |
|---|---|---|
| In re Application of | : | |
| Huang et al. | : | |
| Application No. 10/953,613 | : | ON PETITION |
| Filed: 29 September, 2004 | : | |
| Attorney Docket No. CEN5038 | : | |

This is a decision on the petition under 37 CFR 1.182, filed on 6 December, 2004, to change the order of the names of the inventors.

The petition is **dismissed as moot**.

37 CFR 1.41(a)(1) now defines the inventorship of a non-provisional application as that inventorship set forth in the oath or declaration filed to comply with the requirements of 37 CFR 1.63.

The application was not filed with an executed oath or declaration, and no executed declaration has as of yet been filed. As such, no petition under 37 CFR 1.182 is necessary. The $400.00 petition fee is therefore unnecessary and will be refunded to counsel's Deposit Account, No. 10-0750.

The application file is being referred to the Office of Initial Patent Examination for further processing.

Telephone inquiries concerning this matter may be directed to the undersigned at (571) 272-3231.

DWood

Douglas I. Wood
Senior Petitions Attorney
Office of Petitions

UNITED STATES PATENT AND TRADEMARK OFFICE

Commissioner for Patents
United States Patent and Trademark Office
P.O. Box 1450
Alexandria, VA 22313-1450
www.uspto.gov

PHILIP S. JOHNSON
JOHNSON & JOHNSON
ONE JOHNSON & JOHNSON PLAZA
NEW BRUNSWICK NJ 08933-7003

MAILED

FEB 27 2009

OFFICE OF PETITIONS

| | | |
|---|---|---|
| In re Application of | : | |
| Huang, et al. | : | |
| Application No. 10/953,613 | : | DECISION |
| Filed/Deposited:30 September, 2004 | : | |
| Attorney Docket No. CEN5038NP | : | |

This is a decision on the petition, filed on 25 November, 2008, to revive under 37 C.F.R. §1.137(b) and alleging abandonment due to unintentional delay.

The petition under 37 C.F.R. §1.137(b) is **DISMISSED**.

Any request for reconsideration of this decision must be submitted within TWO (2) MONTHS from the mail date of this decision. Extensions of time under 37 CFR §1.136(a) are permitted. The reconsideration request should include a cover letter entitled "Renewed Petition under 37 CFR §1.137(b)."

This is **not** a final agency action within the meaning of 5 U.S.C. §704.

As to the Allegations
of Unintentional Delay

The requirements of a grantable petition pursuant to 37 C.F.R. §1.137(b) are the petition and fee therefor, a reply, a proper statement and/or showing of unintentional delay under the regulation, and, where applicable, a terminal disclaimer and fee. (It does not appear that a terminal disclaimer and fee are required here.)

**It appears that Petitioner has not satisfied the requirements of the regulation, to wit: The petition was filed without a proper reply in the form of an amendment; and due to the extended delay Petitioner must detail the basis of the delay that: led to the abandonment, occurred between the abandonment and the filing of the original petition, and occurred between the abandonment and the filing of a grantable petition.**

## BACKGROUND

The record reflects that:

Petitioner failed to reply timely and properly to the non-final Office action mailed on 6 November, 2006, with reply due absent an extension of time on or before 6 February, 2007.

The application went abandoned by operation of law after midnight 6 February, 2007.

The Office mailed the Notice of Abandonment on 11 June, 2007.

On 25 November, 2008, Petitioner filed, *inter alia*, a petition pursuant to 37 C.F.R. §1.137(b), with fee, however, at least the following deficiencies are apparent:

- The petition was filed without a proper reply in the form of an amendment; and
- Due to the extended delay Petitioner must detail the delay that led to the abandonment, the delay that occurred between the abandonment and the filing of the original petition, and the delay that occurred between the abandonment and the filing of a grantable petition.

In regard to these and other possible deficiencies, Petitioner's attention is drawn also to the guidance in the Commentary at MPEP §711.03(c )(II) (see: http://www.uspto.gov/web/offices/pac/mpep/documents/0700_711_03_c.htm#sect711.03c ) for satisfaction of the petition/fee/reply/statement-showing requirements under the rule.

The availability of applications and application papers online to applicants/practitioners who diligently associate their Customer Number with the respective application(s) now provides an applicant/practitioner on-demand information as to events/transactions in an application. Thus, now if one wishes to know the progress in and/or status of an application or the accuracy of the data therein, one need only look at the file online.

Out of an abundance of caution, Petitioners always are reminded that those registered to practice *and* all others who make representations before the Office must inquire into the underlying facts of representations made to the Office and support averments with the appropriate documentation–since all owe to the Office the continuing duty to disclose.[1]

---

[1] See supplement of 17 June, 1999. The Patent and Trademark Office is relying on petitioner's duty of candor and good faith and accepting a statement made by Petitioner. See Changes to Patent Practice and Procedure, 62 Fed. Reg. at 53160 and 53178, 1203 Off. Gaz. Pat. Office at 88

## STATUTES, REGULATIONS

Congress has authorized the Commissioner to "revive an application if the delay is shown to the satisfaction of the Commissioner to have been "unavoidable." 35 U.S.C. §133 (1994).

The regulations at 37 C.F.R. §1.137(a) and (b) set forth the requirements for a Petitioner to revive a previously unavoidably or unintentionally, respectively, abandoned application.[2],[3]

### As to Satisfaction of Requirements under the Rule

As indicated above, the requirements of a grantable petition pursuant to 37 C.F.R. §1.137(b) are the petition and fee therefor, a proper reply, a proper statement and/or showing of unintentional delay under the regulation, and, where applicable, a terminal disclaimer and fee.

As discussed above, it does not appear that Petitioner has satisfied the reply requirement under the rule as discussed above.

## CONCLUSION

The instant petition under 37 C.F.R. §1.137(b) is **dismissed**.

Further correspondence with respect to this matter should be addressed as follows:

By Mail: Mail Stop PETITION
Commissioner for Patents
P. O. Box 1450
Alexandria, VA 22313-1450

---

and 103 (responses to comments 64 and 109)(applicant obligated under 37 C.F.R. §10.18 to inquire into the underlying facts and circumstances when providing statements to the Patent and Trademark Office). See specifically, the regulations at 37 C.F.R. §10.18.

[2] See: Changes to Patent Practice and Procedure; Final Rule Notice, 62 Fed. Reg. at 53158-59 (October 10, 1997), 1203 Off. Gaz. Pat. Office at 86-87 (October 21, 1997).

[3] The language of 35 U.S.C. §133 and 37 C.F.R. §1.137(a) is clear, unambiguous, and without qualification: the delay in tendering the reply to the outstanding Office action, as well as filing the first petition seeking revival, must have been unavoidable for the reply now to be accepted on petition. (Therefore, by example, an unavoidable delay in the payment of the Filing Fee might occur if a reply is shipped by the US Postal Service, but due to catastrophic accident, the delivery is not made.) Delays in responding properly raise the question whether delays are unavoidable. Where there is a question whether the delay was unavoidable, Petitioners must meet the burden of establishing that the delay was unavoidable within the meaning of 35 U.S.C. §133 and 37 C.F.R. §1.137(a). And the Petitioner must be diligent in attending to the matter. Failure to do so does not constitute the care required under Pratt, and so cannot satisfy the test for diligence and due care. (By contrast, unintentional delays are those that do not satisfy the very strict statutory and regulatory requirements of unavoidable delay, and also, by definition, are not intentional.))

By hand: U. S. Patent and Trademark Office
Customer Service Window, Mail Stop Petitions
Randolph Building
401 Dulany Street
Alexandria, VA 22314

The centralized facsimile number is **(571) 273-8300.**

Telephone inquiries regarding this decision may be directed to the undersigned at (571) 272-3214—it is noted, however, that all practice before the Office is in writing (see: 37 C.F.R. §1.2[4]) and the proper authority for action on any matter in this regard are the statutes (35 U.S.C.), regulations (37 C.F.R.) and the commentary on policy (MPEP). Therefore, no telephone discussion may be controlling or considered authority for Petitioner's action(s).

/John J. Gillon, Jr./
John J. Gillon, Jr.
Senior Attorney
Office of Petitions

[4] The regulations at 37 C.F.R. §1.2 provide:
**§1.2 Business to be transacted in writing.**
All business with the Patent and Trademark Office should be transacted in writing. The personal attendance of applicants or their attorneys or agents at the Patent and Trademark Office is unnecessary. The action of the Patent and Trademark Office will be based exclusively on the written record in the Office. No attention will be paid to any alleged oral promise, stipulation, or understanding in relation to which there is disagreement or doubt.

UNITED STATES PATENT AND TRADEMARK OFFICE

Commissioner for Patents
United States Patent and Trademark Office
P.O. Box 1450
Alexandria, VA 22313-1450
www.uspto.gov

KATTEN MUCHIN ROSENMAN LLP
575 MADISON AVENUE
NEW YORK NY 10022-2585

COPY MAILED
NOV 07 2006
OFFICE OF PETITIONS

In re Application of :
Takeuchi, et al. :
Application No. 10/953,619 : ON PETITION
Filed: September 28, 2004 :
Attorney Docket No. FUJS 21.431 :
For: MICRO MIRROR UNIT AND ITS MANUFACTURING PROCESS, AND OPTICAL SWITCH WITH THE MICRO MIRROR UNIT EMPLOYED THEREIN

This is a decision on the petition under 37 CFR 1.181, filed August 24, 2006, to withdraw the holding of abandonment.

The petition under 37 CFR 1.181 is **GRANTED**.

The Office contended that the above-identified application became abandoned for failure to reply to the November 10, 2004 Notice to File Missing Parts of Nonprovisional Application, which set a two month extendable period for reply. No extensions of time or reply being received, the Office contended that this application became abandoned on January 11, 2005. The filing of the present petition precedes the mailing of A Notice of Abandonment.

Petitioners allege that the November 10, 2004 Notice was not received.

The showing required to establish non-receipt of an Office communication must include:

1. A statement from the practitioner stating that the Office communication was not received by the practitioner and attesting to the fact that a search of the file jacket and docket records indicates that the Office communication was not received.
2. A copy of the docket record where the non-received Office communication would have been entered had it been received and docketed must be attached to and referenced in practitioner's statement.[1]

[1] See notice entitled "Withdrawing the Holding of Abandonment When Office Actions Are Not Received," 1156 O.G. 53 (November 16, 1993).

Petitioners have submitted a copy of docket records showing all responses docketed for the above-identified application and all applications the firm handles from December 31, 2004 through January 20, 2005. Had the November 10, 2004 Notice been received, a response would have been listed on those records. In addition, practitioner referenced the records in the petition and stated that a review of the application's file jacket for the November 10, 2004 Notice was fruitless.

Petitioners have established non-receipt. The petition is **granted** and the holding of abandonment is withdrawn.

Petitioners filed a reply to the Notice to File Missing Parts of Nonprovisional Application with the present petition. Therefore, it is unnecessary to re-mail the correspondence and set a new period for response.

After the mailing of this decision, the application will be returned to the Office of Initial Patent Examination for further processing.

Telephone inquiries pertaining to this decision may be directed to the undersigned at (571) 272-3230.

Shirene Willis Brantley

Shirene Willis Brantley
Senior Petitions Attorney
Office of Petitions

UNITED STATES PATENT AND TRADEMARK OFFICE

Commissioner for Patents
United States Patent and Trademark Office
P.O. Box 1450
Alexandria, VA 22313-1450
www.uspto.gov

DAVIS, BROWN, KOEHN, SHORS & ROBERTS, P.C.
THE DAVIS BROWN TOWER
215 10TH STREET SUITE 1300
DES MOINES, IA 50309

COPY MAILED
NOV 05 2008

| | | |
|---|---|---|
| In re Application of | : | |
| Joan Smith-Sonneborn | : | |
| Application No. 10/953,637 | : | ON PETITION |
| Filed: September 29, 2004 | : | |
| Attorney Docket No. 8747200/14200 | : | |

This is a decision on the petition under the unintentional provisions of 37 CFR 1.137(b), filed August 25, 2008, to revive the above-identified application.

The petition is **GRANTED**.

The application became abandoned for failure to timely file a reply within the meaning of 37 CFR 1.113 to the final Office action of June 27, 2007. The proposed reply required for consideration of a petition to revive must be a Notice of Appeal (and appeal fee required by 37 CFR 41.20(b)(2), an amendment that *prima facie* places the application in condition for allowance, a Request for Continued Examination and submission (37 CFR 1.114), or the filing of a continuing application under 37 CFR 1.53(b). See MPEP 711.03(c)(III)(A)(2). A three (3) month extension of time pursuant to the provisions of 37 CFR 1.136(a) was obtained. Accordingly, the date of abandonment of this application is December 28, 2008.

The petition satisfies the requirements of 37 CFR 1.137(b) in that petitioner has supplied (1) the reply in the form of a Request for Continued Examination (RCE) and fee of $405.00, and the submission required by 37 CFR 1.114; (2) the petition fee of $770.00; and (3) a proper statement of unintentional delay.

It is not apparent whether the statement of unintentional delay was signed by a person who would have been in a position of knowing that the entire delay in filing the required reply from the due date for the reply until the filing of a grantable petition pursuant to 37 CFR 1.137(b) was unintentional. Nevertheless, in accordance with 37 CFR 10.18, the statement is accepted as

constituting a certification of unintentional delay. However, in the event that petitioner has no knowledge that the delay was unintentional, petitioner must make such an inquiry to ascertain that, in fact, the delay was unintentional. If petitioner discovers that the delay was intentional, petitioner must so notify the Office.

There is no indication that the person signing the instant petition was ever given a power of attorney or authorization of agent to prosecute the above-identified application. In accordance with 37 CFR 1.34(a), the signature appearing on the petition shall constitute a representation to the United States Patent and Trademark Office that he/she is authorized to represent the particular party in whose behalf he/she acts.

Telephone inquiries concerning this decision should be directed to JoAnne Burke at (571) 272-4584.

This application is being referred to Technology Center AU 1654 for processing of the RCE and for appropriate action by the Examiner in the normal course of business on the amendment submitted in accordance with 37 CFR 1.114.

Ramesh Krishnamurthy

Ramesh Krishnamurthy
Petitions Examiner
Office of Petitions

OIPE IAP/10
AUG 2 5 2008
PATENT & TRADEMARK OFFICE

1st DAC

PTO/SB/64 (08-08)
Approved for use through 08/31/2008. OMB 0651-0031
U.S. Patent and Trademark Office; U.S. DEPARTMENT OF COMMERCE
Under the Paperwork Reduction Act of 1995, no persons are required to respond to a collection of information unless it displays a valid OMB control number.

# PETITION FOR REVIVAL OF AN APPLICATION FOR PATENT ABANDONED UNINTENTIONALLY UNDER 37 CFR 1.137(b)

Docket Number (Optional)

First named inventor: Joan Smith-Sonneborn

Application No.: 10/953,637 Art Unit: 1654

Filed: 09/29/2004 Examiner: Julie Ha

Title: Use of Opiods in Prevention of and Recovery From a Stress-Induced Crash in Blood Pressure

Attention: Office of Petitions
**Mail Stop Petition**
Commissioner for Patents
P.O. Box 1450
Alexandria, VA 22313-1450
FAX (571) 273-8300

NOTE: If information or assistance is needed in completing this form, please contact Petitions Information at (571) 272-3282.

The above-identified application became abandoned for failure to file a timely and proper reply to a notice or action by the United States Patent and Trademark Office. The date of abandonment is the day after the expiration date of the period set for reply in the office notice or action plus an extensions of time actually obtained.

APPLICANT HEREBY PETITIONS FOR REVIVAL OF THIS APPLICATION

NOTE: A grantable petition requires the following items:
(1) Petition fee;
(2) Reply and/or issue fee;
(3) Terminal disclaimer with disclaimer fee - required for all utility and plant applications filed before June 8, 1995; and for all design applications; and
(4) Statement that the entire delay was unintentional.

1. Petition fee
☑ Small entity-fee $ 770.00 (37 CFR 1.17(m)). Applicant claims small entity status. See 37 CFR 1.27.

☐ Other than small entity – fee $ _____ (37 CFR 1.17(m))

2. Reply and/or fee
A. The reply and/or fee to the above-noted Office action in the form of Amendment and Request for Continued Examination (identify type of reply):

☐ has been filed previously on _____.
☑ is enclosed herewith.

B. The issue fee and publication fee (if applicable) of $ _____
☐ has been paid previously on _____.
☐ is enclosed herewith.

08/25/2008 MBLANCO 00000012 10953637
01 FC:2453 770.00 OP



This collection of information is required by 37 CFR 1.137(b). The information is required to obtain or retain a benefit by the public which is to file (and by the USPTO to process) an application. Confidentiality is governed by 35 U.S.C. 122 and 37 CFR 1.11 and 1.14. This collection is estimated to take 1.0 hour to complete, including gathering, preparing, and submitting the completed application form to the USPTO. Time will vary depending upon the individual case. Any comments on the amount of time you require to complete this form and/or suggestions for reducing this burden, should be sent to the Chief Information Officer, U.S. Patent and Trademark Office, U.S. Department of Commerce, P.O. Box 1450, Alexandria, VA 22313-1450. DO NOT SEND FEES OR COMPLETED FORMS TO THIS ADDRESS. **SEND TO: Mail Stop Petition, Commissioner for Patents, P.O. Box 1450, Alexandria, VA 22313-1450.**

*If you need assistance in completing the form, call 1-800-PTO-9199 and select option 2.*

Under the Paperwork Reduction Act of 1995, no persons are required to respond to a collection of information unless it displays a valid OMB control number.

3. Terminal disclaimer with disclaimer fee

☑ Since this utility/plant application was filed on or after June 8, 1995, no terminal disclaimer is required.

☐ A terminal disclaimer (and disclaimer fee (37 CFR 1.20(d)) of $ _____ for a small entity or $ _____ for other than a small entity) disclaiming the required period of time is enclosed herewith (see PTO/SB/63).

4. STATEMENT: The entire delay in filing the required reply from the due date for the required reply until the filing of a grantable petition under 37 CFR 1.137(b) was unintentional. [NOTE: The United States Patent and Trademark Office may require additional information if there is a question as to whether either the abandonment or the delay in filing a petition under 37 CFR 1.137(b) was unintentional (MPEP 711.03(c), subsections (III)(C) and (D)).]

**WARNING:**

Petitioner/applicant is cautioned to avoid submitting personal information in documents filed in a patent application that may contribute to identity theft. Personal information such as social security numbers, bank account numbers, or credit card numbers (other than a check or credit card authorization form PTO-2038 submitted for payment purposes) is never required by the USPTO to support a petition or an application. If this type of personal information is included in documents submitted to the USPTO, petitioners/applicants should consider redacting such personal information from the documents before submitting them to the USPTO. Petitioner/applicant is advised that the record of a patent application is available to the public after publication of the application (unless a non-publication request in compliance with 37 CFR 1.213(a) is made in the application) or issuance of a patent. Furthermore, the record from an abandoned application may also be available to the public if the application is referenced in a published application or an issued patent (see 37 CFR 1.14). Checks and credit card authorization forms PTO-2038 submitted for payment purposes are not retained in the application file and therefore are not publicly available.

| | |
|---|---|
| Emily Harris | 8/21/2008 |
| Signature | Date |
| Emily E. Harris | 56,201 |
| Typed or printed name | Registration Number, if applicable |
| 215 10th St., Ste. 1300 | 515-288-2500 |
| Address | Telephone Number |
| Des Moines, Iowa 50309 | |
| Address | |

Attorney is listed under Customer #

Enclosures:
- ☑ Fee Payment
- ☑ Reply
- ☐ Terminal Disclaimer Form
- ☐ Additional sheets containing statements establishing unintentional delay
- ☑ Other: Request for Continued Examination; Return Postcard; Check

CERTIFICATE OF MAILING OR TRANSMISSION [37 CFR 1.8(a)]

I hereby certify that this correspondence is being:

☒ Deposited with the United States Postal Service on the date shown below with sufficient postage as first class mail in an envelope addressed to: Mail Stop Petition, Commissioner for Patents, P. O. Box 1450, Alexandria, VA 22313-1450.

☐ Transmitted by facsimile on the date shown below to the United States Patent and Trademark Office at (571) 273-8300.

| | |
|---|---|
| 8/21/2008 | Patricia S. Law |
| Date | Signature |
| | Patricia S. Law |
| | Typed or printed name of person signing certificate |

# RAM Fee History Query

Revenue Accounting and Management

Name/Number: 10953637 Total Records Found: 9

Start Date: Any Date End Date: Any Date

| Accounting Date | Sequence Num. | Fee Type | Fee Code | Fee Amount | Mailroom Date | Payment Method |
|---|---|---|---|---|---|---|
| 08/25/2008 | 00000012 | 1 | 2453 | $770.00 | 08/25/2008 | CK |
| 08/25/2008 | 00000013 | 1 | 2801 | $405.00 | 08/25/2008 | CK |
| 01/02/2008 | 00000002 | 1 | 2253 | $525.00 | 12/31/2007 | CK |
| 05/08/2007 | 00000027 | 1 | 2251 | $60.00 | 05/07/2007 | CK |
| 03/05/2007 | 00000713 | 4 | 8021 | $40.00 | 03/05/2007 | DA 122250 |
| 02/18/2005 | 00000005 | 1 | 2051 | $65.00 | 02/17/2005 | CK |
| 02/18/2005 | 00000006 | 1 | 2203 | $180.00 | 02/17/2005 | CK |
| 10/04/2004 | 00000064 | 1 | 2001 | $385.00 | 09/29/2004 | CK |
| 10/04/2004 | 00000065 | 1 | 9998 | $10.00 | 09/29/2004 | CK |

# PALM INTRANET

## Customer's Attorney/Agent Search Result

Customer# 26386 Customer's Applications
DAVIS, BROWN, KOEHN, SHORS & ROBERTS, P.C.
THE DAVIS BROWN TOWER
215 10TH STREET SUITE 1300
DES MOINES, IA 50309

| Attorney/Agent Name | Attorney/Agent Registration Number | Attorney/Agent Telephone Number | Attorney/Agent Address |
|---|---|---|---|
| HERINK, KENT | 31025 Attorney's Applications | (515)288-2500 | DAVIS BROWN KOEHN SHORS AND ROBERTS PC<br>666 WALNUT ST STE 2500<br>THE FINANCIAL CTR<br>DES MOINES, IA 50309 |
| HARRIS, EMILY | 56201 Attorney's Applications | (515)288-2500 | DAVIS, BROWN, KOEHN, SHORS & ROBERTS, P.C.<br>666 WALNUT STREET, SUITE 2500<br>DES MOINES, IA 50309 |

Search Completed: No Records to Display.

**Search Another: Attorney/Agent/Customer**

**Registration#** [ ] Search **Customer#** [ ] Search

**Attorney's/Agent's Last Name** [ ] **First Name** [ ]

Search

To go back use Back button on your browser toolbar.

UNITED STATES PATENT AND TRADEMARK OFFICE

Commissioner for Patents
United States Patent and Trademark Office
P.O. Box 1450
Alexandria, VA 22313-1450
www.uspto.gov

MYERS BIGEL SIBLEY & SAJOVEC
PO BOX 37428
RALEIGH, NC 27627

COPY MAILED

MAR 24 2006

OFFICE OF PETITIONS

| | | |
|---|---|---|
| In re Application of | : | |
| J. Robert Zinter et al | : | |
| Application No. 10/953,646 | : | DECISION ON PETITION |
| Filed: September 29, 2004 | : | TO WITHDRAW |
| Attorney Docket No. 9390-7 | : | FROM RECORD |
| | : | |

This is a decision on the Request to Withdraw as attorney or agent of record under 37 C.F.R. § 1.36(b), filed February 9, 2006.

The request is **NOT APPROVED**.

A grantable request to withdraw as attorney/agent of record must be signed by every attorney/agent seeking to withdraw or contain a clear indication that one attorney is signing on behalf of another/others. A request to withdraw will not be approved unless at least 30 (thirty) days would remain between the date of approval and the later of the expiration date of a time to file a response or the expiration date of the maximum time period which can be extended under 37 C.F.R. § 1.136(a).

The Office cannot approve the request at this time since the reasons provided do not meet any of the conditions under the mandatory or permissive categories enumerated in 37 CFR 10.40. Section 10.40 of Title 37 of the Code of Federal Regulation states, "[a] practitioner shall not withdraw from employment in a proceeding before the Office without permission from the Office[.]" More specifically, 37 CFR 10.40 states, "[i]f paragraph (b) of this section is not applicable, a practitioner may not request permission to withdraw in matter pending before the Office unless such request or such withdrawal is" for one the permissive reasons listed in 37 CFR 10.40(c). The reasons set forth in the request, termination of client representation for this matter, do not appear to meet any the conditions set forth in 37 CFR 10.40.

All future communications from the Office will continue to be directed to the above-listed address until otherwise notified by applicant.

Telephone inquiries concerning this decision should be directed to Irvin Dingle at 571-272-3210.

Denise Pothier
Petitions Examiner
Office of Petitions

cc: The Law Office of Kenneth J. LuKacher
3136 Winton Road South, Suite 301
Rochester, NY 14623

UNITED STATES PATENT AND TRADEMARK OFFICE

Commissioner for Patents
United States Patent and Trademark Office
P.O. Box 1450
Alexandria, VA 22313-1450
www.uspto.gov

MYERS BIGEL SIBLEY & SAJOVEC
PO BOX 37428
RALEIGH, NC 27627

COPY MAILED

JUL 05 2006

OFFICE OF PETITIONS

| | | |
|---|---|---|
| In re Application of | : | |
| J. Robert Zinter et al | : | |
| Application No. 10/953,646 | : | DECISION ON PETITION |
| Filed: September 29, 2004 | : | TO WITHDRAW |
| Attorney Docket No. 9390-7 | : | FROM RECORD |
| | : | |

This is a decision on the Request to Withdraw as attorney or agent of record under 37 C.F.R. § 1.36(b), filed April 3, 2006.

The request is **NOT APPROVED**.

A grantable request to withdraw as attorney/agent of record must be signed by every attorney/agent seeking to withdraw or contain a clear indication that one attorney is signing on behalf of another/others. A request to withdraw will not be approved unless at least 30 (thirty) days would remain between the date of approval and the later of the expiration date of a time to file a response or the expiration date of the maximum time period which can be extended under 37 C.F.R. § 1.136(a).

The Office cannot approve the request at this time since the reasons provided do not meet any of the conditions under the mandatory or permissive categories enumerated in 37 CFR 10.40. Section 10.40 of Title 37 of the Code of Federal Regulation states, "[a] practitioner shall not withdraw from employment in a proceeding before the Office without permission from the Office[.]" More specifically, 37 CFR 10.40 states, "[i]f paragraph (b) of this section is not applicable, a practitioner may not request permission to withdraw in matter pending before the Office unless such request or such withdrawal is" for one the permissive reasons listed in 37 CFR 10.40(c). The reasons set forth in the request, termination of client representation for this matter, do not appear to meet any the conditions set forth in 37 CFR 10.40.

All future communications from the Office will continue to be directed to the above-listed address until otherwise notified by applicant.

Telephone inquiries concerning this decision should be directed to Irvin Dingle at 571-272-3210.

Denise Pothier
Petitions Examiner
Office of Petitions

cc: The Law Office of Kenneth J. LuKacher
3136 Winton Road South, Suite 301
Rochester, NY 14623

UNITED STATES PATENT AND TRADEMARK OFFICE

UNITED STATES DEPARTMENT OF COMMERCE
United States Patent and Trademark Office
Address: COMMISSIONER FOR PATENTS
P.O. Box 1450
Alexandria, Virginia 22313-1450
www.uspto.gov

KIMBERLY-CLARK WORLDWIDE, INC.
Tara Pohlkotte
2300 Winchester Rd.
NEENAH, WI 54956

Mail Date: 04/21/2010

| | | |
|---|---|---|
| **Applicant** | : Michael P. Mathis | : DECISION ON REQUEST FOR |
| **Patent Number** | : 7588034 | : RECALCULATION of PATENT |
| **Issue Date** | : 09/15/2009 | : TERM ADJUSTMENT IN VIEW |
| **Appliction No** | : 10/953,655 | : OF WYETH AND NOTICE OF INTENT TO |
| **Filed** | : 09/29/2004 | : ISSUE CERTIFICATE OF CORRECTION |
| | | : |

The Request for Recalculation is **GRANTED** to the extent indicated.

The patent term adjustment has been determined to be **314** days. The USPTO will *sua sponte* issue a certificate of correction reflecting the amount of PTA days determined by the recalculation.

Prior to the issuance of the certificate of correction, the USPTO will afford patentee an opportunity to be heard and request reconsideration. Accordingly, patentee has **one month or thirty (30) days**, whichever is longer, to file a request for reconsideration of this patent term adjustment calculation. See 35 U.S.C. 154(b)(3)(B)(ii) and 37 CFR 1.322(a)(4). No extensions of time will be granted under 37 CFR 1.136.

Patentee should use document code PET.OP if electronically filing a request for reconsideration of this patent term adjustment calculation. The patentee must also include the information required by 37 CFR 1.705(b)(2) and the fee required by 37 CFR 1.18(e). If patentee does not file a timely request for reconsideration of this patent term adjustment calculation including the information required by 37 CFR 1.705(b)(2) and the fee required by 37 CFR 1.18(e), the USPTO will issue a certificate of correction reflecting the PTA determination noted above.

Patentee should be aware that in order to preserve the right to review in the United States District Court for the District of Columbia of the USPTO patent term adjustment determination, patentee must ensure that he or she also take the steps required under 35 U.S.C. 154(b)(4)(A) in a timely manner. Nothing in the request for recalculation should be construed as providing an alternative time frame for commencing a civil action under 35 U.S.C. 154(b)(4)(A).

Any questions concerning this decision should be directed to the Office of Patent Legal Administration at 571-272-7702.

UNITED STATES PATENT AND TRADEMARK OFFICE

Commissioner for Patents
United States Patent and Trademark Office
P.O. Box 1450
Alexandria, VA 22313-1450
www.uspto.gov

**KOHN & ASSOCIATES, PLLC**
**30500 NORTHWESTERN HWY**
**STE 410**
**FARMINGTON HILLS MI 48334**

**COPY MAILED**

JUN 1 7 2008

**OFFICE OF PETITIONS**

In re Application of :
Daniel B. **RIFKIN**, et al. :
Application No. 10/953,658 : ON PETITION
Filed: September 29, 2004 :
Attorney Docket No. 3190.00022 :

This is a decision on the petition under 37 CFR 1.137(b), filed April 1, 2008, to revive the above-identified application.

The petition is **GRANTED**.

The above-identified application became abandoned for failure to reply within the meaning of 37 CFR 1.113 in a timely manner to the Final Office action mailed September 10, 2007, which set a shortened statutory period for reply of three (3) months. A two (2) month extension of time under the provisions of 37 CFR 1.136(a) was obtained on February 7, 2008. Accordingly, the above-identified application became abandoned on March 11, 2007.

The petition satisfies the conditions for revival pursuant to the provisions of 37 CFR 1.137(b) in that (1) the reply in the form of an amendment, Request for Continued Examination, and the $405 filing fee; (2) the petition fee of $770; and (3) the required statement of unintentional delay have been received. Accordingly, the reply to the Final Office action of September 10, 2007 is accepted as having been unintentionally delayed.

An extension of time under 37 CFR 1.136 must be filed prior to the expiration of the maximum extendable period for reply. See In re Application of S., 8 USPQ2d 1630, 1631 (Comm'r Pats. 1988). Since the $525 extension of time fee submitted with the petition on April 1, 2008 was subsequent to the maximum extendable period for reply, this fee is unnecessary and will be credited to petitioner's deposit account.

Telephone inquiries concerning this decision should be directed to Lori Baker Amerson at (571) 272-6051.

The application file is being referred to Technology Center AU 1633 for appropriate action on the concurrently filed Request for Continued Examination.

David Buccei
Petitions Examiner
Office of Petitions

UNITED STATES PATENT AND TRADEMARK OFFICE

UNITED STATES DEPARTMENT OF COMMERCE
United States Patent and Trademark Office
Address: COMMISSIONER FOR PATENTS
P.O. Box 1450
Alexandria, Virginia 22313-1450
www.uspto.gov

KIMBERLY-CLARK WORLDWIDE, INC.
Tara Pohlkotte
2300 Winchester Rd.
NEENAH, WI 54956

Mail Date: 04/21/2010

| | | |
|---|---|---|
| **Applicant** | : Paula C. Winkel | : DECISION ON REQUEST FOR |
| **Patent Number** | : 7654994 | : RECALCULATION of PATENT |
| **Issue Date** | : 02/02/2010 | : TERM ADJUSTMENT IN VIEW |
| **Appliction No** | : 10/953,660 | : OF WYETH AND NOTICE OF INTENT TO |
| **Filed** | : 09/28/2004 | : ISSUE CERTIFICATE OF CORRECTION |
| | | : |

The Request for Recalculation is **GRANTED** to the extent indicated.

The patent term adjustment has been determined to be **894** days. The USPTO will *sua sponte* issue a certificate of correction reflecting the amount of PTA days determined by the recalculation.

Prior to the issuance of the certificate of correction, the USPTO will afford patentee an opportunity to be heard and request reconsideration. Accordingly, patentee has **one month or thirty (30) days**, whichever is longer, to file a request for reconsideration of this patent term adjustment calculation. See 35 U.S.C. 154(b)(3)(B)(ii) and 37 CFR 1.322(a)(4). No extensions of time will be granted under 37 CFR 1.136.

Patentee should use document code PET.OP if electronically filing a request for reconsideration of this patent term adjustment calculation. The patentee must also include the information required by 37 CFR 1.705(b)(2) and the fee required by 37 CFR 1.18(e). If patentee does not file a timely request for reconsideration of this patent term adjustment calculation including the information required by 37 CFR 1.705(b)(2) and the fee required by 37 CFR 1.18(e), the USPTO will issue a certificate of correction reflecting the PTA determination noted above.

Patentee should be aware that in order to preserve the right to review in the United States District Court for the District of Columbia of the USPTO patent term adjustment determination, patentee must ensure that he or she also take the steps required under 35 U.S.C. 154(b)(4)(A) in a timely manner. Nothing in the request for recalculation should be construed as providing an alternative time frame for commencing a civil action under 35 U.S.C. 154(b)(4)(A).

Any questions concerning this decision should be directed to the Office of Patent Legal Administration at 571-272-7702.

UNITED STATES PATENT AND TRADEMARK OFFICE

Commissioner for Patents
United States Patent and Trademark Office
P.O. Box 1450
Alexandria, VA 22313-1450
www.uspto.gov

HENKEL CORPORATION
THE TRIAD, SUITE 200
2200 RENAISSANCE BLVD.
GULPH MILLS PA 19406

**COPY MAILED**

MAR 2 2 2005

**OFFICE OF PETITIONS**

In re Application of
Gandolphi & Pardal
Application No.: 10/953,666
Filed: September 28, 2004
Attorney Docket No.: H5313
For: MULTILAYER FILMS

DECISION REFUSING STATUS
UNDER 37 CFR 1.47(a)

This is a decision on the petition under 37 CFR 1.47(a), filed February 18, 2005 (certificate of mailing date February 16, 2005).

The petition is **DISMISSED**.

Any request for reconsideration of this decision must be submitted within TWO (2) MONTHS from the mail date of this decision. Extensions of time under 37 CFR 1.136(a) are permitted. Any response should be entitled "Request for Reconsideration of Petition Under 37 CFR 1.47(a)" and may include an oath or declaration executed by the inventor. **Failure to respond will result in abandonment of the application.**

The above-identified application was filed on September 28, 2004 without an executed oath or declaration. On January 3, 2005, a Notice to File Missing Parts of Nonprovisional Application was mailed. This Notice required petitioner to file an executed declaration and a surcharge for its late filing within two months of the January 3, 2005 mail date of the Notice. The instant petition was filed timely on February 18, 2005 (certificate of mailing date February 16, 2005).

A grantable petition under 37 CFR 1.47(a) requires

(1) a petition including proof of the pertinent facts establishing that the joint inventor(s) refuses to join, or cannot be found or reached after diligent effort,
(2) a proper oath or Declaration executed by the available joint inventor(s),
(3) the fee of $200, and
(4) the last known address of the omitted inventor(s).

This petition lacks item (1) above.

As to item (1), Applicant has failed to establish that the non-signing inventor, Carlos Gandolphi, cannot be located. The petition, signed by registered practitioner Stephen D. Harper, states that mail to Mr. Gandolphi's last known address was returned and a new address for Ms. Gandolphi has not been found. In addition, Mr. Gandolphi is no longer employed by the assignee of the present application.

A showing of **diligence** is critical in obtaining Rule 47 status when an inventor cannot be located or reached. One returned mailing does not meet the required level of diligence that must be shown in order to obtain Rule 47 status.

Petitioner should engage in further efforts to locate Mr. Gandolphi. The following is a list of evidentiary sources that are commonly relied upon to prove inability to locate an inventor: searches of Internet databases; inquiries of local telephone directories; telegrams; and documented inquiries of last known employers. Every listed type of search need not be done. However, a diligent effort to find the inventor must be made.

Documentary evidence that supports a finding that the non-signing inventor could not be found or reached should be made part of any affidavits or declarations that fully describe the exact facts which are relied on to establish that a diligent effort was made to locate the non-signing inventor. Printed computer records would suffice.

The affidavit or declaration of facts must be signed, where at all possible, by a person having *firsthand knowledge* of the facts recited therein. Statements based on hearsay will not normally be accepted. It is important that the affidavit or declaration contain statements of fact as opposed to conclusions.

Further correspondence with respect to this matter should be addressed as follows:

**By mail:** Mail Stop PETITION
Commissioner for Patents
Post Office Box 1450
Alexandria, VA 22313-1450

**By hand:** U.S. Patent and Trademark Office
Customer Service Window, Mail Stop Petition
Randolph Building
401 Dulany Street
Alexandria, VA 22314

**By FAX:** (703) 872-9306 – ATTN: Office of Petitions

Telephone inquiries should be directed to the undersigned at (571) 272-3230..

E Shirene Willis

E. Shirene Willis
Senior Petitions Attorney
Office of Petitions

UNITED STATES PATENT AND TRADEMARK OFFICE

Commissioner for Patents
United States Patent and Trademark Office
P.O. Box 1450
Alexandria, VA 22313-1450
www.uspto.gov

MERCHANT & GOULD (MICROSOFT)
P.O. BOX 2903
MINNEAPOLIS, MN 55402-0903

MAILED

NOV 16 2009

OFFICE OF PETITIONS

| | |
|---|---|
| In re Application of<br>Thomas G. Moore, et al.<br>Application No. 10/953,676<br>Filed: September 29, 2004<br>Attorney Docket No.<br>600001.0415US01/309463.01 | DECISION GRANTING PETITION<br>UNDER 37 CFR 1.313(c)(2) |

This is a decision on the petition under 37 CFR 1.313(c)(2), filed November 13, 2009, to withdraw the above-identified application from issue after payment of the issue fee.

The petition is **GRANTED**.

The above-identified application is withdrawn from issue for consideration of a submission under 37 CFR 1.114 (request for continued examination). *See* 37 CFR 1.313(c)(2).

***Petitioner is advised that the issue fee paid on October 19, 2009 cannot be refunded. If, however, this application is again allowed, petitioner may request that it be applied towards the issue fee required by the new Notice of Allowance.***[1]

Telephone inquiries regarding this decision should be directed to undersigned at (571) 272-1642. All other inquiries concerning the examination or status of this application should be directed to the Technology Center.

This application is being referred to Technology Center AU 2626 for processing of the request for continued examination under 37 CFR 1.114 and for consideration of the concurrently filed information disclosure statement.

/AMW/
April M. Wise
Petitions Examiner

---

[1] *The request to apply the issue fee to the new Notice may be satisfied by completing and returning the new Part B – Fee(s) Transmittal Form (along with any balance due at the time of submission). Petitioner is advised that the Issue Fee Transmittal Form* ***must*** *be completed and timely submitted to avoid abandonment of the application.*

UNITED STATES PATENT AND TRADEMARK OFFICE

UNITED STATES DEPARTMENT OF COMMERCE
United States Patent and Trademark Office
Address: COMMISSIONER FOR PATENTS
P.O. Box 1450
Alexandria, Virginia 22313-1450
www.uspto.gov

PEARNE & GORDON LLP
1801 EAST 9TH STREET
SUITE 1200
CLEVELAND, OH 44114-3108

Mail Date: 04/21/2010

| | | |
|---|---|---|
| **Applicant** | : Erich Dittli | : DECISION ON REQUEST FOR |
| **Patent Number** | : 7590256 | : RECALCULATION of PATENT |
| **Issue Date** | : 09/15/2009 | : TERM ADJUSTMENT IN VIEW |
| **Appliction No** | : 10/953,678 | : OF WYETH AND NOTICE OF INTENT TO |
| **Filed** | : 09/29/2004 | : ISSUE CERTIFICATE OF CORRECTION |
| | | : |

The Request for Recalculation is **GRANTED** to the extent indicated.

The patent term adjustment has been determined to be **1112** days. The USPTO will *sua sponte* issue a certificate of correction reflecting the amount of PTA days determined by the recalculation.

Prior to the issuance of the certificate of correction, the USPTO will afford patentee an opportunity to be heard and request reconsideration. Accordingly, patentee has **one month or thirty (30) days**, whichever is longer, to file a request for reconsideration of this patent term adjustment calculation. See 35 U.S.C. 154(b)(3)(B)(ii) and 37 CFR 1.322(a)(4). No extensions of time will be granted under 37 CFR 1.136.

Patentee should use document code PET.OP if electronically filing a request for reconsideration of this patent term adjustment calculation. The patentee must also include the information required by 37 CFR 1.705(b)(2) and the fee required by 37 CFR 1.18(e). If patentee does not file a timely request for reconsideration of this patent term adjustment calculation including the information required by 37 CFR 1.705(b)(2) and the fee required by 37 CFR 1.18(e), the USPTO will issue a certificate of correction reflecting the PTA determination noted above.

Patentee should be aware that in order to preserve the right to review in the United States District Court for the District of Columbia of the USPTO patent term adjustment determination, patentee must ensure that he or she also take the steps required under 35 U.S.C. 154(b)(4)(A) in a timely manner. Nothing in the request for recalculation should be construed as providing an alternative time frame for commencing a civil action under 35 U.S.C. 154(b)(4)(A).

Any questions concerning this decision should be directed to the Office of Patent Legal Administration at 571-272-7702.

UNITED STATES PATENT AND TRADEMARK OFFICE

UNITED STATES DEPARTMENT OF COMMERCE
United States Patent and Trademark Office
Address: COMMISSIONER FOR PATENTS
P.O. Box 1450
Alexandria, Virginia 22313-1450
www.uspto.gov

E I DU PONT DE NEMOURS AND COMPANY
LEGAL PATENT RECORDS CENTER
BARLEY MILL PLAZA 25/1122B
4417 LANCASTER PIKE
WILMINGTON, DE 19805

Mail Date: 04/20/2010

| | | |
|---|---|---|
| **Applicant** | : Steven Dale Ittel | : DECISION ON REQUEST FOR |
| **Patent Number** | : 7618704 | : RECALCULATION of PATENT |
| **Issue Date** | : 11/17/2009 | : TERM ADJUSTMENT IN VIEW |
| **Appliction No** | : 10/953,679 | : OF WYETH AND NOTICE OF INTENT TO |
| **Filed** | : 09/28/2004 | : ISSUE CERTIFICATE OF CORRECTION |
| | | : |

The Request for Recalculation is **GRANTED** to the extent indicated.

The patent term adjustment has been determined to be **1351** days. The USPTO will *sua sponte* issue a certificate of correction reflecting the amount of PTA days determined by the recalculation.

Prior to the issuance of the certificate of correction, the USPTO will afford patentee an opportunity to be heard and request reconsideration. Accordingly, patentee has **one month or thirty (30) days**, whichever is longer, to file a request for reconsideration of this patent term adjustment calculation. See 35 U.S.C. 154(b)(3)(B)(ii) and 37 CFR 1.322(a)(4). No extensions of time will be granted under 37 CFR 1.136.

Patentee should use document code PET.OP if electronically filing a request for reconsideration of this patent term adjustment calculation. The patentee must also include the information required by 37 CFR 1.705(b)(2) and the fee required by 37 CFR 1.18(e). If patentee does not file a timely request for reconsideration of this patent term adjustment calculation including the information required by 37 CFR 1.705(b)(2) and the fee required by 37 CFR 1.18(e), the USPTO will issue a certificate of correction reflecting the PTA determination noted above.

Patentee should be aware that in order to preserve the right to review in the United States District Court for the District of Columbia of the USPTO patent term adjustment determination, patentee must ensure that he or she also take the steps required under 35 U.S.C. 154(b)(4)(A) in a timely manner. Nothing in the request for recalculation should be construed as providing an alternative time frame for commencing a civil action under 35 U.S.C. 154(b)(4)(A).

Any questions concerning this decision should be directed to the Office of Patent Legal Administration at 571-272-7702.

UNITED STATES PATENT AND TRADEMARK OFFICE

Commissioner for Patents
United States Patent and Trademark Office
P.O. Box 1450
Alexandria, VA 22313-1450
www.uspto.gov

HARNESS, DICKEY & PIERCE, P.L.C.
P.O. BOX 828
BLOOMFIELD HILLS MI 48303

**COPY MAILED**

MAR 1 5 2007

**OFFICE OF PETITIONS**

| | | |
|---|---|---|
| In re Application of | : | |
| Sung Moon, et al. | : | |
| Application No. 10/953,696 | : | DECISION ON PETITION |
| Filed: September 29, 2004 | : | |
| Attorney Docket No. 9242-000050 | : | |

This is a decision on the petition under the unintentional provisions of 37 CFR 1.137(b), filed November 3, 2006, to revive the above-identified application.

The petition is **GRANTED**.

The application became abandoned for failure to reply in a timely manner to the non-final Office action mailed, January 5, 2006, which set a shortened statutory period for reply of three (3) months. No extensions of time under the provisions of 37 CFR 1.136(a) were obtained. Accordingly, the application became abandoned on April 6, 2006.

The petition satisfies the requirements of 37 CFR 1.137(b) in that petitioner has supplied (1) the reply in the form of an amendment with drawings, (2) the petition fee of $750; and (3) an adequate statement of unintentional delay.

Telephone inquiries concerning this decision should be directed to April Wise at (571) 272-1642.

This application is being referred to Technology Center AU 2875 for appropriate action by the Examiner in the normal course of business on the reply received.

Irvin Dingle
Petitions Examiner
Office of Petitions

UNITED STATES PATENT AND TRADEMARK OFFICE

Commissioner for Patents
United States Patent and Trademark Office
P.O. Box 1450
Alexandria, VA 22313-1450
www.uspto.gov

Date : March 25, 2008

Patent No. :7,268,349
Inventor(s) :Sung Moon et al.
Issued :September 11, 2007
Title :INFRARED ABSORPTION LAYER STRUCTURE AND ITS FORMATION METHOD, AND AN UNCOOLED INFRARED DETECTOR USING THIS STRUCTURE

Re: Request for Certificate of Correction

Consideration has been given your request for the issuance of a certificate of correction for the above-identified patent under the provisions of 37 CFR 1.322 and/or 1.323.

Assignees' names and addresses (assignment data) printed in a patent are based *solely* on information supplied in the appropriate space for identifying the assignment data, i.e., item 3 of the Fee(s) Transmittal Form PTOL-85B. After payment of the issue fee, correction of assignment data submitted on the PTOL-85B can only be done by Certificate of Correction under 37 CFR 1.323, with a request under 37 CFR 3.81(b).

A request for a patent to be corrected to state the name of the assignee must:

A. state that the assignment was submitted for recordation as set forth in 37 CFR 3.11 before issuance of the patent;

B. include a request for a certificate of correction under 37 CFR 1.323 along with the fee set forth in 37 CFR 1.20(a); and

C. include the processing fee set forth in 37 CFR 1.17(i).

If the request is granted, Certificates of Correction Branch will be notified that a Certificate of Correction may be issued.

See Manual of Patent Examining Procedure, Section 1481.01 (Rev. 3) (Oct. 2005).

*Applicant has not included items A and or C above, accordingly, the request for Certificate of Correction to add or change the assignee data is dismissed.*

Any request under 37 CFR 3.81(b) should be directed to the following address or facsimile number:

By mail: Mail Stop PETITIONS
Commissioner for Patents
Post Office Box 1450
Alexandria, VA 22313-1450

By hand: Customer Service Window
Randolph Building
401 Dulany Street
Alexandria, VA 22314

By fax: 571-273-8300
ATTN: Office of Petitions

If a fee (currently $100) was previously submitted for consideration of a Request for Certificate of Correction, under CFR 1.323, to correct assignment data, no additional fee is required.

Any inquiry concerning this communication should be directed to Ms. A. Green at (703) 308-9380 ext. 123.

**Mary Diggs, Supervisor**
Decisions & Certificates
of Correction Branch
(703) 308-9390 or (703) 308- 9380 ext. 123

Gregory Stobbs
Harness, Diceky & Peirce, PLC
P.O. Box 828
Bloomfield Hills, MI 48303

MD/ag

UNITED STATES PATENT AND TRADEMARK OFFICE

Commissioner for Patents
United States Patent and Trademark Office
P.O. Box 1450
Alexandria, VA 22313-1450
www.uspto.gov

**HARNESS, DICKEY & PIERCE, P.L.C.**
**P.O. BOX 828**
**BLOOMFIELD HILLS MI 48303**

**COPY MAILED**

SEP 19 2008

**OFFICE OF PETITIONS**

| | | |
|---|---|---|
| In re Patent No. 7,268,349 | : | |
| Application No. 10/953,696 | : | |
| Filed: September 29, 2004 | : | ON PETITION |
| Issued: September 11, 2007 | : | |
| Attorney Docket No. 9242-000050/US | : | |

This is a decision on the petition filed May 2, 2008, which is being treated as a request under 37 CFR 3.81(b)[1] to correct the name of the assignee on the front page of the above-identified patent by way of a Certificate of Correction.

The request is **GRANTED**.

The matter is being referred to the Certificates of Correction Branch for issuance of the requested Certificate of Correction.

Telephone inquiries concerning this decision may be directed to the undersigned at (571) 272-3206. Inquiries regarding the issuance of a certificate of correction should be directed to the Certificate of Correction Branch at (571) 272-4200.

Liana Walsh
Petitions Examiner
Office of Petitions

[1] *See* MPEP 1309, subsection II; and Official Gazette of June 22, 2004.

## SPE RESPONSE FOR CERTIFICATE OF CORRECTION

Paper No.: ___

DATE : 5/29/07

TO SPE OF : ART UNIT 3765

SUBJECT : Request for Certificate of Correction for Appl. No.: 10/953725 Patent No: 7117540 B2

A response is requested with respect to a request for a certificate of correction.

With respect to the change(s) requested to correct Office and/or Applicant's errors, should the patent read as shown in the certificate of correction attached herewith or the COCIN document(s), in IFW images for the above-identified patented application? No new matter should be introduced, nor should the scope or meaning of the claims be changed.

If the response is for an IFW, within **7** days, please complete and forward the response, to the employee (named below) via scanning into application images, using document code **COCX**.

If the response is for a paper file wrapper, please complete the response and forward the response with the paper file wrapper, to the employee (named below), within **7** days, to:

**Certificates of Correction Branch (CofC)**
**South Tower - 9A22**
**Palm Location 7580**

VIRGINIA TOLBERT
**Certificates of Correction Branch**
**703-308-9390 ext. 113**

**Thank You For Your Assistance**

**The request for issuing the above-identified correction(s) is hereby:**
Note your decision on the appropriate box.

- ☑ **Approved** — All changes apply.
- ☐ **Approved in Part** — Specify below which changes **do not** apply.
- ☐ **Denied** — State the reasons for denial below.

**Comments:** _____

SPE

3765
Art Unit

UNITED STATES PATENT AND TRADEMARK OFFICE

Commissioner for Patents
United States Patent and Trademark Office
P.O. Box 1450
Alexandria, VA 22313-1450
www.uspto.gov

WELSH & KATZ, LTD
120 S RIVERSIDE PLAZA
22ND FLOOR
CHICAGO, IL 60606

COPY MAILED
JUN 16 2008

| | | |
|---|---|---|
| In re Application of | : | |
| Yi-Ming Lee, et al. | : | |
| Application No. 10/953,730 | : | DECISION ON PETITION |
| Filed: September 29, 2004 | : | TO WITHDRAW |
| Attorney Docket No. 2461/92989 | : | FROM RECORD |
| | : | |

This is a decision on the Request to Withdraw as attorney or agent of record under 37 C.F.R. § 1.36(b), filed November 20, 2007.

The request is **DISMISSED** as moot.

A review of the file record indicates that the power of attorney to Welsh & Katz, LTD has been revoked by the assignee of the patent application on November 21, 2007. Accordingly, the request to withdraw under 37 C.F.R. § 1.36(b) is moot.

All future communications from the Office will continue to be directed to the below-listed address until otherwise notified by applicant.

Telephone inquires concerning this decision should be directed to undersigned at 571-272-1642.

April M. Wise
Petitions Examiner
Office of Petitions

cc: TAIWAN ADVANCE PATENT & TRADEMARK OFFICE
4F, NO. 410, SEC5, CHUNGHSIAO E. RD.
TAIPEI CITY TAIWAN
R.O.C.

UNITED STATES PATENT AND TRADEMARK OFFICE

UNITED STATES DEPARTMENT OF COMMERCE
United States Patent and Trademark Office
Address: COMMISSIONER FOR PATENTS
P.O. Box 1450
Alexandria, Virginia 22313-1450
www.uspto.gov

DUFT BORNSEN & FISHMAN, LLP
1526 SPRUCE STREET
SUITE 302
BOULDER, CO 80302

Mail Date: 05/03/2010

| | | |
|---|---|---|
| **Applicant** | : Amy L. Ng | : DECISION ON REQUEST FOR |
| **Patent Number** | : 7647022 | : RECALCULATION of PATENT |
| **Issue Date** | : 01/12/2010 | : TERM ADJUSTMENT IN VIEW |
| **Application No** | : 10/953,740 | : OF WYETH AND NOTICE OF INTENT TO |
| **Filed** | : 09/29/2004 | : ISSUE CERTIFICATE OF CORRECTION |
| | | : |

The Request for Recalculation is **GRANTED** to the extent indicated.

The patent term adjustment has been determined to be **880** days. The USPTO will *sua sponte* issue a certificate of correction reflecting the amount of PTA days determined by the recalculation.

Prior to the issuance of the certificate of correction, the USPTO will afford patentee an opportunity to be heard and request reconsideration. Accordingly, patentee has **one month or thirty (30) days**, whichever is longer, to file a request for reconsideration of this patent term adjustment calculation. See 35 U.S.C. 154(b)(3)(B)(ii) and 37 CFR 1.322(a)(4). No extensions of time will be granted under 37 CFR 1.136.

Patentee should use document code PET.OP if electronically filing a request for reconsideration of this patent term adjustment calculation. The patentee must also include the information required by 37 CFR 1.705(b)(2) and the fee required by 37 CFR 1.18(e). If patentee does not file a timely request for reconsideration of this patent term adjustment calculation including the information required by 37 CFR 1.705(b)(2) and the fee required by 37 CFR 1.18(e), the USPTO will issue a certificate of correction reflecting the PTA determination noted above.

Patentee should be aware that in order to preserve the right to review in the United States District Court for the District of Columbia of the USPTO patent term adjustment determination, patentee must ensure that he or she also take the steps required under 35 U.S.C. 154(b)(4)(A) in a timely manner. Nothing in the request for recalculation should be construed as providing an alternative time frame for commencing a civil action under 35 U.S.C. 154(b)(4)(A).

Any questions concerning this decision should be directed to the Office of Patent Legal Administration at 571-272-7702.

UNITED STATES PATENT AND TRADEMARK OFFICE

Commissioner for Patent
United States Patent and Trademark Office
P.O. Box 145
Alexandria, VA 22313-145
www.uspto.go

SEP 18 2005

KING & SPALDING LLP
191 PEACHTREE STREET, N.E.
45TH FLOOR
ATLANTA, GA 30303-1763

| | | |
|---|---|---|
| In re application of<br>Robert Anthony Love et al.<br>Application No. 10/953,754<br>Filed: September 29, 2004<br>For: VALUE TRACKING AND REPORTING OF AUTOMATED CLEARING HOUSE TRANSACTIONS | : | **DECISION ON PETITION TO MAKE SPECIAL (ACCELERATED EXAMINATION)** |

This is in response to the petition filed on August 5, 2005 to make the above-identified application special on the basis of special examining procedure for certain new applications - accelerated examination as set forth in MPEP § 708.02 VIII.

The requirements for granting special status under this section are: (A) a petition to make special accompanied by the fee set forth in 37 CFR 1.17(i); (B) all claims being directed to a single invention, or an election without traverse if the Office determines that all the claims are no directed to a single invention; (C) a statement that a pre-examination search was made listing the field of search; (D) one copy of each of the references deemed most closely related to the subject matter encompassed by the claims if said references are not already of record; and (E) a detailed discussion of how the claimed subject matter is patentable over the references in accordance with 37 CFR 1.111 (b) and (c).

Since all of the requirements for special status under MPEP § 708.02 VIII have been met, the petition is **GRANTED**.

The examiner is directed (1) to make an interference search for possible interfering applications, (2) to promptly examine this application out of turn, and (3) if any interfering application is discovered, to examine such application simultaneously and state in the first official letter of such application that it is being taken out of turn because of a possible interference.

Petitioner is advised that this application will continue to be special, throughout its entire prosecution and pendency, including interference or appeal, if any, only if petitioner makes a prompt ***bona fide*** effort, in response to each Office action, to place the application in condition for allowance, even if it is necessary to conduct an interview with the examiner to accomplish this purpose.

**SUMMARY**: Petition to Make Special **GRANTED.**

Randolph A Reese

Randolph A. Reese
Special Programs Examiner
Technology Center 3600
571-272-6619

RAR/dew: 08/23/05

UNITED STATES PATENT AND TRADEMARK OFFICE

COMMISSIONER FOR PATENTS
UNITED STATES PATENT AND TRADEMARK OFFICE
P.O. BOX 1450
ALEXANDRIA, VA 22313-1450
www.uspto.gov

MARK FARBER, ESQ.
U.S. SURGICAL
A DIVISION OF TYCO HEALTHCARE GROUP,
150 GLOVE AVENUE
NORWALK, CT 06856

COPY MAILED

APR 0 6 2006

OFFICE OF PETITIONS

| | | |
|---|---|---|
| In re Application of | : | |
| Sean T. Dycus, et al. | : | |
| Application No. 10/953,757 | : | ON PETITION |
| Filed: September 29, 2004 | : | |
| Attorney Docket No. 2906 CIP | : | |

This is a decision on the petition, filed March 30, 2006, under 37 CFR 1.313(a) to withdraw the above-identified application from issue.

The petition is **DISMISSED**.

37 CFR 1.313(a) states in part:

> "Applications may be withdrawn from issue for further action at the initiative of the Office or upon petition by the applicant. To request that the Office withdraw an application from issue, applicant must file a petition under this section including the fee set forth in 1.17(h) and a showing of good and sufficient reason why withdrawal of the application from issue is necessary.

As such, a grantable petition requesting withdrawal of an application from issue must be accompanied by: (1) a showing of good and sufficient reasons why withdrawal of the application from issue is necessary; and (2) the requisite petition fee under 37 CFR 1.17(h).

The petition includes the requisite petition fee. However, the petition does not set forth good and sufficient reasons as to why withdrawal of the application from issue is necessary. The mere resubmission of an information disclosure statement (IDS) with the petition does not make withdrawal of the application from issue necessary. There are other avenues open to applicant to have the IDS considered other than by way of a petition.

Following the part of 37 CFR 1.313(a) cited above, 37 CFR 1.313(a) goes on to state:

> "A petition under this section is not required if a request for continued examination under 1.114 is filed prior to payment of the issue fee."

The filing of a RCE under 37 CFR 1.114 with a submission and the fee set forth in 37 CFR 1.17(e) would have been a proper available option to have the IDS considered. It is well documented that an IDS satisfies the submission requirement under 37 CFR 1.114. For example, see MPEP 706.07(h)(II).

Accordingly, it is neither necessary nor proper to withdraw an application from issue under 37 CFR 1.313(a) for the examiner to consider an information disclosure statement submitted after allowance.

The application is being forwarded to the supervisory patent examiner for consideration of the information disclosure statement under 37 CFR 1.97(d).

It is noted that the address given on the petition differs from the address of record. If appropriate, a change of address should be filed in this case in accordance with MPEP 601.03. A courtesy copy of this decision is being mailed to the address noted on the petition. However, until otherwise instructed, all future correspondence regarding this application will be mailed solely to the address of record.

Telephone inquiries regarding this decision may be directed to the undersigned at (571) 272-3204.

Sherry D. Brinkley

Sherry D. Brinkley
Petitions Examiner
Office of Petitions

cc: EDWARD C. MEAGHER
CARTER, DELUCA, FARRELL & SCHMIDT, LLP
445 BROAD HOLLOW ROAD – SUITE 225
MELVILLE, NY 11747

UNITED STATES PATENT AND TRADEMARK OFFICE

Commissioner for Patents
United States Patent and Trademark Office
P.O. Box 1450
Alexandria, VA 22313-1450
www.uspto.gov

KENYON & KENYON LLP
1500 K STREET N.W.
SUITE 700
WASHINGTON DC 20005

**COPY MAILED**

MAR 3 1 2008

**OFFICE OF PETITIONS**

In re Application of
Akkary et al.
Application No. 10/953,761
Filed: September 30, 2004
Attorney Docket No. 2207/19386

DECISION ON PETITION

This is a decision on the petition under 37 CFR 1.182, filed, January 4, 2008, to correct the spelling of the name of inventor "Srinivasan T. Srikanth" to – Srikanth T. Srinivasan --.

The petition is **GRANTED**.

Office records have been corrected to reflect the correct spelling of the above-named inventor. A corrected Filing Receipt, which sets forth the correct spelling of the above-named inventor, accompanies this decision on petition.

As authorized, the $400 fee for the petition under 37 CFR 1.182 has been assessed to petitioner's deposit account.

Any questions concerning this matter may be directed to the undersigned at (571) 272-3215.

The matter is being referred to Art Unit 2183 for processing of the RCE and amendment in due course.

Charlema Grant

Charlema Grant
Petitions Attorney
Office of Petitions

ATTACHMENT: Corrected Filing Receipt

UNITED STATES PATENT AND TRADEMARK OFFICE

UNITED STATES DEPARTMENT OF COMMERCE
United States Patent and Trademark Office
Address: COMMISSIONER FOR PATENTS
P.O. Box 1450
Alexandria, Virginia 22313-1450
www.uspto.gov

| APPLICATION NUMBER | FILING or 371(c) DATE | GRP ART UNIT | FIL FEE REC'D | ATTY.DOCKET.NO | TOT CLAIMS | IND CLAIMS |
|---|---|---|---|---|---|---|
| 10/953,761 | 09/30/2004 | 2183 | 1114 | 2207/19386 | 19 | 7 |

**CONFIRMATION NO. 4402**

**CORRECTED FILING RECEIPT**

23838
KENYON & KENYON LLP
1500 K STREET N.W.
SUITE 700
WASHINGTON, DC 20005

*OC000000029170273*

Date Mailed: 03/31/2008

Receipt is acknowledged of this non-provisional patent application. The application will be taken up for examination in due course. Applicant will be notified as to the results of the examination. Any correspondence concerning the application must include the following identification information: the U.S. APPLICATION NUMBER, FILING DATE, NAME OF APPLICANT, and TITLE OF INVENTION. Fees transmitted by check or draft are subject to collection. Please verify the accuracy of the data presented on this receipt. **If an error is noted on this Filing Receipt, please write to the Office of Initial Patent Examination's Filing Receipt Corrections. Please provide a copy of this Filing Receipt with the changes noted thereon. If you received a "Notice to File Missing Parts" for this application, please submit any corrections to this Filing Receipt with your reply to the Notice. When the USPTO processes the reply to the Notice, the USPTO will generate another Filing Receipt incorporating the requested corrections**

**Applicant(s)**

Haitham Akkary, Portland, OR;
Ravi Rajwar, Portland, OR;
Srikanth T. Srinivasan, Portland, OR;

**Power of Attorney:** None

**Domestic Priority data as claimed by applicant**

**Foreign Applications**

**If Required, Foreign Filing License Granted:** 11/24/2004

The country code and number of your priority application, to be used for filing abroad under the Paris Convention, is **US 10/953,761**

**Projected Publication Date:** Not Applicable

**Non-Publication Request:** No

**Early Publication Request:** No

**Title**

Back-end renaming in a continual flow processor pipeline

**Preliminary Class**

712

## PROTECTING YOUR INVENTION OUTSIDE THE UNITED STATES

Since the rights granted by a U.S. patent extend only throughout the territory of the United States and have no effect in a foreign country, an inventor who wishes patent protection in another country must apply for a patent in a specific country or in regional patent offices. Applicants may wish to consider the filing of an international application under the Patent Cooperation Treaty (PCT). An international (PCT) application generally has the same effect as a regular national patent application in each PCT-member country. The PCT process **simplifies** the filing of patent applications on the same invention in member countries, but **does not result** in a grant of "an international patent" and does not eliminate the need of applicants to file additional documents and fees in countries where patent protection is desired.

Almost every country has its own patent law, and a person desiring a patent in a particular country must make an application for patent in that country in accordance with its particular laws. Since the laws of many countries differ in various respects from the patent law of the United States, applicants are advised to seek guidance from specific foreign countries to ensure that patent rights are not lost prematurely.

Applicants also are advised that in the case of inventions made in the United States, the Director of the USPTO must issue a license before applicants can apply for a patent in a foreign country. The filing of a U.S. patent application serves as a request for a foreign filing license. The application's filing receipt contains further information and guidance as to the status of applicant's license for foreign filing.

Applicants may wish to consult the USPTO booklet, "General Information Concerning Patents" (specifically, the section entitled "Treaties and Foreign Patents") for more information on timeframes and deadlines for filing foreign patent applications. The guide is available either by contacting the USPTO Contact Center at 800-786-9199, or it can be viewed on the USPTO website at http://www.uspto.gov/web/offices/pac/doc/general/index.html.

For information on preventing theft of your intellectual property (patents, trademarks and copyrights), you may wish to consult the U.S. Government website, http://www.stopfakes.gov. Part of a Department of Commerce initiative, this website includes self-help "toolkits" giving innovators guidance on how to protect intellectual property in specific countries such as China, Korea and Mexico. For questions regarding patent enforcement issues, applicants may call the U.S. Government hotline at 1-866-999-HALT (1-866-999-4158).

## LICENSE FOR FOREIGN FILING UNDER

## Title 35, United States Code, Section 184

## Title 37, Code of Federal Regulations, 5.11 & 5.15

**GRANTED**

The applicant has been granted a license under 35 U.S.C. 184, if the phrase "IF REQUIRED, FOREIGN FILING LICENSE GRANTED" followed by a date appears on this form. Such licenses are issued in all applications where the conditions for issuance of a license have been met, regardless of whether or not a license may be required as

set forth in 37 CFR 5.15. The scope and limitations of this license are set forth in 37 CFR 5.15(a) unless an earlier license has been issued under 37 CFR 5.15(b). The license is subject to revocation upon written notification. The date indicated is the effective date of the license, unless an earlier license of similar scope has been granted under 37 CFR 5.13 or 5.14.

This license is to be retained by the licensee and may be used at any time on or after the effective date thereof unless it is revoked. This license is automatically transferred to any related applications(s) filed under 37 CFR 1.53(d). This license is not retroactive.

The grant of a license does not in any way lessen the responsibility of a licensee for the security of the subject matter as imposed by any Government contract or the provisions of existing laws relating to espionage and the national security or the export of technical data. Licensees should apprise themselves of current regulations especially with respect to certain countries, of other agencies, particularly the Office of Defense Trade Controls, Department of State (with respect to Arms, Munitions and Implements of War (22 CFR 121-128)); the Bureau of Industry and Security, Department of Commerce (15 CFR parts 730-774); the Office of Foreign AssetsControl, Department of Treasury (31 CFR Parts 500+) and the Department of Energy.

**NOT GRANTED**

No license under 35 U.S.C. 184 has been granted at this time, if the phrase "IF REQUIRED, FOREIGN FILING LICENSE GRANTED" DOES NOT appear on this form. Applicant may still petition for a license under 37 CFR 5.12, if a license is desired before the expiration of 6 months from the filing date of the application. If 6 months has lapsed from the filing date of this application and the licensee has not received any indication of a secrecy order under 35 U.S.C. 181, the licensee may foreign file the application pursuant to 37 CFR 5.15(b).

UNITED STATES PATENT AND TRADEMARK OFFICE

Commissioner for Patents
United States Patent and Trademark Office
P.O. Box 1450
Alexandria, VA 22313-1450
www.uspto.gov

**LITMAN LAW OFFICES, LTD.**
**P.O. BOX 15035**
**CRYSTAL CITY STATION**
**ARLINGTON VA 22215**

**COPY MAILED**

APR 2 8 2008

**OFFICE OF PETITIONS**

| | | |
|---|---|---|
| In re Application of | : | |
| Joseph WANAMAKER | : | |
| Application No. 10/953,780 | : | DECISION ON PETITION |
| Filed: September 30, 2004 | : | |
| Attorney Docket No. **23021.00** | : | |

This is a decision on the petition under the unintentional provisions of 37 CFR 1.137(b), filed March 05, 2008, to revive the above-identified application.

The petition is **GRANTED**.

This application became abandoned for failure to timely pay the issue and publication fees on or before February 26, 2007, as required by the Notice of Allowance and Fee(s) Due, mailed November 24, 2006. Accordingly, the date of abandonment of this application is February 27, 2007.

The petition satisfies the requirements of 37 CFR 1.137(b) in that petitioner has supplied (1) the reply in the form of payment of the issue fee of $720 and the publication fee of $300, (2) the petition fee of $770; and (3) a proper statement of unintentional delay. Accordingly, the Issue Fee and the Publication Fee are accepted as having been unintentionally delayed

Telephone inquiries concerning this decision should be directed to Tredelle Jackson at (571) 272-2783.

This application is being referred to Publishing Division for processing into a patent.

David Bucci
Petitions Examiner
Office of Petitions

UNITED STATES PATENT AND TRADEMARK OFFICE

Commissioner for Patents
United States Patent and Trademark Office
P.O. Box 1450
Alexandria, VA 22313-1450
www.uspto.gov

BEMIS COMPANY, INC.
Patent and Trademark Department
2200 BADGER AVENUE
OSHKOSH WI 54904

COPY MAILED

DEC 19 2008

OFFICE OF PETITIONS

| | | |
|---|---|---|
| In re Application of: | : | |
| Nelson et al.[1] | : | |
| Application No. 10/953987 | : | DECISION DISMISSING |
| Filing or 371(c) Date: 09/29/2004 | : | PETITION UNDER |
| Attorney Docket Number: 20726 | : | 37 CFR § 1.183 |

This Decision is in response to the "Petition Under 37 C.F.R. § 1.47," filed December 1, 2008. The petition is properly treated as a renewed petition under 37 CFR 1.183, to waive the rules requiring the signature of all Inventors for a declaration of inventorship under 37 C.F.R. § 1.131.

The petition is **granted**.

The application as-filed identified four inventors: Kevin P. Nelson, Andrea M. Schnell, Richard R. Bellile and Christopher J. Harvey. Applicant filed a petition under 37 CFR 1.48(b) to delete inventors: Kevin P. Nelson, Andrea M. Schnell and Christopher J. Harvey.

Applicant filed a petition on July 24, 2008, to allow acceptance of a Declaration under 37 CFR 1.131, executed by Curwood, Inc., on behalf of inventor Bellile. In support of the petition, Applicant averred that inventor Bellile was sent a letter to inventor Bellile at his last known address requesting his review and signature of the Declaration under 37 CFR 1.131. A second letter was sent on July 16, 2008, but inventor Bellile refused to sign and return the document.

A review of the copy of the first letter sent to inventor Bellile reveals that the letter included a copy of the Declaration only. A review of the copy of the second letter sent to inventor revealed that it included a copy of "unedited pages from [his] Curwood laboratory notebook."

Applicant also included a copy of an Assignment executed by inventor Bellile to Curwood, Inc.

The petition was dismissed in a Decision mailed September 22, 2008. The Decision dismissing the petition required proof that the nonsigning inventor could not be found or reached after

[1] It is noted that Applicant has filed a petition to correct the inventorship in the present application; however, the petition has not been acted upon and the inventive entity thus remains as that originally filed.

diligent effort, or proof that the nonsigning inventor refused to execute the rule 131 declaration after having been presented with a copy of the application as amended.

The Decision also noted that the Declaration was signed by Attorney Tom Hall for Curwood, Inc; however, proof of Attorney Hall's authority to act on behalf of Curwood was required.

Finally, the Decision required proof of irreparable harm.

The present renewed petition

Petitioner files the present renewed petition includes proof that the nonsigning inventor refused to execute the rule 131 declaration after having been presented with a copy of the application as amended; proof of Attorney Hall's authority to act on behalf of Curwood, and proof of irreparable harm.

The MPEP 715.04, Swearing back of Reference, Affidavit or Declarant Under 37 CFR 1.131, provides in relevant part

> Where one or more of the named inventors of the subject matter of the rejected claim(s) (who had originally signed the oath or declaration for patent application under 37 CFR 1.63) is now unavailable to sign an affidavit or declaration under 37 CFR 1.131, the affidavit or declaration under 37 CFR 1.131 may be signed by the remaining joint inventors provided a petition under 37 CFR 1.183 requesting waiver of the signature of the unavailable inventor be submitted with the affidavit or declaration under 37 CFR 1.131. Proof that the non-signing inventor is unavailable or cannot be found similar to the proof required for a petition under 37 CFR 1.47 must be submitted with the petition under 37 CFR 1.183 (see MPEP § 409.03(d)). Petitions under 37 CFR 1.183 are decided by the Office of Petitions (see MPEP § 1002.02(b)).

This section states that a party qualified under 37 CFR 1.42, 1.43 or 1.47 may make the affidavit when it is not possible to produce the affidavit or declaration of the inventor, and that waiver of the signature requirement of the unavailable inventor may be demonstrated by proof similar to that required in a petition under 37 CFR 1.47. In discussing waiver requirements under 37 CFR 1.183, the Office is guided by proof similar to that required when an Applicant is unavailable. In this instance, Applicant asserts that the inventors refuse to join in the Declaration.

Analysis and Conclusion

The above-identified application and papers have been reviewed and found in compliance with 37 CFR 1.47(b).

Petitioner has shown that the non-signing inventor, Richard R. Bellile, refuses to execute the Declaration.

The petition is granted.

The application is being referred to Technology Center Art Unit 1794

- **for consideration of the petition to correct inventorship under 37 CFR 1.48(b),**

and for continued examination in due course.

Telephone inquiries concerning this matter should be directed to the undersigned at (571) 272-3232.

/Derek L. Woods/
Derek L. Woods
Attorney
Office of Petitions

UNITED STATES PATENT AND TRADEMARK OFFICE

Commissioner for Patents
United States Patent and Trademark Office
P.O. Box 1450
Alexandria, VA 22313-1450
www.uspto.gov

BEMIS COMPANY, INC.
Patent and Trademark Department
2200 BADGER AVENUE
OSHKOSH WI 54904

COPY MAILED

DEC 19 2008

OFFICE OF PETITIONS

| | | |
|---|---|---|
| In re Application of: | : | |
| Nelson et al.[1] | : | |
| Application No. 10/953987 | : | DECISION GRANTING |
| Filing or 371(c) Date: 09/29/2004 | : | PETITION UNDER |
| Attorney Docket Number: 20726 | : | 37 CFR § 1.183 |

This Decision is in response to the "Petition Under 37 C.F.R. § 1.47," filed December 1, 2008. The petition is properly treated as a renewed petition under 37 CFR 1.183, to waive the rules requiring the signature of all Inventors for a declaration of inventorship under 37 C.F.R. § 1.131.

The petition is **granted**.

The application as-filed identified four inventors: Kevin P. Nelson, Andrea M. Schnell, Richard R. Bellile and Christopher J. Harvey. Applicant filed a petition under 37 CFR 1.48(b) to delete inventors: Kevin P. Nelson, Andrea M. Schnell and Christopher J. Harvey.

Applicant filed a petition on July 24, 2008, to allow acceptance of a Declaration under 37 CFR 1.131, executed by Curwood, Inc., on behalf of inventor Bellile. In support of the petition, Applicant averred that inventor Bellile was sent a letter to inventor Bellile at his last known address requesting his review and signature of the Declaration under 37 CFR 1.131. A second letter was sent on July 16, 2008, but inventor Bellile refused to sign and return the document.

A review of the copy of the first letter sent to inventor Bellile reveals that the letter included a copy of the Declaration only. A review of the copy of the second letter sent to inventor revealed that it included a copy of "unedited pages from [his] Curwood laboratory notebook."

Applicant also included a copy of an Assignment executed by inventor Bellile to Curwood, Inc.

The petition was dismissed in a Decision mailed September 22, 2008. The Decision dismissing the petition required proof that the nonsigning inventor could not be found or reached after

[1] It is noted that Applicant has filed a petition to correct the inventorship in the present application; however, the petition has not been acted upon and the inventive entity thus remains as that originally filed.

diligent effort, or proof that the nonsigning inventor refused to execute the rule 131 declaration after having been presented with a copy of the application as amended.

The Decision also noted that the Declaration was signed by Attorney Tom Hall for Curwood, Inc; however, proof of Attorney Hall's authority to act on behalf of Curwood was required.

Finally, the Decision required proof of irreparable harm.

The present renewed petition

Petitioner files the present renewed petition includes proof that the nonsigning inventor refused to execute the rule 131 declaration after having been presented with a copy of the application as amended; proof of Attorney Hall's authority to act on behalf of Curwood, and proof of irreparable harm.

The MPEP 715.04, Swearing back of Reference, Affidavit or Declarant Under 37 CFR 1.131, provides in relevant part

> Where one or more of the named inventors of the subject matter of the rejected claim(s) (who had originally signed the oath or declaration for patent application under 37 CFR 1.63) is now unavailable to sign an affidavit or declaration under 37 CFR 1.131, the affidavit or declaration under 37 CFR 1.131 may be signed by the remaining joint inventors provided a petition under 37 CFR 1.183 requesting waiver of the signature of the unavailable inventor be submitted with the affidavit or declaration under 37 CFR 1.131. Proof that the non-signing inventor is unavailable or cannot be found similar to the proof required for a petition under 37 CFR 1.47 must be submitted with the petition under 37 CFR 1.183 (see MPEP § 409.03(d)). Petitions under 37 CFR 1.183 are decided by the Office of Petitions (see MPEP § 1002.02(b)).

This section states that a party qualified under 37 CFR 1.42, 1.43 or 1.47 may make the affidavit when it is not possible to produce the affidavit or declaration of the inventor, and that waiver of the signature requirement of the unavailable inventor may be demonstrated by proof similar to that required in a petition under 37 CFR 1.47. In discussing waiver requirements under 37 CFR 1.183, the Office is guided by proof similar to that required when an Applicant is unavailable. In this instance, Applicant asserts that the inventors refuse to join in the Declaration.

Analysis and Conclusion

The above-identified application and papers have been reviewed and found in compliance with 37 CFR 1.47(b).

Petitioner has shown that the non-signing inventor, Richard R. Bellile, refuses to execute the Declaration.

The petition is granted.

The application is being referred to Technology Center Art Unit 1794

- **for consideration of the petition to correct inventorship under 37 CFR 1.48(b),**

and for continued examination in due course.

Telephone inquiries concerning this matter should be directed to the undersigned at (571) 272-3232.

/Derek L. Woods/
Derek L. Woods
Attorney
Office of Petitions

UNITED STATES PATENT AND TRADEMARK OFFICE

UNITED STATES DEPARTMENT OF COMMERCE
United States Patent and Trademark Office
Address: COMMISSIONER FOR PATENTS
P.O. Box 1450
Alexandria, Virginia 22313-1450
www.uspto.gov

OBLON, SPIVAK, MCCLELLAND MAIER & NEUSTADT, L.L.P.
1940 DUKE STREET
ALEXANDRIA, VA 22314

Mail Date: 04/20/2010

| | | |
|---|---|---|
| **Applicant** | : Lee Chen | : DECISION ON REQUEST FOR |
| **Patent Number** | : 7584714 | : RECALCULATION of PATENT |
| **Issue Date** | : 09/08/2009 | : TERM ADJUSTMENT IN VIEW |
| **Appliction No** | : 10/953,791 | : OF WYETH AND NOTICE OF INTENT TO |
| **Filed** | : 09/30/2004 | : ISSUE CERTIFICATE OF CORRECTION |
| | | : |

The Request for Recalculation is **GRANTED** to the extent indicated.

The patent term adjustment has been determined to be **480** days. The USPTO will *sua sponte* issue a certificate of correction reflecting the amount of PTA days determined by the recalculation.

Prior to the issuance of the certificate of correction, the USPTO will afford patentee an opportunity to be heard and request reconsideration. Accordingly, patentee has **one month or thirty (30) days**, whichever is longer, to file a request for reconsideration of this patent term adjustment calculation. See 35 U.S.C. 154(b)(3)(B)(ii) and 37 CFR 1.322(a)(4). No extensions of time will be granted under 37 CFR 1.136.

Patentee should use document code PET.OP if electronically filing a request for reconsideration of this patent term adjustment calculation. The patentee must also include the information required by 37 CFR 1.705(b)(2) and the fee required by 37 CFR 1.18(e). If patentee does not file a timely request for reconsideration of this patent term adjustment calculation including the information required by 37 CFR 1.705(b)(2) and the fee required by 37 CFR 1.18(e), the USPTO will issue a certificate of correction reflecting the PTA determination noted above.

Patentee should be aware that in order to preserve the right to review in the United States District Court for the District of Columbia of the USPTO patent term adjustment determination, patentee must ensure that he or she also take the steps required under 35 U.S.C. 154(b)(4)(A) in a timely manner. Nothing in the request for recalculation should be construed as providing an alternative time frame for commencing a civil action under 35 U.S.C. 154(b)(4)(A).

Any questions concerning this decision should be directed to the Office of Patent Legal Administration at 571-272-7702.

UNITED STATES PATENT AND TRADEMARK OFFICE

Commissioner for Patents
United States Patent and Trademark Office
P.O. Box 1450
Alexandria, VA 22313-1450
www.uspto.gov

**COOLEY GODWARD KRONISH LLP**
**ATTN: PATENT GROUP,**
**SUITE 1100, 777 – 6TH STREET, NW**
**WASHINGTON DC 20001**

**COPY MAILED**

DEC 0 9 2008

**OFFICE OF PETITIONS**

| | | |
|---|---|---|
| In re Application of | : | |
| Oleg A. VYADRO, et al | : | |
| Application No. 10/953,799 | : | DECISION ON PETITION |
| Filed: September 29, 2004 | : | TO WITHDRAW |
| Attorney Docket No. IMME-001/00US308628-2025 | : | FROM RECORD |

This is a decision on the Request to Withdraw as attorney or agent of record under 37 C.F.R. § 1.36(b), filed October 21, 2008.

The request is **APPROVED**.

A grantable request to withdraw as attorney/agent of record must be signed by every attorney/agent seeking to withdraw or contain a clear indication that one attorney is signing on behalf of another/others. The Office requires the practitioner(s) requesting withdrawal to certify that he, she, or they have: (1) given reasonable notice to the client, prior to the expiration of the response period, that the practitioner(s) intends to withdraw from employment; (2) delivered to the client or a duly authorized representative of the client all papers and property (including funds) to which the client is entitled; and (3) notified the client of any responses that may be due and the time frame within which the client must respond, pursuant 37 CFR 10.40(c).

The request was signed by Robert J. Tosti on behalf of the attorneys of record associated with Customer No. 58249.

The attorneys of record associated with Customer No. 58249 have been withdrawn.

Applicant is reminded that there is no attorney of record at this time.

The correspondence address of record has been changed and the new correspondence address is the address indicated below until otherwise properly notified by the applicant.

Telephone inquiries concerning this decision should be directed to the undersigned at 571-272-6735.

Diane Goodwyn
Petitions Examiner
Office of Petitions

cc: OLEG A. VYADRO
56 TANGLEWOOD ROAD
NEWTON, MA 02459

UNITED STATES PATENT AND TRADEMARK OFFICE

COMMISSIONER FOR PATENTS
UNITED STATES PATENT AND TRADEMARK OFFICE
P.O. BOX 1450
ALEXANDRIA, VA 22313-1450
WWW.USPTO.GOV

Paper No. None

FENWICK & WEST LLP
SILICON VALLEY CENTER
801 CALIFORNIA STREET
MOUNTAIN VIEW CA 94041

COPY MAILED
MAR 16 2006
OFFICE OF PETITIONS

| | | |
|---|---|---|
| In re Application of | : | |
| Kangle Yang et al. | : | |
| Application No. 10/953,810 | : | DECISION ON PETITION |
| Filed: September 28, 2004 | : | UNDER 37 C.F.R. §1.137(f) |
| Attorney Docket No. 23876-09335 | : | |
| Title: SETTLEMENT OF AUCTIONS | : | |
| BY DETERMINING QUANTITY BEFORE | : | |
| PRICE | : | |

This is a decision on the petition filed on January 17, 2006, pursuant to 37 C.F.R. §1.137(f), to revive the above-identified application.

A grantable petition pursuant to 37 CFR 1.137(f) must be accompanied by:

(1) Notification of the filing of an application in a foreign country or under a multinational treaty that requires 18 month publication[1];
(2) The petition fee as set forth in 37 C.F.R. § 1.17(m), and;
(3) A statement that the entire delay in filing the notice from the date that the notice was due under 35 U.S.C. §122(b)(2)(B)(iii) until the date the notice was filed was unintentional. The Commissioner may require additional information where there is a question whether the delay was unintentional.

1 See PTO/SB/36 and paragraph on PTO/SB/64a for further information. Both may be downloaded at http://www.uspto.gov/web/forms/index.html.

Petitioner states that the present nonprovisional application is the subject of an application filed in either a foreign or an international application on November 11, 2004. However, the United States Patent and Trademark Office was unintentionally not notified of this filing within 45 days subsequent to the filing of the subject application in either an international application or a foreign country.

Unfortunately, it does not appear that a Notice of Rescission of Nonpublication Request has been filed with the Office. As such, Petitioner has not rescinded the previous nonpublication request.

Accordingly, the petition under 37 C.F.R. §1.137(f) must be **DISMISSED.**

Any response must be submitted within **TWO (2) MONTHS** from the mail date of this decision. Extensions of time under 37 CFR 1.136(a) are permitted. The submission should include a cover letter entitled "Renewed Petition under 37 CFR 1.137(f)."

The renewed petition should indicate in a prominent manner that the attorney handling this matter is Paul Shanoski, and may be submitted by mail[2], hand-delivery[3], or facsimile[4].

Telephone inquiries regarding *this decision* should be directed to the undersigned at (571) 272-3225. All other inquiries concerning examination procedures or status of the application should be directed to the Technology Center.

Paul Shanoski
Senior Attorney
Office of Petitions
United States Patent and Trademark Office

2 Mail Stop Petition, Commissioner for Patents, United States Patent and Trademark Office, P.O. Box 1450, Alexandria, VA, 22313-1450.
3 Customer Window, Randolph Building, 401 Dulaney Street, Alexandria, VA, 22314.
4 (571) 273-8300- please note this is a central facsimile number.

UNITED STATES PATENT AND TRADEMARK OFFICE

COMMISSIONER FOR PATENTS
UNITED STATES PATENT AND TRADEMARK OFFICE
P.O. BOX 1450
ALEXANDRIA, VA 22313-1450
WWW.USPTO.GOV

Paper No. None

FENWICK & WEST LLP
SILICON VALLEY CENTER
801 CALIFORNIA STREET
MOUNTAIN VIEW CA 94041

COPY MAILED
MAY 1 0 2006
OFFICE OF PETITIONS

In re Application of :
Kangle Yang et al. :
Application No. 10/953,810 : DECISION ON RENEWED PETITION
Filed: September 28, 2004 : UNDER 37 C.F.R. §1.137(f)
Attorney Docket No. 23876-09335 :
Title: SETTLEMENT OF AUCTIONS :
BY DETERMINING QUANTITY BEFORE :
PRICE :

This is a decision on the renewed petition filed on April 11, 2006, pursuant to 37 C.F.R. §1.137(f), to revive the above-identified application.

A grantable petition pursuant to 37 CFR 1.137(f) must be accompanied by:

(1) Notification of the filing of an application in a foreign country or under a multinational treaty that requires 18 month publication[1];
(2) The petition fee as set forth in 37 C.F.R. § 1.17(m), and;
(3) A statement that the entire delay in filing the notice from the date that the notice was due under 35 U.S.C. §122(b)(2)(B)(iii) until the date the notice was filed was unintentional. The Commissioner may require additional information where there is a question whether the delay was unintentional.

1 See PTO/SB/36 and paragraph on PTO/SB/64a for further information. Both may be downloaded at http://www.uspto.gov/web/forms/index.html.

Petitioner states that the present nonprovisional application is the subject of an application filed in either a foreign or an international application on November 11, 2004. However, the United States Patent and Trademark Office was unintentionally not notified of this filing within 45 days subsequent to the filing of the subject application in either an international application or a foreign country.

The original petition was submitted on January 17, 2006, and was dismissed via the mailing of a decision on March 16, 2006 for failure to submit a Notice of Rescission of Nonpublication Request.

With this renewed petition, a Notice of Rescission of Nonpublication Request has been submitted.

In view of the above, this application became abandoned pursuant to 35 U.S.C. §1.22(b)(2)(B)(iii) and 37 C.F.R. §1.213(c) for failure to timely notify the Office of the filing of either a foreign application or an application under a multilateral international agreement that requires publication of applications 18 months after filing.

The petition under 37 C.F.R. §1.137(f) is **GRANTED**.

Petitioner has submitted the notification of either a foreign or an international filing, paid the petition fee, and has made the proper statement of unintentional delay.

The present petition has been found to be in compliance with 37 C.F.R. §1.137(f). Accordingly, the failure to timely notify the Office of a foreign or international filing within 45 days after the date of filing of such foreign or international application as provided by 35 U.S.C. §122(b)(2)(B)(iii) and 37 C.F.R. §1.213(c) is accepted as having been unintentionally delayed.

After this decision is mailed, Technology Center 3600 will be made aware of this decision.

The general phone number for the Office of Petitions which should be used for status requests is (571) 272-3282. Telephone inquiries regarding *this decision* should be directed to the undersigned at (571) 272-3225.

**Paul Shanoski**
**Senior Attorney**
**Office of Petitions**
**United States Patent and Trademark Office**

UNITED STATES PATENT AND TRADEMARK OFFICE

Commissioner for Patents
United States Patent and Trademark Office
P.O. Box 1450
Alexandria, VA 22313-1450
www.uspto.gov

FENWICK & WEST LLP
SILICON VALLEY CENTER
801 CALIFORNIA STREET
MOUNTAIN VIEW, CA 94041

COPY MAILED

AUG 15 2008

| | | |
|---|---|---|
| In re Application of | : | |
| Kangle Yang, et al. | : | |
| Application No. 10/953,810 | : | DECISION ON PETITION |
| Filed: September 28, 2004 | : | TO WITHDRAW |
| Attorney Docket No. 23876-09335 | : | FROM RECORD |
| | : | |

This is a decision on the Request to Withdraw as attorney or agent of record under 37 C.F.R. § 1.36(b), filed March 26, 2008.

The request is **APPROVED**.

A grantable request to withdraw as attorney/agent of record must be signed by every attorney/agent seeking to withdraw or contain a clear indication that one attorney is signing on behalf of another/others. A request to withdraw will not be approved unless at least 30 (thirty) days would remain between the date of approval and the later of the expiration date of a time to file a response or the expiration date of the maximum time period which can be extended under 37 C.F.R. § 1.136(a).

The request was signed by Michael Farn on behalf of all attorneys of record who are associated with customer No. 00758.

All attorneys/agents associated with the Customer Number 00758 have been withdrawn.

Applicant is reminded that there is no attorney of record at this time.

The request to change the correspondence of record is not acceptable as the requested correspondence address is not that of: (1) the first named signing inventor; or (2) an intervening assignee of the entire interest under 37 C.F.R 3.71. All future communications from the Office will be directed to the first named signing inventor at the first copied address below until otherwise properly notified by the applicant.

In order to request or take action in a patent matter, the assignee must establish its ownership of the patent to the satisfaction of the Director. In this regard, a Statement under 37 CFR 3.73(b) must have either: (i) documentary evidence of a chain of title from the original owner to the assignee (*e.g.*, copy of an executed assignment), and a statement affirming that the documentary evidence of the chain of title from the original owner to the assignee was or concurrently is being submitted for recordation pursuant to § 3.11; or (ii) a statement specifying where documentary evidence of a chain of title from the original owner to the assignee is recorded in the assignment records of the Office (*e.g.*, reel and frame number).

There is an outstanding Office action mailed March 26, 2008 that requires a reply from the applicant.

Telephone inquiries concerning this decision should be directed to undersigned at 571-272-1642.

April M. Wise
Petitions Examiner
Office of Petitions

cc: KANG LE YANG
#33, FANQING 3, XUANBAOM
TAIXING
JIANGSU PROVINCE 225432
CHINA

cc: EXCHANGE REPUBLIC.COM LIMITED
FLAT B, 11/F, PROSPECT MANSION, 66-72
PATERSON STREET
CAUSEWAY BAY
HONG KONG
P.R. CHINA

UNITED STATES PATENT AND TRADEMARK OFFICE

UNITED STATES DEPARTMENT OF COMMERCE
United States Patent and Trademark Office
Address: COMMISSIONER FOR PATENTS
P.O. Box 1450
Alexandria, Virginia 22313-1450
www.uspto.gov

| APPLICATION NUMBER | FILING OR 371(C) DATE | FIRST NAMED APPLICANT | ATTY. DOCKET NO./TITLE |
|---|---|---|---|
| 10/953,810 | 09/28/2004 | Kangle Yang | 23876-09335 |

**CONFIRMATION NO. 9688**

**POWER OF ATTORNEY NOTICE**

758
FENWICK & WEST LLP
SILICON VALLEY CENTER
801 CALIFORNIA STREET
MOUNTAIN VIEW, CA 94041

*OC000000031471680*

Date Mailed: 08/08/2008

## NOTICE REGARDING CHANGE OF POWER OF ATTORNEY

This is in response to the Power of Attorney filed 03/26/2008.

- The withdrawal as attorney in this application has been accepted. Future correspondence will be mailed to the new address of record. 37 CFR 1.33.

/amwise/

Office of Data Management, Application Assistance Unit (571) 272-4000, or (571) 272-4200, or 1-888-786-0101

UNITED STATES PATENT AND TRADEMARK OFFICE

COMMISSIONER FOR PATENTS
UNITED STATES PATENT AND TRADEMARK OFFICE
P.O. BOX 1450
ALEXANDRIA, VA 22313-1450
www.uspto.gov

SIDLEY AUSTIN LLP
555 WEST 5TH STREET
SUITE 4000
LOS ANGELES, CA 91723

**COPY MAILED**

MAR 26 2008

**OFFICE OF PETITIONS**

| | | |
|---|---|---|
| In re Application of | : | |
| Chris Miller, et al. | : | |
| Application No. 10/953,827 | : | ON PETITION |
| Filed: September 29, 2004 | : | |
| Attorney Docket No. 24647-81951 | : | |

This is a decision in response to the petition, filed November 9, 2007, which is being treated under 37 CFR 1.181 to issue a corrected Filing Receipt.

The petition is **DISMISSED**.

A review of the record discloses that the above-identified application was filed on September 29, 2004. The filing included reference to the claim for priority to provisional Application No. 60/506,807, filed September 26, 2003, in the first sentence of the specification under the title of the invention. However, since the present nonprovisional application was not filed within twelve months of the filing date of the prior-filed provisional application, it is not entitled to the benefit of the earlier filed provisional application. Consequently, it would be inappropriate for the Official Filing Receipt to include the priority data for the provisional application.

The application is being forwarded to Technology Center AU 1616 for further prosecution.

Any inquiries concerning this decision may be directed to the undersigned at (571) 272-3204. All other inquiries concerning either the examination procedures or status of the application should be directed to the Technology Center.

Sherry D. Brinkley
Petitions Examiner
Office of Petitions

UNITED STATES PATENT AND TRADEMARK OFFICE

Commissioner for Patents
United States Patent and Trademark Office
P.O. Box 1450
Alexandria, VA 22313-1450
www.uspto.gov

SIDLEY AUSTIN LLP
555 WEST 5TH STREET
SUITE 4000
LOS ANGELES, CA 91723

COPY MAILED
JUN 18 2008
OFFICE OF PETITIONS

| | | |
|---|---|---|
| In re Application of | : | |
| Chris Miller, et al. | : | |
| Application No. 10/953,827 | : | ON PETITION |
| Filed: September 29, 2004 | : | |
| Attorney Docket No. 24647-81951 | : | |

This is a decision in response to the renewed petition, filed April 11, 2008, which is being treated under 37 CFR 1.181 to review the refusal to issue a corrected Filing Receipt.

The petition is **GRANTED**.

A review of the record discloses that the application was filed on September 29, 2004. The filing included the reference required by 35 U.S.C. § 119(e) to prior-filed provisional Application No. 60/506,807; however, the Official Filing Receipt failed to include the priority data for the provisional application. Accordingly, on November 9, 2007 applicants submitted a request that the priority data as claimed by applicant be added to the Official Filing Receipt. The request was treated as a petition under 37 CFR 1.181 and a decision issued on March 26, 2008, indicating that the request could not be granted since the application to which priority is claimed was filed over a year prior to the filing date of this application. In response, on April 11, 2008, the present petition was filed. Petitioners argue that September 26, 2003 is not the correct filing date of provisional Application No. 60/506,807, but rather September 29, 2003. Accordingly, petitioners request that the application be amended to reflect priority to the provisional application.

It is noted that a petition to correct the filing date of provisional Application No. 60/506,807 from September 26, 2003 to September 29, 2003 was filed, and subsequently granted in a decision mailed June 11, 2008.

In view of the above, a corrected Filing Receipt, which includes the priority data for provisional Application No. 60/506,807, filed September 29, 2003, accompanies this decision on petition.

***Applicant should note that the fact that the corrected Filing Receipt accompanying this decision on petition includes the prior-filed applications should <u>not</u> be construed as meaning that applicant is entitled to the claim for benefit of priority to the prior-filed applications noted thereon. Accordingly, the examiner will, in due course, consider this benefit claim and determine whether the instant application is entitled to the benefit of the earlier filing date.***

Any inquiries concerning this decision may be directed to the undersigned at (571) 272-3204. All other inquiries concerning either the examination procedures or status of the application should be directed to the Technology Center.

The application is being forwarded to Technology Center AU 1616 for further prosecution, including consideration by the examiner, in due course, of the benefit of priority to the prior-filed applications.

Sherry D. Brinkley
Petitions Examiner
Office of Petitions

Attachment: Corrected Filing Receipt

UNITED STATES PATENT AND TRADEMARK OFFICE

UNITED STATES DEPARTMENT OF COMMERCE
United States Patent and Trademark Office
Address: COMMISSIONER FOR PATENTS
P.O. Box 1450
Alexandria, Virginia 22313-1450
www.uspto.gov

| APPLICATION NUMBER | FILING or 371(c) DATE | GRP ART UNIT | FIL FEE REC'D | ATTY.DOCKET.NO | TOT CLAIMS | IND CLAIMS |
|---|---|---|---|---|---|---|
| 10/953,827 | 09/29/2004 | 1616 | 1824 | 24647-81951 | 22 | 4 |

**CONFIRMATION NO. 1631**

**CORRECTED FILING RECEIPT**

*OC000000030535259*

34492
Sidley Austin LLP
555 West 5th Street
Suite 4000
Los Angeles, CA 91723

Date Mailed: 06/18/2008

Receipt is acknowledged of this non-provisional patent application. The application will be taken up for examination in due course. Applicant will be notified as to the results of the examination. Any correspondence concerning the application must include the following identification information: the U.S. APPLICATION NUMBER, FILING DATE, NAME OF APPLICANT, and TITLE OF INVENTION. Fees transmitted by check or draft are subject to collection. Please verify the accuracy of the data presented on this receipt. **If an error is noted on this Filing Receipt, please submit a written request for a Filing Receipt Correction. Please provide a copy of this Filing Receipt with the changes noted thereon. If you received a "Notice to File Missing Parts" for this application, please submit any corrections to this Filing Receipt with your reply to the Notice. When the USPTO processes the reply to the Notice, the USPTO will generate another Filing Receipt incorporating the requested corrections**

**Applicant(s)**

Chris Miller, North Vancouver, CANADA;
Abdi Ghaffari, Edmonton, CANADA;
Ali Ardakani, Edmonton, CANADA;
Bruce Murray, Tofield, CANADA;
Doug Hole, Edmonton, CANADA;

**Power of Attorney:** The patent practitioners associated with Customer Number 34492

**Domestic Priority data as claimed by applicant**

This appln claims benefit of 60/506,807 09/29/2003

**Foreign Applications**

**If Required, Foreign Filing License Granted:** 12/14/2004

The country code and number of your priority application, to be used for filing abroad under the Paris Convention, is **US 10/953,827**

**Projected Publication Date:** Not Applicable

**Non-Publication Request:** No

**Early Publication Request:** No

**Title**

Use of exogenous gasoues nitric oxide in the treatment and disinfection of biofilms

**Preliminary Class**

424

## PROTECTING YOUR INVENTION OUTSIDE THE UNITED STATES

Since the rights granted by a U.S. patent extend only throughout the territory of the United States and have no effect in a foreign country, an inventor who wishes patent protection in another country must apply for a patent in a specific country or in regional patent offices. Applicants may wish to consider the filing of an international application under the Patent Cooperation Treaty (PCT). An international (PCT) application generally has the same effect as a regular national patent application in each PCT-member country. The PCT process **simplifies** the filing of patent applications on the same invention in member countries, but **does not result** in a grant of "an international patent" and does not eliminate the need of applicants to file additional documents and fees in countries where patent protection is desired.

Almost every country has its own patent law, and a person desiring a patent in a particular country must make an application for patent in that country in accordance with its particular laws. Since the laws of many countries differ in various respects from the patent law of the United States, applicants are advised to seek guidance from specific foreign countries to ensure that patent rights are not lost prematurely.

Applicants also are advised that in the case of inventions made in the United States, the Director of the USPTO must issue a license before applicants can apply for a patent in a foreign country. The filing of a U.S. patent application serves as a request for a foreign filing license. The application's filing receipt contains further information and guidance as to the status of applicant's license for foreign filing.

Applicants may wish to consult the USPTO booklet, "General Information Concerning Patents" (specifically, the section entitled "Treaties and Foreign Patents") for more information on timeframes and deadlines for filing foreign patent applications. The guide is available either by contacting the USPTO Contact Center at 800-786-9199, or it can be viewed on the USPTO website at http://www.uspto.gov/web/offices/pac/doc/general/index.html.

For information on preventing theft of your intellectual property (patents, trademarks and copyrights), you may wish to consult the U.S. Government website, http://www.stopfakes.gov. Part of a Department of Commerce initiative, this website includes self-help "toolkits" giving innovators guidance on how to protect intellectual property in specific countries such as China, Korea and Mexico. For questions regarding patent enforcement issues, applicants may call the U.S. Government hotline at 1-866-999-HALT (1-866-999-4158).

## LICENSE FOR FOREIGN FILING UNDER

## Title 35, United States Code, Section 184

## Title 37, Code of Federal Regulations, 5.11 & 5.15

**GRANTED**

The applicant has been granted a license under 35 U.S.C. 184, if the phrase "IF REQUIRED, FOREIGN FILING LICENSE GRANTED" followed by a date appears on this form. Such licenses are issued in all applications where the conditions for issuance of a license have been met, regardless of whether or not a license may be required as

set forth in 37 CFR 5.15. The scope and limitations of this license are set forth in 37 CFR 5.15(a) unless an earlier license has been issued under 37 CFR 5.15(b). The license is subject to revocation upon written notification. The date indicated is the effective date of the license, unless an earlier license of similar scope has been granted under 37 CFR 5.13 or 5.14.

This license is to be retained by the licensee and may be used at any time on or after the effective date thereof unless it is revoked. This license is automatically transferred to any related applications(s) filed under 37 CFR 1.53(d). This license is not retroactive.

The grant of a license does not in any way lessen the responsibility of a licensee for the security of the subject matter as imposed by any Government contract or the provisions of existing laws relating to espionage and the national security or the export of technical data. Licensees should apprise themselves of current regulations especially with respect to certain countries, of other agencies, particularly the Office of Defense Trade Controls, Department of State (with respect to Arms, Munitions and Implements of War (22 CFR 121-128)); the Bureau of Industry and Security, Department of Commerce (15 CFR parts 730-774); the Office of Foreign AssetsControl, Department of Treasury (31 CFR Parts 500+) and the Department of Energy.

**NOT GRANTED**

No license under 35 U.S.C. 184 has been granted at this time, if the phrase "IF REQUIRED, FOREIGN FILING LICENSE GRANTED" DOES NOT appear on this form. Applicant may still petition for a license under 37 CFR 5.12, if a license is desired before the expiration of 6 months from the filing date of the application. If 6 months has lapsed from the filing date of this application and the licensee has not received any indication of a secrecy order under 35 U.S.C. 181, the licensee may foreign file the application pursuant to 37 CFR 5.15(b).

UNITED STATES PATENT AND TRADEMARK OFFICE

Commissioner for Patents
United States Patent and Trademark Office
P.O. Box 1450
Alexandria, VA 22313-1450
www.uspto.gov

**AKERMAN SENTERFITT**
**P.O. BOX 3188**
**WEST PALM BEACH, FL 33402-3188**

COPY MAILED
MAR 16 2010

In re Patent No. **7,147,832** :
Issue Date: December 12, 2006 :
Application No. 10/953,832 : NOTICE UNDER 37 CFR 1.28(C)
Filed: September 29, 2004 :
Attorney Docket No. **3875-28 (184747)** :

This is a notice regarding your request for acceptance of a fee deficiency submission under 37 CFR 1.28. On September 1, 1998, the Court of Appeals for the Federal Circuit held that 37 CFR 1.28(c) is the sole provision governing the time for correction of the erroneous payment of the issue fee as a small entity. **See DH Technology v. Synergystex International, Inc. 154 F.3d 1333, 47 USPQ2d 1865 (Fed. Cir. Sept. 1, 1998).**

The Office no longer investigates or rejects original or reissue applications under 37 CFR 1.56. **1098 Off. Gaz. Pat. Office 502 (January 3, 1989).** Therefore, nothing in this Notice is intended to imply that an investigation was done.

There is no indication that the petition is signed by a registered patent attorney or patent agent of record. However, in accordance with 37 CFR 1.34, the signature of Mr. Peter A. Chiabotti appearing on the correspondence shall constitute a representation to the United States Patent and Trademark Office that he is authorized to represent the particular party in whose behalf he acts. If, Mr. Chiabotti desires to receive correspondence regarding this file, the appropriate power of attorney documents must be submitted.

Your fee deficiency submission under 37 CFR 1.28 is hereby **ACCEPTED**.

This application is no longer entitled to small entity status. Accordingly, all future fees paid in this application must be paid at the large entity rate.

Inquiries related to this communication should be directed to Monica A. Graves at (571) 272-7253.

/Monica A. Graves/
Petitions Examiner, Office of Petitions

UNITED STATES PATENT AND TRADEMARK OFFICE

Commissioner for Patents
United States Patent and Trademark Office
P.O. Box 1450
Alexandria, VA 22313-1450
www.uspto.gov

JAN 11 2006

HELLER EHRMAN LLP
275 MIDDLEFIELD ROAD
MENLO PARK CA 94025-3506

| | |
|---|---|
| In re Application of | : |
| Steven Y. Ng et al | : |
| Serial No.: 10/953,841 | : PETITION TO MAKE SPECIAL |
| Filed: September 28,2004 | : |
| Attorney Docket No.: 10008-7184 P1 | : |

This is in response to the petition filed December 21, 2005, to make the above-identified application special under the provisions of 37 CFR 1.102(d).

Applicant has satisfied the provisions set forth in M.P.E.P. 708.02, VIII. Therefor the petition is **GRANTED**.

**The following condition applies to the grant of this petition: If, upon examination, it is determined that a restriction requirement is necessary because of multiple inventions being claimed, applicant will be required to make an election without traverse of a single invention to be prosecuted. Failure to make an election without traverse will void the special status accorded in this decision.**

**The application will be forwarded the examiner for action on the merits commensurate with this decision.**

Should there be any questions with regard to this letter please contact William R. Dixon, Jr. by letter addressed to the Director, Technology Center 1600, P.O. Box 1450, Alexandria, VA 22313-1450, or by telephone at 571-272-0519 or by facsimile transmission at the general Office facsimile number, 571-272-0519.

William R. Dixon, Jr.
Special Program Examiner
Technology Center 1600

UNITED STATES PATENT AND TRADEMARK OFFICE

Commissioner for Patents
United States Patent and Trademark Office
P.O. Box 1450
Alexandria, VA 22313-1450
www.uspto.gov

COPY MAILED

SEP 1 0 2009

OFFICE OF PETITIONS

FOLEY & LARDNER LLP
975 PAGE MILL ROAD
PALO ALTO CA 94304

| | | |
|---|---|---|
| In re Application of | : | |
| Steven Y. Ng et al. | : | |
| Application No. 10/953,841 | : | DECISION ON PETITION |
| Filed: September 28, 2004 | : | TO WITHDRAW |
| Attorney Docket No. 092888-2904 | : | FROM RECORD |
| | : | |

This is a decision on the Request to Withdraw as attorney or agent of record under 37 CFR. § 1.36(b), filed July 15, 2009.

The request is **NOT APPROVED** as moot.

A review of the file record indicates that the power of attorney to attorneys/agents associated with Customer Number 38706 has been revoked by the assignee of the patent application on August 10, 2009. Accordingly, the request to withdraw under 37 C.F.R. § 1.36(b) is moot.

All future communications from the Office will continue to be directed to the below-listed address until otherwise notified by applicant.

Telephone inquires concerning this decision should be directed to JoAnne Burke at 571-272- 4584.

JoAnne Burke
Petitions Examiner
Office of Petitions

cc: HDC LLP
3239 El Camino Real, Suite 220
Palo Alto CA 94306

UNITED STATES PATENT AND TRADEMARK OFFICE

COMMISSIONER FOR PATENTS
UNITED STATES PATENT AND TRADEMARK OFFICE
P.O. BOX 1450
ALEXANDRIA, VA 22313-1450
www.uspto.gov

COPY MAILED

SEP 28 2009

OFFICE OF PETITIONS

K&L GATES LLP
535 SMITHFIELD STREET
PITTSBURGH PA 15222

In re Application :
Festog, et al. :
Application No. 10/953,844 : PATENT TERM ADJUSTMENT
Filed: September 29, 2004 :
Dkt. No.: 040014 :

This is in response to the "APPLICATION FOR PATENT TERM ADJUSTMENT," filed September 10, 2009. Applicants submit that the correct patent term adjustment to be indicated on the patent is 1,043 days, not 797 days as calculated by the Office as of the mailing of the initial determination of patent term adjustment. Applicant requests this correction on the basis that the Office will take in excess of three years to issue this patent.

This matter is being properly treated under 37 CFR 1.705(b) as an application for patent term adjustment. As the instant application for patent term adjustment requests reconsideration of the patent term adjustment as it relates to the Office's failure to issue the patent within 3 years of the filing date, the application for patent term adjustment under 37 CFR 1.705(b) is DISMISSED as PREMATURE.

Knowledge of the actual date the patent issues is required to calculate the amount, if any, of additional patent term patentee is entitled to for Office failure to issue the patent within 3 years. See, § 1.702(b). (This is true even where a request for continued examination (RCE) was filed). The computer will not undertake the § 1.702(b) calculation until the actual date of issuance of the patent has been determined. Likewise, the computer will not calculate any further Office delay under § 1.702(a)(4) or applicant delay under § 1.704(c)(10) until the actual date of issuance of the patent has been determined. As such, the Office can not make a determination on the correctness of the patent term adjustment until the patent has issued.

Requesting reconsideration of the patent term adjustment to be indicated on the patent based on the initial determination of patent term adjustment and a projected issuance date of the patent (or even the filing date of the request for continued examination) is premature. Accordingly, it is appropriate to dismiss as premature such a request.

Applicant is advised that they may wait until the time of the issuance of the patent and file a request for reconsideration of the patent term adjustment pursuant to 37 CFR 1.705(d). As the USPTO does not calculate the amount of time earned pursuant to 37 CFR 1.702(b) until the time of the issuance of the patent, the Office will consider any request for reconsideration of the patent term adjustment due to an error in the calculation of 37 CFR 1.702(b) to be timely if the

request for reconsideration is filed within two months of the issuance of the patent. However, as to all other bases for contesting the initial determination of patent term adjustment received with the notice of allowance, applicant must timely file an application for patent term adjustment prior to the payment of the issue fee[1].

The required patent term adjustment application fee of $200.00 has been charged to applicants' deposit account, as authorized. See, 37 CFR 1.18(e).

Any request for reconsideration of the patent term adjustment indicated on the patent must be timely filed within 2 months after issuance pursuant to 37 CFR 1.705(d) and must include payment of the required fee under 37 CFR 1.18(e).

The Office of Data Management has been advised of this decision. This application is being referred to the Office of Data Management for issuance of the patent.

Telephone inquiries specific to this decision should be directed to the undersigned at (571) 272-3205.

Alesia M. Brown
Petitions Attorney
Office of Petitions

[1] For example, if applicant disputes both the calculation of patent term adjustment under 37 CFR 1.702(a)(1) for Office failure to mail a first Office action or notice of allowance not later than fourteen months after the date on which the application was filed and under 37 CFR 1.702(b) for Office failure to issue a patent within three years of the actual filing date of the application, then applicant must still timely file an application for patent term adjustment prior to the payment of the issue fee to contest the calculation of Office delay in issuing a first Office action or notice of allowance. See 37 CFR 1.705(b) and 35 U.S.C. 154(b)(3)(B). A dispute as to the calculation of the §1.702(a)(1) period raised on request for reconsideration of patent term adjustment under 37 CFR 1.705(d) will be dismissed as untimely filed.

UNITED STATES PATENT AND TRADEMARK OFFICE

UNITED STATES DEPARTMENT OF COMMERCE
United States Patent and Trademark Office
Address: COMMISSIONER FOR PATENTS
P.O. Box 1450
Alexandria, Virginia 22313-1450
www.uspto.gov

K&L GATES LLP
210 SIXTH AVENUE
PITTSBURGH, PA 15222-2613

Mail Date: 04/21/2010

| | | |
|---|---|---|
| **Applicant** | : Jeffrey Festog | : DECISION ON REQUEST FOR |
| **Patent Number** | : 7610230 | : RECALCULATION of PATENT |
| **Issue Date** | : 10/27/2009 | : TERM ADJUSTMENT IN VIEW |
| **Appliction No** | : 10/953,844 | : OF WYETH AND NOTICE OF INTENT TO |
| **Filed** | : 09/29/2004 | : ISSUE CERTIFICATE OF CORRECTION |
| | | : |

The Request for Recalculation is **GRANTED** to the extent indicated.

The patent term adjustment has been determined to be **1042** days. The USPTO will *sua sponte* issue a certificate of correction reflecting the amount of PTA days determined by the recalculation.

Prior to the issuance of the certificate of correction, the USPTO will afford patentee an opportunity to be heard and request reconsideration. Accordingly, patentee has **one month or thirty (30) days**, whichever is longer, to file a request for reconsideration of this patent term adjustment calculation. See 35 U.S.C. 154(b)(3)(B)(ii) and 37 CFR 1.322(a)(4). No extensions of time will be granted under 37 CFR 1.136.

Patentee should use document code PET.OP if electronically filing a request for reconsideration of this patent term adjustment calculation. The patentee must also include the information required by 37 CFR 1.705(b)(2) and the fee required by 37 CFR 1.18(e). If patentee does not file a timely request for reconsideration of this patent term adjustment calculation including the information required by 37 CFR 1.705(b)(2) and the fee required by 37 CFR 1.18(e), the USPTO will issue a certificate of correction reflecting the PTA determination noted above.

Patentee should be aware that in order to preserve the right to review in the United States District Court for the District of Columbia of the USPTO patent term adjustment determination, patentee must ensure that he or she also take the steps required under 35 U.S.C. 154(b)(4)(A) in a timely manner. Nothing in the request for recalculation should be construed as providing an alternative time frame for commencing a civil action under 35 U.S.C. 154(b)(4)(A).

Any questions concerning this decision should be directed to the Office of Patent Legal Administration at 571-272-7702.

UNITED STATES PATENT AND TRADEMARK OFFICE

Commissioner for Patents
United States Patent and Trademark Office
P.O. Box 1450
Alexandria, VA 22313-1450
www.uspto.gov

COPY MAILED
AUG 0 8 2006
OFFICE OF PETITIONS

HORACIO ANDRES TRUCCO
3830 ELIJAH COURT, UNIT 821
SAN DIEGO, CA 92130-6013

| | | |
|---|---|---|
| In re Application of | : | |
| TRUCCO | : | |
| Application No. 10/953,846 | : | ON PETITION |
| Filed: September 29, 2004 | : | |
| Attorney Docket No. (None) | : | |

This is a decision on the petition under 37 CFR 1.137(a), filed June 2, 2006, which is being treated as a request for a one-month extension of time under 37 CFR 1.136(a), and a petition under 37 CFR 1.102(c)(1), filed September 29, 2004, to make the application special.

The petitions are **GRANTED.**

PETITION FOR ONE-MONTH EXTENSION OF TIME

The Office Action mailed April 5, 2006 set a shortened statutory period of one month, or thirty days, whichever is longer, to respond to the restriction and election of species requirement. The Office Action Summary also states extensions of time may be available under the provisions of 37 CFR 1.136(a). Applicant has requested a one-month extension of time[1] in the declaration submitted on June 2, 2006, along with a *bona fide* response to the restriction and election of species requirement.

The excess of the fee paid ($190) is unnecessary and will be refunded to applicant in due course.

PETITION TO MAKE SPECIAL BASED ON AGE

A grantable petition to make an application special under 37 CFR 1.102(c)(1) and MPEP § 708.02, Section IV: Applicant's Age, must be accompanied by evidence showing that at least one of the applicants is 65 years of age, or more, such as a birth certificate or a statement by

[1] See paragraph 6 ("requesting a one-month extension").

applicant. No fee is required. The instant petition includes a copy of applicant's passport identifying his date of birth (May 1, 1931)[2]. Accordingly, the above-identified application has been accorded "special" status.

Since no fee is required for this type of petition to make the application special, the $130 petition fee will also be refunded to the applicant in due course.

Telephone inquiries concerning this decision should be directed to the undersigned at (571) 272-4787.

All other inquiries concerning either the examination or status of the application should be directed to the Technology Center.

The application is being forwarded to the Technology Center Art Unit 2841 for action on the merits commensurate with this decision.

Denise Pothier
Petitions Examiner
Office of Petitions

[2] The petition filed September 29, 2004 states that a declaration in support of the petition to make special was attached. This attachment is not part of the file. A copy of the passport with applicant's date of birth, however, was filed June 2, 2006 and is found to be sufficient evidence that applicant is 65 years of age or more.

UNITED STATES PATENT AND TRADEMARK OFFICE

Commissioner for Patents
United States Patent and Trademark Office
P.O. Box 1450
Alexandria, VA 22313-1450
www.uspto.gov

WOODCOCK WASHBURN LLP
CIRA CENTRE 12TH FLOOR
2929 ARCH STREET
PHILADELPHIA PA 19104-2891

COPY MAILED

FEB 06 2008

OFFICE OF PETITIONS

| | |
|---|---|
| In re | : |
| Mason, Jr., et al. | : DECISION REGARDING |
| Application No. 10/953,847 | : PATENT TERM ADJUSTMENT |
| Filed: September 29, 2004 | : AND |
| Patent No. 7,312,721 | : NOTICE OF INTENT TO ISSUE |
| Issued: December 25, 2007 | : CERTIFICATE OF CORRECTION |

This decision is in response to the "REMARKS AFTER ALLOWANCE PURSUANT TO 37 CFR § 1.312", filed October 17, 2007, requesting correction of the patent term adjustment (PTA).

The request is **GRANTED**.

The patent term adjustment indicated on the patent is to be corrected by issuance of a certificate of correction showing a revised Patent Term Adjustment of **two hundred thirty-seven (237) days**.

On December 25, 2007, the above-identified application matured into U.S. Patent No. 7,312,721. The patent issued with a Patent Term Adjustment of two hundred ninety-three (293) days.

However, as pointed out in the application for patent term adjustment, there was an error in the determination of the PTA.

A review of the file reveals that applicants filed a response to a non-final Office action on June 7, 2007. Thereafter, applicants filed a IDS on August 2, 2007. As the IDS was supplemental to the June 7, 2007 response, pursuant to 37 C.F.R. § 1.704(c)(8), applicant delay of fifty-six (56) days should have been assessed.

In view thereof, the correct determination of patent term adjustment is **two hundred thirty-seven (237) days** (379 days of PTO delay, reduced by 142 (86+56) days of applicant delay).

Accordingly, issuance of a certificate of correction pursuant to 35 U.S.C. 254 and 37 C.F.R. §1.322 is appropriate.

Give the basis for granting this decision, no fee is required and none has been charged. The Office thanks Patentees for their good faith and candor in bringing this matter to the attention of the Office.

The application file is being forwarded to the Certificates of Correction Branch for issuance of a certificate of correction in order to rectify the error regarding the patent term information. See 35 U.S.C. 254 and 37 C.F.R. §1.322. The certificate of correction will indicate that the term of the above-identified patent is extended or adjusted by **two hundred thirty-seven (237) days**, subject to any disclaimers.

Telephone inquiries specific to this letter should be directed to Cliff Congo, Petitions Attorney, at (571)272-3207.

Nancy Johnson
Senior Legal Advisor
Office of Petitions

Enclosure: draft Certificate of Correction

UNITED STATES PATENT AND TRADEMARK OFFICE

# DRAFT CERTIFICATE OF CORRECTION

PATENT : 7,312,721 B2

DATED : December 25, 2007

INVENTOR(S) : Mason, Jr., et al.

DRAFT

It is certified that error appears in the above-identified patent and that said Letters Patent is hereby corrected as shown below:

On the cover page,

[*] Notice: Subject to any disclaimer, the term of this patent is extended or adjusted under 35 USC 154(b) by (293) days

Delete the phrase "by 293 days" and insert – by 237 days—

UNITED STATES PATENT AND TRADEMARK OFFICE

Commissioner for Patents
United States Patent and Trademark Office
P.O. Box 1450
Alexandria, VA 22313-1450
www.uspto.gov

**Eric D. Cohen**
**Welsh & Katz, Ltd.**
**22nd Floor**
**120 South Riverside Plaza**
**Chicago, IL 60606**

**COPY MAILED**

APR 22 2008

**OFFICE OF PETITIONS**

| | | |
|---|---|---|
| In re Application of | : | |
| Yi-Ming Lee et al. | : | |
| Application No. 10/953,853 | : | DECISION ON PETITION |
| Filed: September 29, 2004 | : | TO WITHDRAW |
| Attorney Docket No. MR2847-41 | : | FROM RECORD |
| | : | |

This is a decision on the Request to Withdraw as attorney or agent of record under 37 C.F.R. § 1.36(b), filed November 20, 2007.

The request is **NOT APPROVED** because it is moot.

A review of the file record indicates that the power of attorney to Eric D. Cohen has been revoked by the assignee of the patent application on November 21, 2007. Accordingly, the request to withdraw under 37 C.F.R. § 1.36(b) is moot.

All future communications from the Office will continue to be directed to the below-listed address until otherwise notified by applicant.

Telephone inquires concerning this decision should be directed to Terri Williams at 571-272-2991.

Terri Williams
Terri Williams
Petitions Examiner
Office of Petitions

cc: **Rosenberg, Klein & Lee**
**3458 Ellicott Center Drive-Suite 101**
**Ellicott City, MD 21043**

UNITED STATES PATENT AND TRADEMARK OFFICE

Commissioner for Patents
United States Patent and Trademark Office
P.O. Box 1450
Alexandria, VA 22313-1450
www.uspto.gov

MONSANTO COMPANY
800 N. LINDBERGH BLVD.
ATTENTION: GAIL P. WUELLNER, IP
PARALEGAL, (E2NA)
ST. LOUIS, MO 63167

**COPY MAILED**

SEP 10 2008

**OFFICE OF PETITIONS**

In re Application of :
Mary Fernandes :
Application No. 10/953,856 : ON PETITION
Filed: September 29, 2004 :
Attorney Docket No. 38-21(51768)C :

This is a decision on the petition under 37 CFR 1.137(b), filed March 25, 2008, to revive the above-identified application.

The petition is **GRANTED.**

The above-identified application became abandoned for failure to reply in a timely manner to the non-final Office action mailed August 24, 2007, which set a shortened statutory period for reply of three (3) months. No extension of time under the provisions of 37 CFR 1.136(a) were obtained. Accordingly, the above-identified application became abandoned on November 25, 2007.

An extension of time under 37 CFR 1.136 must be filed prior to the expiration of the maximum extendable period for reply. See In re Application of S., 8 USPQ2d 1630, 1631 (Comm'r Pats. 1988). Accordingly, since the $1050 extension of time submitted with the petition on March 25, 2008 was subsequent to the maximum extendable period for reply, this fee is unnecessary and will be credit to petitioner's credit card.

The file does not indicate a change of address has been submitted, although the address given on the petition differs from the address of record. If appropriate, a change of address should be filed in accordance with MPEP 601.03. A courtesy copy of this decision is being mailed to the address given on the petition; however, the Office will mail all future correspondence solely to the address of record.

Telephone inquiries concerning this decision should be directed to Irvin Dingle at (571) 272-3210.

This matter is being referred to Technology Center AU 1638 for further processing.

Irvin Dingle
Petitions Examiner
Office of Petitions

cc: G. Harley Blosser
Sonnenschein, Nath and Rosenthal LLP
211 N. Broadway Ste. 3000
St. Louis, MO 63102

UNITED STATES PATENT AND TRADEMARK OFFICE

Commissioner for Patents
United States Patent and Trademark Office
P.O. Box 1450
Alexandria, VA 22313-1450
www.uspto.gov

COPY MAILED

MAY 2 6 2005

OFFICE OF PETITIONS

AKIN GUMP STRAUSS HAUER & FELD L.L.P.
ONE COMMERCE SQUARE
2005 MARKET STREET, SUITE 2200
PHILADELPHIA, PA 19103

| | | |
|---|---|---|
| In re Application of | : | |
| Yen and Yu | : | |
| Application No.: 10/953,866 | : | |
| Filed: September 29, 2004 | : | DECISION ACCORDING |
| Attorney Docket No: 9476-65U1 | : | STATUS UNDER |
| For: METHOD AND APPARATUS FOR FONT PROCESSING | : | RULE 47(b) |

This is in response to the petition under 37 CFR 1.47(b), filed April 20, 2005.

The petition is **GRANTED**.

The above-identified application and papers have been reviewed and found in compliance with 37 CFR 1.47(b). This application is hereby accorded Rule 1.47(b) status.

The above-identified application was filed on September 29, 2004, without a properly executed oath or declaration. On November 18, 2004, the Office of Initial Patent Examination issued a Notice to file Missing Parts of Non-provisional Application requiring payment of the filing fee, a properly executed declaration, and payment of a surcharge. The notice allowed an extendable period for reply of two-months from its mailing date. The instant petition was filed on April 20, 2005, along with a request for an extension of time within the third month.

By the instant petition and evidentiary documents, petitioner has established that the joint inventors are unavailable and that 37 CFR 1.47(b) applicant has sufficient proprietary interest to proceed with prosecution of the application without the joint inventors.

As provided in Rule 1.47(c), this Office will forward notice of this application's filing to the non-signing inventors at the addresses given in the petition. Notice of the filing of this application will also be published in the Official Gazette.

Deposit account 50-1017 will be charged $200.00 for the instant petition fee.

This application will be forwarded to the Office of Initial Patent Examination for further processing.

Telephone inquiries should be directed to the undersigned at (571) 272-3222.

Kenya A. McLaughlin

Kenya A. McLaughlin
Petitions Attorney
Office of Petitions

UNITED STATES PATENT AND TRADEMARK OFFICE

Commissioner for Patents
United States Patent and Trademark Office
P.O. Box 1450
Alexandria, VA 22313-1450
www.uspto.gov

Jordan Yu
Media Reality Technologies, Inc.
650 North Mary Avenue
Sunnyvale, CA 94085

COPY MAILED

MAY 2 6 2005

OFFICE OF PETITIONS

In re Application of :
Yen and Yu :
Application No.: 10/953,866 :
Filed: September 29, 2004 :
Attorney Docket No: 9476-65U1 :
For: METHOD AND APPARATUS FOR FONT PROCESSING

LETTER

Dear Mr. Yu:

You are named as a joint inventor in the above-identified United States patent application filed under the provisions of 35 U.S.C. 116 (United States Code) and 37 CFR 1.47(b), Rules of Practice in Patent Cases. Should a patent be granted on the application you will be designated therein as a joint inventor.

As a joint inventor, you are entitled to inspect any paper in the file wrapper of the application, order copies of all or any part thereof (at a prepaid cost per 37 CFR 1.19) or make your position of record in the application. Alternatively, you may arrange to do any of the preceding through a registered patent attorney or agent presenting written authorization from you. If you care to join the application, counsel of record (see below) would presumably assist you. Joining in the application would entail the filing of an appropriate oath or declaration by you pursuant to 37 CFR 1.63.

Telephone inquiries regarding this communication should be directed to Petitions Attorney Kenya A. McLaughlin at (571) 272-3222. Requests for information regarding your application should be directed to the File Information Unit at (703) 308-2733. Information regarding how to pay for and order a copy of the application, or a specific paper in the application, should be directed to Certification Division at (703) 308-9726 or 1-800-972-6382 (outside the Washington D.C. area).

Kenya A. McLaughlin
Petitions Attorney
Office of Petitions

AKIN GUMP STRAUSS HAUER & FELD L.L.P.
ONE COMMERCE SQUARE
2005 MARKET STREET, SUITE 2200
PHILADELPHIA, PA 19103

UNITED STATES PATENT AND TRADEMARK OFFICE

Commissioner for Patents
United States Patent and Trademark Office
P.O. Box 1450
Alexandria, VA 22313-1450
www.uspto.gov

COPY MAILED

MAY 2 6 2005

OFFICE OF PETITIONS

Yvonne Yen
Media Reality Technologies, Inc.
650 North Mary Avenue
Sunnyvale, CA 94085

| | | |
|---|---|---|
| In re Application of | : | |
| Yen and Yu | : | |
| Application No.: 10/953,866 | : | |
| Filed: September 29, 2004 | : | LETTER |
| Attorney Docket No: 9476-65U1 | : | |
| For: METHOD AND APPARATUS FOR FONT PROCESSING | | |

Dear Ms. Yen:

You are named as a joint inventor in the above-identified United States patent application filed under the provisions of 35 U.S.C. 116 (United States Code) and 37 CFR 1.47(b), Rules of Practice in Patent Cases. Should a patent be granted on the application you will be designated therein as a joint inventor.

As a joint inventor, you are entitled to inspect any paper in the file wrapper of the application, order copies of all or any part thereof (at a prepaid cost per 37 CFR 1.19) or make your position of record in the application. Alternatively, you may arrange to do any of the preceding through a registered patent attorney or agent presenting written authorization from you. If you care to join the application, counsel of record (see below) would presumably assist you. Joining in the application would entail the filing of an appropriate oath or declaration by you pursuant to 37 CFR 1.63.

Telephone inquiries regarding this communication should be directed to Petitions Attorney Kenya A. McLaughlin at (571) 272-3222. Requests for information regarding your application should be directed to the File Information Unit at (703) 308-2733. Information regarding how to pay for and order a copy of the application, or a specific paper in the application, should be directed to Certification Division at (703) 308-9726 or 1-800-972-6382 (outside the Washington D.C. area).

Kenya A. McLaughlin

Kenya A. McLaughlin
Petitions Attorney
Office of Petitions

AKIN GUMP STRAUSS HAUER & FELD L.L.P.
ONE COMMERCE SQUARE
2005 MARKET STREET, SUITE 2200
PHILADELPHIA, PA 19103

UNITED STATES PATENT AND TRADEMARK OFFICE

Commissioner for Patents
United States Patent and Trademark Office
P.O. Box 1450
Alexandria, VA 22313-1450
www.uspto.gov

INTEL CORPORATION
c/o INTELLEVATE, LLC
P.O. BOX 52050
MINNEAPOLIS, MN 55402

COPY MAILED

JAN 3 1 2008

OFFICE OF PETITIONS

| | | |
|---|---|---|
| In re Application of | : | |
| Shubhendu S. Mukherjee, et. al. | : | |
| Application No. 10/953,887 | : | ON PETITION |
| Filed: September 29, 2004 | : | |
| Attorney Docket No. P18233 | : | |

This is a decision on the petition under 37 CFR 1.137(b), filed on January 15, 2008, to revive the above-identified application.

The application became abandoned for failure to timely respond to the Notice of Allowance and Fee(s) Due mailed June 1, 2007. A Notice of Abandonment was mailed on September 26, 2007.

The petition satisfies the requirements of 37 CFR 1.137(b), in that, petitioner has supplied (1) the reply in the form of $1,440 for payment of the issue fee and $300 for payment of the publication fee; (2) the petition fee of $1,540; and (3) a proper statement of unintentional delay. Therefore, the petition is **GRANTED**.

The file does not indicate a change of address has been submitted, although the address given on the petition differs from the address of record. If appropriate, a change of address should be filed in accordance with MPEP 601.03. A courtesy copy of this decision is being mailed to the address given on the petition; however, the Office will mail all future correspondence solely to the address of record.

This application file is being referred to the Office of Data Management for further processing into a patent.

Telephone inquiries concerning this decision should be directed to the undersigned at (571) 272-3226.

Andrea Smith
Petitions Examiner
Office of Petitions

cc: Intel Corporation
1701 Intervail Drive
MS: AN1-PTL1
Austin, TX 78746

UNITED STATES PATENT AND TRADEMARK OFFICE

UNITED STATES DEPARTMENT OF COMMERCE
United States Patent and Trademark Office
Address: COMMISSIONER FOR PATENTS
P.O. Box 1450
Alexandria, Virginia 22313-1450
www.uspto.gov

THE GATES CORPORATION
IP LAW DEPT. 10-A3
1551 WEWATTA STREET
DENVER, CO 80202

Mail Date: 04/21/2010

| | | |
|---|---|---|
| **Applicant** | : Roger Derrick Stone | : DECISION ON REQUEST FOR |
| **Patent Number** | : 7637829 | : RECALCULATION of PATENT |
| **Issue Date** | : 12/29/2009 | : TERM ADJUSTMENT IN VIEW |
| **Appliction No** | : 10/953,910 | : OF WYETH AND NOTICE OF INTENT TO |
| **Filed** | : 09/29/2004 | : ISSUE CERTIFICATE OF CORRECTION |
| | | : |

The Request for Recalculation is **GRANTED** to the extent indicated.

The patent term adjustment has been determined to be **1059** days. The USPTO will *sua sponte* issue a certificate of correction reflecting the amount of PTA days determined by the recalculation.

Prior to the issuance of the certificate of correction, the USPTO will afford patentee an opportunity to be heard and request reconsideration. Accordingly, patentee has **one month or thirty (30) days**, whichever is longer, to file a request for reconsideration of this patent term adjustment calculation. See 35 U.S.C. 154(b)(3)(B)(ii) and 37 CFR 1.322(a)(4). No extensions of time will be granted under 37 CFR 1.136.

Patentee should use document code PET.OP if electronically filing a request for reconsideration of this patent term adjustment calculation. The patentee must also include the information required by 37 CFR 1.705(b)(2) and the fee required by 37 CFR 1.18(e). If patentee does not file a timely request for reconsideration of this patent term adjustment calculation including the information required by 37 CFR 1.705(b)(2) and the fee required by 37 CFR 1.18(e), the USPTO will issue a certificate of correction reflecting the PTA determination noted above.

Patentee should be aware that in order to preserve the right to review in the United States District Court for the District of Columbia of the USPTO patent term adjustment determination, patentee must ensure that he or she also take the steps required under 35 U.S.C. 154(b)(4)(A) in a timely manner. Nothing in the request for recalculation should be construed as providing an alternative time frame for commencing a civil action under 35 U.S.C. 154(b)(4)(A).

Any questions concerning this decision should be directed to the Office of Patent Legal Administration at 571-272-7702.

UNITED STATES PATENT AND TRADEMARK OFFICE

Commissioner for Patents
United States Patent and Trademark Office
P.O. Box 1450
Alexandria, VA 22313-1450
www.uspto.gov

JAN 19 2005

| | | |
|---|---|---|
| In re Application of<br>VICKERS.<br>Serial Number: 10/953,947<br>Filed: September 29, 2004<br>For: APPARATUS FOR PRODUCTION OF AN ALCOHOLIC BEVERAGE | : | PETITION UNDER M.P.E.P.708.02 IV |

This is in response to the petition filed September 29, 2004, requesting that the above-identified application be granted Special Status under Sections 708.02 IV of the MPEP and 37 CFR 1.102(c) (**no fee required**).

The request for Special Status considered under Section 708.02 IV is granted because criteria under 37 CFR 1.102(c) has been met.

The petition is **GRANTED.**

Richard Crispino, Special Programs Examiner
Technology Center 1700
Chemical and Materials Engineering

Weiss & Moy, PC
4202 North Brown Avenue
Scottsdale, AZ 85251

UNITED STATES PATENT AND TRADEMARK OFFICE

Commissioner for Patents
United States Patent and Trademark Office
P.O. Box 1450
Alexandria, VA 22313-1450
www.uspto.gov

AUG 3 1 2005

| | | |
|---|---|---|
| In re Application of | : | |
| Vickers | : | |
| Serial Number: 10/953,947 | : | PETITION UNDER |
| Filed: September 9, 2004 | : | M.P.E.P.708.02 VIII |
| For: APPARATUS FOR PRODUCTION OF AN | : | |
| ALCOHOLIC BEVERAGE | : | |

This is in response to the petition filed July 22, 2005, requesting that the above-identified application be granted Special Status under Section 708.02 (IV) of the MPEP.

This application was made special in response to a petition filed September 29, 2005. Enclosed is a copy of the granted petition, which was mailed on January 19, 2005.

Accordingly the petition is **DISMISSED.**

R Crispino

Richard Crispino, Special Programs Examiner
Technology Center 1700
Chemical and Materials Engineering

UNITED STATES PATENT AND TRADEMARK OFFICE

Commissioner for Patents
United States Patent and Trademark Office
P.O. Box 1450
Alexandria, VA 22313-1450
www.uspto.gov

OLIFF & BERRIDGE, PLC
P.O. Box 19928
Alexandria, VA 22320

SEP - 2 2006

In re Application of:
Yasushi Okabe
Serial No.: 10/953,950
Filed: September 03, 2004
Attorney Docket No.: **120810**

DECISION ON PETITION TO RESTART THE PERIOD FOR RESPONSE

This is a decision on the petition filed on June 21, 2006, to restart the period for response due to late receipt of the Office action mailed on March 28, 2006. No petition fee is required.

The petition is **GRANTED.**

Petitioner asserts that the Office action mailed March 28, 2006, was not received at the correspondence address until June 19, 2006, when a copy of the Office action was retrieved from U.S. Patent and Trademark online PAIR system. Petitioner asserts that the original Office action was never received. In support of these assertions, petitioner provided a copy of the docket record where the Office action would have been entered if it were received.

A grantable petition to restart the previously set period for reply, pursuant to M.P.E.P. э 710.06, should meet the following criteria:

*(A) the petition is filed within 2 weeks of the date of receipt of the Office action at the correspondence address;*
*(B) a substantial portion of the set reply period had elapsed on the date of receipt (e.g., at least 1 month of a 2- or 3-month reply period had elapsed); and*
*(C) the petition includes (1) evidence showing the date of receipt of the Office action at the correspondence address (e.g., a copy of the Office action having the date of receipt of the Office action at the correspondence address stamped thereon, a copy of the envelope (which contained the Office action) having the date of receipt of the Office action at the correspondence address stamped thereon, etc.), and (2) a statement setting forth the date of receipt of the Office action at the correspondence address and explaining how the evidence being presented establishes the date of receipt of the Office action at the correspondence address.*

A review of the record indicates that the original Office action mailed on March 28, 2006, was returned to the USPTO as undeliverable. It does not appear that any attempts to re-mail the action have been made.

Accordingly, the petition is granted, and the period for response is hereby reset to run three (3) months from June 19, 2006, the date of receipt of the Office action, and expires on September 19, 2006.

Inquiries related to this decision should be directed to Clayton E. LaBalle at (571) 272-1594.

Richard K. Seidel, Director
Technology Center 2800
Semiconductors, Electrical and Optical
Systems and Components

UNITED STATES PATENT AND TRADEMARK OFFICE

Commissioner for Patents
United States Patent and Trademark Office
P.O. Box 1450
Alexandria, VA 22313-1450
www.uspto.gov

**AMELIA B. YARBROUGH, PH D.**
**8613 SAPIENZA DRIVE**
**FORT WASHINGTON, MD 20744**

**COPY MAILED**

JUL 23 2009

**OFFICE OF PETITIONS**

| | | |
|---|---|---|
| In re Application of | : | |
| **Reynaldo DIAS DE MORAES E. SILVA, et al.** | : | |
| Application No. 10/953,959 | : | DECISION ON PETITION |
| Filed: September 30, 2004 | : | UNDER 37 CFR 1.137(b) |
| Attorney Docket No. | : | |

This is a decision on the petition filed in the above-identified application.

The petition is **dismissed**.

The rules and statutory provisions governing the operations of the U.S. Patent and Trademark Office require payment of a fee on filing each petition to revive an abandoned application for patent based on unintentional delay or to accept an unintentionally delayed payment of a fee for issuing a patent. In this instance, the fee required by law is $810. See 37 CFR 1.27.

The petition in the above-identified application was not accompanied by payment of the required fee. No consideration on the merits can be given that petition until the required fee is received.

Further correspondence with respect to this matter should be addressed as follows:

By mail: Mail Stop PETITIONS
Commissioner for Patents
Post Office Box 1450
Alexandria, VA 22313-1450

By hand: Customer Service Window
Mail Stop Petitions
Randolph Building
401 Dulany Street
Alexandria, VA 22314

By fax: (571) 273-8300
ATTN: Office of Petitions

Any questions concerning this matter may be directed to Monica A. Graves at (571) 272-7253.

Brian W. Brown
Petitions Examiner
Office of Petitions

UNITED STATES PATENT AND TRADEMARK OFFICE

Commissioner for Patents
United States Patent and Trademark Office
P.O. Box 1450
Alexandria, VA 22313-1450
www.uspto.gov

**MAILED**

JAN 29 2010

OFFICE OF PETITIONS

**AMELIA B. YARBROUGH, PH D.**
**8613 SAPIENZA DRIVE**
**FORT WASHINGTON, MD 20744**

| | | |
|---|---|---|
| In re Application of | : | |
| **Reynaldo DIAS DE MORAES E. SILVA**, *et al.* | : | |
| Application No. 10/953,959 | : | DECISION ON PETITION |
| Filed: September 30, 2004 | : | UNDER 37 CFR 1.137(b) |
| Attorney Docket No. | : | |

This is a decision on the renewed petition under the unintentional provisions of 37 CFR 1.137(b), filed September 14, 2009, to revive the above-identified application.

The application became abandoned for failure to timely reply within the meaning of 37 CFR 1.113 to the final Office action, mailed March 26, 2008, which set a shortened statutory period for reply of three (3) months. A four (4) month extension of time under the provisions of 37 CFR 1.136(a) was obtained. Accordingly, the application became abandoned on October 26, 2008.

The petition is **DISMISSED**.

It appears the petition does not set forth petitioner's registration number.

37 CFR 1.33 (b) states that:

Amendments and other papers filed in the application must be signed by:

(1) An attorney or agent appointed in compliance with § 1.34(b);

(2) A registered attorney or agent not of record who acts in a Representative capacity under the provisions of § 1.34(a);

* * * * *

37 CFR 1.34 states:

> "When a patent practitioner acting in a representative capacity appears in person or signs a paper in practice before the United States Patent and Trademark Office in a patent case, his or her personal appearance or signature shall constitute a representation to the United States Patent and Trademark Office that under the provisions of this subchapter and the law, he or she is authorized to represent the particular party on whose behalf he or she acts. In filing such a paper, the patent practitioner must set forth his or her registration number, his or her name and signature. Further proof of authority to act in a representative capacity may be required."

Further, a grantable petition under 37 CFR 1.137(b) must be accompanied by: (1) the required reply, unless previously filed; (2) the petition fee as set forth in 37 CFR 1.17(m); (3) a statement that the entire delay in filing the required reply from the due date for the reply until the filing of a grantable petition pursuant to 37 CFR 1.137(b) was unintentional; and (4) any terminal disclaimer (and fee as set forth in 37 CFR 1.20(d)) required by 37 CFR 1.137(d). Where there is a question as to whether either the abandonment or the delay in filing a petition under 37 CFR 1.137 was unintentional, the Director may require additional information. See MPEP 711.03(c)(II)(C) and (D).

The requisite petition fee has been submitted. However, this petition does not comply with 37 CFR 1.137(b) since the petition lacks item (3).

An unsigned amendment (or other paper) or one not properly signed by a person having authority to prosecute the application is not entered. Therefore, the statement of unintentional delay in an improperly filed petition cannot be accepted.

Any request for reconsideration of this decision must be submitted within TWO (2) MONTHS from the mail date of this decision. Extensions of time under 37 CFR 1.136(a) are permitted. The reconsideration request should include a cover letter entitled "Renewed Petition under 37 CFR 1.137(b)." This is **not** a final agency action within the meaning of 5 U.S.C. § 704.

Further correspondence with respect to this matter should be addressed as follows:

By Mail: Mail Stop PETITION
Commissioner for Patents
P. O. Box 1450
Alexandria, VA 22313-1450

By hand: U. S. Patent and Trademark Office
Customer Service Window, Mail Stop Petitions
Randolph Building
401 Dulany Street
Alexandria, VA 22314

The centralized facsimile number is **(571) 273-8300.**

Telephone inquiries concerning this decision should be directed to Monica A. Graves at (571) 272-7253.

Brian W. Brown
Petitions Examiner
Office of Petitions

UNITED STATES PATENT AND TRADEMARK OFFICE

Commissioner for Patents
United States Patent and Trademark Office
P.O. Box 1450
Alexandria, VA 22313-1450
www.uspto.gov

A. Burgess Lowe
The Hoover Company
101 East Maple Street
North Canton, OH 44720

**COPY MAILED**

APR 30 2007

**OFFICE OF PETITIONS**

In re Application of :
Morgan, et al. **10/953,960** :
Application No. ~~10/953,966~~ : ON PETITION
Filed: September 28, 2004 :
Attorney Docket No. 257B

This is a decision on the petition under 37 CFR 1.137(a), filed November 16, 2006, to revive the above-identified application.

The petition is **DISMISSED AS MOOT**.

The instant petition was filed on November 16, 2006, to revive an application after an apparent failure to respond to a non-final Office action mailed July 26, 2006. A preliminary review of the petition reveals that certain identifying information, i.e, the inventor on the application, the application filing date, examiner, and title of the invention, do not match name the application serial number cited on the petition. The undersigned made an unsuccessful attempt to match the petition with the correct application serial number. The petition under 37 CFR 1.137(a) cannot be treated on its merits. Accordingly, the petition is dismissed as moot. The petition fee of $500.00 will be credited to deposit account 12-2325.

It is noted that the above-cited application is not abandoned and that the attorney of record for the above-cited application is not required to take any action. It is requested, however, that Mr. Rosenthal take immediate action to remedy the situation which may include filing a petition under 37 CFR 1.137(a) that provides correct identifiers for the application of which it concerns and requesting correction of the record.

Further correspondence with respect to this matter should be addressed as follows:

By mail: Commissioner for Patents
United States Patent and Trademark Office
Box 1450
Alexandria, VA 22313-1450

By facsimile: (571) 273-8300
Attn: Office of Petitions

Telephone inquiries should be directed to the undersigned (571) 272-3222.

Kenya A. McLaughlin
Petitions Attorney
Office of Petitions

Cc:
Eugene J. Rosenthal
Docket Administrator (Room 3J-219)
Lucent Technologies, Inc.
101 Crawfords Corner Road
Holmdel, NJ 07733-3030

UNITED STATES PATENT AND TRADEMARK OFFICE

Commissioner for Patents
United States Patent and Trademark Office
P.O. Box 1450
Alexandria, VA 22313-1450
www.uspto.gov

Paper No.

Lucent Technologies Inc.
Docket Administrator - Room 3J-219
101 Crawfords Corner Road
Holmdel NJ 07733-3030

COPY MAILED

FEB 06 2008

OFFICE OF PETITIONS

| | | |
|---|---|---|
| In re Application of | : | |
| Dennis Greywall | : | DECISION ON PETITION |
| Application No. 10/953,960 | : | |
| Filed: September 29, 2004 | : | |
| Atty Docket No. MEMS MIRROR | : | |
| WITH TIP OR PISTON MOTION FOR | : | |
| USE IN ADAPTIVE OPTICS | : | |

This is a decision on the PETITION FOR REVIVAL OF AN APPLICATION FOR PATENT ABANDONED UNINTENTIONALLY UNDER 37 C.F.R. 1.137(a) filed November 16, 2006, in the above-identified application. This also responds to the SECOND PETITION FOR REVIVAL OF AN APPLICATION FOR PATENT ABANDONED UNAVOIDABLY UNDER 37 C.F. R. 1.137(a) filed April 13, 2007.

The petition is **GRANTED**.

The above-identified application became abandoned for failure to timely file corrected drawings in response to the NOTICE OF DRAWING INCONSISTENCY WITH SPECIFICATION mailed July 26, 2006. This Notice set a ONE (1) MONTH non-extendable time period for reply. No proper reply having been received and no extensions of time obtainable, the application became abandoned effective August 27, 2006. A Notice of Abandonment was mailed on October 3, 2006.

In response, applicants timely filed the first petition. As the petition was directed to an incorrect application number and that application was not abandoned, by decision mailed April 30, 2007, the petition was dismissed as moot. A courtesy copy of the decision was sent to the attorney who filed the petition

advising of the need to file a petition with the correct application number.

Petitioner maintains that the entire delay in filing the required reply from the due date of the reply until the filing of a grantable petition was unavoidable. On first petition, petitioner submits their USPTO auto-reply facsimile transmission acknowledging timely receipt of petitioner's response. On second petition, petitioner acknowledges their error in filing the papers (including the first petition) with the wrong application number (but the remaining identifiers correctly set forth).

The instant petition meets the requirements of 37 CFR 1.137(a). The required reply in the form of an amendment to make the drawings consistent with the specification was previously submitted[1] on August 3, 2006[2]. On petition, petitioners have submitted payment of the petition fee and a showing of unavoidable delay. No terminal disclaimer is required. The facts and circumstances of the abandonment as set forth on petition have been considered, and it is concluded that petitioner has met his burden of establishing that the entire delay from the due date for the reply until the filing of a grantable petition was unavoidable.

The Office of Patent Publication has been advised of this decision. The application is, thereby, forwarded to Publications for consideration of the response to the NOTICE OF DRAWING INCONSISTENCY, an amendment to the specification filed August 3, 2006 (and resubmitted November 16, 2006), and in light thereof, for processing into a patent.

Telephone inquiries related to this decision may be directed to the undersigned at (571) 272-3219.

Nancy Johnson
Senior Petitions Attorney
Office of Petitions

---

[1] It is unclear when applicants' error in identifying the application to which the amendment was directed was discovered and the papers placed in this application.

[2] The Issue Fee was timely paid on June 1, 2006.

UNITED STATES PATENT AND TRADEMARK OFFICE

Commissioner for Patents
United States Patent and Trademark Office
P.O. Box 1450
Alexandria, VA 22313-1450
www.uspto.gov

**NEXSEN PRUET ADAMS KLEEMEIER, LLC**
**PO DRAWER 2426**
**COLUMBIA SC 29202-2426**

COPY MAILED
OCT 24 2006
OFFICE OF PETITIONS

| | | |
|---|---|---|
| In re Application of | : | |
| **HOWARD**, et al. | : | |
| Application No. 10/953,965 | : | DECISION ON PETITION |
| Filed: September 29, 2004 | : | TO MAKE SPECIAL UNDER |
| Attorney Docket No. 29676-36 | : | 37 CFR 1.102(c)(1) |
| | : | |

This is a decision on the petition under 37 CFR 1.102(c)(1), filed September 1, 2006, to make the above-identified application special based on applicant's age as set forth in M.P.E.P. § 708.02, Section IV.

The petition is **GRANTED**.

A grantable petition to make an application special under 37 CFR 1.102(c)(1) and MPEP § 708.02, Section IV: Applicant's Age, must be accompanied by evidence showing that at least one of the applicants is 65 years of age, or more, such as a birth certificate or a statement by applicant. No fee is required.

The instant petition includes an affidavit from Durrell U. Howard attesting to his age. Accordingly, the above-identified application has been accorded "special" status.

Telephone inquiries concerning this decision should be directed to Monica A. Graves at 571-272-7253.

All other inquiries concerning either the examination or status of the application should be directed to the Technology Center.

The application is being forwarded to the Technology Center Art Unit 3616 for action on the merits commensurate with this decision.

David Bucci
Petitions Examiner
Office of Petitions

UNITED STATES PATENT AND TRADEMARK OFFICE

Commissioner for Patents
United States Patent and Trademark Office
P.O. Box 1450
Alexandria, VA 22313-1450
www.uspto.gov

Roy W. Martin
1440 Palmer
Downers Grove IL 60516

**COPY MAILED**

JAN 0 4 2008

**OFFICE OF PETITIONS**

In re Application of :
Perry Martin, et al. :
Application No. 10/953,967 : ON PETITION
Filed: September 28, 2004 :
Attorney Docket No. TOX-07-1160R2-CIP

This is a decision on the petition under 37 CFR 1.181(a) to withdraw the holding of abandonment, filed December 11, 2007.

The petition under 37 CFR 1.181(a) is **DISMISSED**.

The above-identified application became abandoned for failure to reply to the Notice of Allowance and Issue Fee Due mailed August 9, 2007. The notice set a statutory period for reply of three months from its mailing date. No response was received within the allowable period, and the application became abandoned on November 10, 2007. A Notice of Abandonment was mailed on December 5, 2007.

Petitioner maintains that the notice was never received and that the holding of abandonment should be withdrawn, accordingly.

A review of the application file and the Office computer records reveals that on August 9, 2007, (the date the notice was mailed), the address of record was that of DLA Piper, LLP, in Philadelphia, Pennsylvania. The notice was mailed to this address and was not returned to the USPTO as undeliverable. On November 1, 2007, the correspondence address for the application was changed. Petitioner argues that the holding of abandonment should be withdrawn because the notice was not received at the offices of DLA Piper, LLP.

Petitioner's argument is not persuasive. When, as in this case petitioner is arguing that an Office communication was not received, petitioner must establish non-receipt of the Office communication in accordance with section 711.03(c) of the *Manual of Patent Examining Procedure* that requires the following:

> [t]he showing requires to establish non-receipt of an Office communication must include a statement from the practitioner stating that the Office communication was not received by the practitioner and attesting to the fact that a search of the file jacket and docket records indicates that the Office communication was not received. A copy of the docket record where the non-received Office communication would have been entered had it been received and docketed must be attached to and referenced in practitioner's statement.

The showing made in the instant petition is insufficient. A successful petition to withdraw the holding of abandonment under the circumstances presented would indicate that a search of the file jacked and docket

records of DLA Piper indicates that the Office communication was not received. The petition must also be accompanied by a copy of the relevant docket records as maintained by DLA Piper.

Alternatively, petitioner may revive the application based on unintentional abandonment under 37 CFR 1.137(b). A grantable petition pursuant to 37 CFR 1.137(b) must be accompanied by the required reply, the required petition fee ($1,540.00 for a large entity and $770.00 for a verified small entity), and a statement that the **entire** delay in filing the required reply from the due date for the reply until the filing of a grantable petition pursuant to 37 CFR 1.137(b) was unintentional.

It is noted that a representative of the purported assignee of the application signs the instant petition. In order to take action in an application, an assignee must file a certificate under 37 CFR 3.73(b) empowering the assignee to take action in the application. Any further petitions filed should be accompanied by a certificate under 37 CFR 3.73(b) if signed by the assignee, or be signed all joint inventors, or by a registered practitioner.

Further correspondence with respect to this matter should be addressed as follows:

By mail: Commissioner for Patents
United States Patent and Trademark Office
Box 1450
Alexandria, VA 22313-1450

By facsimile: (571) 273-8300
Attn: Office of Petitions

Telephone inquiries regarding this decision should be directed to the undersigned (571) 272-3222.

Kenya A. McLaughlin
Petitions Attorney
Office of Petitions

UNITED STATES PATENT AND TRADEMARK OFFICE

Commissioner for Patents
United States Patent and Trademark Office
P.O. Box 1450
Alexandria, VA 22313-1450
www.uspto.gov

Roy W. Martin
1440 Palmer
Downers Grove, IL 60516

COPY MAILED

FEB 15 2008

OFFICE OF PETITIONS

In re Application of

Perry Martin, et al.

Application No. 10/953,967

Filed: September 28, 2004

Attorney Docket No. TOX-07-1160R2-CIP

DECISION ON PETITION

This is a decision on the petition under 37 CFR §1.137(b), January 18, 2008, to revive the above-identified application.

The petition is **dismissed**.

Any request for reconsideration of this decision must be submitted within TWO (2) MONTHS from the mail date of this decision. Extensions of time under 37 CFR 1.136(a) are permitted. The reconsideration request should include a cover letter entitled "Renewed Petition" under 37 CFR 1.137(b)."

This application became abandoned for failure to file a proper and timely response to the Notice of Allowance and Issue Fee Due mailed August 9, 2007, which set a shortened statutory period for reply of three-months from its mailing date. The application became abandoned on November 10, 2007. A Notice of Abandonment was mailed December 5, 2007.

Effective December 1, 1997, the provisions of 37 CFR 1.137(b) now provide that where the delay in reply was unintentional, a petition may be filed to revive an abandoned application or a lapsed patent pursuant to 37 CFR 1.137(b). A grantable petition pursuant to 37 CFR 1.137(b) must be accompanied by:

(1) the required reply, unless previously filed. In a non-provisional application abandoned for failure to prosecute, the required reply may be met by the filing of a continuing application. In an application or patent, abandoned or lapsed for failure to pay the issue fee, or any portion thereof, the required reply must be the payment of the issue fee or any outstanding balance thereof.

(2) the petition fee as set forth in 37 CFR 1.17(m);

(3) a statement that the entire delay in filing the required reply from the due date for the reply until the filing of a grantable petition pursuant to 37 CFR 1.137(b) was unintentional. The Commissioner may require additional information where there is a question whether the delay was unintentional; and

(4) any terminal disclaimer (and fee set forth in 37 CFR 1.20(d)) required pursuant to 37 CFR 1.137(c).

The petition does not satisfy items (1) and (3) above.

As to item (1), the issue fee is $720.00 for a small entity and $1540.00 for a large entity. The petition was accompanied by a payment of $1770.00, which was earmarked in the following way: $770.00 for the petition fee, $300.00 for the publication fee, with $700.00 remaining. The issue fee is $720.00, however. The renewed petition must accompanied by an additional $20.00 in satisfaction of the issue fee payment.

As to item (3), the statement of unintentional delay is not acceptable because has not been made by all of the appropriate parties of interest. The subject application names two joint inventors, no attorney of record, and does not currently have an assignee of record that is empowered to take action in the application by virtue of a certificate under 37 CFR 3.73(b). The renewed petition must either signed by both joint inventors, an attorney registered with the USPTO, or an assignee of record that is empowered to take action in the application virtue of a certificate under 37 CFR 3.73(b). A certificate under 37 CFR 3.73(b) enclosed.

Further correspondence with respect to this matter should be addressed as follows:

By mail: Commissioner for Patents
United States Patent and Trademark Office
Box 1450
Alexandria, VA 22313-1450

By facsimile: (571) 273-8300
Attn: Office of Petitions

Telephone inquiries concerning this decision may be directed to the undersigned at (571) 272-3222.

Kenya A. McLaughlin
Petitions Attorney
Office of Petitions

Enclosure: Form PTO/SB/96

PTO/SB/96 (01-08)
Approved for use through 02/29/2008. OMB 0651-0031
U.S. Patent and Trademark Office; U.S. DEPARTMENT OF COMMERCE
Under the Paperwork Reduction Act of 1995, no persons are required to respond to a collection of information unless it displays a valid OMB control number.

# STATEMENT UNDER 37 CFR 3.73(b)

Applicant/Patent Owner: _____

Application No./Patent No.: _____ Filed/Issue Date: _____

Entitled:

_____, a _____
(Name of Assignee) (Type of Assignee, e.g., corporation, partnership, university, government agency, etc.)

states that it is:

1. ☐ the assignee of the entire right, title, and interest; or

2. ☐ an assignee of less than the entire right, title and interest
(The extent (by percentage) of its ownership interest is _____%)

in the patent application/patent identified above by virtue of either:

A. ☐ An assignment from the inventor(s) of the patent application/patent identified above. The assignment was recorded in the United States Patent and Trademark Office at Reel _____, Frame _____, or for which a copy thereof is attached.

**OR**

B. ☐ A chain of title from the inventor(s), of the patent application/patent identified above, to the current assignee as follows:

1. From: _____ To: _____
The document was recorded in the United States Patent and Trademark Office at
Reel _____, Frame _____, or for which a copy thereof is attached.

2. From: _____ To: _____
The document was recorded in the United States Patent and Trademark Office at
Reel _____, Frame _____, or for which a copy thereof is attached.

3. From: _____ To: _____
The document was recorded in the United States Patent and Trademark Office at
Reel _____, Frame _____, or for which a copy thereof is attached.

☐ Additional documents in the chain of title are listed on a supplemental sheet.

☐ As required by 37 CFR 3.73(b)(1)(i), the documentary evidence of the chain of title from the original owner to the assignee was, or concurrently is being, submitted for recordation pursuant to 37 CFR 3.11.

[NOTE: A separate copy (*i.e.,* a true copy of the original assignment document(s)) must be submitted to Assignment Division in accordance with 37 CFR Part 3, to record the assignment in the records of the USPTO. See MPEP 302.08]

The undersigned (whose title is supplied below) is authorized to act on behalf of the assignee.

| | |
|---|---|
| Signature | Date |
| Printed or Typed Name | Telephone Number |
| Title | |

This collection of information is required by 37 CFR 3.73(b). The information is required to obtain or retain a benefit by the public which is to file (and by the USPTO to process) an application. Confidentiality is governed by 35 U.S.C. 122 and 37 CFR 1.11 and 1.14. This collection is estimated to take 12 minutes to complete, including gathering, preparing, and submitting the completed application form to the USPTO. Time will vary depending upon the individual case. Any comments on the amount of time you require to complete this form and/or suggestions for reducing this burden, should be sent to the Chief Information Officer, U.S. Patent and Trademark Office, U.S. Department of Commerce, P.O. Box 1450, Alexandria, VA 22313-1450. DO NOT SEND FEES OR COMPLETED FORMS TO THIS ADDRESS. **SEND TO: Commissioner for Patents, P.O. Box 1450, Alexandria, VA 22313-1450.**

*If you need assistance in completing the form, call 1-800-PTO-9199 and select option 2.*

# Privacy Act Statement

The **Privacy Act of 1974 (P.L. 93-579)** requires that you be given certain information in connection with your submission of the attached form related to a patent application or patent. Accordingly, pursuant to the requirements of the Act, please be advised that: (1) the general authority for the collection of this information is 35 U.S.C. 2(b)(2); (2) furnishing of the information solicited is voluntary; and (3) the principal purpose for which the information is used by the U.S. Patent and Trademark Office is to process and/or examine your submission related to a patent application or patent. If you do not furnish the requested information, the U.S. Patent and Trademark Office may not be able to process and/or examine your submission, which may result in termination of proceedings or abandonment of the application or expiration of the patent.

The information provided by you in this form will be subject to the following routine uses:

1. The information on this form will be treated confidentially to the extent allowed under the Freedom of Information Act (5 U.S.C. 552) and the Privacy Act (5 U.S.C 552a). Records from this system of records may be disclosed to the Department of Justice to determine whether disclosure of these records is required by the Freedom of Information Act.
2. A record from this system of records may be disclosed, as a routine use, in the course of presenting evidence to a court, magistrate, or administrative tribunal, including disclosures to opposing counsel in the course of settlement negotiations.
3. A record in this system of records may be disclosed, as a routine use, to a Member of Congress submitting a request involving an individual, to whom the record pertains, when the individual has requested assistance from the Member with respect to the subject matter of the record.
4. A record in this system of records may be disclosed, as a routine use, to a contractor of the Agency having need for the information in order to perform a contract. Recipients of information shall be required to comply with the requirements of the Privacy Act of 1974, as amended, pursuant to 5 U.S.C. 552a(m).
5. A record related to an International Application filed under the Patent Cooperation Treaty in this system of records may be disclosed, as a routine use, to the International Bureau of the World Intellectual Property Organization, pursuant to the Patent Cooperation Treaty.
6. A record in this system of records may be disclosed, as a routine use, to another federal agency for purposes of National Security review (35 U.S.C. 181) and for review pursuant to the Atomic Energy Act (42 U.S.C. 218(c)).
7. A record from this system of records may be disclosed, as a routine use, to the Administrator, General Services, or his/her designee, during an inspection of records conducted by GSA as part of that agency's responsibility to recommend improvements in records management practices and programs, under authority of 44 U.S.C. 2904 and 2906. Such disclosure shall be made in accordance with the GSA regulations governing inspection of records for this purpose, and any other relevant (*i.e.*, GSA or Commerce) directive. Such disclosure shall not be used to make determinations about individuals.
8. A record from this system of records may be disclosed, as a routine use, to the public after either publication of the application pursuant to 35 U.S.C. 122(b) or issuance of a patent pursuant to 35 U.S.C. 151. Further, a record may be disclosed, subject to the limitations of 37 CFR 1.14, as a routine use, to the public if the record was filed in an application which became abandoned or in which the proceedings were terminated and which application is referenced by either a published application, an application open to public inspection or an issued patent.
9. A record from this system of records may be disclosed, as a routine use, to a Federal, State, or local law enforcement agency, if the USPTO becomes aware of a violation or potential violation of law or regulation.

UNITED STATES PATENT AND TRADEMARK OFFICE

Commissioner for Patents
United States Patent and Trademark Office
P.O. Box 1450
Alexandria, VA 22313-1450
www.uspto.gov

Roy W. Martin
1440 Palmer
Downers Grove, IL 60516

COPY MAILED

MAY 09 2008

OFFICE OF PETITIONS

In re Application of

Perry Martin, et al.

Application No. 10/953,967

Filed: September 28, 2004

Attorney Docket No. TOX-07-1160R2-CIP

DECISION ON PETITION

This is a decision on the renewed petition under 37 CFR §1.137(b), February 26, 2008, to revive the above-identified application.

The renewed petition is **granted**.

This application became abandoned for failure to file a proper and timely response to the Notice of Allowance and Issue Fee Due mailed August 9, 2007, which set a shortened statutory period for reply of three-months from its mailing date. The application became abandoned on November 10, 2007. A Notice of Abandonment was mailed December 5, 2007. A petition under 37 CFR 1.137(b) was first filed January 18, 2008, and dismissed by decision mailed February 15, 2008.

The remainder of the issue fee payment in the amount of $20.00 is noted.

The application file is being directed to the Office of Data Management for further processing.

Telephone inquiries concerning this decision may be directed to the undersigned at (571) 272-3222.

Kenya A. McLaughlin
Petitions Attorney
Office of Petitions

UNITED STATES PATENT AND TRADEMARK OFFICE

Commissioner for Patents
United States Patent and Trademark Office
P.O. Box 1450
Alexandria, VA 22313-1450
www.uspto.gov

**Donald James Henderson**
**3021 W. Fieldstream Drive**
**Meridian, ID 83642**

COPY MAILED

MAY 17 2007

OFFICE OF PETITIONS

| | | |
|---|---|---|
| In re Application of | : | |
| Donald James Henderson | : | |
| Application No. 10/953,977 | : | DECISION ON PETITION |
| Filed: September 29, 2004 | : | TO MAKE SPECIAL UNDER |
| Attorney Docket No. | : | 37 CFR 1.102(c)(1) |
| | : | |

This is a decision on the petition under 37 CFR 1.102(c)(1), filed April 11, 2007, to make the above-identified application special based on applicant's age as set forth in M.P.E.P. § 708.02, Section IV.

The petition is **GRANTED**.

A grantable petition to make an application special under 37 CFR 1.102(c)(1) and MPEP § 708.02, Section IV: Applicant's Age must be accompanied by evidence showing that at least one of the applicants is 65 years of age, or more, such as a birth certificate or a statement by applicant. No fee is required

The instant petition includes a signed declaration and a photocopy of a driver's license. Accordingly, the above-identified application has been accorded "special" status.

Telephone inquiries concerning this decision should be directed to Kimberly Inabinet at 571-272-4618.

All other inquiries concerning either the examination or status of the application should be directed to the Technology Center.

The application is being forwarded to the Technology Center Art Unit 3753 action on the merits commensurate with this decision.

Frances Hicks

Frances Hicks
Petitions Examiner
Office of Petitions

UNITED STATES PATENT AND TRADEMARK OFFICE

Commissioner for Patents
United States Patent and Trademark Office
P.O. Box 1450
Alexandria, VA 22313-1450
www.uspto.gov

CV THERAPEUTICS, INC.
3172 PORTER DRIVE
PALO ALTO CA 94304

**COPY MAILED**

MAR 15 2007

**OFFICE OF PETITIONS**

| | | |
|---|---|---|
| In re Application of | : | |
| Wolff, et al. | : | |
| Application No. 10/953,981 | : | DECISION DISMISSING PETITIONS |
| Filed: Septemer 29, 2004 | : | UNDER 37 CFR 1.78(a)(3) AND (a)(6) |
| Attorney Docket No. Bia-1-CON | : | |

This is a decision on the petition under 37 CFR §§ 1.78(a)(3) and 1.78(a)(6), filed March 17, 2006, to accept an unintentionally delayed claim under 35 U.S.C. §§ 120, 365(c), and 119(e) for the benefit of priority to the prior-filed nonprovisional and provisional applications set forth in the concurrently filed amendment.

The petition is **DISMISSED**

A petition for acceptance of a claim for late priority under 37 CFR §§ 1.78(a)(3) and 1.78(a)(6) is only applicable to those applications filed on or after November 29, 2000 and after the expiration of the period specified in 37 CFR §§ 1.78(a)(2)(ii) and 1.78(a)(5)(ii). In addition, the petition under 37 CFR §§ 1.78(a)(3) and 1.78(a)(6) must be accompanied by:

**(1)** the reference required by 35 U.S.C. §§ 120 and 119(e) and 37 CFR §§ 1.78(a)(2)(i) and 1.78(a)(5)(i) of the prior-filed application, unless previously submitted;

**(2)** the surcharge set forth in § 1.17(t); and

**(3)** a statement that the entire delay between the date the claim was due under 37 CFR §§ 1.78(a)(2)(ii) and 1.78(a)(5)(ii) and the date the claim was filed was unintentional. The Director may require additional where there is a question whether the delay was unintentional.

The petition does not comply with item (1).

37 CFR 1.78(a)(2)(i) requires that any nonprovisional application claiming the benefit of one or more prior-filed copending nonprovisional applications must contain or be amended to contain a

reference to each such prior-filed application, identifying it by application number (consisting of the series code and serial number) and indicating the relationship of the applications. The relationship between the applications is whether the subject application is a continuation, divisional, or continuation-in-part of a prior-filed nonprovisional application. An example of a proper benefit claim is: "This application is a continuation of Application No. 10/---, filed---." A benefit claim that merely states: "This application claims the benefit of Application No. 10/---, filed---," does not comply with 37 CFR 1.78(a)(2)(i) since the proper relationship, which includes the type of continuing application, is not stated. Also, the status of each nonprovisional parent application (if it is patented or abandoned) should also be indicated, following the filing date of the parent nonprovisional application. *See* MPEP Section 201.11, Reference to Prior Nonprovisional Applications. The amendment fails to comply with the provisions of 37 CFR 1.78(a)(2)(i) and is therefore unacceptable.

Before the petition under 37 CFR §§ 1.78(a)(3) and 1.78(a)(6) can be granted, a renewed petition and either an Application Data Sheet or a substitute amendment (complying with the provisions of 37 CFR 1.121 and 37 CFR 1.76(b)(5)) to correct the above matters are required.

Further correspondence with respect to this matter should be addressed as follows:

By mail: Mail Stop PETITIONS
Commissioner for Patents
Post Office Box 1450
Alexandria, VA 22313-1450

By hand: Customer Service Window
Mail Stop Petitions
Randolph Building
401 Dulany Street
Alexandria, VA 22314

By fax: (571) 273-8300
ATTN: Office of Petitions

Any questions concerning this matter may be directed to Petitions Attorney Alesia M. Brown at (571) 272-3205.

Christina L Donnell

Frances Hicks
Lead Petitions Examiner
Office of Petitions

UNITED STATES PATENT AND TRADEMARK OFFICE

Commissioner for Patents
United States Patent and Trademark Office
P.O. Box 1450
Alexandria, VA 22313-1450
www.uspto.gov

ARTHUR M. PESLAK, ESQ.
MANDEL & PISLAK, LLC
SUITE 5
80 SCENIC DRIVE
FREEHOLD NJ 07728

**MAIL**

SEP 2 2 2005

DIRECTOR OFFICE
TECHNOLOGY CENTER 2600

In re Application of
Paul Abbruscato
Application No. 10/953,986
Filed: September 29, 2004
For: DIRECTION FINDER AND LOCATOR

DECISION ON PETITION
TO MAKE SPECIAL

This is a decision on the petition under 37 C.F.R. §1.102 to make special filed September 29, 2004 which is considered as pursuant to MPEP §708.02 (IV), applicant's age.

A petition to make special under MPEP §708.02, IV, must show that petitioner is 65 years of age, or more. Acceptable evidence includes a birth certificate, copy of a driver's license, or simply a statement by the applicant. No fee is required.

The petition includes a copy of the Birth Certificate for Paul Abbruscato evidencing that he is over 65 years of age.

Accordingly, the petition is **GRANTED**.

The application will retain its special status throughout its entire prosecution, including any appeal to the Board of Patent Appeals and Interferences, subject only to diligent prosecution by the applicant.

The application is being forwarded to the examiner for expedited prosecution.

Kenneth A. Wieder
Special Program Examiner
Technology Center 2600
Communications
(571) 272-2986

UNITED STATES PATENT AND TRADEMARK OFFICE

Commissioner for Patents
United States Patent and Trademark Office
P.O. Box 1450
Alexandria, VA 22313-1450
www.uspto.gov

BEMIS COMPANY, INC.
Patent and Trademark Department
2200 BADGER AVENUE
OSHKOSH WI 54904

COPY MAILED

SEP 22 2008

OFFICE OF PETITIONS

| | | |
|---|---|---|
| In re Application of: | : | |
| Nelson et al.[1] | : | |
| Application No. 10/953987 | : | DECISION DISMISSING |
| Filing or 371(c) Date: 09/29/2004 | : | PETITION UNDER |
| Attorney Docket Number: 20726 | : | 37 CFR § 1.183 |

This Decision is in response to the "Petition Under 37 C.F.R. § 1.47 for a Non-Signing Inventor, filed July 24, 2008. The petition is properly treated under 37 CFR 1.183, to waive the rules requiring the signature of all Inventors for a declaration of inventorship under 37 C.F.R. § 1.131.

The petition is **dismissed**.

The application as-filed identified four inventors: Kevin P. Nelson, Andrea M. Schnell, Richard R. Bellile and Christopher J. Harvey. Applicant filed a petition under 37 CFR 1.48(b) to delete inventors: Kevin P. Nelson, Andrea M. Schnell and Christopher J. Harvey. Applicant files the present petition to allow acceptance of a Declaration under 37 CFR 1.131, executed by Curwood, Inc., on behalf of inventor Bellile.

In support of the petition, Applicant avers that inventor Bellile was sent a letter to inventor Bellile at his last known address requesting his review and signature of the Declaration under 37 CFR 1.131. A second letter was sent on July 16, 2008, but inventor Bellile refused to sign and return the document.

A review of the copy of the first letter sent to inventor Bellile reveals that the letter included a copy of the Declaration only. A review of the copy of the second letter sent to inventor reveals that it included a copy of "unedited pages from [his] Curwood laboratory notebook."

Applicant has also included a copy of an Assignment executed by inventor Bellile to Curwood, Inc.

[1] It is noted that Applicant has filed a petition to correct the inventorship in the present application; however, the petition has not been acted upon and the inventive entity thus remains as that originally filed.

Applicable Law, Rules and MPEP

The MPEP 715.04, Swearing back of Reference, Affidavit or Declarant Under 37 CFR 1.131, provides

> The following parties may make an affidavit or declaration under 37 CFR 1.131:
> (A) All the inventors of the subject matter claimed.
> (B) An affidavit or declaration by less than all named inventors of an application is accepted where it is shown that less than all named inventors of an application invented the subject matter of the claim or claims under rejection. For example, one of two joint inventors is accepted where it is shown that one of the joint inventors is the sole inventor of the claim or claims under rejection.
> (C) If a petition under 37 CFR 1.47 was granted or the application was accepted under 37 CFR 1.42 or 1.43, the affidavit or declaration may be signed by the 37 CFR 1.47 applicant or the legal representative, where appropriate.
> (D) The assignee or other party in interest when it is not possible to produce the affidavit or declaration of the inventor. Ex parte Foster, 1903 C.D. 213, 105 O.G. 261 (Comm'r Pat. 1903).
>
> Affidavits or declarations to overcome a rejection of a claim or claims must be made by the inventor or inventors of the subject matter of the rejected claim(s), a party qualified under 37 CFR 1.42, 1.43, or 1.47, or the assignee or other party in interest when it is not possible to produce the affidavit or declaration of the inventor(s). Thus, where all of the named inventors of a pending application are not inventors of every claim of the application, any affidavit under 37 CFR 1.131 could be signed by only the inventor(s) of the subject matter of the rejected claims.
> Where one or more of the named inventors of the subject matter of the rejected claim(s) (who had originally signed the oath or declaration for patent application under 37 CFR 1.63) is now unavailable to sign an affidavit or declaration under 37 CFR 1.131, the affidavit or declaration under 37 CFR 1.131 may be signed by the remaining joint inventors provided a petition under 37 CFR 1.183 requesting waiver of the signature of the unavailable inventor be submitted with the affidavit or declaration under 37 CFR 1.131. Proof that the non-signing inventor is unavailable or cannot be found similar to the proof required for a petition under 37 CFR 1.47 must be submitted with the petition under 37 CFR 1.183 (see MPEP § 409.03(d)). Petitions under 37 CFR 1.183 are decided by the Office of Petitions (see MPEP § 1002.02(b)).

This section states that a party qualified under 37 CFR 1.42, 1.43 or 1.47 may make the affidavit when it is not possible to produce the affidavit or declaration of the inventor, and that waiver of the signature requirement of the unavailable inventor may be demonstrated by proof similar to that required in a petition under 37 CFR 1.47..

In discussing waiver requirements under 37 CFR 1.183, the Office is guided by proof similar to that required when an Applicant is unavailable. In this instance, Applicant asserts 1) that the sole inventor is inventor Bellile, and 2) inventor Bellile refuses to join in the application. As such, the applicable rule is 37 CFR 1.47(b).

A grantable petition under 37 CFR 1.47(b) requires: (1) proof that the non-signing inventor cannot be reached or refuses to sign the oath or declaration after having been presented with the application papers (specification, claims and drawings); (2) an acceptable oath or declaration in compliance with 35 U.S.C. §§ 115 and 116; (3) the petition fee; (4) a statement of the last known address of the non-signing inventor(s); (5) proof of proprietary interest; and (6) proof of irreparable harm. Applicant lacks items (1), (2), and (6) as set forth above.

As to item (1), the MPEP provides:

> A refusal by an inventor to sign an oath or declaration when the inventor has not been presented with the application papers does not itself suggest that the inventor is refusing to join the application unless it is clear that the inventor understands exactly what he or she is being asked to sign and refuses to accept the application papers. A copy of the application papers should be sent to the last known address of the non-signing inventor, or, if the nonsigning inventor is represented by counsel, to the address of the nonsigning inventor's attorney. The fact that an application may contain proprietary information does not relieve the 37 CFR 1.47 applicant of the responsibility to present the application papers to the inventor if the inventor is willing to receive the papers in order to sign the oath or declaration.

MPEP 409.03(d).

Analysis

Applicant has not presented evidence that a copy of the application papers were sent to the last known address of the non-signing inventor. Absent an express refusal to join in the application, Applicant must present a copy of the application papers to the nonsigning inventor. The MPEP further provides

> Proof that a bona fide attempt was made to present a copy of the application papers (specification, including claims, drawings, and oath or declaration) to the nonsigning inventor for signature, but the inventor refused to accept delivery of the papers or expressly stated that the application papers should not be sent, may be sufficient. When there is an express oral refusal, that fact along with the time and place of the refusal must be stated in the statement of facts. When there is an express written refusal, a copy of the document evidencing that refusal must be made part of the statement of facts. The document may be redacted to remove material not related to the inventor's reasons for refusal.

MPEP 409.03(d).

Applicant avers that the application, claims 55-71, represent subject matter of the sole invention of inventor Bellile; however, inventor Bellile has not been presented with the application as presently amendmed, but has only been presented with a Declaration and a copy of his lab notebook.

A copy of the application, along with the Declaration, should be sent to inventor Bellile so that it is clear that the inventor understands exactly what he or she is being asked to sign.

As to item (2), the oath/declaration is executed by Attorney Tom Hall as agent for Curwood, and Attorney Hall states in the petition that he is an authorized representative of Curwood, Inc., however, there is no proof that Curwood Inc., has given Attorney Hall authority to act on behalf of Curwood, Inc.

The MPEP provides the following:

> The 37 CFR 1.47(b) applicant must make the oath required by 37 CFR 1.63 and 1.64 or 1.175. Where a corporation is the 37 CFR 1.47(b) applicant, an officer (President, Vice-President, Secretary, Treasurer, or Chief Executive Officer) thereof should normally sign the necessary oath or declaration. A corporation may authorize any person, including an attorney or agent registered to practice before the U.S. Patent and Trademark Office, to sign the application oath or declaration on its behalf. Where an oath or declaration is signed by a registered attorney or agent on behalf of a corporation, either proof of the attorney's or agent's authority in the form of a statement signed by an appropriate corporate officer must be submitted, or the attorney or agent may simply state that he or she is *authorized to sign* on behalf of the corporation. Where the oath or declaration is being signed on behalf of an assignee, see MPEP § 324. An inventor may not authorize another individual to act as his or her agent to sign the application oath or declaration on his or her behalf. Staeger v. Commissioner, 189 USPQ 272 (D.D.C. 1976), In re Striker, 182 USPQ 507 (Comm'r Pat. 1973). Where an application is executed by one other than the inventor, the declaration required by 37 CFR 1.63 must state the full name, residence, post office address, and citizenship of the nonsigning inventor. Also, the title or position of the person signing must be stated if signing on behalf of a corporation under 37 CFR 1.47(b). (Emphasis supplied).

It is noted that the Declaration is signed by Attorney Tom Hall for Curwood, Inc; however, proof of Attorney Hall's authority to act on behalf of Curwood is required.

As to item (6), irreparable damage may be established by a showing (a statement) that the filing of the Declaration is necessary to preserve the rights of the party or to prevent irreparable damage. See, MPEP 409.03(g).

Further correspondence with respect to this matter should be addressed as follows:

By mail: Mail Stop PETITIONS
Director for Patents
PO Box 1450
Alexandria, VA 22313-1450

By FAX: (571) 273-8300
Attn: Office of Petitions

By hand: Customer Service Window
Randolph Building
401 Dulany Street
Alexandria, VA 22314

Telephone inquiries concerning this matter should be directed to the undersigned at (571) 272-3232.

/Derek L. Woods/
Derek L. Woods
Attorney
Office of Petitions

UNITED STATES PATENT AND TRADEMARK OFFICE

Commissioner for Patents
United States Patent and Trademark Office
P.O. Box 1450
Alexandria, VA 22313-1450
www.uspto.gov

**PAUL J WHITE, SENIOR COUNSEL**
**NATIONAL RENEWABLE ENERGY LABORATORY (NREL)**
**1617 COLE BOULEVARD**
**GOLDEN CO 80401-3393**

COPY MAILED

JAN 11 2008

OFFICE OF PETITIONS

| | | |
|---|---|---|
| In re Application of | : | |
| Lee Jay Fingersh | : | |
| Application No. 10/953,995 | : | ON PETITION |
| Filed: September 29, 2004 | : | |
| Attorney Docket No. NREL 04-01 | : | |

This is a decision on the petition under 37 CFR 1.137(b), filed February 16, 2007, to revive the above-identified application.

The petition is **GRANTED**.

The application became abandoned for failure to reply in a timely manner to the Restriction Requirement, mailed March 20, 2006, which set a shortened statutory period for reply of one (1) month or thirty (30) days (whichever is later). No extensions of time under the provisions of 37 CFR 1.136(a) was obtained. Accordingly, the application became abandoned on April 21, 2006.

The petition satisfies the requirements of 37 CFR 1.137(b) in that petitioner has supplied (1) the reply in the form of an amendment; (2) the petition fee of $750; and (3) an adequate statement of unintentional delay.

Telephone inquiries concerning this decision should be directed to Terri Williams at (571) 272-2991.

The application file is being referred to Technology Center AU 2834 for appropriate action the concurrently filed amendment.

Liana Walsh
Petitions Examiner
Office of Petitions

## SPE RESPONSE FOR CERTIFICATE OF CORRECTION

DATE : 6/9/08

Paper No.: —

TO SPE OF : ART UNIT 1791

SUBJECT : Request for Certificate of Correction for Appl. No.: 10/953998 Patent No: 7344618 B2

A response is requested with respect to a request for a certificate of correction.

With respect to the change(s) requested to correct Office and/or Applicant's errors, should the patent read as shown in the certificate of correction attached herewith or the COCIN document(s), in IFW images for the above-identified patented application? No new matter should be introduced, nor should the scope or meaning of the claims be changed.

If the response is for an IFW, within 7 days, please complete and forward the response, to the employee (named below) via scanning into application images, using document code **COCX**.

If the response is for a paper file wrapper, please complete the response and forward the response with the paper file wrapper, to the employee (named below), within 7 days, to:

**Certificates of Correction Branch (CofC)**
**South Tower - 9A22**
**Palm Location 7580**

VIRGINIA TOLBERT
**Certificates of Correction Branch**
**703-308-9390 ext. 113**

**Thank You For Your Assistance**

**The request for issuing the above-identified correction(s) is hereby:**
Note your decision on the appropriate box.

- ☑ **Approved** — All changes apply.
- ☐ **Approved in Part** — Specify below which changes **do not** apply.
- ☐ **Denied** — State the reasons for denial below.

**Comments:** _____

PHILIP TUCKER
**SPE**

1791
**Art Unit**

UNITED STATES PATENT AND TRADEMARK OFFICE

Commissioner for Patents
United States Patent and Trademark Office
P.O. Box 1450
Alexandria, VA 22313-1450
www.uspto.gov

PAUL A. LEIPOLD
PATENT LEGAL STAFF
EASTMAN KODAK COMPANY
343 STATE STREET
ROCHESTER NY 14650-2201

**COPY MAILED**

MAR 06 2007

**OFFICE OF PETITIONS**

In re Application of
Thomas M. Laney et al.
Application No. 10/954,003
Filed: September 29, 2004
Attorney Docket No: 86349AAEK

ON PETITION

This is a decision on the petition filed January 17, 2007 under 37 CFR 1.182, for withdrawal of the terminal disclaimer filed September 18, 2006.

The petition is **GRANTED**.

The examiner responsible for the above-identified application has indicated that the terminal disclaimer filed September 18, 2006 does not apply to any of the claims as currently amended. Accordingly, on petition the terminal disclaimer is withdrawn and in view thereof, the double patenting rejection issues remain.

The petition fee in the amount of $400.00 has been charged to deposit account no. 05-0225 pursuant to the authorization contained in the petition.

This matter is being referred to Technology Center 1772 to correct the records related to the terminal disclaimer filed September 18, 2006 consistent with this decision.

Telephone inquiries concerning this matter may be directed to the undersigned Petitions Attorney at (571) 272-3212.

Patricia Faison-Ball

Patricia Faison-Ball
Senior Petitions Attorney
Office of Petitions

UNITED STATES PATENT AND TRADEMARK OFFICE

Commissioner for Patents
United States Patent and Trademark Office
P.O. Box 1450
Alexandria, VA 22313-1450
www.uspto.gov

**HAMRE, SCHUMANN, MUELLER & LARSON P.C.**
**P.O. BOX 2902-0902**
**MINNEAPOLIS MN 55402**

MAILED

SEP 15 2009

OFFICE OF PETITIONS

| | | |
|---|---|---|
| In re Application of | : | |
| Teppei Shinno et al | : | |
| Application No. 10/954,020 | : | DECISION GRANTING PETITION |
| Filed: September 28, 2004 | : | UNDER 37 CFR 1.313(c)(2) |
| Attorney Docket No. 10873.1559US01 | : | |

This is a decision on the petition under 37 CFR 1.313(c)(2), filed September 14, 2009, to withdraw the above-identified application from issue after payment of the issue fee.

The petition is **GRANTED**.

The above-identified application is withdrawn from issue for consideration of a submission under 37 CFR 1.114 (request for continued examination). *See* 37 CFR 1.313(c)(2).

***Petitioner is advised that the issue fee paid on August 19, 2009 cannot be refunded. If, however, this application is again allowed, petitioner may request that it be applied towards the issue fee required by the new Notice of Allowance.***[1]

Telephone inquiries should be directed to the undersigned at (571) 272-3208.

This application is being referred to Technology Center AU 1795 for processing of the request for continued examination under 37 CFR 1.114 and for consideration of the concurrently filed IDS.

/Karen Creasy/
Karen Creasy
Petitions Examiner
Office of Petitions

---

[1] *The request to apply the issue fee to the new Notice may be satisfied by completing and returning the new Part B – Fee(s) Transmittal Form (along with any balance due at the time of submission). Petitioner is advised that the Issue Fee Transmittal Form* ***must*** *be completed and timely submitted to avoid abandonment of the application.*

UNITED STATES PATENT AND TRADEMARK OFFICE

UNITED STATES DEPARTMENT OF COMMERCE
United States Patent and Trademark Office
Address: COMMISSIONER FOR PATENTS
P.O. Box 1450
Alexandria, Virginia 22313-1450
www.uspto.gov

| APPL NO. | FILING OR 371 (c) DATE | ART UNIT | FIL FEE REC'D | ATTY.DOCKET NO | DRAWINGS | TOT CLMS | IND CLMS |
|---|---|---|---|---|---|---|---|
| 10/954,032 | 09/29/2004 | 2631 | 806 | T0529.70030US00 | 7 | 22 | 3 |

**CONFIRMATION NO. 3328**

**CORRECTED FILING RECEIPT**

*OC000000014830373*

Edmund J. Walsh
Wolf, Greenfield & Sacks, P.C.
600 Atlantic Avenue
Boston, MA 02210-2206

Date Mailed: 12/27/2004

Receipt is acknowledged of this regular Patent Application. It will be considered in its order and you will be notified as to the results of the examination. Be sure to provide the U.S. APPLICATION NUMBER, FILING DATE, NAME OF APPLICANT, and TITLE OF INVENTION when inquiring about this application. Fees transmitted by check or draft are subject to collection. Please verify the accuracy of the data presented on this receipt. **If an error is noted on this Filing Receipt, please write to the Office of Initial Patent Examination's Filing Receipt Corrections, facsimile number 703-746-9195. Please provide a copy of this Filing Receipt with the changes noted thereon. If you received a "Notice to File Missing Parts" for this application, please submit any corrections to this Filing Receipt with your reply to the Notice. When the USPTO processes the reply to the Notice, the USPTO will generate another Filing Receipt incorporating the requested corrections (if appropriate).**

**Applicant(s)**

Mehmet Nejat Tek, Quincy, MA;
Chibing Liu, Northborough, MA;

**Assignment For Published Patent Application**

Teradyne, Inc., Boston, MA

**Power of Attorney:** The patent practitioners associated with Customer Number **23628**.

**Domestic Priority data as claimed by applicant**

**Foreign Applications**

**If Required, Foreign Filing License Granted:** 11/12/2004

**The country code and number of your priority application, to be used for filing abroad under the Paris Convention, is US10/954,032**

**Projected Publication Date:** 03/30/2006

**Non-Publication Request:** No

**Early Publication Request:** No

**Title**

Method and apparatus for measuring jitter

**Preliminary Class**

375

---

## LICENSE FOR FOREIGN FILING UNDER
## Title 35, United States Code, Section 184
## Title 37, Code of Federal Regulations, 5.11 & 5.15

**GRANTED**

The applicant has been granted a license under 35 U.S.C. 184, if the phrase "IF REQUIRED, FOREIGN FILING LICENSE GRANTED" followed by a date appears on this form. Such licenses are issued in all applications where the conditions for issuance of a license have been met, regardless of whether or not a license may be required as set forth in 37 CFR 5.15. The scope and limitations of this license are set forth in 37 CFR 5.15(a) unless an earlier license has been issued under 37 CFR 5.15(b). The license is subject to revocation upon written notification. The date indicated is the effective date of the license, unless an earlier license of similar scope has been granted under 37 CFR 5.13 or 5.14.

This license is to be retained by the licensee and may be used at any time on or after the effective date thereof unless it is revoked. This license is automatically transferred to any related applications(s) filed under 37 CFR 1.53(d). This license is not retroactive.

The grant of a license does not in any way lessen the responsibility of a licensee for the security of the subject matter as imposed by any Government contract or the provisions of existing laws relating to espionage and the national security or the export of technical data. Licensees should apprise themselves of current regulations especially with respect to certain countries, of other agencies, particularly the Office of Defense Trade Controls, Department of State (with respect to Arms, Munitions and Implements of War (22 CFR 121-128)); the Office of Export Administration, Department of Commerce (15 CFR 370.10 (j)); the Office of Foreign Assets Control, Department of Treasury (31 CFR Parts 500+) and the Department of Energy.

**NOT GRANTED**

No license under 35 U.S.C. 184 has been granted at this time, if the phrase "IF REQUIRED, FOREIGN FILING LICENSE GRANTED" DOES NOT appear on this form. Applicant may still petition for a license under 37 CFR 5.12, if a license is desired before the expiration of 6 months from the filing date of the application. If 6 months has lapsed from the filing date of this application and the licensee has not received any indication of a secrecy order under 35 U.S.C. 181, the licensee may foreign file the application pursuant to 37 CFR 5.15(b).

UNITED STATES PATENT AND TRADEMARK OFFICE

Commissioner for Patents
United States Patent and Trademark Office
P.O. Box 1450
Alexandria, VA 22313-1450
www.uspto.gov

KRISHNA SHENAI
2259 PALMER CIRCLE
NAPERVILLE, IL 60564

COPY MAILED

JUL 31 2006

OFFICE OF PETITIONS

| | | |
|---|---|---|
| In re Application of | : | |
| Krishna Shenai | : | |
| Application No. 10/954,053 | : | ON PETITION |
| Filed: September 30, 2004 | : | |
| Attorney Docket No. 8259-3 | : | |

This is a decision on the petition under 37 CFR 1.137(b), filed March 14, 2006, to revive the above-identified application.

The petition is **GRANTED**.

The above-identified application became abandoned for failure to reply in a timely manner to the non-final Office action mailed August 9, 2005, which set a shortened statutory period for reply of three (3) months. No extension of time under the provisions of 37 CFR 1.136(a) were obtained. Accordingly, the above-identified application became abandoned on November 10, 2005.

Telephone inquiries concerning this decision should be directed to Irvin Dingle at (571) 272-3210.

This matter is being referred to Technology Center AU 2826 for further processing.

Irvin Dingle
Petitions Examiner
Office of Petitions

UNITED STATES PATENT AND TRADEMARK OFFICE

Commissioner for Patents
United States Patent and Trademark Office
P.O. Box 1450
Alexandria, VA 22313-1450
www.uspto.gov

**CHRISTOPHER Q. REID**
**4016 PLEASANT VALLEY ROAD**
**VIRGINIA BEACH VA 23464**

MAILED

JUN 21 2010

OFFICE OF PETITIONS

| | | |
|---|---|---|
| In re Application of | : | |
| Christopher Q. REID | : | |
| Application No. 10/954,061 | : | DECISION ON PETITION |
| Filed: December 15, 2008 | : | |
| Attorney Docket No. 036606 | : | |

This is a decision on the petition, filed November 24, 2009, which is being treated as a petition under 37 CFR 1.8(b), requesting withdrawal of the holding of abandonment in the above-identified application.

The petition is **DISMISSED**.

The application became abandoned for failure to timely reply within the meaning of 37 CFR 1.113 to the final Office action, mailed April 06, 2009, which set a shortened statutory period for reply of three (3) months. No extensions of time under the provisions of 37 CFR 1.136(a) were obtained. Accordingly, the application became abandoned on July 07, 2009.

Petitioner states that a timely reply was filed on October 06, 2009. However, the final rejection mailed April 06, 2009 had a set shortened statutory period set to expire three (3) months for the date of mailing. Under 37 CFR 1.136(a) the shortened statutory period could only be extended for three (3) months. The application became abandoned on July 07, 2009 for failure to prosecute. On November 24, 2009 applicant paid a five (5) month extension of time which was after the maximum extendable time period.

An extension of time under 37 CFR 1.136 must be filed prior to the expiration of the maximum extendable period for reply. *See* In re Application of S., 8 USPQ2d 1630, 1631 (Comm'r Pats. 1988). Since the $1,175.00 extension of time fee submitted with the petition on November 24, 2009 was subsequent to the maximum extendable period for reply, this fee is unnecessary and will be credited to petitioner's deposit account.

If petitioner cannot supply the evidence necessary to withdraw the holding of abandonment, or simply does not wish to, petitioner should consider filing a petition under 37 CFR 1.137(b) stating that the delay was unintentional. Public Law 97-247, § 3, 96 Stat. 317 (1982), which revised patent and trademark fees, amended 35 U.S.C. § 41(a)(7) to provide for the revival of an "unintentionally" abandoned

application without a showing that the delay in prosecution or in late payment of the issue fee was "unavoidable." This amendment to 35 U.S.C. § 41(a)(7) has been implemented in 37 CFR 1.137(b). An "unintentional" petition under 37 CFR 1.137(b) must be accompanied by the $810.00 petition fee.

The filing of a petition under 37 CFR 1.137(b) cannot be intentionally delayed and therefore must be filed promptly. A person seeking revival due to unintentional delay cannot make a statement that the delay was unintentional unless the entire delay, including the date it was discovered that the application was abandoned until the filing of the petition to revive under 37 CFR 1.137(b), was unintentional. A statement that the delay was unintentional is not appropriate if petitioner intentionally delayed the filing of a petition for revival under 37 CFR 1.137(b).

Further correspondence with respect to this matter should be addressed as follows:

By Mail: Mail Stop PETITION
Commissioner for Patents
P. O. Box 1450
Alexandria, VA 22313-1450

By hand: U. S. Patent and Trademark Office
Customer Service Window, Mail Stop Petitions
Randolph Building
401 Dulany Street
Alexandria, VA 22314

By facsimile: **(571) 273-8300**
Attn: Office of Petitions

Telephone inquiries concerning this decision should be directed to Michelle R. Eason at (571) 272-4231.

Thurman K. Page
Petitions Examiner
Office of Petitions

UNITED STATES PATENT AND TRADEMARK OFFICE

Commissioner for Patents
United States Patent and Trademark Office
P.O. Box 1450
Alexandria, VA 22313-1450
www.uspto.gov

DORSEY & WHITNEY LLP
INTELLECTUAL PROPERTY DEPARTMENT
250 PARK AVENUE
NEW YORK NY 10177

MAIL

SEP 09 2009

DIRECTOR'S OFFICE
TECHNOLOGY CENTER 2600

In re Application of:
HEYMANN, MATTHIAS
Application Serial No.: 10/954,063
Filed: September 29, 2004
For: **AUDIO AND VISUAL SYSTEM AND METHOD FOR PROVIDING AUDIO AND VISUAL INFORMATION USING SUCH SYSTEM**

DECISION
ON PETITION

This is a decision on the petition, filed May 5, 2009, treated as a petition pursuant to 37 CFR § 1.181, requesting the amendment after final action filed concurrently on May 05, 2009 (duplicate of amendment filed March 30, 2009) be entered.

Petitioner asserts that no new issues have been raised by the amendments to the claims as the examiner asserted in the advisory action mailed March 30, 2009.

A review of the file record shows the examiner withdrew the finality of the last office action of December 12, 2008 and entered the amendment to the claims submitted May 05, 2009 in a non-final office action mailed July 10, 2009.

For the reasons set forth above, the petition to enter the amendment after final filed March 20, 2009 and again filed concurrently with this petition is **DISMISSED AS MOOT**.

The application is currently awaiting response from the applicant to the non-final office action mailed July 10, 2009.

Michael Horabik
Quality Assurance Specialist
Technology Center 2600
Communications

UNITED STATES PATENT AND TRADEMARK OFFICE

UNITED STATES DEPARTMENT OF COMMERCE
United States Patent and Trademark Office
Address: COMMISSIONER FOR PATENTS
P.O. Box 1450
Alexandria, Virginia 22313-1450
www.uspto.gov

| APPL NO. | FILING OR 371 (c) DATE | ART UNIT | FIL FEE REC'D | ATTY.DOCKET NO | DRAWINGS | TOT CLMS | IND CLMS |
|---|---|---|---|---|---|---|---|
| 10/954,069 | 09/28/2004 | 2622 | 2288 | 015358-009800US | 21 | 90 | 6 |

**CONFIRMATION NO. 2265**

**CORRECTED FILING RECEIPT**

*OC000000015024972*

20350
TOWNSEND AND TOWNSEND AND CREW, LLP
TWO EMBARCADERO CENTER
EIGHTH FLOOR
SAN FRANCISCO, CA 94111-3834

Date Mailed: 01/26/2005

Receipt is acknowledged of this regular Patent Application. It will be considered in its order and you will be notified as to the results of the examination. Be sure to provide the U.S. APPLICATION NUMBER, FILING DATE, NAME OF APPLICANT, and TITLE OF INVENTION when inquiring about this application. Fees transmitted by check or draft are subject to collection. Please verify the accuracy of the data presented on this receipt. **If an error is noted on this Filing Receipt, please write to the Office of Initial Patent Examination's Filing Receipt Corrections, facsimile number 703-746-9195. Please provide a copy of this Filing Receipt with the changes noted thereon. If you received a "Notice to File Missing Parts" for this application, please submit any corrections to this Filing Receipt with your reply to the Notice. When the USPTO processes the reply to the Notice, the USPTO will generate another Filing Receipt incorporating the requested corrections (if appropriate).**

**Applicant(s)**

Berna Erol, Cupertino, CA;
Jonathan J. Hull, San Carlos, CA;
Jamey Graham, San Jose, CA;
Dar-Shyang Lee, Union City, CA;
Peter E. Hart, Menlo Park, CA;

**Assignment For Published Patent Application**

Ricoh Company, Ltd., Tokyo, JAPAN

**Power of Attorney:** None

**Domestic Priority data as claimed by applicant**

**Foreign Applications**

**If Required, Foreign Filing License Granted:** 11/12/2004

**The country code and number of your priority application, to be used for filing abroad under the Paris Convention, is US10/954,069**

**Projected Publication Date:** Request for Non-Publication Acknowledged

**Non-Publication Request:** Yes

**Early Publication Request:** No

**Title**

Techniques for encoding media objects to a static visual representation

**Preliminary Class**

358

---

## LICENSE FOR FOREIGN FILING UNDER
## Title 35, United States Code, Section 184
## Title 37, Code of Federal Regulations, 5.11 & 5.15

**GRANTED**

The applicant has been granted a license under 35 U.S.C. 184, if the phrase "IF REQUIRED, FOREIGN FILING LICENSE GRANTED" followed by a date appears on this form. Such licenses are issued in all applications where the conditions for issuance of a license have been met, regardless of whether or not a license may be required as set forth in 37 CFR 5.15. The scope and limitations of this license are set forth in 37 CFR 5.15(a) unless an earlier license has been issued under 37 CFR 5.15(b). The license is subject to revocation upon written notification. The date indicated is the effective date of the license, unless an earlier license of similar scope has been granted under 37 CFR 5.13 or 5.14.

This license is to be retained by the licensee and may be used at any time on or after the effective date thereof unless it is revoked. This license is automatically transferred to any related applications(s) filed under 37 CFR 1.53(d). This license is not retroactive.

The grant of a license does not in any way lessen the responsibility of a licensee for the security of the subject matter as imposed by any Government contract or the provisions of existing laws relating to espionage and the national security or the export of technical data. Licensees should apprise themselves of current regulations especially with respect to certain countries, of other agencies, particularly the Office of Defense Trade Controls, Department of State (with respect to Arms, Munitions and Implements of War (22 CFR 121-128)); the Office of Export Administration, Department of Commerce (15 CFR 370.10 (j)); the Office of Foreign Assets Control, Department of Treasury (31 CFR Parts 500+) and the Department of Energy.

**NOT GRANTED**

No license under 35 U.S.C. 184 has been granted at this time, if the phrase "IF REQUIRED, FOREIGN FILING LICENSE GRANTED" DOES NOT appear on this form. Applicant may still petition for a license under 37 CFR 5.12, if a license is desired before the expiration of 6 months from the filing date of the application. If 6 months has lapsed from the filing date of this application and the licensee has not received any indication of a secrecy order under 35 U.S.C. 181, the licensee may foreign file the application pursuant to 37 CFR 5.15(b).

UNITED STATES PATENT AND TRADEMARK OFFICE

COMMISSIONER FOR PATENTS
UNITED STATES PATENT AND TRADEMARK OFFICE
P.O. BOX 1450
ALEXANDRIA, VA 22313-1450
www.uspto.gov

MAILED

JAN 25 2006

TECHNOLOGY CENTER 2100

ANTONELLI, TERRY, STOUT & KRAUS, LLP
1300 NORTH SEVENTEENTH STREET
SUITE 1800
ARLINGTON VA 22209-3873

In re Application of: ISHII et al.
Application No. 10/954,075
Filed: September 30, 2004
For: COMPUTER STORAGE SYSTEM, FILE MANAGEMENT METHOD DONE BY THE COMPUTER, AND PROGRAM

DECISION ON PETITION
TO MAKE SPECIAL
(ACCELERATED EXAMINATION)
UNDER M.P.E.P. §708.02 (VIII)

This is a response to the petition filed 23 December 2005 under 37 C.F.R. §1.102(d) and M.P.E.P. §708.02 (VIII): Accelerated Examination, to make the above-identified application special.

The Petition is **GRANTED**.

M.P.E.P. §708.02, Section VIII which sets out the prerequisites for a grantable petition for Accelerated Examination under 37 C.F.R. §1.102(d) states in relevant part:

A new application (one which has not received any examination by the examiner) may be granted special status provided that applicant (and this term includes applicant's attorney or agent) complies with each of the following items:

(a) Submits a petition to make special accompanied by the fee set forth in **37 CFR 1.17(h)**;

(b) Presents all claims directed to a single invention, or if the Office determines that all the claims presented are not obviously directed to a single invention, will make an election without traverse as a prerequisite to the grant of special status;

(c) Submits a statement(s) that a pre-examination search was made, listing the field of search by class and subclass, publication, Chemical Abstracts, foreign patents, etc. The pre-examination search must be directed to the invention as claimed in the application for which special status is requested. A search made by a foreign patent office satisfies this requirement;

(d) Submits one copy each of the references deemed most closely related to the subject matter encompassed by the claims if said references are not already of record; and

(e) Submits a detailed discussion of the references, which discussion points out, with the particularity required by 37 CFR 1.111 (b) and (c), how the claimed subject matter is patentable over the references.

Applicant's submission meets all the criteria set out above. Accordingly, the petition is **GRANTED**.

The application file is being forwarded to the Examiner of Record for accelerated examination according to the procedures set forth in MPEP § 708.02, Section VIII.

Pinchus M. Laufer
Special Program Examiner
Technology Center 2100
Computer Architecture, Software and Information Security
571-272-3599

ds

UNITED STATES PATENT AND TRADEMARK OFFICE

Commissioner for Patents
United States Patent and Trademark Office
P.O. Box 1450
Alexandria, VA 22313-1450
www.uspto.gov

ATTN: TRAVIS DODD
LAW OFFICES OF TRAVIS L. DODD, PC
2490 HEYNEMAN HOLLOW
FALLBROOK, CA 92028

COPY MAILED

JUL 27 2009

OFFICE OF PETITIONS

| | | |
|---|---|---|
| In re Application of | : | |
| Jen-Jr. Gau | : | |
| Application No. 10/954,078 | : | DECISION ON PETITION |
| Filed: September 28, 2004 | : | |
| Attorney Docket No. GF17601 | : | |

This is a decision on the petition, filed May 22, 2009, which is being treated as a petition under 37 CFR 1.8(b), requesting withdrawal of the holding of abandonment in the above-identified application.

The petition is **GRANTED**.

This application was held abandoned for failure to timely respond to the Office action of September 22, 2008, which set a three (3) month shortened statutory period for reply. Accordingly, a reply was due on or before December 22, 2009.

Petitioner states that a timely reply was mailed via certificate of mailing on March 24, 2009, which included the following papers: amendment, a three-month extension of time and drawings. Petitioner has submitted a copy of the previously mailed correspondence, which bears a certificate of mailing dated March 20, 2009, which would have rendered the reply timely if received.

Failure to receive correspondence which includes a certificate of mailing or certificate of facsimile transmission is addressed in 37 CFR 1.8(b), reproduced below:

> In the event that correspondence is considered timely filed by being mailed or transmitted in accordance with paragraph (a) of this section, but not received in the U.S. Patent and Trademark Office after a reasonable amount of time has elapsed from the time of mailing or transmitting of the correspondence, or after the application is held to be abandoned, or after the proceeding is dismissed, terminated, or decided with prejudice, the correspondence will be considered timely if the party who forwarded such correspondence:

(1) Informs the Office of the previous mailing or transmission of the correspondence promptly after becoming aware that the Office has no evidence of receipt of the correspondence;

(2) Supplies an additional copy of the previously mailed or transmitted correspondence and certificate; and

(3) Includes a statement which attests on a personal knowledge basis or to the satisfaction of the Director to the previous timely mailing or transmission. If the correspondence was sent by facsimile transmission, a copy of the sending unit's report confirming transmission may be used to support this statement.

The petition satisfies the above requirements of 37 CFR 1.8(b). Accordingly, the holding of abandonment for failure to timely file a reply to the Office action of September 22, 2008 is hereby withdrawn and the application restored to pending status.

The copy of the reply received with the petition will be accepted in place of the reply shown to have been mailed (or transmitted by facsimile) on May 22, 2009.

Telephone inquiries concerning this decision should be directed to April M. Wise at 571-272-1642. All other inquiries concerning the examination or status of this application should be directed to the Technology Center.

This application is being referred to Technology Center AU 1795 for appropriate action in the normal course of business on the reply received with petition.

/dab/
David Bucci
Petitions Examiner
Office of Petitions

OIPE JC88
JUL 22 2005
PATENT & TRADEMARK OFFICE

IN THE UNITED STATES PATENT AND TRADEMARK OFFICE

APPLICANT: VICKERS, SR. DOCKET NO: 6000P2654div1

FILED: 10/954,115 FILED: 09-29-2004F

TITLE: AN IMPROVED AGE EXPEDITED ALCOHOLIC BEVERAGE

RECEIVED
JUL 25 2005
OFFICE OF PETITIONS

---

Commissioner for Patents
P.O. Box 1450
Alexandria, VA 22231-1450

Weiss, Moy & Harris, P.C.
4204 North Brown Avenue
Scottsdale, AZ 85251-3989

July 20, 2005

**PETITION TO MAKE SPECIAL**
**UNDER 37 CFR 1.102 AND M.P.E.P. 708.02**

Dear Sir:

Applicant petitions that his above-identified patent application be made special because he is over 65 years of age. Enclosed herewith is a copy of Applicant's Driver's License which is offered as a showing of his age.

If there are any fees incurred with this processing of this Petition to Make Special, please charge them to our Deposit Account No. 23-0830.

Respectfully submitted,

Craig Weiss
Reg. No. 48,274
(480) 994-8888

**PETITION GRANTED**

**William Krynski**
**Special Program Examiner**
**Technology Center 1700**
MAR 14 2006

UNITED STATES PATENT AND TRADEMARK OFFICE

Commissioner for Patents
United States Patent and Trademark Office
P.O. Box 1450
Alexandria, VA 22313-1450
www.uspto.gov

**BELL, BOYD & LLOYD LLC**
**P.O. BOX 1135**
**CHICAGO, IL 60690-1135**

COPY MAILED

AUG 29 2005

OFFICE OF PETITIONS

| | | |
|---|---|---|
| In re Application of | : | |
| Maya, Darren | : | |
| Application No. 10/954,133 | : | ON PETITION |
| Filed: September 28, 2004 | : | |
| Attorney Docket No. 112300-1866 | : | |

This is a decision on the petition filed May 25, 2005, requesting that the above-identified application be accorded a filing date of September 28, 2004, rather than the presently accorded date of September 26, 2004. The petition is properly treated as a petition under 37 CFR 1.10(d).

Applicant requests the earlier filing date on the basis that the application was purportedly deposited with the U.S. Postal Service (USPS) as Express Mail on September 28, 2004 pursuant to 37 CFR 1.10. In support, applicant has submitted a copy of Express Mail label No. EV 511587387 US showing an incorrect handwritten "date-in" of "September 26, 2004." The same Express Mail receipt number appears on the original "Utility Patent Application Transmittal." The Express Mail label number appears on the Certificate of Mailing by "Express Mail" and includes a statement of express mailing dated September 28, 2004 on the cover page for the application papers.

To further substantiate applicant's allegation that the application papers for this file were deposited on the requested filing date, an independent search was made of the USPS Express Mail Track and Confirm records which resulted in a finding that the package in question was in fact accepted on September 28, 2004 at 7:32 p.m. at the Chicago, IL USPS.

Therefore, in view of all the evidence, it is concluded that the application was deposited in Express Mail service on September 28, 2004. Accordingly, the instant application is entitled to a filing date of September 28, 2004 and has been so accorded.

The petition is **GRANTED**.

A petition under 37 CFR 1.10(d) does not require a petition fee and none has been charged.

This matter is being referred to the Office of Initial Patent Examination Division for further **processing with a filing date of** September 28, 2004, **along with a corrected filing receipt.** Thereafter, the matter will be referred to Technology Center 3700 for examination in due course.

Telephone inquiries concerning this matter may be directed Paralegal Liana Chase at (571) 272-3206.

Frances Hicks
Petitions Examiner
Office of Petitions
Office of the Deputy Commissioner
For Patent Examination Policy

UNITED STATES PATENT AND TRADEMARK OFFICE

Commissioner for Patents
United States Patent and Trademark Office
P.O. Box 1450
Alexandria, VA 22313-1450
www.uspto.gov

GOOGLE / FENWICK
SILICON VALLEY CENTER
801 CALIFORNIA ST.
MOUNTAIN VIEW CA 94041

COPY MAILED

SEP 28 2009

OFFICE OF PETITIONS

| | | |
|---|---|---|
| In re Application of | : | |
| Duane Scott Hess | : | |
| Application No. 10/954146 | : | ON REQUEST FOR |
| Filing or 371(c) Date: 09/30/2004 | : | RECONSIDERATION OF |
| Attorney Docket Number: 24207-10126 | : | PATENT TERM ADJUSTMENT |

This is in response to the REQUEST FOR RECONSIDERATION OF PATENT TERM ADJUSTMENT UNDER 37 C.F.R. §1.705(b), filed May 27, 2009. Applicant submits that the correct patent term adjustment to be indicated on the patent is 918 days, not 653 days as calculated by the Office as of the mailing of the initial determination of patent term adjustment. Applicant requests this correction solely on the basis that the Office will take in excess of three years to issue this patent.

As the instant application for patent term adjustment requests reconsideration of the patent term adjustment as it relates to the Office's failure to issue the patent within 3 years of the filing date, the application for patent term adjustment under 37 CFR 1.705(b) is **DISMISSED as PREMATURE**.

Knowledge of the actual date the patent issues is required to calculate the amount, if any, of additional patent term patentee is entitled to for Office failure to issue the patent within 3 years. See § 1.702(b). (This is true even where a request for continued examination (RCE) was filed). The computer will not undertake the § 1.702(b) calculation until the actual date of issuance of the patent has been determined. Likewise, the computer will not calculate any further Office delay under § 1.702(a)(4) or applicant delay under § 1.704(c)(10) until the actual date of issuance of the patent has been determined. As such, the Office can not make a determination on the correctness of the patent term adjustment until the patent has issued.

Requesting reconsideration of the patent term adjustment to be indicated on the patent under 37 CFR 1.705(b) based on the initial determination of patent term adjustment and a projected issuance date of the patent (or even the filing date of the request for continued examination) is premature. Accordingly, it is appropriate to dismiss as premature such a request.

Rather than file a request for reconsideration of patent term adjustment under 37 CFR 1.705(b) contesting the 37 CFR 1.702(b) calculation at the time of the mailing of the notice of allowance, applicant is advised that they may wait until the time of the issuance of the patent and file a request for reconsideration of the patent term adjustment pursuant to 37 CFR 1.705(d). As the USPTO does not calculate the amount of time earned pursuant to 37 CFR 1.702(b) until the time of the issuance of the patent, the Office will consider any request for reconsideration of the patent term adjustment due to an error in the calculation of 37 CFR 1.702(b) to be timely if the request for reconsideration is filed within two months of the issuance of the patent. However, as to all other bases for contesting the initial determination of patent term adjustment received with the notice of allowance, applicant must timely file an application for patent term adjustment prior to the payment of the issue fee[1].

The Office acknowledges submission of the $200.00 fee set forth in 37 CFR 1.18(e) for consideration of the application for patent term adjustment under 37 CFR 1.705(b).

Any request for reconsideration of the patent term adjustment indicated on the patent must be timely filed within 2 months after issuance pursuant to 37 CFR 1.705(d) and must include payment of the required fee under 37 CFR 1.18(e).

The Office of Data Management has been advised of this decision. This application is being referred to the Office of Data Management for issuance of the patent.

Telephone inquiries specific to this decision should be directed to Attorney Derek Woods at (571) 272-3232.

Alesia Brown
Senior Petitions Attorney
Office of Petitions
Office of the Deputy Commissioner
for Patent Examination Policy

---

[1] For example, if applicant disputes both the calculation of patent term adjustment under 37 CFR 1.702(a)(1) for Office failure to mail a first Office action or notice of allowance not later than fourteen months after the date on which the application was filed and under 37 CFR 1.702(b) for Office failure to issue a patent within three years of the actual filing date of the application, then applicant must still timely file an application for patent term adjustment prior to the payment of the issue fee to contest the calculation of Office delay in issuing a first Office action or notice of allowance. See 37 CFR 1.705(b) and 35 U.S.C. 154(b)(3)(B). A dispute as to the calculation of the §1.702(a)(1) period raised on request for reconsideration of patent term adjustment under 37 CFR 1.705(d) will be dismissed as untimely filed.

UNITED STATES PATENT AND TRADEMARK OFFICE

UNITED STATES DEPARTMENT OF COMMERCE
United States Patent and Trademark Office
Address: COMMISSIONER FOR PATENTS
P.O. Box 1450
Alexandria, Virginia 22313-1450
www.uspto.gov

GOOGLE / FENWICK
SILICON VALLEY CENTER
801 CALIFORNIA ST.
MOUNTAIN VIEW, CA 94041

Mail Date: 04/21/2010

| | | |
|---|---|---|
| **Applicant** | : Duane Scott Hess | : DECISION ON REQUEST FOR |
| **Patent Number** | : 7613769 | : RECALCULATION of PATENT |
| **Issue Date** | : 11/03/2009 | : TERM ADJUSTMENT IN VIEW |
| **Appliction No** | : 10/954,146 | : OF WYETH AND NOTICE OF INTENT TO |
| **Filed** | : 09/30/2004 | : ISSUE CERTIFICATE OF CORRECTION |
| | | : |

The Request for Recalculation is **GRANTED** to the extent indicated.

The patent term adjustment has been determined to be **950** days. The USPTO will *sua sponte* issue a certificate of correction reflecting the amount of PTA days determined by the recalculation.

Prior to the issuance of the certificate of correction, the USPTO will afford patentee an opportunity to be heard and request reconsideration. Accordingly, patentee has **one month or thirty (30) days**, whichever is longer, to file a request for reconsideration of this patent term adjustment calculation. See 35 U.S.C. 154(b)(3)(B)(ii) and 37 CFR 1.322(a)(4). No extensions of time will be granted under 37 CFR 1.136.

Patentee should use document code PET.OP if electronically filing a request for reconsideration of this patent term adjustment calculation. The patentee must also include the information required by 37 CFR 1.705(b)(2) and the fee required by 37 CFR 1.18(e). If patentee does not file a timely request for reconsideration of this patent term adjustment calculation including the information required by 37 CFR 1.705(b)(2) and the fee required by 37 CFR 1.18(e), the USPTO will issue a certificate of correction reflecting the PTA determination noted above.

Patentee should be aware that in order to preserve the right to review in the United States District Court for the District of Columbia of the USPTO patent term adjustment determination, patentee must ensure that he or she also take the steps required under 35 U.S.C. 154(b)(4)(A) in a timely manner. Nothing in the request for recalculation should be construed as providing an alternative time frame for commencing a civil action under 35 U.S.C. 154(b)(4)(A).

Any questions concerning this decision should be directed to the Office of Patent Legal Administration at 571-272-7702.

UNITED STATES PATENT AND TRADEMARK OFFICE

Commissioner for Patents
United States Patent and Trademark Office
P.O. Box 1450
Alexandria, VA 22313-1450
www.uspto.gov

**ADE & COMPANY INC.**
**2157 Henderson Highway**
**WINNIPEG MB R2G1P-9 CA CANADA**

COPY MAILED

AUG 08 2007

OFFICE OF PETITIONS

| | | |
|---|---|---|
| In re Application of | : | |
| Darren H. Freed et al | : | |
| Application No. 10/954,159 | : | DECISION ON PETITION |
| Filed: September 30, 2004 | : | |
| Attorney Docket No. 81190-2802 | : | |

This is a decision on the petition under 37 CFR 1.137(b), filed November 22, 2006, to revive the above-identified application.

The petition is **GRANTED.**

The application became abandoned for failure to reply in a timely manner to the non-final Office action mailed, December 20, 2005, which set a shortened statutory period for reply of three (3) months. No extensions of time were obtained under the provisions of 37 CFR 1.136(a). Accordingly, the application became abandoned on March 21, 2006. A Notice of Abandonment was mailed on August 29, 2006.

The petition satisfies the requirements of 37 CFR 1.137(b) in that petitioner has supplied (1) a reply, (2) the petition fee of $750, and (3) a proper statement of unintentional delay. Accordingly, the failure to timely reply to the non-final Office action of December 20, 2005 is accepted as being unintentionally delayed.

This application is being referred to Technology Center AU 1644 for appropriate action in the normal course of business on the reply received November 22, 2006.

Telephone inquiries concerning this decision should be directed to the undersigned at (571) 272-3218.

Frances Hicks

Frances Hicks
Petitions Examiner
Office of Petitions

## SPE RESPONSE FOR CERTIFICATE OF CORRECTION

**Paper No**.:20081113

**DATE** : November 13, 2008

**TO SPE OF** : ART UNIT 3657

**SUBJECT** : Request for Certificate of Correction on Patent No.: 7316301

A response is requested with respect to the accompanying request for a certificate of correction.

Please complete this form and return with file, within **7** days to:
**Certificates of Correction Branch - ST (South Tower) 9A22**
Palm location **7590** - Tel. No. (703) 305-8309

With respect to the change(s) requested, correcting Office and/or Applicant's errors, should the patent read as shown in the certificate of correction? No new matter should be introduced, nor should the scope or meaning of the claims be changed.

**Thank You For Your Assistance** **Certificates of Correction Branch**

**The request for issuing the above-identified correction(s) is hereby:**

Note your decision on the appropriated box.

☒ **Approved** All changes apply.

☐ **Approved in Part** Specify below which changes **do not** apply.

☐ **Denied** State the reasons for denial below.

**Comments:**

Figures 13 and 14 were amended to show the reference numbers for the bracket 296 and the hole 297.

/Robert A. Siconolfi/
Supervisory Patent Examiner, Art Unit 3657

UNITED STATES PATENT AND TRADEMARK OFFICE

Commissioner for Patents
United States Patent and Trademark Office
P.O. Box 1450
Alexandria, VA 22313-1450
www.uspto.gov

**GREGORY J. GORE**
**70 WEST OAKLAND AVENUE, SUITE 316**
**DOYLESTOWN PA 18901**

**COPY MAILED**

APR 3 0 2008

**OFFICE OF PETITIONS**

| | | |
|---|---|---|
| In re Application of | : | |
| Robert R. MARINO, Jr. | : | |
| Application No. 10/954,169 | : | DECISION ON PETITION |
| Filed: October 01, 2004 | : | |
| Attorney Docket No. | : | |

This is a decision on the petition under the unintentional provisions of 37 CFR 1.137(b), filed February 29, 2008, to revive the above-identified application.

The petition is **DISMISSED**.

Any request for reconsideration of this decision must be submitted within TWO (2) MONTHS from the mail date of this decision. Extensions of time under 37 CFR 1.136(a) are permitted. The reconsideration request should include a cover letter entitled "Renewed Petition under 37 CFR 1.137(b)." This is **not** a final agency action within the meaning of 5 U.S.C. § 704.

The application became abandoned for failure s to timely pay the issue and publication fees on or before November 08, 2007, as required by the Notice of Allowance and Fee(s) Due, mailed August 08, 2007, which set a statutory period for reply of three (3) months. Accordingly, the application became abandoned on November 09, 2007.

A grantable petition under 37 CFR 1.137(b) must be accompanied by: (1) the required reply, unless previously filed; (2) the petition fee as set forth in 37 CFR 1.17(m); (3) a statement that the entire delay in filing the required reply from the due date for the reply until the filing of a grantable petition pursuant to 37 CFR 1.137(b) was unintentional; and (4) any terminal disclaimer (and fee as set forth in 37 CFR 1.20(d)) required by 37 CFR 1.137(d). Where there is a question as to whether either the abandonment or the delay in filing a petition under 37 CFR 1.137 was unintentional, the Director may require additional information. See MPEP 711.03(c)(II)(C) and (D). The instant petition lacks item(s) (1).

The following fees were paid on February 29, 2008, the petition fee and the publication fees. The issue fee payment was not received. The issue fee due is now $720 as set forth in the revised

fee schedule published in the Official Gazette of the United States Patent and Trademark Office on August 28, 2007.

Further correspondence with respect to this matter should be addressed as follows:

By Mail: Mail Stop PETITION
Commissioner for Patents
P. O. Box 1450
Alexandria, VA 22313-1450

By hand: U. S. Patent and Trademark Office
Customer Service Window, Mail Stop Petitions
Randolph Building
401 Dulany Street
Alexandria, VA 22314

The centralized facsimile number is **(571) 273-8300.**

Telephone inquiries concerning this decision should be directed to the undersigned at (571) 272-2783.

David Bucci
Petitions Examiner
Office of Petitions

UNITED STATES PATENT AND TRADEMARK OFFICE

Commissioner for Patents
United States Patent and Trademark Office
P.O. Box 1450
Alexandria, VA 22313-1450
www.uspto.gov

**Gregory J. Gore**
**70 West Oakland Avenue, Suite 316**
**Doylestown, PA 18901**

**COPY MAILED**

OCT 16 2008

**OFFICE OF PETITIONS**

| | | |
|---|---|---|
| In re Application of | : | |
| Robert R. Marino | : | |
| Application No. 10/954,169 | : | DECISION ON PETITION |
| Filed: October 01, 2004 | : | |
| Attorney Docket No. | : | |

This is a decision on the renewed petition under the unintentional provisions of 37 CFR 1.137(b), filed September 30, 2008, to revive the above-identified application.

The petition is **GRANTED**.

This application became abandoned for failure to timely pay the issue and publication fees on or before November 08, 2007, as required by the Notice of Allowance and Fee(s) Due, mailed August 08, 2007. Accordingly, the date of abandonment of this application is November 09, 2007.

The petition satisfies the requirements of 37 CFR 1.137(b) in that petitioner has supplied (1) the reply in the form of payment of the issue fee of $720 and the publication fee of $300, (2) the petition fee of $770; and (3) a proper statement of unintentional delay.

Telephone inquiries concerning this decision should be directed to Shelley Clement at (571) 272-6052 or in her absence to the undersigned at (571)272-7099.

This application is being referred to Publishing Division for processing into a patent.

Christopher Bottoff

for David Bucci
Petitions Examiner
Office of Petitions

UNITED STATES PATENT AND TRADEMARK OFFICE

Commissioner for Patents
United States Patent and Trademark Office
P.O. Box 1450
Alexandria, VA 22313-1450
www.uspto.gov

MAIL

FEB 08 2006

DIRECTOR OFFICE
TECHNOLOGY CENTER 2600

CHRISTIAN D. ABEL
ONSAGERS AS
POSTBOKS 6963 ST. OLAVS PLASS
NORWAY N-013-0 NO NORWAY

In re Application of
Gisle Bjontegard
Application No. 10/954,195
Filed: October 1, 2004
For: **CALCULATION OF INTERPOLATED PIXEL VALUES**

DECISION ON PETITION
TO MAKE SPECIAL

This is a decision on the petition filed December 27, 2005, under Manual of Patent Examination Procedure §708.02, VIII requesting accelerated examination.

The petition under Manual of Patent Examination Procedure §708.02, VIII, must:

(1) be filed prior to receiving any examination by the examiner,
(2) be accompanied by the required fee- $130,
(3) the claims should be directed to a single invention (if it is determined that the claims pertain to more than one invention, then applicant will have to make an election without traverse or forfeit accelerated examination status),
(4) state that a pre-examination search was made, and fully discuss the search method employed, such as classes and subclasses searched, publications, Chemical abstracts, patents, etc. A search made by a foreign patent office satisfies this requirement,
(5) be accompanied by a copy of each of the references most closely related to the subject matter encompassed by the claims if said references are not already of record,
(6) fully discuss the references, pointing out with the particularity required by 37 C.F.R. §1.111 (b) and (c), how the claimed subject matter is patentable over the references.

Applicant's submission is deficient in that it does not comply with item (6) above. Applicant is required to fully discuss each of the references considered most relevant and point out with the particularity of 37 C.F.R. §1.111(b) how the claims distinguish from the relevant art and also must clearly point out the patentable novelty which he or she thinks the claims present in view of the state of the art disclosed by the references cited, in accordance with 37 C.F.R. §1.111(c).

Accordingly, the petition is **DENIED**.

Should applicant desire reconsideration, he/she should supplement this petition by supplying the information as outlined above. No further petition fee is required.

Any request for reconsideration must be filed within **TWO MONTHS** of the date of this decision.

Dwayne Bost
Special Program Examiner
Technology Center 2600
Communications

UNITED STATES PATENT AND TRADEMARK OFFICE

COMMISSIONER FOR PATENTS
UNITED STATES PATENT AND TRADEMARK OFFICE
P.O. BOX 1450
ALEXANDRIA, VA 22313-1450
www.uspto.gov

MAIL

JUN 0 2 2006

DIRECTOR OFFICE
TECHNOLOGY CENTER 2600

CHRISTIAN D. ABEL
ONSAGERS AS
POSTBOKS 6963 ST. OLAVS PLASS
NORWAY N-013-0 NO NORWAY

In re Application of :
Gisle Bjontegaard :
Application No. 10/954,195 : DECISION ON PETITION
Filed: October 1, 2004 : TO MAKE SPECIAL
For: **CALCULATION OF INTERPOLATED PIXEL VALUES** :

This is a decision on the renewed petition filed March 24, 2006 under Manual of Patent Examination Procedure §708.02, VIII requesting accelerated examination.

The petition under Manual of Patent Examination Procedure §708.02, VIII, must:
(1) be filed prior to receiving any examination by the examiner,
(2) be accompanied by the required fee- $130,
(3) the claims should be directed to a single invention (if it is determined that the claims pertain to more than one invention, then applicant will have to make an election without traverse or forfeit accelerated examination status),
(4) state that a pre-examination search was made, and fully discuss the search method employed, such as classes and subclasses searched, publications, Chemical abstracts, patents, etc. A search made by a foreign patent office satisfies this requirement,
(5) be accompanied by a copy of each of the references most closely related to the subject matter encompassed by the claims if said references are not already of record,
(6) fully discuss the references, pointing out with the particularity required by 37 C.F.R. §1.111 (b) and (c), how the claimed subject matter is patentable over the references.

The supplemental detailed discussion filed March 24, 2006 taken together with the December 25, 2005 petition now meets all the above-listed requirements. Accordingly, the petition is **GRANTED**.

The application will retain its special status throughout its entire prosecution, including any appeal to the Board of Patent Appeals and Interferences, subject only to diligent prosecution by the applicant. The application file is being forwarded to the examiner for appropriate action in due course.

Krista Zele
Special Program Examiner
Technology Center 2600
Communications

UNITED STATES PATENT AND TRADEMARK OFFICE

Commissioner for Patents
United States Patent and Trademark Office
P.O. Box 1450
Alexandria, VA 22313-1450
www.uspto.gov

Paper No. 031505

DICKSTEIN SHAPIRO MORIN &
OSHINSKY LLP
2101 L STREET NW
WASHINGTON, DC 20037-1526

AUG 24 2005

| | | |
|---|---|---|
| In re Application of: | : | |
| JANNING | : | DECISION ON PETITION |
| Serial No.: 10/954,224 | : | TO MAKE SPECIAL |
| Filed: October 01, 2004 | : | |
| Attorney Docket No.: **J5460.0022/P022** | : | |

This is a decision on the petition under 37 C.F.R. § 1.102(c), filed March 08, 2005, to make the above-identified application special.

Petitioner requests that the above-identified application be made special under the accelerated examination procedure set forth in the Manual of Patent Examining Procedure (M.P.E.P.) § 708.02, Section IV: Applicant's Age.

A grantable petition to make special under 37 C.F.R. § 1.102, and in accordance with M.P.E.P. § 708.02, Section IV, must include evidence showing that the applicant is sixty five (65) years of age or more. No fee is required for this petition.

The petition includes a statement from the attorney stating that the John L. Janning is sixty-five (65) years of age or more. In addition, a copy of the birth certificate for John L. Janning is included as evidence.

Accordingly, the petition is GRANTED.

After allowance, this application will be given priority for printing. See M.P.E.P. § 1309.

If the examiner can make this application special without prejudice to any possible interfering applications, and s/he should make a rigid search for such, s/he is authorized to do so for the next action. Should the application be rejected, the application will not be considered special for the subsequent action unless the applicant promptly makes a bona fide effort to place the application in condition for allowance, even if it is necessary to have an interview with the examiner to accomplish this purpose.

If the examiner finds any interfering application for the same subject matter, s/he should consider such application simultaneously with this application and should state in the official letter of such application that s/he is taking it out of its turn because of possible interference.

Should an appeal be taken in this application or should this application become involved in an interference, consideration of the appeal and the interference will be expedited by all Patent and Trademark Office officials concerned, contingent likewise upon diligent prosecution by the applicant.

Inquiries regarding this decision should be directed to Lissi Marquis at (571) 272-1596.

Lissi Marquis, Special Programs Examiner
Technology Center 2800
Semiconductors, Electrical and Optical
Systems and Components

UNITED STATES PATENT AND TRADEMARK OFFICE

Commissioner for Patents
United States Patent and Trademark Office
P.O. Box 1450
Alexandria, VA 22313-1450
www.uspto.gov

OBLON, SPIVAK, MCCLELLAND MAIER & NEUSTADT, P.C.
1940 DUKE STREET
ALEXANDRIA VA 22314

**COPY MAILED**

MAR 1 3 2009

**OFFICE OF PETITIONS**

| | | |
|---|---|---|
| In re Application of | : | |
| Goda et al. | : | |
| Application No. 10/954,238 | : | DECISION ON PETITION |
| Filed: 10/01/2004 | : | |
| Attorney Docket No. 259756US2 | : | |

This is a decision on the petition under 37 CFR 1.181, filed November 5, 2008, to withdraw the holding of abandonment for the above-identified application.

On November 5, 2007, the Office mailed a final Office action, which set a three-month shortened statutory period for reply. On April 7, 2008, applicants filed an amendment, a request for an extension of time for response within the second month, and a $460.00 extension of time fee. On May 5, 2008, applicants filed a notice of appeal, a $510.00 notice of appeal fee, a request for an extension of time for response within the third month, and a $ 590.00 extension of time fee. On July 8, 2008, the Examiner mailed an Advisory Action indicating that the amendment of April 7, 2008, did not place the application in condition for allowance.

The Office notes that the filing of the notice of appeal set a two-month extendable period from May 5, 2008 (the date of receipt of the notice of appeal) for applicants to submit an appeal brief or other appropriate reply. Nevertheless, on October 21, 2008, the Office notified applicants that the application was abandoned. Specifically, the Office mailed a Notice of Abandonment, stating that the application became abandoned because of "Applicant's failure to timely file a proper reply to the Office letter mailed on 05 November 2007."

On November 5, 2008, applicants filed the present petition, a Request for Continued Examination (RCE), a $810.00 RCE fee, an amendment under 37 CFR 1.114, replacement drawings, a request for an extension of time for response within the fourth month, and a $1,730.00 extension of time fee. On petition, applicants assert that the application is not abandoned and request that the Office withdraw the holding of abandonment. Applicants state that the reply submitted on November 5, 2008, is timely as it is accompanied by a request for an extension of time for response within the fourth month.

The Office finds that applicants' assertions are correct. As previously stated, the filing of the notice of appeal set a two-month extendable period from May 5, 2008 (the date of receipt of the notice of appeal) for applicants to submit an appeal brief or other appropriate reply. Applicants appropriately extended the period for response an additional four months under 37 CFR 1.136(a). Therefore, an appeal brief or other appropriate response (i.e. a RCE and a submission) were due on or before November 5, 2008. Accordingly, the reply was timely filed.

The petition under 37 CFR 1.181 is **granted**. The Notice of Abandonment was mailed in error and is hereby withdrawn.

As applicants paid a $590.00 fee for an extension of time for response within the third month on May 5, 2008, the $460.00 fee for an extension of time for response in the second month paid on April 7, 2008, is unnecessary. Accordingly, the Office will refund the $460.00 fee to applicants' credit card.

This matter is being referred to the Technology Center Art Unit 2893 for processing the RCE filed on November 5, 2008.

Telephone inquiries concerning this matter may be directed to the undersigned at (571) 272-3211. All other inquiries concerning either the examination procedures or status of the application should be directed to the Technology Center.

C. T. Donnell

Christina Tartera Donnell
Senior Petitions Attorney
Office of Petitions

UNITED STATES PATENT AND TRADEMARK OFFICE

Commissioner for Patents
United States Patent and Trademark Office
P.O. Box 1450
Alexandria, VA 22313-1450
www.uspto.gov

**KOLISCH HARTWELL, P.C.**
**200 PACIFIC BUILDING**
**520 SW YAMHILL STREET**
**PORTLAND OR 97204**

COPY MAILED
JUL 0 6 2006
OFFICE OF PETITIONS

| | | |
|---|---|---|
| In re Application of | : | |
| Au, B.L. | : | |
| Application No. 10/954,249 | : | ON PETITION |
| Filed: September 29, 2004 | : | |
| Attorney Docket No. RPT 301 | : | |

This is a decision on the petition under 37 CFR 1.102(c)(1), filed June 1, 2006, to make the above-identified application special based on applicant's age as set forth in M.P.E.P. § 708.02, Section IV.

The petition is **GRANTED**.

A grantable petition to make an application special under 37 CFR 1.102(c)(1) and MPEP § 708.02, Section IV: Applicant's Age must be accompanied by evidence showing that at least one of the applicants is 65 years of age, or more, such as a birth certificate or a statement by applicant. No fee is required.

The instant petition includes a Declaration from the applicant, B.L. Au. Accordingly, the above-identified application has been accorded "special" status.

Telephone inquiries concerning this decision should be directed to the undersigned at 571-272-3206. All other inquiries concerning either the examination or status of the application should be directed to the Technology Center.

This matter is being referred to the Technology Center Art Unit 3635 for action on the merits commensurate with this decision.

Liana Chase
Petitions Examiner
Office of Petitions

UNITED STATES PATENT AND TRADEMARK OFFICE

Commissioner for Patents
United States Patent and Trademark Office
P.O. Box 1450
Alexandria, VA 22313-1450
www.uspto.gov

**ARMSTRONG, KRATZ, QUINTOS,**
**HANSON & BROOKS, LLP**
**1725 K STREET, NW**
**SUITE 1000**
**WASHINGTON DC 20006**

COPY MAILED
JUL 0 3 2006
OFFICE OF PETITIONS

| | | |
|---|---|---|
| In re Application of | : | |
| Naoto Kogure et al | : | |
| Application No. 10/954,284 | : | ON PETITION |
| Filed: October 1, 2004 | : | |
| Attorney Docket No. 040496 | : | |

This is a decision on the petition, filed June 30, 2006, under 37 CFR 1.313(c)(2) to withdraw the above-identified application from issue after payment of the issue fee.

The petition is **GRANTED**.

The above-identified application is withdrawn from issue for consideration of a submission under 37 CFR 1.114 (request for continued examination). See 37 CFR 1.313(c)(2).

**Petitioner is advised that the issue fee paid on June 20, 2006, in the above-identified application cannot be refunded. If, however, the above-identified application is again allowed, petitioner may request that it be applied towards the issue fee required by the new Notice of Allowance.**[1]

Telephone inquiries should be directed to the undersigned at (571) 272-3208.

The examiner of Technology Center AU 2831 will consider the request for continued examination under 37 CFR 1.114.

Karen Creasy

Karen Creasy
Petitions Examiner
Office of Petitions

---

[1] The request to apply the issue fee to the new Notice may be satisfied by completing and returning the new Issue Fee Transmittal Form PTOL-85(b), which includes the following language thereon: "Commissioner for Patents is requested to apply the Issue Fee and Publication Fee (if any) or re-apply any previously paid issue fee to the application identified above." Petitioner is advised that, whether a fee is indicated as being due or not, the Issue Fee Transmittal Form **must** be completed and timely submitted to avoid abandonment. Note the language in bold text on the first page of the Notice of Allowance and Fee(s) Due (PTOL-85).

UNITED STATES PATENT AND TRADEMARK OFFICE

Commissioner for Patents
United States Patent and Trademark Office
P.O. Box 1450
Alexandria, VA 22313-1450
www.uspto.gov

**RADER FISHMAN & GRAUER PLLC**
**LION BUILDING**
**1233 20TH STREET N.W., SUITE 501**
**WASHINGTON DC 20036**

MAILED

MAY 04 2010

OFFICE OF PETITIONS

| | | |
|---|---|---|
| In re Application of | : | |
| Makibi Nakamura et al | : | |
| Application No. 10/954,308 | : | DECISION ON PETITION |
| Filed: October 1, 2004 | : | |
| Attorney Docket No. SON-3108 | : | |

This is a decision on the petition under the unintentional provisions of 37 CFR 1.137(b), filed January 6, 2010, to revive the above-identified application.

The petition is **GRANTED**.

The petition satisfies the conditions for revival pursuant to the provisions of 37 CFR 1.137(b) in that (1) the reply in the form of the issue and publication fees; (2) the petition fee; and (3) the required statement of unintentional delay have been received. Accordingly, the reply to the Notice of Allowance mailed September 8, 2009, is accepted as having been unintentionally delayed.

Telephone inquiries concerning this decision should be directed to the undersigned at (571) 272-3208.

This application is being referred to the Office of Data Management to be processed into a patent.

/KOC/
Karen Creasy
Petitions Examiner
Office of Petitions

UNITED STATES PATENT AND TRADEMARK OFFICE

Commissioner for Patents
United States Patent and Trademark Office
P.O. Box 1450
Alexandria, VA 22313-1450
www.uspto.gov

**CHRISTIE, PARKER & HALE, LLP**
**PO BOX 7068**
**PASADENA CA 91109-7068**

**COPY MAILED**

APR 29 2008

**OFFICE OF PETITIONS**

| | | |
|---|---|---|
| In re Application of | : | |
| **SHIN**, Dong-Yong | : | |
| Application No. 10/954,329 | : | DECISION GRANTING PETITION |
| Filed: September 29, 2004 | : | UNDER 37 CFR 1.313(c)(2) |
| Attorney Docket No. **53132/P849** | : | |

This is a decision on the petition under 37 CFR 1.313(c)(2), filed April 24, 2008, to withdraw the above-identified application from issue after payment of the issue fee.

The petition is **GRANTED.**

The above-identified application is withdrawn from issue for consideration of a submission under 37 CFR 1.114 (request for continued examination). *See* 37 CFR 1.313(c)(2).

***Petitioner is advised that the issue fee paid on March 25, 2008 cannot be refunded. If, however, this application is again allowed, petitioner may request that it be applied towards the issue fee required by the new Notice of Allowance.***[1]

There is no indication that the person signing the petition was ever given a power of attorney or authorization of agent to prosecute the above-identified application. However, the signature of Mr. Jun-Young E. Jeon appearing on the petition shall constitute a representation to the United States Patent and Trademark Office that he is authorized to represent the particular party on whose behalf he acts in accordance with 37 CFR 1.34(a).

Telephone inquiries should be directed to Monica A. Graves at (571) 272-7253.

This application is being referred to Technology Center AU 2871 for processing of the request for continued examination under 37 CFR 1.114 and for consideration of the concurrently filed information disclosure statement.

Monica A. Graves
Petitions Examiner
Office of Petitions

---

[1] *The request to apply the issue fee to the new Notice may be satisfied by completing and returning the new Part B – Fee(s) Transmittal Form (along with any balance due at the time of submission). Petitioner is advised that the Issue Fee Transmittal Form* ***must*** *be completed and timely submitted to avoid abandonment of the application.*

UNITED STATES PATENT AND TRADEMARK OFFICE

Commissioner for Patents
United States Patent and Trademark Office
P.O. Box 1450
Alexandria, VA 22313-1450
www.uspto.gov

CHRISTIE PARKER & HALE, LLP
P.O. BOX 7068
PASADENA, CA 91109-7068

COPY MAILED
SEP 18 2008

In re Application of :
Dong-Yong Shin :
Application No. 10/954,329 : ON PETITION
Filed: September 29, 2004 :
Attorney Docket No. 53132/P849

This is a decision on the petition, filed September 17, 2008 under 37 CFR 1.313(c)(2) to withdraw the above-identified application from issue after payment of the issue fee.

The petition is **GRANTED**.

The above-identified application is withdrawn from issue for consideration of a submission under 37 CFR 1.114 (request for continued examination). See 37 CFR 1.313(c)(2).

**Petitioner is advised that the issue fee paid on August 26, 2008 in the above-identified application cannot be refunded. If, however, the above-identified application is again allowed, petitioner may request that it be applied towards the issue fee required by the new Notice of Allowance.**[1]

Telephone inquiries should be directed to Irvin Dingle at (571) 272-3210.

This matter is being referred to Technology Center AU 2629 for processing of the request for continued examination under 37 CFR 1.114 and for consideration of the concurrently filed Information Disclosure Statement.

Irvin Dingle
Petitions Examiner
Office of Petitions

[1] The request to apply the issue fee to the new Notice may be satisfied by completing and returning the new Issue Fee Transmittal Form PTOL-85(b), which includes the following language thereon: Commissioner for Patents is requested to apply the Issue Fee and Publication Fee (if any) or re-apply any previously paid issue fee to the application identified above. Petitioner is advised that, whether a fee is indicated as being due or not, the Issue Fee Transmittal Form **must** be completed and timely submitted to avoid abandonment. Note the language in bold text on the first page of the Notice of Allowance and Fee(s) Due (PTOL-85).

## SPE RESPONSE FOR CERTIFICATE OF CORRECTION

Paper No.: _____

DATE : 1-14-09

TO SPE OF : ART UNIT 1794

SUBJECT : Request for Certificate of Correction for Appl. No.: 10954362 Patent No.: 7172798

Please respond to this request for a certificate of correction within 7 days.

**FOR IFW FILES:**

Please review the requested changes/corrections as shown in the **COCIN** document(s) in the IFW application image. No new matter should be introduced, nor should the scope or meaning of the claims be changed.

Please complete the response (see below) and forward the completed response to scanning using document code **COCX**.

**FOR PAPER FILES:**

Please review the requested changes/corrections as shown in the attached certificate of correction. Please complete this form (see below) and forward it with the file to:

**Certificates of Correction Branch (CofC)**
**South Tower - 9A22**
**Palm Location 7580**

Valerie Jackson
**Certificates of Correction Branch**
**703-308-9390 ext.** 114

**Thank You For Your Assistance**

**The request for issuing the above-identified correction(s) is hereby:**
Note your decision on the appropriate box.

- ☑ **Approved** — All changes apply.
- ☐ **Approved in Part** — Specify below which changes **do not** apply.
- ☐ **Denied** — State the reasons for denial below.

**Comments:** _____

KDR
**SPE**

1794
**Art Unit**

UNITED STATES PATENT AND TRADEMARK OFFICE

Commissioner for Patents
United States Patent and Trademark Office
P.O. Box 1450
Alexandria, VA 22313-1450
www.uspto.gov

George B. F. Yee
Townsend and Townsend and Crew, LLP
Two Embarcadero Center
Eighth Floor
San Francisco, CA 94111-3834

**MAILED**

NOV 28 2005

**Technology Center 2100**

In re Application of: Kano
Application No. 10/954,385
Filed: September 29, 2004
For: METHOD FOR MANAGING VOLUME GROUPS CONSIDERING STORAGE TIERS

DECISION ON PETITION TO MAKE SPECIAL (ACCELERATED EXAMINATION) UNDER M.P.E.P. §708.02 (VIII)

This is a decision on the petition to make special under 37 C.F.R. §102(d) and M.P.E.P. §708.02(VIII): Accelerated Examination, filed on May 31, 2005.

The Petition is **GRANTED**.

M.P.E.P. §708.02, Section VIII which sets out the prerequisites for a grantable petition for Accelerated Examination under 37 C.F.R. §1.102(d) states in relevant part:

A new application (one which has not received any examination by the examiner) may be granted special status provided that applicant (and this term includes applicant's attorney or agent) complies with each of the following items:

(a) Submits a petition to make special accompanied by the fee set forth in 37 CFR 1.17(h);

(b) Presents all claims directed to a single invention, or if the Office determines that all the claims presented are not obviously directed to a single invention, will make an election without traverse as a prerequisite to the grant of special status;

(c) Submits a statement(s) that a pre-examination search was made, listing the field of search by class and subclass, publication, Chemical Abstracts, foreign patents, etc. The pre-examination search must be directed to the invention as claimed in the application for which special status is requested. A search made by a foreign patent office satisfies this requirement;

(d) Submits one copy each of the references deemed most closely related to the subject matter encompassed by the claims if said references are not already of record; and

(e) Submits a detailed discussion of the references, which discussion points out, with the particularity required by 37 CFR 1.111 (b) and (c), how the claimed subject matter is patentable over the references.

Petition to Make Special **GRANTED** since all of the requirements for special status under MPEP §708.02(VIII) have been met.

The application file is being forwarded to the Examiner for accelerated examination in accordance with M.P.E.P. §708.02, Section VIII. If the application is subsequently allowed, it will be given priority for printing. See M.P.E.P. §1309.

Brian L. Johnson
Special Program Examiner
Technology Center 2100
Computer Architecture, Software and Information Security
571-272-3595

UNITED STATES PATENT AND TRADEMARK OFFICE

Commissioner for Patents
United States Patent and Trademark Office
P.O. Box 1450
Alexandria, VA 22313-1450
www.uspto.gov

JONES & SMITH LLP
2777 ALLEN PARKWAY
SUITE 800
HOUSTON TX 77019

**MAILED**

APR 26 2010

**OFFICE OF PETITIONS**

In re Application of
Brannon, et al.
Application No. 10/954,398
Filed: September 30, 2004
Attorney Docket Number: 020569-03000

: ON REQUEST FOR
: RECONSIDERATION OF
: PATENT TERM ADJUSTMENT

This is a decision on the petition under 37 CFR 1.705(b), filed December 29, 2009. Applicants believe that the correct total PTA to date is 245 days, not 200 days as calculated by the Office as of the mailing of the initial determination of patent term adjustment. Applicants request this correction solely on the basis that the Office will take in excess of three years to issue this patent.

As the instant application for patent term adjustment requests reconsideration of the patent term adjustment as it relates to the Office's failure to issue the patent within 3 years of the filing date, the application for patent term adjustment under 37 CFR 1.705(b) is **DISMISSED as PREMATURE**.

Knowledge of the actual date the patent issues is required to calculate the amount, if any, of additional patent term patentee is entitled to for Office failure to issue the patent within 3 years. See § 1.702(b). (This is true even where a request for continued examination (RCE) was filed). The computer will not undertake the § 1.702(b) calculation until the actual date of issuance of the patent has been determined. Likewise, the computer will not calculate any further Office delay under § 1.702(a)(4) or applicant delay under § 1.704(c)(10) until the actual date of issuance of the patent has been determined. As such, the Office can not make a determination on the correctness of the patent term adjustment until the patent has issued.

Requesting reconsideration of the patent term adjustment to be indicated on the patent under 37 CFR 1.705(b) based on the initial determination of patent term adjustment and a projected issuance date of the patent (or even the filing date of the request for continued examination) is premature. Accordingly, it is appropriate to dismiss as premature such a request.

Rather than file a request for reconsideration of patent term adjustment under 37 CFR 1.705(b) contesting the 37 CFR 1.702(b) calculation at the time of the mailing of the notice of allowance, applicants are advised that they may wait until the time of the issuance of the patent and file a

request for reconsideration of the patent term adjustment pursuant to 37 CFR 1.705(d). As the USPTO does not calculate the amount of time earned pursuant to 37 CFR 1.702(b) until the time of the issuance of the patent, the Office will consider any request for reconsideration of the patent term adjustment due to an error in the calculation of 37 CFR 1.702(b) to be timely if the request for reconsideration is filed within two months of the issuance of the patent. However, as to all other bases for contesting the initial determination of patent term adjustment received with the notice of allowance, applicant must timely file an application for patent term adjustment prior to the payment of the issue fee[1].

Receipt of the $200.00 fee set forth in 37 CFR 1.18(e) for consideration of the application for patent term adjustment is acknowledged.

Any request for reconsideration of the patent term adjustment indicated on the patent must be timely filed within 2 months after issuance pursuant to 37 CFR 1.705(d).

The application is being referred to the Office of Data Management for issuance of the patent.

Telephone inquiries specific to this decision should be directed to Petitions Attorney Cliff Congo at (571) 272-3207.

Anthony Knight
Director
Office of Petitions

---

[1] For example, if applicant disputes both the calculation of patent term adjustment under 37 CFR 1.702(a)(1) for Office failure to mail a first Office action or notice of allowance not later than fourteen months after the date on which the application was filed and under 37 CFR 1.702(b) for Office failure to issue a patent within three years of the actual filing date of the application, then applicant must still timely file an application for patent term adjustment prior to the payment of the issue fee to contest the calculation of Office delay in issuing a first Office action or notice of allowance. See 37 CFR 1.705(b) and 35 U.S.C. 154(b)(3)(B). A dispute as to the calculation of the §1.702(a)(1) period raised on request for reconsideration of patent term adjustment under 37 CFR 1.705(d) will be dismissed as untimely filed.

UNITED STATES PATENT AND TRADEMARK OFFICE

Commissioner for Patents
United States Patent and Trademark Office
P.O. Box 1450
Alexandria, VA 22313-1450
www.uspto.gov

**Pabst Patent Group, LLP**
**1545 Peachtree Street NE**
**Suite 320**
**Atlanta, GA 30309**

MAILED

OCT 21 2009

OFFICE OF PETITIONS

| | | |
|---|---|---|
| In re Application of | : | |
| Jules S. Jacob et al. | : | |
| Application No. 10/954,423 | : | DECISION ON PETITION |
| Filed: September 30, 2004 | : | |
| Attorney Docket No. SPS 107 | : | |

This is a decision on the petition under the unintentional provisions of 37 CFR 1.137(b), filed July 30, 2009, to revive the above-identified application.

The petition is **GRANTED**.

The application became abandoned for failure to reply in a timely manner to the non-final Office action mailed November 26, 2008, which set a shortened statutory period for reply of three (3) months. No extensions of time under the provisions of 37 CFR 1.136(a) were obtained. Accordingly, the application became abandoned on February 27, 2009.

The petition satisfies the requirements of 37 CFR 1.137(b) in that petitioner has supplied (1) the reply in the form of an amendment after non-final, (2) the petition fee of $810, and (3) a proper statement of unintentional delay. Accordingly, the amendment is accepted as being unintentionally delayed.

Telephone inquiries concerning this decision should be directed to Kimberly Inabinet at (571) 272-4618.

This application is being referred to Technology Center AU 1616 for appropriate action by the Examiner in the normal course of business on the reply received July 30, 2009.

Carl Friedman
Petitions Examiner
Office of Petitions

UNITED STATES PATENT AND TRADEMARK OFFICE

Commissioner for Patents
United States Patent and Trademark Office
P.O. Box 1450
Alexandria, VA 22313-1450
www.uspto.gov

**Testa, Hurwitz & Thibeault, LLP**
**High Street Tower**
**125 High Street**
**Boston, MA 02110**

COPY MAILED

MAY 22 2009

OFFICE OF PETITIONS

| | | |
|---|---|---|
| In re Application of | : | |
| James Wight | : | |
| Application No. 10/954,429 | : | DECISION ON PETITION |
| Filed: September 30, 2004 | : | TO WITHDRAW |
| Attorney Docket No. ICE-031C1 | : | FROM RECORD |
| | : | |

This is a decision on the Request to Withdraw as attorney or agent of record under 37 C.F.R. § 1.36(b), filed December 29, 2005.

The request is **moot because a revocation of power of attorney has been filed**.

A review of the file record indicates that the power of attorney to Jason P. Fiorillo and all attorneys/agents of record has been revoked by the assignee of the patent application on January 16, 2006. Accordingly, the request to withdraw under 37 C.F.R. § 1.36(b) is moot.

All future communications from the Office will continue to be directed to the below-listed address until otherwise notified by applicant.

Telephone inquires concerning this decision should be directed to Kimberly Inabinet at 571-272-4618.

Kimberly Inabinet
Petitions Examiner
Office of Petitions

cc: Stolowitz Ford Cowger, LLP
621 SW Morrison Street
Suite 600
Portland, OH 97205

UNITED STATES PATENT AND TRADEMARK OFFICE

Commissioner for Patents
United States Patent and Trademark Office
P.O. Box 1450
Alexandria, VA 22313-1450
www.uspto.gov

**JONES DAY**
**222 EAST 41ST ST**
**NEW YORK NY 10017**

MAILED

JUL 02 2010

OFFICE OF PETITIONS

| | | |
|---|---|---|
| In re Application of | : | |
| Glenda G. Anderson | : | |
| Application No. 10/954,443 | : | ON PETITION |
| Filed: September 29, 2004 | : | |
| Attorney Docket No. 11373-009-999 | : | |

This is a decision on the petition under the unintentional provisions of 37 CFR 1.137(b), filed May 5, 2010, to revive the above-identified application.

The petition is **GRANTED**.

The application became abandoned for failure to properly reply within the meaning of 37 CFR 1.113 to the final Office action of August 12, 2009. The proposed reply required for consideration of a petition to revive must be a Notice of Appeal (and appeal fee required by 37 CFR 41.20(b)(2), an amendment that *prima facie* places the application in condition for allowance, a Request for Continued Examination and submission (37 CFR 1.114), or the filing of a continuing application under 37 CFR 1.53(b). See MPEP 711.03(c)(III)(A)(2). A three (3) month extension of time pursuant to the provisions of 37 CFR 1.136(a) were obtained. Accordingly, the date of abandonment of this application is February 13, 2010.

The petition satisfies the requirements of 37 CFR 1.137(b) in that petitioner has supplied (1) the reply in the form of a Request for Continued Examination (RCE) and fee of $405, (previously filed on February 11, 2010) and the submission required by 37 CFR 1.114 filed herewith petition; (2) the petition fee of $810; and (3) a proper statement of unintentional delay.

Telephone inquiries concerning this decision should be directed to the undersigned at (571) 272-2991.

This application is being referred to Technology Center AU 1631 for processing of the previously filed RCE and for appropriate action by the Examiner in the normal course of business on the amendment and the information disclosure statement submitted in accordance with 37 CFR 1.114.

Terri Johnson
Petitions Examiner
Office of Petitions

UNITED STATES PATENT AND TRADEMARK OFFICE

COMMISSIONER FOR PATENTS
UNITED STATES PATENT AND TRADEMARK OFFICE
P.O. BOX 1450
ALEXANDRIA, VA 22313-1450
www.uspto.gov

COPY MAILED
JUL 21 2006
OFFICE OF PETITIONS

BLAKELY SOKOLOFF TAYLOR & ZAFMAN
12400 WILSHIRE BOULEVARD
SEVENTH FLOOR
LOS ANGELES, CA 90025-1030

| | | |
|---|---|---|
| In re Application of | : | |
| Lalonde, et. al. | : | DECISION ON REQUEST |
| Application No. 10/954,449 | : | TO WITHDRAW FROM |
| Filed: September 29, 2004 | : | RECORD |
| Attorney Docket No. 03801P214 | : | |

This is a decision on the Request to Withdraw as attorney or agent of record under 37 CFR § 1.36(b) or 37 CFR § 10.40, filed on November 15, 2004.

The request to withdraw as attorney or agent is **NOT APPROVED** as moot.

A review of the file record indicates that the power of attorney to all the attorneys or agents associated with Customer No. 08791 have been revoked by the assignee of the patent application, on July 29, 2005. Accordingly, the request to withdraw under 37 CFR § 1.36(b) is moot.

The correspondence address of record has been changed and the new correspondence address is the address indicated below.

Telephone inquiries concerning this decision should be directed to Andrea Smith at (571) 272-3226.

Andrea Smith
Petitions Examiner
Office of Petitions

cc: SCHWEGMAN, LUNDBERG, WOESSNER & KLUTH/EBAY
P.O. BOX 2938
MINNEAPOLIS, MN 55402

UNITED STATES PATENT AND TRADEMARK OFFICE

Commissioner for Patents
United States Patent and Trademark Office
P.O. Box 1450
Alexandria, VA 22313-1450
www.uspto.gov

**MURATA MANUFACTURING COMPANY, LTD.**
**C/O KEATING & BENNETT, LLP**
**8180 GREENSBORO DRIVE, SUITE 850**
**MCLEAN VA 22102**

**COPY MAILED**

DEC 1 2 2007

**OFFICE OF PETITIONS**

In re Application of
**KIDOH**, Hideo
Application No. 10/954,477
Filed: October 1, 2004
Attorney Docket No. **36856.1293**

DECISION GRANTING PETITION
UNDER 37 CFR 1.313(c)(2)

This is a decision on the petition under 37 CFR 1.313(c)(2), filed December 5, 2007, to withdraw the above-identified application from issue after payment of the issue fee.

The petition is **GRANTED.**

The above-identified application is withdrawn from issue for consideration of a submission under 37 CFR 1.114 (request for continued examination). *See* 37 CFR 1.313(c)(2).

***Petitioner is advised that the issue fee paid on*** November 28, 2007 ***cannot be refunded. If, however, this application is again allowed, petitioner may request that it be applied towards the issue fee required by the new Notice of Allowance.***[1]

Telephone inquiries should be directed to Monica A. Graves at (571) 272-7253.

This application is being referred to Technology Center AU 2817 for processing of the request for continued examination under 37 CFR 1.114 and for consideration of the concurrently filed information disclosure statement.

Frances Hicks
Petitions Examiner
Office of Petitions

[1] *The request to apply the issue fee to the new Notice may be satisfied by completing and returning the new Part B – Fee(s) Transmittal Form (along with any balance due at the time of submission). Petitioner is advised that the Issue Fee Transmittal Form* ***must*** *be completed and timely submitted to avoid abandonment of the application.*

UNITED STATES PATENT AND TRADEMARK OFFICE

COMMISSIONER FOR PATENTS
UNITED STATES PATENT AND TRADEMARK OFFICE
P.O. BOX 1450
ALEXANDRIA, VA 22313-1450
www.uspto.gov

Cermak & Kenealy, LLP
P. O. Box 7518
Alexandria, VA 22307

**COPY MAILED**

FEB 16 2005

**OFFICE OF PETITIONS**

| | | |
|---|---|---|
| In re Application of | : | |
| Ephraim Gutmark, et al. | : | |
| Application No. 10/954,482 | : | ON PETITION |
| Filed: October 1, 2004 | : | |
| Attorney Docket No. 003-098C1 | : | |

This is in response to the petition under 37 CFR 1.47(a), filed January 18, 2005.

The petition is granted.

Petitioner has shown that the non-signing inventor has refused to join in the filing of the above-identified application.

The above-identified application and papers have been reviewed and found in compliance with 37 CFR 1.47(a). This application is hereby accorded Rule 1.47(a) status.

As provided in 37 CFR 1.47(a), this Office will forward notice of this application's filing to the non-signing inventor at the address given in the petition. Notice of the filing of this application will also be published in the Official Gazette.

The application file is being referred to the Office of Initial Patent Examination for further processing.

Telephone inquiries regarding this decision should be directed to the undersigned at (571) 272-3223.

Marianne E. Jenkins

Marianne E. Jenkins
Petitions Examiner
Office of Petitions
Office of the Deputy Commissioner
for Patent Examination Policy

UNITED STATES PATENT AND TRADEMARK OFFICE

COMMISSIONER FOR PATENTS
UNITED STATES PATENT AND TRADEMARK OFFICE
P.O. BOX 1450
ALEXANDRIA, VA 22313-1450
www.uspto.gov

Christian Oliver Paschereit
Lohengringstrasse 29
D-14109 Berlin, Germany

**COPY MAILED**

FEB 16 2005

**OFFICE OF PETITIONS**

In re Application of
Ephraim Gutmark; and Christian Oliver Paschereit
Application No. 10/954,482
Filed: October 1, 2004
For: BURNER

Dear Mr. Paschereit:

You are named as a joint inventor in the above-identified United States patent application, filed under the provisions of 35 U.S.C. 116 (United States Code), and 37 CFR 1.47(a), Rules of Practice in Patent Cases. Should a patent be granted on the application you will be designated therein as a joint inventor.

As a named inventor you are entitled to inspect any paper in the file wrapper of the application, order copies of all or any part thereof (at a prepaid cost per 37 CFR 1.19) or make your position of record in the application. Alternatively, you may arrange to do any of the preceding through a registered patent attorney or agent presenting written authorization from you. If you care to join the application, counsel of record (see below) would presumably assist you. Joining the application would entail the filing of an appropriate oath or declaration by you pursuant to 37 CFR 1.63.

Telephone inquiries regarding this communication should be directed to Marianne Jenkins at (571) 272-3223. Requests for information regarding your application should be directed to the File Information Unit at (703) 308-2733. Information regarding how to pay for and order a copy of the application, or a specific paper in the application, should be directed to the Certification Division at (703) 308-9726 or 1 (800) 972-6382 (outside the Washington, DC area).

Marianne E. Jenkins
Petitions Examiner
Office of Petitions
Office of the Deputy Commissioner
for Patent Examination Policy

cc: Cermak & Kenealy LLP
P. O. Box 7518
Alexandria, VA 22307

UNITED STATES PATENT AND TRADEMARK OFFICE

Commissioner for Patents
United States Patent and Trademark Office
P.O. Box 1450
Alexandria, VA 22313-1450
www.uspto.gov

**HELLER EHRMAN LLP**
**4350 LA JOLLA VILLAGE DRIVE, 7TH FLOOR**
**SAN DIEGO, CA 92122**

**MAILED**

APR 2 6 2010

**OFFICE OF PETITIONS**

| | | |
|---|---|---|
| In re Application of | : | |
| Ohnishi et al. | : | DECISION ON PETITION |
| Application No. 10/954,495 | : | TO WITHDRAW |
| Filed: September 29, 2004 | : | FROM RECORD |
| Attorney Docket No. 39888-0001CP-2 | : | |

This is a decision on the request to withdraw as attorney of record under 37 C.F.R. § 1.36, filed February 25, 2010.

The request is **DISMISSED**.

A review of the file record indicates that Goodwin Procter LLP does not have power of attorney in this patent application. Accordingly, the request to withdraw under 37 C.F.R. § 1.36(b) is not applicable.

A review of USPTO records reveals that the Power of Attorney filed November 18, 2008 was erroneously accepted on December 15, 2008. The Power of Attorney by Assignee submitted November 18, 2008 did not include a proper Statement under 37 CFR 3.73(b) since it did not include all assignees. Since no proper Statement under 37 CFR § 3.73(b) was submitted the request was improper. Accordingly, there is no Power of Attorney in the above-identified application. Further, the Correspondence Address will revert back to the address designated in the Oath/Declaration filed June 29, 2005. Therefore, all future communications from the Office will be directed solely to the above current address of record until proper instructions have been received.

Further, a courtesy copy of this decision is being mailed to the address given on the petition; however, the Office will mail all future correspondence solely to the address of record.

A Notice of Appeal was filed on January 11, 2010 and currently requires a further response.

Telephone inquires concerning this decision should be directed to the undersigned at 571-272-7751.

Joan Olszewski

Joan Olszewski
Petitions Examiner
Office of Petitions

cc: Goodwin Procter LLP
Attn: Patent Administrator
135 Commonwealth Drive
Menlo Park CA 94025-1105

UNITED STATES PATENT AND TRADEMARK OFFICE

Commissioner for Patents
United States Patent and Trademark Office
P.O. Box 1450
Alexandria, VA 22313-1450
www.uspto.gov

Date :07/12/07

Patent No. : 7176246 B2
Ser. No. : 10/954,507
Inventor(s) : RODRIGUEZ, DOMINGO
Issued : 02/13/07
Title : **PROCESS FOR CONVERTING HEAVY CRUDE OILS AND PETROLEUM COKE TO SYNGAS USING EXTERNAL SOURCE OF RADIATION**
Docket No. : 03-594-2

Re: Request for Certificate of Correction

Consideration has been given your request for the issuance of a certificate of correction for the above-identified patent under the provisions of Rule(s) 1.322 and/or 1.323.

Assignees' names and addresses (assignment data) printed in a patent, are based *solely* on information supplied in the appropriate space for identifying the assignment data, i.e., item 3 of the Issue Fee Transmittal Form PTOL-85B. Granting of a request under 37 CFR 3.81(b) is required to correct applicant's error providing ***incorrect or erroneous*** assignment data, *before* issuance of a Certificate of Correction, under 37 CFR 1.323 *(see Manual of Patent Examining Procedures (M.P.E.P) Chp.1400, sect. 1481).* This procedure is required *at any time after the issue fee is paid*, including after issuance of the patent.

In view of the foregoing, your request, in this mater, is hereby denied.

A request to correct the Assignee under 37 CFR 3.81(b) should include:

A. **the processing fee set forth in 37 CFR 1.117(h) (currently $130);**
B. a statement that the failure to include the correct assignee name on the PTOL-85B was inadvertent; and
C. a copy of the Notice of Recordation of Assignment Document, reflecting the reel and frame number where the assignment(s) is recorded and/or reflecting proof of *the date* the assignment was submitted for recordation.

*In the Request*, Applicant(s) may request that the file be forwarded to Certificates of Correction Branch, for issuance of a Certificate of Correction, if the Request is granted.

Any request under 37 CFR 3.81(b) should be directed to the following address or facsimile number:

By mail: Mail Stop PETITIONS

Commissioner for Patents
Post Office Box 1450
Alexandria, VA 22313-1450

By hand: Customer Service Window
Mail Stop Petitions
Randolph Building
401 Dulany Street
Alexandria, VA 22314

By fax: (703) 872-9306
ATTN: Office of Petitions

If a fee (currently $100) was previously submitted for consideration of a Request for Certificate of Correction, under CFR 1.323, to correct assignment data, , no additional fee is required.

**Lamonte M. Newsome**
For Cecelia Newman
Decisions & Certificates
of Correction Branch
(703) 308-9390 #112 or (703) 308-8309

**BACHMAN & LAPOINTE, P.C.**
**900 CHAPEL STREET**
**SUITE 1201**
**NEW HAVEN CT 06510**

LMN

UNITED STATES PATENT AND TRADEMARK OFFICE

Commissioner for Patents
United States Patent and Trademark Office
P.O. Box 1450
Alexandria, VA 22313-1450
www.uspto.gov

**COPY MAILED**

SEP 17 2007

**OFFICE OF PETITIONS**

BACHMAN & LAPOINTE, P.C.
900 CHAPEL STREET
SUITE 1201
NEW HAVEN CT 06510

In re Patent No. 7,176,246 :
Issue Date: February 13, 2007 :
Application No. 10/954,507 : ON PETITION
Filed: September 29, 2004 :
Attorney Docket No. 03-594-2 :

This is a decision on the petition filed August 17, 2007, which is being treated as a request under 37 CFR 3.81(b)[1] to correct the name of the assignee on the front page of the above-identified patent by way of a Certificate of Correction.

The petition is **Dismissed**.

Any request for reconsideration must be submitted within TWO (2) MONTHS from the mail date of this decision. Extensions of time under 37 C.F.R. § 1.136(a) are not permitted. The reconsideration request should include a cover letter entitled "Renewed Petition". This is **not** a final agency action within the meaning of 5 U.S.C. § 704.

Any request for issuance of an application in the name of the assignee submitted after the date of the payment of the issue fee, and any request that a patent be corrected to state the name of assignee must :

(A) state the assignment was submitted for recordation as set forth in 37 CFR §3.11 before issuance of the patent;

(B) provide a request for a certificate of correction §1.323;

(C) provide the fee set forth in 37 CFR §1.20 (a) and

(D) provide the processing fee set forth in 37 CFR §1.17(i)

---

[1] *See* MPEP 1309, subsection II; and Official Gazette of June 22, 2004.

Petitioner has failed to provide (A). Petitioner has requested a certificate of correction, which reflects the assignment presented in reel 019215 frame 0191. However, review of the assignment records shows this assignment was recorded after the issuance of the patent. Assignment information printed on a patent is not updated after a patent is issued, and may not be reflective of the assignment recorded in the Office subsequent to the issuance of the patent. Accordingly, petitioner is not entitled to the certificate of correction as presented.

It should be noted that petitioner is entitled to the assignment reflected in reel 016991 frame 0092 which was recorded prior to the issuance of the patent. If petitioner desires, a renewed petition with new certificate of correction should be submitted.

Further correspondence with respect to this matter may be addressed as follows:

| | |
|---|---|
| By mail: | Mail Stop Petition<br>Commissioner for Patents<br>P.O. Box 1450<br>Alexandria, VA 22313-1450 |
| By facsimile: | (571) 273-8300 |
| By delivery service:<br>FedEx, UPS, DHL, etc.) | U.S. Patent and Trademark Office<br>Customer Service Window,<br>Randolph Building<br>401 Dulany Street<br>Alexandria, VA 22314 |

Telephone inquiries concerning this matter should be directed to the undersigned at (571) 272-3215.

Charlema Grant

Charlema Grant
Petitions Attorney
Office of Petitions

UNITED STATES PATENT AND TRADEMARK OFFICE

Commissioner for Patents
United States Patent and Trademark Office
P.O. Box 1450
Alexandria, VA 22313-1450
www.uspto.gov

BACHMAN & LAPOINTE, P.C.
900 CHAPEL STREET
SUITE 1201
NEW HAVEN CT 06510

COPY MAILED

JUN 1 8 2008

OFFICE OF PETITIONS

In re Patent No. 7,176,246 :
Issue Date: February 13, 2007 :
Application No. 10/954,507 : ON PETITION
Filed: September 29, 2004 :
Attorney Docket No. 03-594-2 :

This is a decision on the petition filed May 14, 2008, which is being treated as a request under 37 CFR 3.81(b)[1] to correct the name of the assignee on the front page of the above-identified patent by way of a Certificate of Correction.

The request is **GRANTED**.

Telephone inquiries concerning this decision may be directed to the undersigned at (571) 272-3215. Inquiries regarding the issuance of a certificate of correction should be directed to the Certificate of Correction Branch at (571) 272-4200.

The Certificates of Correction Branch will be notified of this decision granting the petition under 37 CFR 3.81(b) and directing issuance of the requested Certificate of Correction.

Charlema Grant
Petitions Attorney
Office of Petitions

[1] *See* MPEP 1309, subsection II; and Official Gazette of June 22, 2004.

UNITED STATES PATENT AND TRADEMARK OFFICE

UNITED STATES DEPARTMENT OF COMMERCE
United States Patent and Trademark Office
Address: COMMISSIONER FOR PATENTS
P.O. Box 1450
Alexandria, Virginia 22313-1450
www.uspto.gov

Carmen Patti Law Group, LLC
One N. LaSalle Street
44th Floor
Chicago, IL 60602

Mail Date: 05/21/2010

| | | |
|---|---|---|
| **Applicant** | : Stuart O. Goldman | : DECISION ON REQUEST FOR |
| **Patent Number** | : 7623649 | : RECALCULATION of PATENT |
| **Issue Date** | : 11/24/2009 | : TERM ADJUSTMENT IN VIEW |
| **Application No** | : 10/954,514 | : OF WYETH AND NOTICE OF INTENT TO |
| **Filed** | : 09/30/2004 | : ISSUE CERTIFICATE OF CORRECTION |
| | | : |

The Request for Recalculation is **GRANTED** to the extent indicated.

The patent term adjustment has been determined to be **1255** days. The USPTO will *sua sponte* issue a certificate of correction reflecting the amount of PTA days determined by the recalculation.

Prior to the issuance of the certificate of correction, the USPTO will afford patentee an opportunity to be heard and request reconsideration. Accordingly, patentee has **one month or thirty (30) days**, whichever is longer, to file a request for reconsideration of this patent term adjustment calculation. See 35 U.S.C. 154(b)(3)(B)(ii) and 37 CFR 1.322(a)(4). No extensions of time will be granted under 37 CFR 1.136.

Patentee should use document code PET.OP if electronically filing a request for reconsideration of this patent term adjustment calculation. The patentee must also include the information required by 37 CFR 1.705(b)(2) and the fee required by 37 CFR 1.18(e). If patentee does not file a timely request for reconsideration of this patent term adjustment calculation including the information required by 37 CFR 1.705(b)(2) and the fee required by 37 CFR 1.18(e), the USPTO will issue a certificate of correction reflecting the PTA determination noted above.

Patentee should be aware that in order to preserve the right to review in the United States District Court for the District of Columbia of the USPTO patent term adjustment determination, patentee must ensure that he or she also take the steps required under 35 U.S.C. 154(b)(4)(A) in a timely manner. Nothing in the request for recalculation should be construed as providing an alternative time frame for commencing a civil action under 35 U.S.C. 154(b)(4)(A).

Any questions concerning this decision should be directed to the Office of Patent Legal Administration at 571-272-7702.

UNITED STATES PATENT AND TRADEMARK OFFICE

Commissioner for Patents
United States Patent and Trademark Office
P.O. Box 1450
Alexandria, VA 22313-1450
www.uspto.gov

**VOLENTINE FRANCOS, & WHITT PLLC**
**ONE FREEDOM SQUARE**
**11951 FREEDOM DRIVE SUITE 1260**
**RESTON VA 20190**

COPY MAILED
NOV 17 2006
OFFICE OF PETITIONS

| | | |
|---|---|---|
| In re Application of | : | |
| French et al. | : | |
| Application No. 10/954,534 | : | ON PETITION |
| Filed: September 29, 2004 | : | |
| Attorney Docket No. CIRC.005D | : | |

This is a decision on the petition under 37 C.F.R. § 1.137(b), filed October 6, 2006, to revive the above-identified application.

The petition is **GRANTED.**

This matter is being referred to the Publishing Division for processing into a patent.

Telephone inquiries regarding this decision should be directed to the undersigned at (571) 272-3206.

Liana Walsh
Liana Chase Walsh
Petitions Examiner
Office of Petitions

UNITED STATES PATENT AND TRADEMARK OFFICE

UNITED STATES DEPARTMENT OF COMMERCE
United States Patent and Trademark Office
Address: COMMISSIONER FOR PATENTS
P.O. Box 1450
Alexandria, Virginia 22313-1450
www.uspto.gov

KIMBERLY-CLARK WORLDWIDE, INC.
Tara Pohlkotte
2300 Winchester Rd.
NEENAH, WI 54956

Mail Date: 04/21/2010

| | | |
|---|---|---|
| **Applicant** | : Paul T. Van Gompel | : DECISION ON REQUEST FOR |
| **Patent Number** | : 7569042 | : RECALCULATION of PATENT |
| **Issue Date** | : 08/04/2009 | : TERM ADJUSTMENT IN VIEW |
| **Appliction No** | : 10/954,536 | : OF WYETH |
| **Filed** | : 09/29/2004 | : |
| | | : |

The Patentee's Request for Recalculation is **DISMISSED.**

This Request is deemed ineligible for consideration for one or more of the following reasons:

(A). The patent for which PTA recalculation is requested is either a design or reissue application or is a reexamination proceeding;

(B). The patent for which PTA recalculation is requested resulted from a utility or plant application filed under 35 USC 111(a) before May 29, 2000 and no CPA filed in the application on/after May 29, 2000;

(C). The patent for which PTA recalculation is requested resulted from an international application in which the international filing date was before May 29, 2000 and no CPA filed in the application on/after May 29, 2000;

(D). The patent for which PTA recalculation is requested issued on/after March 2, 2010;

(E). The Request for Recalculation was filed more than 180 days after the grant date of the patent and the request was not filed within two months of a dismissal of a request for reconsideration of the of the patent term under 37 CFR 1.705(d);

(F). The Request for Recalculation is not solely limited to USPTO pre-Wyeth interpretation of 35 U.S.C. 154(b)(2)(A);

or

(G). A civil action was filed pursuant to 35 U.S.C. 154(b)(4)(A)concerning the same patent at issue in this request.

Patentee may file a reply to this decision dismissing the Request for Recalculation. Patentee must file such reply within one month or thirty days, whichever is longer, of the mail date of the decision dismissing the Request for Recalculation. No fee is required if patentee is asserting in the reply that the dismissal for ineligibility is improper.

Patentee should use document code PET.OP if electronically filing a reply to this dismissal. If the USPTO finds that the request was improperly deemed ineligible, the USPTO will mail applicant a recalculation determination.

Patentee should be aware that in order to preserve the right to review in the United States District Court for the District of Columbia of the USPTO patent term adjustment determination, patentee must ensure that he or she also take the steps required under 35 U.S.C. 154(b)(4)(A). Nothing in the request for recalculation should be construed as providing an alternative time frame for commencing a civil action under 35 U.S.C. 154 (b)(4)(A).

Any questions concerning this decision should be directed to the Office of Patent Legal Administration at 571-272-7702.

UNITED STATES PATENT AND TRADEMARK OFFICE

Commissioner for Patents
United States Patent and Trademark Office
P.O. Box 1450
Alexandria, VA 22313-1450
www.uspto.gov

OBLON, SPIVAK, MCCLELLAND MAIER & NEUSTADT, P.C.
1940 DUKE STREET
ALEXANDRIA VA 22314

**COPY MAILED**

OCT 02 2008

**OFFICE OF PETITIONS**

| | | |
|---|---|---|
| In re Application of | : | |
| Hiromi Yuasa, et al. | : | |
| Application No. 10/954,545 | : | DECISION GRANTING PETITION |
| Filed: October 1, 2004 | : | UNDER 37 CFR 1.313(c)(2) |
| Attorney Docket No. 259703US2 | : | |

This is a decision on the petition under 37 CFR 1.313(c)(2), filed October 1, 2008, to withdraw the above-identified application from issue after payment of the issue fee.

The petition is **GRANTED**.

The above-identified application is withdrawn from issue for consideration of a submission under 37 CFR 1.114 (request for continued examination). *See* 37 CFR 1.313(c)(2).

***Petitioner is advised that the issue fee paid on April 24, 2008 cannot be refunded. If, however, this application is again allowed, petitioner may request that it be applied towards the issue fee required by the new Notice of Allowance.***[1]

Telephone inquiries regarding this decision should be directed to undersigned at (571) 272-1642.

This application is being referred to Technology Center AU 2627 for processing of the request for continued examination under 37 CFR 1.114 and for consideration of the concurrently filed amendment.

/April M. Wise/
April M. Wise
Petition Examiner
Office of Petitions

---

[1] *The request to apply the issue fee to the new Notice may be satisfied by completing and returning the new Part B – Fee(s) Transmittal Form (along with any balance due at the time of submission). Petitioner is advised that the Issue Fee Transmittal Form must be completed and timely submitted to avoid abandonment of the application.*

UNITED STATES PATENT AND TRADEMARK OFFICE

Commissioner for Patents
United States Patent and Trademark Office
P.O. Box 1450
Alexandria, VA 22313-1450
www.uspto.gov

JAN 3 1 2005

| | | |
|---|---|---|
| In re Application of | : | |
| CHOATE et al. | : | |
| Serial Number: 10/954,550 | : | PETITION UNDER |
| Filed: September 29, 2004 | : | M.P.E.P.708.02 V |
| For: PROCESS AND APPARATUS FOR GENERATING USEFUL BIOMASS FROM ORGANIC WASTE STREAMS | : | |

This is in response to the petition filed January 3, 2005, requesting that the above-identified application be granted Special Status under Section 708.02 V of the MPEP and 37 CFR 1.102(c) (**no fee required**).

The request for Special Status considered under Section 708.02 V is granted because the criteria under 37 CFR 1.102(c) have been met.

The petition is **GRANTED.**

Richard Crispino, Special Programs Examiner
Technology Center 1700
Chemical and Materials Engineering

Carr & Ferrell, LLP
2200 Geng Road
Palo Alto, CA 94303

Copied from 10654550 on 03/09/2005

UNITED STATES PATENT AND TRADEMARK OFFICE

UNITED STATES DEPARTMENT OF COMMERCE
United States Patent and Trademark Office
Address: COMMISSIONER FOR PATENTS
P.O. Box 1450
Alexandria, Virginia 22313-1450
www.uspto.gov

HITT GAINES, PC
ALCATEL-LUCENT
PO BOX 832570
RICHARDSON, TX 75083

Mail Date: 04/29/2010

| | | |
|---|---|---|
| **Applicant** | : Joanna Aizenberg | : DECISION ON REQUEST FOR |
| **Patent Number** | : 7608446 | : RECALCULATION of PATENT |
| **Issue Date** | : 10/27/2009 | : TERM ADJUSTMENT IN VIEW |
| **Application No** | : 10/954,552 | : OF WYETH AND NOTICE OF INTENT TO |
| **Filed** | : 09/30/2004 | : ISSUE CERTIFICATE OF CORRECTION |
| | | : |

The Request for Recalculation is **GRANTED** to the extent indicated.

The patent term adjustment has been determined to be **657** days. The USPTO will *sua sponte* issue a certificate of correction reflecting the amount of PTA days determined by the recalculation.

Prior to the issuance of the certificate of correction, the USPTO will afford patentee an opportunity to be heard and request reconsideration. Accordingly, patentee has **one month or thirty (30) days**, whichever is longer, to file a request for reconsideration of this patent term adjustment calculation. See 35 U.S.C. 154(b)(3)(B)(ii) and 37 CFR 1.322(a)(4). No extensions of time will be granted under 37 CFR 1.136.

Patentee should use document code PET.OP if electronically filing a request for reconsideration of this patent term adjustment calculation. The patentee must also include the information required by 37 CFR 1.705(b)(2) and the fee required by 37 CFR 1.18(e). If patentee does not file a timely request for reconsideration of this patent term adjustment calculation including the information required by 37 CFR 1.705(b)(2) and the fee required by 37 CFR 1.18(e), the USPTO will issue a certificate of correction reflecting the PTA determination noted above.

Patentee should be aware that in order to preserve the right to review in the United States District Court for the District of Columbia of the USPTO patent term adjustment determination, patentee must ensure that he or she also take the steps required under 35 U.S.C. 154(b)(4)(A) in a timely manner. Nothing in the request for recalculation should be construed as providing an alternative time frame for commencing a civil action under 35 U.S.C. 154(b)(4)(A).

Any questions concerning this decision should be directed to the Office of Patent Legal Administration at 571-272-7702.

UNITED STATES PATENT AND TRADEMARK OFFICE

UNITED STATES DEPARTMENT OF COMMERCE
United States Patent and Trademark Office
Address: COMMISSIONER FOR PATENTS
P.O. Box 1450
Alexandria, Virginia 22313-1450
www.uspto.gov

Carmen Patti Law Group, LLC
One N. LaSalle Street
44th Floor
Chicago, IL 60602

Mail Date: 05/26/2010

| | | |
|---|---|---|
| **Applicant** | : Ramachendra P. Batni | : DECISION ON REQUEST FOR |
| **Patent Number** | : 7630313 | : RECALCULATION of PATENT |
| **Issue Date** | : 12/08/2009 | : TERM ADJUSTMENT IN VIEW |
| **Application No** | : 10/954,573 | : OF WYETH AND NOTICE OF INTENT TO |
| **Filed** | : 09/30/2004 | : ISSUE CERTIFICATE OF CORRECTION |
| | | : |

The Request for Recalculation is **GRANTED** to the extent indicated.

The patent term adjustment has been determined to be **1091** days. The USPTO will *sua sponte* issue a certificate of correction reflecting the amount of PTA days determined by the recalculation.

Prior to the issuance of the certificate of correction, the USPTO will afford patentee an opportunity to be heard and request reconsideration. Accordingly, patentee has **one month or thirty (30) days**, whichever is longer, to file a request for reconsideration of this patent term adjustment calculation. See 35 U.S.C. 154(b)(3)(B)(ii) and 37 CFR 1.322(a)(4). No extensions of time will be granted under 37 CFR 1.136.

Patentee should use document code PET.OP if electronically filing a request for reconsideration of this patent term adjustment calculation. The patentee must also include the information required by 37 CFR 1.705(b)(2) and the fee required by 37 CFR 1.18(e). If patentee does not file a timely request for reconsideration of this patent term adjustment calculation including the information required by 37 CFR 1.705(b)(2) and the fee required by 37 CFR 1.18(e), the USPTO will issue a certificate of correction reflecting the PTA determination noted above.

Patentee should be aware that in order to preserve the right to review in the United States District Court for the District of Columbia of the USPTO patent term adjustment determination, patentee must ensure that he or she also take the steps required under 35 U.S.C. 154(b)(4)(A) in a timely manner. Nothing in the request for recalculation should be construed as providing an alternative time frame for commencing a civil action under 35 U.S.C. 154(b)(4)(A).

Any questions concerning this decision should be directed to the Office of Patent Legal Administration at 571-272-7702.

UNITED STATES PATENT AND TRADEMARK OFFICE

UNITED STATES DEPARTMENT OF COMMERCE
United States Patent and Trademark Office
Address: COMMISSIONER FOR PATENTS
P.O. Box 1450
Alexandria, Virginia 22313-1450
www.uspto.gov

The Law Offices of John C. Scott, LLC
c/o PortfolioIP
P.O. Box 52050
Minneapolis, MN 55402

Mail Date: 04/21/2010

| | | |
|---|---|---|
| **Applicant** | : John S. Sadowsky | : DECISION ON REQUEST FOR |
| **Patent Number** | : 7609780 | : RECALCULATION of PATENT |
| **Issue Date** | : 10/27/2009 | : TERM ADJUSTMENT IN VIEW |
| **Appliction No** | : 10/954,582 | : OF WYETH AND NOTICE OF INTENT TO |
| **Filed** | : 09/30/2004 | : ISSUE CERTIFICATE OF CORRECTION |
| | | : |

The Request for Recalculation is **GRANTED** to the extent indicated.

The patent term adjustment has been determined to be **1320** days. The USPTO will *sua sponte* issue a certificate of correction reflecting the amount of PTA days determined by the recalculation.

Prior to the issuance of the certificate of correction, the USPTO will afford patentee an opportunity to be heard and request reconsideration. Accordingly, patentee has **one month or thirty (30) days**, whichever is longer, to file a request for reconsideration of this patent term adjustment calculation. See 35 U.S.C. 154(b)(3)(B)(ii) and 37 CFR 1.322(a)(4). No extensions of time will be granted under 37 CFR 1.136.

Patentee should use document code PET.OP if electronically filing a request for reconsideration of this patent term adjustment calculation. The patentee must also include the information required by 37 CFR 1.705(b)(2) and the fee required by 37 CFR 1.18(e). If patentee does not file a timely request for reconsideration of this patent term adjustment calculation including the information required by 37 CFR 1.705(b)(2) and the fee required by 37 CFR 1.18(e), the USPTO will issue a certificate of correction reflecting the PTA determination noted above.

Patentee should be aware that in order to preserve the right to review in the United States District Court for the District of Columbia of the USPTO patent term adjustment determination, patentee must ensure that he or she also take the steps required under 35 U.S.C. 154(b)(4)(A) in a timely manner. Nothing in the request for recalculation should be construed as providing an alternative time frame for commencing a civil action under 35 U.S.C. 154(b)(4)(A).

Any questions concerning this decision should be directed to the Office of Patent Legal Administration at 571-272-7702.

UNITED STATES PATENT AND TRADEMARK OFFICE

Commissioner for Patents
United States Patent and Trademark Office
P.O. Box 1450
Alexandria, VA 22313-1450
www.uspto.gov

MARGER JOHNSON & MCCOLLOM, P.C.
210 SW MORRISON STREET, SUITE 400
PORTLAND, OR 97204

COPY MAILED
DEC 29 2009
OFFICE OF PETITIONS

In re Application of :
David Johnstone McCutchen :
Application No. 10/954,585 : DECISION ON PETITION
Filed: September 29, 2004 :
Attorney Docket No. 3370-0025 :

This is a decision on the petition under the unintentional provisions of 37 CFR 1.137(b), filed October 20, 2009, to revive the above-identified application.

The petition is **GRANTED**.

The application became abandoned for failure to reply in a timely manner to the Restriction Requirement, mailed July 18, 2007 , which set a shortened statutory period for reply of one (1) month or thirty (30) days (whichever is later). No extensions of time under the provisions of 37 CFR 1.136(a) were obtained. Accordingly, the application became abandoned on August 18, 2007.

The petition satisfies the requirements of 37 CFR 1.137(b) in that petitioner has supplied (1) the reply in the form of an election with an amendment, (2) the petition fee of $810, and (3) a proper statement of unintentional delay.

Telephone inquiries concerning this decision should be directed to undersigned at (571) 272-1642. All other inquiries concerning the examination or status of this application should be directed to the Technology Center.

This application is being referred to Technology Center AU 2621 for appropriate action by the Examiner in the normal course of business on the reply received October 20, 2009.

April M. Wise
Petitions Examiner
Office of Petitions

UNITED STATES PATENT AND TRADEMARK OFFICE

UNITED STATES DEPARTMENT OF COMMERCE
United States Patent and Trademark Office
Address: COMMISSIONER FOR PATENTS
P.O. Box 1450
Alexandria, Virginia 22313-1450
www.uspto.gov

Michael Best & Friedrich LLP
100 East Wisconsin Avenue
Suite 3300
Milwaukee, WI 53202

Mail Date: 04/21/2010

| | | |
|---|---|---|
| **Applicant** | : Michael Dearing | : DECISION ON REQUEST FOR |
| **Patent Number** | : 7661591 | : RECALCULATION of PATENT |
| **Issue Date** | : 02/16/2010 | : TERM ADJUSTMENT IN VIEW |
| **Appliction No** | : 10/954,612 | : OF WYETH AND NOTICE OF INTENT TO |
| **Filed** | : 10/01/2004 | : ISSUE CERTIFICATE OF CORRECTION |
| | | : |

The Request for Recalculation is **GRANTED** to the extent indicated.

The patent term adjustment has been determined to be **0** days. The USPTO will *sua sponte* issue a certificate of correction reflecting the amount of PTA days determined by the recalculation.

Prior to the issuance of the certificate of correction, the USPTO will afford patentee an opportunity to be heard and request reconsideration. Accordingly, patentee has **one month or thirty (30) days**, whichever is longer, to file a request for reconsideration of this patent term adjustment calculation. See 35 U.S.C. 154(b)(3)(B)(ii) and 37 CFR 1.322(a)(4). No extensions of time will be granted under 37 CFR 1.136.

Patentee should use document code PET.OP if electronically filing a request for reconsideration of this patent term adjustment calculation. The patentee must also include the information required by 37 CFR 1.705(b)(2) and the fee required by 37 CFR 1.18(e). If patentee does not file a timely request for reconsideration of this patent term adjustment calculation including the information required by 37 CFR 1.705(b)(2) and the fee required by 37 CFR 1.18(e), the USPTO will issue a certificate of correction reflecting the PTA determination noted above.

Patentee should be aware that in order to preserve the right to review in the United States District Court for the District of Columbia of the USPTO patent term adjustment determination, patentee must ensure that he or she also take the steps required under 35 U.S.C. 154(b)(4)(A) in a timely manner. Nothing in the request for recalculation should be construed as providing an alternative time frame for commencing a civil action under 35 U.S.C. 154(b)(4)(A).

Any questions concerning this decision should be directed to the Office of Patent Legal Administration at 571-272-7702.

UNITED STATES PATENT AND TRADEMARK OFFICE

UNITED STATES DEPARTMENT OF COMMERCE
United States Patent and Trademark Office
Address: COMMISSIONER FOR PATENTS
P.O. Box 1450
Alexandria, Virginia 22313-1450
www.uspto.gov

SCHWEGMAN, LUNDBERG & WOESSNER, P.A.
P.O. BOX 2938
MINNEAPOLIS, MN 55402

Mail Date: 04/20/2010

| | | |
|---|---|---|
| **Applicant** | : Michael D. Kinney | : DECISION ON REQUEST FOR |
| **Patent Number** | : 7571090 | : RECALCULATION of PATENT |
| **Issue Date** | : 08/04/2009 | : TERM ADJUSTMENT IN VIEW |
| **Appliction No** | : 10/954,622 | : OF WYETH AND NOTICE OF INTENT TO |
| **Filed** | : 09/30/2004 | : ISSUE CERTIFICATE OF CORRECTION |
| | | : |

The Request for Recalculation is **GRANTED** to the extent indicated.

The patent term adjustment has been determined to be **1221** days. The USPTO will *sua sponte* issue a certificate of correction reflecting the amount of PTA days determined by the recalculation.

Prior to the issuance of the certificate of correction, the USPTO will afford patentee an opportunity to be heard and request reconsideration. Accordingly, patentee has **one month or thirty (30) days**, whichever is longer, to file a request for reconsideration of this patent term adjustment calculation. See 35 U.S.C. 154(b)(3)(B)(ii) and 37 CFR 1.322(a)(4). No extensions of time will be granted under 37 CFR 1.136.

Patentee should use document code PET.OP if electronically filing a request for reconsideration of this patent term adjustment calculation. The patentee must also include the information required by 37 CFR 1.705(b)(2) and the fee required by 37 CFR 1.18(e). If patentee does not file a timely request for reconsideration of this patent term adjustment calculation including the information required by 37 CFR 1.705(b)(2) and the fee required by 37 CFR 1.18(e), the USPTO will issue a certificate of correction reflecting the PTA determination noted above.

Patentee should be aware that in order to preserve the right to review in the United States District Court for the District of Columbia of the USPTO patent term adjustment determination, patentee must ensure that he or she also take the steps required under 35 U.S.C. 154(b)(4)(A) in a timely manner. Nothing in the request for recalculation should be construed as providing an alternative time frame for commencing a civil action under 35 U.S.C. 154(b)(4)(A).

Any questions concerning this decision should be directed to the Office of Patent Legal Administration at 571-272-7702.

UNITED STATES PATENT AND TRADEMARK OFFICE

Commissioner for Patents
United States Patent and Trademark Office
P.O. Box 1450
Alexandria, VA 22313-1450
www.uspto.gov

Lisa K. Jorgenson, Esq.
STMicroelectronics, Inc.
1310 Electronics Drive
Carrollton TX 75006

**COPY MAILED**

JUN 29 2005

**OFFICE OF PETITIONS**

| | |
|---|---|
| In re Application of | : |
| Chiu and Tee | : |
| Application No. 10/954,630 | : DECISION REFUSING STATUS |
| Filed: September 30, 2004 | : UNDER 37 CFR 1.47(a) |
| Attorney Docket No. 03-C-129 | : |
| (STMI01-03129) | : |

This is in response to the petition under 37 CFR 1.47(a), filed April 20, 2005 (certificate of mailing dated April 15, 2005). Applicants obtained an extension of time for response within the third month. Accordingly, the petition is filed timely.

The petition is **dismissed**.

Applicants are given TWO (2) MONTHS from the mailing date of this decision to reply, correcting the below-noted deficiencies. Any reply should be entitled "Request for Reconsideration of Petition Under 37 CFR 1.47(a)," and should address the deficiencies noted below, except that the reply may include an oath or declaration executed by the non-signing inventor. Failure to respond will result in abandonment of the application. Any extensions of time will be governed by 37 CFR 1.136(a).

On September 30, 2004, applicants filed the above-identified application without an executed oath or declaration and the statutory basic filing fee. On November 15, 2004, the Office mailed a "Notice to File Missing Parts of Application," requiring an executed oath or declaration, the $790.00 statutory basic filing fee, the $130.00 surcharge for their late filing, and additional claims fee.

In the petition, applicants' counsel stated that on December 30, 2004, an email was sent to Tong Yan Tee, the non-signing inventor, which included the specification and a Declaration and Power of Attorney. As of the date of the filing of the petition, applicants' counsel has not received an executed Declaration from Mr. Tee.

A grantable petition under 37 CFR 1.47(a) requires: (1) proof that the non-signing inventor cannot be reached or refuses to sign the oath or declaration after having been presented with the application papers (specification, claims and drawings); (2) an acceptable oath or declaration in compliance with 35 U.S.C. §§ 115 and 116; (3) the petition fee; and (4) a statement of the last known address of the non-signing inventor. Applicants lacks item (1) as set forth above.

As to item (1), applicants have not provided sufficient proof that the non-signing inventor was sent or presented with a complete copy of the application as filed (specification, including the claims, drawings, if any, and the declaration). See MPEP 409.03(d).

The Office notes that applicants' counsel stated that a copy of the specification and a Declaration and Power of Attorney were sent via email to Mr. Tee. However, applicants have not submitted sufficient proof that Mr. Tee received the email message containing the application papers. Moreover, applicants did not provide any evidence that the email address was a current address, which was monitored regularly by Mr. Tee.

Accordingly, in any renewed petition, applicants must show that the non-signing inventor was presented with the application papers (specification, including the claims, drawings, if any, and the declaration) for the present application. In this case, as the applicants are aware of Mr. Tee's last known address, it is suggested that applicants mail a copy of the application papers to that address.

Applicants may show that a copy of the application was sent or given to the non-signing inventor for review by providing a copy of the cover letter transmitting the application papers (specification, including claims, drawings, if any, and the declaration) to the non-signing inventor or details given in an affidavit or declaration of facts by a person having first-hand knowledge of the details.

If the application is returned as undeliverable, applicants should present a copy of the envelope, showing that the application sent to the last known address of the non-signing inventor was returned as undeliverable.

Likewise, if the non-signing inventor refuses to execute the declaration in writing, applicants must submit a copy of that written refusal with any renewed petition. If the refusal was made orally to a person, then that person must provide details of the refusal in an affidavit or declaration of fact.

Further correspondence with respect to this matter should be addressed as follows and **to the attention of Christina Tartera Donnell, Senior Petitions Attorney:**

By mail: Mail Stop Petition
Commissioner for Patents
P.O. Box 1450
Alexandria, VA 22313-1450

By FAX: (703) 872-9306
Attn: Office of Petitions

By hand: Customer Service Window
Randolph Building
401 Dulany Street
Alexandria, VA 22314

Telephone inquiries related to this decision may be directed to the undersigned at (571) 272-3211.

Christina Tartera Donnell

Christina Tartera Donnell
Senior Petitions Attorney
Office of Petitions

UNITED STATES PATENT AND TRADEMARK OFFICE

Commissioner for Patents
United States Patent and Trademark Office
P.O. Box 1450
Alexandria, VA 22313-1450
www.uspto.gov

Lisa K. Jorgenson, Esq.
STMicroelectronics, Inc.
1310 Electronics Drive
Carrollton TX 75006

**COPY MAILED**

SEP 12 2005

**OFFICE OF PETITIONS**

| | |
|---|---|
| In re Application of | : |
| Chiu and Tee | : DECISION NOTING JOINDER AND |
| Application No. 10/954,630 | : PETITION UNDER 37 CFR 1.47(a) |
| Filed: September 30, 2004 | : AS MOOT |
| Attorney Docket No. 03-C-129 | : |
| (STMI01-03129) | : |

This is in response to the renewed petition under 37 CFR 1.47(a), filed on September 1, 2005 (certificate of mailing date August 29, 2005).

In view of the joinder of the inventors, further consideration under 37 CFR 1.47(a) is not necessary. Accordingly, the petition is dismissed as involving a moot issue. This application does not have any Rule 1.47(a) status and no such status should appear on the file wrapper. This application does not need to be returned to the Office of Petitions for further consideration under 37 CFR 1.47(a).

This matter is being referred to Technology Center Art Unit 2818.

Telephone inquiries should be directed to the undersigned at (571) 272-3211.

Christina T. Donnell

Christina Tartera Donnell
Senior Petitions Attorney
Office of Petitions

UNITED STATES PATENT AND TRADEMARK OFFICE

Commissioner for Patents
United States Patent and Trademark Office
P.O. Box 1450
Alexandria, VA 22313-1450
www.uspto.gov

**SNELL & WILMER**
**ONE ARIZONA CENTER**
**400 EAST VAN BUREN**
**PHOENIX AZ 85004-0001**

**COPY MAILED**

OCT 0 6 2005

**OFFICE OF PETITIONS**

| | | |
|---|---|---|
| In re Application of | : | |
| Matsuda et al. | : | |
| Application No. 10/954,639 | : | ON PETITION |
| Filed: September 30, 2004 | : | |
| Attorney Docket No. 49288.0817 | : | |

This is a decision on the petition under 37 C.F.R. § 1.137(b), filed September 6, 2005, to revive the above-identified application.

The petition is **GRANTED.**

The above-identified application became abandoned for failure to reply in a timely manner to the Notice to File Missing Parts of Application (Notice) mailed November 15, 2004. The Notice set a period for reply of two (2) months from the mail date of the Notice. No extensions of time under the provisions of 37 CFR 1.136(a) were obtained. Accordingly, the above-identified application became abandoned on January 16, 2005.

The petition satisfies the conditions for revival pursuant to the provisions of 37 CFR 1.137(b) in that (1) the reply in the form of the oath/declaration and requisite fees; (2) the petition fee; and (3) the required statement of unintentional delay have been received. Accordingly, the reply has been accepted as having been unintentionally delayed.

This matter is being referred to the Office of Initial Patent Examination for further processing.

Telephone inquiries regarding this decision should be directed to the undersigned at (571) 272-3282.

Liana Chase
Petitions Examiner
Office of Petitions

UNITED STATES PATENT AND TRADEMARK OFFICE

Commissioner for Patents
United States Patent and Trademark Office
P.O. Box 1450
Alexandria, VA 22313-1450
www.uspto.gov

BRINKS HOFER GILSON & LIONE
P.O. BOX 10395
CHICAGO, IL 60610

COPY MAILED
SEP 29 2006
OFFICE OF PETITIONS

| | | |
|---|---|---|
| In re Application of | : | |
| Matsuda, et al. | : | |
| Application No. 10/954,639 | : | DECISION ON PETITION |
| Filed: September 30, 2004 | : | TO WITHDRAW |
| Attorney Docket No. 12289/4 | : | FROM RECORD |
| | : | |

This is a decision on the Request to Withdraw as attorney or agent of record under 37 C.F.R. § 1.36(b), filed December 14, 2004.

The request is **DISMISSED** as moot.

A review of the file record indicates that the power of attorney to Brinks, Hofer Gilson & Lione has been revoked by the assignee of the patent application on May 25, 2006. Accordingly, the request to withdraw under 37 C.F.R. § 1.36(b) is moot.

All future communications from the Office will continue to be directed to the below-listed address until otherwise notified by applicant.

Telephone inquires concerning this decision should be directed to April Wise at 571-272-1642.

April M. Wise
Petitions Examiner
Office of Petitions

cc: CHARLES F. HAUFF, JR.
SNELL & WILMER
400 EAST VAN BUREN
ONE ARIZONA CENTER
PHOENIX AZ 85004-2202

UNITED STATES PATENT AND TRADEMARK OFFICE

Commissioner for Patents
United States Patent and Trademark Office
P.O. Box 1450
Alexandria, VA 22313-1450
www.uspto.gov

MAIL

JAN 29 2009

DIRECTOR'S OFFICE
TECHNOLOGY CENTER 2600

Lisa K. Jorgenson, Esq.
STMicroelectronics, Inc.
1310 Electronics Drive
Carrollton TX 75006

In re Application of
CHU, LIWEN et al
Application No. 10/954,660
Filed: September 30, 2004
For: **METHOD AND SYSTEM FOR PROVIDING A PRIORITY-BASED, LOW-COLLISION DISTRIBUTED COORDINATION FUNCTION USING A SUPER-FRAME STRUCTURE**

ACCEPTANCE
OF PAPERS

This is a decision responsive to the petition filed August 22, 2008 requesting consideration of the amendment and response to final office action originally filed on May 19, 2008. This decision is also responsive to the copy of the amendment and response to final office action filed with the instant petition on August 22, 2008.

Petitioner asserts that an amendment and response to final office action was received by the US PTO on May 19, 2008. Applicant has also provided a copy of a certificate of mailing by facsimile and a statement in support of the previous facsimile transmission as evidencing receipt of these items by the US PTO on May 19, 2008.

A review of the file does not find the original submission. However, 37 C.F.R. § 1.8(b) states,

> *(b) In the event that correspondence is considered timely filed by being mailed or transmitted in accordance with paragraph (a) of this section, but not received in the U.S. Patent and Trademark Office after a reasonable amount of time has elapsed from the time of mailing or transmitting of the correspondence, or after the application is held to be abandoned, or after the proceeding is dismissed, terminated, or decided with prejudice, the correspondence will be considered timely if the party who forwarded such correspondence:*
> *(1) Informs the Office of the previous mailing or transmission of the correspondence promptly after becoming aware that the Office has no evidence of receipt of the correspondence;*
> *(2) Supplies an additional copy of the previously mailed or transmitted correspondence and certificate; and*
> *(3) Includes a statement which attests on a personal knowledge basis or to the satisfaction of the Director to the previous timely mailing or transmission. If the correspondence was sent by facsimile transmission, a copy of the sending unit 's report confirming transmission may be used to support this statement.<*

Accordingly, it is concluded that the response was timely filed in the Patent and Trademark Office but not scanned into the application image file. Therefore, it is presumed that the original submission was received by the Office, but lost. The Office sincerely apologizes for any inconvenience to applicant.

The petition to accord filing date of amendment and response to final office action is **GRANTED**.

The May 19, 2008 copy of the originally filed amendment and response to final office action is **ACCEPTED.** Accordingly, the August 22, 2008 resubmission of the amendment and response to final office action will be considered.

A further review of the file record shows an RCE was filed and entered at the same time of the petition on August 22, 2008. A non final office action in response to the RCE was mailed on 10/17/2008 and an amendment in response to the non final office action was received on January 21, 2009.

The application file is being forwarded to the Technical Support Staff for entry of the amendment filed January 21, 2009 and will then be forwarded to the Examiner for appropriate consideration in due course.

Michael Hrabik
Quality Assurance Specialist
Technology Center 2600
Communications

UNITED STATES PATENT AND TRADEMARK OFFICE

Commissioner for Patents
United States Patent and Trademark Office
P.O. Box 1450
Alexandria, VA 22313-1450
www.uspto.gov

STEPHEN C. KAUFMAN
IBM CORPORATION
INTELLECTUAL PROPERTY LAW DEPT.
PO BOX 218
YORKTOWN HEIGHTS, NY 10598

**COPY MAILED**

SEP 11 2009

**OFFICE OF PETITIONS**

| | | |
|---|---|---|
| In re Application of | : | |
| Rachel Gordin, et al. | : | |
| Application No. 10/954,672 | : | DECISION ON PETITION |
| Filed: September 30, 2004 | : | |
| Attorney Docket No. IL92004003US1 | : | |

This is a decision on the petition under the unintentional provisions of 37 CFR 1.137(b), filed July 20, 2009, to revive the above-identified application.

The application became abandoned for failure to reply in a timely manner to the non-final Office action mailed, August 28, 2008, which set a shortened statutory period for reply of one (1) month or thirty (30) days (whichever is later) . No extensions of time under the provisions of 37 CFR 1.136(a) were obtained. Accordingly, the application became abandoned on September 29, 2008.

The petition satisfies the requirements of 37 CFR 1.137(b) in that petitioner has supplied (1) the reply in the form of an amendment, (2) the petition fee of $810, and (3) a proper statement of unintentional delay.

In view of the above, the petition is **GRANTED**.

Telephone inquiries concerning this decision should be directed to undersigned at (571) 272-1642. All other inquiries concerning the examination or status of this application should be directed to the Technology Center.

This application is being referred to Technology Center AU 2161 for appropriate action by the Examiner in the normal course of business on the reply received July 20, 2009.

April M. Wise
Petitions Examiner
Office of Petitions

UNITED STATES PATENT AND TRADEMARK OFFICE

Commissioner for Patents
United States Patent and Trademark Office
P.O. Box 1450
Alexandria, VA 22313-1450
www.uspto.gov

MBHB/TRADING TECHNOLOGIES
300 SOUTH WACKER DRIVE
SUITE 3200
CHICAGO IL 60606

**COPY MAILED**

JUN 2 2 2009

**OFFICE OF PETITIONS**

| | |
|---|---|
| In re Application | : |
| Michael J. Burns et al. | : |
| Application No. 10/954,681 | : DECISION ON APPLICATION |
| Filed: September 30, 2004 | : FOR PATENT TERM ADJUSTMENT |
| Attorney Docket No. **02-348-B** | : |

This is in response to the "REQUEST FOR RECONSIDERATION OF PATENT TERM ADJUSTMENT UNDER 37 C.F.R. 1.705 (b)-(d)" filed May 29, 2009. Applicant requests that the determination of patent term adjustment be corrected from six hundred thirty-eight (638) days to one thousand eight (1008) days. Applicant requests this correction on the basis that the Office will take in excess of three years to issue this patent and in light of the recent court decision in Wyeth v. Dudas, No. 07-1492 (D.D.C. September 30, 2008).

As the instant application for patent term adjustment requests reconsideration of the patent term adjustment as it relates to the Office's failure to issue the patent within 3 years of the filing date, a decision is being **held in abeyance** until after the actual patent date. Knowledge of the actual date the patent issues is required to calculate the amount, if any, of additional patent term patentee is entitled to for Office failure to issue the patent within 3 years. See § 1.703(b).

Applicant is given TWO (2) MONTHS from the issue date of the patent to file a written request for reconsideration of the patent term adjustment for Office failure to issue the patent within 3 years. A copy of this decision should accompany the request. Applicant may seek such consideration without payment of an additional fee. However, as to all other bases for seeking reconsideration of the patent term adjustment indicated in the patent, all requirements of § 1.705(d) must be met. Requests for reconsideration on other bases must be timely filed and must include payment of the required fee.

Rather than file the request for reconsideration of Patent Term Adjustment at the time of the mailing of the notice of allowance, applicant is advised that they may wait until the time of the issuance of the patent and file a request for reconsideration of the patent term pursuant to 37 CFR 1.705(d). The USPTO notes that it does not calculate the

amount of time earned pursuant to 37 CFR 1.702(b) until the time of the issuance of the patent and accordingly, the Office will consider any request for reconsideration of the patent term adjustment due to an error in the calculation of 37 CFR 1.702(b) to be timely if the request for reconsideration is filed within two months of the issuance of the patent.

The Office acknowledges submission of the $200.00 fee set forth in 37 CFR 1.18(e). No additional fees are required.

The application is being forwarded to the Office of Data Management for issuance of the patent. The patent term adjustment indicated on the patent (as shown on the Issue Notification mailed about three weeks prior to patent issuance) will include any additional adjustment accrued both for Office delay in issuing the patent more than four months after payment of the issue fee and satisfaction of all outstanding requirements, and for the Office taking in excess of three years to issue the patent (to the extent that the three-year period does not overlap with periods already accorded).

Telephone inquiries specific to this decision should be directed to Senior Petitions Attorney Patricia Faison-Ball at (571) 272-3212.

Kery A. Fries
Senior Legal Advisor
Office of Patent Legal Administration
Office of Deputy Commissioner
for Examination Policy

UNITED STATES PATENT AND TRADEMARK OFFICE

Commissioner for Patents
United States Patent and Trademark Office
P.O. Box 1450
Alexandria, VA 22313-1450
www.uspto.gov

**MBHB/TRADING TECHNOLOGIES**
**300 SOUTH WACKER DRIVE**
**SUITE 3200**
**CHICAGO IL 60606**

**COPY MAILED**

DEC **03** 2009

**OFFICE OF PETITIONS**

| | | |
|---|---|---|
| In re Patent No. 7,571,134 | : | |
| Issue Date: August 4, 2009 | : | |
| Application No. 10/954,681 | : | DECISION GRANTING PETITION |
| Filed: September 30, 2004 | : | UNDER 37 CFR 1.137(b) |
| Attorney Docket No. 02-348-B | : | |

This is a decision on the petition, filed October 1, 2009, which is being treated as a petition under 37 CFR 1.137(b) to accept an unintentionally delayed notification to the U.S. Patent and Trademark Office (USPTO) of the filing of an application in a foreign country or under a multinational treaty that requires publication of applications eighteen-months after filing. *See* 37 CFR 1.137(f).

The petition under 37 CFR 1.137(b) is **GRANTED**.

Petitioner states that the instant nonprovisional application is the subject of an application filed in an eighteen-month publication country on September 22, 2005. However, the USPTO was unintentionally not notified of this filing within 45 days subsequent to the filing of the subject application in an eighteen-month publication country. Therefore, pursuant to the provisions of 35 U.S.C. § 122(b)(2)(B)(iii) and 37 CFR 1.213(c), petitioner failed to timely notify the USPTO of the filing of a counterpart application in a foreign country or under a multilateral international agreement that requires publication of applications 18 months after filing.

A petition under 37 CFR 1.137(b) to accept an unintentionally delayed notification to the USPTO of the filing of a counterpart application in an eighteen-month publication country must be accompanied by:

(1) the required reply which is met by the notification of such filing in a foreign country or under a multinational treaty;
(2) the petition fee as set forth in 37 CFR 1.17(m); and
(3) a statement that the entire delay in filing the required reply from the due date of the reply until the filing of a grantable petition was unintentional.

The instant petition has been found to be in compliance with 37 CFR 1.137(b). Accordingly, the failure to timely notify the USPTO of a foreign or international filing within 45 days as provided by 35 U.S.C. § 122(b)(2)(B)(iii) is accepted as having been unintentionally delayed.

This application matured into Patent No. 7,571,134 on August 4, 2009. Therefore, no further action is required.

Telephone inquiries concerning this decision should be directed to Joan Olszewski at (571) 272-7751.

/Liana Walsh/
Liana Walsh
Petitions Examiner
Office of Petitions

UNITED STATES PATENT AND TRADEMARK OFFICE

Commissioner for Patents
United States Patent and Trademark Office
P.O. Box 1450
Alexandria, VA 22313-1450
www.uspto.gov

COPY MAILED

DEC 04 2009

OFFICE OF PETITIONS

MBHB/TRADING TECHNOLOGIES
300 SOUTH WACKER DRIVE
SUITE 3200
CHICAGO IL 60606

| | |
|---|---|
| In re Patent No. 7,571,134 | : |
| Issued: August 4, 2009 | : DECISION ON REQUEST |
| Application No. 10/954,681 | : FOR RECONSIDERATION OF |
| Filed: September 30, 2004 | : PATENT TERM ADJUSTMENT |
| Attorney Docket No. 02-348-B | : |

This is a decision on the "REQUEST FOR RECONSIDERATION OF PATENT TERM ADJUSTMENT UNDER 37 C.F.R. 1.705 (b)-(d)" filed August 18, 2009, requesting that the patent term adjustment determination for the above-identified patent be changed from 630 days to 1001 days.

The request for reconsideration of patent term adjustment is **DISMISSED**.

On August 4, 2009, the above-identified application matured into US Patent No. 7,571,134 with a patent term adjustment of 630 days. This request for reconsideration of patent term adjustment was timely filed within two months of the issue date of the patent. See 37 CFR 1.705(d).

The Office acknowledges submission of the $200.00 fee set forth in 37 CFR 1.18(e). No additional fees are required.

Patentees request recalculation of the patent term adjustment based on the decision in Wyeth v. Dudas, 580 F. Supp. 2d 138, 88 U.S.P.Q. 2d 1538 (D.D.C. 2008). Patentees assert that in view of the decision in Wyeth, they are entitled to a total patent term adjustment of 1001 days, which includes 429 days due to exceeding three year pendency.

Patentees do not dispute that the total period of Office delay is the sum of the period of Three Years Delay and the period of Examination Delay to the extent that these periods of delay are not overlapping. However, in effect, patentees contend that 59 days of the Three Year Delay period overlaps with the examination delay. Accordingly, patentees submit that the total period of adjustment for Office delay is 1157 days, which includes the period of Three Year Delay (429 days) and the period of Examination Delay (728

days), reduced by the period of overlap (59 days). As such, patentees assert entitlement to a patent term adjustment of 1001 days (429 + 728 reduced by 59 overlap – 7 (applicant delay)).

At the outset, patentees argue that the period from May 29, 2009 (the filing of an amendment after allowance) to June 5, 2009 (the mailing of a response to the Rule 312 amendment) is 7 days and not 8 days and thus the calculation of applicant delay is incorrect. Patentees are advised that because the calculation for a delay pursuant to 37 CFR 1.704 ( c) (10) begins on the day the paper was filed or in this case May 29, 2009, for purposes of calculations, the calculation period begins on May 29, 2009 and ends on June 5, 2009. In view therefore, the period of applicant delay has been properly calculated as 8 days, not 7.

The Office contends that all 428[1] days for over three year pendency overlap with the 728 days accorded for Office delay during the pendency of the application, and thus, no additional days were entered for over three year delay. Patentees' calculation of the period of overlap is inconsistent with the Office's interpretation of this provision. 35 U.S.C. 154(b)(2)(A) limits the adjustment of patent term, as follows:

> to the extent that the periods of delay attributable to grounds specified in paragraph (1) overlap, the period of any adjustment granted under this subsection shall not exceed the actual number of days the issuance of the patent was delayed.

Likewise, 35 CFR 1.703(f) provides that:

> To the extent that periods of delay attributable to the grounds specified in § 1.702 overlap, the period of adjustment granted under this section shall not exceed the actual number of days the issuance of the patent was delayed.

As explained in *Explanation of 37 CFR 1.703(f) and of the United States Patent and Trademark Office Interpretation of 35 U.S.C. 154(b)(2)(A)*, 69 Fed. Reg. 34283 (June 21, 2004), the Office interprets 35 U.S.C. 154(b)(2)(A) as permitting either patent term adjustment under 35 U.S.C. 154(b)(1)(A)(i)-(iv), or patent term adjustment under 35 U.S.C. 154(b)(1)(B), but not as permitting patent term adjustment under both 35 U.S.C. 154(b)(1)(A)(i)-(iv) and 154(b)(1)(B). Accordingly, the Office implements the overlap provision as follows:

---

[1]Three year pendency backs out all of the RCE time so three year provison would stop on December 1, 2008, the day before the filing of the RCE.

> If an application is entitled to an adjustment under 35 U.S.C. 154(b)(1)(B), the entire period during which the application was pending (except for periods excluded under 35 U.S.C. 154(b)(1)(B)(i)-(iii)), and not just the period beginning three years after the actual filing date of the application, is the period of delay under 35 U.S.C. 154(b)(1)(B) in determining whether periods of delay overlap under 35 U.S.C. 154(b)(2)(A). Thus, any days of delay for Office issuance of the patent more than 3 years after the filing date of the application, which overlap with the days of patent term adjustment accorded prior to the issuance of the patent will not result in any additional patent term adjustment. See 35 U.S.C. 154(b)(1)(B), 35 U.S.C. 154(b)(2)(A), and 37 CFR § 1.703(f). See *Changes to Implement Patent Term Adjustment Under Twenty Year Term; Final Rule*, 65 Fed. Reg. 56366 (Sept. 18, 2000). See also *Revision of Patent Term Extension and Patent Term Adjustment Provisions; Final Rule*, 69 Fed. Reg. 21704 (April 22, 2004), 1282 Off. Gaz. Pat. Office 100 (May 18, 2004). See also *Explanation of 37 CFR 1.703(f) and of the United States Patent and Trademark Office Interpretation of 35 U.S.C. 154(b)(2)(A),* 69 Fed. Reg. 34283 (June 21, 2004).

As stated in the *Explanation of 37 CFR 1.703(f) and of the United States Patent and Trademark Office Interpretation of 35 U.S.C. 154(b)(2)(A)*, the Office has consistently taken the position that if an application is entitled to an adjustment under the three-year pendency provision of 35 U.S.C. 154(b)(1)(B), the entire period during which the application was pending before the Office (except for periods excluded under 35 U.S.C. 154(b)(1)(B)(i)-(iii)), and not just the period beginning three years after the actual filing date of the application, is the relevant period under 35 U.S.C. 154(b)(1)(B) in determining whether periods of delay "overlap" under 35 U.S.C. 154(b)(2)(A).

This interpretation is consistent with the statute. Taken together the statute and rule provide that to the extent that periods of delay attributable to grounds specified in 35 U.S.C. 154(b)(1) and in corresponding § 1.702 overlap, the period of adjustment granted shall not exceed the actual number of days the issuance of the patent was delayed.

As such, the period for over three-year pendency does not overlap only to the extent that the actual dates in the period beginning three years after the date on which the application was filed overlap with the actual dates in the periods for failure of the Office to take action within specified time frames. In other words, consideration of the overlap does not begin three years after the filing date of the application.

In this instance, the relevant period under 35 U.S.C. 154(b)(1)(B) in determining whether periods of delay "overlap" under 35 U.S.C. 154(b)(2)(A) is the entire period during which the application was pending before the Office, September 30, 2004, to the filing of the first Request for Continued Examination (RCE) on December 2, 2008. (There were no periods excluded under 35 U.S.C. 154(b)(1)(B)(i)-(iii)). Prior to the

issuance of the patent, 728 days of patent term adjustment were accorded for the Office failing to respond within a specified time frame during the pendency of the application. All of the 428 days for Office delay in issuing the patent overlap with the 728 days of Office delay. During that time, the issuance of the patent was delayed by 728 days, not 728 + 428 days. The Office experienced 728 days of examination delay. Otherwise, the Office took all actions set forth in 37 CFR 1.702(a) within the prescribed time frames. Nonetheless, given the 428 days of Office delay and the time allowed within the time frames for processing and examination and the 8 days of applicant delay, as of the date the patent issued, the application was pending three years and 428 days. The Office did not delay 728 days and then an additional 428 days. Accordingly, 728 days of patent term adjustment (not 728 and 428 days) was properly entered. The period of delay of 428 days attributable to the delay in the issuance of the patent overlaps with the adjustment of 728 days attributable to grounds specified in § 1.702(a)(1). Entry of both periods is not warranted. 728 days is determined to be the actual number of days that the issuance of the patent was delayed, considering the 428 days over three years to the issuance of the patent.

Accordingly, at issuance, the Office properly entered 0 additional days of patent term adjustment for the Office taking in excess of three years to issue the patent.

In view thereof, no adjustment to the patent term will be made.

Telephone inquiries specific to this decision should be directed to Senior Petitions Attorney Patricia Faison-Ball at (571) 272-3212.

/Kery A. Fries/

Kery A. Fries
Senior Legal Advisor
Office of Patent Legal Administration
Office of Deputy Commissioner
for Examination Policy

UNITED STATES PATENT AND TRADEMARK OFFICE

UNITED STATES DEPARTMENT OF COMMERCE
United States Patent and Trademark Office
Address: COMMISSIONER FOR PATENTS
P.O. Box 1450
Alexandria, Virginia 22313-1450
www.uspto.gov

MBHB/TRADING TECHNOLOGIES
300 SOUTH WACKER DRIVE
SUITE 3200
CHICAGO, IL 60606

Mail Date: 04/20/2010

| | | |
|---|---|---|
| **Applicant** | : Michael J. Burns | : DECISION ON REQUEST FOR |
| **Patent Number** | : 7571134 | : RECALCULATION of PATENT |
| **Issue Date** | : 08/04/2009 | : TERM ADJUSTMENT IN VIEW |
| **Appliction No** | : 10/954,681 | : OF WYETH AND NOTICE OF INTENT TO |
| **Filed** | : 09/30/2004 | : ISSUE CERTIFICATE OF CORRECTION |
| | | : |

The Request for Recalculation is **GRANTED** to the extent indicated.

The patent term adjustment has been determined to be **939** days. The USPTO will *sua sponte* issue a certificate of correction reflecting the amount of PTA days determined by the recalculation.

Prior to the issuance of the certificate of correction, the USPTO will afford patentee an opportunity to be heard and request reconsideration. Accordingly, patentee has **one month or thirty (30) days**, whichever is longer, to file a request for reconsideration of this patent term adjustment calculation. See 35 U.S.C. 154(b)(3)(B)(ii) and 37 CFR 1.322(a)(4). No extensions of time will be granted under 37 CFR 1.136.

Patentee should use document code PET.OP if electronically filing a request for reconsideration of this patent term adjustment calculation. The patentee must also include the information required by 37 CFR 1.705(b)(2) and the fee required by 37 CFR 1.18(e). If patentee does not file a timely request for reconsideration of this patent term adjustment calculation including the information required by 37 CFR 1.705(b)(2) and the fee required by 37 CFR 1.18(e), the USPTO will issue a certificate of correction reflecting the PTA determination noted above.

Patentee should be aware that in order to preserve the right to review in the United States District Court for the District of Columbia of the USPTO patent term adjustment determination, patentee must ensure that he or she also take the steps required under 35 U.S.C. 154(b)(4)(A) in a timely manner. Nothing in the request for recalculation should be construed as providing an alternative time frame for commencing a civil action under 35 U.S.C. 154(b)(4)(A).

Any questions concerning this decision should be directed to the Office of Patent Legal Administration at 571-272-7702.

UNITED STATES PATENT AND TRADEMARK OFFICE

UNITED STATES DEPARTMENT OF COMMERCE
United States Patent and Trademark Office
Address: COMMISSIONER FOR PATENTS
P.O. Box 1450
Alexandria, Virginia 22313-1450
www.uspto.gov

MBHB/TRADING TECHNOLOGIES
300 SOUTH WACKER DRIVE
SUITE 3200
CHICAGO, IL 60606

Mail Date: 05/17/2010

**Applicant** : Michael J. Burns
**Patent Number** : 7571134
**Issue Date** : 08/04/2009
**Application No** : 10/954,681
**Filed** : 09/30/2004

: NOTICE CONCERNING IMPROPER
: CALCULATION OF PATENT TERM
: ADJUSTMENT BASED UPON USPTO
: IMPROPERLY MEASURING REDUCTION
: PERIOD UNDER 37 CFR 1.704(c)(10).

The United States Patent and Trademark Office (USPTO) discovered that in processing the recent recalculation decisions mailed in response to patentee's filed Request for Recalculation of Patent Term Adjustment in view of Wyeth, the USPTO improperly measured the reduction period for reductions under 37 CFR 1.704(c)(10). Pursuant to 37 CFR 1.704(c)(10), patentee's reduction begins on the date of filing the amendment under 37 CFR 1.312 ("1.312 amendment") or other related paper and ends on the date that the Office mails a response to the filing of the 1.312 amendment or other paper. It has been discovered that during the recalculation, the calculation failed to the limit the reduction to the mail date of the response to the 1.312 amendment or other paper. Accordingly, patentee's reductions were greater than warranted.

This notice **VACATES** the previous GRANTED request for recalculation and provides patentee with a revised GRANTED recalculation.

The patent term adjustment has been determined to be **999** days. The USPTO will *sua sponte* issue a certificate of correction reflecting the amount of patent term adjustment (PTA) days determined by the recalculation.

Prior to the issuance of the certificate of correction, the USPTO will afford patentee an opportunity to be heard and request reconsideration. Accordingly, patentee has **one month or thirty (30) days** from the mail date of this notice, whichever is longer, to file a request for reconsideration of this PTA calculation. See 35 U.S.C. § 154(b)(3)(B)(ii) and 37 CFR 1.322(a)(4).

Patentee should use document code PET.OP if electronically filing a request for reconsideration of this PTA calculation. The patentee must also include the information required by 37 CFR 1.705(b)(2), and the fee required by 37 CFR 1.18(e). If patentee does not file a timely request for reconsideration of this PTA calculation, including the information required by 37 CFR 1.705(b)(2) and the fee required by 37 CFR 1.18(e), the USPTO will issue a certificate of correction reflecting the PTA determination noted above.

Patentee should be aware that in order to preserve the right of review of the USPTO's PTA determination in the United States District Court for the District of Columbia, patentee must ensure that the steps required under 35 U.S.C. § 154 (b)(4) are taken in a timely manner. Nothing in the request for recalculation should be construed as providing an alternative time frame for commencing a civil action under 35 U.S.C. § 154(b)(4).

UNITED STATES PATENT AND TRADEMARK OFFICE

Commissioner for Patents
United States Patent and Trademark Office
P.O. Box 1450
Alexandria, VA 22313-1450
www.uspto.gov

Paper No.

MBHB/TRADING TECHNOLOGIES
300 SOUTH WACKER DRIVE
SUITE 3200
CHICAGO IL 60606

MAILED

MAR 16 2009

OFFICE OF PETITIONS

| | | |
|---|---|---|
| In re Application of | : | |
| Burns et al. | : | ON APPLICATION FOR |
| Application No. 10/954,682 | : | PATENT TERM ADJUSTMENT |
| Filed: September 30, 2004 | : | |
| Atty Docket No. 02-348-C | : | |

This is in response to the "REQUEST FOR RECONSIDERATION OF THE PATENT TERM ADJUSTMENT," filed January 6, 2009. Applicants request that the determination of patent term adjustment be increased from 782 days to 1166 days.

The request is **DISMISSED**.

Applicants are advised that § 1.705(b) provides the avenue before the Office for requesting reconsideration of the patent term adjustment indicated in the notice of allowance. See § 1.702-1.705. Moreover, § 1.705(b) provides that:

> An application for patent term adjustment under this section must be filed no later than the payment of the issue fee but may not be filed earlier than the date of mailing of the notice of allowance. An application for patent term adjustment under this section must be accompanied by:
>
> (1) The fee set forth in § 1.18(e) ...

The instant application for patent term adjustment was filed after the mailing of the notice of allowance and with payment of the issue fee. Thus, the application for patent term adjustment was timely filed. However, neither the fee under § 1.18(e) nor a general authorization to charge any required fees, accompanied

the application for patent term adjustment. Accordingly, the request is dismissed for failure to comply with the requirement of paragraph (b)(1) to submit the fee under §1.18(e). Applicant is not precluded from promptly paying the required fee for consideration of this application for patent term adjustment. Applicant should call the undersigned upon submission of such fee.

However, with respect to Office delay in taking more than 3 years to issue the patent, rather than file the request for reconsideration of Patent Term Adjustment at the time of the mailing of the notice of allowance, applicant is advised that they may wait until the time of the issuance of the patent and file a request for reconsideration of the patent term pursuant to 37 CFR 1.705(d). The USPTO notes that it does not calculate the amount of time earned pursuant to 37 CFR 1.702(b) until the time of the issuance of the patent and accordingly, the Office will consider any request for reconsideration of the patent term adjustment due to an error in the calculation of 37 CFR 1.702(b) to be timely if the request for reconsideration is filed within two months of the issuance of the patent.

The Office of Data Management has been advised of this decision and directed to go forward with processing of this application into a patent.

Telephone inquiries specific to this matter should be directed to the undersigned at (571) 272-3219.

Nancy Johnson
Senior Petitions Attorney
Office of Petitions

UNITED STATES PATENT AND TRADEMARK OFFICE

Commissioner for Patents
United States Patent and Trademark Office
P.O. Box 1450
Alexandria, VA 22313-1450
www.uspto.gov

Paper No.

MBHB/TRADING TECHNOLOGIES
300 SOUTH WACKER DRIVE
SUITE 3200
CHICAGO IL 60606

**MAILED**

**APR 14 2010**

**OFFICE OF PETITIONS**

| | | |
|---|---|---|
| In re Patent No. 7,523,064 | : | DECISION ON REQUEST |
| Burns et al. | : | FOR RECONSIDERATION OF |
| Issue Date: April 21, 2009 | : | PATENT TERM ADJUSTMENT |
| Application No. 10/954,682 | : | and |
| Filed: September 30, 2004 | : | NOTICE OF INTENT TO ISSUE |
| Attorney Docket No. 02-348-C | : | CERTIFICATE OF CORRECTION |

This is a decision on the petition filed on April 30, 2009, which is being treated as a petition under 37 CFR 1.705(d) requesting that the patent term adjustment indicated on the above-identified patent be corrected to indicate that the term of the above-identified patent is extended or adjusted by one thousand one hundred forty-four (1144) days.

The petition to correct the patent term adjustment indicated on the above-identified patent is **GRANTED to the extent indicated herein.** The patent term adjustment is corrected to indicate that the term of the above-identified patent is extended or adjusted by **one thousand one hundred thirty-two (1132)** days.

Patentee's calculation of B delay (37 C.F.R. 1.702(b)) as 391 days is incorrect. Patentee fails to include the A delay of 11 days associated with the mailing of the notice of allowance on December 9, 2008 as overlapping with the B delay. B delay is 380 (569 - 178 - 11) days.

Further, patentee is incorrect in their contention that the applicant delay associated with the 312 amendment filed January 6, 2009 is 29 days, not 30 days. Patentee is advised that the period of delay pursuant to 37 CFR 1.704(c)(10) is "beginning" on the date of filing of the amendment. As stated in MPEP 2731, when a period is indicated (in 37 CFR 1.703 or 1.704) as "beginning" on a particular day, that day is included in the

period, in that such day is "day one" of the period and not "day zero." For example, a period beginning on April 1 and ending on April 10 is ten (and not nine) days in length. Thus, in this instance, the period of delay is 30 days, beginning on January 6, 2009 and ending on February 4, 2009, the date of mailing of the Office's response.

As such, the patent term adjustment is 1132 (752 + 380) days.

The Office will *sua sponte* issue a certificate of correction. Pursuant to 37 CFR 1.322, the Office will not issue a certificate of correction without first providing assignee or patentee an opportunity to be heard. Accordingly, patentees are given **one (1) month or thirty (30) days**, whichever is longer, from the mail date of this decision to respond. No extensions of time will be granted under § 1.136.

The Office acknowledges submission of the $200.00 fee set forth in 37 CFR 1.18(e). No additional fees are required.

The application is being forwarded to the Certificates of Branch for issuance of a certificate of correction. The Office will issue a certificate of correction indicating that the term of the above-identified patent is extended or adjusted by **one thousand one hundred thirty-two (1132)** days.

Telephone inquiries specific to this matter should be directed to the undersigned at (571) 272-3219.

Nancy Johnson

Nancy Johnson
Senior Petitions Attorney
Office of Petitions

Enclosure: Copy of DRAFT Certificate of Correction

UNITED STATES PATENT AND TRADEMARK OFFICE

# CERTIFICATE OF CORRECTION

PATENT : 7,523,064 B2

DATED : **April 21, 2009** **DRAFT**

INVENTOR(S) : Burns et al.

It is certified that error appears in the above-identified patent and that said Letters Patent is hereby
corrected as shown below:

On the cover page,

[*] Notice: Subject to any disclaimer, the term of this patent is extended or adjusted under 35 USC 154(b) by 752 days

Delete the phrase "by 752 days" and insert – by 1132 days--

UNITED STATES PATENT AND TRADEMARK OFFICE

Commissioner for Patents
United States Patent and Trademark Office
P.O. Box 1450
Alexandria, VA 22313-1450
www.uspto.gov

ROCCO L. ADORNATO
C/O WEST CORPORATION
11808 MIRACLE HILLS DRIVE
MAIL STOP: W11-LEGAL
OMAHA, NE 68135

COPY MAILED

SEP 29 2005

OFFICE OF PETITIONS

| | | |
|---|---|---|
| In re Application of | : | |
| Todd B. Strubbe | : | |
| Application No. 10/954,688 | : | ON PETITION |
| Filed: September 30, 2004 | : | |
| Attorney Docket No.: | : | |
| PAT-009L2 | : | |

This is in response to the petition filed to revive the application for patent abandoned unavoidably under 37 CFR 1.137(a), filed September 8, 2005.

The petition under 37 CFR 1.137(a) is dismissed.

Any further petition to revive the above-identified application (under 37 CFR 1.137(a)), must be submitted within TWO (2) MONTHS from the mail date of this decision. Extensions of time under 37 CFR 1.136(a) are permitted. The reconsideration request should include a cover letter entitled "Request for Reconsideration of Petition under 37 CFR 1.137", and be addressed to Petitions Attorney Derek L. Woods. This is **not** final agency action within the meaning of 5 U.S.C. § 704.

Background:

The above-identified application became abandoned for failure to timely and properly reply to the Notice to File Missing Parts of Nonprovisional Application ("Notice"), mailed November 15, 2004. The Notice set a two (2) month period for reply. No reply having been received, the application became abandoned on January 16, 2005. A Notice of Abandonment was mailed August 17, 2005.

The instant petition

Applicant files the instant petition and asserts that a timely response was filed via facsimile in this Office on January 11,

2005, and refers to an Appendix A filed with the petition. Applicant notes that, although the transmission cover sheet included an incorrect serial number, all other documentation following the coversheet had the correct serial number. Applicant's subsequently telephone this Office and learned that the submission had not been received by this Office and re-faxed the response with a coversheet that included the correct serial number.

A Grantable Petition Under 37 CFR 1.137(a)

A grantable petition to revive an abandoned application under 37 CFR 1.137(a) must be accompanied by: (**1**) the required reply (unless previously filed), which may met by the filing of a notice of appeal and the requisite fee; a Request for Continued Examination; an amendment or request for reconsideration which *prima facie* places the application in condition for allowance, or a first or second submission under 37 CFR 1.129(a) if the application has been pending for at least two years as of June 8, 1995, taking into account any reference made in such application to any earlier filed application under 35 USC 120, 121 and 365(c); (**2**) the petition fee as set forth in 37 CFR 1.17(l); (**3**) a showing to the satisfaction of the Commissioner that the entire delay in filing the required reply from the due date for the reply until the filing of a grantable petition pursuant to 37 CFR 1.137(a) was unavoidable; and (**4**) any terminal disclaimer (and fee as set forth in 37 CFR 1.20(d)) required pursuant to 37 CFR 1.137(c).

Applicant lacks item (**3**) as set forth above.

Applicable Law

37 CFR § 1.8, Certificate of mailing or transmission, provides:

> (a) Except in the cases enumerated in paragraph (a)(2) of this section, correspondence required to be filed in the Patent and Trademark Office within a set period of time will be considered as being timely filed if the procedure described in this section is followed. The actual date of receipt will be used for all other purposes.

(b) In the event that correspondence is considered timely filed by being mailed or transmitted in accordance with paragraph (a) of this section, but not received in the Patent and Trademark Office, and the application is held to be abandoned or the proceeding is dismissed, terminated, or decided with prejudice, the correspondence will be considered timely if the party who forwarded such correspondence:

(1) Informs the Office of the previous mailing or transmission of the correspondence promptly after becoming aware that the Office has no evidence of receipt of the correspondence;

(2) Supplies an additional copy of the previously mailed or transmitted correspondence and certificate; and

(3) Includes a statement which attests on a personal knowledge basis or to the satisfaction of the Director to the previous timely mailing or transmission. If the correspondence was sent by facsimile transmission, a copy of the sending unit's report confirming transmission may be used to support this statement.

(c) <u>The Office may require additional evidence to determine if the correspondence was timely filed</u>. (Emphasis supplied).

Further to this, 37 CFR 1.6(d), Facsimile transmission, provides that

Except in the cases enumerated below, correspondence, including authorizations to charge a deposit account, may be transmitted by facsimile. The receipt date accorded to the correspondence will be the date on which the complete transmission is received in the United States Patent and Trademark Office, unless that date is a Saturday, Sunday, or Federal holiday within the District of Columbia. See § 1.6(a)(3). To facilitate proper processing, each transmission session should be limited to correspondence to be filed in a single application or other proceeding

> before the United States Patent and Trademark Office. The application number of a patent application, the control number of a reexamination proceeding, the interference number of an interference proceeding, or the patent number of a patent should be entered as a part of the sender's identification on a facsimile cover sheet. (Emphasis supplied).

The Manual of Patent Examining Procedure ("MPEP") 502 provides that

A minor error in the identification of the application can be corrected by the Office provided the correct identification can be quickly discovered. Examples of minor errors are transposed numbers, typographical errors, and listing the parent application number. (Emphasis supplied).

This section further cautions that

> [w]here the art unit number is entirely omitted, the routine operations of OIPE must be interrupted solely for the purpose of determining the location of the application so that the communication can be properly routed. Under these circumstances, the efficiency of OIPE is impaired and the incoming paper is delayed in reaching its proper destination. (Emphasis supplied).

Finally, the MPEP requests that

> *all* incoming papers pertaining to a filed application carr[y] the following items:
> (A) Application number (checked for accuracy, including series code and serial no.).
> (B) Art Unit number (copied from most recent Office communication).
> (C) Filing date.
> (D) Name of the examiner who prepared the most recent Office action.
> (E) Title of invention.
> (F) Confirmation number (see MPEP § 503).

Applicant's Assertion

Applicant asserts that a timely response to the Notice was faxed to the Patent Office on January 11, 2005. In support of this

assertion, Applicant provides a copy of the facsimile cover sheet and a copy of the Transmittal Form.

Analysis

As to item (3), Applicant has failed to demonstrate that the delay in responding to the final Office action was unavoidable, or that a response was filed in this Office on January 11, 2005.

A review of the copy of the Fax Coversheet filed with the petition reveals that the coversheet does not contain any information that would allow the Office of Initial Patent Examination to correctly identify the application. As Applicant has provided, the serial number on the Fax Coversheet is incorrect. A further review of the Fax Coversheet reveals that there are no other indicia thereon that would allow this Office to quickly discover the correct application.

A review of the Transmittal Form reveals that, while the form does contain a Certificate of Mailing under 37 CFR 1.8, there is no indication thereon that would corroborate that the Transmittal Form was received in this Office on January 11, 2005[1]. Moreover, Applicant has failed to provide the facsimile telephone number where the transmission was sent.

Finally, a review of the contents of application serial number 10955,568 reveals that there was no correspondence filed therein on or about January 11, 2005.

Conclusion

Applicant has failed to satisfactorily demonstrate that the response to the Notice was timely filed in this Office on January 11, 2005. The Fax Coversheet failed to comply with 37 CFR 1.6(d) and the MPEP. A "delay (in responding) resulting from the lack of knowledge or improper application of the patent

[1] For instance, the Fax Coversheet contains a Message Confirmation Receipt indicating that the Fax Coversheet was transmitted on January 11, 2005; however, the Transmittal Form contains no such indication. Also, all of the correspondence filed with the instant petition on September 8, 2005 includes receipt information thereon including the date and time of receipt in this Office. There is nothing to indicate that the oath/declaration, Power of Attorney or Transmittal Form were received in this Office on or about January 11, 2005.

statute, rules of practice, or MPEP, [] does not constitute unavoidable delay." MPEP 711.03(c).

Alternative venue

Applicant is strongly urged to file a petition stating that the delay was unintentional. An "unintentional" petition under 37 CFR 1.137(b) must be accompanied by the required fee, currently $750.00.

The filing of a petition under 37 CFR 1.137(b) cannot be intentionally delayed and therefore must be filed promptly. A person seeking revival due to unintentional delay can not make a statement that the delay was unintentional unless the entire delay, including the delay from the date it was discovered that the application was abandoned until the filing of the petition to revive under 37 CFR 1.137(b), was unintentional. A statement that the delay was unintentional is not appropriate if petitioner intentionally delayed the filing of a petition for revive under 37 CFR 1.137(b).

Further correspondence with respect to this matter should be addressed as follows:

By mail: Commissioner for Patents
PO Box 1450
Alexandria, VA 22313-1450

By FAX: (571) 273-8300
Attn: Office of Petitions

By hand: Customer Service Window
Randolph Building
401 Dulany Street
Alexandria, VA 22314

Telephone inquiries concerning this matter should be directed to the undersigned at (571) 272-3232.

Derek L. Woods
Attorney
Office of Petitions

UNITED STATES PATENT AND TRADEMARK OFFICE

Commissioner for Patents
United States Patent and Trademark Office
P.O. Box 1450
Alexandria, VA 22313-1450
www.uspto.gov

ROCCO L. ADORNATO
C/O WEST CORPORATION
11808 MIRACLE HILLS DRIVE
MAIL STOP: W11-LEGAL
OMAHA, NE 68135

**COPY MAILED**

NOV 0 2 2005

**OFFICE OF PETITIONS**

| | | |
|---|---|---|
| In re Application of | : | |
| Todd B. Strubbe | : | |
| Application No. 10/954,688 | : | ON PETITION |
| Filed: September 30, 2004 | : | |
| Attorney Docket No.: | : | |
| PAT-009L2 | : | |

This is in response to the petition filed to revive the application for patent abandoned unintentionally under 37 CFR 1.137(b), filed September 8, 2005.

The petition under 37 CFR 1.137(a) is granted.

The above-identified application became abandoned for failure to timely and properly reply to the Notice to File Missing Parts of Nonprovisional Application ("Notice"), mailed November 15, 2004. The Notice set a two (2) month period for reply. No reply having been received, the application became abandoned on January 16, 2005. A Notice of Abandonment was mailed August 17, 2005.

With the instant petition, Applicant files an executed oath/declaration and the appropriate fees.

Accordingly, the petition is granted.

The application file is being referred to the Office of Initial Patent Examination for continued processing in due course.

Telephone inquiries concerning this matter should be directed to the undersigned at (571) 272-3232.

Derek L. Woods
Attorney
Office of Petitions

UNITED STATES PATENT AND TRADEMARK OFFICE

Commissioner for Patents
United States Patent and Trademark Office
P.O. Box 1450
Alexandria, VA 22313-1450
www.uspto.gov

**MORGAN, LEWIS & BOCKUS, LLP**
**2 PALO ALTO SQUARE**
**3000 EL CAMINO REAL**
**PALO ALTO CA 94306**

COPY MAILED
SEP 29 2008

| | | |
|---|---|---|
| In re Application of | : | |
| Terry N. ADAMS, et al | : | |
| Application No. 10/954,691 | : | DECISION ON PETITION |
| Filed: September 29, 2004 | : | TO WITHDRAW |
| Attorney Docket No. 061136-5001US | : | FROM RECORD |
| | : | |

This is a decision on the Request to Withdraw as attorney or agent of record under 37 C.F.R. § 1.36(b), filed August 27, 2008.

The request is **NOT APPROVED.**

A grantable request to withdraw as attorney/agent of record must be signed by every attorney/agent seeking to withdraw or contain a clear indication that one attorney is signing on behalf of another/others. The Office requires the practitioner(s) requesting withdrawal to certify that he, she, or they have: (1) given reasonable notice to the client, prior to the expiration of the response period, that the practitioner(s) intends to withdraw from employment; (2) delivered to the client or a duly authorized representative of the client all papers and property (including funds) to which the client is entitled; and (3) notified the client of any responses that may be due and the time frame within which the client must respond, pursuant 37 CFR 10.40(c).

The request cannot be approved because there is no indication that the acts noted above have been performed.

All future communications from the Office will continue to be directed to the above-listed address until otherwise notified by applicant.

Telephone inquiries concerning this decision should be directed to the undersigned at 571-272-6735

Diane Goodwyn
Petitions Examiner
Office of Petitions

cc: THOMAS D. KOHLER
DOWNS RACHLIN MARTIN PLLC
COURTHOUSE PLAZA,
199 MAIN STREET
BURLINGTON, VT 05402-0190

UNITED STATES PATENT AND TRADEMARK OFFICE

UNITED STATES DEPARTMENT OF COMMERCE
United States Patent and Trademark Office
Address: COMMISSIONER FOR PATENTS
P.O. Box 1450
Alexandria, Virginia 22313-1450
www.uspto.gov

Morgan, Lewis & Bockius LLP/Google
2 Palo Alto Square
3000 El Camino Real, Suite 700
Palo Alto, CA 94306

Mail Date: 04/20/2010

| | | |
|---|---|---|
| **Applicant** | : Robert C. Pike | : DECISION ON REQUEST FOR |
| **Patent Number** | : 7590620 | : RECALCULATION of PATENT |
| **Issue Date** | : 09/15/2009 | : TERM ADJUSTMENT IN VIEW |
| **Appliction No** | : 10/954,692 | : OF WYETH AND NOTICE OF INTENT TO |
| **Filed** | : 09/29/2004 | : ISSUE CERTIFICATE OF CORRECTION |
| | | : |

The Request for Recalculation is **GRANTED** to the extent indicated.

The patent term adjustment has been determined to be **443** days. The USPTO will *sua sponte* issue a certificate of correction reflecting the amount of PTA days determined by the recalculation.

Prior to the issuance of the certificate of correction, the USPTO will afford patentee an opportunity to be heard and request reconsideration. Accordingly, patentee has **one month or thirty (30) days**, whichever is longer, to file a request for reconsideration of this patent term adjustment calculation. See 35 U.S.C. 154(b)(3)(B)(ii) and 37 CFR 1.322(a)(4). No extensions of time will be granted under 37 CFR 1.136.

Patentee should use document code PET.OP if electronically filing a request for reconsideration of this patent term adjustment calculation. The patentee must also include the information required by 37 CFR 1.705(b)(2) and the fee required by 37 CFR 1.18(e). If patentee does not file a timely request for reconsideration of this patent term adjustment calculation including the information required by 37 CFR 1.705(b)(2) and the fee required by 37 CFR 1.18(e), the USPTO will issue a certificate of correction reflecting the PTA determination noted above.

Patentee should be aware that in order to preserve the right to review in the United States District Court for the District of Columbia of the USPTO patent term adjustment determination, patentee must ensure that he or she also take the steps required under 35 U.S.C. 154(b)(4)(A) in a timely manner. Nothing in the request for recalculation should be construed as providing an alternative time frame for commencing a civil action under 35 U.S.C. 154(b)(4)(A).

Any questions concerning this decision should be directed to the Office of Patent Legal Administration at 571-272-7702.

UNITED STATES PATENT AND TRADEMARK OFFICE

UNITED STATES DEPARTMENT OF COMMERCE
United States Patent and Trademark Office
Address: COMMISSIONER FOR PATENTS
P.O. Box 1450
Alexandria, Virginia 22313-1450
www.uspto.gov

Morgan, Lewis & Bockius LLP/Google
2 Palo Alto Square
3000 El Camino Real, Suite 700
Palo Alto, CA 94306

Mail Date: 05/17/2010

**Applicant** : Robert C. Pike
**Patent Number** : 7590620
**Issue Date** : 09/15/2009
**Application No** : 10/954,692
**Filed** : 09/29/2004

: NOTICE CONCERNING IMPROPER
: CALCULATION OF PATENT TERM
: ADJUSTMENT BASED UPON USPTO
: IMPROPERLY MEASURING REDUCTION
: PERIOD UNDER 37 CFR 1.704(c)(10).

The United States Patent and Trademark Office (USPTO) discovered that in processing the recent recalculation decisions mailed in response to patentee's filed Request for Recalculation of Patent Term Adjustment in view of Wyeth, the USPTO improperly measured the reduction period for reductions under 37 CFR 1.704(c)(10). Pursuant to 37 CFR 1.704(c)(10), patentee's reduction begins on the date of filing the amendment under 37 CFR 1.312 ("1.312 amendment") or other related paper and ends on the date that the Office mails a response to the filing of the 1.312 amendment or other paper. It has been discovered that during the recalculation, the calculation failed to the limit the reduction to the mail date of the response to the 1.312 amendment or other paper. Accordingly, patentee's reductions were greater than warranted.

This notice **VACATES** the previous GRANTED request for recalculation and provides patentee with a revised GRANTED recalculation.

The patent term adjustment has been determined to be **558** days. The USPTO will *sua sponte* issue a certificate of correction reflecting the amount of patent term adjustment (PTA) days determined by the recalculation.

Prior to the issuance of the certificate of correction, the USPTO will afford patentee an opportunity to be heard and request reconsideration. Accordingly, patentee has **one month or thirty (30) days** from the mail date of this notice, whichever is longer, to file a request for reconsideration of this PTA calculation. See 35 U.S.C. § 154(b)(3)(B)(ii) and 37 CFR 1.322(a)(4).

Patentee should use document code PET.OP if electronically filing a request for reconsideration of this PTA calculation. The patentee must also include the information required by 37 CFR 1.705(b)(2), and the fee required by 37 CFR 1.18(e). If patentee does not file a timely request for reconsideration of this PTA calculation, including the information required by 37 CFR 1.705(b)(2) and the fee required by 37 CFR 1.18(e), the USPTO will issue a certificate of correction reflecting the PTA determination noted above.

Patentee should be aware that in order to preserve the right of review of the USPTO's PTA determination in the United States District Court for the District of Columbia, patentee must ensure that the steps required under 35 U.S.C. § 154 (b)(4) are taken in a timely manner. Nothing in the request for recalculation should be construed as providing an alternative time frame for commencing a civil action under 35 U.S.C. § 154(b)(4).

UNITED STATES PATENT AND TRADEMARK OFFICE

Commissioner for Patents
United States Patent and Trademark Office
P.O. Box 1450
Alexandria, VA 22313-1450
www.uspto.gov

Paper No. None

MANATT PHELPS AND PHILLIPS
ROBERT D. BECKER
1001 PAGE MILL ROAD, BUILDING 2
PALO ALTO CA 94304

COPY MAILED

OCT 0 3 2005

OFFICE OF PETITIONS

| | | |
|---|---|---|
| In re Application of | : | |
| Karapet Ablabutyan and Parkev Krmoian | : | DECISION ON PETITION |
| Application No. 10/954,697 | : | UNDER 37 C.F.R. §1.47(a) |
| Filed: September 29, 2004 | : | |
| Attorney Docket No. 23451-041 | : | |
| Title: WHEELCHAIR LIFT | : | |

This is in response to the petition under 37 C.F.R. §1.47(a)[1], filed July 7, 2005.

On September 29, 2004, the application was deposited. No oath or declaration was included on filing. On December 3, 2004, a "Notice to File Missing Parts of Nonprovisional Application – Filing Date Granted" (Notice) was mailed, indicating that a fully executed oath or declaration and the associated surcharge were required, along with replacement drawings. This Notice set a two-month period for reply.

With the present petition, Petitioner has submitted the petition fee, the associated surcharge, a statement of facts, and a declaration which has been signed by the first listed joint inventor. Petitioner has further included a five-month extension of time to make timely this response.

---

1A grantable petition under 37 C.F.R. §1.47(a) requires:

(1) the petition fee of $130;
(2) a surcharge of either $65 or $130 if the petition is not filed at the time of filing the application, as set forth in 37 CFR § 1.16(e);
(3) a statement of the last known address of the non-signing inventors;
(4) either
  a) proof that a copy of the entire application (specification, claims, drawings, and the oath or declaration) was sent or given to the non-signing inventor for review and proof that the non-signing inventor refuses to join in the application or
  b) proof that the non-signing inventor cannot be found or reached after diligent effort;
(5) a declaration which complies with 37 CFR §1.63.

Petitioner has met requirements (1) – (3) and (5) of 37 C.F.R. §1.47(a).

Regarding the fourth requirement, the signing inventor has set forth that he went to the residence of the non-signing inventor in an attempt to secure his signature on this declaration. The signing inventor further sets forth that the non-signing inventor requested more time to review the application papers, however it is not evident if the non-signing inventor was ever presented with a complete copy of the same.

As such, it is not clear if a complete copy of the application was sent to the last known address of the non-signing inventor.

It follows that one cannot refuse to sign something which one has not been presented with. A refusal by an inventor to sign an oath or declaration when the inventor has not been presented with the application papers does not itself suggest that the inventor is refusing to join the application unless it is clear that the inventor understands exactly what he or she is being asked to sign and refuses to accept the application papers. It is reasonable to require that the inventor be presented with the application papers before a petition under 37 CFR §1.47 is granted since such a procedure ensures that the inventor is apprised of the application to which the oath or declaration is directed[2].

If a complete copy of the application was never provided to the non-signing inventor, Petitioner may wish to consider sending a complete copy of the application to the non-signing inventor and waiting an appropriate period of time before submitting any renewed petition, in order to provide him with the opportunity to respond.

As such, the petition must be **DISMISSED**.

Any reply must be submitted within **TWO (2) MONTHS** from the mail date of this decision. Extensions of time under 37 C.F.R. §1.136(a) are permitted. The reply should include a cover letter entitled "Renewed Petition Under 37 C.F.R. §1.47(a)." This is not a final agency action within the meaning of 5 U.S.C 704. The renewed petition should indicate in a prominent manner that the attorney handling this matter is Paul Shanoski. Any renewed petition may be submitted by mail[3], hand-delivery[4], or facsimile[5].

Telephone inquiries regarding *this decision* should be directed to the undersigned at (571) 272-3225. All other inquiries concerning examination procedures or status of the application should be directed to the Technology Center.

**Paul Shanoski**
**Senior Attorney**
**Office of Petitions**
**United States Patent and Trademark Office**

2 In re Gray, 115 USPQ 80 (Comm'r Pat. 1956).
3 Mail Stop Petition, Commissioner for Patents, United States Patent and Trademark Office, P.O. Box 1450, Alexandria, VA, 22313-1450.
4 Customer Window, Randolph Building, 401 Dulaney Street, Alexandria, VA, 22314.
5 (571) 273-8300- please note this is a central facsimile number.

UNITED STATES PATENT AND TRADEMARK OFFICE

COMMISSIONER FOR PATENTS
UNITED STATES PATENT AND TRADEMARK OFFICE
P.O. BOX 1450
ALEXANDRIA, VA 22313-1450
WWW.USPTO.GOV

Paper No. None

MANATT PHELPS AND PHILLIPS
ROBERT D. BECKER
1001 PAGE MILL ROAD, BUILDING 2
PALO ALTO CA 94304

**COPY MAILED**

DEC 14 2005

**OFFICE OF PETITIONS**

| | | |
|---|---|---|
| In re Application of | : | |
| Karapet Ablabutyan and Parkev Krmoian | : | DECISION ON RENEWED PETITION |
| Application No. 10/954,697 | : | UNDER 37 C.F.R. §1.47(a) |
| Filed: September 29, 2004 | : | |
| Attorney Docket No. 23451-041 | : | |
| Title: WHEELCHAIR LIFT | : | |

This is in response to the renewed petition under 37 C.F.R. §1.47(a)[1], filed December 5, 2005.

On September 29, 2004, the application was deposited. No oath or declaration was included on filing. On December 3, 2004, a "Notice to File Missing Parts of Nonprovisional Application – Filing Date Granted" (Notice) was mailed, indicating that a fully executed oath or declaration and the associated surcharge were required, along with replacement drawings. This Notice set a two-month period for reply.

---

1 A grantable petition under 37 C.F.R. §1.47(a) requires:

(1) the petition fee of $130;
(2) a surcharge of either $65 or $130 if the petition is not filed at the time of filing the application, as set forth in 37 CFR § 1.16(e);
(3) a statement of the last known address of the non-signing inventors;
(4) either
  a) proof that a copy of the entire application (specification, claims, drawings, and the oath or declaration) was sent or given to the non-signing inventor for review and proof that the non-signing inventor refuses to join in the application or
  b) proof that the non-signing inventor cannot be found or reached after diligent effort;
(5) a declaration which complies with 37 CFR §1.63.

The original petition under 37 C.F.R. §1.47(a) was submitted on July 7, 2005 and was dismissed via the mailing of a decision on October 3, 2005 for failing to establish that a complete copy of the application was presented to the non-signing joint inventor.

With this renewed petition, this deficiency has been corrected.

Therefore, the renewed petition is **GRANTED** and this application is hereby accorded Rule §1.47(a) status.

As provided in Rule 1.47(a), this Office will forward notice of this application's filing to the non-signing inventors at the addresses given on the declaration. Notice of the filing of this application will also be published in the Official Gazette.

Telephone inquiries regarding this decision should be directed to the undersigned at (571) 272-3225. All other inquiries concerning examination procedures or status of the application should be directed to the Technology Center.

Paul Shanoski
Senior Attorney
Office of Petitions
United States Patent and Trademark Office

OIPE IAP79
JUN 0 9 2006
PATENT & TRADEMARK OFFICE

FILE

UNITED STATES PATENT AND TRADEMARK OFFICE

RECEIVED
PALO ALTO
DEC 1 9 2005
MANATT PHELPS & PHILLIPS

COMMISSIONER FOR PATENTS
UNITED STATES PATENT AND TRADEMARK OFFICE
P.O. BOX 1450
ALEXANDRIA, VA 22313-1450
WWW.USPTO.GOV

DOCKETED
BY
DATE 12/19/06
Petition Granted

Paper No. None

MANATT PHELPS AND PHILLIPS
ROBERT D. BECKER
1001 PAGE MILL ROAD, BUILDING 2
PALO ALTO CA 94304

COPY MAILED
DEC 1 4 2005
OFFICE OF PETITIONS

| | | |
|---|---|---|
| In re Application of | : | |
| Karapet Ablabutyan and Parkev Krmoian | : | DECISION ON RENEWED PETITION |
| Application No. 10/954,697 | : | UNDER 37 C.F.R. §1.47(a) |
| Filed: September 29, 2004 | : | |
| Attorney Docket No. 23451-041 | : | |
| Title: WHEELCHAIR LIFT | : | |

This is in response to the renewed petition under 37 C.F.R. §1.47(a)[1], filed December 5, 2005.

On September 29, 2004, the application was deposited. No oath or declaration was included on filing. On December 3, 2004, a "Notice to File Missing Parts of Nonprovisional Application – Filing Date Granted" (Notice) was mailed, indicating that a fully executed oath or declaration and the associated surcharge were required, along with replacement drawings. This Notice set a two-month period for reply.

---

1A grantable petition under 37 C.F.R. §1.47(a) requires:

(1) the petition fee of $130;
(2) a surcharge of either $65 or $130 if the petition is not filed at the time of filing the application, as set forth in 37 CFR § 1.16(e);
(3) a statement of the last known address of the non-signing inventors;
(4) either
  a) proof that a copy of the entire application (specification, claims, drawings, and the oath or declaration) was sent or given to the non-signing inventor for review and proof that the non-signing inventor refuses to join in the application or
  b) proof that the non-signing inventor cannot be found or reached after diligent effort;
(5) a declaration which complies with 37 CFR §1.63.

The original petition under 37 C.F.R. §1.47(a) was submitted on July 7, 2005 and was dismissed via the mailing of a decision on October 3, 2005 for failing to establish that a complete copy of the application was presented to the non-signing joint inventor.

With this renewed petition, this deficiency has been corrected.

Therefore, the renewed petition is **GRANTED** and this application is hereby accorded Rule §1.47(a) status.

As provided in Rule 1.47(a), this Office will forward notice of this application's filing to the non-signing inventors at the addresses given on the declaration. Notice of the filing of this application will also be published in the Official Gazette.

Telephone inquiries regarding this decision should be directed to the undersigned at (571) 272-3225. All other inquiries concerning examination procedures or status of the application should be directed to the Technology Center.

Paul Shanoski
Senior Attorney
Office of Petitions
United States Patent and Trademark Office

UNITED STATES PATENT AND TRADEMARK OFFICE

COMMISSIONER FOR PATENTS
UNITED STATES PATENT AND TRADEMARK OFFICE
P.O. BOX 1450
ALEXANDRIA, VA 22313-1450
WWW.USPTO.GOV

OIPE IAP79
JUN 0 9 2006
PATENT & TRADEMARK OFFICE

Parkev Krmoian
520 W. Elk Avenue #105
Glendale, California 91204

COPY MAILED
DEC 1 4 2005
OFFICE OF PETITIONS

In re Application of

Karapet Ablabutyan and Parkev Krmoian
Application No. 10/954,697

Filed: September 29, 2004
Attorney Docket No. 23451-041
Title: WHEELCHAIR LIFT

LETTER

Dear Mr. Krmoian:

You are named as a joint inventor in the above-identified United States patent application filed under the provisions of 35 U.S.C. 116 (United States Code) and 37 CFR 1.47(a), Rules of Practice in Patent Cases. Should a patent be granted on the application, you will be designated therein as a joint inventor.

As a named joint inventor you are entitled to inspect any paper in the file wrapper of the application, order copies of all or any part thereof (at a prepaid cost per 37 CFR 1.19) or make your position of record in the application. Alternatively, you may arrange to do any of the preceding through a registered patent attorney or agent presenting written authorization from you. If you care to join the application, the attorney of record below would presumably assist you. Joining in the application would entail the filing of an appropriate oath or declaration by you pursuant to 37 CFR 1.63.

Telephone inquiries regarding this communication should be directed to the undersigned at (571) 272-3225. Requests for information regarding your application should be directed to the File Information Unit at (703) 308-2733. Information regarding how to pay for and order a copy of the application, or a specific paper in the application, should be directed to the Certification Division at (703) 308-9726 or 1-800-972-6382 (outside the Washington D.C. area).

Paul Shanoski
Senior Attorney
Office of Petitions
United States Patent and Trademark Office

cc: MANATT PHELPS AND PHILLIPS
ROBERT D. BECKER
1001 PAGE MILL ROAD, BUILDING 2
PALO ALTO CA 94304

OIPE
DEC 06 2005

Best Available Copy

PATENT
Atty Docket No.: 23451-041

PATENT

# IN THE UNITED STATES PATENT AND TRADEMARK OFFICE

| | | | |
|---|---|---|---|
| Application No. | 10/954,697 | Examiner | Gregory W. Adams |
| Inventor(s) | Ablabutyan et al. | Art Unit/Conf. No. | 3652 / 5084 |
| Filed | September 29, 2004 | Attorney Docket | 23451-041 |
| Title: | WHEELCHAIR LIFT | | |

Mail Stop Petitions
Commissioner for Patents
P.O. Box 1450
Alexandria, Virginia 22313-1450
**Attention: Paul Shanoski**

FIRST CLASS CERTIFICATE OF MAILING
I hereby certify that this correspondence is being deposited with the United States Postal Service with sufficient postage as First Class Mail in an envelope addressed Mail Stop Petition, Commissioner for Patents, P.O. Box 1450, Alexandria, VA 22313-1450, on

November 30, 2005

Vicki Lip

## RENEWED PETITION UNDER 37 CFR 1.47(a)

Dear Sir:

In accordance with the requirements of 37 CFR 1.47(a), Petitioner hereby submits this Renewed Petition (and the appropriate fee) in response to the Decision on Petition Under 37 CFR §1.47(a) dismissing Petitioner's prior Petition filed July 7, 2005 (copies enclosed).

### REMARKS

Examiner Shanoski stated in the Decision on Petition, "Petitioner has met requirements (1) – (3) and (5) of 37 CFR §1.47(a)." (p.2, l.1).

In order to comply more fully with the fourth requirement, Petitioner sent on November 10, 2005, a copy of the application and drawings as filed along with a copy of the Declaration for Utility or Design Patent and an Assignment document to Inventor Parkev Krmoian at his last known address:

12/06/2005 ZJUHAR1 00000027 501847 10954697
01 FC:1463 200.00 DA

Best Available Copy

520 W. Elk Avenue #105, Glendale, California, 91204 via Federal Express. Also enclosed therein was a prepaid, pre-addressed return Federal Express envelope dated November 16, 2005, for Mr. Krmoian's use (copies enclosed).

Mr. Krmoian signed for receipt of the Federal Express envelope as evidenced by the enclosed printout from the Federal Express Tracking site on November 12, 2005.

As of November 29, 2005, the return Federal Express envelope has not been entered into the Federal Express system indicating that Mr. Krmoian has not yet complied with our request.

Enclosed for the Examiner's convenience is a copy of the originally filed Petition with the attached Exhibit A – Statement of Facts. Additionally, a copy of the Assignment executed in the parent case, 10/251,433 filed September 20, 2002 and the Notice of Recordation therefor are also enclosed. In this Assignment executed by Assignor (Parkev Krmoian) it is stated:

> "...Assignor further agrees that he will, without charge to said Assignee, but at Assignee's expense, cooperate with Assignee in the prosecution of said application and/or applications for Letters Patent and for the reissue thereof, and instruments of assignment and transfer thereof, and will perform such other acts as Assignee lawfully may request, to obtain or maintain Letters Patent for said invention ***and improvement*** in any and all countries, and to vest title thereto in said Assignee, or Assignee's successors and assigns. ..." (Emphasis added)

In view of the forgoing, Applicant respectfully requests the Office to grant the instant petition and accept the declaration as filed herewith.

Respectfully submitted,

Date: 11/29/05

Greg T. Warder
Registration No. 50,208
Attorney for Petitioner

MANATT, PHELPS & PHILLIPS LLP
1001 Page Mill Rd, Bldg 2
Palo Alto, California 94304
650-812-1321 Telephone
650-213-0260 Facsimile

OIPE IAP77 DEC 06 2005 PATENT & TRADEMARK OFFICE
OIPE IAP79 JUN 0 9 2006 PATENT & TRADEMARK OFFICE

PTO/SB/17p (11-04)
Approved for use through 07/31/2007. OMB 0651-0031
U.S. Patent and Trademark Office; U.S. DEPARTMENT OF COMMERCE
Under the Paperwork Reduction Act of 1995, no persons are required to respond to a collection of information unless it displays a valid OMB control number.

# PETITION FEE
## Under 37 CFR 1.17(g, (g) & (h)
## TRANSMITTAL

(Fees are subject to annual revision)

**Send completed form to: Commissioner for Patents**
**P.O. Box 1450, Alexandria, VA 22313-1450**

| | |
|---|---|
| **Application Number** | 10/954,697 |
| **Filing Date** | September 29, 2004 |
| **First Named Inventor** | Ablabutyan |
| **Art Unit** | 3652 |
| **Examiner Name** | Gregory W. Adams |
| **Attorney Docket Number** | 23451-041 |

**Enclosed is a petition filed under 37 CFR** 1.47(a) **that requires a processing fee (37 CFR 1.17(f), (g), or (h)). Payment of $** 200 **is enclosed.**

This form should be included with the above-mentioned petition and faxed or mailed to the Office using the appropriate Mail Stop (e.g., Mail Stop Petition), if applicable. *For transmittal of processing fees under 37 CFR 1.17(i), see form PTO/SB/17i.*

**Payment of Fees** (small entity amounts are NOT available for the petition fees)

☒ The Commissioner is hereby authorized to charge the following fees to Deposit Account No. 50-1847
☒ petition fee under 37 CFR 1.17(f), (g) or (h) ☒ any deficiency of fees and credit of any overpayments
Enclose a duplicative copy of this form for fee processing.

☐ Check in the amount of $ _____ is enclosed.

☐ Payment by credit card (Form PTO-2038 or equivalent enclosed). Do not provide credit card information on this form.

**Petition Fees under 37 CFR 1.17(f): Fee $400 Fee Code 1462**
For petitions filed under:
§ 1.53(e) - to accord a filing date.
§ 1.57(a) - to accord a filing date.
§ 1.182 - for decision on a question not specifically provided for.
§ 1.183 - to suspend the rules.
§ 1.378(e) - for reconsideration of decision on petition refusing to accept delayed payment of maintenance fee in an expired patent.
§ 1.741(b) - to accord a filing date to an application under § 1.740 for extension of a patent term.

**Petition Fees under 37 CFR 1.17(g): Fee $200 Fee Code 1463**
For petitions filed under:
§ 1.12 - for access to an assignment record.
§ 1.14 - for access to an application.
§ 1.47 - for filing by other than all the inventors or a person not the inventor.
§ 1.59 - for expungement of information.
§ 1.103(a) - to suspend action in an application.
§ 1.136(b) - for review of a request for extension of time when the provisions of section 1.136(a) are not available.
§ 1.295 - for review of refusal to publish a statutory invention registration.
§ 1.296 - to withdraw a request for publication of a statutory invention registration filed on or after the date the notice of intent to publish issued.
§ 1.377 - for review of decision refusing to accept and record payment of a maintenance fee filed prior to expiration of a patent.
§ 1.550(c) - for patent owner requests for extension of time in ex parte reexamination proceedings.
§ 1.956 - for patent owner requests for extension of time in inter partes reexamination proceedings.
§ 5.12 - for expedited handling of a foreign filing license.
§ 5.15 - for changing the scope of a license.
§ 5.25 - for retroactive license.

**Petition Fees under 37 CFR 1.17(h): Fee $130 Fee Code 1464**
For petitions filed under:
§ 1.19(g) - to request documents in a form other than that provided in this part.
§ 1.84 - for accepting color drawings or photographs.
§ 1.91 - for entry of a model or exhibit.
§ 1.102(d) - to make an application special.
§ 1.138(c) - to expressly abandon an application to avoid publication.
§ 1.313 - to withdraw an application from issue.
§ 1.314 - to defer issuance of a patent.

Signature: Greg T. Warder — Date: 11/29/05

Typed or printed name: Greg T. Warder — Registration No., if applicable: 50,208

This collection of information is required by 37 CFR 1.17. The information is required to obtain or retain a benefit by the public which is to file (and by the USPTO to process) an application. Confidentiality is governed by 35 U.S.C. 122 and 37 CFR 1.11 and 1.14. This collection is estimated to take 5 minutes to complete, including gathering, preparing, and submitting the completed application form to the USPTO. Time will vary depending upon the individual case. Any comments on the amount of time you require to complete this form and/or suggestions for reducing this burden, should be sent to the Chief Information Officer, U.S. Patent and Trademark Office, U.S. Department of Commerce, P.O. Box 1450, Alexandria, VA 22313-1450. DO NOT SEND FEES OR COMPLETED FORMS TO THIS ADDRESS. SEND TO: **Commissioner for Patents, P.O. Box 1450, Alexandria, VA 22313-1450.**

*If you need assistance in completing the form, call 1-800-PTO-9199 and select option 2.*

American LegalNet, Inc.
www.USCourtForms.com

OIPE IAP79
JUL 0 9 2006
PATENT & TRADEMARK OFFICE

COPY

UNITED STATES PATENT AND TRADEMARK OFFICE

Commissioner for Patents
United States Patent and Trademark Office
P.O. Box 1450
Alexandria, VA 22313-1450
www.uspto.gov

OIPE IAP77
DEC 0 5 2005
PATENT & TRADEMARK OFFICE

Paper No. None

MANATT PHELPS AND PHILLIPS
ROBERT D. BECKER
1001 PAGE MILL ROAD, BUILDING 2
PALO ALTO CA 94304

COPY MAILED

OCT 0 3 2005

OFFICE OF PETITIONS

In re Application of
Karapet Ablabutyan and Parkev Krmoian
Application No. 10/954,697
Filed: September 29, 2004
Attorney Docket No. 23451-041
Title: WHEELCHAIR LIFT

DECISION ON PETITION
UNDER 37 C.F.R. §1.47(a)

This is in response to the petition under 37 C.F.R. §1.47(a)[1], filed July 7, 2005.

On September 29, 2004, the application was deposited. No oath or declaration was included on filing. On December 3, 2004, a "Notice to File Missing Parts of Nonprovisional Application – Filing Date Granted" (Notice) was mailed, indicating that a fully executed oath or declaration and the associated surcharge were required, along with replacement drawings. This Notice set a two-month period for reply.

With the present petition, Petitioner has submitted the petition fee, the associated surcharge, a statement of facts, and a declaration which has been signed by the first listed joint inventor. Petitioner has further included a five-month extension of time to make timely this response.

---

1 A grantable petition under 37 C.F.R. §1.47(a) requires:
(1) the petition fee of $130;
(2) a surcharge of either $65 or $130 if the petition is not filed at the time of filing the application, as set forth in 37 CFR § 1.16(e);
(3) a statement of the last known address of the non-signing inventors;
(4) either
a) proof that a copy of the entire application (specification, claims, drawings, and the oath or declaration) was sent or given to the non-signing inventor for review and proof that the non-signing inventor refuses to join in the application or
b) proof that the non-signing inventor cannot be found or reached after diligent effort;
(5) a declaration which complies with 37 CFR §1.63.

Petitioner has met requirements (1) – (3) and (5) of 37 C.F.R. §1.47(a).

Regarding the fourth requirement, the signing inventor has set forth that he went to the residence of the non-signing inventor in an attempt to secure his signature on this declaration. The signing inventor further sets forth that the non-signing inventor requested more time to review the application papers, however it is not evident if the non-signing inventor was ever presented with a complete copy of the same.

As such, it is not clear if a complete copy of the application was sent to the last known address of the non-signing inventor.

It follows that one cannot refuse to sign something which one has not been presented with. A refusal by an inventor to sign an oath or declaration when the inventor has not been presented with the application papers does not itself suggest that the inventor is refusing to join the application unless it is clear that the inventor understands exactly what he or she is being asked to sign and refuses to accept the application papers. It is reasonable to require that the inventor be presented with the application papers before a petition under 37 CFR §1.47 is granted since such a procedure ensures that the inventor is apprised of the application to which the oath or declaration is directed[2].

If a complete copy of the application was never provided to the non-signing inventor, Petitioner may wish to consider sending a complete copy of the application to the non-signing inventor and waiting an appropriate period of time before submitting any renewed petition, in order to provide him with the opportunity to respond.

As such, the petition must be **DISMISSED**.

Any reply must be submitted within **TWO (2) MONTHS** from the mail date of this decision. Extensions of time under 37 C.F.R. §1.136(a) are permitted. The reply should include a cover letter entitled "Renewed Petition Under 37 C.F.R. §1.47(a)." This is not a final agency action within the meaning of 5 U.S.C 704. The renewed petition should indicate in a prominent manner that the attorney handling this matter is Paul Shanoski. Any renewed petition may be submitted by mail[3], hand-delivery[4], or facsimile[5].

Telephone inquiries regarding *this decision* should be directed to the undersigned at (571) 272-3225. All other inquiries concerning examination procedures or status of the application should be directed to the Technology Center.

Paul Shanoski
Senior Attorney
Office of Petitions
United States Patent and Trademark Office

2 In re Gray, 115 USPQ 80 (Comm'r Pat. 1956).
3 Mail Stop Petition, Commissioner for Patents, United States Patent and Trademark Office, P.O. Box 1450, Alexandria, VA, 22313-1450.
4 Customer Window, Randolph Building, 401 Dulaney Street, Alexandria, VA, 22314.
5 (571) 273-8300- please note this is a central facsimile number.

manatt
manatt | phelps | phillips

Greg T. Warder
Manatt, Phelps & Phillips, LLP
Direct Dial: (650) 812-1321
E-mail: gwarder@manatt.com

OIPE IAP77
DEC 05 2005
PATENT & TRADEMARK OFFICE

November 10, 2005

Client-Matter: 23451-041

**VIA FEDERAL EXPRESS**

Parkev Krmoian
520 W. Elk Avenue #105
Glendale, CA 91204

**Re: US Application Entitled: WHEELCHAIR LIFT**
**Application No.: 10/954,697 Filed: 09/29/2004**
**Inventors: Karapet Ablabutyan, Parkev Krmoian**

Dear Mr. Krmoian:

Enclosed is a copy of the above-referenced application and drawings as filed on September 29, 2004. Please be aware that these documents are confidential and, as such, must not be shared with any third party. Also enclosed are a Declaration for Utility or Design Patent Application and an Assignment document for your signature.

Please review the application as filed and sign and date both the Declaration and Assignment where indicated. Thereafter, please return all the documents, including the copy of the application, in the Federal Express envelope enclosed herein for that purpose.

If you have any questions, please contact my assistant, Vicki Lorist (650-812-1325) or me.

Sincerely,

Greg T. Warder

GTW:vl

20146498.1

# WHEELCHAIR LIFT

Inventors: Karapet Ablabutyan and Parkev Krmoian

## CROSS-REFERENCE TO RELATED APPLICATIONS

This application is a continuation-in-part of U.S. Patent Application Serial No. 10/251,433 filed on September 20, 2002 entitled "Wheelchair Lift Device", which is a continuation of U.S. Patent Application Serial No. 09/675,318 filed on September 29, 2000 entitled "Wheelchair Lift Device", now U.S. Patent No. 6,461,097, each of which are incorporated by reference herein.

## FIELD OF THE INVENTION

The present invention is directed to a wheelchair lift. More specifically, the present invention is directed to a wheelchair lift with interlocks that promote proper operation. The present invention is also directed towards a wheelchair lift which requires a lower peak force for operation.

## BACKGROUND OF THE INVENTION

Wheelchair lifts raise and lower a wheelchair and/or passenger to and from vehicles. Wheelchair lifts are typically mounted in a doorway of a vehicle and have a platform that raises and lowers the wheelchair and/or passenger between the ground and the vehicle. A common wheelchair lift design is a parallelogram design which uses two sets of lift arms arranged in a parallelogram or near-parallelogram arrangement on either side of the platform.

Wheelchair lifts may cause injuries to people and damage to vehicles if not operated properly. For example, operating a wheelchair lift while the vehicle is in motion can be dangerous.

Wheelchair lifts may use hydraulic actuators to provide the lifting force to move the platform. In certain situations, the use of electric actuators may provide certain features which are desirable to wheelchair lifts. For example, electric actuators may provide variable speed control. However, an electric actuator of a given force rating will cost more than a hydraulic actuator of the same force rating.

What is needed is a wheelchair lift with interlocks that promote proper operation. What is also needed is a wheelchair lift which requires a lower peak force for operation, to permit the practical use of electric actuators.

## BRIEF DESCRIPTION OF THE DRAWINGS

FIGURE 1A shows one embodiment of a wheelchair lift in accordance with the present invention.

FIGURE 1B-1F show the wheelchair lift in a ground, intermediate, floor level, partially stowed, and fully stowed positions.

FIGURE 2 shows one embodiment of a remote control pendant that may be used with the wheelchair lift.

FIGURES 3A-3B show a prior art arm geometry for a wheelchair lift.

FIGURES 3C-3D show one embodiment of an arm geometry in accordance with the present invention.

FIGURE 3E shows a graph of actuator force required for a prior art arm geometry and an arm geometry in accordance with the present invention.

## DETAILED DESCRIPTION OF PREFERRED EMBODIMENTS OF THE INVENTION

FIGURE 1A shows one embodiment of a wheelchair lift 100 in accordance with the present invention. Wheelchair lift 100 includes an upper arm 114 and a lower arm 115 coupled to a frame 117 and a vertical arm 116. The points where upper arm 114 and lower arm 115 couple to frame 117 and vertical arm 116 may form the points of a parallelogram or a near-parallelogram. A lift actuator 118 is coupled to the point where upper arm 114 couples to vertical arm 116 and to the point where lower arm 115 couples to frame 117. Frame 117 is designed to be coupled to a vehicle, and may include a threshold plate 130.

Wheelchair lift 100 also includes a platform 111 coupled to vertical arm 116. Platform 111 is kept in a substantially level position by a platform stop 129 which rests against vertical arm 116. An inboard roll stop 126 and an outboard roll stop 119 are coupled to platform 111. A stow linkage is also coupled to platform 111, the stow linkage having an upper stow arm 140, a lower stow arm 141, and a roller 122. An inboard roll stop actuator 128 is coupled to inboard roll stop 126 and lower stow arm 141. A handrail 112 is coupled to upper section 141 of the stow linkage. A restraint belt 127 is attached to handrail 112. An outboard roll stop linkage 120 is coupled to outboard roll stop 119.

A logic module 200 provides several interlocks that promote the proper operation of wheelchair lift 100. Logic module 200 is described in greater detail below. A visual alarm 132 provides a visual alert when wheelchair lift 100 is in use. In a preferred embodiment, two visual alarms 132 are coupled to frame 117, or otherwise coupled directly to wheelchair lift 100. Audio alarms such as a siren or buzzer provide audible alerts that wheelchair lift 100 is in use, or if there is a condition preventing wheelchair lift 100 from being operated. A platform light 134 attached to vertical arm 116 illuminates platform 111 when wheelchair lift 100 is used in poor light conditions. In a preferred embodiment, two platform lights 134 are connected to each vertical arm 116, or otherwise coupled directly to wheelchair lift 100.

FIGURE 1B shows wheelchair lift 100 in a ground position. Platform 111 is near or at ground level. Outboard roll stop 119 is lowered when outboard roll stop linkage

120 contacts the ground, thus allowing the passenger to board platform 111. Inboard roll stop 126 is raised and prevents the passenger from traveling off platform 111.

FIGURE 1C shows wheelchair lift 100 in an intermediate position after it has begun to lift from the ground position. Outboard roll stop 119 is raised as outboard roll stop linkage 120 lifts off the ground and no longer contacts the ground, thus preventing the passenger from traveling off platform 111. Inboard roll stop 126 is still raised.

FIGURE 1D shows wheelchair lift 100 in a floor level position. Platform 111 is at the level of the vehicle. Inboard roll stop actuator 128 lowers inboard roll stop 126 and allows the passenger to board the vehicle. Outboard roll stop 119 is still raised.

FIGURE 1E shows wheelchair lift 100 as it is folding into a stowed position. Lift actuator 118 continues to raise upper arm 114 and lower arm 115. After platform 111 lifts a small distance, roller 122 begins to push against lower arm 115, and upper stow arm 140 and lower stow arm 141 straighten out and begin to raise platform 111 into a stowed position. Handrails 112 also begin to raise into a stowed position.

FIGURE 1F shows wheelchair lift 100 in the fully stowed position. Platform 111 is now in an upright position. Hooks or latches may prevent platform 111 from shaking or rattling while in the stowed position.

As mentioned above, logic module 200 provides several interlocks that promote the proper operation of wheelchair lift 100. Logic module 200 is capable of receiving feedback from various sensors located throughout wheelchair lift 100 and controlling the operation of wheelchair lift 100 accordingly. Logic module 200 is connected to sensors which detect the positions of platform 111, upper arm 114, lower arm 115, inboard roll stop 126, inboard roll stop actuator 128, outboard roll stop 119, and threshold pressure plate 130. These sensors may include ammeters, voltmeters, limit switches, weight sensors, optical sensors, ultrasound sensors, pressure mats, pressure switches, pressure transducers, and any other suitable sensors. Logic module 200 includes a microprocessor and software, and uses data from these sensors to control lift actuator 118 and inboard roll stop actuator 128. Logic module 200 may also detect faulty connections to lift actuator 118 and inboard roll stop actuator 128.

FIGURE 2A shows one embodiment of a control pendant 205 in accordance with the present invention. Control pendant 205 is connected to logic module 200, and

provides four functions which allow a user to operate wheelchair lift 100: UP, FOLD, UNFOLD, and DOWN. UP raises wheelchair lift 100 from the ground position to the floor level position. FOLD stows wheelchair lift 100 from the floor level position into the stowed position. UNFOLD unstows wheelchair lift 100 from the stowed position to the floor level position. DOWN lowers wheelchair lift from the floor level position to the ground position. Logic module 200 allows only the appropriate commands to performed, depending on the position of wheelchair lift 100. For example, in the ground position, only the UP command is available. Below the floor level position, only the UP and DOWN commands are available. In the floor level position, only the DOWN and FOLD commands are available. In the stowed position, only the UNFOLD command is available. The available command choices for a given position may be indicated by the user interface, for example, by illuminated buttons. Logic module 200 may stop wheelchair lift 100 if more than one button is pressed at a time on control pendant 205.

Logic module 200 is capable of sending an interlock signal to the vehicle which is capable of interacting with the vehicle to prevent forward and rearward movement of the vehicle when wheelchair lift 100 is not in the stowed position. Logic module 200 is also capable of preventing unstowing and/or operation of wheelchair lift 100 unless an interlock signal is received from the vehicle, indicating, for example, that the vehicle transmission is in the park position and the vehicle parking brake has been set. Logic module 200 is also capable of stopping wheelchair lift 100 if: wheelchair lift 100 is overloaded, platform 111 is occupied when a FOLD command is received, resistance is encountered when wheelchair lift 100 is being stowed, outboard roll stop 119 is lowered when platform 111 is more than three inches above the ground, restraint belt 127 is not fastened, and threshold plate 130 is occupied when platform 111 is below the floor level position.

Logic module 200 raises and lowers inboard roll stop 126 at the appropriate points during operation of wheelchair lift 100. Before platform 111 is lowered from the floor level position, logic module 200 raises inboard roll stop 126. After platform 111 is raised to the floor level position, logic module lowers inboard roll stop 126. Logic module 200 will check the position of inboard roll stop 126 or inboard roll stop actuator 128 and raise inboard roll stop 126 if necessary before moving platform 111, regardless

of the position of platform 111. This prevents inboard roll stop 126 from damaging the vehicle when inboard roll stop 126 is in a partially lowered position after repairs or any other reason while platform 111 is below the floor level position.

Outboard roll stop 119 may raise and lower without an actuator. In this case, logic module 200 may be connected to a separate ground sensor which indicates whether platform 111 is greater than, for example, three inches from the ground. Logic module 200 is capable of stopping platform 111 if outboard roll stop 119 is lowered when platform 111 is greater than, for example, three inches from the ground.

Logic module 200 is capable of preventing wheelchair lift 100 from being stowed when platform 111 is still occupied. As can be seen in FIGURE 1D, roller 122 does not yet contact lower arm 115 in the floor level position. A small gap is present between roller 122 and lower arm 115 in the floor level position. When a FOLD command is received, this small gap allows platform 111 to remain substantially level during the initial phase of the stowing operation. During this initial phase of the stowing operation, platform 111 is lifted through a small distance of, for example, one or two inches. This small lifting motion allows logic module 200 to detect weight on platform 111. In one embodiment, logic module 200 detects whether a pressure switch coupled to lift actuator 118 is triggered during this small lifting motion. In another embodiment, logic module 200 detects the amperage required by lift actuator 118 to perform this small lifting motion. If the pressure switch is triggered or an out-of-range amperage is detected, logic module 200 will stop platform 111. The amount of weight on platform 111 necessary to prevent a stowing operation may be set, for example, to 50 pounds. Because of the small initial lifting motion, the position of a weight on platform 111 does not affect this interlock. After a stowing operation is stopped because of a weight on platform 111, logic module 200 may automatically return platform 111 to the floor level position, or require the user to push the DOWN button and return platform 111 to the floor level position. This maintains the small gap between roller 122 and lower arm 115, and prevents the user from overriding this interlock by pressing the FOLD button repeatedly.

FIGURE 2B shows one embodiment of a hardware block diagram for a logic module 200 in accordance with the present invention. Logic module 200 includes a micro-controller 210 which receives commands 240 from the user through pendant 205.

Micro-controller 210 also receives analog inputs 220 and switch inputs 230. Micro-controller 210 may be capable of communicating with another computer through an interface 212.

BATTERY VOLTS indicates the vehicle battery charge level. Logic module 200 may display a low battery indicator when the vehicle battery charge level is below, for example, 12.4 volts. Logic module 200 may also prevent wheelchair lift 100 from being unstowed or lowered when the vehicle battery charge level is below, for example, 12.2 volts. PRESSURE indicates the pressure from lift actuator 118 in an embodiment where lift actuator 118 is a hydraulic cylinder. BUS INTERLOCK is an indicator from the vehicle to logic module 200 that wheelchair lift 100 can be operated. For example, BUS INTERLOCK may indicate that the vehicle transmission is in the park setting and that the vehicle parking brake has been set. LIFT INTERLOCK is an indicator from logic module 200 to the vehicle that the vehicle can be operated. For example, LIFT INTERLOCK may indicate that wheelchair lift 100 is fully stowed.

STOW SWITCH indicates whether wheelchair lift 100 is in the fully stowed position. STOW SWITCH may be a sensor that detects the position of upper arm 114 and/or lower arm 115. LOWERING SWITCH indicates whether platform 111 is at or below the floor level position. LOWERING SWITCH may be a sensor that detects the position of upper arm 114 and/or lower arm 115. PRESSURE SWITCH indicates whether there is a weight on platform 111 before platform 111 can be stowed. PRESSURE SWITCH may be a pressure switch connected to lift actuator 118 and may be set, for example, to 50 pounds. OUTBOARD SWITCH indicates whether outboard roll stop 119 is raised. BELT SWITCH indicates whether restraint belt 127 has been fastened. FOLDING SWITCH indicates whether platform 111 is above the floor level position. MAT SWITCH indicates whether threshold plate 130 is occupied. GROUND SWITCH indicates whether wheelchair lift 100 is in the ground position. EXTRA SWITCH is reserved for other features or interlocks.

RAISE will raise platform 111. If lift actuator 118 is a hydraulic actuator, logic module 200 will turn on the pump motor for lift actuator 118. LOWER will lower platform 111. If lift actuator 118 is a hydraulic actuator, logic module 200 will open the hydraulic valve for lift actuator 118. FOLD will stow platform 111. If lift actuator 118 is

a hydraulic actuator, logic module 200 will turn on the pump motor for lift actuator 118 in series with a resistor to provide a slower rate of motion. UNFOLD will unstow platform 111. If lift actuator 118 is a hydraulic actuator, logic module 200 will open the hydraulic valve for lift actuator 118. BEACON LIGHTS will turn on visual alarm 132 while wheelchair lift 100 is in operation. AUDIO BUZZER will turn on audio alarms while wheelchair lift 100 is in operation and/or if an interlock stops wheelchair lift 100. PLATFORM LIGHTS will turn on platform lights 134 while wheelchair lift 100 is at or below the floor level position. UNLATCH will unlatch hooks which hold wheelchair lift 100 in the stowed position. ACTUATOR+ will raise inboard roll stop 126, while ACTUATOR- will lower inboard roll stop 126.

When a command 240 is received from the user, micro-controller 210 first looks at the state of analog inputs 220 and switch inputs 230 to check that all conditions have been satisfied for the particular command. Only after all the proper conditions have been satisfied for the particular command, will micro-controller 210 send the proper output signals 250 to effect the command. For example, when an UP command is received from the user, micro-controller 210 will first check the inputs to see: (1) whether BUS INTERLOCK indicates that operate wheelchair lift 100 can be operated, (2) whether BATTERY VOLTS indicates there is sufficient battery voltage from the vehicle battery, (3) whether OUTBOARD SWITCH indicates that outboard roll stop 119 is raised when platform 111 is greater than, for example, three inches above the ground, (4) whether inboard roll stop 126 is raised by sending a signal to inboard roll stop actuator 128, (5) whether BELT SWITCH indicates that restraint belt 127 is fastened, and (6) whether MAT SWITCH indicates that threshold plate 130 is not occupied. Only after these conditions for an UP command are satisfied, will micro-controller 210 send the suitable signals that make up an UP command. For example, an UP command may include: (1) turning on BEACON LIGHTS, (2) turning on AUDIO BUZZER, (3) turning on PLATFORM LIGHTS, (4) sending a RAISE output to cause lift actuators 118 to raise platform 111 to the floor level position, (5) sending an ACTUATOR- output to lower inboard roll stop 126, and (6) turning off AUDIO BUZZER.

Logic module 200 may also be programmed to provide additional features which enhance the operation of wheelchair lift 100. For example, where lift actuators 118 are

hydraulic actuators, logic module 200 may be programmed to run the pump motors for lift actuators 118 for a small additional period of time after wheelchair lift 100 is fully stowed. This has the effect of pressurizing lift actuators 118 and minimizing or preventing rattling of wheelchair lift 100 in the stowed position. Logic module 200 may also be programmed to pressurize hydraulic actuators at certain time intervals or upon certain events to keep lift actuators 118 pressurized when wheelchair lift 100 is not being used. For example, logic module 200 may pressurize hydraulic actuators every time the vehicle is started, or use pressure sensor feedback to pressurize hydraulic actuators when the pressure has dropped below a certain value.

Logic module 200 may be programmed to shut off wheelchair lift 100 if an out-of-range voltage is detected, thus acting as a programmable fuse to prevent damage to wheelchair lift 100.

Logic module 200 is capable of preventing wheelchair lift 100 from being operated when the vehicle battery charge level has dropped too low to prevent the vehicle battery from being drained to a point where the vehicle cannot start.

Logic module 200 is capable of recording the number of lift cycles and stow cycles. The definition of a lift cycle and a stow cycles may be changed as needed. For example, a lift cycle may be defined as one full trip from the ground position to the floor level position, regardless of how far platform 111 has actually traveled. Logic module 200 may also be capable of calculating the total amount of work performed by wheelchair lift 100, given the distance traveled by platform 111 and the weight carried.

Logic module 200 includes a visual display 260 for displaying a variety information. Visual display 260 may be an LCD display or any other suitable display. Visual display 260 may assist the user in operation of wheelchair lift 100 by providing instructions, indicating the current command being performed, indicating the current status of wheelchair lift 100, highlighting conditions that must be satisfied before wheelchair lift 100 can be operated, and suggesting certain actions such as starting the engine to recharge the battery. Visual display 260 may assist in the maintenance of wheelchair lift 100 by displaying the number of lift cycles and stow cycles and suggesting maintenance to be performed. Visual display 260 may assist in diagnostics and troubleshooting by, for example, indicating the vehicle battery charge level,

indicating temperatures of motors or pumps, and displaying error messages. Visual display 260 may be used during manufacturing, assembly, and maintenance of wheelchair lift 100 to aid in adjustment and calibration of the various components of wheelchair lift 100.

Wheelchair lift 100 may include a battery backup system. The battery backup system allows wheelchair lift 100 to be operated when other sources of power are not available or have failed. The battery backup system exists in addition to a manual backup system, which may include a hand crank, hand pump, or other manually operated devices for operating wheelchair lift 100.

Lift actuator 118 may be a hydraulic actuator or an electrical actuator. Electrical actuators include screw drives, rack and pinion drives, and other actuators such as Electrak® ball bearing screw drives manufactured by Danaher Motion Linear Products, Marengo, Illinois. The use of electrical actuators allow for variable speed control of the raising and lowering of wheelchair lift 100. Electrical actuators may reduce the number of external sensors needed to determine the position of wheelchair lift 100 by providing feedback from sensors such as integrated potentiometers or optical sensors. The electrical characteristics of electrical actuators may be used to implement interlocks. For example, an out-of-range voltage detected from electrical actuators while platform 111 is being lowered may indicate that an object is obstructing platform 111 from lowering, thus acting as an anti-crushing feature. An out-of-range voltage may also indicate that platform 111 has reached the ground, thus acting as an anti-jacking feature. As another example, an out-of-range voltage detected from electrical actuators while platform 111 is at floor level and while stowing of platform 111 is being attempted may indicate that platform 111 is still occupied, thus acting as an occupied platform interlock. Electrical actuators also allow for control of the wheelchair lift during lowering, instead of relying on the "gravity down" operation of hydraulic actuators. Electrical actuators may also allow wheelchair lift 100 to be held tightly in the stowed position without unstowing, rattling, or shaking. Electrical actuators also provide consistent performance over temperature changes and do not leak.

FIGURES 3A-3B show a prior art arm geometry for a wheelchair lift. The prior art geometry is a parallelogram design.

FIGURES 3C-3D show one embodiment of an arm geometry in accordance with the present invention. Upper arm 114 and lower arm 115 couple to frame 117 at two points that are farther apart than in the prior art geometry. In addition, the two points are located along a steeper angle than in the prior art geometry.

This lift arm geometry reduces the distance between the point where upper arm 114 couples to frame 117 and to the point where lower arm 115 couples to vertical arm 116 as the lift arms are passing through a horizontal position.

This lift arm geometry reduces the peak force needed from lift actuator 118. The reduced peak force required makes this lift arm geometry suitable for use with electrical actuators, which may not be able to generate as much force as hydraulic actuators of comparable cost. However, hydraulic actuators may still be used and benefit similarly from this lift arm geometry.

FIGURE 3E shows a graph of actuator force required for the prior art arm geometry and an arm geometry in accordance with the present invention. As can be seen, the prior art arm geometry requires an actuator force of more than 2000 pounds when its platform has reached the floor level position. An arm geometry in accordance with the present invention requires an actuator force of less than 1200 pounds when its platform has reached the floor level position, with the maximum force during the lifting of the platform not exceeding 1300 pounds.

Although the above examples have described wheelchair lift 100 in the context of carrying a wheelchair and/or a passenger, wheelchair lift 100 may be used in other applications. Wheelchair lift 100 may be used in the same or modified form to be attached to different parts of a vehicle and to carry other types of payloads.

While the invention is described in terms of some specific examples and embodiments, it will be clear that this invention is not limited to these specific examples and embodiments and that many changes and modified embodiments will be obvious to those skilled in the art without departing from the true spirit and scope of the invention.

## CLAIMS

What is claimed is:

1. A wheelchair lift for raising and lowering a passenger between a ground and a bed of a vehicle, the wheelchair lift comprising:

a platform capable of stowing into a stowed position;

a sensor; and

a logic module coupled to the platform and the sensor, the logic module capable of using data from the sensor to provide an interlock that promotes the proper operation of the wheelchair lift.

2. The wheelchair lift of claim 1, wherein the logic module prevents forward and rearward movement of the vehicle when the wheelchair lift is not in the stowed position.

3. The wheelchair lift of claim 1, wherein the logic module prevents unstowing of the wheelchair lift if a transmission of the vehicle is not set in a park position and a parking brake of the vehicle has not been set.

4. The wheelchair lift of claim 1, wherein the logic module stops the wheelchair lift if the platform is overloaded.

5. The wheelchair lift of claim 1, wherein the logic module stops stowing of the wheelchair lift if the platform is occupied.

6. The wheelchair lift of claim 1, wherein the logic module stops stowing of the wheelchair lift if resistance is encountered while the wheelchair lift is being stowed.

7. The wheelchair lift of claim 1, wherein the logic module stops the wheelchair lift if an outboard roll stop is not fully raised when the platform is more than three inches above the ground.

8. The wheelchair lift of claim 1, wherein the logic module prevents the wheelchair lift from being operated if a restraint belt is not fastened but will not stop the wheelchair lift if the restraint belt is unfastened once the wheelchair lift has started to operate.

9. The wheelchair lift of claim 1, wherein the logic module stops the wheelchair lift when a threshold plate between the platform and the vehicle is occupied.

10. The wheelchair lift of claim 9, wherein the wheelchair lift will not automatically start again when the threshold plate becomes unoccupied.

11. The wheelchair lift of claim 1, wherein the logic module prevents the platform from being raised or lowered unless an inboard roll stop is fully raised.

12. The wheelchair lift of claim 1, wherein the logic module prevents the platform from being raised or lowered unless an inboard roll stop and an outboard roll stop are fully raised.

13. The wheelchair lift of claim 1, further including a plurality of visual alarms coupled to the wheelchair lift.

14. The wheelchair lift of claim 1, wherein the logic module stops the wheelchair lift if the logic module receives more than one command at a time from a user.

15. The wheelchair lift of claim 1, wherein the logic module is capable of displaying an error message when the proper conditions are not met.

16. A wheelchair lift for raising and lowering a passenger to and from a vehicle, the wheelchair lift comprising:

a platform capable of stowing into a stowed position;

sensor means; and

logic means coupled to the platform and the sensor means, the logic means capable of using data from the sensor means to provide an interlock which promotes the proper operation of the wheelchair lift.

17. A wheelchair lift capable of stowing from a floor level position into a stowed position, the wheelchair lift comprising:

a platform;

a lift linkage coupled to the platform; and

a stow linkage coupled to the platform and the lift linkage;

wherein when a command is received from a user to stow the wheelchair lift from the floor level position into the stowed position, the lift linkage and the stow linkage allow the platform to be lifted a short distance while the platform is maintained in a substantially level orientation;

wherein the platform stops if a weight exceeding a predetermined threshold is detected on the platform while the platform is being lifted the short distance.

18. The wheelchair lift of claim 17, wherein the short distance is 1-2 inches.

19. The wheelchair lift of claim 17, wherein the predetermined threshold in 50 pounds.

20. A method for preventing a wheelchair lift from stowing from a floor level position into a stowed position if a platform of the wheelchair lift is occupied, the method comprising:

receiving a command from a user to stow the wheelchair lift from the floor level position into the stowed position;

using an actuator coupled to the platform to lift the platform a small distance from the floor level position while maintaining the platform in a substantially level orientation;

receiving data from a sensor coupled to the actuator to detect a weight on the platform while actuating the actuator to lift the platform the small distance; and

stopping the platform if the weight exceeds a predetermined threshold.

21. The method of claim 20, wherein the actuator is a hydraulic actuator including a hydraulic pump.

22. The method of claim 21, wherein the sensor is a pressure switch coupled to the hydraulic pump.

23. The method of claim 21, wherein the sensor is a pressure transducer coupled to the hydraulic pump.

24. The method of claim 20, wherein the short distance is 1-2 inches.

25. The method of claim 20, wherein the predetermined threshold is 50 pounds.

26. A wheelchair lift having a floor level position and a ground position, the wheelchair lift comprising:

a platform;

an inboard roll stop coupled to an inboard end of the platform; and

an actuator coupled to the inboard roll stop, the actuator capable of raising and lowering the inboard roll stop, wherein the actuator fully raises the inboard roll stop before the platform leaves the floor level position to travel to the ground position.

27. The wheelchair lift of claim 26, wherein if the platform stops between the floor level position and the ground position, the actuator fully raises the inboard roll stop before the platform begins to travel.

28. A method of preventing a passenger from traveling off a platform of a wheelchair lift, the wheelchair lift having a floor level position and a ground position, the method comprising:

providing an inboard roll stop having a lowered position and a raised position, the inboard roll stop in the lowered position capable of acting as bridge between the platform and a vehicle, the inboard roll stop in the raised position capable of preventing a passenger from traveling past an inboard end of the platform;

providing an actuator coupled to the inboard roll stop, the actuator capable of lowering and raising the inboard roll stop; and

using the actuator to raise the inboard roll stop to the raised position before the platform leaves the floor level position to travel to the ground position.

29. The method of claim 28, further comprising:

using the actuator to check the position of the inboard roll stop if the platform is stopped between the floor level position and the ground position; and

if the inboard roll stop is not in the raised position, using the actuator to raise the inboard roll stop to the raised position before the platform travels.

30. A wheelchair lift, comprising:

a lift linkage;

a vertical arm coupled to the lift linkage;

a platform coupled to the vertical arm; and

a light coupled to the vertical arm, wherein the light is capable of illuminating the platform.

31. A wheelchair lift, comprising:

a lift linkage;

a vertical arm coupled to the lift linkage;

a platform coupled to the vertical arm; and

a light coupled to the platform, wherein the light is capable of illuminating the platform.

# WHEELCHAIR LIFT

## ABSTRACT

A wheelchair lift having a logic module which provides several interlocks that promote proper operation is described. Also, a wheelchair lift having an arm geometry which requires a lower peak force for operation is described.

20146512.1

OIPE
DEC 05 2005
PATENT & TRADEMARK OFFICE

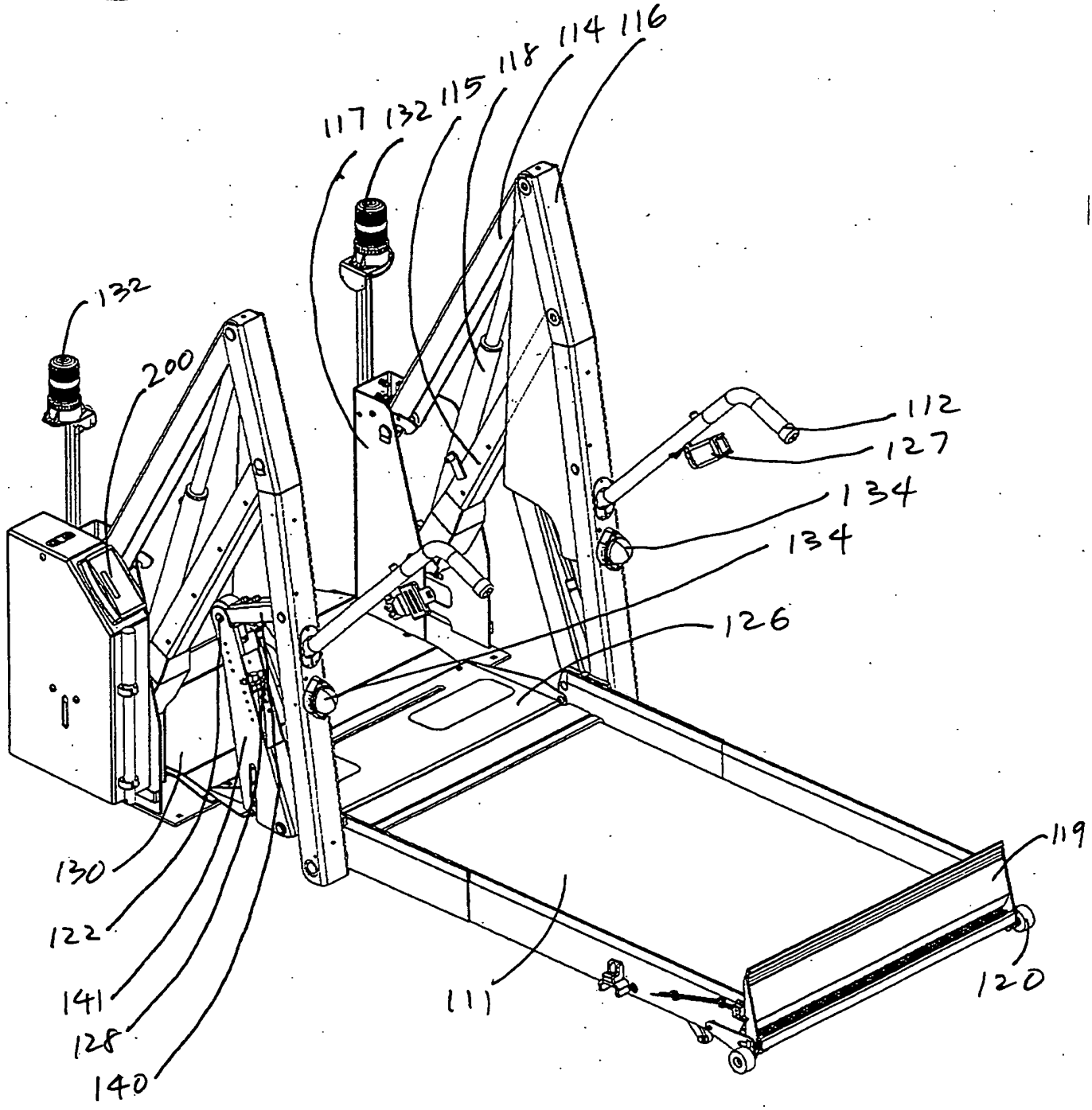


FIGURE 1A

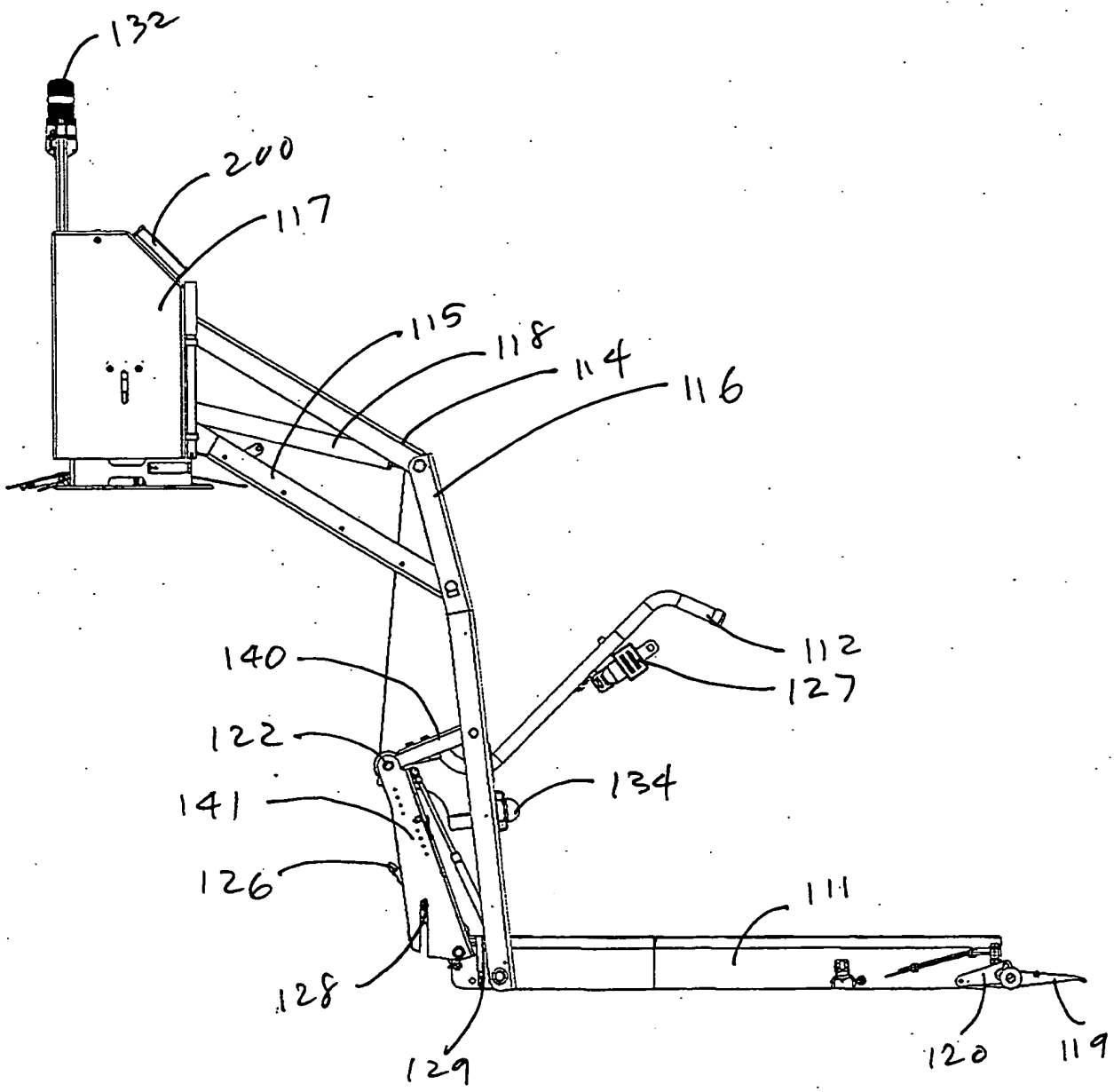
132
200
117
115
118
114
116
112
127
140
122
134
141
126
111
128
129
120
119

FIGURE 1B

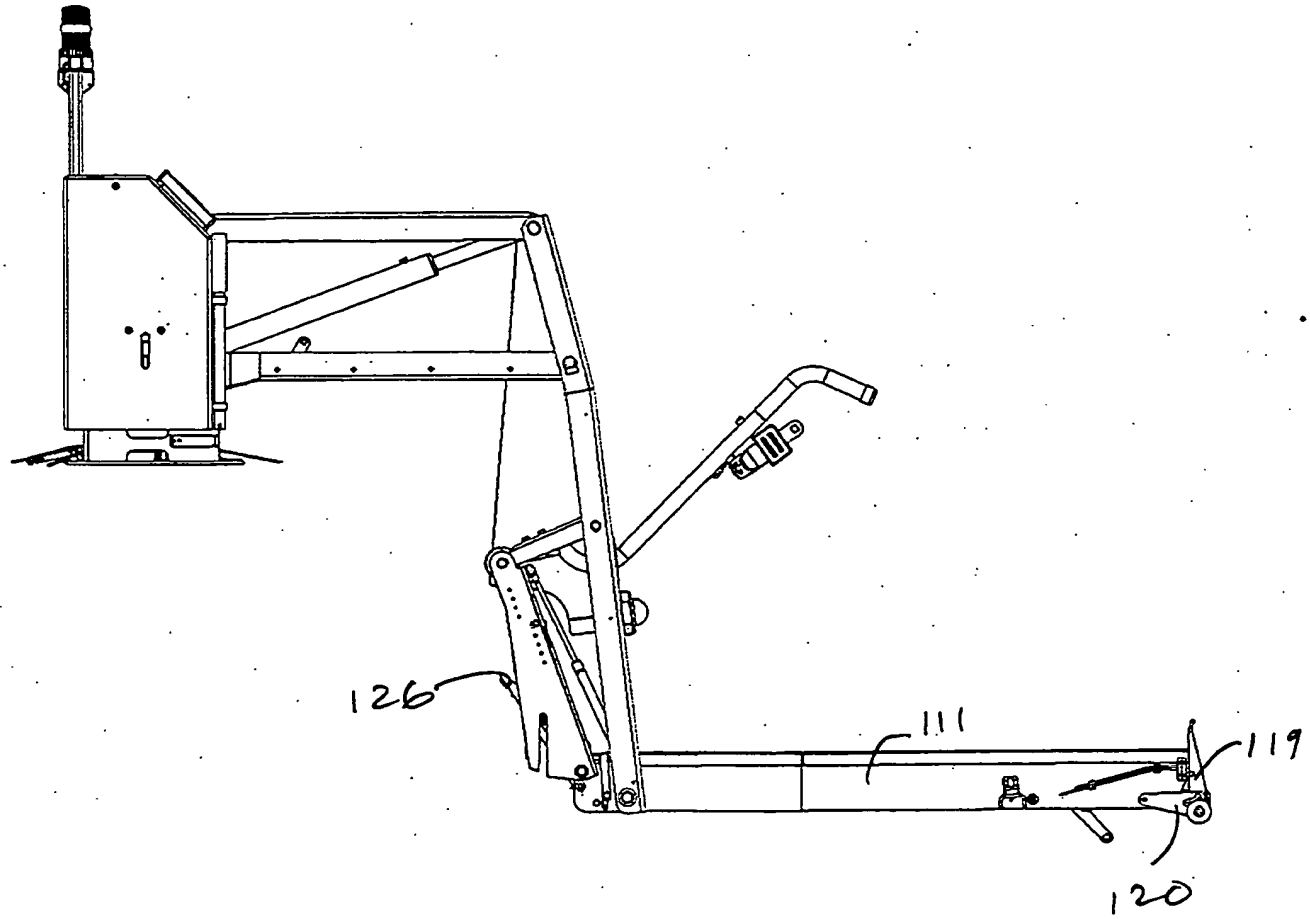


FIGURE 1C

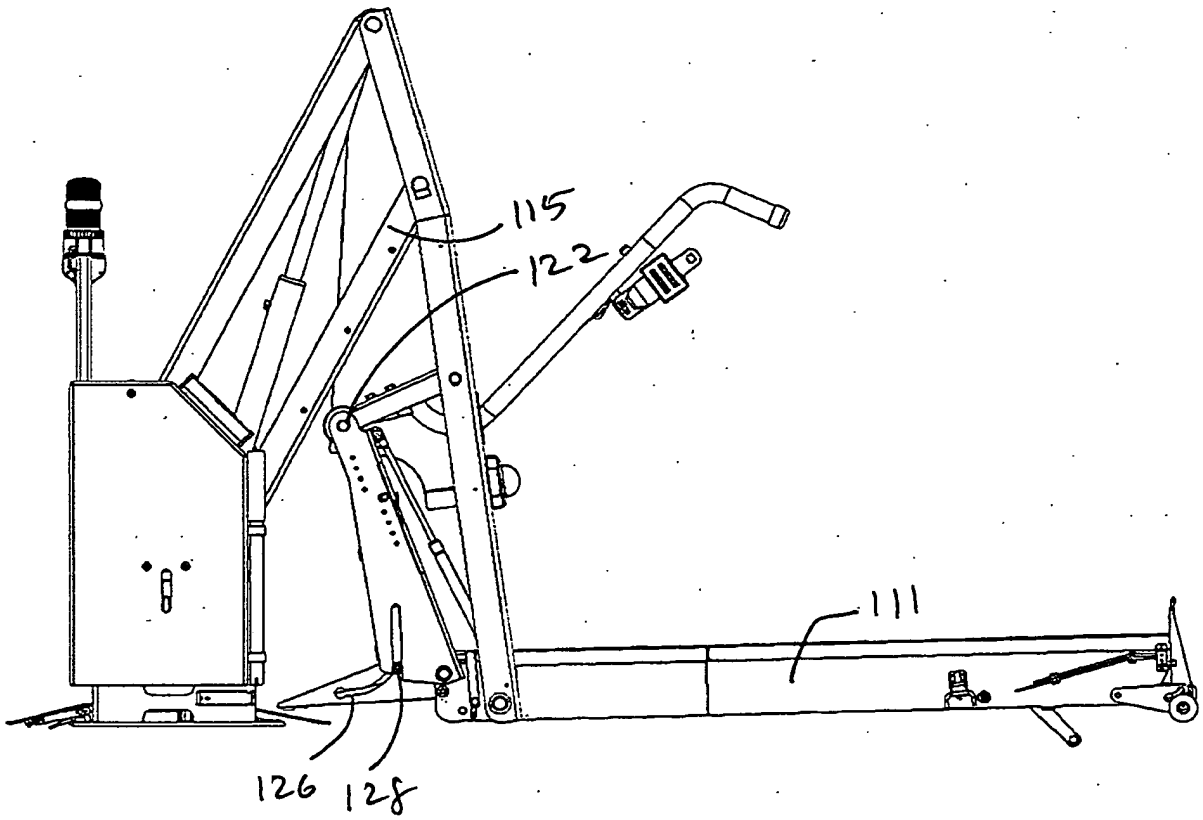


FIGURE 1D

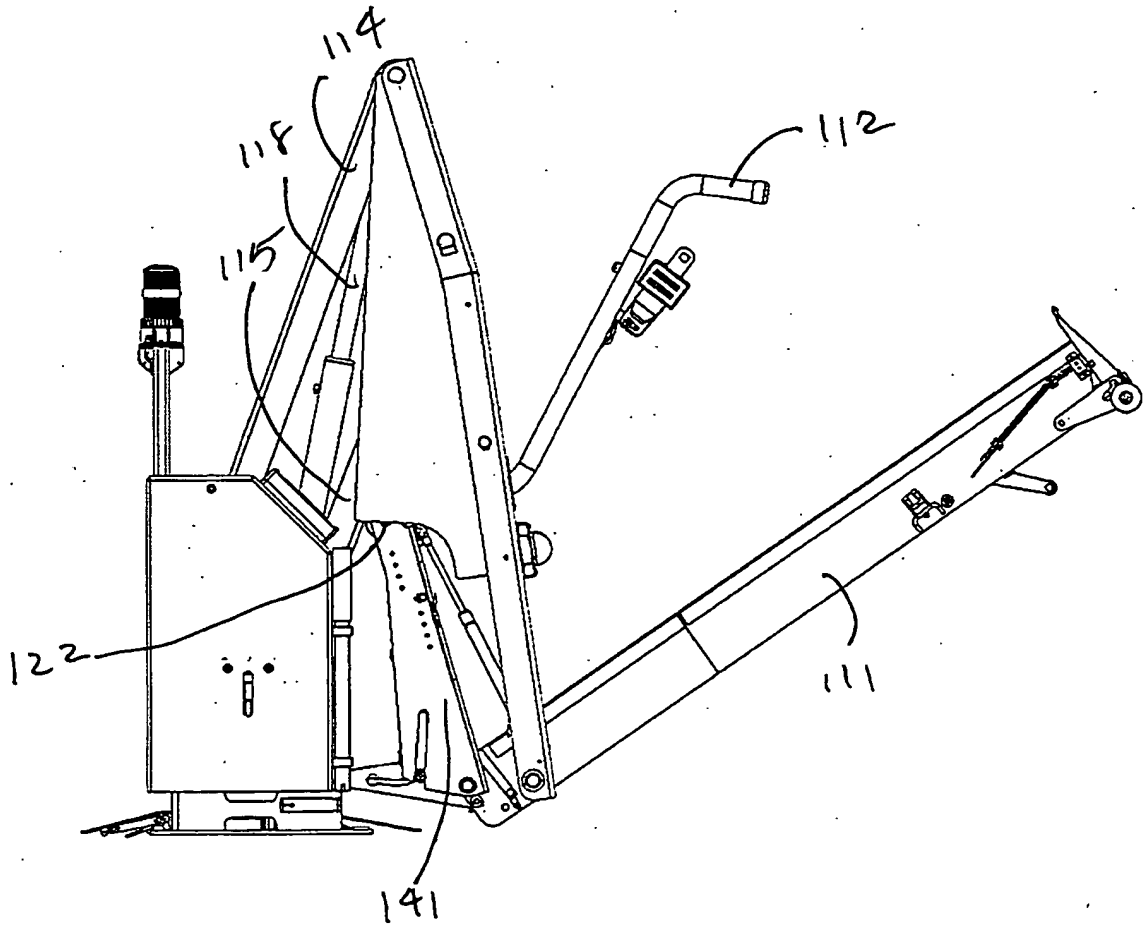


FIGURE 1E

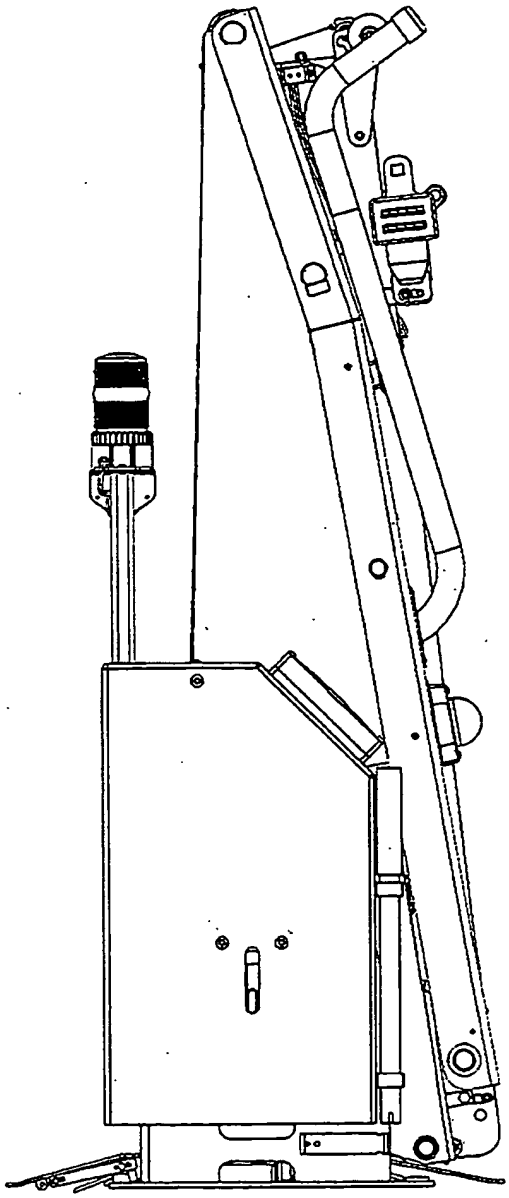

FIGURE 1F

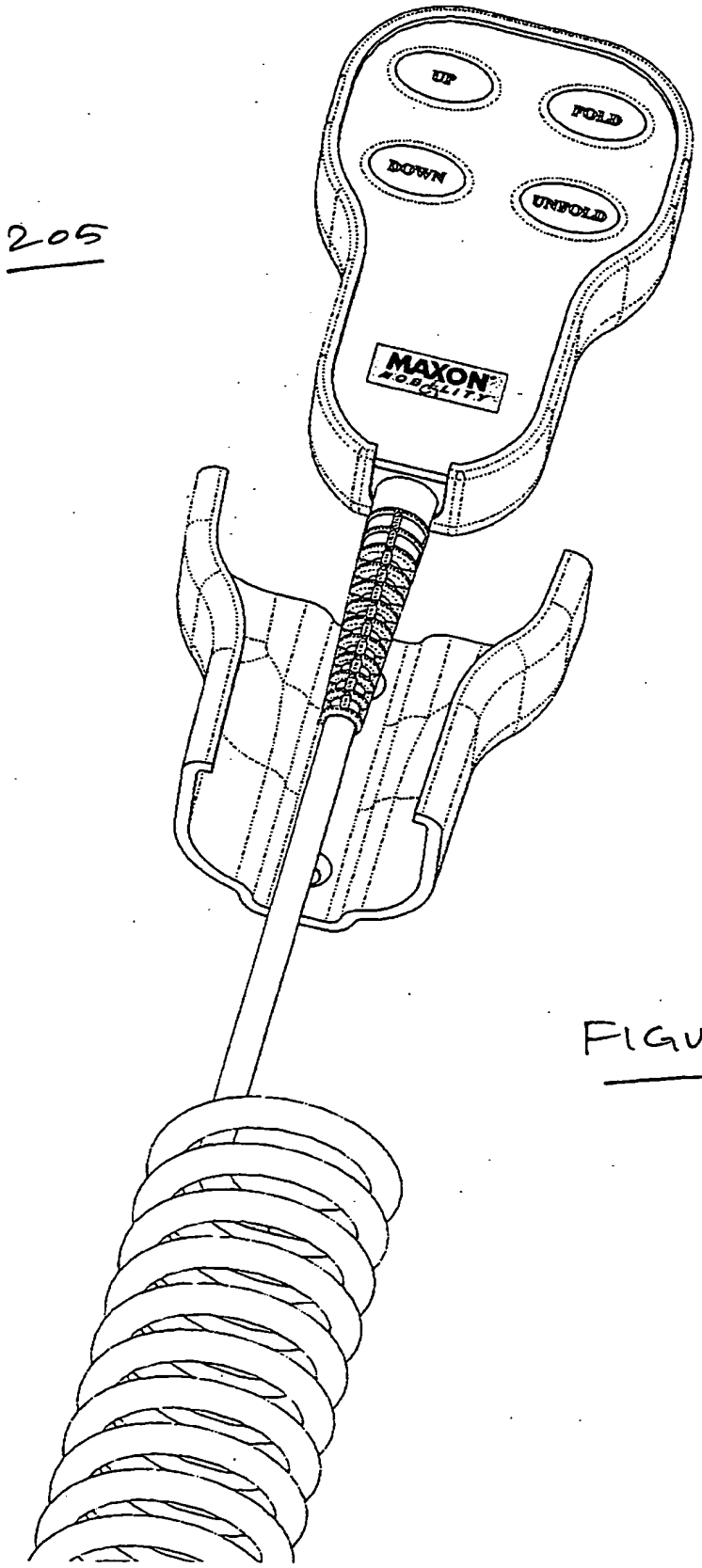


FIGURE 2A

200

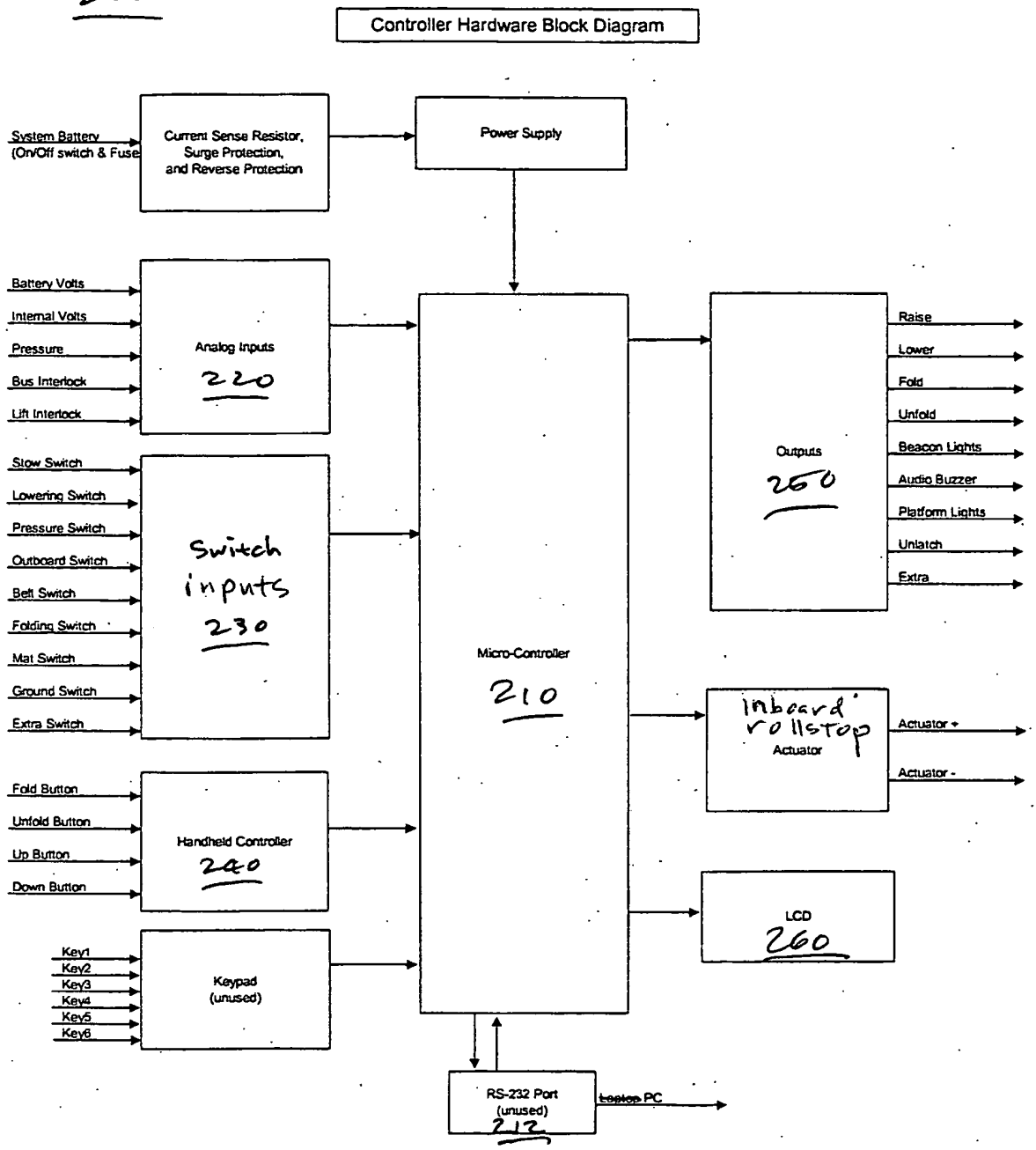


FIGURE 2B

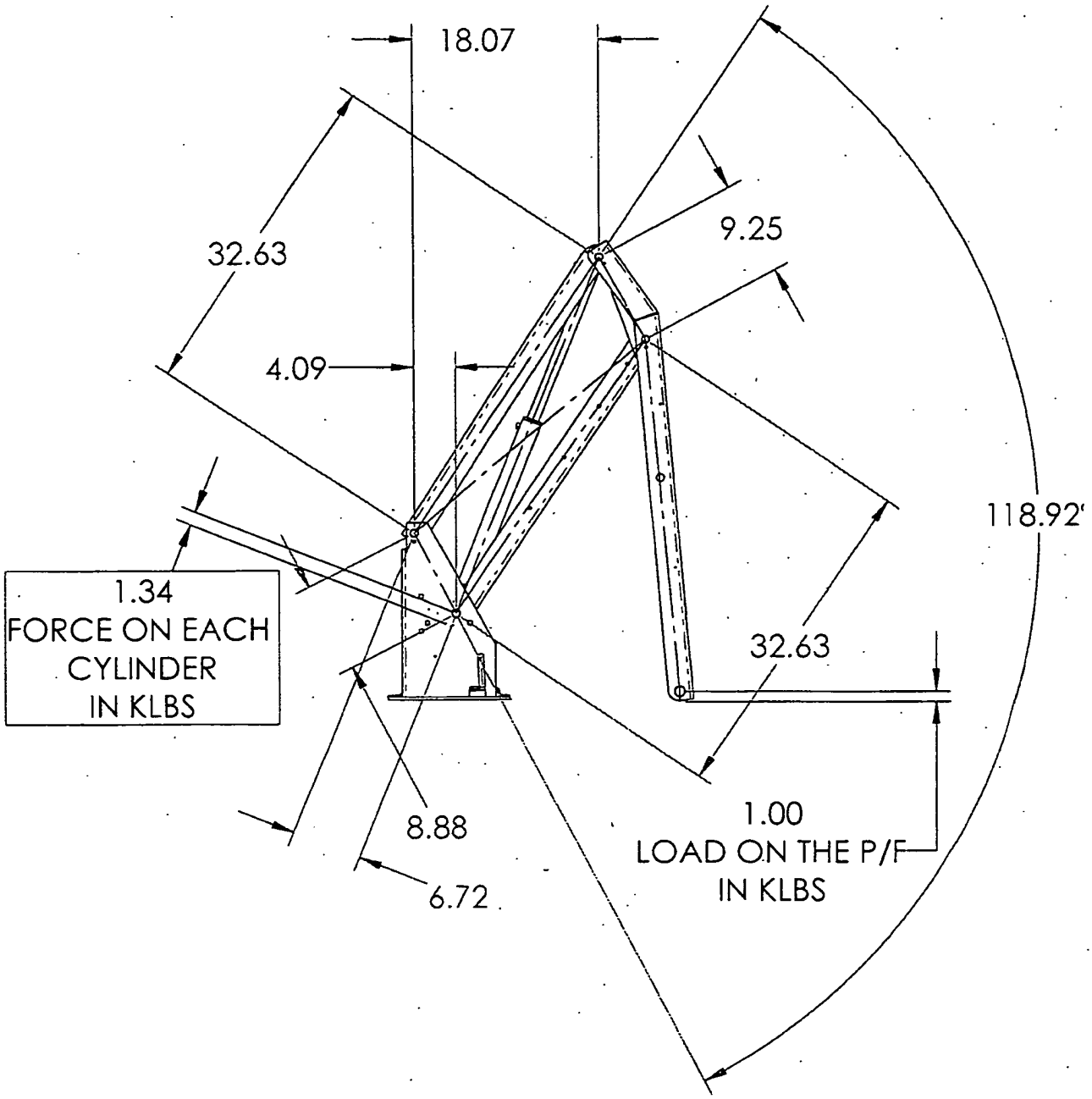


FIGURE 3A

PRIOR ART

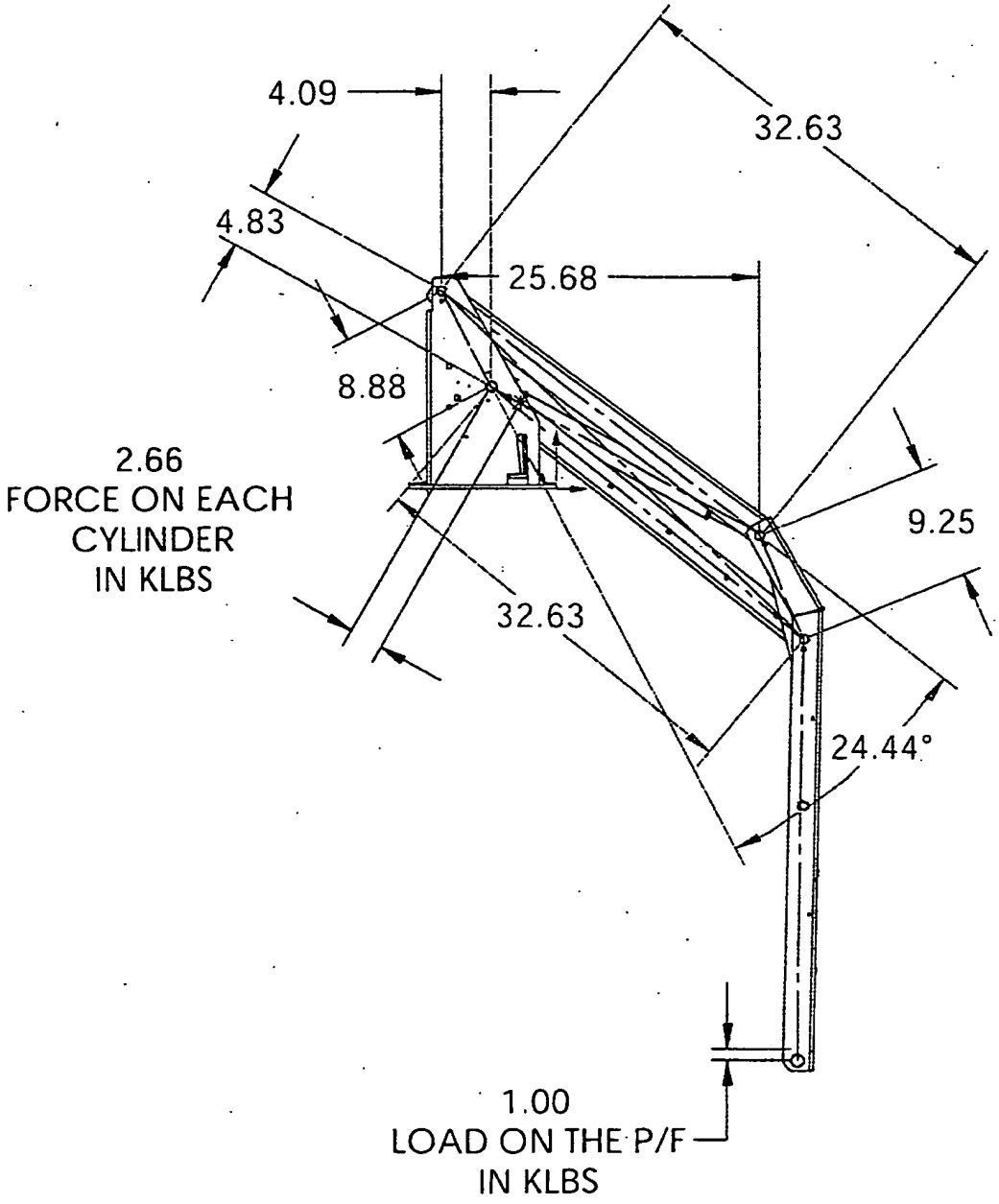


FIGURE 3B

PRIOR ART

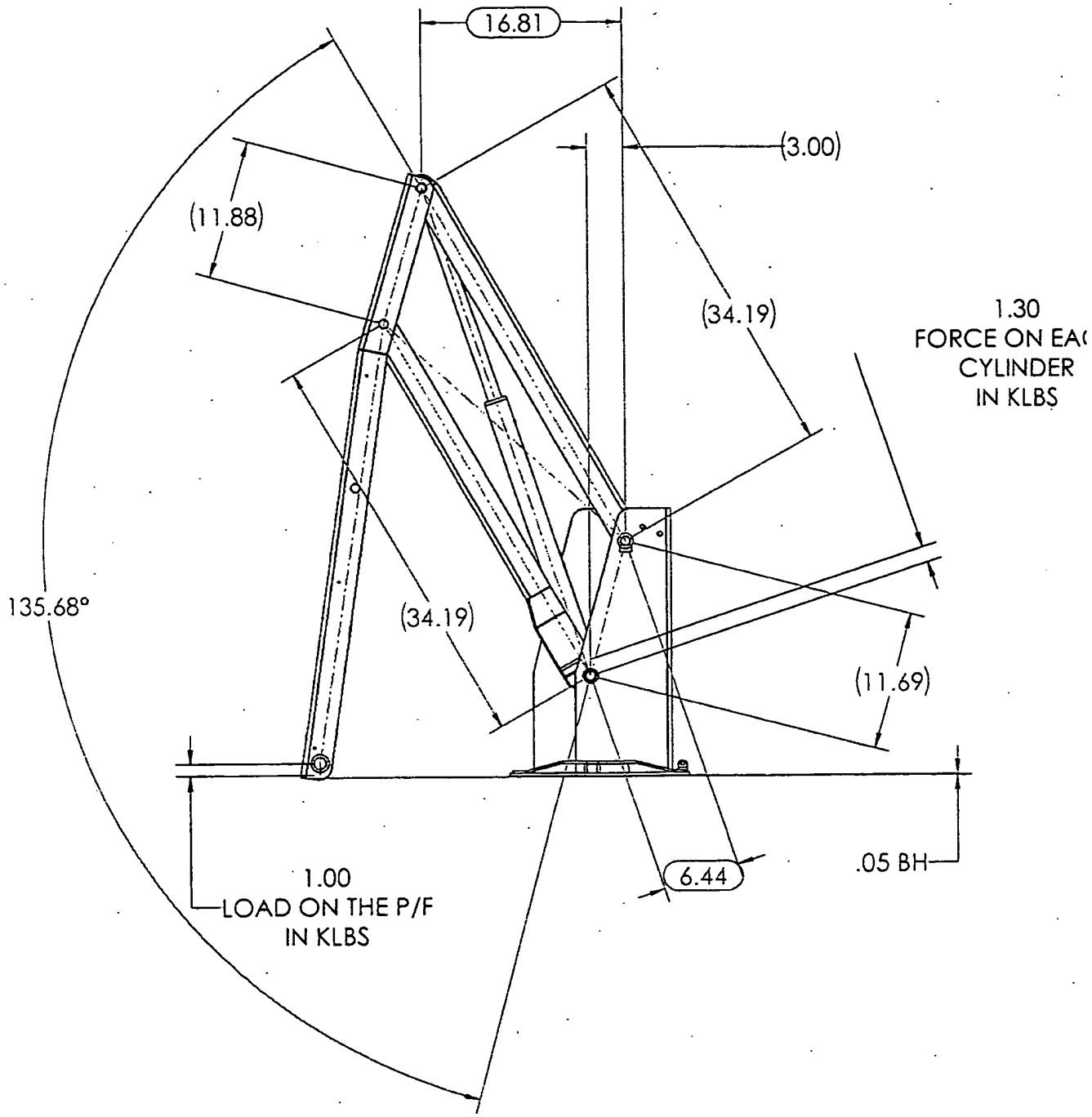
16.81
(3.00)
(11.88)
(34.19)
1.30
FORCE ON EA
CYLINDER
IN KLBS
135.68°
(34.19)
(11.69)
6.44
.05 BH
1.00
LOAD ON THE P/F
IN KLBS

FIGURE 3C

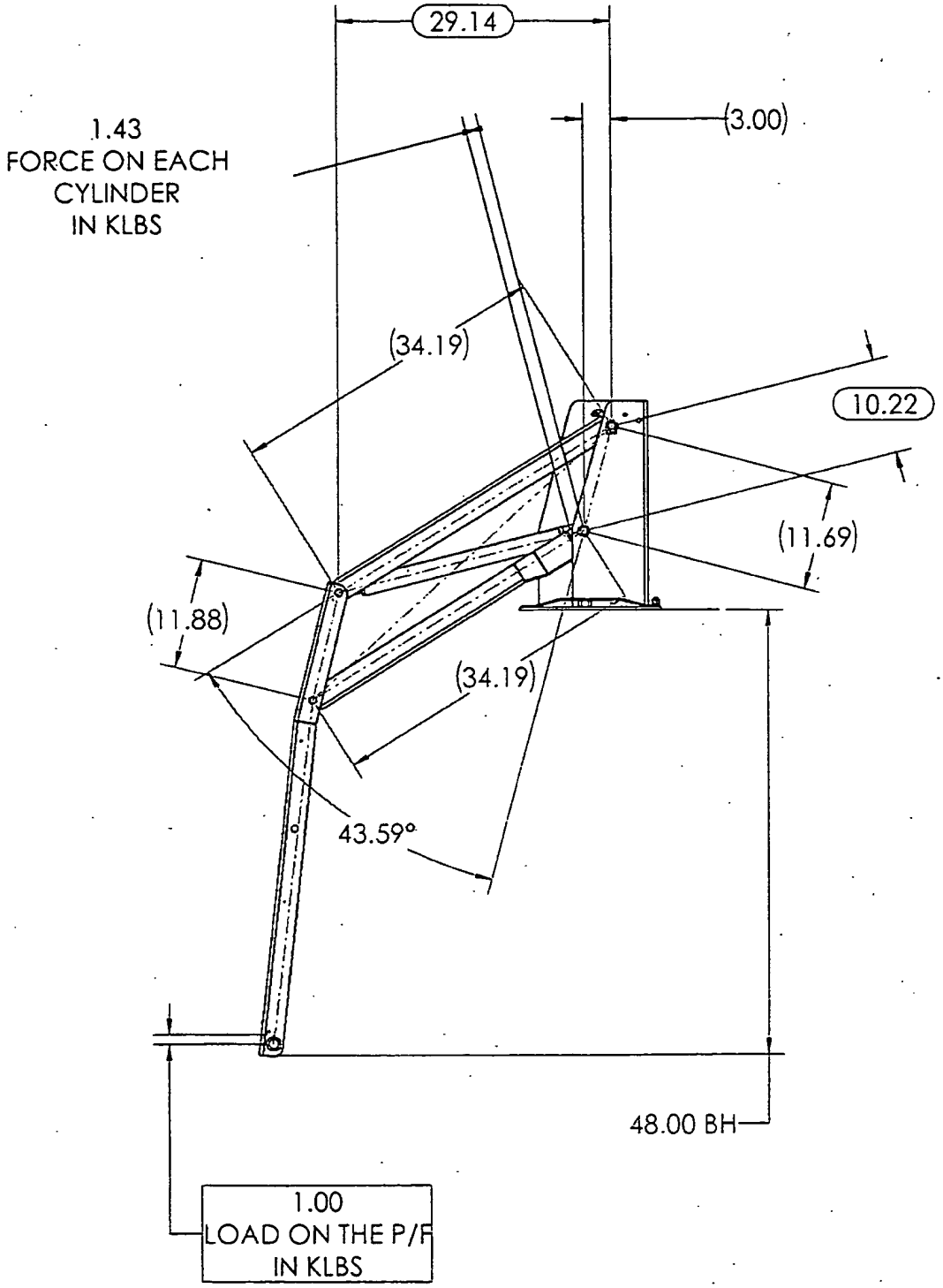
29.14
(3.00)
1.43
FORCE ON EACH
CYLINDER
IN KLBS
(34.19)
10.22
(11.69)
(11.88)
(34.19)
43.59°
48.00 BH
1.00
LOAD ON THE P/F
IN KLBS

FIGURE 3D

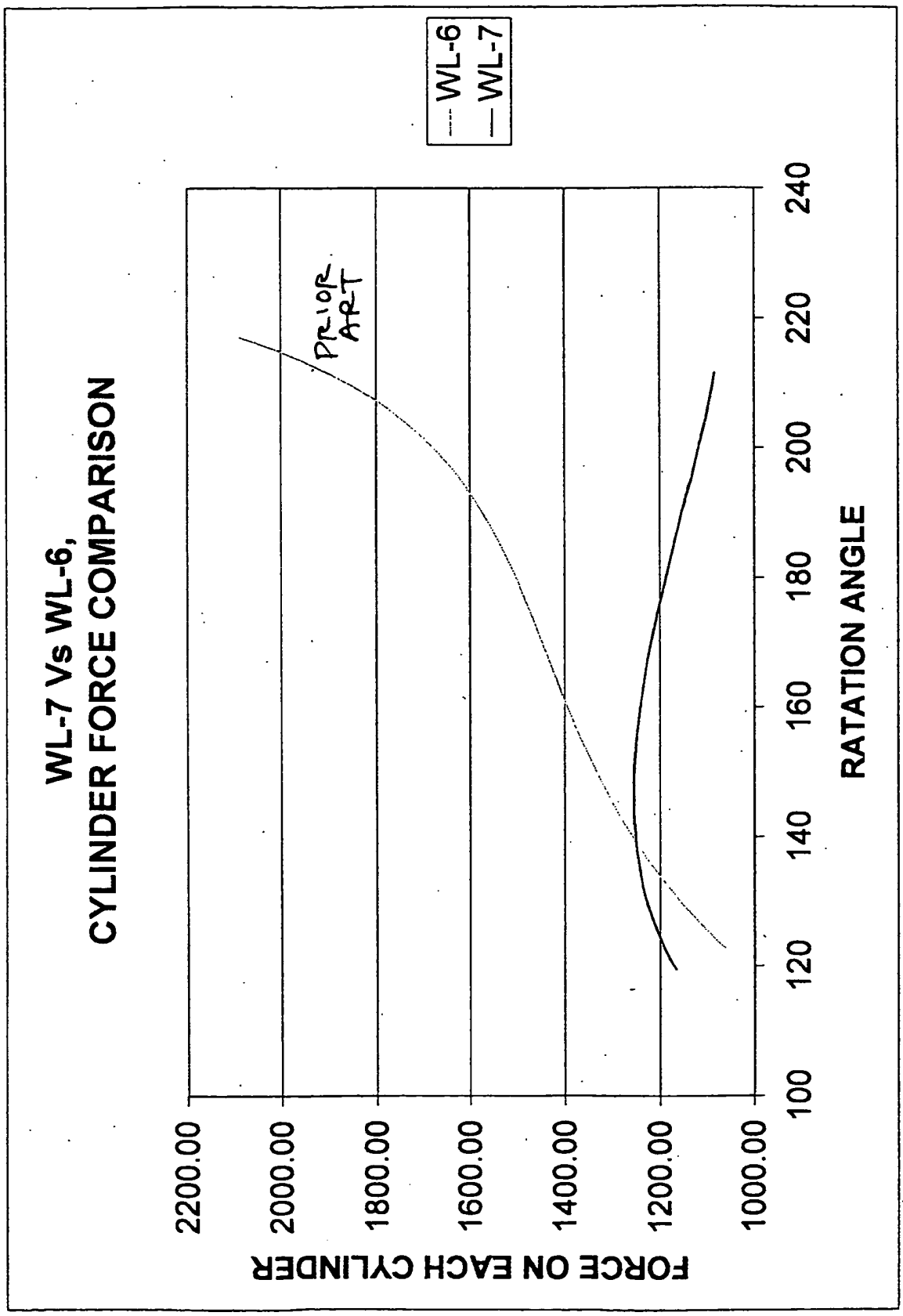
WL-7 Vs WL-6,
CYLINDER FORCE COMPARISON
WL-6
WL-7
PRIOR ART
FORCE ON EACH CYLINDER
2200.00
2000.00
1800.00
1600.00
1400.00
1200.00
1000.00
100
120
140
160
180
200
220
240
RATATION ANGLE

FIGURE 3E

OIPE
DEC 05 2005
PATENT & TRADEMARK OFFICE

PTO/SB/01 (09-04)
Approved for use through 07/31/2006. OMB 0651-0032
U.S. Patent and Trademark Office; U.S. DEPARTMENT OF COMMERCE
Under the Paperwork Reduction Act of 1995, no persons are required to respond to a collection of information unless it displays a valid OMB control number.

# DECLARATION FOR UTILITY OR DESIGN PATENT APPLICATION (37 CFR 1.63)

☐ Declaration Submitted with Initial Filing *OR* ☒ Declaration Submitted after Initial Filing (surcharge (37 CFR 1.16 (e)) required)

| | |
|---|---|
| Attorney Docket Number | 23451-041 |
| First Named Inventor | Karapet Ablabutyan |
| *COMPLETE IF KNOWN* | |
| Application Number | 10/954,697 |
| Filing Date | 09/29/2004 |
| Art Unit | 3652 |
| Examiner Name | Not Yet Assigned |

**I hereby declare that:**

Each inventor's residence, mailing address, and citizenship are as stated below next to their name.

I believe the inventor(s) named below to be the original and first inventor(s) of the subject matter which is claimed and for which a patent is sought on the invention entitled:

WHEELCHAIR LIFT

(*Title of the Invention*)

the specification of which

☐ is attached hereto

*OR*

☒ was filed on (MM/DD/YYYY) 09/29/2004 as United States Application Number or PCT International Application Number 10/954,697 and was amended on (MM/DD/YYYY) _____ (if applicable).

I hereby state that I have reviewed and understand the contents of the above identified specification, including the claims, as amended by any amendment specifically referred to above.

I acknowledge the duty to disclose information which is material to patentability as defined in 37 CFR 1.56, including for continuation-in-part applications, material information which became available between the filing date of the prior application and the national or PCT international filing date of the continuation-in-part application.

I hereby claim foreign priority benefits under 35 U.S.C. 119(a)-(d) or (f), or 365(b) of any foreign application(s) for patent, inventor's or plant breeder's rights certificate(s), or 365(a) of any PCT international application which designated at least one country other than the United States of America, listed below and have also identified below, by checking the box, any foreign application for patent, inventor's or plant breeder's rights certificate(s), or any PCT international application having a filing date before that of the application on which priority is claimed.

| Prior Foreign Application Number(s) | Country | Foreign Filing Date (MM/DD/YYYY) | Priority Not Claimed | Certified Copy Attached? YES | NO |
|---|---|---|---|---|---|
| | | | ☐ | ☐ | ☐ |
| | | | ☐ | ☐ | ☐ |
| | | | ☐ | ☐ | ☐ |
| | | | ☐ | ☐ | ☐ |

☐ Additional foreign application numbers are listed on a supplemental priority data sheet PTO/SB/02B attached hereto:



This collection of information is required by 35 U.S.C. 115 and 37 CFR 1.63. The information is required to obtain or retain a benefit by the public which is to file (and by the USPTO to process) an application. Confidentiality is governed by 35 U.S.C. 122 and 37 CFR 1.11 and 1.14. This collection is estimated to take 21 minutes to complete, including gathering, preparing, and submitting the completed application form to the USPTO. Time will vary depending upon the individual case. Any comments on the amount of time you require to complete this form and/or suggestions for reducing this burden, should be sent to the Chief Information Officer, U.S. Patent and Trademark Office, U.S. Department of Commerce, P.O. Box 1450, Alexandria, VA 22313-1450. DO NOT SEND FEES OR COMPLETED FORMS TO THIS ADDRESS. SEND TO: **Commissioner for Patents, P.O. Box 1450, Alexandria, VA 22313-1450.**

*If you need assistance in completing the form, call 1-800-PTO-9199 and select option 2.*

American LegalNet, Inc.
www.USCourtForms.com

OIPE
DEC 05 2005
PATENT & TRADEMARK OFFICE

PTO/SB/01 (09-04)
Approved for use through 07/31/2006. OMB 0651-0032
U.S. Patent and Trademark Office; U.S. DEPARTMENT OF COMMERCE
Under the Paperwork Reduction Act of 1995, no persons are required to respond to a collection of information unless it displays a valid OMB control number.

# DECLARATION — Utility or Design Patent Application

| | | | |
|---|---|---|---|
| Direct all correspondence to: | ☒ The address associated with Customer Number: | 36614 | OR ☐ Correspondence address below |
| Name | | | |
| Address | | | |
| City | State | ZIP | |
| Country | Telephone | Fax | |

I hereby declare that all statements made herein of my own knowledge are true and that all statements made on information and belief are believed to be true; and further that these statements were made with the knowledge that willful false statements and the like so made are punishable by fine or imprisonment, or both, under 18 U.S.C. 1001 and that such willful false statements may jeopardize the validity of the application or any patent issued thereon.

**NAME OF SOLE OR FIRST INVENTOR:** ☐ A petition has been filed for this unsigned inventor

| | | | |
|---|---|---|---|
| Given Name (first and middle [if any]) Karapet | Family Name or Surname Ablabutyan | | |
| Inventor's Signature | | | Date 06-30-05 |
| Residence: City Glendale | State CA | Country US | Citizenship US |
| Mailing Address 1349 Raymond Avenue | | | |
| City Glendale | State CA | Zip 91201 | Country US |

**NAME OF SECOND INVENTOR:** ☐ A petition has been filed for this unsigned inventor

| | | | |
|---|---|---|---|
| Given Name (first and middle [if any]) Parkev | Family Name or Surname Krmoian | | |
| Inventor's Signature | | | Date |
| Residence: City Glendale | State CA | Country US | Citizenship Armenia |
| Mailing Address 520 W. Elk Avenue, #105 | | | |
| City Glendale | State CA | Zip 91204 | Country US |

☐ Additional inventors or a legal representative are being named on the _____ supplemental sheet(s) PTO/SB/02A or 02LR attached hereto.



American LegalNet, Inc.
www.USCourtForms.com

OIPE
DEC 05 2005
PATENT & TRADEMARK OFFICE

PATENT
Atty Docket No.: 23451-041

IN THE UNITED STATES PATENT AND TRADEMARK OFFICE

| | | |
|---|---|---|
| In re patent application of: | : | Group Art Unit: 3652 |
| Karapet Ablabutyan, et al. | : | Examiner: Not Yet Assigned |
| Application No.: 10/954,697 | : | Confirmation No. 5084 |
| Filed: 02/02/2004 | : | Date Mailed: 07/03/2005 (July 5, 2005) |
| For: WHEELCHAIR LIFT | : | |

## PETITION UNDER 37 CFR 1.47(a)

Mail Stop Missing Parts
Commissioner for Patents
P.O. Box 1450
Alexandria, Virginia 22313-1450

Dear Sir:

In accordance with the requirements of 37 CFR 1.47(a), Applicant hereby submit this Petition in response to the Notice of Missing Parts mailed 12/03/2004 (December 3, 2004), along with the fee as set forth in 37 CFR 1.17(g).

## REMARKS

On December 3, 2004, the office mailed a Notice to File Missing Parts requiring a signed oath or declaration for the above described patent application. In spite of multiple requests, the listed second inventor, Parkev Krmoian, has refused to join in the application. A Statements of Facts fully describing the exact facts surrounding his refusal to join is appended hereto as Exhibit A.

In accordance with 35 U.S.C. 116, Applicant has concurrently filed, under separate cover, a declaration signed by the first inventor, Karapet Ablabutyan, on behalf of the non-signing second inventor, Parkev Krmoian, as required by 37 CFR 1.64.

The last known address of the second inventor Parkev Krmoian is: 520 West Elk Ave #105, Glendale, California 91204.

In view of the forgoing, Applicant respectfully requests the Office to grant the instant petition and accept the declaration as filed herewith.

Respectfully submitted,

Date: July 5, 2005

Greg T. Warder
Registration No. 50,208
Attorney for Applicant(s)

MANATT, PHELPS & PHILLIPS LLP
1001 Page Mill Rd, Bldg 2
Palo Alto, California 94304
650-812-1321 Telephone
650-213-0260 Facsimile

# EXHIBIT A

## STATEMENT OF FACTS

I, Karapet Ablabutyan, state I have personal knowledge of the following facts showing that the non-signing inventor refused to join in the application.

1. I am an employee of Maxon Lift Corporation ("Maxon") and a joint inventor of Application Serial Number 10/954,697.

2. Parkev Krmoian left employment with Maxon on or about November 13, 2001.

3. In September 2004, prior to the above described patent application being filed, I contacted Parkev Krmoian by telephone to see if he would sign a declaration. He indicated at that time he was not sure whether or not he wanted to sign the declaration.

4. Within a week after my telephone call, I went to his home in an attempt to have him sign the declaration. He requested additional time to review the application papers and said he would contact me with his decision.

5. Approximately two to three days after I went to his home, I had not heard back from Parkev Krmoian as to his decision. Therefore I again telephoned him at his home and he indicated at that time that he would not sign the declaration.

6. In view of the forgoing, I have signed the declaration in support of the present application which includes Parkev Krmoian as a joint inventor but which does not include his signature.

Karapet Ablabutyan

Date: July 5, 2005

UNITED STATES PATENT AND TRADEMARK OFFICE

OIPE IAP77
DEC 05 2005
PATENT & TRADEMARK OFFICE

MAY 21, 2003

PTAS

Under Secretary of Commerce For Intellectual Property and
Director of the United States Patent and Trademark Office
Washington, DC 20231
www.uspto.gov

ZIYE J. ZHOU
1001 PAGE MILL ROAD
BUILDING 2
PALO ALTO, CA 94304

*102345077A*

UNITED STATES PATENT AND TRADEMARK OFFICE
NOTICE OF RECORDATION OF ASSIGNMENT DOCUMENT

THE ENCLOSED DOCUMENT HAS BEEN RECORDED BY THE ASSIGNMENT DIVISION OF THE U.S. PATENT AND TRADEMARK OFFICE. A COMPLETE MICROFILM COPY IS AVAILABLE AT THE ASSIGNMENT SEARCH ROOM ON THE REEL AND FRAME NUMBER REFERENCED BELOW.

PLEASE REVIEW ALL INFORMATION CONTAINED ON THIS NOTICE. THE INFORMATION CONTAINED ON THIS RECORDATION NOTICE REFLECTS THE DATA PRESENT IN THE PATENT AND TRADEMARK ASSIGNMENT SYSTEM. IF YOU SHOULD FIND ANY ERRORS OR HAVE QUESTIONS CONCERNING THIS NOTICE, YOU MAY CONTACT THE EMPLOYEE WHOSE NAME APPEARS ON THIS NOTICE AT 703-308-9723. PLEASE SEND REQUEST FOR CORRECTION TO: U.S. PATENT AND TRADEMARK OFFICE, ASSIGNMENT DIVISION, BOX ASSIGNMENTS, CG-4, 1213 JEFFERSON DAVIS HWY, SUITE 320, WASHINGTON, D.C. 20231.

RECORDATION DATE: 01/22/2003

REEL/FRAME: 013670/0318
NUMBER OF PAGES: 7

BRIEF: ASSIGNMENT OF ASSIGNOR'S INTEREST (SEE DOCUMENT FOR DETAILS).

ASSIGNOR:
ABLABUTYAN, KARAPET

DOC DATE: 02/07/2001

ASSIGNOR:
KRMOIAN, PARKVEV

DOC DATE: 01/04/2001

ASSIGNEE:
MAXON LIFT CORPORATION
11921 SLAUSEN AVENUE
SANTA FE SPRINGS, CALIFORNIA 90670

SERIAL NUMBER: 10251433
PATENT NUMBER:

FILING DATE: 09/20/2002
ISSUE DATE:

JOANN STEWART, EXAMINER
ASSIGNMENT DIVISION
OFFICE OF PUBLIC RECORDS

Attorney Docket No. 17793.00500

ASSIGNMENT

WHEREAS, I, PARKVEV KRMOIAN, hereinafter referred to as "ASSIGNOR", have invented certain new and useful improvements as described and set forth in the below-identified application for United States Letters Patent:

Title of Invention: WHEELCHAIR LIFT DEVICE

Date of Execution: _____ Filing Date: September 29, 2000 Serial No.: 09/675318

WHEREAS, Maxon Lift Corporation, a corporation of the State of California, 11921 Slauson Avenue, Santa Fe Springs, CA 90670 hereinafter referred to as "ASSIGNEE", is desirous of acquiring the entire right, title and interest in the said invention and application and in any Letters Patent which may be granted on the same;

NOW, THEREFORE, TO ALL WHOM IT MAY CONCERN: Be it known that, for One Dollar ($1.00) and other good and valuable considerations, receipt of which is hereby acknowledged by Assignor, Assignor has sold, assigned and transferred, and by these presents does sell, assign and transfer unto the said Assignee, and Assignee's successors and assigns, all right, title and interest in and to the said invention, said application for United States Letters Patent, and any Letters Patent which may hereafter be granted on the same in the United States and all countries throughout the world including any divisions, renewals, continuations in whole or in part, substitutions, conversions, reissues, prolongations or extensions thereof, said interest to be held and enjoyed by said Assignee as fully and exclusively as it would have been held and enjoyed by said Assignor had this assignment and transfer not been made, to the full end and term of any such Letters Patent.

Assignor further agrees that he will, without charge to said Assignee, but at Assignee's expense, cooperate with Assignee in the prosecution of said application and/or applications, execute, verify, acknowledge and deliver all such further papers, including applications for Letters Patent and for the reissue thereof, and instruments of assignment and transfer thereof, and will perform such other acts as Assignee lawfully may request, to obtain or maintain Letters Patent for said invention and improvement in any and all countries, and to vest title thereto in said Assignee, or Assignee's successors and assigns.

IN TESTIMONY WHEREOF, Assignor has hereunto signed his name to this assignment on the date indicated below.

Dated: 01-04-01

PARKEV KRMOIAN

STATE OF CALIFORNIA )
) ss
COUNTY OF LOS ANGELES )

On 01/04/2001 (date) before me, Parkev Krmoian, personally appeared Parkev KRMOIAN / personally known to me OR ~~proved to me on the basis of satisfactory evidence~~ to be the person whose name is subscribed to this instrument and acknowledged to me that he/she executed the same in his/her authorized capacity, and that by his/her signature on the instrument the person or the entity upon behalf of which the person acted, executed the instrument.

Witness my hand and official seal.

Notary Public

12236230.1

LAURA H. CASTERA
Commission # 1267059
Notary Public - California
Los Angeles County
My Comm. Expires Jun 11, 2004

Attorney Docket No. 17793.00500

# ASSIGNMENT

WHEREAS, I, KARAPET ABLABUTYAN, hereinafter referred to as "ASSIGNOR", have invented certain new and useful improvements as described and set forth in the below-identified application for United States Letters Patent:

Title of Invention: WHEELCHAIR LIFT DEVICE

Date of Execution: _____ Filing Date: September 29, 2000 Serial No.: 09/675318

WHEREAS, Maxon Lift Corporation, a corporation of the State of California, 11921 Slauson Avenue, Santa Fe Springs, CA 90670 hereinafter referred to as "ASSIGNEE", is desirous of acquiring the entire right, title and interest in the said invention and application and in any Letters Patent which may be granted on the same;

NOW, THEREFORE, TO ALL WHOM IT MAY CONCERN: Be it known that, for One Dollar ($1.00) and other good and valuable considerations, receipt of which is hereby acknowledged by Assignor, Assignor has sold, assigned and transferred, and by these presents does sell, assign and transfer unto the said Assignee, and Assignee's successors and assigns, all right, title and interest in and to the said invention, said application for United States Letters Patent, and any Letters Patent which may hereafter be granted on the same in the United States and all countries throughout the world including any divisions, renewals, continuations in whole or in part, substitutions, conversions, reissues, prolongations or extensions thereof, said interest to be held and enjoyed by said Assignee as fully and exclusively as it would have been held and enjoyed by said Assignor had this assignment and transfer not been made, to the full end and term of any such Letters Patent.

Assignor further agrees that he will, without charge to said Assignee, but at Assignee's expense, cooperate with Assignee in the prosecution of said application and/or applications, execute, verify, acknowledge and deliver all such further papers, including applications for Letters Patent and for the reissue thereof, and instruments of assignment and transfer thereof, and will perform such other acts as Assignee lawfully may request, to obtain or maintain Letters Patent for said invention and improvement in any and all countries, and to vest title thereto in said Assignee, or Assignee's successors and assigns.

IN TESTIMONY WHEREOF, Assignor has hereunto signed his name to this assignment on the date indicated below.

Dated: 02-07-01

KARAPET ABLABUTYAN

STATE OF California )
) ss
COUNTY OF Los Angeles )

On 02/07/2001 (date) before me, ~~Karapet Ablabutyan~~ Michael Thompson, personally appeared Karapet Ablabutyan / personally known to me OR proved to me on the basis of satisfactory evidence to be the person whose name is subscribed to this instrument and acknowledged to me that he/she executed the same in his/her authorized capacity, and that by his/her signature on the instrument the person or the entity upon behalf of which the person acted, executed the instrument.

Witness my hand and official seal.

Notary Public

MICHAEL THOMPSON
Commission # 1275457
Notary Public - California
Los Angeles County
My Comm. Expires Sep 25, 2004



12226359.1

# ASSIGNMENT OF PATENT APPLICATION

**WHEREAS, We, Karapet Ablabutyan, Glendale, CA,** and **Parkev Krmoian, Glendale, CA,** (hereinafter referred to as "**ASSIGNORS**"), have invented a certain invention entitled **WHEELCHAIR LIFT** for which an application for Letters Patent of the United States of America was filed on **September 29, 2004 (09/29/2004),** and accorded Application **Serial No. 10/954,697;** and

**WHEREAS, MAXON LIFT CORPORATION,** a corporation organized and existing under and by virtue of the laws of the **California** and having its place of business at **16205 Distribution Way, Cerritos, CA 90703, USA** (hereinafter referred to as "**ASSIGNEE**"), is desirous of acquiring the exclusive right, title and interest in, to and under said invention and in, to and under any Patent or similar legal protection to be obtained therefor in the United States of America, its territorial possessions and in any and all countries foreign thereto.

**NOW, THEREFORE,** for good and valuable consideration, the receipt of which is hereby acknowledged, **ASSIGNORS** hereby sell, assign, transfer and set over unto the said **ASSIGNEE**, its successors and assigns, the full and exclusive right, title and interest to said invention and to all Letters Patent or application or similar legal protection, not only in the United States and its territorial possessions, but in all countries foreign thereto to be obtained for said invention by said application, and to any continuation, division, renewal, substitute or reissue thereof or any legal equivalent thereof in the United States or a foreign country for the full term or terms for which the same may be granted, including all priority rights under the International Convention; and **ASSIGNORS** hereby authorize and request the United States Commissioner of Patents and Trademarks and any officials of foreign countries whose duty it is to issue patents or any legal equivalent thereof to said **ASSIGNEE**, its successors and assigns, in accordance with this Assignment.

**ASSIGNORS** hereby covenant that no assignment, sale, agreement or encumbrance has been or will be made or entered into which would conflict with this Agreement; and

**ASSIGNORS** further covenant that **ASSIGNEE** will, upon its request, be provided promptly with all pertinent facts and documents relating to said application, said invention and said Letters

Patent and legal equivalents as may be known and accessible to **ASSIGNORS** and will testify as to the same in any interference or litigation related thereto and will promptly execute and deliver to **ASSIGNEE** or its legal representative any and all papers, instruments or affidavits required to apply for, obtain, maintain, issue and enforce said application, said invention and said Letters Patent and said equivalents in the United States or in any foreign country, which may be necessary or desirable to carry out the purposes thereof.

Executed this _____ day of _____, 2005, at _____.

_____

Karapet Ablabutyan

State of _____) SS:

County of _____)

Before me personally appeared said Karapet Ablabutyan and acknowledged the foregoing instrument to be his free act and deed this _____ day of _____, 2005.

Seal _____

(Notary Public)

Executed this _____ day of _____, 2005, at _____.

_____

Parkev Krmoian

State of _____) SS:

County of _____)

Before me personally appeared said Parkev Krmoian and acknowledged the foregoing instrument to be his/her free act and deed this _____ day of _____, 2005.

Seal _____

(Notary Public)

From: Origin ID: (650)812-1325
Vicki Lorist
manatt | phelps | phillips
1001 Page Mill Road
Building 2
Palo Alto, CA 94304

FedEx Express

Ship Date: 10NOV05
ActWgt: 1 LB
System#: 9157705/INET2300
Account#: S *********

REF: 234510941

Delivery Address Bar Code

SHIP TO: (818)265-9442 BILL SENDER

**Parkev Krmoian**

**520 W. Elk Avenue**
**No. 105**
**Glendale, CA 91204**

**PRIORITY OVERNIGHT** **FRI**

Deliver By: 11NOV05

TRK# 7924 3554 0069 FORM 0201

**BUR** A2

91204 -CA-US
DSR-RES

**WZ JGXA**

Shipping Label: Your shipment is complete

1. Use the 'Print' feature from your browser to send this page to your laser or inkjet printer.
2. Fold the printed page along the horizontal line.
3. Place label in shipping pouch and affix it to your shipment so that the barcode portion of the label can be read and scanned.

**Warning: Use only the printed original label for shipping. Using a photocopy of this label for shipping purposes is fraudulent and could result in additional billing charges, along with the cancellation of your FedEx account number.**

Use of this system constitutes your agreement to the service conditions in the current FedEx Service Guide, available on fedex.com. FedEx will not be responsible for any claim in excess of $100 per package, whether the result of loss, damage, delay, non-delivery, misdelivery, or misinformation, unless you declare a higher value, pay an additional charge, document your actual loss and file a timely claim. Limitations found in the current FedEx Service Guide apply. Your right to recover from FedEx for any loss, including intrinsic value of the package, loss of sales, income interest, profit, attorney's fees, costs, and other forms of damage whether direct, incidental, consequential, or special is limited to the greater of $100 or the authorized declared value. Recovery cannot exceed actual documented loss. Maximum for items of extraordinary value is $500, e.g. jewelry, precious metals, negotiable instruments and other items listed in our Service Guide. Written claims must be filed within strict time limits, see current FedEx Service Guide.

From: Origin ID: (650)812-1325
Vicki Lorist
manatt | phelps | phillips
1001 Page Mill Road
Building 2
Palo Alto, CA 94304

FedEx Express

CLS 182795/03/16

Ship Date: 16NOV05
ActWgt: 1 LB
System#: 9157705/INET2300
Account#: S *********

REF: 23451-041

Delivery Address Bar Code

SHIP TO: (650)812-1325 BILL SENDER

**Greg Warder**
**Manatt, Phelps, Phillips, LLP**
**1001 Page Mill Road**
**Building 2**
**Palo Alto, CA 943041006**

**PRIORITY OVERNIGHT** **THU**

Deliver By: 17NOV05

TRK# 7907 0937 5754 FORM 0201

SFO A2

94304 -CA-US

**WA PAOA**

Shipping Label: Your shipment is complete

1. Use the 'Print' feature from your browser to send this page to your laser or inkjet printer.
2. Fold the printed page along the horizontal line.
3. Place label in shipping pouch and affix it to your shipment so that the barcode portion of the label can be read and scanned.

**Warning: Use only the printed original label for shipping. Using a photocopy of this label for shipping purposes is fraudulent and could result in additional billing charges, along with the cancellation of your FedEx account number.**

Use of this system constitutes your agreement to the service conditions in the current FedEx Service Guide, available on fedex.com. FedEx will not be responsible for any claim in excess of $100 per package, whether the result of loss, damage, delay, non-delivery, misdelivery, or misinformation, unless you declare a higher value, pay an additional charge, document your actual loss and file a timely claim. Limitations found in the current FedEx Service Guide apply. Your right to recover from FedEx for any loss, including intrinsic value of the package, loss of sales, income interest, profit, attorney's fees, costs, and other forms of damage whether direct, incidental, consequential, or special is limited to the greater of $100 or the authorized declared value. Recovery cannot exceed actual documented loss. Maximum for items of extraordinary value is $500, e.g. jewelry, precious metals, negotiable instruments and other items listed in our Service Guide. Written claims must be filed within strict time limits, see current FedEx Service Guide.

**IMPORTANT!**
For information on Hurricane Katrina, please click here.

Track Shipments

# Detailed Results

Quick Help

| | | | |
|---|---|---|---|
| **Tracking number** | 792435540069 | **Reference** | 234510941 |
| **Signed for by** | P.KRMOIAN | **Destination** | LOS ANGELES, CA |
| **Ship date** | Nov 10, 2005 | **Delivered to** | FedEx Location |
| **Delivery date** | Nov 12, 2005 3:49 PM | **Service type** | Priority Envelope |
| | | **Weight** | 0.5 lbs. |
| **Status** | Delivered | | |

| ***Date/Time*** | | ***Activity*** | ***Location*** | ***Details*** |
|---|---|---|---|---|
| **Nov 12, 2005** | 3:49 PM | **Delivered** | LOS ANGELES, CA | |
| **Nov 11, 2005** | 5:48 PM | At local FedEx facility | LOS ANGELES, CA | |
| | 9:20 AM | Delivery exception | LOS ANGELES, CA | Customer not available or business closed |
| | 8:13 AM | On FedEx vehicle for delivery | LOS ANGELES, CA | |
| | 7:29 AM | At local FedEx facility | LOS ANGELES, CA | |
| | 3:44 AM | Arrived at FedEx location | LOS ANGELES, CA | |
| | 2:16 AM | Departed FedEx location | OAKLAND, CA | |
| **Nov 10, 2005** | 7:02 PM | Arrived at FedEx location | OAKLAND, CA | |
| | 5:59 PM | Left origin | MENLO PARK, CA | |
| | 4:02 PM | Package data transmitted to FedEx | | |
| | 3:54 PM | Picked up | MENLO PARK, CA | |

Signature proof | Email results | Track more shipments

***Subscribe to tracking updates (optional)***

**Your Name:** **Your Email Address:**

| **Email address** | **Language** | **Exception updates** | **Delivery updates** |
|---|---|---|---|
| | English | ☐ | ☐ |
| | English | ☐ | ☐ |
| | English | ☐ | ☐ |
| | English | ☐ | ☐ |

**Select format:** ◉ HTML ○ Text ○ Wireless

**Add personal message:**

Not available for Wireless or non-English characters.

☐ By selecting this check box and the Submit button, I agree to these Terms and Conditions

Submit

Track Shipments
# Detailed Results

Quick Help

| | | | |
|---|---|---|---|
| **Tracking number** | 790709375754 | **Reference** | 23451-041 |
| **Ship date** | Nov 16, 2005 | **Destination** | Palo Alto, CA |
| | | **Service type** | Priority Envelope |
| | | **Weight** | 0.5 lbs. |
| **Status** | Package data transmitted to FedEx | | |

| ***Date/Time*** | | ***Activity*** | ***Location*** | ***Details*** |
|---|---|---|---|---|
| **Nov 16, 2005** | 4:08 PM | **Package data transmitted to FedEx** | | |

Signature proof | Email results | Track more shipments

***Subscribe to tracking updates (optional)***

**Your Name:** **Your Email Address:**

| **Email address** | **Language** | **Exception updates** | **Delivery updates** |
|---|---|---|---|
| | English | ☐ | ☐ |
| | English | ☐ | ☐ |
| | English | ☐ | ☐ |
| | English | ☐ | ☐ |

**Select format:** ◉ HTML ○ Text ○ Wireless

**Add personal message:**

Not available for Wireless or non-English characters.

☐ By selecting this check box and the Submit button, I agree to these Terms and Conditions

Submit

UNITED STATES PATENT AND TRADEMARK OFFICE

Commissioner for Patents
United States Patent and Trademark Office
P.O. Box 1450
Alexandria, VA 22313-1450
www.uspto.gov

MANATT PHELPS AND PHILLIPS
ROBERT D. BECKER
1001 PAGE MILL ROAD, BUILDING 2
PALO ALTO CA 94304

COPY MAILED

MAR 2 9 2007

OFFICE OF PETITIONS

In re Application of :
Karapet Ablabutyan, et al. :
Application No. 10/954,697 :
Filed: September 29, 2004 :
Attorney Docket No. 23451-041 :

ON PETITION

This is a decision on the petition under the unintentional provisions of 37 CFR 1.137(b), filed February 10, 2007, to revive the above-identified application.

The petition is **GRANTED**.

The application became abandoned for failure to timely file a reply within the meaning of 37 CFR 1.113 to the final Office action of July 13, 2006. The proposed reply required for consideration of a petition to revive must be a Notice of Appeal (and appeal fee required by 37 CFR 41.20(b)(2), an amendment that *prima facie* places the application in condition for allowance, a Request for Continued Examination and submission (37 CFR 1.114), or the filing of a continuing application under 37 CFR 1.53(b). See MPEP 711.03(c)(II)(A)(2). A three-month extension of time pursuant to the provisions of 37 CFR 1.136(a) was obtained. Accordingly, the date of abandonment of this application is January 14, 2007.

The petition satisfies the requirements of 37 CFR 1.137(b) in that petitioner has supplied (1) the reply in the form of a Request for Continued Examination (RCE) and fee of $790, and the submission required by 37 CFR 1.114; (2) the petition fee of $1500; and (3) an adequate statement of unintentional delay.

37 CFR 1.137(b)(3) requires a statement that "the entire delay in filing the required reply from the due date for the reply until the filing of a grantable petition pursuant to 37 CFR 1.137(b) was unintentional." Since the statement appearing in the petition varies from the language required by 37 CFR 1.137(b)(3), the statement is being construed as the required statement. Petitioner must notify the Office if this is **not** a correct reading of the statement appearing in the petition.

Telephone inquiries concerning this decision should be directed to the April Wise at (571) 272-1642.

This application is being referred to Technology Center AU 3652 for processing of the RCE and for appropriate action by the Examiner in the normal course of business on the amendment submitted in accordance with 37 CFR 1.114.

Irvin Dingle
Petitions Examiner
Office of Petitions

UNITED STATES PATENT AND TRADEMARK OFFICE

Commissioner for Patents
United States Patent and Trademark Office
P.O. Box 1450
Alexandria, VA 22313-1450
www.uspto.gov

MERCHANT & GOULD PC
P.O. BOX 2903
MINNEAPOLIS MN 55402-0903

COPY MAILED

NOV 30 2004

OFFICE OF PETITIONS

In re Application of
Aaron J. Suave et al.
Application No. 10954,702
Filed: September 29, 2004
Attorney Docket No. 40062.0237US01

: DECISION REFUSING STATUS
: UNDER 37 CFR 1.47(a)

This is in response to the petition under 37 CFR 1.47(a), filed September 29, 2004.

The petition is **DISMISSED**.

Rule 47 applicant is given TWO MONTHS from the mailing date of this decision to respond, correcting the below-noted deficiencies. Any response should be entitled "Request for Reconsideration of Petition Under 37 CFR 1.47(a)" and may include an oath or declaration executed by the inventor. **Failure to respond will result in abandonment of the application.** Any extensions of time will be governed by 37 CFR 1.136(a).

The above-identified application was filed on September 29, 2004 naming Aaron J. Suave, Ann M. Seltzer, Robert S. Dirickson, Roberto A. Franco, Jeff Davis, Roland Tokumi and John Bedworth as joint inventors, but without a signed declaration.

Petitioners seek status under 37 CFR 1.47(a) because diligent efforts to secure the execution of the declaration by joint inventor Ann M. Seltzer have been employed, but to no avail.

A grantable petition under 37 CFR 1.47(a) requires:

(1) proof that the non-signing inventor cannot be reached or refuses to sign the oath or declaration after having been presented with the application papers (specification, claims and drawings);

(2) an acceptable oath or declaration in compliance with 35 U.S.C. §§ 115 and 116;

(3) the petition fee; and

(4) a statement of the last known address of the non-signing inventor.

The present petition lacks items (1).

Petitioners claim that a telephone call to the last known address revealed that Ms. Seltzer no longer resides at that address, that other attempts to contact Ms. Seltzer were not successful and finally that Ms Seltzer is a named inventor in another patent application and that efforts to reach her at the last known address were also not successful.

Petitioners must present a showing that diligent efforts have been made to locate the non-signing inventor.[1] Petitioners must however provide details, in an affidavit or declaration of facts by a person with first hand knowledge of the details, of the so-called "other attempts" employed to locate Ms. Seltzer. Moreover, short of evidence to those efforts, additional efforts, such as Internet, e-mail, or telephone directory searches, must be undertaken to locate Ms. Seltzer to satisfy the diligent efforts requirement. If repeated attempts to contact/locate Ms. Seltzer by telephone, mail, and e-mail, are unsuccessful, petitioners will have established that Ms. Seltzer cannot be found despite diligent efforts.

If Ms. Seltzer refuses in writing to sign the declaration, petitioners should provide a copy of that written refusal with any renewed petition. If a verbal refusal to sign is made to a person, details should be given in an affidavit or declaration of facts by a person having first hand knowledge of the facts of refusal.

Finally, if it is found that joint inventor Ann M. Seltzer is residing at a different address than that listed in the initial petition, petitioners should provide a new statement of the last known address in a renewed petition.

Further correspondence with respect to this matter should be addressed as follows:

By mail: Assistant Commissioner for Patents
Box DAC
Washington, D.C. 20231

By FAX: (703) 308-6916
Attn: Office of Petitions

Telephone inquiries concerning this matter may be directed to the undersigned Petitions Attorney at (571) 272-3212.

Patricia Faison-Ball

Patricia Faison-Ball
Senior Petitions Attorney
Office of Petitions

[1] MPEP 409.03(d).

UNITED STATES PATENT AND TRADEMARK OFFICE

Commissioner for Patents
United States Patent and Trademark Office
P.O. Box 1450
Alexandria, VA 22313-1450
www.uspto.gov

MERCHANT & GOULD PC
P.O. BOX 2903
MINNEAPOLIS MN 55402-0903

**COPY MAILED**

JUN 07 2005

**OFFICE OF PETITIONS**

In re Application of
Aaron J. Suave et al.
Application No. 10/954,702
Filed: September 29, 2004
Attorney Docket No. 40062.0237US01

: DECISION ACCORDING STATUS
: UNDER 37 CFR 1.47(a)

This is in response to the renewed petition filed under 37 CFR 1.47(a) on May 27, 2005.

The petition is **GRANTED**.

The above-identified application was filed on September 29, 2004 naming Aaron J. Suave, Ann M. Seltzer, Robert S. Dirickson, Roberto A. Franco, Jeff Davis, Roland Tokumi and John Bedworth as joint inventors, but without a signed declaration. A petition was filed with the application, seeking status under 37 CFR 1.47(a) claiming that diligent efforts to secure the execution of the declaration by joint inventor Ann M. Seltzer had been employed, but to no avail. That petition was dismissed in a decision mailed November 30, 2004 as petitioners had not provided sufficient proof that diligent efforts had been employed to locate the non-signing inventor.

Comes now petitioner with the instant request for reconsideration.

A grantable petition under 37 CFR 1.47(a) requires: (1) proof that the non-signing inventor cannot be reached or refuses to sign the oath or declaration after having been presented with the application papers (specification, claims and drawings); (2) an acceptable oath or declaration in compliance with 35 U.S.C. §§ 115 and 116; (3) the petition fee; and (4) a statement of the last known address of the non-signing inventor. The above-identified application and papers have been reviewed and found in compliance with 37 CFR 1.47(a). In view thereof, this application is hereby accorded Rule 1.47(a) status.

In response to the decision dismissing the petition filed September 29, 2004, the instant petition shows that an updated address was located for Ms. Seltzer, that correspondence was sent to her at the last known address and that in addition to a telephone conversation between Ms. Seltzer and the Attorney of Record, telephone messages were left for her, but that she has not returned an executed oath or declaration. Thus, by her actions, it can be concluded that she refuses to cooperate

with the filing of the instant patent application.

All requirements under 37 CFR 1.47(a) therefore having been met, as provided in Rule 1.47( c), this Office will forward notice of this application's filing to the non-signing inventor at the address given in the petition. Notice of the filing of this application will also be published in the Official Gazette.

This application is being forwarded to Technology Center 2173 for examination in due course.

Telephone inquiries related to this decision should be directed to the undersigned Petitions Attorney at (571) 272-3212.

Patricia Faison-Ball

Patricia Faison-Ball
Senior Petitions Attorney
Office of Petitions

UNITED STATES PATENT AND TRADEMARK OFFICE

Commissioner for Patents
United States Patent and Trademark Office
P.O. Box 1450
Alexandria, VA 22313-1450
www.uspto.gov

ANN M. SELTZER
302 SUDDEN VALLEY
BELLINGHAM, WA 98229

**COPY MAILED**

JUN 07 2005

**OFFICE OF PETITIONS**

In re Application of
Aaron J. Suave et al.
Application No. 10/954,702
Filed: September 29, 2004
For: PRESERVING BROWSER WINDOW INTEGRITY

Dear Ms. Seltzer:

You are named as a joint inventor in the above identified United States patent application, filed under the provisions of 35 U.S.C. 116 (United States Code), and 37 CFR 1.47(a), Rules of Practice in Patent Cases. Should a patent be granted on the application you will be designated therein as a joint inventor.

As a named inventor you are entitled to inspect any paper in the file wrapper of the application, order copies of all or any part thereof (at a prepaid cost per 37 CFR 1.19) or make your position of record in the application. Alternatively, you may arrange to do any of the preceding through a registered patent attorney or agent presenting written authorization from you. If you care to join the application, counsel of record (see below) would presumably assist you. Joining in the application would entail the filing of an appropriate oath or declaration by you pursuant to 37 CFR 1.63.

Telephone inquiries regarding this communication should be directed to the undersigned Petitions Attorney at (571) 272-3212. Requests for information regarding your application should be directed to the File Information Unit at 703/308-2733. Information regarding how to pay for and order a copy of the application, or a specific paper in the application, should be directed to Certification Division at 703/308-9726 or 1-800-972-6382 (outside the Washington D.C. area).

Patricia Faison-Ball

Patricia Faison-Ball
Senior Petitions Attorney
Office of Petitions

cc:
MERCHANT & GOULD PC
P.O. BOX 2903
MINNEAPOLIS MN 55402-0903

UNITED STATES PATENT AND TRADEMARK OFFICE

Commissioner for Patents
United States Patent and Trademark Office
P.O. Box 1450
Alexandria, VA 22313-1450
www.uspto.gov

ASHKAN NAJAFI, P.A.
6817 SOUTHPOINT PARKWAY
SUITE 2301
JACKSONVILLE FL 32216

COPY MAILED

SEP 29 2005

OFFICE OF PETITIONS

| | | |
|---|---|---|
| In re Application of | : | |
| McFadden | : | |
| Application No. 10/954,716 | : | DECISION GRANTING |
| Deposited: October 1, 2004 | : | PETITION |
| Attorney Docket No. AMC4093 | : | |
| For: ROTATABLE OUTLET ADAPTOR | : | |

This is a decision on the petition, filed September 9, 2005, requesting, in effect, that the Notice of Incomplete Nonprovisional Application, mailed August 31, 2005 be withdrawn. The petition will be treated under 37 CFR 1.53(e).

The application was deposited on September 29, 2004 as U.S. Priority Mail. On August 31, 2005, the Office of Initial Patent Examination mailed a Notice informing petitioner that no filing date had been accorded to the application papers deposited on October 1, 2004 because no drawings were present, as is required by 35 U.S.C. 113.

In response to the Notice, petitioner timely filed the present petition. Petitioner states that 5 sheets of drawing figures were received in the Patent and Trademark Office (PTO) October 1, 2004. The petition is accompanied by a copy of applicant's itemized postcard receipt showing an Office of Initial Patent Examination generated barcode citing **September 30, 2004 (not October 1, 2004)** as the date of receipt. The postcard lists, *inter alia*, that the filing includes 5 sheets of drawings.

The return postcard constitutes *prima facie* evidence that 5 sheets of drawings, and all the items listed on the postcard, were received in the Office on September 30, 2004. MPEP 503. Therefore, the August 31, 2005 Notice is withdrawn **AND** the application is entitled to a filing date of September 30, 2004, not October 1, 2004.

Accordingly, the petition under 37 CFR 1.53(e) is granted. No petition fee has been or will be charged in connection with this matter.

After the mailing of this decision, the application will be returned to Office of Initial Patent Examination for further processing, with a filing date of **September 30, 2004**, using the copy of the 5 sheets of drawings submitted with the instant petition. Office records will be corrected to show that 5 sheets of drawings were present on filing.

Any inquiries pertaining to this matter may be directed to the undersigned at (571) 272-3230.

E. Shirene Willis

E. Shirene Willis
Senior Petitions Attorney
Office of Petitions

UNITED STATES PATENT AND TRADEMARK OFFICE

UNITED STATES DEPARTMENT OF COMMERCE
United States Patent and Trademark Office
Address: COMMISSIONER FOR PATENTS
P.O. Box 1450
Alexandria, Virginia 22313-1450
www.uspto.gov

| APPLICATION NO. | FILING DATE | FIRST NAMED INVENTOR | ATTORNEY DOCKET NO. | CONFIRMATION NO. |
|---|---|---|---|---|
| 10/954,747 | 09/30/2004 | Ahmed H. Mohamed | 14917.0464USU1 | 3672 |

27488 7590 12/27/2007
MERCHANT & GOULD (MICROSOFT)
P.O. BOX 2903
MINNEAPOLIS, MN 55402-0903

| EXAMINER |
|---|
| CHEUNG, HUBERT G |

| ART UNIT | PAPER NUMBER |
|---|---|
| 2168 | |

| MAIL DATE | DELIVERY MODE |
|---|---|
| 12/27/2007 | PAPER |

**Please find below and/or attached an Office communication concerning this application or proceeding.**

The time period for reply, if any, is set in the attached communication.

UNITED STATES PATENT AND TRADEMARK OFFICE

COMMISSIONER FOR PATENTS
UNITED STATES PATENT AND TRADEMARK OFFICE
P.O. BOX 1450
ALEXANDRIA, VA 22313-1450
www.uspto.gov

Gregory D. Leibold
Merchant & Gould (Microsoft)
P.O. Box 2903
Minneapolis, MN 55402-0903

MAILED

DEC 27 2007

TECHNOLOGY CENTER 2100

*In re* Application of:
Ahmed MOHAMED et al.
Appl. No.: 10/954,747
Filed: September 30, 2004
For: REMOTE FILE UPDATES THROUGH REMOTE PROTOCOL

DECISION ON PETITION UNDER 37 CFR § 1.59

This is a decision on the petition under 37 CFR § 1.59(b), filed on 11 December 2007, to expunge information submitted pursuant to MPEP § 724.05.

The petition is **DISMISSED**.

Petitioner requests that the information submitted on 11 December 2007 be expunged from the record if found not to be important to a reasonable examiner in deciding whether to allow the application to issue as a patent. The petition fee set forth in 37 CFR § 1.17(g) has been paid.

The petition is premature because the application has not been allowed or abandoned. Accordingly, it is not appropriate to make a final determination of whether or not the material requested to be expunged is "material," with "materiality" being defined as any information which the examiner considers as being important to a determination of patentability of the claims. Thus, the petition to expunge must be dismissed at this time.

During prosecution on the merits, the examiner will determine whether or not the information submitted on 11 December 2007 is considered to be "material." Once prosecution on the merits is closed, applicant may re-submit a petition to expunge the information. No further fee is required for such a second submission of a petition under 37 CFR § 1.59 to expunge information. If the information is not considered by the examiner to be material, the information will be expunged from the application and may be returned to applicant.

Any inquiry concerning this decision should be directed to the undersigned whose telephone number is (571) 272-3613.

Vincent N. Trans, SPRE/QAS
Technology Center 2100
Computer Architecture, Software, and
Information Security

# UNITED STATES PATENT AND TRADEMARK OFFICE

UNITED STATES DEPARTMENT OF COMMERCE
United States Patent and Trademark Office
Address: COMMISSIONER FOR PATENTS
P.O. Box 1450
Alexandria, Virginia 22313-1450
www.uspto.gov

| APPLICATION NO. | FILING DATE | FIRST NAMED INVENTOR | ATTORNEY DOCKET NO. | CONFIRMATION NO. |
|---|---|---|---|---|
| 10/954,747 | 09/30/2004 | Ahmed H. Mohamed | 14917.0464USU1 | 3672 |

27488 7590 10/09/2009
MERCHANT & GOULD (MICROSOFT)
P.O. BOX 2903
MINNEAPOLIS, MN 55402-0903

| EXAMINER |
|---|
| CHEUNG, HUBERT G |

| ART UNIT | PAPER NUMBER |
|---|---|
| 2159 | |

| MAIL DATE | DELIVERY MODE |
|---|---|
| 10/09/2009 | PAPER |

**Please find below and/or attached an Office communication concerning this application or proceeding.**

The time period for reply, if any, is set in the attached communication.

UNITED STATES PATENT AND TRADEMARK OFFICE

COMMISSIONER FOR PATENTS
UNITED STATES PATENT AND TRADEMARK OFFICE
P.O. BOX 1450
ALEXANDRIA, VA 22313-1450
www.uspto.gov

Rene A. Pereyra
Merchant & Gould (Microsoft)
P.O. Box 2903
Minneapolis, MN 55402-0903

| | |
|---|---|
| *In re* Application of:<br>Ahmed H. MOHAMED<br>Appl. No.: 10/954,747<br>Filed: September 30, 2004<br>For: REMOTE FILE UPDATES THROUGH REMOTE PROTOCOL | DECISION ON PETITION UNDER 37 CFR 1.59 |

This is a decision on the renewed petition under 37 CFR 1.59(b), filed on 10 September 2009 to expunge information submitted pursuant to MPEP § 724.05.

The petition is **GRANTED**.

Petitioner requests that the documents in a sealed envelop submitted on 11 December 2007 be expunged from the record. Petitioner states that the materials are proprietary subject. The petition fee set forth in 37 CFR 1.17(g) has been previously paid.

Applicant is required to retain the expunged documents for the life of any patent, which issues on the above-identified application.

The expunged documents have been removed from the official file and will be forwarded to the shred room to be shredded. The petition and support documents have been closed from public view.

Any inquiry concerning this decision should be directed to the undersigned whose telephone number is (571) 272-3613.

*/Vincent N. Trans/*
Vincent N. Trans, SPRE/QAS
Technology Center 2100
Computer Architecture and Software

UNITED STATES PATENT AND TRADEMARK OFFICE

Commissioner for Patents
United States Patent and Trademark Office
P.O. Box 1450
Alexandria, VA 22313-1450
www.uspto.gov

**STITES & HARBISON PLLC**
**1199 NORTH FAIRFAX STREET**
**SUITE 900**
**ALEXANDRIA VA 22314**

**COPY MAILED**

JUL 24 2007

**OFFICE OF PETITIONS**

| | | |
|---|---|---|
| In re Application of | : | |
| **POHLMAN,** Marlin B. | : | |
| Application No. 10/954,767 | : | DECISION ON PETITION |
| Filed: October 01, 2004 | : | TO WITHDRAW |
| Attorney Docket No. **P08189US00/DEJ** | : | FROM RECORD |
| | : | |

This is a decision on the Request to Withdraw as attorney or agent of record under 37 C.F.R. § 1.36(b), filed April 23, 2007 and re-submitted on July 12, 2007.

The request is **APPROVED**.

A grantable request to withdraw as attorney/agent of record must be signed by every attorney/agent seeking to withdraw or contain a clear indication that one attorney is signing on behalf of another/others. A request to withdraw will not be approved unless at least 30 (thirty) days would remain between the date of approval and the later of the expiration date of a time to file a response or the expiration date of the maximum time period which can be extended under 37 C.F.R. § 1.136(a).

The request was signed by Douglas Jackson on behalf of all attorneys who are associated. All attorneys/agents associated have been withdrawn. Applicant is reminded that there is no attorney of record at this time.

All future correspondence will be directed to the first named inventor Marlin Pohlman at the address indicated below.

Telephone inquiries concerning this decision should be directed to Tredelle Jackson at 571-272-2783.

Monica A. Graves
Petitions Examiner
Office of Petitions

cc: **MARLIN B. POHLMAN**
**7966 EAST 41ST STREET**
**UNIT 11 WEST**
**TULSA, OK 74145**

UNITED STATES PATENT AND TRADEMARK OFFICE

Commissioner for Patents
United States Patent and Trademark Office
P.O. Box 1450
Alexandria, VA 22313-1450
www.uspto.gov

GEORGE O. SAILE
28 DAVIS AVENUE
POUGHKEEPSIE, NY 12603

COPY MAILED

NOV 16 2005

OFFICE OF PETITIONS

| | |
|---|---|
| In re Application of | : |
| Hsien-Tsung Liu et al | : |
| Application No. 10/954,781 | : DECISION GRANTING PETITION |
| Filed: September 30, 2004 | : UNDER 37 CFR 1.313(c)(2) |
| Attorney Docket No. MEG02-006C | : |

This is a decision on the petition, filed November 14, 2005, under 37 CFR 1.313(c)(2) to withdraw the above-identified application from issue after payment of the issue fee.

The petition is **GRANTED**.

The above-identified application is withdrawn from issue for consideration of a submission under 37 CFR 1.114 (request for continued examination). See 37 CFR 1.313(c)(2).

***Petitioner is advised that the issue fee paid on October 14, 2005 in the above-identified application cannot be refunded. If, however, the above-identified application is again allowed, petitioner may request that it be applied towards the issue fee required by the new Notice of Allowance.***[1]

Telephone inquiries should be directed to the undersigned at (571) 272-3218.

This matter is being referred to Technology Center AU 2812 for processing of the request for continued examination under 37 CFR 1.114 and for consideration of the concurrently filed amendment.

Frances Hicks
Petitions Examiner
Office of Petitions

---

[1] *The request to apply the issue fee to the new Notice may be satisfied by completing and returning the new Issue Fee Transmittal Form PTOL-85(b) (along with any balance due or the amount due at the time of payment), which includes the following language thereon: "Commissioner for Patents is requested to apply the Issue Fee and Publication Fee (if any) or re-apply any previously paid issue fee to the application identified above." Petitioner is advised that, whether a fee is indicated as being due or not, the Issue Fee Transmittal Form* ***must*** *be completed and timely submitted to avoid abandonment. Note the language in bold text on the first page of the Notice of Allowance and Fee(s) Due (PTOL-85).*

UNITED STATES PATENT AND TRADEMARK OFFICE

Commissioner for Patents
United States Patent and Trademark Office
P.O. Box 1450
Alexandria, VA 22313-1450
www.uspto.go

MOORE & VAN ALLEN PLLC
P.O. BOX 13706
Research Triangle Park, NC 27709

COPY MAILED
MAY 3 1 2007
OFFICE OF PETITIONS

| | | |
|---|---|---|
| In re Application of | : | |
| Radhakrishan et al. | : | |
| Application No. 10/954787 | : | DECISION ON |
| Filing or 371(c) Date: 09/30/2004 | : | PETITION |
| Attorney Docket Number: 014811-358.71CT | : | |

This is a decision in response to the petition under 37 CFR 1.137(a), filed March 29, 2007, to revive the above-identified application. The petition is properly treated under 37 CFR 1.181(a). The delay in treating this petition is regretted.

This Petition is hereby **dismissed**.

Any further petition must be submitted within TWO (2) MONTHS from the mail date of this decision. Extensions of time under 37 CFR 1.136(a) are permitted. The reconsideration request should include a cover letter entitled "Renewed Petition under [insert the applicable code section]." This is **not** final agency action within the meaning of 5 U.S.C. § 704.

**Background**

The above-identified application became abandoned for failure to timely and properly reply to the non-final office action, mailed September 6, 2006. The Office action set a three (3) month period for reply, and provided for extensions of time under 37 CFR 1.136(a). No response having been received, the application became abandoned on December 7, 2006. A Notice of Abandonment was mailed March 21, 2007.

**The present petition**

Applicant files the present Petition and asserts that a timely reply to the Office action was filed on January 17, 2007, including a request for a one (1) month extension of time and fee. In support of this assertion, Applicant includes a copy of the reply, along with a copy of an Auto-Reply Facsimile Transmission report from this Office acknowledging receipt of 6 pages from petitioner on January 17, 2007. A review of the copy of the reply filed with the petition reveals that it includes a Certificate of Transmission under 37 CFR 1.8 that the reply was transmitted via facsimile to this office on January 17, 2007. A review of the Remarks/Argument reveals that Applicant authorized this Office to charge the fee for a one month extension of time. The

Remarks/Argument was apparently executed by Petitioner herein, although the signature is not accompanied by a printing of the name.

**A Grantable Petition Under 37 CFR 1.137(a)**

A grantable petition to revive an abandoned application under 37 CFR 1.137(a) must be accompanied by: (**1**) the required reply (unless previously filed), which may met by the filing of a notice of appeal and the requisite fee; a continuing application; an amendment or request for reconsideration which *prima facie* places the application in condition for allowance, or a first or second submission under 37 CFR 1.129(a) if the application has been pending for at least two years as of June 8, 1995, taking into account any reference made in such application to any earlier filed application under 35 USC 120, 121 and 365(c); (**2**) the petition fee as set forth in 37 CFR 1.17(l); (**3**) a showing to the satisfaction of the Director that the entire delay in filing the required reply from the due date for the reply until the filing of a grantable petition pursuant to 37 CFR 1.137(a) was unavoidable; and (**4**) any terminal disclaimer (and fee as set forth in 37 CFR 1.20(d)) required pursuant to 37 CFR 1.137(c).

Applicant lacks item (**3**) as set forth above.

**Applicable Law, Rules and MPEP**

As to item (**3**), Applicant must provide a showing to the satisfaction of the Director that the entire delay in filing the required reply from the due date for the reply until the filing of a grantable petition pursuant to 37 CFR 1.137(a) was unavoidable. In order to determine whether the delay was unavoidable, the courts have adopted a "reasonably prudent person" standard. The courts have provided that:

> [t]he word 'unavoidable' . . . is applicable to ordinary human affairs, and requires no more or greater care or diligence than is generally used and observed by prudent and careful men in relation to their most important business. It permits them in the exercise of this care to rely upon the ordinary and trustworthy agencies of mail and telegraph, worthy and reliable employees, and such other means and instrumentalities as are usually employed in such important business. If unexpectedly, or through the unforeseen fault or imperfection of these agencies and instrumentalities, there occurs a failure, it may properly be said to be unavoidable, all other conditions of promptness in its rectification being present.

In re Mattullath, 38 App. D.C. 497, 514-15 (1912)(quoting Ex parte Pratt, 1887 Dec. Comm'r Pat. 31, 32-33 (1887)); see also Winkler v. Ladd, 221 F. Supp. 550, 552, 138 USPQ 666, 167-68 (D.D.C. 1963), aff'd, 143 USPQ 172 (D.C. Cir. 1963); Ex parte Henrich, 1913 Dec. Comm'r Pat. 139, 141 (1913). In addition, decisions on revival are made on a "case-by-case basis, taking all the facts and circumstances into account." Smith v. Mossinghoff, 671 F.2d 533, 538, 213 USPQ 977, 982 (D.C. Cir. 1982). Finally, a petition cannot be granted where a petitioner has failed to meet his or her burden of establishing that the delay was "unavoidable." Haines v. Quigg, 673 F. Supp. 314, 316-17, 5 USPQ2d 1130, 1131-32 (N.D. Ind. 1987).

"The critical phrase 'unless it be shown to the satisfaction of the Commissioner that such delay was unavoidable' has remained unchanged since first enacted in 1861." Smith v. Mossinghoff, 671 F.2d 533, 538, 213 U.S.P.Q. (BNA) 977 (D.C. Cir. 1982). The standard for "unavoidable" delay for reinstating a patent is the same as the unavoidable standard for reviving an application. See Ray v. Lehman, 55 F.3d 606, 608-609, 34 U.S.P.Q.2d (BNA) 1786, 1787 (Fed. Cir. 1995) (citing In re patent No. 4,409,763, 7 U.S.P.Q.2d (BNA) 1798, 1800 (Comm'r Pat. 1990; Smith v. Mossinghoff, 671 F.2d 533, 538, 213 U.S.P.Q. (BNA) 977 (D.C. Cir. 1982). The court in In re Mattullath, accepted the standard which had been proposed by Commissioner Hall which "requires no more or greater care or diligence than is generally used and observed by prudent and careful men in relation to their most important business." In re Mattullath, 38 App. D.C. 497, 514-515 (1912) (quoting Ex parte Pratt, 1887 Dec. Comm'r Pat. 31, 32-33 (1887)). However, "The question of whether an applicant's delay in prosecuting an application was unavoidable [will] be decided on a case-by-case basis, taking all of the facts and circumstances into account."[1] Nonawareness of the content of, or a misunderstanding of, PTO statutes, PTO rules, the MPEP, or Official Gazette notices, does not constitute unavoidable delay.[2]

The statute requires a "showing" by petitioner. Therefore, petitioner has the burden of proof. The decision will be based solely on the written, administrative record in existence. It is not enough that the delay was unavoidable; petitioner must prove that the delay was unavoidable. A petition will not be granted if petitioner provides insufficient evidence to "show" that the delay was unavoidable.

**Analysis and conclusion**

A review of the deposit account code reveals that the authorized user and/or company is not listed on the account. As such, the Office is unable to charge the extension of time fee.

37 CFR 1.135(b) provides that

> Prosecution of an application to save it from abandonment pursuant to paragraph (a) of this section must include such complete and proper reply as the condition of the application may require. The admission of, or refusal to admit, any amendment after final rejection or any amendment not responsive to the last action, or any related proceedings, will not operate to save the application from abandonment. (Emphasis supplied).

The reply required a one (1) month extension of time and fee in order to have been considered timely. Applicant failed to provide the one (1) month extension of time fee. As such, Applicant

---

[1] Smith v. Mossinghoff, 671 F.2d 533, 538, 213 U.S.P.Q. (BNA) 977 (1982).

[2] See Smith v. Mossinghoff, 671 F.2d 533, 538, 213 U.S.P.Q. (BNA) 977 (Fed. Cir. 1982) (citing Potter v. Dann, 201 U.S.P.Q. (BNA) 574 (D. D.C. 1978) for the proposition that counsel's nonawareness of PTO rules does not constitute "unavoidable" delay)); Vincent v. Mossinghoff, 1985 U.S. Dist. LEXIS 23119, 13, 230 U.S.P.Q. (BNA) 621 (D. D.C. 1985) (Plaintiffs, through their counsel's actions, **or their own**, must be held responsible for having noted the MPEP section and Official Gazette notices expressly stating that the certified mailing procedures outlined in 37 CFR 1.8(a) do not apply to continuation applications.) (Emphasis added).

has failed to demonstrate that a complete and proper reply was filed, and that the failure to timely and properly reply to the Office action was unavoidable.

**Conclusion**

The petition is dismissed without prejudice. Applicant should file a Request for Reconsideration of Petition and demonstrate that Petitioner herein was an authorized user of the deposit account at the filing of the extension of time.

**Alternate venue**

Public Law 97-247, § 3, 96 Stat. 317 (1982), which revised patent and trademark fees, amended 35 U.S.C. § 41(a)(7) to provide for the revival of an "unintentionally" abandoned application without a showing that the delay in was "unavoidable." An "unintentional" petition under 37 CFR 1.137(b) must be accompanied by the required fee.

The filing of a petition under 37 CFR 1.137(b) cannot be intentionally delayed and therefore must be filed promptly. A person seeking revival due to unintentional delay can not make a statement that the delay was unintentional unless the entire delay, including the delay from the date it was discovered that the application was abandoned until the filing of the petition to revive under 37 CFR 1.137(b), was unintentional. A statement that the delay was unintentional is not appropriate if petitioner intentionally delayed the filing of a petition for revive under 37 CFR 1.137(b).

Further correspondence with respect to this matter should be addressed as follows:

| | |
|---|---|
| By mail: | Director for Patents<br>PO Box 1450<br>Alexandria, VA 22313-1450 |
| By FAX: | (571) 273-8300<br>Attn: Office of Petitions |
| By hand: | Customer Service Window<br>Randolph Building<br>401 Dulany Street<br>Alexandria, VA 22314 |

Telephone inquiries concerning this matter should be directed to the undersigned at (571) 272-3232.

Derek L. Woods
Attorney
Office of Petitions

UNITED STATES PATENT AND TRADEMARK OFFICE

Commissioner for Patents
United States Patent and Trademark Office
P.O. Box 1450
Alexandria, VA 22313-1450
www.uspto.go

MOORE & VAN ALLEN PLLC
P.O. BOX 13706
Research Triangle Park, NC 27709

COPY MAILED

JUL 30 2007

OFFICE OF PETITIONS

| | | |
|---|---|---|
| In re Application of | : | |
| Radhakrishan et al. | : | |
| Application No. 10/954787 | : | DECISION ON |
| Filing or 371(c) Date: 09/30/2004 | : | PETITION |
| Attorney Docket Number: 014811-358.71CT | : | |

This is a decision in response to the "Resubmission of Petition for Revival of an Application for patent Abandoned unavoidably Under 37 CFR 1.137(a)," filed June 4, 2007. The delay in treating this petition is regretted.

This Petition is hereby **granted**.

## Background

The above-identified application became abandoned for failure to timely and properly reply to the non-final office action, mailed September 6, 2006. The Office action set a three (3) month period for reply, and provided for extensions of time under 37 CFR 1.136(a). No response having been received, the application became abandoned on December 7, 2006. A Notice of Abandonment was mailed March 21, 2007.

## The March 29, 2007 petition

Applicant filed a petition on March 29, 2007 wherein Applicant asserted that a timely reply to the Office action was filed on January 17, 2007, including a request for a one (1) month extension of time and fee. In support of this assertion, Applicant included a copy of the reply, along with a copy of an Auto-Reply Facsimile Transmission report from this Office acknowledging receipt of 6 pages from petitioner on January 17, 2007. A review of the copy of the reply filed with the petition revealed that it includes a Certificate of Transmission under 37 CFR 1.8 that the reply was transmitted via facsimile to this office on January 17, 2007.

In view of the above, an attempt to charge the deposit account on or about May 31, 2007 was made, where it was discovered that this Office was unable to charge the deposit account.

Accordingly, the petition was dismissed. Petitioner was asked to demonstrate her authorization to charge fees to the deposit account.

**The present Resubmission of Petition**

Applicant files the present resubmission of the petition and demonstrated that Petitioner herein (who also filed the March 29, 2007 petition, and the reply filed January 17, 2007), is an authorized user of the deposit account. Petitioner is unable to demonstrate that she was an authorized user of the deposit account in January 17, 2007; however, petitioner provides evidence that she was associated with the deposit account in October, 2006.

**Analysis**

A review of Office records reveals that the Office action, mailed September 6, 2006, set a three (3) month period for reply. The reply, without any extension(s) of time, was due not later than December 6, 2006. The Office action provided for extensions of time under 37 CFR 1.136(a).

A review of the reply filed January 17, 2007, reveals that Applicant authorized a one (1) month extension of time "extending the deadline from January 6, 2007 to February 6, 2007." Applicant's reply, however, required a two (2) month extension of time.

A further review of office records reveals that Applicant filed an authorization to "charge any additional fee(s) or any underpayment of fee(s)" in the Fee Transmittal form filed with the application papers on September 30, 2004.

**Conclusion**

The petition satisfies the requirements of 37 CFR 1.137(a) in that petitioner has supplied (1) the required reply; (2) the petition fee, and (3) a showing to the satisfaction of the Director that the entire delay was unavoidable.

The petition fee will not be refunded. The rules and statutory provisions governing the operations of the U.S. Patent and Trademark Office require payment of a fee on filing each petition to revive an abandoned application for patent based on unavoidable delay or to accept an unavoidably delayed payment of a fee for issuing a patent. In this instance, the fee required by law is $500

The application will be referred to Technology Center Art Unit 1654 for processing of the Reply, and for continued examination in due course.

Telephone inquiries concerning this matter should be directed to the undersigned at (571) 272-3232.

Derek L. Woods
Attorney
Office of Petitions

UNITED STATES PATENT AND TRADEMARK OFFICE

Commissioner for Patents
United States Patent and Trademark Office
P.O. Box 1450
Alexandria, VA 22313-1450
www.uspto.go

MOORE & VAN ALLEN PLLC
P.O. BOX 13706
Research Triangle Park, NC 27709

COPY MAILED
DEC 16 2008

| | | |
|---|---|---|
| In re Application of | : | |
| Radhakrishan et al. | : | |
| Application No. 10/954787 | : | DECISION ON |
| Filing or 371(c) Date: 09/30/2004 | : | PETITION |
| Attorney Docket Number: 014811-358.71CT | : | |

This is a decision in response to the "Second Resubmission of Petition for Revival of an Application for patent Abandoned unavoidably Under 37 CFR 1.137(a)," filed November 15, 2008, to revive the above-identified application.

This Petition is hereby **dismissed as moot**.

The above-identified application became abandoned for failure to timely and properly reply to the non-final office action, mailed September 6, 2006. The Office action set a three (3) month period for reply, and provided for extensions of time under 37 CFR 1.136(a). No response having been received, the application became abandoned on December 7, 2006. A Notice of Abandonment was mailed March 21, 2007.

**Review of Office records**

A review of Office records reveal that Applicant filed a petition under 37 CFR 1.137(a) on March 29, 2007, that was dismissed in a Decision mailed May 31, 2007. Applicant filed a renewed petition on June 4, 2007, which was granted in a Decision mailed July 30, 2007. In view the granted pettion, the present second renewed petition is dismissed as moot.

No petition fee has been charged and none is due.

Telephone inquiries concerning this matter should be directed to the undersigned at (571) 272-3232.

/Derek L. Woods/
Derek L. Woods
Attorney
Office of Petitions

UNITED STATES PATENT AND TRADEMARK OFFICE

UNITED STATES DEPARTMENT OF COMMERCE
United States Patent and Trademark Office
Address: COMMISSIONER FOR PATENTS
P.O. Box 1450
Alexandria, Virginia 22313-1450
www.uspto.gov

MOORE & VAN ALLEN PLLC
P.O. BOX 13706
Research Triangle Park, NC 27709

Mail Date: 04/21/2010

| | | |
|---|---|---|
| **Applicant** | : Balasingam Radhakrishnan | : DECISION ON REQUEST FOR |
| **Patent Number** | : 7611864 | : RECALCULATION of PATENT |
| **Issue Date** | : 11/03/2009 | : TERM ADJUSTMENT IN VIEW |
| **Appliction No** | : 10/954,787 | : OF WYETH AND NOTICE OF INTENT TO |
| **Filed** | : 09/30/2004 | : ISSUE CERTIFICATE OF CORRECTION |
| | | : |

The Request for Recalculation is **GRANTED** to the extent indicated.

The patent term adjustment has been determined to be **982** days. The USPTO will *sua sponte* issue a certificate of correction reflecting the amount of PTA days determined by the recalculation.

Prior to the issuance of the certificate of correction, the USPTO will afford patentee an opportunity to be heard and request reconsideration. Accordingly, patentee has **one month or thirty (30) days**, whichever is longer, to file a request for reconsideration of this patent term adjustment calculation. See 35 U.S.C. 154(b)(3)(B)(ii) and 37 CFR 1.322(a)(4). No extensions of time will be granted under 37 CFR 1.136.

Patentee should use document code PET.OP if electronically filing a request for reconsideration of this patent term adjustment calculation. The patentee must also include the information required by 37 CFR 1.705(b)(2) and the fee required by 37 CFR 1.18(e). If patentee does not file a timely request for reconsideration of this patent term adjustment calculation including the information required by 37 CFR 1.705(b)(2) and the fee required by 37 CFR 1.18(e), the USPTO will issue a certificate of correction reflecting the PTA determination noted above.

Patentee should be aware that in order to preserve the right to review in the United States District Court for the District of Columbia of the USPTO patent term adjustment determination, patentee must ensure that he or she also take the steps required under 35 U.S.C. 154(b)(4)(A) in a timely manner. Nothing in the request for recalculation should be construed as providing an alternative time frame for commencing a civil action under 35 U.S.C. 154(b)(4)(A).

Any questions concerning this decision should be directed to the Office of Patent Legal Administration at 571-272-7702.

UNITED STATES PATENT AND TRADEMARK OFFICE

COMMISSIONER FOR PATENTS
UNITED STATES PATENT AND TRADEMARK OFFICE
P.O. BOX 1450
ALEXANDRIA, VA 22313-1450
www.uspto.gov

Maria S. Swiatek
DORSEY & WHITNEY LLP
4 Embarcadero Center, Suite 3400
San Francisco, CA 94111

COPY MAILED
SEP 14 2005
OFFICE OF PETITIONS

| | |
|---|---|
| In re Application of | : |
| Senzaki, et al. | : DECISION REFUSING STATUS |
| Application No. 10/954,819 | : UNDER 37 CFR 1.47(a) |
| Filed: September 29, 2004 | : |
| Dkt. No.: A-71899/MSS/TJH | : |
| (463035-1 | : |
| For: ATOMIC LAYER DEPOSITION OF | : |
| HAFNIUM-BASED HIGH-K DIELECTRIC | : |

This decision is in response to the petition under 37 CFR 1.47(a), filed July 8, 2005.

The petition is **DISMISSED**.

Rule 47 applicant is given TWO MONTHS from the mailing date of this decision to reply, correcting the below-noted deficiencies. Any reply should be entitled "Request for Reconsideration of Petition Under 37 CFR 1.47(a)," and should only address the deficiencies noted below, except that the reply may include an oath or declaration executed by the non-signing inventor. Failure to respond will result in abandonment of the application. Any extensions of time will be governed by 37 CFR 1.136(a).

The above-identified application was filed September 29, 2004 without an executed oath or declaration. Accordingly, a Notice to File Missing Parts of Nonprovisional Application was mailed December 6, 2004 requiring an executed oath or declaration and a surcharge.

A grantable decision under 37 CFR 1.47(a) requires: A grantable petition under 37 CFR 1.47(a) requires: (1) proof that the non-signing inventor cannot be reached or refuses to sign the oath or declaration after having been presented with the application papers (specification, claims and drawings); (2) an acceptable oath or declaration in compliance with 35 U.S.C. §§ 115 and 116; (3) the petition fee; and (4) a statement of the last known address of the non-signing inventor.

The instant petition fails to satisfy requirement (2) set forth above. Petitioners have failed to submit an oath or declaration for the instant application executed by the available inventors.

Any renewed petition must be accompanied by a proper oath or declaration in compliance with 37 CFR 1.63.

As to item (3), $200.00 is the current petition fee required for a petition under 37 CFR 1.47. As petition has only submitted $130.00 in connection with this matter, the remaining $70.00 has been charged to petitioners' deposit account as authorized.

Further correspondence with respect to this matter should be addressed as follows:

By mail: Mail Stop Petition
Commissioner for Patents
P.O. Box 1450
Alexandria, VA 22313-1450

By facsimile: (571) 272-8300

By hand: U.S. Patent and Trademark Office
Customer Window
Mail Stop Petition
Randolph Building
Dulany Street
Alexandria, VA 22314

Telephone inquiries regarding this decision should be directed to the undersigned at (571) 272-3205.

Alesia M. Brown
Petitions Attorney
Office of Petitions

UNITED STATES PATENT AND TRADEMARK OFFICE

COMMISSIONER FOR PATENTS
UNITED STATES PATENT AND TRADEMARK OFFICE
P.O. BOX 1450
ALEXANDRIA, VA 22313-1450
www.uspto.gov

COPY MAILED

MAR 1 5 2006

OFFICE OF PETITIONS

Dorsey & Whitney LLP
Intellectual Property Department
555 California Street
Suite 1000
San Francisco, CA 94104-1513

| | |
|---|---|
| In re Application of | : |
| Lee, et al. | : DECISION GRANTING STATUS |
| Application No. 10/954,819 | : UNDER 37 CFR 1.47(a) |
| Filed: September 29, 2004 | : |
| Dkt. No.: A-71899/MSS/TJH | : |
| (463035-1 | : |
| For: ATOMIC LAYER DEPOSITION OF | : |
| HAFNIUM-BASED HIGH-K DIELECTRIC | : |

This decision is in response to the renewed petition under 37 CFR 1.47(a), filed November 16, 2005.

The petition is **GRANTED**.

Petitioners have shown that inventor Sang-In Lee has refused to sign the oath or declaration for the above-identified application after having been presented with the application papers.

The above-identified application and papers have been reviewed and found in compliance with 37 CFR 1.47(a). This application is hereby accorded Rule 1.47(a) status.

As provided in Rule 1.47(c), this Office will forward notice of this application's filing to the non-signing inventors at the addresses given in the petition. Notice of the filing of this application will also be published in the Official Gazette.

After this decision is mailed, the above-identified application will be returned to the Office of Initial Patent Examination for further processing.

Telephone inquiries regarding this decision should be directed to the undersigned at (571) 272-3205.

Alesia M. Brown
Petitions Attorney
Office of Petitions

UNITED STATES PATENT AND TRADEMARK OFFICE

COMMISSIONER FOR PATENTS
UNITED STATES PATENT AND TRADEMARK OFFICE
P.O. BOX 1450
ALEXANDRIA, VA 22313-1450
www.uspto.gov

SANG-IN LEE
22608 SAN JUAN ROAD
CUPPERTINO, CA 94014

| | | |
|---|---|---|
| In re Application of | : | |
| Lee, et al. | : | |
| Application No. 10/954,819 | : | LETTER |
| Filed: September 29, 2004 | : | |
| Atty. Dkt. No.: A-71899/MSS/TJH | : | |
| For: ATOMIC LAYER DEPOSITION OF | : | |
| HAFNIUM-BASED HIGH-K DIELECTRIC | : | |

COPY MAILED
MAR 1 5 2006
OFFICE OF PETITIONS

Dear Sir:

You are named as an inventor in the above-identified United States patent application filed under the provisions of 35 U.S.C. 116 (United States Code) and 37 C.F.R. § 1.47(a), Rules of Practice in Patent Cases. Should a patent be granted on the application you will be designated therein as a joint inventor.

As a named inventor you are entitled to inspect any paper in the file wrapper of the application, order copies of all or any part thereof (at a prepaid cost as per 37 C.F.R. § 1.19) or make your position of record in the application. Alternatively, you may arrange to do any of the preceding through a registered patent attorney or agent presenting written authorization from you. If you care to join the application, counsel of record (see below) would presumably assist you. Joining in the application would entail the filing of an appropriate oath or declaration by you pursuant to 37 C.F.R. § 1.63.

Telephone inquiries regarding this communication should be directed to the undersigned at (571) 272-3205. Requests for information regarding your application should be directed to the File Information Unit at (703) 308-2733. Information regarding how to pay for and order a copy of the application, or a specific paper in the application, should be directed to Certification Division at (703) 308-9726 or 1-800-972-6382 (outside the Washington D.C. area).

Telephone inquiries regarding this matter should be directed to the undersigned at (571) 272-3205.

Alesia M. Brown
Petitions Attorney
Office of Petitions

UNITED STATES PATENT AND TRADEMARK OFFICE

Commissioner for Patents
United States Patent and Trademark Office
P.O. Box 1450
Alexandria, VA 22313-1450
www.uspto.gov

THOMAS, KAYDEN, HORSTEMEYER & RISLEY, LLP
100 GALLERIA PARKWAY, NW
STE 1750
ATLANTA, GA 30339-5948

**COPY MAILED**

AUG 0 8 2007

**OFFICE OF PETITIONS**

In re Application of :
Jong-Min Liu, et al. :
Application No. 10/954,824 : ON PETITION
Filed: September 30, 2004 :
Attorney Docket No. 250913-1360 :

This is a decision on the petition under 37 CFR 1.137(b), filed March 22, 2007, to revive the above-identified application.

The petition is **GRANTED**.

The application became abandoned for failure to timely file a reply within the meaning of 37 CFR 1.113 to the final Office action of September 5, 2006. On March 22, 2007, the present petition was filed. A Notice of Abandonment was subsequently mailed on April 13, 2007.

The proposed reply required for consideration of a petition to revive must be a Notice of Appeal (and appeal fee required by 37 CFR 41.20(b)(2), an amendment that *prima facie* places the application in condition for allowance, a Request for Continued Examination and submission (37 CFR 1.114), or the filing of a continuing application under 37 CFR 1.53(b). See MPEP 711.03(c)(III)(A)(2).

The present petition satisfies the requirements of 37 CFR 1.137(b) in that petitioner has supplied (1) the reply in the form of a Request for Continued Examination (RCE) under 37 CFR 1.114, including the fee of $790; (2) the petition fee of $1,500; and (3) an adequate statement of unintentional delay.

Extensions of time under 37 CFR 1.136 are available only if asked for prior to or with the response. In no case, however, may an applicant respond later than the maximum time period set by statute. Accordingly, if the question of abandonment arises when the provisions of 37 CFR 1.136 can no longer be used, then the application is abandoned when the unextended time for response has expired. Since, no extension of time fees are due on a petition for revival, the $1,020 extension fees are being credited to counsel's deposit account.

This application is being referred to Technology Center AU 2872 for processing of the RCE and for appropriate action by the Examiner in the normal course of business on the amendment submitted in accordance with 37 CFR 1.114.

Telephone inquiries concerning this decision should be directed to the undersigned at (571) 272-3204. Inquiries relating to further prosecution should be directed to the Technology Center.

Sherry D. Brinkley
Petitions Examiner
Office of Petitions

UNITED STATES PATENT AND TRADEMARK OFFICE

UNITED STATES DEPARTMENT OF COMMERCE
United States Patent and Trademark Office
Address: COMMISSIONER FOR PATENTS
P.O. Box 1450
Alexandria, Virginia 22313-1450
www.uspto.gov

HUNTON & WILLIAMS LLP
INTELLECTUAL PROPERTY DEPARTMENT
1900 K STREET, N.W.
SUITE 1200
WASHINGTON, DC 20006-1109

Mail Date: 04/21/2010

| | | |
|---|---|---|
| **Applicant** | : Burghard Gruning | : DECISION ON REQUEST FOR |
| **Patent Number** | : 7595181 | : RECALCULATION of PATENT |
| **Issue Date** | : 09/29/2009 | : TERM ADJUSTMENT IN VIEW |
| **Appliction No** | : 10/954,826 | : OF WYETH AND NOTICE OF INTENT TO |
| **Filed** | : 09/30/2004 | : ISSUE CERTIFICATE OF CORRECTION |
| | | : |

The Request for Recalculation is **GRANTED** to the extent indicated.

The patent term adjustment has been determined to be **824** days. The USPTO will *sua sponte* issue a certificate of correction reflecting the amount of PTA days determined by the recalculation.

Prior to the issuance of the certificate of correction, the USPTO will afford patentee an opportunity to be heard and request reconsideration. Accordingly, patentee has **one month or thirty (30) days**, whichever is longer, to file a request for reconsideration of this patent term adjustment calculation. See 35 U.S.C. 154(b)(3)(B)(ii) and 37 CFR 1.322(a)(4). No extensions of time will be granted under 37 CFR 1.136.

Patentee should use document code PET.OP if electronically filing a request for reconsideration of this patent term adjustment calculation. The patentee must also include the information required by 37 CFR 1.705(b)(2) and the fee required by 37 CFR 1.18(e). If patentee does not file a timely request for reconsideration of this patent term adjustment calculation including the information required by 37 CFR 1.705(b)(2) and the fee required by 37 CFR 1.18(e), the USPTO will issue a certificate of correction reflecting the PTA determination noted above.

Patentee should be aware that in order to preserve the right to review in the United States District Court for the District of Columbia of the USPTO patent term adjustment determination, patentee must ensure that he or she also take the steps required under 35 U.S.C. 154(b)(4)(A) in a timely manner. Nothing in the request for recalculation should be construed as providing an alternative time frame for commencing a civil action under 35 U.S.C. 154(b)(4)(A).

Any questions concerning this decision should be directed to the Office of Patent Legal Administration at 571-272-7702.

UNITED STATES PATENT AND TRADEMARK OFFICE

Commissioner for Patents
United States Patent and Trademark Office
P.O. Box 1450
Alexandria, VA 22313-1450
www.uspto.gov

BRACEWELL & PATTERSON, LLP
P.O. BOX 61389
HOUSTON, TX 77208-1389

COPY MAILED

SEP 0 2 2005

OFFICE OF PETITIONS

In re Application of :
Serge Grinberg et al :
Application No. 10/954,855 :
Filed: September 30, 2004 :
Attorney Docket No. HSJ920040137US1 :

ON PETITION

This is a decision on the petition under 37 CFR 1.137(b), filed July 28, 2005, to revive the above-identified application.

The petition is **DISMISSED.**

Any request for reconsideration of this decision must be submitted within TWO (2) MONTHS from the mail date of this decision. Extensions of time under 37 CFR 1.136(a) are permitted. The reconsideration request should include a cover letter entitled "**Renewed Petition under 37 CFR 1.137(b)**." This is **not** final agency action within the meaning of 5 U.S.C. § 704.

The above-identified application became abandoned for failure to reply in a timely manner to the Notice to File Missing Parts of Nonprovisional Application (Notice) mailed November 16, 2004. The Notice set a period for reply of two (2) months from the mail date of the Notice. No extension of time under the provisions of 37 CFR 1.136(a) were obtained. Accordingly, the above-identified application became abandoned on January 17, 2005.

A grantable petition under 37 CFR 1.137(b) must be accompanied by: (1) the required reply, unless previously filed; (2) the petition fee as set forth in 37 CFR 1.17(m); (3) a statement that the entire delay in filing the required reply from the due date for the reply until the filing of a grantable petition pursuant to 37 CFR 1.137(b) was unintentional; and (4) any terminal disclaimer (and fee as set forth in 37 CFR 1.20(d)) required by 37 CFR 1.137(c). Where there is a question as to whether either the abandonment or the delay in filing a petition under 37 CFR 1.137 was unintentional, the Commissioner may require additional information. See MPEP 711.03(c)(III)(C) and (D). The instant petition lack(s) item(s) (1).

In the instant case, there was no late filing fee or oath or declaration surcharge as set forth in 37 CFR 1.16(e) of $130 for a non-small entity. Accordingly, the petition to revive cannot be granted until the $130 surcharge is received.

Further correspondence with respect to this matter should be addressed as follows:

| | |
|---|---|
| By mail: | Mail Stop PETITIONS<br>Commissioner for Patents<br>Post Office Box 1450<br>Alexandria, VA 22313-1450 |
| By hand: | Customer Service Window<br>Randolph Building<br>401 Dulany Street<br>Alexandria, VA 22314 |
| By facsimile: | (571) 273-8300<br>ATTN: Office of Petitions |

Telephone inquiries concerning this decision should be directed to the undersigned at (571) 272-3210.

Irvin Dingle
Petitions Examiner
Office of Petitions

UNITED STATES PATENT AND TRADEMARK OFFICE

Commissioner for Patents
United States Patent and Trademark Office
P.O. Box 1450
Alexandria, VA 22313-1450
www.uspto.gov

BRACEWELL & GIULIANI LLP
P.O. BOX 61389
HOUSTON, TX 77208-1389

**COPY MAILED**

OCT 13 2005

**OFFICE OF PETITIONS**

| | | |
|---|---|---|
| In re Application of | : | |
| Serge Grinberg et al | : | |
| Application No. 10/954,855 | : | ON PETITION |
| Filed: September 30, 2004 | : | |
| Attorney Docket No. HSJ920040137US1 | : | |

This is a decision on the renewed petition under 37 CFR 1.137(b), filed September 16, 2005, to revive the above-identified application.

The petition is **GRANTED**.

Telephone inquiries concerning this decision should be directed to Irvin Dingle at (571) 272-3210.

This matter is being referred to the Initial Patent Examination Unit.

Irvin Dingle
Petitions Examiner
Office of Petitions

UNITED STATES PATENT AND TRADEMARK OFFICE

Commissioner for Patents
United States Patent and Trademark Office
P.O. Box 1450
Alexandria, VA 22313-1450
www.uspto.gov

**AKERMAN SENTERFITT**
**P.O. BOX 3188**
**WEST PALM BEACH FL 33402-3188**

COPY MAILED

MAR 1 2 2008

OFFICE OF PETITIONS

In re Application of
**ROSS,** Neil et al.
Application No. 10/954,874
Filed: September 30, 2004
Attorney Docket No. **7524-11**

DECISION ON PETITION
TO WITHDRAW
FROM RECORD

This is a decision on the Request to Withdraw as attorney or agent of record under 37 C.F.R. § 1.36(b), filed November 14, 2007.

The request is **NOT APPROVED**.

A grantable request to withdraw as attorney/agent of record must be signed by every attorney/agent seeking to withdraw or contain a clear indication that one attorney is signing on behalf of another/others. A request to withdraw will not be approved unless at least 30 (thirty) days would remain between the date of approval and the later of the expiration date of a time to file a response or the expiration date of the maximum time period which can be extended under 37 C.F.R. § 1.136(a).

The Office cannot approve the request at this time since the reasons provided do not meet any of the conditions under the mandatory or permissive categories enumerated in 37 CFR 10.40. Section 10.40 of Title 37 of the Code of Federal Regulation states, "[a] practitioner shall not withdraw from employment in a proceeding before the Office without permission from the Office[.]" More specifically, 37 CFR 10.40 states, "[i]f paragraph (b) of this section is not applicable, a practitioner may not request permission to withdraw in matter pending before the Office unless such request or such withdrawal is" for one the permissive reasons listed in 37 CFR 10.40(c). The reasons set forth in the request, filed voluntary chapter 11 petition with the United States Bankruptcy Court, does not meet any the conditions set forth in 37 CFR 10.40.

In order to request or take action in a patent matter, the assignee must establish its ownership of the patent to the satisfaction of the Director. In this regard, a Statement under 37 CFR 3.73(b) must have either: (i) documentary evidence of a chain of title from the original owner to the assignee (*e.g.*, copy of an executed assignment), and a statement affirming that the documentary evidence of the chain of title from the original owner to the assignee was or concurrently is being

submitted for recordation pursuant to § 3.11; or (ii) a statement specifying where documentary evidence of a chain of title from the original owner to the assignee is recorded in the assignment records of the Office (*e.g.*, reel and frame number).

All future communications from the Office will continue to be directed to the above-listed address until otherwise notified by applicant.

Telephone inquiries concerning this decision should be directed to Tredelle Jackson at 571-272-2783.

Tredelle D. Jackson
Petitions Examiner
Office of Petitions

cc: **ROGER LOPEZ**
**PAL LABORATORIES**
**10655 N.W. 29TH TERRACE**
**MIAMI, FL 33172**

UNITED STATES PATENT AND TRADEMARK OFFICE

Commissioner for Patents
United States Patent and Trademark Office
P.O. Box 1450
Alexandria, VA 22313-1450
www.uspto.gov

**AKERMAN SENTERFITT**
**P.O. BOX 3188**
**WEST PALM BEACH FL 33402-3188**

**COPY MAILED**

JUN 1 9 2008

**OFFICE OF PETITIONS**

| | | |
|---|---|---|
| In re Application of | : | |
| **ROSS,** Neil et al. | : | |
| Application No. 10/954,874 | : | DECISION ON PETITION |
| Filed: September 30, 2004 | : | TO WITHDRAW |
| Attorney Docket No. **7524-11** | : | FROM RECORD |
| | : | |

This is a decision on the renewed petition on the Request to Withdraw as attorney or agent of record under 37 C.F.R. § 1.36(b), filed May 12, 2008.

The request is **NOT APPROVED**.

A grantable request to withdraw as attorney/agent of record must be signed by every attorney/agent seeking to withdraw or contain a clear indication that one attorney is signing on behalf of another/others. A request to withdraw will not be approved unless at least 30 (thirty) days would remain between the date of approval and the later of the expiration date of a time to file a response or the expiration date of the maximum time period which can be extended under 37 C.F.R. § 1.136(a).

The Office cannot approve the request at this time since the reasons provided do not meet any of the conditions under the mandatory or permissive categories enumerated in 37 CFR 10.40. Section 10.40 of Title 37 of the Code of Federal Regulation states, "[a] practitioner shall not withdraw from employment in a proceeding before the Office without permission from the Office[.]" More specifically, 37 CFR 10.40 states, "[i]f paragraph (b) of this section is not applicable, a practitioner may not request permission to withdraw in matter pending before the Office unless such request or such withdrawal is" for one the permissive reasons listed in 37 CFR 10.40(c). The reasons set forth in the request, filed voluntary chapter 11 petition with the United States Bankruptcy Court, does not meet any the conditions set forth in 37 CFR 10.40.

In order to request or take action in a patent matter, the assignee must establish its ownership of the patent to the satisfaction of the Director. In this regard, a Statement under 37 CFR 3.73(b) must have either: (i) documentary evidence of a chain of title from the original owner to the assignee (*e.g.*, copy of an executed assignment), and a statement affirming that the documentary evidence of the chain of title from the original owner to the assignee was or concurrently is being

submitted for recordation pursuant to § 3.11; or (ii) a statement specifying where documentary evidence of a chain of title from the original owner to the assignee is recorded in the assignment records of the Office (*e.g.*, reel and frame number). (See Attachment)

All future communications from the Office will continue to be directed to the above-listed address until otherwise notified by applicant.

Telephone inquiries concerning this decision should be directed to Tredelle Jackson at 571-272-2783.

Tredelle D. Jackson
Petitions Examiner
Office of Petitions

cc: **ROGER LOPEZ**
**PAL LABORATORIES**
**10655 N.W. 29TH TERRACE**
**MIAMI, FL 33172**

PTO/SB/96 (01-08)
Approved for use through 06/30/2008. OMB 0651-0031
U.S. Patent and Trademark Office; U.S. DEPARTMENT OF COMMERCE
Under the Paperwork Reduction Act of 1995, no persons are required to respond to a collection of information unless it displays a valid OMB control number.

# STATEMENT UNDER 37 CFR 3.73(b)

Applicant/Patent Owner: _____

Application No./Patent No.: _____ Filed/Issue Date: _____

Entitled:

_____, a _____
(Name of Assignee) (Type of Assignee, e.g., corporation, partnership, university, government agency, etc.)

states that it is:

1. ☐ the assignee of the entire right, title, and interest; or

2. ☐ an assignee of less than the entire right, title and interest
(The extent (by percentage) of its ownership interest is _____%)

in the patent application/patent identified above by virtue of either:

A. ☐ An assignment from the inventor(s) of the patent application/patent identified above. The assignment was recorded in the United States Patent and Trademark Office at Reel _____, Frame _____, or for which a copy thereof is attached.

**OR**

B. ☐ A chain of title from the inventor(s), of the patent application/patent identified above, to the current assignee as follows:

1. From: _____ To: _____
The document was recorded in the United States Patent and Trademark Office at
Reel _____, Frame _____, or for which a copy thereof is attached.

2. From: _____ To: _____
The document was recorded in the United States Patent and Trademark Office at
Reel _____, Frame _____, or for which a copy thereof is attached.

3. From: _____ To: _____
The document was recorded in the United States Patent and Trademark Office at
Reel _____, Frame _____, or for which a copy thereof is attached.

☐ Additional documents in the chain of title are listed on a supplemental sheet.

☐ As required by 37 CFR 3.73(b)(1)(i), the documentary evidence of the chain of title from the original owner to the assignee was, or concurrently is being, submitted for recordation pursuant to 37 CFR 3.11.

[NOTE: A separate copy (*i.e.*, a true copy of the original assignment document(s)) must be submitted to Assignment Division in accordance with 37 CFR Part 3, to record the assignment in the records of the USPTO. See MPEP 302.08]

The undersigned (whose title is supplied below) is authorized to act on behalf of the assignee.

| | |
|---|---|
| Signature | Date |
| Printed or Typed Name | Telephone Number |
| Title | |

This collection of information is required by 37 CFR 3.73(b). The information is required to obtain or retain a benefit by the public which is to file (and by the USPTO to process) an application. Confidentiality is governed by 35 U.S.C. 122 and 37 CFR 1.11 and 1.14. This collection is estimated to take 12 minutes to complete, including gathering, preparing, and submitting the completed application form to the USPTO. Time will vary depending upon the individual case. Any comments on the amount of time you require to complete this form and/or suggestions for reducing this burden, should be sent to the Chief Information Officer, U.S. Patent and Trademark Office, U.S. Department of Commerce, P.O. Box 1450, Alexandria, VA 22313-1450. DO NOT SEND FEES OR COMPLETED FORMS TO THIS ADDRESS. SEND TO: **Commissioner for Patents, P.O. Box 1450, Alexandria, VA 22313-1450.**

*If you need assistance in completing the form, call 1-800-PTO-9199 and select option 2.*

# Privacy Act Statement

The **Privacy Act of 1974 (P.L. 93-579)** requires that you be given certain information in connection with your submission of the attached form related to a patent application or patent. Accordingly, pursuant to the requirements of the Act, please be advised that: (1) the general authority for the collection of this information is 35 U.S.C. 2(b)(2); (2) furnishing of the information solicited is voluntary; and (3) the principal purpose for which the information is used by the U.S. Patent and Trademark Office is to process and/or examine your submission related to a patent application or patent. If you do not furnish the requested information, the U.S. Patent and Trademark Office may not be able to process and/or examine your submission, which may result in termination of proceedings or abandonment of the application or expiration of the patent.

The information provided by you in this form will be subject to the following routine uses:

1. The information on this form will be treated confidentially to the extent allowed under the Freedom of Information Act (5 U.S.C. 552) and the Privacy Act (5 U.S.C 552a). Records from this system of records may be disclosed to the Department of Justice to determine whether disclosure of these records is required by the Freedom of Information Act.
2. A record from this system of records may be disclosed, as a routine use, in the course of presenting evidence to a court, magistrate, or administrative tribunal, including disclosures to opposing counsel in the course of settlement negotiations.
3. A record in this system of records may be disclosed, as a routine use, to a Member of Congress submitting a request involving an individual, to whom the record pertains, when the individual has requested assistance from the Member with respect to the subject matter of the record.
4. A record in this system of records may be disclosed, as a routine use, to a contractor of the Agency having need for the information in order to perform a contract. Recipients of information shall be required to comply with the requirements of the Privacy Act of 1974, as amended, pursuant to 5 U.S.C. 552a(m).
5. A record related to an International Application filed under the Patent Cooperation Treaty in this system of records may be disclosed, as a routine use, to the International Bureau of the World Intellectual Property Organization, pursuant to the Patent Cooperation Treaty.
6. A record in this system of records may be disclosed, as a routine use, to another federal agency for purposes of National Security review (35 U.S.C. 181) and for review pursuant to the Atomic Energy Act (42 U.S.C. 218(c)).
7. A record from this system of records may be disclosed, as a routine use, to the Administrator, General Services, or his/her designee, during an inspection of records conducted by GSA as part of that agency's responsibility to recommend improvements in records management practices and programs, under authority of 44 U.S.C. 2904 and 2906. Such disclosure shall be made in accordance with the GSA regulations governing inspection of records for this purpose, and any other relevant (*i.e.*, GSA or Commerce) directive. Such disclosure shall not be used to make determinations about individuals.
8. A record from this system of records may be disclosed, as a routine use, to the public after either publication of the application pursuant to 35 U.S.C. 122(b) or issuance of a patent pursuant to 35 U.S.C. 151. Further, a record may be disclosed, subject to the limitations of 37 CFR 1.14, as a routine use, to the public if the record was filed in an application which became abandoned or in which the proceedings were terminated and which application is referenced by either a published application, an application open to public inspection or an issued patent.
9. A record from this system of records may be disclosed, as a routine use, to a Federal, State, or local law enforcement agency, if the USPTO becomes aware of a violation or potential violation of law or regulation.

UNITED STATES PATENT AND TRADEMARK OFFICE

UNITED STATES DEPARTMENT OF COMMERCE
United States Patent and Trademark Office
Address: COMMISSIONER FOR PATENTS
P.O. Box 1450
Alexandria, Virginia 22313-1450
www.uspto.gov

PEARNE & GORDON LLP
1801 EAST 9TH STREET
SUITE 1200
CLEVELAND, OH 44114-3108

Mail Date: 04/21/2010

| | | |
|---|---|---|
| **Applicant** | : Kazuhiko Matsumoto | : DECISION ON REQUEST FOR |
| **Patent Number** | : 7647593 | : RECALCULATION of PATENT |
| **Issue Date** | : 01/12/2010 | : TERM ADJUSTMENT IN VIEW |
| **Appliction No** | : 10/954,876 | : OF WYETH AND NOTICE OF INTENT TO |
| **Filed** | : 09/30/2004 | : ISSUE CERTIFICATE OF CORRECTION |
| | | : |

The Request for Recalculation is **GRANTED** to the extent indicated.

The patent term adjustment has been determined to be **1504** days. The USPTO will *sua sponte* issue a certificate of correction reflecting the amount of PTA days determined by the recalculation.

Prior to the issuance of the certificate of correction, the USPTO will afford patentee an opportunity to be heard and request reconsideration. Accordingly, patentee has **one month or thirty (30) days**, whichever is longer, to file a request for reconsideration of this patent term adjustment calculation. See 35 U.S.C. 154(b)(3)(B)(ii) and 37 CFR 1.322(a)(4). No extensions of time will be granted under 37 CFR 1.136.

Patentee should use document code PET.OP if electronically filing a request for reconsideration of this patent term adjustment calculation. The patentee must also include the information required by 37 CFR 1.705(b)(2) and the fee required by 37 CFR 1.18(e). If patentee does not file a timely request for reconsideration of this patent term adjustment calculation including the information required by 37 CFR 1.705(b)(2) and the fee required by 37 CFR 1.18(e), the USPTO will issue a certificate of correction reflecting the PTA determination noted above.

Patentee should be aware that in order to preserve the right to review in the United States District Court for the District of Columbia of the USPTO patent term adjustment determination, patentee must ensure that he or she also take the steps required under 35 U.S.C. 154(b)(4)(A) in a timely manner. Nothing in the request for recalculation should be construed as providing an alternative time frame for commencing a civil action under 35 U.S.C. 154(b)(4)(A).

Any questions concerning this decision should be directed to the Office of Patent Legal Administration at 571-272-7702.

UNITED STATES PATENT AND TRADEMARK OFFICE

Commissioner for Patents
United States Patent and Trademark Office
P.O. Box 1450
Alexandria, VA 22313-1450
www.uspto.gov

**MORRISON & FOERSTER, LLP**
**555 WEST FIFTH STREET**
**SUITE 3500**
**LOS ANGELES, CA 90013-1024**

COPY MAILED
DEC 1 1 2006
OFFICE OF PETITIONS

| | | |
|---|---|---|
| In re Application of | : | |
| BECKHAM | : | |
| Application No. 10/954,886 | : | DECISION ON REQUEST FOR |
| Filed: September 30, 2004 | : | REVOCATION OF POWER |
| Attorney Docket No. 297912006403 | : | OF ATTORNEY |
| | : | |

This is a decision on the Request to Revoke the attorney or agent of record under 37 C.F.R. § 1.36(a), filed November 28, 2006.

The request is **NOT APPROVED**.

A power of attorney, pursuant to § 1.32(b), may be revoked at any stage in the proceeding of a case by an applicant for patent (§ 1.41(b)) or an assignee of the entire interest of the applicant under § 3.71(b). Fewer than all of the applicants (or by fewer than the assignee of the entire interest of the applicant) may only revoke the power of attorney upon a showing of sufficient cause, and payment of the petition fee set forth § 1.17(h). For the assignee to take action a proper statement under § 3.73(b) is required.

The request cannot be approved because the assignee must establish its ownership of the patent to the satisfaction of the Director. In this regard, a Statement under 37 CFR 3.73(b) must have either: (i) documentary evidence of a chain of title from the original owner to the assignee (*e.g.*, copy of an executed assignment), and a statement affirming that the documentary evidence of the chain of title from the original owner to the assignee was or concurrently is being submitted for recordation pursuant to § 3.11; or (ii) a statement specifying where documentary evidence of a chain of title from the original owner to the assignee is recorded in the assignment records of the Office (*e.g.*, reel and frame number). The power of attorney filed on November 28, 2006 does not include one of the above two options.

All future communications from the Office will continue to be directed to the above-listed address until otherwise notified by applicant.

Telephone inquiries concerning this decision should be directed to the undersigned at 571-272-6825.

Patricia Volpe
Petitions Examiner
Office of Petitions

cc: **PROSKAUER ROSE LLP**
**1001 PENNSYLVANIA AVE, N.W.,**
**SUITE 400 SOUTH**
**WASHINGTON, DC 20004**

UNITED STATES PATENT AND TRADEMARK OFFICE

Commissioner for Patents
United States Patent and Trademark Office
P.O. Box 1450
Alexandria, VA 22313-1450
www.uspto.gov

**MORRISON & FOERSTER, LLP**
**555 WEST FIFTH STREET**
**SUITE 3500**
**LOS ANGELES, CA 90013-1024**

COPY MAILED

DEC 1 1 2006

OFFICE OF PETITIONS

| | | |
|---|---|---|
| In re Application of | : | |
| BECKHAM | : | |
| Application No. 10/954,886 | : | DECISION ON PETITION |
| Filed: September 30, 2004 | : | TO WITHDRAW |
| Attorney Docket No. 297912006403 | : | FROM RECORD |
| | : | |

This is a decision on the Request to Withdraw as attorney or agent of record under 37 C.F.R. § 1.36(b), filed September 26, 2006.

The request is **NOT APPROVED**.

A grantable request to withdraw as attorney/agent of record must be signed by every attorney/agent seeking to withdraw or contain a clear indication that one attorney is signing on behalf of another/others. A request to withdraw will not be approved unless at least 30 (thirty) days would remain between the date of approval and the later of the expiration date of a time to file a response or the expiration date of the maximum time period which can be extended under 37 C.F.R. § 1.136(a).

The Office cannot approve the request at this time since the reasons provided do not meet any of the conditions under the mandatory or permissive categories enumerated in 37 CFR 10.40. Section 10.40 of Title 37 of the Code of Federal Regulation states, "[a] practitioner shall not withdraw from employment in a proceeding before the Office without permission from the Office[.]" More specifically, 37 CFR 10.40 states, "[i]f paragraph (b) of this section is not applicable, a practitioner may not request permission to withdraw in matter pending before the Office unless such request or such withdrawal is" for one the permissive reasons listed in 37 CFR 10.40(c). While the reasons may be provided by referencing a specific portion of 37 CFR 10.40, the reasons must deal with actions by the client. The reasons set forth in the request, "Application being handled by another firm," do not meet any conditions set forth in 37 CFR 1040.

All future communications from the Office will continue to be directed to the above-listed address until otherwise properly notified by the applicant.

There is no outstanding Office action that requires a reply from the applicant.

Telephone inquiries concerning this decision should be directed to the undersigned at 571-272-6825.

Patricia Volpe
Petitions Examiner
Office of Petitions

cc: **PROSKAUER ROSE LLP**
**1001 PENNSYLVANIA AVE.**
**SUITE 400 SOUTH**
**WASHINGTON, DC 20004**

UNITED STATES PATENT AND TRADEMARK OFFICE

Commissioner for Patents
United States Patent and Trademark Office
P.O. Box 1450
Alexandria, VA 22313-1450
www.uspto.gov

**Morrison & Foerster, LLP**
**555 West Fifth Street**
**Suite 3500**
**Los Angeles, CA 90013-1024**

COPY MAILED

JUN 0 2 2008

OFFICE OF PETITIONS

| | | |
|---|---|---|
| In re Application of | : | |
| Jim Beckham | : | |
| Application No. 10/954,886 | : | DECISION ON PETITION |
| Filed: September 30, 2004 | : | TO WITHDRAW |
| Attorney Docket No. 297912006403 | : | FROM RECORD |
| | : | |

This is a decision on the Request to Withdraw as attorney or agent of record under 37 C.F.R. § 1.36(b), filed April 22, 2008.

The request is **APPROVED**.

A grantable request to withdraw as attorney/agent of record must be signed by every attorney/agent seeking to withdraw or contain a clear indication that one attorney is signing on behalf of another/others. A request to withdraw will not be approved unless at least 30 (thirty) days would remain between the date of approval and the later of the expiration date of a time to file a response or the expiration date of the maximum time period which can be extended under 37 C.F.R. § 1.136(a).

The request was signed by Vincent J. Belusko on behalf of all attorneys/agents of record. All attorneys/agents of record have been withdrawn.

The request to change the correspondence of record is not acceptable as the requested correspondence address is not that of (1) the first named signing inventor; or (2) an intervening assignee of the entire interest under 37 C.F.R. 3.71. Accordingly, all correspondence will be mailed to the applicant since no assignee has properly intervened in this application. A courtesy copy of this decision will be mailed to address noted on the request to withdraw. If this firm desires to receive future correspondence regarding this application, the proper power of attorney documents must be submitted.

Telephone inquiries concerning this decision should be directed to Kimberly Inabinet at 571-272-4618.

Kimberly Inabinet
Petitions Examiner
Office of Petitions

cc: Todd W. Wight
Rutan & Tucker, LLP
611 Anton Boulevard
Suite 1400
Athens, TX 75751

cc: Jim Beckham
218 Colonial Circle
Athens, TX 75751

UNITED STATES PATENT AND TRADEMARK OFFICE

UNITED STATES DEPARTMENT OF COMMERCE
United States Patent and Trademark Office
Address: COMMISSIONER FOR PATENTS
P.O. Box 1450
Alexandria, Virginia 22313-1450
www.uspto.gov

| APPLICATION NUMBER | FILING OR 371(C) DATE | FIRST NAMED APPLICANT | ATTY. DOCKET NO./TITLE |
|---|---|---|---|
| 10/954,886 | 09/30/2004 | Jim Beckham | 297912006403 |

**CONFIRMATION NO. 2891**

**POWER OF ATTORNEY NOTICE**

25224
MORRISON & FOERSTER, LLP
555 WEST FIFTH STREET
SUITE 3500
LOS ANGELES, CA 90013-1024

*OC000000030238398*

Date Mailed: 06/02/2008

## NOTICE REGARDING CHANGE OF POWER OF ATTORNEY

This is in response to the Power of Attorney filed 04/22/2008.

- The withdrawal as attorney in this application has been accepted. Future correspondence will be mailed to the new address of record. 37 CFR 1.33.

/kainabinet/

---

Office of Data Management, Application Assistance Unit (571) 272-4000, or (571) 272-4200, or 1-888-786-0101

UNITED STATES PATENT AND TRADEMARK OFFICE

Commissioner for Patents
United States Patent and Trademark Office
P.O. Box 1450
Alexandria, VA 22313-1450
www.uspto.gov

FAY SHARPE LLP
1100 SUPERIOR AVENUE, SEVENTH FLOOR
CLEVELAND OH 44114

**COPY MAILED**

NOV 13 2007

**OFFICE OF PETITIONS**

| | | |
|---|---|---|
| In re Application of | : | |
| Bartoli, et al. | : | |
| Application No. 10/954,891 | : | DECISION ON PETITION |
| Filed: September 30, 2004 | : | UNDER 37 CFR 1.137(b) |
| Attorney Docket No. RIDS 2 00005 | : | |

This is a decision on the petition, filed April 23, 2007 (certificate of mailing date April 19, 2007), which is being treated as a petition under 37 CFR 1.137(b) to revive the instant nonprovisional application for failure to timely notify the U.S. Patent and Trademark (USPTO) of the filing of an application in a foreign country, or under a multinational treaty that requires publication of applications eighteen months after filing. *See* 37 CFR 1.137(f).

The petition is **GRANTED**.

Petitioner states that the instant nonprovisional application is the subject of an application filed in an eighteen-month publication country on September 30, 2005. However, the USPTO was unintentionally not notified of this filing within 45 days subsequent to the filing of the subject application in an eighteen-month publication country.

In view of the above, this application became abandoned pursuant to 35 U.S.C. § 122(b)(2)(B)(iii) and 37 CFR 1.213(c) for failure to timely notify the Office of the filing of an application in a foreign country or under a multilateral international agreement that requires publication of applications 18 months after filing.

A petition to revive an application abandoned pursuant to 35 U.S.C. 122(b)(2)(B)(iii) for failure to notify the USPTO of a foreign filing must be accompanied by:

(1) the required reply which is met by the notification of such filing in a foreign country or under a multinational treaty;
(2) the petition fee as set forth in 37 CFR 1.17(m); and
(3) a statement that the entire delay in filing the required reply from the due date of the reply until the filing of a grantable petition was unintentional.

The instant petition has been found to be in compliance with 37 CFR 1.137(b). Accordingly, the failure to timely notify the USPTO of a foreign or international filing within 45 days after the date of filing of such foreign or international application as provided by 35 U.S.C. § 122(b)(2)(B)(iii) and 37 CFR 1.213(c) is accepted as having been unintentionally delayed.

The previous Request and Certification under 35 U.S.C. § 122(b)(2)(B)(i) has been rescinded. A Communication Regarding Rescission of Nonpublication Request and/or Notice of Foreign Filing which sets forth the projected publication date of February 14, 2008 accompanies this decision on petition.

Telephone inquiries concerning this decision should be directed to the undersigned at (571) 272-3230.

This application is being returned to Technology Center Art Unit 2856 for consideration of the amendment after final filed on August 2, 2007 and the Notice of Appeal, filed November 5, 2007.

Shirene Willis Brantley

Shirene Willis Brantley
Senior Petitions Attorney
Office of Petitions

ATTACHMENT: Communication Regarding Rescission of Nonpublication Request and/or Notice of Foreign Filing

UNITED STATES PATENT AND TRADEMARK OFFICE

UNITED STATES DEPARTMENT OF COMMERCE
United States Patent and Trademark Office
Address: COMMISSIONER FOR PATENTS
P.O. Box 1450
Alexandria, Virginia 22313-1450
www.uspto.gov

| APPLICATION NUMBER | FILING OR 371(C) DATE | FIRST NAMED APPLICANT | ATTY. DOCKET NO./TITLE |
|---|---|---|---|
| 10/954,891 | 09/30/2004 | Daniel George Bartoli | RIDM 2 00005 |

**CONFIRMATION NO. 2911**

27885
FAY SHARPE LLP
1100 SUPERIOR AVENUE, SEVENTH FLOOR
CLEVELAND, OH 44114

**NONPUBLICATION RESCISSION LETTER**

*OC000000026662708*

Date Mailed: 11/08/2007

## Communication Regarding Rescission Of Nonpublication Request and/or Notice of Foreign Filing

Applicant's rescission of the previously-filed nonpublication request and/or notice of foreign filing is acknowledged. The paper has been reflected in the Patent and Trademark Office's (USPTO's) computer records so that the earliest possible projected publication date can be assigned.

The projected publication date is 02/14/2008.

If applicant rescinded the nonpublication request before or on the date of "foreign filing,"[1] then no notice of foreign filing is required.

If applicant foreign filed the application after filing the above application and before filing the rescission, and the rescission did not also include a notice of foreign filing, then a notice of foreign filing (not merely a rescission) is required to be filed within 45 days of the date of foreign filing. See 35 U.S.C. § 122(b)(2)(B)(iii), and Clarification of the United States Patent and Trademark Office's Interpretation of the Provisions of 35 U.S.C. § 122(b)(2)(B)(ii)-(iv), 1272 Off. Gaz. Pat. Office 22 (July 1, 2003).

If a notice of foreign filing is required and is not filed within 45 days of the date of foreign filing, then the application becomes abandoned pursuant to 35 U.S.C. § 122(b)(2)(B)(iii). In this situation, applicant should either file a petition to revive or notify the Office that the application is abandoned. See 37 CFR 1.137(f). Any such petition to revive will be forwarded to the Office of Petitions for a decision. Note that the filing of the petition will not operate to stay any period of reply that may be running against the application.

Questions regarding petitions to revive should be directed to the Office of Petitions at (571) 272-3282. Questions regarding publications of patent applications should be directed to the patent application publication hotline at (703) 605-4283 or by e-mail pgpub@uspto.gov.

[1] Note, for purpose of this notice, that "foreign filing" means "filing an application directed to the same invention in another country, or under a multilateral international agreement, that requires publication of applications 18 months after filing".

UNITED STATES PATENT AND TRADEMARK OFFICE

Commissioner for Patents
United States Patent and Trademark Office
P.O. Box 1450
Alexandria, VA 22313-1450
www.uspto.gov

**PERKINS COIE LLP**
**PATENT SEA**
**P.O. BOX 1247**
**SEATTLE WA 98111**

COPY MAILED

MAR 1 2 2008

OFFICE OF PETITIONS

| | | |
|---|---|---|
| In re Application of | : | |
| **LAUFER,** Michael D. et al. | : | |
| Application No. 10/954,895 | : | DECISION ON PETITION |
| Filed: September 30, 2004 | : | TO WITHDRAW |
| Attorney Docket No. **649218032US01** | : | FROM RECORD |
| | : | |

This is a decision on the Request to Withdraw as attorney or agent of record under 37 C.F.R. § 1.36(b), filed November 16, 2007.

The request is **MOOT** because a revocation of power of attorney has been previously filed.

A review of the file record indicates that the power of attorney to PERKINS COIE LLP has been revoked by the assignee of the patent application on December 12, 2007. Accordingly, the request to withdraw under 37 C.F.R. § 1.36(b) is moot.

All future communications from the Office will continue to be directed to the below-listed address until otherwise notified by applicant.

Telephone inquires concerning this decision should be directed to Tredelle Jackson at 571-272-2783.

Monica A. Graves
Petitions Examiner
Office of Petitions

cc: **PERKINS COIE LLP**
**PATENT SEA**
**P.O. BOX 1247**
**SEATTLE, WA 98111**

UNITED STATES PATENT AND TRADEMARK OFFICE

Commissioner for Patents
United States Patent and Trademark Office
P.O. Box 1450
Alexandria, VA 22313-1450
www.uspto.gov

**SABIC - O8CV - CPP**
**SABIC Innovative Plastics - IP Legal**
**ONE PLASTICS AVENUE**
**PITTSFIELD MA 01201-3697**

**COPY MAILED**

SEP 1 0 2008

**OFFICE OF PETITIONS**

| | | |
|---|---|---|
| In re Application of | : | |
| Gerrit De Wit et al. | : | |
| Application No. 10/954,898 | : | DECISION ON PETITION |
| Filed: September 30, 2004 | : | |
| Attorney Docket No. 125555-1 | : | |

This is a decision on the petition under the unintentional provisions of 37 CFR 1.137(b), filed July 10, 2008 to revive the above-identified application.

The petition is **GRANTED**.

This application became abandoned for failure to timely pay the issue and publication fees on or before July 7, 2008, as required by the Notice of Allowance and Fee(s) Due, mailed April 7, 2008. Accordingly, the date of abandonment of this application is July 8, 2008.

The petition satisfies the requirements of 37 CFR 1.137(b) in that petitioner has supplied (1) the reply in the form of payment of the issue fee of $1440.00 and the publication fee of $300.00, (2) the petition fee of $1540.00; and (3) a proper statement of unintentional delay.

It is not apparent whether the person signing the statement of unintentional delay was in a position to have firsthand knowledge of the facts and circumstances of the delay at issue. Nevertheless, such statement is being treated as having been made as a result of a reasonable inquiry into the facts and circumstances of such delay. See 37 CFR 10.18(b) and Changes to Patent Practice and Procedure; Final Rule Notice, 62 Fed. Reg. 53131, 53178 (October 10, 1997), 1203 Off. Gaz. Pat. Office 63, 103 (October 21, 1997). In the event such an inquiry has not been made, petitioner must make such an inquiry. If such inquiry results in the discovery that it is not correct that the entire delay in filing the required reply from the due date for the reply until the filing of a grantable petition pursuant to 37 CFR 1.137(b) was unintentional, petitioner must notify the Office.

Telephone inquiries concerning this decision should be directed to Phyllis Spivack or in her absence, the undersigned at (571)272-7099.

This application is being referred to the Office of Data Management for processing into a patent.

David Bucci
Petitions Examiner
Office of Petitions

UNITED STATES PATENT AND TRADEMARK OFFICE

UNITED STATES DEPARTMENT OF COMMERCE
United States Patent and Trademark Office
Address: COMMISSIONER FOR PATENTS
P.O. Box 1450
Alexandria, Virginia 22313-1450
www.uspto.gov

Microsoft Corporation
One Microsoft Way
Redmond, WA 98052

Mail Date: 04/21/2010

| | | |
|---|---|---|
| **Applicant** | : Timothy Fulton Park | : DECISION ON REQUEST FOR |
| **Patent Number** | : 7584245 | : RECALCULATION of PATENT |
| **Issue Date** | : 09/01/2009 | : TERM ADJUSTMENT IN VIEW |
| **Appliction No** | : 10/954,936 | : OF WYETH AND NOTICE OF INTENT TO |
| **Filed** | : 09/29/2004 | : ISSUE CERTIFICATE OF CORRECTION |
| | | : |

The Request for Recalculation is **GRANTED** to the extent indicated.

The patent term adjustment has been determined to be **1136** days. The USPTO will *sua sponte* issue a certificate of correction reflecting the amount of PTA days determined by the recalculation.

Prior to the issuance of the certificate of correction, the USPTO will afford patentee an opportunity to be heard and request reconsideration. Accordingly, patentee has **one month or thirty (30) days**, whichever is longer, to file a request for reconsideration of this patent term adjustment calculation. See 35 U.S.C. 154(b)(3)(B)(ii) and 37 CFR 1.322(a)(4). No extensions of time will be granted under 37 CFR 1.136.

Patentee should use document code PET.OP if electronically filing a request for reconsideration of this patent term adjustment calculation. The patentee must also include the information required by 37 CFR 1.705(b)(2) and the fee required by 37 CFR 1.18(e). If patentee does not file a timely request for reconsideration of this patent term adjustment calculation including the information required by 37 CFR 1.705(b)(2) and the fee required by 37 CFR 1.18(e), the USPTO will issue a certificate of correction reflecting the PTA determination noted above.

Patentee should be aware that in order to preserve the right to review in the United States District Court for the District of Columbia of the USPTO patent term adjustment determination, patentee must ensure that he or she also take the steps required under 35 U.S.C. 154(b)(4)(A) in a timely manner. Nothing in the request for recalculation should be construed as providing an alternative time frame for commencing a civil action under 35 U.S.C. 154(b)(4)(A).

Any questions concerning this decision should be directed to the Office of Patent Legal Administration at 571-272-7702.

UNITED STATES PATENT AND TRADEMARK OFFICE

Commissioner for Patents
United States Patent and Trademark Office
P.O. Box 1450
Alexandria, VA 22313-1450
www.uspto.gov

**ROGITZ & ASSOCIATES**
**750 B STREET**
**SUITE 3120**
**SAN DIEGO CA 92101**

**COPY MAILED**

AUG 0 3 2007

**OFFICE OF PETITIONS**

| | | |
|---|---|---|
| In re Application of | : | |
| Gill et al. | : | |
| Application No. 10/954,937 | : | ON PETITION |
| Filed: September 30, 2004 | : | |
| Attorney Docket No. ARC920040081US1 | : | |

This is a decision on the petition under 37 C.F.R. § 1.137(b), filed July 18, 2007, to revive the above-identified application.

The petition is **GRANTED.**

The petition satisfies the conditions for revival pursuant to the provisions of 37 CFR 1.137(b) in that (1) the reply in the form of an Amendment; (2) the petition fee; and (3) the required statement of unintentional delay have been received. Accordingly, the response has been accepted as having been unintentionally delayed.

This matter is being referred to Technology Center 2100 for further examination on the merits.

Telephone inquiries regarding this decision should be directed to the undersigned at (571) 272-3206.

Liana Walsh
Petitions Examiner
Office of Petitions

UNITED STATES PATENT AND TRADEMARK OFFICE

Commissioner for Patents
United States Patent and Trademark Office
P.O. Box 1450
Alexandria, VA 22313-1450
www.uspto.gov

IBM Corporation
c/o Sally Redfern
2455 South Road, P369
Poughkeepsie, NY 12601

**COPY MAILED**

NOV 0 5 2008

**OFFICE OF PETITIONS**

| | | |
|---|---|---|
| In re Application of | : | |
| Binny Sher Gill et al. | : | |
| Application No. 10/954,937 | : | DECISION ON PETITION |
| Filed: September 30, 2004 | : | |
| Attorney Docket No. ARC920040081US1 | : | |

This is a decision on the petition under the unintentional provisions of 37 CFR 1.137(b) to revive the above-identified application and under 37 CFR 1.181 (no fee) requesting withdrawal of the holding of abandonment, filed August 21, 2008.

The petition under 37 CFR 1.137(b) is **GRANTED**.

This application became abandoned for failure to timely pay the issue and publication fees on or before July 21, 2008, as required by the Notice of Allowance and Fee(s) Due, mailed April 21, 2008. Accordingly, the date of abandonment of this application is July 22, 2008.

The petition satisfies the requirements of 37 CFR 1.137(b) in that petitioner has supplied (1) the reply in the form of payment of the issue fee of $1440.00 and the publication fee of $300.00, (2) the petition fee of $1540.00; and (3) a proper statement of unintentional delay.

**DISCUSSION OF PETITION TO WITHDRAW THE HOLDING OF ABANDONMENT**

Applicants contend that the Notice of Allowance (Notice) mailed April 21, 2008, was not received. Applicants have included as evidence, a copy of a page from the calendaring (i.e. docketing) system that allegedly shows a lack of receipt of the Notice.

A review of the Office records indicates no irregularity in the mailing of the Notice of Allowance and in the absence of any irregularity, there is a strong presumption that the Notice of Allowance was properly mailed to the practitioner at the address of record. This presumption may be overcome by a showing that the Notice of Allowance was not in fact received. In this regard, the

received. In this regard, the showing required to establish the failure to receive the Notice of Allowance must consist of the following:

1. a statement from practitioner stating that the Notice was not received by the practitioner;
2. a statement from the practitioner attesting to the fact that a search of the file jacket and docket records indicates that the Notice was not received; and
3. a copy of the docket record where the nonreceived Notice would have been entered and docketed had it been received must be attached to and referenced in the practitioner'statement.

*See* MPEP § 711.03(c) under subheading "Petition to Withdraw Holding of Abandonment Based on Failure to Receive Office Action," and "Withdrawing the Holding of Abandonment When Office Actions Are Not Received," 1156 Official Gazette 53 (November 16, 1993).

The petition fails to satisfy at least item (3) in the above-stated requirements. In this regard, it is noted that in the evidence submitted there is no indication or showing where the instant application having the docket no. "ARC920040081US1" would have been entered and docketed. Therefore, absent the required evidence to establish nonreceipt of the Notice of Allowance, the petition requesting withdrawal of the holding of abandonment cannot be granted at this time.

The application file does not indicate a change of address has been filed in this case, although the address given on the petition differs from the address of record. A change of address should be filed in this case in accordance with MPEP 601.03. A courtesy copy of this decision is being mailed to the address noted on the petition. However, until otherwise instructed, all future correspondence regarding this application will be mailed solely to the address of record.

Telephone inquiries concerning this decision should be directed to JoAnne Burke at (571) 272-4584.

This application is being referred to the Office of Data Management for processing into a patent.

Ramesh Krishnamurthy

Ramesh Krishnamurthy
Petitions Examiner
Office of Petitions

PTO/SB/47 (09-06)
Approved for use through 04/30/2009. OMB 0651-0016
U.S. Patent and Trademark Office; U. S. DEPARTMENT OF COMMERCE
Under the Paperwork Reduction Act of 1995, no persons are required to respond to a collection of information unless it displays a valid OMB control number.

# "FEE ADDRESS" INDICATION FORM

**Address to:**
**Mail Stop M Correspondence**
**Commissioner for Patents**
**P.O. Box 1450**
**Alexandria, VA 22313-1450**

**- OR -**

**Fax to:**
**571-273-6500**

**INSTRUCTIONS:** The issue fee must have been paid for application(s) listed on this form. In addition, only an address represented by a Customer Number can be established as the fee address for maintenance fee purposes (hereafter, fee address). A fee address should be established when correspondence related to maintenance fees should be mailed to a different address than the correspondence address for the application. **When to check the first box below:** If you have a Customer Number to represent the fee address. **When to check the second box below:** If you have no Customer Number representing the desired fee address, in which case a completed Request for Customer Number (PTO/SB/125) must be attached to this form. For more information on Customer Numbers, see the Manual of Patent Examining Procedure (MPEP) § 403.

For the following listed application(s), please recognize as the "Fee Address" under the provisions of 37 CFR 1.363 the address associated with:

☑ Customer Number: 22032

address changed

*OR*

☐ The attached Request for Customer Number (PTO/SB/125) form.

| PATENT NUMBER (if known) | APPLICATION NUMBER |
|---|---|
| | 10/954,937 |

Completed by (check one):

☐ Applicant/Inventor

Signature

☑ Attorney or Agent of record 33,549 (Reg. No.)

JOHN L. ROGITZ
Typed or printed name

☐ Assignee of record of the entire interest. See 37 CFR 3.71. Statement under 37 CFR 3.73(b) is enclosed. (Form PTO/SB/96)

(619) 338-8075
Requester's telephone number

☐ Assignee recorded at Reel _____ Frame _____

August 20, 2008
Date

NOTE: Signatures of all the inventors or assignees of record of the entire interest or their representative(s) are required. Submit multiple forms if more that one signature is required, see below*.

☑ * Total of 1 forms are submitted.

This collection of information is required by 37 CFR 1.363. The information is required to obtain or retain a benefit by the public which is to file (and by the USPTO to process) an application. Confidentiality is governed by 35 U.S.C. 122 and 37 CFR 1.11 and 1.14. This collection is estimated to take 5 minutes to complete, including gathering, preparing, and submitting the completed application form to the USPTO. Time will vary depending upon the individual case. Any comments on the amount of time you require to complete this form and/or suggestions for reducing this burden, should be sent to the Chief Information Officer, U.S. Patent and Trademark Office, U.S. Department of Commerce, P.O. Box 1450, Alexandria, VA 22313-1450. DO NOT SEND COMPLETED FORMS TO THIS ADDRESS. SEND TO: **Mail Stop M Correspondence, Commissioner for Patents, P.O. Box 1450, Alexandria, VA 22313-1450.**
*If you need assistance in completing the form, call 1-800-PTO-9199 and select option 2.*

THE UNITED STATES PATENT AND TRADEMARK OFFICE

| | | |
|---|---|---|
| First Named Applicant: Gill | ) | Art Unit: 2185 |
| Serial No.: 10/954,937 | ) | Examiner: Yu |
| Filed: September 30, 2004 | ) | **ARC920040081US1** |
| For: **SYSTEM AND METHOD FOR DYNAMIC SIZING OF CACHE SEQUENTIAL LIST** | ) | August 21, 2008<br>750 B Street, Suite 3120<br>San Diego, CA 92101 |

**PETITION FOR REVIVAL OF AN APPLICATION FOR PATENT ABANDONED UNINTENTIONALLY UNDER 37 CFR 1.137(b)**

Commissioner for Patents
Alexandria, VA

Dear Sir:

In response to the Notice of Abandonment dated August 15, 2008, Applicant respectfully petitions that the instant application be revived. The Commissioner is authorized to charge deposit account no. 09-0441 in the amount of $1540 to cover the petition fee paid herewith via EFS.

The Notice of Abandonment is based on Applicant's failure to timely pay the issue fee and publication fee. The Commissioner is authorized to charge deposit account no. 09-0441 in the amount of $1440 to cover the issue fee when the Petition is approved. The Commissioner is authorized to charge deposit account no. 09-0441 in the amount of $300 for the publication fee paid herewith via EFS.

**REQUEST FOR REFUND OF PETITION FEE**

The Notice of Allowance dated April 21, 2008 was not received at the correspondence address of record, and a search of our records, including the file jacket and application contents indicates that in fact the Notice of Allowance was never received. Enclosed is a page from the calendaring system showing that

the due date for payment of the issue fee and publication fee is not listed, as it would have been had the Notice of Allowance been received.

Upon receipt at the correspondence address of record of an actionable U.S. Patent Office matter i.e. Office Action, Notice of Allowance etc., the correspondence is reviewed, docketed on a master list (see the enclosed page from docket) and entered into a computerized calendaring system. The calendaring system is reviewed on a daily and weekly basis by two individuals. The calendared items are then double checked by the administrator. Since the Notice of Allowance was never received and the calendaring system in place is sufficient and reliable, Applicant respectfully requests a refund of the Petition to Revive fee.

Respectfully submitted,

John L. Rogitz
Registration No. 33,549
Attorney of Record
750 B Street, Suite 3120
San Diego, CA 92101
Telephone: (619) 338-8075

PTO/SB/64 (08-08)
Approved for use through 08/31/2008. OMB 0651-0031
U.S. Patent and Trademark Office; U.S. DEPARTMENT OF COMMERCE
Under the Paperwork Reduction Act of 1995, no persons are required to respond to a collection of information unless it displays a valid OMB control number.

# PETITION FOR REVIVAL OF AN APPLICATION FOR PATENT ABANDONED UNINTENTIONALLY UNDER 37 CFR 1.137(b)

Docket Number (Optional) ARC920040081US1

First named inventor: Binny Sher Gill

Application No.: 10/954,937 Art Unit: 2185

Filed: September 30, 2004 Examiner: Jae Un Yu

Title: System and Method for Dynamic Sizing of Cache Sequential List

Attention: Office of Petitions
**Mail Stop Petition**
Commissioner for Patents
P.O. Box 1450
Alexandria, VA 22313-1450
FAX (571) 273-8300

NOTE: If information or assistance is needed in completing this form, please contact Petitions Information at (571) 272-3282.

The above-identified application became abandoned for failure to file a timely and proper reply to a notice or action by the United States Patent and Trademark Office. The date of abandonment is the day after the expiration date of the period set for reply in the office notice or action plus an extensions of time actually obtained.

APPLICANT HEREBY PETITIONS FOR REVIVAL OF THIS APPLICATION

NOTE: A grantable petition requires the following items:
(1) Petition fee;
(2) Reply and/or issue fee;
(3) Terminal disclaimer with disclaimer fee - required for all utility and plant applications filed before June 8, 1995; and for all design applications; and
(4) Statement that the entire delay was unintentional.

1. Petition fee

☐ Small entity-fee $ _____ (37 CFR 1.17(m)). Applicant claims small entity status. See 37 CFR 1.27.

☑ Other than small entity – fee $ 1540 (37 CFR 1.17(m))

2. Reply and/or fee

A. The reply and/or fee to the above-noted Office action in the form of _____(identify type of reply):

☐ has been filed previously on _____.
☐ is enclosed herewith.

B. The issue fee and publication fee (if applicable) of $ 1740.

☐ has been paid previously on _____.
☑ is enclosed herewith.



This collection of information is required by 37 CFR 1.137(b). The information is required to obtain or retain a benefit by the public which is to file (and by the USPTO to process) an application. Confidentiality is governed by 35 U.S.C. 122 and 37 CFR 1.11 and 1.14. This collection is estimated to take 1.0 hour to complete, including gathering, preparing, and submitting the completed application form to the USPTO. Time will vary depending upon the individual case. Any comments on the amount of time you require to complete this form and/or suggestions for reducing this burden, should be sent to the Chief Information Officer, U.S. Patent and Trademark Office, U.S. Department of Commerce, P.O. Box 1450, Alexandria, VA 22313-1450. DO NOT SEND FEES OR COMPLETED FORMS TO THIS ADDRESS. SEND TO: Mail Stop Petition, Commissioner for Patents, P.O. Box 1450, Alexandria, VA 22313-1450.

*If you need assistance in completing the form, call 1-800-PTO-9199 and select option 2.*

Under the Paperwork Reduction Act of 1995, no persons are required to respond to a collection of information unless it displays a valid OMB control number.

3. Terminal disclaimer with disclaimer fee

☑ Since this utility/plant application was filed on or after June 8, 1995, no terminal disclaimer is required.

☐ A terminal disclaimer (and disclaimer fee (37 CFR 1.20(d)) of $ _____ for a small entity or $ _____ for other than a small entity) disclaiming the required period of time is enclosed herewith (see PTO/SB/63).

4. STATEMENT: The entire delay in filing the required reply from the due date for the required reply until the filing of a grantable petition under 37 CFR 1.137(b) was unintentional. [NOTE: The United States Patent and Trademark Office may require additional information if there is a question as to whether either the abandonment or the delay in filing a petition under 37 CFR 1.137(b) was unintentional (MPEP 711.03(c), subsections (III)(C) and (D)).]

**WARNING:**

Petitioner/applicant is cautioned to avoid submitting personal information in documents filed in a patent application that may contribute to identity theft. Personal information such as social security numbers, bank account numbers, or credit card numbers (other than a check or credit card authorization form PTO-2038 submitted for payment purposes) is never required by the USPTO to support a petition or an application. If this type of personal information is included in documents submitted to the USPTO, petitioners/applicants should consider redacting such personal information from the documents before submitting them to the USPTO. Petitioner/applicant is advised that the record of a patent application is available to the public after publication of the application (unless a non-publication request in compliance with 37 CFR 1.213(a) is made in the application) or issuance of a patent. Furthermore, the record from an abandoned application may also be available to the public if the application is referenced in a published application or an issued patent (see 37 CFR 1.14). Checks and credit card authorization forms PTO-2038 submitted for payment purposes are not retained in the application file and therefore are not publicly available.

| | |
|---|---|
| Signature | 8/20/08<br>Date |
| JOHN L. ROGITZ<br>Typed or printed name | 33,549<br>Registration Number, if applicable |
| 750 B Street, Suite 3120<br>Address | (619) 338-8075<br>Telephone Number |
| San Diego, California 92101<br>Address | |

Enclosures:
- ☑ Fee Payment
- ☐ Reply
- ☐ Terminal Disclaimer Form
- ☑ Additional sheets containing statements establishing unintentional delay
- ☐ Other: _____

CERTIFICATE OF MAILING OR TRANSMISSION [37 CFR 1.8(a)]

I hereby certify that this correspondence is being:

☐ Deposited with the United States Postal Service on the date shown below with sufficient postage as first class mail in an envelope addressed to: Mail Stop Petition, Commissioner for Patents, P. O. Box 1450, Alexandria, VA 22313-1450.

☑ Transmitted by facsimile on the date shown below to the United States Patent and Trademark Office at (571) 273-8300.

| | |
|---|---|
| August 20, 2008<br>Date | Jeanne Gahagan<br>Signature |
| | Jeanne Gahagan<br>Typed or printed name of person signing certificate |

UNITED STATES PATENT AND TRADEMARK OFFICE

UNITED STATES DEPARTMENT OF COMMERCE
United States Patent and Trademark Office
Address: COMMISSIONER FOR PATENTS
P.O. Box 1450
Alexandria, Virginia 22313-1450
www.uspto.gov

| APPLICATION NO. | FILING DATE | FIRST NAMED INVENTOR | ATTORNEY DOCKET NO. | CONFIRMATION NO. |
|---|---|---|---|---|
| 10/954,937 | 09/30/2004 | Binny Sher Gill | ARC920040081US1 | 6380 |

7590 08/15/2008
ROGITZ & ASSOCIATES
750 B STREET
SUITE 3120
SAN DIEGO, CA 92101

| EXAMINER |
|---|
| YU, JAE UN |

| ART UNIT | PAPER NUMBER |
|---|---|
| 2185 | |

| MAIL DATE | DELIVERY MODE |
|---|---|
| 08/15/2008 | PAPER |

# Notice of Abandonment

This application is abandoned in view of:

1. ☐ The applicant's failure to timely file a proper reply to the Office letter mailed on _____.
   (a) ☐ A reply was received on _____ (with a Certificate of Mailing or Transmission date _____ ), which is after the expiration of the period for reply (including a total extension of ____ month(s)) which expired on _____.
   (b) ☐ A proposed reply was received on _____, but it does not constitute a proper reply under 37 CFR 1.113(a) to the final rejection. (A proper reply under 37 CFR 1.113 to a final rejection consists only of:
   (1) a timely filed amendment which places the application in condition for allowance;
   (2) a timely filed Notice of Appeal (with appeal fee);
   (3) a timely filed Request for Continued Examination (RCE) in compliance with 37 CFR 1.114).
   (c) ☐ A reply was received on _____ but it does not constitute a proper reply, or a bona fide attempt at a proper reply, to the non final rejection. See 37 CFR 1.85(a) and 1.111. (See explanation in box e below).
   (d) ☐ No reply has been received.
2. ☒ Applicant's failure to timely pay the required issue fee and publication fee, if applicable, within the statutory period of three months from the mailing date of the Notice of Allowance (PTOL-85).
   (a) ☐ The issue fee and publication fee, if applicable, was received on _____ (with a Certificate of Mailing or Transmission date _____), which is after the expiration of the statutory period for payment of the issue fee (and publication fee) set in the Notice of Allowance (PTOL-85).
   (b) ☐ The submitted fee of $_____ is insufficient. A balance of $_____ is due.
   The issue fee required by 37 CFR 1.18 is $_____.
   The publication fee, if required by 37 CFR 1.18(d), is $_____.
   (c) ☒ The issue fee and publication fee, if applicable, has not been recieved.
3. ☐ Applicant's failure to timely file corrected drawings as required by, and within the three-month period set in, the Notice of Allowability (PTO-37).
   (a) ☐ Proposed corrected drawings were received on _____ (with a Certificate of Mailing or Trasmission dated _____), which is after the expiration of the period for reply.
   (b) ☐ No corrected drawing have been received.
4. ☐ The letter of express abandonment which is signed by the attorney or agent of record, the assignee of the entire interest, or all of the applicants.
5. ☐ The letter of express abandonment which is signed by an attorney or agent (acting in a representative capacity under 37 CFR 1.34(a)) upon the filling of a continuing application.
6. ☐ The decision by the Board of Patent Appeals and Interference rendered on _____ and because the period for seeking court review of the decision has expired and there are no allowed claims.
7. ☐ The reason(s) below:

Petitions to revive under 37 CFR 1.137(a) or (b), or request to withdraw the holding of abandonment under 37 CFR 1.181, should be promptly filed to minimize any negative effects on patent term.

Telephone inquiries should be directed to the Office of Data Management at (571) 272-4200.

Patent Publication Branch
Office of Data Management

OIPE IAPT
AUG 2 1 2008
PATENT & TRADEMARK OFFICE

PTO/SB/64 (08-08)
Approved for use through 08/31/2008. OMB 0651-0031
U.S. Patent and Trademark Office; U.S. DEPARTMENT OF COMMERCE
Under the Paperwork Reduction Act of 1995, no persons are required to respond to a collection of information unless it displays a valid OMB control number.

# PETITION FOR REVIVAL OF AN APPLICATION FOR PATENT ABANDONED UNINTENTIONALLY UNDER 37 CFR 1.137(b)

Docket Number (Optional) ARC920040081US1

First named inventor: Binny Sher Gill

Application No.: 10/954,937 Art Unit: 2185

Filed: September 30, 2004 Examiner: Jae Un Yu

Title: System and Method for Dynamic Sizing of Cache Sequential List

Attention: Office of Petitions
**Mail Stop Petition**
Commissioner for Patents
P.O. Box 1450
Alexandria, VA 22313-1450
FAX (571) 273-8300

NOTE: If information or assistance is needed in completing this form, please contact Petitions Information at (571) 272-3282.

The above-identified application became abandoned for failure to file a timely and proper reply to a notice or action by the United States Patent and Trademark Office. The date of abandonment is the day after the expiration date of the period set for reply in the office notice or action plus an extensions of time actually obtained.

APPLICANT HEREBY PETITIONS FOR REVIVAL OF THIS APPLICATION

NOTE: A grantable petition requires the following items:
(1) Petition fee;
(2) Reply and/or issue fee;
(3) Terminal disclaimer with disclaimer fee - required for all utility and plant applications filed before June 8, 1995; and for all design applications; and
(4) Statement that the entire delay was unintentional.

1. Petition fee
☐ Small entity-fee $ _____ (37 CFR 1.17(m)). Applicant claims small entity status. See 37 CFR 1.27.
☑ Other than small entity – fee $ 1540 (37 CFR 1.17(m))

2. Reply and/or fee
A. The reply and/or fee to the above-noted Office action in the form of _____ (identify type of reply):
☐ has been filed previously on _____.
☐ is enclosed herewith.

B. The issue fee and publication fee (if applicable) of $ 1740.
☐ has been paid previously on _____.
☑ is enclosed herewith.



This collection of information is required by 37 CFR 1.137(b). The information is required to obtain or retain a benefit by the public which is to file (and by the USPTO to process) an application. Confidentiality is governed by 35 U.S.C. 122 and 37 CFR 1.11 and 1.14. This collection is estimated to take 1.0 hour to complete, including gathering, preparing, and submitting the completed application form to the USPTO. Time will vary depending upon the individual case. Any comments on the amount of time you require to complete this form and/or suggestions for reducing this burden, should be sent to the Chief Information Officer, U.S. Patent and Trademark Office, U.S. Department of Commerce, P.O. Box 1450, Alexandria, VA 22313-1450. DO NOT SEND FEES OR COMPLETED FORMS TO THIS ADDRESS. SEND TO: Mail Stop Petition, Commissioner for Patents, P.O. Box 1450, Alexandria, VA 22313-1450.

*If you need assistance in completing the form, call 1-800-PTO-9199 and select option 2.*

08/21/2008 INTEFSW 00017841 10954937
01 FC:1453 1540.00 DA

Under the Paperwork Reduction Act of 1995, no persons are required to respond to a collection of information unless it displays a valid OMB control number.

3. Terminal disclaimer with disclaimer fee

☑ Since this utility/plant application was filed on or after June 8, 1995, no terminal disclaimer is required.

☐ A terminal disclaimer (and disclaimer fee (37 CFR 1.20(d)) of $ _____ for a small entity or $ _____ for other than a small entity) disclaiming the required period of time is enclosed herewith (see PTO/SB/63).

4. STATEMENT: The entire delay in filing the required reply from the due date for the required reply until the filing of a grantable petition under 37 CFR 1.137(b) was unintentional. [NOTE: The United States Patent and Trademark Office may require additional information if there is a question as to whether either the abandonment or the delay in filing a petition under 37 CFR 1.137(b) was unintentional (MPEP 711.03(c), subsections (III)(C) and (D)).]

**WARNING:**

Petitioner/applicant is cautioned to avoid submitting personal information in documents filed in a patent application that may contribute to identity theft. Personal information such as social security numbers, bank account numbers, or credit card numbers (other than a check or credit card authorization form PTO-2038 submitted for payment purposes) is never required by the USPTO to support a petition or an application. If this type of personal information is included in documents submitted to the USPTO, petitioners/applicants should consider redacting such personal information from the documents before submitting them to the USPTO. Petitioner/applicant is advised that the record of a patent application is available to the public after publication of the application (unless a non-publication request in compliance with 37 CFR 1.213(a) is made in the application) or issuance of a patent. Furthermore, the record from an abandoned application may also be available to the public if the application is referenced in a published application or an issued patent (see 37 CFR 1.14). Checks and credit card authorization forms PTO-2038 submitted for payment purposes are not retained in the application file and therefore are not publicly available.

| | |
|---|---|
| Signature | 8/28/08<br>Date |
| JOHN L. ROGITZ<br>Typed or printed name | 33,549<br>Registration Number, if applicable |
| 750 B Street, Suite 3120<br>Address | (619) 338-8075<br>Telephone Number |
| San Diego, California 92101<br>Address | |

Enclosures: ☑ Fee Payment

☐ Reply

☐ Terminal Disclaimer Form

☑ Additional sheets containing statements establishing unintentional delay

☐ Other: _____

CERTIFICATE OF MAILING OR TRANSMISSION [37 CFR 1.8(a)]

I hereby certify that this correspondence is being:

☐ Deposited with the United States Postal Service on the date shown below with sufficient postage as first class mail in an envelope addressed to: Mail Stop Petition, Commissioner for Patents, P. O. Box 1450, Alexandria, VA 22313-1450.

☑ Transmitted by facsimile on the date shown below to the United States Patent and Trademark Office at (571) 273-8300.

| | |
|---|---|
| August 28, 2008<br>Date | Jeanne Gahagan<br>Signature |
| | Jeanne Gahagan<br>Typed or printed name of person signing certificate |

NOTICE OF ALLOWANCE MAILED: April 21, 2008 PI/DAC

Docket No: ARC920040081US1

# PART B - FEE(S) TRANSMITTAL

OIPE IAP7 AUG 21 2008 PATENT & TRADEMARK OFFICE

Complete and send this form, together with applicable fee(s), to: Mail Mail Stop ISSUE FEE Commissioner for Patents P.O. Box 1450 Alexandria, Virginia 22313-1450 or Fax (571)-273-2885

INSTRUCTIONS: This form should be used for transmitting the ISSUE FEE and PUBLICATION FEE (if required). Blocks 1 through 5 should be completed where appropriate. All further correspondence including the Patent, advance orders and notification of maintenance fees will be mailed to the current correspondence address as indicated unless corrected below or directed otherwise in Block 1, by (a) specifying a new correspondence address; and/or (b) indicating a separate "FEE ADDRESS" for maintenance fee notifications.

CURRENT CORRESPONDENCE ADDRESS (Note: Use Block 1 for any change of address)

7590 04/21/2008

International Business Machines Corporation
650 Harry Road, C4TA/J2B
San Jose, CA 95120-6099

Note: A certificate of mailing can only be used for domestic mailings of the Fee(s) Transmittal. This certificate cannot be used for any other accompanying papers. Each additional paper, such as an assignment or formal drawing, must have its own certificate of mailing or transmission.

**Certificate of Mailing or Transmission**

I hereby certify that this Fee(s) Transmittal is being deposited with the United States Postal Service with sufficient postage for first class mail in an envelope addressed to the Mail Stop ISSUE FEE address above, or being facsimile transmitted to the USPTO (571) 273-2885, on the date indicated below.

Jeanne Gabbagan (Depositor's name)
Jeanne Gabbagan (Signature)
August 21, 2008 (Date)

| APPLICATION NO. | FILING DATE | FIRST NAMED INVENTOR | ATTORNEY DOCKET NO. | CONFIRMATION NO. |
|---|---|---|---|---|
| 10/954,937 | 09/30/2004 | Binny Sher Gill | ARC920040081US1 | 6380 |

TITLE OF INVENTION: SYSTEM AND METHOD FOR DYNAMIC SIZING OF CACHE SEQUENTIAL LIST

| APPLN. TYPE | SMALL ENTITY | ISSUE FEE DUE | PUBLICATION FEE DUE | PREV. PAID ISSUE FEE | TOTAL FEE(S) DUE | DATE DUE |
|---|---|---|---|---|---|---|
| nonprovisional | NO | $1440 | $300 | $0 | $1740 | 07/21/2008 |

| EXAMINER | ART UNIT | CLASS-SUBCLASS |
|---|---|---|
| YU, JAE UN | 2185 | 711-173000 |

1. Change of correspondence address or indication of "Fee Address" (37 CFR 1.363).
   - ☑ Change of correspondence address (or Change of Correspondence Address form PTO/SB/122) attached.
   - ☑ "Fee Address" indication (or "Fee Address" Indication form PTO/SB/47; Rev 03-02 or more recent) attached. Use of a Customer Number is required.

2. For printing on the patent front page, list
   (1) the names of up to 3 registered patent attorneys or agents OR, alternatively,
   (2) the name of a single firm (having as a member a registered attorney or agent) and the names of up to 2 registered patent attorneys or agents. If no name is listed, no name will be printed:
   1. John L. Rogitz
   2.
   3.

3. ASSIGNEE NAME AND RESIDENCE DATA TO BE PRINTED ON THE PATENT (print or type)

PLEASE NOTE: Unless an assignee is identified below, no assignee data will appear on the patent. If an assignee is identified below, the document has been filed for recordation as set forth in 37 CFR 3.11. Completion of this form is NOT a substitute for filing an assignment.

(A) NAME OF ASSIGNEE (B) RESIDENCE: (CITY and STATE OR COUNTRY)

International Business Machines Corporation, Armonk, New York

Please check the appropriate assignee category or categories (will not be printed on the patent): ☐ Individual ☑ Corporation or other private group entity ☐ Government

4a. The following fee(s) are submitted:
- ☑ Issue Fee
- ☑ Publication Fee (No small entity discount permitted)
- ☐ Advance Order - # of Copies _____

4b. Payment of Fee(s): (Please first reapply any previously paid issue fee shown above)
- ☐ A check is enclosed.
- ☐ Payment by credit card. Form PTO-2038 is attached.
- ☑ The Director is hereby authorized to charge the required fee(s), any deficiency, or credit any overpayment, to Deposit Account Number 09-0457. (enclose an extra copy of this form).

5. Change in Entity Status (from status indicated above)
- ☐ a. Applicant claims SMALL ENTITY status. See 37 CFR 1.27.
- ☐ b. Applicant is no longer claiming SMALL ENTITY status. See 37 CFR 1.27(g)(2).

NOTE: The Issue Fee and Publication Fee (if required) will not be accepted from anyone other than the applicant; a registered attorney or agent; or the assignee or other party in interest as shown by the records of the United States Patent and Trademark Office.

Authorized Signature _____ Date August 20, 2008

Typed or printed name John L. Rogitz Registration No. 33,549

This collection of information is required by 37 CFR 1.311. The information is required to obtain or retain a benefit by the public which is to file (and by the USPTO to process) an application. Confidentiality is governed by 35 U.S.C. 122 and 37 CFR 1.14. This collection is estimated to take 12 minutes to complete, including gathering, preparing, and submitting the completed application form to the USPTO. Time will vary depending upon the individual case. Any comments on the amount of time you require to complete this form and/or suggestions for reducing this burden, should be sent to the Chief Information Officer, U.S. Patent and Trademark Office, U.S. Department of Commerce, P.O. Box 1450, Alexandria, Virginia 22313-1450. DO NOT SEND FEES OR COMPLETED FORMS TO THIS ADDRESS. SEND TO: Commissioner for Patents, P.O. Box 1450, Alexandria, Virginia 22313-1450.

Under the Paperwork Reduction Act of 1995, no persons are required to respond to a collection of information unless it displays a valid OMB control number.

08/21/2008 INTEFSW 00017841 10954937
02 FC:1504 300.00 DA

08/22/2008 SSANDAR1 00000005 090441 10954937
01 FC:1501 1440.00 DA

## *2008-2009 CALENDAR*

| DATE DUE | FINAL EXT. | DOCKET NO. | SERIAL NO. | TITLE | ACTION |
|---|---|---|---|---|---|
| 07 17 08 | 09 17 08 | 1168-274D | [REDACTED] | [REDACTED] | Reminder – NOA due. |
| 07 17 08 | 09 17 08 | 1168.119 | [REDACTED] | [REDACTED] | Final OA response due w/1 month extension |
| 07 17 08 | 09 17 08 | 1189.036 | [REDACTED] | [REDACTED] | Non-final OA response due w/1 month extension |
| 07 18 08 | 09 18 08 | 1168.122 | [REDACTED] | [REDACTED] | Non-final OA response due w/1 month extension |
| 07 19 08 | 08 19 08 | 1201.070 | [REDACTED] | [REDACTED] | Reminder – Non-Final OA response due |
| 07 19 08 | 09 19 08 | 1176.005 | [REDACTED] | [REDACTED] | Final OA response due w/1 month extension |
| 07 21 08 | 08 21 08 | 1189.030 | [REDACTED] | [REDACTED] | Response to Final OA due w/2 month extension. |
| 07 23 08 | **W/ EXT 10 23 08** | 1189.049 | [REDACTED] | [REDACTED] | Non-Final OA response due. |
| 07 25 08 | **W/ EXT 10 25 08** | 1168.141 | [REDACTED] | [REDACTED] | Final OA response due. |
| 07 25 08 | 09 25 08 | 1065-02.C4 | [REDACTED] | [REDACTED] | Reminder – NOA due. |
| 07 27 08 | 09 27 08 | 1168.075 | [REDACTED] | [REDACTED] | Final OA response due w/1 month extension |
| 07 29 08 | **W/ EXT 10 29 08** | 1189.025 | [REDACTED] | [REDACTED] | Non-Final OA response due. |
| 07 30 08 | **W/ EXT 10 30 08** | 1168.124 | [REDACTED] | [REDACTED] | Final OA response due. |
| 08 01 08 | 10 01 08 | 1201.015 | [REDACTED] | [REDACTED] | Non-Final OA response due w/ 1 month ext. |
| 08 01 08 | 10 01 08 | 1168.111 | [REDACTED] | [REDACTED] | Non-final OA response due w/1 month extension |



P3

UNITED STATES PATENT AND TRADEMARK OFFICE

Commissioner for Patents
United States Patent and Trademark Office
P.O. Box 1450
Alexandria, VA 22313-1450
www.uspto.gov

MERCHANT & GOULD
(MICROSOFT)
P.O. BOX 2903
MINNEAPOLIS MN 55402-0903

COPY MAILED

SEP 28 2009

OFFICE OF PETITIONS

In re Application of :
Williams, et al. :
Application No. 10/954,954 : UPDATE/CLARIFICATION OF DECISION
Filing/ §371(c ) Date: 30 September, 2004 :
Attorney Docket No. :
60001.0418US01/309465.01

This is a\on the petition filed on 2 June, 2009, to expunge from the application certain materials under the provisions of 37 C.F.R. §1.182, properly considered pursuant to the regulations at 37 C.F.R. §1.59.

The petition under 37 C.F.R. §1.182 and 37 C.F.R. §1.59 is **DISMISSED**.

***Petitioner is reminded of the duty of Petitioner to retain the information as required for the period of any patent with regard to which such information is submitted—Petitioenr has not made this commitment and is directed to the guidance at, inter alia, MPEP §724.05.***

The conditions for a petition pursuant to 37 C.F.R. §1.59 are set forth in the regulation, to wit:

> **§ 1.59 Expungement of information or copy of papers in application file.**
> (a)...
>
> (1) Information in an application will not be expunged, except as provided in paragraph (b) of this section or §41.7(a) of this title.
> (2)Information forming part of the original disclosure (*i.e.*, written specification including the claims, drawings, and any preliminary amendment specifically incorporated into an executed oath or declaration under §§1.63 and 1.175) will not be expunged from the application file.
>
> (b)An applicant may request that the Office expunge information, other than what is excluded by paragraph (a)(2) of this section, by filing a petition under this paragraph. Any petition to expunge information from an application must include the fee set forth in §1.17(g) and establish to the satisfaction of the Director that the expungement of the

information is appropriate in which case a notice granting the petition for expungement will be provided.

(c)Upon request by an applicant and payment of the fee specified in §1.19(b), the Office will furnish copies of an application, unless the application has been disposed of (*see* §§1.53(e), (f) and (g)). The Office cannot provide or certify copies of an application that has been disposed of.

Guidance in this matter is set forth at MPEP §724.05, which provides in pertinent part:

**724.05 Petition To Expunge Information or Copy of Papers in Application File [R-6]**

***

**II. INFORMATION UNINTENTIONALLY SUBMITTED IN APPLICATION**

A petition to expunge information unintentionally submitted in an application (other than information forming part of the original disclosure) may be filed under 37 C.F.R. §1.59(b), provided that:

(A) the Office can effect such return prior to the issuance of any patent on the application in issue;

(B) it is stated that the information submitted was unintentionally submitted and the failure to obtain its return would cause irreparable harm to the party who submitted the information or to the party in interest on whose behalf the information was submitted;

(C) the information has not otherwise been made public;

(D) there is a commitment on the part of the petitioner to retain such information for the period of any patent with regard to which such information is submitted;

(E) it is established to the satisfaction of the Director that the information to be returned is not material information under 37 C.F.R. §1.56; and

(F) the petition fee as set forth in 37 C.F.R. §1.17(g) is included.

A request to expunge information that has not been clearly identified as information that may be later subject to such a request by marking and placement in a separate sealed envelope or container shall be treated on a case-by-case basis. Applicants should note that unidentified information that is a trade secret, proprietary, or subject to a protective order that is submitted in an Information Disclosure Statement may inadvertently be placed in an Office prior art search file by the examiner due to the lack of such identification and may not be retrievable.

***

Thus, the petition herein must include:

> (1) it is stated that the information submitted was unintentionally submitted and the failure to obtain its return would cause irreparable harm to the party who submitted the information or to the party in interest on whose behalf the information was submitted;
>
> (2) the information has not otherwise been made public;
>
> (3) there is a commitment on the part of the petitioner to retain such information for the period of any patent with regard to which such information is submitted;
>
> (4) it is established to the satisfaction of the Director that the information to be returned is not material information under 37 C.F.R. §1.56; and
>
> (5) the petition fee as set forth in 37 C.F.R. §1.17(g) is included.

## BACKGROUND

The record reflects that: Petitioner avers that that the specification as filed on 17 December, 2007, in the instant application contained in its entirety materials intended for another application and are not related to the instant application, with no bearing or relevance to the patentability or scope of subject matter of the instant application.

Petitioner has not stated, however, that the information inadvertently submitted has not otherwise been publicly disclosed or made the other representations required under the rule and the guidance in the Commentary, *inter alia*, at MPEP §724.05.

- It has come to the notice of the Office that in submitting the petition herein, Petitioner improvidently included therewith on 27 March, 2009, an unredacted copy of signature page discussed above.

Thus, Petitioner seeks to replace (the typed numbered (at the top)) page "4" (also and hand-number (at the bottom) page "5" of 20) filed on 27 March, 2009, and that included in error personal financial information of the inventors with redacted version filed contemporaneously with the petition on 9 April, 2009.

(It is noted that the Office will not return documents from a/the physical file because it is Office policy not to remove paper from files that have been scanned. Even if a petition "to expunge" is granted as to one or more documents with regard to an application or patent, the image of the recorded document will remain in the records of the Office. However, the Office will close the

images in the application or patent that was the subject of the petition so that no information about the recorded document will appear when someone searches for the application or patent number in the electronic file.)

Out of an abundance of caution, Petitioners always are reminded that those registered to practice *and* all others who make representations before the Office must inquire into the underlying facts of representations made to the Office and support averments with the appropriate documentation–since all owe to the Office the continuing duty to disclose.[1]

The availability of applications and application papers online to applicants/practitioners who diligently associate their Customer Number with the respective application(s) now provides an applicant/practitioner on-demand information as to events/transactions in an application.

## CONCLUSION

For the reasons set forth above, and because Petitioner has not complied with the requirements of the regulations at 37 C.F.R. §1.59 and the guidance in the Commentary at MPEP §724.05, the petition is **dismissed**.

The application file is being released to Technology Center/AU 2174 for further processing in due course.

Telephone inquiries regarding this decision may be directed to the undersigned at (571) 272-3214—it is noted, however, that all practice before the Office is in writing (see: 37 C.F.R. §1.2[2]) and the proper authority for action on any matter in this regard are the statutes (35 U.S.C.), regulations (37 C.F.R.) and the commentary on policy (MPEP). Therefore, no telephone discussion may be controlling or considered authority for Petitioner's action(s).

/John J. Gillon, Jr./
John J. Gillon, Jr.
Senior Attorney
Office of Petitions

---

[1] See supplement of 17 June, 1999. The Patent and Trademark Office is relying on petitioner's duty of candor and good faith and accepting a statement made by Petitioner. See Changes to Patent Practice and Procedure, 62 Fed. Reg. at 53160 and 53178, 1203 Off. Gaz. Pat. Office at 88 and 103 (responses to comments 64 and 109)(applicant obligated under 37 C.F.R. §10.18 to inquire into the underlying facts and circumstances when providing statements to the Patent and Trademark Office). See specifically, the regulations at 37 C.F.R. §10.18.

[2] The regulations at 37 C.F.R. §1.2 provide:

**§1.2 Business to be transacted in writing.**
All business with the Patent and Trademark Office should be transacted in writing. The personal attendance of applicants or their attorneys or agents at the Patent and Trademark Office is unnecessary. The action of the Patent and Trademark Office will be based exclusively on the written record in the Office. No attention will be paid to any alleged oral promise, stipulation, or understanding in relation to which there is disagreement or doubt.

UNITED STATES PATENT AND TRADEMARK OFFICE

Commissioner for Patents
United States Patent and Trademark Office
P.O. Box 1450
Alexandria, VA 22313-1450
www.uspto.gov

**INTEL CORPORATION**
**c/o CPA Global**
**P.O. BOX 52050**
**MINNEAPOLIS, MN 55402**

**COPY MAILED**

DEC 1 6 2009

**OFFICE OF PETITIONS**

| | | |
|---|---|---|
| In re Application of | : | |
| **Daewoong SUH, et al.** | : | |
| Application No. 10/954,959 | : | DECISION ON PETITION |
| Filed: September 29, 2004 | : | UNDER 37 CFR 1.137(b) |
| Attorney Docket No. **P19636** | : | |

This is a decision on the petition under the unintentional provisions of 37 CFR 1.137(b), filed April 7, 2009, to revive the above-identified application.

The petition is **DISMISSED**.

A grantable petition under 37 CFR 1.137(b) must be accompanied by: (1) the required reply, unless previously filed; (2) the petition fee as set forth in 37 CFR 1.17(m); (3) a statement that the entire delay in filing the required reply from the due date for the reply until the filing of a grantable petition pursuant to 37 CFR 1.137(b) was unintentional; and (4) any terminal disclaimer (and fee as set forth in 37 CFR 1.20(d)) required by 37 CFR 1.137(d). Where there is a question as to whether either the abandonment or the delay in filing a petition under 37 CFR 1.137 was unintentional, the Director may require additional information. See MPEP 711.03(c)(II)(C) and (D).

The application became abandoned for failure to timely file a reply within the meaning of 37 CFR 1.113 to the final Office action of July 23, 2008. The proposed reply required for consideration of a petition to revive must be a Notice of Appeal (and appeal fee required by 37 CFR 41.20(b)(2)), an amendment that *prima facie* places the application in condition for allowance, a Request for Continued Examination (RCE) and submission (37 CFR 1.114), or the filing of a continuing application under 37 CFR 1.53(b). *See* MPEP 711.03(c)(II)(A)(2). Since the amendment submitted does not *prima facie* place the application in condition for allowance, the reply required must be a Notice of Appeal (and appeal fee), RCE, or the filing of a continuing application under 37 CFR 1.53(b). The instant petition lacks item (1) a proper reply.

It is noted that an amendment was included with the petition filed April 7, 2009. However, the amendment is considered non-responsive, since it did not place the application in condition for allowance. See the attached Advisory Action. The proposed reply required for consideration of a petition to revive this application must

be a Notice of Appeal (and appeal fee required under 37 CFR 1.17 (b)), and amendment that *prima facie* places the application in condition for allowance, or the filing of a submission under 37 CFR 114 (RCE) or a continuing application under 37 CFR 1.53 (b). See MPEP 711.03 (c)(II)(A)(2).

Any request for reconsideration of this decision must be submitted within TWO (2) MONTHS from the mail date of this decision. Extensions of time under 37 CFR 1.136(a) are permitted. The reconsideration request should include a cover letter entitled "Renewed Petition under 37 CFR 1.137(b)." This is **not** a final agency action within the meaning of 5 U.S.C. § 704.

Further correspondence with respect to this matter should be addressed as follows:

By Mail: Mail Stop PETITION
Commissioner for Patents
P. O. Box 1450
Alexandria, VA 22313-1450

By hand: U. S. Patent and Trademark Office
Customer Service Window, Mail Stop Petitions
Randolph Building
401 Dulany Street
Alexandria, VA 22314

The centralized facsimile number is **(571) 273-8300.**

Telephone inquiries concerning this decision should be directed to Monica A. Graves at (571) 272-7253.

Brian W. Brown
Petitions Examiner
Office of Petitions

Attachment: Advisory Action

| Advisory Action Before the Filing of an Appeal Brief | Application No. 10/954,959 | Applicant(s) SUH ET AL. | |
|---|---|---|---|
| | Examiner Sikyin Ip | Art Unit 1793 | |

***--The MAILING DATE of this communication appears on the cover sheet with the correspondence address --***

THE REPLY FILED 07 April 2009 FAILS TO PLACE THIS APPLICATION IN CONDITION FOR ALLOWANCE.

1. ☒ The reply was filed after a final rejection, but prior to or on the same day as filing a Notice of Appeal. To avoid abandonment of this application, applicant must timely file one of the following replies: (1) an amendment, affidavit, or other evidence, which places the application in condition for allowance; (2) a Notice of Appeal (with appeal fee) in compliance with 37 CFR 41.31; or (3) a Request for Continued Examination (RCE) in compliance with 37 CFR 1.114. The reply must be filed within one of the following time periods:
   a) ☒ The period for reply expires 3 months from the mailing date of the final rejection.
   b) ☐ The period for reply expires on: (1) the mailing date of this Advisory Action, or (2) the date set forth in the final rejection, whichever is later. In no event, however, will the statutory period for reply expire later than SIX MONTHS from the mailing date of the final rejection.
   Examiner Note: If box 1 is checked, check either box (a) or (b). ONLY CHECK BOX (b) WHEN THE FIRST REPLY WAS FILED WITHIN TWO MONTHS OF THE FINAL REJECTION. See MPEP 706.07(f).

Extensions of time may be obtained under 37 CFR 1.136(a). The date on which the petition under 37 CFR 1.136(a) and the appropriate extension fee have been filed is the date for purposes of determining the period of extension and the corresponding amount of the fee. The appropriate extension fee under 37 CFR 1.17(a) is calculated from: (1) the expiration date of the shortened statutory period for reply originally set in the final Office action; or (2) as set forth in (b) above, if checked. Any reply received by the Office later than three months after the mailing date of the final rejection, even if timely filed, may reduce any earned patent term adjustment. See 37 CFR 1.704(b).

NOTICE OF APPEAL

2. ☐ The Notice of Appeal was filed on _____. A brief in compliance with 37 CFR 41.37 must be filed within two months of the date of filing the Notice of Appeal (37 CFR 41.37(a)), or any extension thereof (37 CFR 41.37(e)), to avoid dismissal of the appeal. Since a Notice of Appeal has been filed, any reply must be filed within the time period set forth in 37 CFR 41.37(a).

AMENDMENTS

3. ☒ The proposed amendment(s) filed after a final rejection, but prior to the date of filing a brief, will not be entered because
   (a) ☒ They raise new issues that would require further consideration and/or search (see NOTE below);
   (b) ☐ They raise the issue of new matter (see NOTE below);
   (c) ☐ They are not deemed to place the application in better form for appeal by materially reducing or simplifying the issues for appeal; and/or
   (d) ☐ They present additional claims without canceling a corresponding number of finally rejected claims.
   NOTE: *See Continuation Sheet*. (See 37 CFR 1.116 and 41.33(a)).
4. ☐ The amendments are not in compliance with 37 CFR 1.121. See attached Notice of Non-Compliant Amendment (PTOL-324).
5. ☐ Applicant's reply has overcome the following rejection(s): _____.
6. ☐ Newly proposed or amended claim(s) _____ would be allowable if submitted in a separate, timely filed amendment canceling the non-allowable claim(s).
7. ☒ For purposes of appeal, the proposed amendment(s): a) ☒ will not be entered, or b) ☐ will be entered and an explanation of how the new or amended claims would be rejected is provided below or appended.
   The status of the claim(s) is (or will be) as follows:
   Claim(s) allowed: _____.
   Claim(s) objected to: _____.
   Claim(s) rejected: *3,4,6,7 and 10*.
   Claim(s) withdrawn from consideration: *12-15,17,18 and 22-33*.

AFFIDAVIT OR OTHER EVIDENCE

8. ☐ The affidavit or other evidence filed after a final action, but before or on the date of filing a Notice of Appeal will not be entered because applicant failed to provide a showing of good and sufficient reasons why the affidavit or other evidence is necessary and was not earlier presented. See 37 CFR 1.116(e).
9. ☐ The affidavit or other evidence filed after the date of filing a Notice of Appeal, but prior to the date of filing a brief, will not be entered because the affidavit or other evidence failed to overcome all rejections under appeal and/or appellant fails to provide a showing a good and sufficient reasons why it is necessary and was not earlier presented. See 37 CFR 41.33(d)(1).
10. ☐ The affidavit or other evidence is entered. An explanation of the status of the claims after entry is below or attached.

REQUEST FOR RECONSIDERATION/OTHER

11. ☒ The request for reconsideration has been considered but does NOT place the application in condition for allowance because:
    See Continuation Sheet.
12. ☐ Note the attached Information *Disclosure Statement*(s). (PTO/SB/08) Paper No(s). _____
13. ☐ Other: _____.

/Sikyin Ip/
Primary Examiner, Art Unit 1793

Continuation of 3. NOTE: The proposed new claims 51-52 raise new issues, which may require restriction.

Continuation of 11. does NOT place the application in condition for allowance because: of reasons set forth in prior office action. Applicants' argument in Table of instant remarks with respect to JP '666 is noted. But, it is found inconsistent with said prior art. JP '666 discloses tin content 20 - 55 wt.% (abstract and [0024]). Applicants' argument with respect to JP '493 is noted. But, examples of cited prior art are for illustration not for limitation .

UNITED STATES PATENT AND TRADEMARK OFFICE

Commissioner for Patents
United States Patent and Trademark Office
P.O. Box 1450
Alexandria, VA 22313-1450
www.uspto.gov

**RYAN MASON & LEWIS, LLP**
**90 FOREST AVENUE**
**LOCUST VALLEY, NY 11560**

MAILED

JUN 03 2010

OFFICE OF PETITIONS

| | | |
|---|---|---|
| In re Application of | : | |
| **Louis A. GASPARINI**, et *al.* | : | |
| Application No. 11/166,579 | : | DECISION ON PETITION |
| Filed: June 24, 2005 | : | UNDER 37 CFR 1.137(b) |
| Attorney Docket No. **4414-1483** | : | |

This is a decision on the petition under the unintentional provisions of 37 CFR 1.137(b), filed April 5, 2010, to revive the above-identified application.

The petition is **GRANTED**.

This application became abandoned for failure to timely pay the issue and publication fees on or before March 16, 2010, as required by the Notice of Allowance and Fee(s) Due, mailed December 16, 2009. Accordingly, the date of abandonment of this application is March 17, 2010.

The petition satisfies the requirements of 37 CFR 1.137(b) in that petitioner has supplied (1) the reply in the form of payment of the issue fee of $1510 and the publication fee of $300, (2) the petition fee of $1620; and (3) a proper statement of unintentional delay.

Telephone inquiries concerning this decision should be directed to Monica A. Graves at (571) 272-7253.

This application is being referred to the Office of Data Management for processing into a patent.

Thurman K. Page

Thurman K. Page
Petitions Examiner
Office of Petitions

UNITED STATES PATENT AND TRADEMARK OFFICE

Commissioner for Patents
United States Patent and Trademark Office
P.O. Box 1450
Alexandria, VA 22313-1450
www.uspto.gov

**MAILED**

JUN 07 2010

**OFFICE OF PETITIONS**

**INTEL CORPORATION**
**c/o CPA GLOBAL**
**P.O. BOX 52050**
**MINNEAPOLIS, MN 55402**

In re Application of
**Daewoong SUH**, et *al.*
Application No. 10/954,959
Filed: September 29, 2004
Attorney Docket No. **P19636**

DECISION ON PETITION
UNDER 37 CFR 1.137(b)

This is a decision on the renewed petition under the unintentional provisions of 37 CFR 1.137(b), filed February 19, 2010, to revive the above-identified application.

The petition is **GRANTED**.

The application became abandoned for failure to timely file a reply within the meaning of 37 CFR 1.113 to the final Office action of July 23, 2008. The proposed reply required for consideration of a petition to revive must be a Notice of Appeal (and appeal fee required by 37 CFR 41.20(b)(2), an amendment that *prima facie* places the application in condition for allowance, a Request for Continued Examination and submission (37 CFR 1.114), or the filing of a continuing application under 37 CFR 1.53(b). See MPEP 711.03(c)(III)(A)(2). No extensions of time pursuant to the provisions of 37 CFR 1.136(a) were obtained. Accordingly, the date of abandonment of this application is October 24, 2008.

The petition satisfies the requirements of 37 CFR 1.137(b) in that petitioner has supplied (1) the reply in the form of a Request for Continued Examination (RCE) and fee of $810, and the submission required by 37 CFR 1.114; (2) the petition fee of $1620; and (3) a proper statement of unintentional delay.

Telephone inquiries concerning this decision should be directed to Monica A. Graves at (571) 272-7253.

This application is being referred to Technology Center AU 1793 for processing of the RCE and for appropriate action by the Examiner in the normal course of business on the amendment submitted in accordance with 37 CFR 1.114.

Thurman K. Page
Petitions Examiner
Office of Petitions

UNITED STATES PATENT AND TRADEMARK OFFICE

Commissioner for Patents
United States Patent and Trademark Office
P.O. Box 1450
Alexandria, VA 22313-1450
www.uspto.gov

DIGIMARC CORPORATION
9405 SW GEMINI DRIVE
BEAVERTON OR 97008

**MAILED**

APR 02 2010

**OFFICE OF PETITIONS**

| | |
|---|---|
| In re Application of | : |
| Robert L. Jones | : DECISION ON REQUEST FOR |
| Application No. 10/954,966 | : RECONSIDERATION OF PATENT |
| Filed: September 29, 2004 | : TERM ADJUSTMENT |
| Atty. Dkt. No.: P1029D | : |
| | : |

This is in response to the REQUEST FOR RECONSIDERATION OF PATENT TERM ADJUSTMENT UNDER 37 C.F.R. 1.705(b) filed on December 17, 2009. Applicants request that the determination of patent term adjustment be corrected from 681 days to 922 days. Applicants request this correction, in part, on the basis that the Office will take in excess of three years to issue this patent.

To the extent the instant application for patent term adjustment requests reconsideration of the patent term adjustment as it relates to the Office's failure to issue the patent within 3 years of the filing date, the application for patent term adjustment under 37 CFR 1.705(b) is **DISMISSED as PREMATURE**.

Knowledge of the actual date the patent issues is required to calculate the amount, if any, of additional patent term patentee is entitled to for Office failure to issue the patent within 3 years. See § 1.702(b). (This is true even where a request for continued examination (RCE) was filed). The computer will not undertake the § 1.702(b) calculation until the actual date of issuance of the patent has been determined. Likewise, the computer will not calculate any further Office delay under § 1.702(a)(4) or applicant delay under § 1.704(c)(10) until the actual date of issuance of the patent has been determined. As

such, the Office can not make a determination on the correctness of the patent term adjustment until the patent has issued.

Requesting reconsideration of the patent term adjustment to be indicated on the patent under 37 CFR 1.705(b) based on the initial determination of patent term adjustment and a projected issuance date of the patent (or even the filing date of the request for continued examination) is premature. Accordingly, it is appropriate to dismiss as premature such a request.

Rather than file an application for patent term adjustment under 37 CFR 1.705(b) contesting the 37 CFR 1.702(b) calculation at the time of the mailing of the notice of allowance, applicants are advised that they may wait until the time of the issuance of the patent and file a request for reconsideration of the patent term adjustment pursuant to 37 CFR 1.705(d). As the USPTO does not calculate the amount of time earned pursuant to 37 CFR 1.702(b) until the time of the issuance of the patent, the Office will consider any request for reconsideration of the patent term adjustment due to an error in the calculation of 37 CFR 1.702(b) to be timely if the request for reconsideration is filed within two months of the issuance of the patent. However, as to all other bases for contesting the initial determination of patent term adjustment received with the notice of allowance, applicant must timely file an application for patent term adjustment prior to the payment of the issue fee[1].

The Office acknowledges submission of the $200.00 fee set forth in 37 CFR 1.18(e). No additional fees are required.

To the extent that the instant application for patent term adjustment requests reconsideration of the PTA at the time of the mailing of the Notice of Allowance, the request is **GRANTED TO THE EXTENT INDICATED**.

---

[1] For example, if applicant disputes both the calculation of patent term adjustment under 37 CFR 1.702(a)(1) for Office failure to mail a first Office action or notice of allowance not later than fourteen months after the date on which the application was filed and under 37 CFR 1.702(b) for Office failure to issue a patent within three years of the actual filing date of the application, then applicant must still timely file an application for patent term adjustment prior to the payment of the issue fee to contest the calculation of Office delay in issuing a first Office action or notice of allowance. See 37 CFR 1.705(b) and 35 U.S.C. 154(b)(3)(B). A dispute as to the calculation of the §1.702(a)(1) period raised on request for reconsideration of patent term adjustment under 37 CFR 1.705(d) will be dismissed as untimely filed.

The Office has updated the PALM and PAIR screens to reflect that the correct Patent Term Adjustment (PTA) determination at the time of the mailing of the Notice of Allowance is four hundred sixty-two (462) days. A copy of the updated PALM screen, showing the correct determination, is enclosed.

On September 30, 2009, the Office mailed a Determination of Patent Term Adjustment under 35 U.S.C. 154(b) in the above-identified application. Applicant was advised that the patent term adjustment to date was 681 days (711 days of PTO delay and 30 days of applicant delay). On December 17, 2009, the instant request was filed.[2]

Applicants assert that an additional period of reduction of 245 days for applicant delay should be assessed pursuant to 37 CFR 1.704(c)(7) because the Appeal Briefs filed on July 30, 2008 and on September 17, 2008 contained omissions.

The filing of a defective appeal brief is not an omission within the meaning of 37 CFR 1.704(c)(7). This is because an appeal brief is not a reply and § 1.704(c)(7) only considers filing a reply with an omission as a failure to engage. Therefore, no reduction is warranted for the filing of a defective appeal brief.

Nevertheless, it is noted that 37 CFR 1.702(a)(2) requires the Office to respond to a reply under 35 U.S.C. 132, or to an appeal taken under 35 U.S.C. 134, not later than four months after the date on which the reply was filed or the appeal was taken.

In this regard, 37 CFR 1.703(a)(4) states that the period of adjustment under § 1.702(a) is the number of days, if any, in the period beginning on the day after the date that is four months after the date an appeal brief in compliance with § 41.37 of this title was filed and ending on the date of mailing of any of an examiner's answer under § 41.39 of this title, an action under 35 U.S.C. 132, or a notice of allowance under 35 U.S.C. 151, whichever occurs first.

An appeal brief in compliance with 37 CFR 41.39 was filed on April 1, 2009, not July 30, 2008. As an Office action was mailed on July 7, 2009, which is within four (4) months of the filing of the Appeal Brief filed on April 1, 2009, the 219 day period of adjustment for Office delay in responding to the

[2] PALM records indicate that the issue fee was paid on December 23, 2009.

appeal brief filed on July 30, 2008, is not warranted and will be removed.

In view thereof, the patent term adjustment at the time of the mailing of the notice of allowance is 462 days (492 (711 - 219) days of Office delay less 30 days of applicant delay).

The Office thanks Applicants for their good faith and candor in bringing this matter to the attention of the Office.

The application is being forwarded to the Office of Data Management for issuance of the patent. The patent term adjustment indicated on the patent (as shown on the Issue Notification mailed about three weeks prior to patent issuance) will include any additional adjustment accrued both for Office delay in issuing the patent more than four months after payment of the issue fee and satisfaction of all outstanding requirements, and for the Office taking in excess of three years to issue the patent (to the extent that the three-year period does not overlap with periods already accorded).

Telephone inquiries specific to this decision should be directed to Senior Petitions Attorney Douglas I. Wood at (571) 272-3231.

Anthony Knight
Supervisor
Office of Petitions

Encl: Revised PALM Calculation

Day : Thursday

# PALM INTRANET

Date: 4/1/2010
Time: 10:03:18

| PTA Calculations for Application: 10/954966 | | | |
|---|---|---|---|
| Application Filing Date: | 09/29/2004 | PTO Delay (PTO): | 711 |
| Issue Date of Patent: | | Three Years: | 0 |
| Pre-Issue Petitions: | 0 | Applicant Delay (APPL): | 30 |
| Post-Issue Petitions: | 0 | Total PTA (days): | 462 |
| PTO Delay Adjustment: | -219 | | |

**File Contents History**

| Number | Date | Contents Description | PTO | APPL | START |
|---|---|---|---|---|---|
| 72 | 03/31/2010 | ADJUSTMENT OF PTA CALCULATION BY PTO | | 219 | |
| 63 | 09/30/2009 | MAIL NOTICE OF ALLOWANCE | | | |
| 62 | 09/29/2009 | ISSUE REVISION COMPLETED | | | |
| 61 | 09/29/2009 | NOTICE OF ALLOWANCE DATA VERIFICATION COMPLETED | | | |
| 60 | 09/29/2009 | DOCUMENT VERIFICATION | | | |
| 59 | 09/28/2009 | NOTICE OF ALLOWABILITY | | | |
| 53 | 09/04/2009 | INFORMATION DISCLOSURE STATEMENT CONSIDERED | | | |
| 52 | 09/21/2009 | DATE FORWARDED TO EXAMINER | | | |
| 51 | 09/04/2009 | AMENDMENT SUBMITTED/ENTERED WITH FILING OF CPA/RCE | | | |
| 50 | 09/21/2009 | DATE FORWARDED TO EXAMINER | | | |
| 49 | 09/04/2009 | REQUEST FOR CONTINUED EXAMINATION (RCE) | | | |
| 48 | 09/21/2009 | DISPOSAL FOR A RCE / CPA / R129 | | | |
| 47 | 09/04/2009 | INFORMATION DISCLOSURE STATEMENT (IDS) FILED | | | |
| 46 | 09/04/2009 | WORKFLOW - REQUEST FOR RCE - BEGIN | | | |
| 45 | 07/07/2009 | MAIL EX PARTE QUAYLE ACTION (PTOL - 326) | 219 | | 31 |
| 44 | 07/06/2009 | EX PARTE QUAYLE ACTION | | | |
| 43 | 05/04/2009 | APPEAL BRIEF REVIEW COMPLETE | | | |
| 42 | 05/04/2009 | DATE FORWARDED TO EXAMINER | | | |
| 41 | 04/01/2009 | APPEAL BRIEF FILED | | | |
| 40 | 04/01/2009 | REQUEST FOR EXTENSION OF TIME - GRANTED | | | |
| 39 | 10/02/2008 | NOTICE -- DEFECTIVE APPEAL BRIEF | | | |
| 38 | 09/30/2008 | APPEAL BRIEF REVIEW COMPLETE | | | |

| | | | | | |
|---|---|---|---|---|---|
| 37 | 09/30/2008 | DATE FORWARDED TO EXAMINER | | | |
| 36.1 | 09/17/2008 | DEFECTIVE / INCOMPLETE APPEAL BRIEF FILED | | | |
| 36 | 09/17/2008 | APPEAL BRIEF FILED | | | |
| 35 | 09/17/2008 | REQUEST FOR EXTENSION OF TIME - GRANTED | | | |
| 34 | 08/12/2008 | NOTICE -- DEFECTIVE APPEAL BRIEF | | | |
| 33 | 08/08/2008 | APPEAL BRIEF REVIEW COMPLETE | | | |
| 32 | 08/08/2008 | DATE FORWARDED TO EXAMINER | | | |
| 31.1 | 07/30/2008 | DEFECTIVE / INCOMPLETE APPEAL BRIEF FILED | | | |
| 31 | 07/30/2008 | APPEAL BRIEF FILED | | | |
| 30 | 07/30/2008 | REQUEST FOR EXTENSION OF TIME - GRANTED | | | |
| 29 | 04/30/2008 | NOTICE OF APPEAL FILED | | 30 | 27 |
| 28 | 04/30/2008 | REQUEST FOR EXTENSION OF TIME - GRANTED | | | |
| 27 | 12/31/2007 | MAIL FINAL REJECTION (PTOL - 326) | | | |
| 26 | 12/26/2007 | FINAL REJECTION | | | |
| 23 | 10/12/2007 | DATE FORWARDED TO EXAMINER | | | |
| 22 | 10/03/2007 | RESPONSE AFTER NON-FINAL ACTION | | | |
| 21 | 07/11/2007 | MAIL NON-FINAL REJECTION | | | |
| 20 | 07/09/2007 | NON-FINAL REJECTION | | | |
| 19 | 05/04/2007 | DATE FORWARDED TO EXAMINER | | | |
| 18 | 05/02/2007 | RESPONSE TO ELECTION / RESTRICTION FILED | | | |
| 17 | 04/05/2007 | MAIL RESTRICTION REQUIREMENT | 492 | | -1 |
| 16 | 03/31/2007 | REQUIREMENT FOR RESTRICTION / ELECTION | | | |
| 15 | 01/17/2006 | IFW TSS PROCESSING BY TECH CENTER COMPLETE | | | |
| 14 | 01/17/2006 | CASE DOCKETED TO EXAMINER IN GAU | | | |
| 13 | 02/15/2005 | APPLICATION RETURN FROM OIPE | | | |
| 12 | 02/15/2005 | APPLICATION RETURN TO OIPE | | | |
| 11 | 02/15/2005 | APPLICATION DISPATCHED FROM OIPE | | | |
| 10 | 02/15/2005 | APPLICATION IS NOW COMPLETE | | | |
| 9 | 01/24/2005 | PAYMENT OF ADDITIONAL FILING FEE/PREEXAM | | | |
| 8 | 01/24/2005 | A STATEMENT BY ONE OR MORE INVENTORS SATISFYING THE REQUIREMENT UNDER 35 USC 115, OATH OF THE APPLIC | | | |
| | | APPLICANT HAS SUBMITTED NEW DRAWINGS | | | |

| | | | | | |
|---|---|---|---|---|---|
| 7 | 01/24/2005 | TO CORRECT CORRECTED PAPERS PROBLEMS | | | |
| 6 | 11/15/2004 | NOTICE MAILED--APPLICATION INCOMPLETE--FILING DATE ASSIGNED | | | |
| 4 | 11/05/2004 | CLEARED BY OIPE CSR | | | |
| 3 | 11/05/2004 | CASE CLASSIFIED BY OIPE | | | |
| 2 | 10/19/2004 | IFW SCAN & PACR AUTO SECURITY REVIEW | | | |
| 1 | 09/29/2004 | INITIAL EXAM TEAM NN | | | |

**Search Another: Application#** Search

**EXPLANATION OF PTA CALCULATION**

**EXPLANATION OF PTE CALCULATION**

To go back, right click here and select Back. To go forward, right click here and select Forward. To refresh, right click here and select Refresh.

Back to OASIS | Home page

UNITED STATES PATENT AND TRADEMARK OFFICE

Commissioner for Patents
United States Patent and Trademark Office
P.O. Box 1450
Alexandria, VA 22313-1450
www.uspto.gov
DIW Aug-06

DAFFER MCDANIEL, LLP
P.O. BOX 684908
AUSTIN TX 78768

COPY MAILED
AUG 0 8 2006
OFFICE OF PETITIONS

| | | |
|---|---|---|
| In re Application of | : | |
| Huet et al. | : | DECISION ON PETITION |
| Application No. 10/954,968 | : | |
| Filed: 30 September, 2004 | : | |
| Atty Docket No. 5589-08900 | : | |

This is a decision on the petition, filed on 1 June, 2006, under 37 CFR 1.137(f) which is treated as a petition to revive the above-identified nonprovisional application under the unintentional provisions of 37 CFR 1.137(b).

The petition is **GRANTED**.

Petitioner states that the present nonprovisional application is the subject of a foreign or international application filed on 30 September, 2005. However, the U.S. Patent and Trademark Office was unintentionally not notified of this filing within 45 days subsequent to the filing of the subject application in a foreign country.

In view of the above, this application became abandoned pursuant to 35 U.S.C. § 122(b)(2)(B)(iii) and 37 CFR 1.213(c) for failure to timely notify the Office of the filing of an application in a foreign country, or under a multilateral international agreement, that requires publication of applications 18 months after filing.

A petition under 37 CFR 1.137(f) must be accompanied by:

(1) the reply which is met by the notification of such filing in a foreign country or under a multinational treaty;

(2) the petition fee as set forth in 37 CFR 1.17(m); and

(3) a statement that the entire delay in filing the required reply from the due date of the reply until the filing of a grantable petition was unintentional.

The present petition has been found to be in compliance with 37 CFR 1.137(f). Accordingly, the failure to timely notify the Office of a foreign or international filing within 45 days after the date of filing of such foreign or international application as provided by 35 U.S.C. § 122(b)(2)(B)(i) has been rescinded.

A Communication Regarding Rescission of Nonpublication Request and/or Notice of Foreign Filing, which sets forth the projected publication date of 16 November, 2006, is enclosed herewith.

The application is being referred to Technology Center Art Unit 2863 for examination in due course.

Any inquiries concerning this decision may be directed to the undersigned at 571.272.3231.

D Wood

Douglas I. Wood
Senior Petitions Attorney
Office of Petitions

Encl: Communication Regarding Rescission of Nonpublication Request and/or Notice of Foreign Filing

UNITED STATES PATENT AND TRADEMARK OFFICE

UNITED STATES DEPARTMENT OF COMMERCE
United States Patent and Trademark Office
Address: COMMISSIONER FOR PATENTS
P.O. Box 1450
Alexandria, Virginia 22313-1450
www.uspto.gov

| APPLICATION NUMBER | FILING/RECEIPT DATE | FIRST NAMED APPLICANT | ATTY. DOCKET NO. |
|---|---|---|---|
| 10/954,968 | 09/30/2004 | Patrick Huet | 5589-08900 |

**CONFIRMATION NO. 3264**

61507
DAFFER MCDANIEL, LLP
P.O. BOX 684908
AUSTIN, TX 78768

Date Mailed: 08/08/2006

## Communication Regarding Rescission Of Nonpublication Request and/or Notice of Foreign Filing

Applicant's rescission of the previously-filed nonpublication request and/or notice of foreign filing is acknowledged. The paper has been reflected in the Patent and Trademark Office's (USPTO's) computer records so that the earliest possible projected publication date can be assigned.

The projected publication date is 11/16/2006.

If applicant rescinded the nonpublication request before or on the date of "foreign filing,"[1] then no notice of foreign filing is required.

If applicant foreign filed the application after filing the above application and before filing the rescission, and the rescission did not also include a notice of foreign filing, then a notice of foreign filing (not merely a rescission) is required to be filed within 45 days of the date of foreign filing. See 35 U.S.C. § 122(b)(2)(B)(iii), and Clarification of the United States Patent and Trademark Office's Interpretation of the Provisions of 35 U.S.C. § 122(b)(2)(B)(ii)-(iv), 1272 Off. Gaz. Pat. Office 22 (July 1, 2003).

If a notice of foreign filing is required and is not filed within 45 days of the date of foreign filing, then the application becomes abandoned pursuant to 35 U.S.C. § 122(b)(2)(B)(iii). In this situation, applicant should either file a petition to revive or notify the Office that the application is abandoned. See 37 CFR 1.137(f). Any such petition to revive will be forwarded to the Office of Petitions for a decision. Note that the filing of the petition will not operate to stay any period of reply that may be running against the application.

Questions regarding petitions to revive should be directed to the Office of Petitions at (571) 272-3282. Questions regarding publications of patent applications should be directed to the patent application publication hotline at (703) 605-4283 or by e-mail pgpub@uspto.gov.

[1] Note, for purpose of this notice, that "foreign filing" means "filing an application directed to the same invention in another country, or under a multilateral international agreement, that requires publication of applications 18 months after filing".

UNITED STATES PATENT AND TRADEMARK OFFICE

COMMISSIONER FOR PATENTS
UNITED STATES PATENT AND TRADEMARK OFFICE
P.O. BOX 1450
ALEXANDRIA, VA 22313-1450
www.uspto.gov

Paper No.

NUTTER MCCLENNEN & FISH LLP
SEAPORT WEST
155 SEAPORT BOULEVARD
BOSTON MA 02210-2604

MAILED
JUN 24 2010
OFFICE OF PETITIONS

| | | |
|---|---|---|
| In re Application of | : | |
| Padmini et al. | : | |
| Application No. 10/954,971 | : | ON APPLICATION FOR |
| Filed: September 30, 2004 | : | PATENT TERM ADJUSTMENT |
| Atty Docket No. 101896-0301 | : | |
| Title: CHEMICAL TREATMENT FOR | : | |
| REMOVING CELLULAR AND NUCLEAR | : | |
| MATERIAL FROM NATURALLY | : | |
| OCCURRING EXTRACELLULAR | : | |
| MATRIX-BASED BIOMATERIALS | : | |

This is in response to the "REQUEST FOR RECONSIDERATION OF PATENT TERM ADJUSTMENT DETERMINATION UNDER 37 C.F.R. § 1.705(B)," filed February 3, 2010. Applicant submits that the correct patent term adjustment to be indicated on the patent is three hundred and forty-one (341) days, not two hundred and twenty-four (224) days as calculated by the Office as of the mailing of the initial determination of patent term adjustment. Applicant requests this correction solely on the basis that the Office will take in excess of three years to issue this patent.

As the instant application for patent term adjustment requests reconsideration of the patent term adjustment as it relates to the Office's failure to issue the patent within 3 years of the filing date, the application for patent term adjustment under 37 CFR 1.705(b) is **DISMISSED as PREMATURE**.

Knowledge of the actual date the patent issues is required to calculate the amount, if any, of additional patent term patentee is entitled to for Office failure to issue the patent within 3 years. See § 1.702(b). (This is true even where a request for continued examination (RCE) was filed). The computer will not undertake the § 1.702(b) calculation until the actual date of

issuance of the patent has been determined. Likewise, the computer will not calculate any further Office delay under § 1.702(a)(4) or applicant delay under § 1.704(c)(10) until the actual date of issuance of the patent has been determined. As such, the Office cannot make a determination on the correctness of the patent term adjustment until the patent has issued.

Requesting reconsideration of the patent term adjustment to be indicated on the patent under 37 CFR 1.705(b) based on the initial determination of patent term adjustment and a projected issuance date of the patent (or even the filing date of the request for continued examination) is premature. Accordingly, it is appropriate to dismiss as premature such a request.

Rather than file an application for patent term adjustment under 37 CFR 1.705(b) contesting the 37 CFR 1.702(b) calculation at the time of the mailing of the notice of allowance, applicant is advised that they may wait until the time of the issuance of the patent and file a request for reconsideration of the patent term adjustment pursuant to 37 CFR 1.705(d). As the USPTO does not calculate the amount of time earned pursuant to 37 CFR 1.702(b) until the time of the issuance of the patent, the Office will consider any request for reconsideration of the patent term adjustment due to an error in the calculation of 37 CFR 1.702(b) to be timely if the request for reconsideration is filed within two months of the issuance of the patent. However, as to all other bases for contesting the initial determination of patent term adjustment received with the notice of allowance, applicant must timely file an application for patent term adjustment prior to the payment of the issue fee.[1]

The Office acknowledges submission of the $200.00 fee set forth in 37 CFR 1.18(e). No additional fees are required.

---

[1] For example, if applicant disputes both the calculation of patent term adjustment under 37 CFR 1.702(a)(1) for Office failure to mail a first Office action or notice of allowance not later than fourteen months after the date on which the application was filed and under 37 CFR 1.702(b) for Office failure to issue a patent within three years of the actual filing date of the application, then applicant must still timely file an application for patent term adjustment prior to the payment of the issue fee to contest the calculation of Office delay in issuing a first Office action or notice of allowance. See 37 CFR 1.705(b) and 35 U.S.C. 154(b)(3)(B). A dispute as to the calculation of the §1.702(a)(1) period raised on request for reconsideration of patent term adjustment under 37 CFR 1.705(d) will be dismissed as untimely filed.

Any request for reconsideration of the patent term adjustment indicated on the patent must be timely filed within 2 months after issuance pursuant to 37 CFR 1.705(d) and must include payment of the required fee under 37 CFR 1.18(e).

The Office of Data Management has been advised of this decision. This application is being referred to the Office of Data Management for issuance of the patent.

Telephone inquiries regarding this decision should be directed to Senior Attorney Paul Shanoski at (571) 272-3225.

Anthony Knight
Director
Office of Petitions

UNITED STATES PATENT AND TRADEMARK OFFICE

Commissioner for Patents
United States Patent and Trademark Office
P.O. Box 1450
Alexandria, VA 22313-1450
www.uspto.gov

**ROCKWELL COLLINS, INC.**
**INTELLECTUAL PROPERTY DEPARTMENT**
**400 COLLINS ROAD NE**
**M/S 124-323**
**CEDAR RAPIDS, IA 52498**

**COPY MAILED**

MAY 1 2 2008

**OFFICE OF PETITIONS**

| | | |
|---|---|---|
| In re Application of | : | |
| Leo G. MALORATSKY et al. | : | |
| Application No. 10/954,974 | : | DECISION ON PETITION |
| Filed: September 30, 2004 | : | |
| Attorney Docket No. 04CR062/KE | : | |

This is a decision on the petition under the unintentional provisions of 37 CFR 1.137(b), filed January 09, 2008, to revive the above-identified application.

The petition is **GRANTED**.

The application became abandoned for failure to reply in a timely manner to the Office action under Ex parte Quayle, 1935 Dec. Comm'r Pat. 11(1935), mailed May 07, 2007, which set a shortened statutory period for reply of two (2) months. No extensions of time under the provisions of 37 CFR 1.136(a) were obtained. Accordingly, the application became abandoned on July 10, 2007.

The petition satisfies the conditions for revival pursuant to the provisions of 37 CFR 1.137(b) in that (1) the reply in the form of an amendment and supplemental declaration; (2) the petition fee of $1,540.00; and (3) the required statement of unintentional delay have been received. Accordingly, the reply to the Ex parte Quayle of May 07, 2007 is accepted as having been unintentionally delayed.

Telephone inquiries concerning this decision should be directed to the Michelle R. Eason at (571) 272-4231.

The application is being referred to the Technology Center AU 3662 for appropriate action on the concurrently filed amendment.

Michelle R. Eason
Paralegal Specialist
Office of Petitions

UNITED STATES PATENT AND TRADEMARK OFFICE

Commissioner for Patents
United States Patent and Trademark Office
P.O. Box 1450
Alexandria, VA 22313-1450
www.uspto.gov

PROCOPIO, CORY, HARGREAVES & SAVITCH LLP
530 B STREET, Suite 2100
SAN DIEGO, CA 92101

COPY MAILED

OCT 0 2 2006

OFFICE OF PETITIONS

| | | |
|---|---|---|
| In re Application of | : | |
| Richard S. Johnson, et al | : | |
| Application No. 10/954,975 | : | DECISION ON PETITION |
| Filed: September 2, 2005 | : | TO WITHDRAW |
| Attorney Docket No. 112476-PA03 | : | FROM RECORD |
| | : | |

This is a decision on the Request to Withdraw as attorney or agent of record under 37 C.F.R. § 1.36(b), filed September 02, 2005

The request is **NOT APPROVED**.

A grantable request to withdraw as attorney/agent of record must be signed by every attorney/agent seeking to withdraw or contain a clear indication that one attorney is signing on behalf of another/others. A request to withdraw will not be approved unless at least 30 (thirty) days would remain between the date of approval and the later of the expiration date of a time to file a response or the expiration date of the maximum time period which can be extended under 37 C.F.R. § 1.136(a).

The request cannot be approved because the Office cannot approve the request at this time since the reasons provided do not meet any of the conditions under the mandatory or permissive categories enumerated in 37 CFR 10.40. Section 10.40 of Title 37 of the Code of Federal Regulation states, "[a] practitioner shall not withdraw from employment in a proceeding before the Office without permission from the Office[.]" More specifically, 37 CFR 10.40 states, "[i]f paragraph (b) of this section is not applicable, a practitioner may not request permission to withdraw in matter pending before the Office unless such request or such withdrawal is" for one the permissive reasons listed in 37 CFR 10.40(c). The reasons set forth in the request do not meet any the conditions set forth in 37 CFR 10.40.

All future communications from the Office will continue to be directed to the above-listed address until otherwise notified by applicant.

Telephone inquiries concerning this decision should be directed to Charles Smoot 571-272-3299.

David Bucci
Petitions Examiner
Office of Petitions

cc: Gary Eastman
707 Broadway, Suite 1800
San Diego, CA 92101

UNITED STATES PATENT AND TRADEMARK OFFICE

Commissioner for Patents
United States Patent and Trademark Office
P.O. Box 1450
Alexandria, VA 22313-1450
www.uspto.gov

**Townsend and Townsend an Crew, LLP**
**Two Embarcadero Center**
**Eighth Floor**
**San Francisco, CA 94111-3834**

**COPY MAILED**

MAY 22 2009

**OFFICE OF PETITIONS**

| | | |
|---|---|---|
| In re Application of | : | |
| Madhu Yarlagadda et al. | : | |
| Application No. 10/954,982 | : | DECISION ON PETITION |
| Filed: September 29, 2004 | : | TO WITHDRAW |
| Attorney Docket No. 017887-006010US | : | FROM RECORD |
| | : | |

This is a decision on the Request to Withdraw as attorney or agent of record under 37 C.F.R. § 1.36(b), filed August 29, 2005.

The request is **moot because a revocation of power of attorney has been filed**.

A review of the file record indicates that the power of attorney to Philip H. Albert and all attorneys/agents of record has been revoked by the assignee of the patent application on September 21, 2005. Accordingly, the request to withdraw under 37 C.F.R. § 1.36(b) is moot.

All future communications from the Office will continue to be directed to the below-listed address until otherwise notified by applicant.

Telephone inquires concerning this decision should be directed to Kimberly Inabinet at 571-272-4618.

Kimberly Inabinet
Petitions Examiner
Office of Petitions

cc: Yahoo! Inc.
c/o Darby & Darby P.C.
P.O. Box 770
Church Street Station
New York, NY 10008-0770

UNITED STATES PATENT AND TRADEMARK OFFICE

Commissioner for Patents
United States Patent and Trademark Office
P.O. Box 1450
Alexandria, VA 22313-1450
www.uspto.gov
AVE

STERNE, KESSLER, GOLDSTEIN & POX, PLLC
1100 NEW YORK AVENUE, NW
WASHINGTRON, DC. 20005

COPY MAILED

SEP 02 2008

Applicant: Kissell
Appl. No.: 10/954,988
Filing Date: September 30, 2004
Title: SYNCHRONIZED STORAGE PROVIDING MULTIPLE SYNCHRONIZATION SEMANTICS
Attorney Docket No.: 1778.3360000(0195.00US)
Pub. No.: 2007/0186028 A2
Pub. Date: August 9, 2007

This is a decision on the request for a corrected patent application publication under 37 CFR 1.221(b), received on August 27, 2007, for the above-identified application.

The request is DISMISSED.

Applicant requests that the application be republished because the patent application republication contains material errors on the front page of the publication, as the benefit claim data is erroneous.

37 CFR 1.221 (b) is applicable "only when the Office makes a material mistake which is apparent from Office records.... Any request for a corrected publication or revised patent application publication other than provided as provided in paragraph (a) of this section must be filed within two months from the date of the patent application publication. This period is not extendable." A material mistake must affect the public's ability to appreciate the technical disclosure of the patent application publication, to determine the scope of the patent application publication, or to determine the scope of the provisional rights that an applicant may seek to enforce upon issuance of a patent. [1]

Applicant states that the published application did not publish with the priority information, which was reflected on the corrected filing receipt mailed February 15, 2006. Applicant has not specifically pointed out any errors in the printed priority information. The republication was published with the priority information provided in the application data sheet filed with the request for republication via EFS-Web.

It is noted that the benefit claim contained on the first two pages of the specification in paragraphs 1 through 5 does not comply with 37 CFR 1.78. The sentences are not proper

[1] Changes to Implement Eighteen-Month Publication of Patent Applications, 65 FR 57023, 57038 (Sept. 20, 2000), 1239, Off. Gaz. Pat. Office Notices 63, 75 (Oct. 10, 2000) (final rule).

sentences as they include tables and incorporate the content of other paragraphs and they do not include specific references to the earlier filed applications.

Inquiries relating to this matter may be directed to Mark Polutta at (571) 272-7709.

Mark Polutta
Senior Legal Advisor
Office of Patent Legal Administration
Office of the Deputy Commissioner
for Patent Examination Policy

## SPE RESPONSE FOR CERTIFICATE OF CORRECTION

**DATE** : 8/4/08

**Paper No.:** —

**TO SPE OF** : ART UNIT 3765

**SUBJECT** : Request for Certificate of Correction for Appl. No.: 10/955001 Patent No: 7309276 B2

A response is requested with respect to a request for a certificate of correction.

With respect to the change(s) requested to correct Office and/or Applicant's errors, should the patent read as shown in the certificate of correction attached herewith or the COCIN document(s), in IFW images for the above-identified patented application? No new matter should be introduced, nor should the scope or meaning of the claims be changed.

If the response is for an IFW, within **7** days, please complete and forward the response, to the employee (named below) via scanning into application images, using document code **COCX**.

If the response is for a paper file wrapper, please complete the response and forward the response with the paper file wrapper, to the employee (named below), within **7** days, to:

**Certificates of Correction Branch (CofC)**
**South Tower - 9A22**
**Palm Location 7580**

*VIRGINIA TOLBERT*
**Certificates of Correction Branch**
**703-308-9390 ext. 113**

**Thank You For Your Assistance**

**The request for issuing the above-identified correction(s) is hereby:**
Note your decision on the appropriate box.

- ☒ **Approved** — **All** changes apply.
- ☐ **Approved in Part** — Specify below which changes **do not** apply.
- ☐ **Denied** — State the reasons for denial below.

**Comments:** _____

/Gary L. Welch/
**SPE**

3765
**Art Unit**

## SPE RESPONSE FOR CERTIFICATE OF CORRECTION

**DATE** : 8/4/08

**Paper No.:** —

**TO SPE OF** : ART UNIT 3765

**SUBJECT** : Request for Certificate of Correction for Appl. No.: 10/955001 Patent No: 7309276 B2

A response is requested with respect to a request for a certificate of correction.

With respect to the change(s) requested to correct Office and/or Applicant's errors, should the patent read as shown in the certificate of correction attached herewith or the COCIN document(s), in IFW images for the above-identified patented application? No new matter should be introduced, nor should the scope or meaning of the claims be changed.

If the response is for an IFW, within **7** days, please complete and forward the response, to the employee (named below) via scanning into application images, using document code **COCX**.

If the response is for a paper file wrapper, please complete the response and forward the response with the paper file wrapper, to the employee (named below), within **7** days, to:

**Certificates of Correction Branch (CofC)**
**South Tower - 9A22**
**Palm Location 7580**

*VIRGINIA TOLBERT*
**Certificates of Correction Branch**
**703-308-9390 ext. 113**

**Thank You For Your Assistance**

**The request for issuing the above-identified correction(s) is hereby:**
Note your decision on the appropriate box.

- ☒ 1 **Approved** — **All** changes apply.
- ☐ **Approved in Part** — Specify below which changes **do not** apply.
- ☐ **Denied** — State the reasons for denial below.

**Comments:** _____

/Gary L. Welch/ 3
**SPE**

3765 2
**Art Unit**

UNITED STATES PATENT AND TRADEMARK OFFICE

Commissioner for Patents
United States Patent and Trademark Office
P.O. Box 1450
Alexandria, VA 22313-1450
www.uspto.gov

COPY MAILED

MAR 16 2007

OFFICE OF PETITIONS

Martin & Henson, P.C.
9250 W. 5th Avenue
Suite 200
Lakewood, CO 80226

| | | |
|---|---|---|
| In re Application of | : | |
| James W. Conley et al. | : | |
| Application No. 10/955,009 | : | DECISION ON PETITION |
| Filed: September 29, 2004 | : | TO WITHDRAW |
| Attorney Docket No. 2090 | : | FROM RECORD |

This is a decision on the Request to Withdraw as attorney or agent of record under 37 C.F.R. § 1.36(b), filed August 1, 2006.

The request is **APPROVED**.

A grantable request to withdraw as attorney/agent of record must be signed by every attorney/agent seeking to withdraw or contain a clear indication that one attorney is signing on behalf of another/others. A request to withdraw will not be approved unless at least 30 (thirty) days would remain between the date of approval and the later of the expiration date of a time to file a response or the expiration date of the maximum time period which can be extended under 37 C.F.R. § 1.136(a).

The request was signed by Michael R. Henson on behalf of all attorneys of record.

All attorneys/agents have been withdrawn.

Applicant is reminded that there is no attorney of record at this time.

The correspondence address of record has been changed and the new correspondence address is the address indicated below.

There is no outstanding Office action at this time.

Telephone inquiries concerning this decision should be directed to Terri Williams at 571-272-2991.

T. Williams

Terri Williams
Petitions Examiner
Office of Petitions

cc: **Sytex, Inc.**
**c/o Barbara Loscalzo**
**Vice President and General Counsel**
**Lockheed Martin Information & Technology Services**
**2339 Route 70 West**
**Cherry Hill, NJ 08002**

UNITED STATES PATENT AND TRADEMARK OFFICE

UNITED STATES DEPARTMENT OF COMMERCE
United States Patent and Trademark Office
Address: COMMISSIONER FOR PATENTS
P.O. Box 1450
Alexandria, Virginia 22313-1450
www.uspto.gov

| APPLICATION NUMBER | FILING OR 371 (c) DATE | FIRST NAMED APPLICANT | ATTY. DOCKET NO./TITLE |
|---|---|---|---|
| 10/955,009 | 09/29/2004 | James W. Conley | 2090 |

**CONFIRMATION NO. 2106**

*OC000000022935761*

*OC000000022935761*

24264
MARTIN & HENSON, P.C.
9250 W 5TH AVENUE
SUITE 200
LAKEWOOD, CO 80226

Date Mailed: 03/16/2007

## NOTICE REGARDING CHANGE OF POWER OF ATTORNEY

This is in response to the Power of Attorney filed 08/01/2006.

- The withdrawal as attorney in this application has been accepted. Future correspondence will be mailed to the new address of record. 37 CFR 1.33.

---

Terri S. Williams

Office of Initial Patent Examination (571) 272-4000, or 1-800-PTO-9199

FORMER ATTORNEY/AGENT COPY

OIPE JC10
JAN 2 5 2005
PATENT & TRADEMARK OFFICE

FILE COPY FW

PATENT

Attorney Docket No. MRSHP013

IN THE UNITED STATES PATENT AND TRADEMARK OFFICE

| | |
|---|---|
| In re the application of<br>MARSHALL et al.<br>Application No.:<br>10/955,025<br>Filed: Sept. 29, 2004<br>For: DIGITAL MEDIA CREATED USING ION BEAM TECHNOLOGY | Group Art Unit: 1772<br>Examiner: Unassigned<br>Attorney Docket No.: MRSHP013<br>Date: January 20, 2005 |

CERTIFICATE OF MAILING

I hereby certify that this correspondence is being deposited with the United States Postal Service as First Class Mail in an envelope addressed to: Commissioner for Patents, P.O. Box 1450, Alexandria, VA 22313-1450 on January 20, 2005.

Signed: Nancy N. Rushton
Nancy N. Rushton

Commissioner for Patents
P.O. Box 1450
Alexandria, VA 22313-1450

PETITION TO MAKE SPECIAL
37 C.F.R. 1.102 and MPEP § 708.02(VIII)

Sir:

**1. Petition – MPEP § 708.02(VIII)(A):**

Applicant hereby petitions to make this new application special. This application has not received any examination by the Examiner.

**PETITION GRANTED**

Richard Crispino
Special Program Examiner
TC 1700
APR 2 6 2005

UNITED STATES PATENT AND TRADEMARK OFFICE

Commissioner for Patents
United States Patent and Trademark Office
P.O. Box 1450
Alexandria, VA 22313-1450
www.uspto.gov

CHARLES MARSHALL
221 NORTH MYERS STREET, #A
BURBANK CA 91506

**COPY MAILED**

AUG 3 1 2006

**OFFICE OF PETITIONS**

In re Application of
Charles Marshall et al.
Application No. 10/955,025
Filed: September 29, 2004
Attorney Docket No.: MRSHP013

ON PETITION

This is a decision on the petition filed March 30, 2006 under 37 CFR 1.137(b),[1] to revive the above-identified application.

The petition is **GRANTED**.

This application became abandoned for failure to timely reply to the non-Final Office Action mailed June 29, 2005. A shortened statutory period of three months was set for replying to the non-Final Office Action. No extensions of time having been requested, this application became abandoned September 30, 2005. Accordingly, a Notice of Abandonment was mailed on January 12, 2006.

This matter is being referred to Technology Center 1774 for appropriate action on the amendment filed March 30, 2006.

Telephone inquiries concerning this matter should be directed to the undersigned Petitions Attorney at (571) 272-3212.

Patricia Faison-Ball
Senior Petitions Attorney
Office of Petitions

---

[1] Effective December 1, 1997, the provisions of 37 CFR 1.137(b) now provide that where the delay in reply was unintentional, a petition may be filed to revive an abandoned application or a lapsed patent pursuant to 37 CFR 1.137(b). A grantable petition filed under the provisions of 37 CFR 1.137(b) must be accompanied by:

(1) the required reply, unless previously filed. In a nonprovisional application abandoned for failure to prosecute, the required reply may be met by the filing of a continuing application. In a nonprovisional application filed on or after June 8, 1995, and abandoned for failure to prosecute, the required reply may also be met by the filing of a request for continued examination in compliance with § 1.114. In an application or patent, abandoned or lapsed for failure to pay the issue fee or any portion thereof, the required reply must be the payment of the issue fee or any outstanding balance thereof. In an application abandoned for failure to pay the publication fee, the required reply must include payment of the publication fee.

(2) the petition fee as set forth in 37 CFR 1.17(m);

(3) a statement that the entire delay in filing the required reply from the due date for the reply until the filing of a grantable petition pursuant to 37 CFR 1.137(b) was unintentional. The Commissioner may required additional information where there is a question whether the delay was unintentional; and

(4) any terminal disclaimer (and fee as set forth in 37 CFR 1.20(d)) required pursuant to 37 CFR 1.137(c)).

UNITED STATES PATENT AND TRADEMARK OFFICE

Commissioner for Patents
United States Patent and Trademark Office
P.O. Box 1450
Alexandria, VA 22313-1450
www.uspto.gov

**ZILKA-KOTAB, PC**
**P.O. BOX 721120**
**SAN JOSE, CA 95172-1120**

**COPY MAILED**

MAY 1 2 2008

**OFFICE OF PETITIONS**

In re Application of :

**MARSHALL**, et al. :
Application No. 10/955,025 : DECISION ON PETITION
Filed: September 29, 2004 : TO WITHDRAW
Attorney Docket No. **MRSHP013** : FROM RECORD

This is a decision on the Request to Withdraw as attorney or agent of record under 37 C.F.R. § 1.36(b), filed March 3, 2008.

The request is **APPROVED.**

A grantable request to withdraw as attorney/agent of record must be signed by every attorney/agent seeking to withdraw or contain a clear indication that one attorney is signing on behalf of another/others. A request to withdraw will not be approved unless at least 30 (thirty) days would remain between the date of approval and the later of the expiration date of a time to file a response or the expiration date of the maximum time period which can be extended under 37 C.F.R. § 1.136(a).

The request was signed by Dominic M. Kotab on behalf of all attorneys of record. All attorneys/agents associated have been withdrawn. Applicant is reminded that there is no attorney of record at this time.

The request to change the correspondence of record is not acceptable as the requested correspondence address is not that of: (1) the first named signing inventor; or (2) an intervening assignee of the entire interest under 37 C.F.R 3.71. All future communications from the Office will be directed to the first named signing inventor at the first copied address below until otherwise properly notified by the applicant.

Telephone inquiries concerning this decision should be directed to the undersigned at (571) 272-7253.

Monica A. Graves
Petitions Examiner
Office of Petitions

cc: **CHARLES MARSHALL**
**221 NORTH MYERS STREET, #A**
**BURBANK, CA 91506**

cc: **MARSHALL MEDIA, INC.**
**655 NORTH CENTRAL AVENUE, 17TH FLOOR**
**GLENDALE, CA 91203**

UNITED STATES PATENT AND TRADEMARK OFFICE

COMMISSIONER FOR PATENTS
UNITED STATES PATENT AND TRADEMARK OFFICE
P.O. BOX 1450
ALEXANDRIA, VA 22313-1450
www.uspto.gov

BROWN RAYSMAN MILLSTEIN
FELDER & STEINER LLP
900 THIRD AVENUE
NEW YORK, NY 10022

COPY MAILED

SEP 2 0 2005

OFFICE OF PETITIONS

| | | |
|---|---|---|
| In re Application of | : | |
| Jonathan Schull | : | |
| Application No. 10/955,034 | : | DECISION ON PETITION |
| Filed: September 30, 2004 | : | TO MAKE SPECIAL |
| Attorney Docket No. 4861/14ACON | : | 37 CFR 1.102(d) |

This is a decision on the petition under 37 CFR §1.102(d), filed November 24, 2004 to make the above-identified application special.

The petition requests that the above-identified application be made special under the accelerated examination procedure set forth in M.P.E.P. § 708.02, Section II: Infringement.

The petition is **GRANTED.**

A grantable petition to make an application special under 37 CFR §1.102(d) and MPEP §708.02, Section II: Infringement, must be accompanied by the required fee pursuant to 37 CFR 1.17(h) and a statement by the applicant, assignee, or attorney/agent registered to practice before the office alleging:

> (A) That there is an infringing device or product actually on the market or method in use;
>
> (B) That a rigid comparison of the alleged infringing device, product, or method with the claims of the application has been made, and that, in his or her opinion, some of the claims are unquestionably infringed; and
>
> (C) That he or she has made or caused to be made a careful and thorough search of the prior art or has a good knowledge of the pertinent prior art.
>
> Applicant must provide one copy of each of the references deemed most closely related to the subject matter encompassed by the claims if said references are not already of record.

The petition filed November 24, 2004 did not provide a copy of each of the references deemed most closely related to the subject matter encompassed by the claims or a statement that each reference most closely related to the subject matter encompassed by the claims is already of record as set forth in MPEP 708.02.II. Subsequently, two Information Disclosure Statements (IDS's) was filed on April 11, 2005 and May 9, 2005 with the above-identified application. The references supplied in the IDS's are being treated as having been deemed by petitioner to be most closely related to the subject matter encompassed by the claims. Petitioner must notify the Office if this is **not** a correct interpretation of the references supplied by the IDS's.

The petition complies with all the above stated requirements. Accordingly, the above-identified application has been accorded "special" status.

There is no indication that the person signing the petition was ever given a power of attorney or authorization of agent to prosecute the application. If the person signing the petition desires to receive future correspondence regarding this application, the appropriate power of attorney or authorization of agent must be submitted.

Telephone inquires concerning this decision should be directed to Irvin Dingle at (571) 272-3210.

All other inquires concerning either the examination or status of the application should be directed to Technology Center 3600 at (571) 272-3600.

The application is being forwarded to the Technology Center Art Unit 3621 for expedited prosecution.

Denise Pothier
Petitions Examiner
Office of Petitions

UNITED STATES PATENT AND TRADEMARK OFFICE

Commissioner for Patents
United States Patent and Trademark Office
P.O. Box 1450
Alexandria, VA 22313-1450
www.uspto.gov

COPY MAILED

SEP 29 2009

OFFICE OF PETITIONS

**THELEN REID BROWN RAYSMAN & STEINER LLP**
**PO BOX 640640**
**SAN JOSE, CA 95164-0640**

| | | |
|---|---|---|
| In re Application of | : | |
| **Jonathan SCHULL** | : | |
| Application No. 10/955,034 | : | DECISION ON PETITION |
| Filed: September 30, 2004 | : | UNDER 37 CFR 1.181 |
| Attorney Docket No. **604861-17** | : | |

This is a decision on the petition, filed June 30, 2009, which is being treated as a petition under 37 CFR 1.181 (no fee) requesting withdrawal of the holding of abandonment in the above-identified application.

The petition is **DISMISSED**.

This application was held abandoned for failure to reply within the meaning of 37 CFR 1.113 to the Final Office action, mailed February 26, 2008, which set a three (3) month shortened statutory period for reply. No extension of time under the provisions of 37 CFR 1.136(a) was obtained. Accordingly, the application became abandoned on May 27, 2008. A Notice of Abandonment was mailed on October 20, 2008.

Petitioner argues that the abandonment should be withdrawn since the examiner, in an Interview Summary dated August 27, 2008, withdrew the final Office action. Accordingly, petitioner requests that the abandonment be withdrawn and a new, non-final action be issued.

Petitioner should note that regardless of what the examiner stated, the Interview Summary mailed October 14, 2008, did not operate to avoid the above application from becoming abandoned. It was petitioner's responsibility to file a proper reply within the meaning of 37 CFR 1.113 to the final Office action mailed on February 26, 2008. Petitioner should not have allowed the maximum extendable period for reply to expire while awaiting further action from the Office.

Pursuant to 35 U.S.C. 133, "[u]pon failure of the applicant to prosecute the application within six months after any action therein, of which notice has been given or mailed to

the application, or within such shorter time, not less than thirty days, as fixed by the Director in such action, the application shall be regarded as abandoned by the parties thereto, unless it be shown to satisfactory of the Director that such delay was unavoidable.

The application was properly held abandoned and will remain abandoned until petitioner takes some other action in the above application to continue prosecution.

Petitioner is encouraged to consider filing a petition under 37 CFR 1.137(a) to revive an unavoidably abandoned application or a petition under 37 CFR 1.137(b) to revive an unintentionally abandoned application, instead of filing a renewed petition under 37 CFR 1.181.

A grantable petition under 37 CFR 1.137(a) must be accompanied by: (1) the required reply, unless previously filed; (2) the petition fee as set forth in 37 CFR 1.17(1); (3) a showing to the satisfaction of the Director that the entire delay in filing the required reply from the due date for the reply until the filing of a grantable petition pursuant to 37 CFR 1.137(a) was unavoidable; and (4) any terminal disclaimer (and fee as set forth in 37 CFR 1.20(d)) required pursuant to 37 CFR 1.137(d).

A grantable petition under 37 CFR 1.137(b) must be accompanied by: (1) the required reply, unless previously filed; (2) the petition fee as set forth in 37 CFR 1.17(m); (3) a statement that the entire delay in filing the required reply from the due date for the reply until the filing of a grantable petition pursuant to 37 CFR 1.137(b) was unintentional; and (4) any terminal disclaimer (and fee as set forth in 37 CFR 1.20(d)) required by CFR 1.137(d). Where there is a question as to whether either the abandonment or the delay in filing a petition under 37 CFR 1.137 was unintentional, the Director may require additional information. See MPEP 711.03(c)(II)(C) and (D).

Public Law 97-247, § 3, 96 Stat. 317 (1982), which revised patent and trademark fees, amended 35 U.S.C. § 41(a)(7) to provide for the revival of an "unintentionally" abandoned application without a showing that the delay in prosecution or in late payment of the issue fee was "unavoidable." This amendment to 35 U.S.C. § 41(a)(7) has been implemented in 37 CFR 1.137(b). An "unintentional" petition under 37 CFR 1.137(b) must be accompanied by the $1620 petition fee.

Further correspondence with respect to this matter should be delivered through one of the following mediums:

By mail: Mail Stop PETITIONS
Commissioner for Patents
Post Office Box 1450
Alexandria, VA 22313-1450

By hand: Customer Service Window
Mail Stop Petitions
Randolph Building
401 Dulany Street
Alexandria, VA 22314

By fax: (571) 273-8300
ATTN: Office of Petitions

Any questions concerning this matter may be directed to Monica A. Graves at (571) 272-7253.

Brian W. Brown
Petitions Examiner
Office of Petitions

UNITED STATES PATENT AND TRADEMARK OFFICE

Commissioner for Patents
United States Patent and Trademark Office
P.O. Box 1450
Alexandria, VA 22313-1450
www.uspto.gov

Nixon Peabody LLP
PO BOX 60610
Palo Alo CA 94306

MAILED

FEB 23 2010

OFFICE OF PETITIONS

In re Application of
Jonathan Schull
Application No. 10/955,034
Filed: September 30, 2004
Attorney Docket No. **604861-17**

DECISION ON PETITION

This is a decision on the petition under the unintentional provisions of 37 CFR 1.137(b), filed October 22, 2009, to revive the above-identified application.

The petition is **GRANTED**.

The application became abandoned for failure to timely file a reply within the meaning of 37 CFR 1.113 to the final Office action of February 26, 2008. The proposed reply required for consideration of a petition to revive must be a Notice of Appeal (and appeal fee required by 37 CFR 41.20(b)(2), an amendment that *prima facie* places the application in condition for allowance, a Request for Continued Examination and submission (37 CFR 1.114), or the filing of a continuing application under 37 CFR 1.53(b). See MPEP 711.03(c)(III)(A)(2). No extensions of time pursuant to the provisions of 37 CFR 1.136(a) was obtained. Accordingly, the date of abandonment of this application is May 27, 2008.

The petition satisfies the requirements of 37 CFR 1.137(b) in that petitioner has supplied (1) the reply in the form of a Request for Continued Examination (RCE) and fee of $810, and the submission required by 37 CFR 1.114; (2) the petition fee of $1,620; and (3) a proper statement of unintentional delay.

It is not apparent whether the person signing the statement of unintentional delay was in a position to have firsthand or direct knowledge of the facts and circumstances of the delay at issue. Nevertheless, such statement is being treated as having been made as the result of a reasonable inquiry into the facts and circumstances of such delay. See 37 CFR 10.18(b) and Changes to Patent Practice and Procedure; Final Rule Notice, 62 Fed. Reg. 53131, 53178 (October 10, 1997), 1203 Off. Gaz. Pat. Office 63, 103 (October 21, 1997). In the event that such an inquiry has not been made, petitioner must make such an inquiry. If such inquiry results in the discovery that it is not correct

that the entire delay in filing the required reply from the due date for the reply until the filing of a grantable petition pursuant to 37 CFR 1.137(b) was unintentional, petitioner must notify the Office.

There is no indication that the person signing the petition was ever given a power of attorney to prosecute the application. If the person signing the petition desires to receive future correspondence regarding this application, the appropriate power of attorney document must be submitted. While a courtesy copy of this decision is being mailed to the person signing the petition, all future correspondence will be directed to the address currently of record until appropriate instructions are received.

Telephone inquiries concerning this decision should be directed to the undersigned at (571) 272-4584.

This application is being referred to Technology Center AU 3621 for processing of the RCE and for appropriate action by the Examiner in the normal course of business on the amendment submitted in accordance with 37 CFR 1.114.

JoAnne Burke
Petitions Examiner
Office of Petitions

cc: John R. Mattingly
1800 Diagonal Road
Suite 370
Alexandria, VA 22314

UNITED STATES PATENT AND TRADEMARK OFFICE

UNITED STATES DEPARTMENT OF COMMERCE
United States Patent and Trademark Office
Address: COMMISSIONER FOR PATENTS
P.O. Box 1450
Alexandria, Virginia 22313-1450
www.uspto.gov

MCANDREWS HELD & MALLOY, LTD
500 WEST MADISON STREET
SUITE 3400
CHICAGO, IL 60661

Mail Date: 04/21/2010

| | | |
|---|---|---|
| **Applicant** | : Guang-Ting Shih | : DECISION ON REQUEST FOR |
| **Patent Number** | : 7595808 | : RECALCULATION of PATENT |
| **Issue Date** | : 09/29/2009 | : TERM ADJUSTMENT IN VIEW |
| **Appliction No** | : 10/955,047 | : OF WYETH AND NOTICE OF INTENT TO |
| **Filed** | : 09/30/2004 | : ISSUE CERTIFICATE OF CORRECTION |
| | | : |

The Request for Recalculation is **GRANTED** to the extent indicated.

The patent term adjustment has been determined to be **0** days. The USPTO will *sua sponte* issue a certificate of correction reflecting the amount of PTA days determined by the recalculation.

Prior to the issuance of the certificate of correction, the USPTO will afford patentee an opportunity to be heard and request reconsideration. Accordingly, patentee has **one month or thirty (30) days**, whichever is longer, to file a request for reconsideration of this patent term adjustment calculation. See 35 U.S.C. 154(b)(3)(B)(ii) and 37 CFR 1.322(a)(4). No extensions of time will be granted under 37 CFR 1.136.

Patentee should use document code PET.OP if electronically filing a request for reconsideration of this patent term adjustment calculation. The patentee must also include the information required by 37 CFR 1.705(b)(2) and the fee required by 37 CFR 1.18(e). If patentee does not file a timely request for reconsideration of this patent term adjustment calculation including the information required by 37 CFR 1.705(b)(2) and the fee required by 37 CFR 1.18(e), the USPTO will issue a certificate of correction reflecting the PTA determination noted above.

Patentee should be aware that in order to preserve the right to review in the United States District Court for the District of Columbia of the USPTO patent term adjustment determination, patentee must ensure that he or she also take the steps required under 35 U.S.C. 154(b)(4)(A) in a timely manner. Nothing in the request for recalculation should be construed as providing an alternative time frame for commencing a civil action under 35 U.S.C. 154(b)(4)(A).

Any questions concerning this decision should be directed to the Office of Patent Legal Administration at 571-272-7702.

UNITED STATES PATENT AND TRADEMARK OFFICE

UNITED STATES DEPARTMENT OF COMMERCE
United States Patent and Trademark Office
Address: COMMISSIONER FOR PATENTS
P.O. Box 1450
Alexandria, Virginia 22313-1450
www.uspto.gov

SHEPPARD MULLIN RICHTER & HAMPTON LLP
333 South Hope Street, 48th Floor
Los Angeles, CA 90071-1448

Mail Date: 04/21/2010

| | | |
|---|---|---|
| **Applicant** | : Vishnu Govind Kamat | : DECISION ON REQUEST FOR |
| **Patent Number** | : 7669158 | : RECALCULATION of PATENT |
| **Issue Date** | : 02/23/2010 | : TERM ADJUSTMENT IN VIEW |
| **Appliction No** | : 10/955,067 | : OF WYETH AND NOTICE OF INTENT TO |
| **Filed** | : 09/30/2004 | : ISSUE CERTIFICATE OF CORRECTION |
| | | : |

The Request for Recalculation is **GRANTED** to the extent indicated.

The patent term adjustment has been determined to be **590** days. The USPTO will *sua sponte* issue a certificate of correction reflecting the amount of PTA days determined by the recalculation.

Prior to the issuance of the certificate of correction, the USPTO will afford patentee an opportunity to be heard and request reconsideration. Accordingly, patentee has **one month or thirty (30) days**, whichever is longer, to file a request for reconsideration of this patent term adjustment calculation. See 35 U.S.C. 154(b)(3)(B)(ii) and 37 CFR 1.322(a)(4). No extensions of time will be granted under 37 CFR 1.136.

Patentee should use document code PET.OP if electronically filing a request for reconsideration of this patent term adjustment calculation. The patentee must also include the information required by 37 CFR 1.705(b)(2) and the fee required by 37 CFR 1.18(e). If patentee does not file a timely request for reconsideration of this patent term adjustment calculation including the information required by 37 CFR 1.705(b)(2) and the fee required by 37 CFR 1.18(e), the USPTO will issue a certificate of correction reflecting the PTA determination noted above.

Patentee should be aware that in order to preserve the right to review in the United States District Court for the District of Columbia of the USPTO patent term adjustment determination, patentee must ensure that he or she also take the steps required under 35 U.S.C. 154(b)(4)(A) in a timely manner. Nothing in the request for recalculation should be construed as providing an alternative time frame for commencing a civil action under 35 U.S.C. 154(b)(4)(A).

Any questions concerning this decision should be directed to the Office of Patent Legal Administration at 571-272-7702.

UNITED STATES PATENT AND TRADEMARK OFFICE

Commissioner for Patents
United States Patent and Trademark Office
P.O. Box 1450
Alexandria, VA 22313-1450
www.uspto.gov

JUN 28 2005

BROWN, RAYSMAN, MILLSTEIN,
FELDER & STEINER LLP
900 THIRD AVENUE
NEW YORK, NY 10022

| | | |
|---|---|---|
| In re application of<br>Jonathan Schull<br>Application No. 10/955,069<br>Filed: September 30, 2004<br>For: SYSTEM AND METHOD FOR CREATING AND RUNNING PROTECTED INFORMATION | : | **DECISION ON PETITION TO MAKE SPECIAL (INFRINGEMENT)** |

This is a decision on the petition under 37 C.F.R § 1.102(d) filed November 24, 2004 to make the above-identified application special.

The petition requests that the above-identified application be made special under the procedure set forth in M.P.E.P. § 708.02, item II: Infringement.

MPEP 708.02 states that a Petition to Make Special based on Infringement must have the following: (1) the appropriate petition fee under 37 CFR 1.17(i); (2) a statement by the assignee, applicant, or attorney alleging: (A) that there is an infringing device or product actually on the market or method in use; (B) that a rigid comparison of the alleged infringing device, product or method with the claims of the application has been made, and that, in his or her opinion, some of the claims are unquestionably infringed; and (C) that he or she has made a careful and thorough search of the prior art, or has good knowledge of the prior art, and has sent a copy of the references deemed most closely related to the subject matter encompassed by the claims.

The petition filed November 24, 2004 meets all of the requirements above and, therefore, the petition is **GRANTED**.

The examiner is directed (1) to make an interference search for possible interfering applications; (2) to promptly examine this application out of turn; and (3) if any interfering application is discovered, to examine such application simultaneously and state in the first official letter of such application that it is being taken out of turn because of a possible interference.

Petitioner is advised that this application will continue to be special, throughout its entire prosecution and pendency, including interference and appeal, if any, only if petitioner makes a prompt *bona fide* effort, in response to each Office action, to place the application in condition for allowance, even if it is necessary to conduct an interview with the examiner to accomplish this purpose.

Steven N. Meyers
Special Programs Examiner
Technology Center 3600
(571) 272-6611

SNM/dew: 06/27/05

UNITED STATES PATENT AND TRADEMARK OFFICE

Commissioner for Patents
United States Patent and Trademark Office
P.O. Box 1450
Alexandria, VA 22313-1450
www.uspto.gov

PHILIP S. JOHNSON
JOHNSON & JOHNSON
ONE JOHNSON & JOHNSON PLAZA
NEW BRUNSWICK NJ 08933-7003

**COPY MAILED**

MAY 03 2006

**OFFICE OF PETITIONS**
ON PETITION

In re Application of :
J. Lee Pellegrino-Gensey :
Application No. 10/955,100 :
Filed: September 30, 2004 :
Attorney Docket No. LFS5061US :

This is a decision on the petition filed April 25, 2006 under 37 CFR 1.137(b), to revive the above-identified application.

The petition is **GRANTED**.

The instant application became abandoned on January 13, 2005, for failure to timely reply to the Notice to File Missing Parts, mailed November 12, 2004, which set a two (2) month shortened statutory period for reply. No extensions of the time for reply in accordance with 37 CFR 1.136(a) were obtained. Accordingly, a Notice of Abandonment was mailed August 18, 2005.

The filing of the response to the Notice to File Missing Parts mailed November 12, 2004 is acknowledged.

Additionally, the record reveals that a Terminal Disclaimer was filed with the instant petition. The terminal disclaimer however, will not be entered since the application was filed after June 8, 1995 and a terminal disclaimer is not required. In view thereof, no fees are due and none have been charged.

This matter is being referred to the Office of Initial Patent Examination for further pre-examination processing.

Telephone inquiries concerning this matter may be directed to the undersigned Petitions Attorney at (571) 272-3212.

Patricia Faison-Ball

Patricia Faison-Ball
Senior Petitions Attorney
Office of Petitions

UNITED STATES PATENT AND TRADEMARK OFFICE

Commissioner for Patents
United States Patent and Trademark Office
P.O. Box 1450
Alexandria, VA 22313-1450
www.uspto.gov

**COPY MAILED**

MAR 09 2007

**OFFICE OF PETITIONS**

Humberto F Vargas
9806 Varus Place
Upper Malboro, MD 20772

In re Application of Vargas :
Application No. 10/955,112 : Decision on Petition
Filing Date: November 14, 2005 :
For: Car Tents :

This is a decision on the petition under 37 CFR 1.181, filed December 7, 2006, to withdraw the holding of abandonment, which is being treated as a petition to withdraw the termination of proceedings.

The petition is **granted**

A Notice of Incomplete Nonprovisional Application was mailed March 1, 2005. The Notice required the submission of a claim. The Office did not receive a reply to the Notice.

A Notice of Termination of Proceedings was mailed August 18, 2005.

A claim was filed November 14, 2005.

The instant petition was filed December 7, 2006.

The Office of Initial Patent Examination withdrew the Notice of Termination on December 27, 2006. Therefore, the petition is granted.

Telephone inquiries regarding this communication should be directed to Petitions Attorney Steven Brantley at (571) 272-3203.

Charles Steven Brantley
Senior Petitions Attorney
Office of Petitions

UNITED STATES PATENT AND TRADEMARK OFFICE

COMMISSIONER FOR PATENTS
UNITED STATES PATENT AND TRADEMARK OFFICE
P.O. BOX 1450
ALEXANDRIA, VA 22313-1450
www.uspto.gov

BAKER & BOTTS
30 ROCKEFELLER PLAZA
NEW YORK, NY 10112

COPY MAILED

MAR 3 1 2005

OFFICE OF PETITIONS

In re Application of
Fisher, et al.
Application No.: 10/955,119
Filed: September 30, 2004
Docket: 34592-C-PCT-USA-A-A
For: DEVELOPMENT OF DNA PROBES AND IMMUNOLOGICAL REAGENTS SPECIFIC FOR CELL SURFACE-EXPRESSED MOLECULES AND TRANSFORMATION-ASSOCIATED GENES

DECISION ON PETITION

This decision is in response to the petition pursuant to 37 CFR 1.47(a) filed September 30, 2004.

The petition is hereby **GRANTED**.

The instant application indicates that it "is a continuation of U.S. Patent Application Ser. No. 10/716,985, filed November 19, 2003, which is a continuation of U.S. Patent Application Serial No. 08/875,553, filed on May 26, 1998, which is a 371 application of PCT/US96/00307, filed on January 11, 1996, which is a continuation-in-part of U.S. Patent Application Serial No. 08/371,377, filed on January 11, 1995 (now U.S. Patent No. 5,851,764), the contents of each of which are hereby incorporated by reference, each of which is incorporated by reference into the instant specification in its entirety."

It is noted that Rule 47 status was accorded App. No. 08-875,553. In accordance with 37 CFR 1.63(d), petitioners have submitted a copy of the executed declaration filed in the prior application. Petitioners have not provided a copy of a decision on petition according Rule 47 status to the prior application. However, a copy of the decision according Rule 47 status to the prior application has been placed in the file of the present application.

As Rule 1.47(a) status was granted in the prior application, this application is hereby accorded Rule 1.47(a) status.

As provided in Rule 1.47(c), since notice was provided after the grant of Rule 1.47(a) status in the prior application, the Office is dispensing with the notice provision in this continuation application.

This application is being returned to the Office Publications for processing into a patent.

Telephone inquiries regarding this matter should be directed to the undersigned at (571) 272-3205.

Alesia M. Brown
Petitions Attorney
Office of Petitions

UNITED STATES PATENT AND TRADEMARK OFFICE

Commissioner for Patents
United States Patent and Trademark Office
P.O. Box 1450
Alexandria, VA 22313-1450
www.uspto.gov

**BROOKS KUSHMAN P.C./LEAR CORPORATION**
**1000 TOWN CENTER**
**TWENTY-SECOND FLOOR**
**SOUTHFIELD, MI 48075-1238**

COPY MAILED

MAR 1 5 2006

OFFICE OF PETITIONS

In re Application of :
Thomas Chrostowski :
Application No. 10/955,127 : ON PETITION
Filed: September 30, 2004 :
Attorney Docket No. LEAR 05056 PUS :

This is a decision on the petition under 37 CFR 1.313(c)(3), filed March 10, 2006, which is being treated under 37 CFR 1.313(c)(2), to withdraw the above-identified application from issue after payment of the issue fee.

The petition is **GRANTED**.

The above-identified application is withdrawn from issue for consideration of a submission under 37 CFR 1.114 (request for continued examination). See 37 CFR 1.313(c)(2).

**Petitioner is advised that the issue fee paid on January 17, 2006 in the above-identified application cannot be refunded. If, however, the above-identified application is again allowed, petitioner may request that it be applied towards the issue fee required by the new Notice of Allowance.**[1]

Telephone inquiries should be directed to Wan Laymon at (571) 272-3220.

This matter is being referred to Technology Center AU 2837 for processing of the request for continued examination under 37 CFR 1.114.

Wan Laymon
Petitions Examiner
Office of Petitions

---

[1] The request to apply the issue fee to the new Notice may be satisfied by completing and returning the new Issue Fee Transmittal Form PTOL-85(b), which includes the following language thereon: "Commissioner for Patents is requested to apply the Issue Fee and Publication Fee (if any) or re-apply any previously paid issue fee to the application identified above." Petitioner is advised that, whether a fee is indicated as being due or not, the Issue Fee Transmittal Form **must** be completed and timely submitted to avoid abandonment. Note the language in bold text on the first page of the Notice of Allowance and Fee(s) Due (PTOL-85).

UNITED STATES PATENT AND TRADEMARK OFFICE

COMMISSIONER FOR PATENTS
UNITED STATES PATENT AND TRADEMARK OFFICE
P.O. BOX 1450
ALEXANDRIA, VA 22313-1450

www.uspto.gov

Date : March 15, 2006

TO : Director, Office of Patent Publication

FROM : Office of the Deputy Commissioner for Patent Examination Policy

SUBJECT : Withdrawal from Issue of

Applicant(s) : Thomas Chrostowski
Application No. : 10/955,127
Filed : September 30, 2004

COPY MAILED
MAR 1 5 2006
OFFICE OF PETITIONS

The above-identified application has been assigned Patent No. 7,019,485 and an issue date of March 28, 2006.

It is hereby directed that this application be withdrawn from issue at the request of the applicant. Do not refund the issue fee.

The following erratum should be published in the Official Gazette if the above-identified application is published in the OG of March 28, 2006:

**"All reference to Patent No. 7,019,485 to Thomas Chrostowski of Chesterfield, MI for SYSTEM AND METHOD FOR ESTIMATING MOTOR TEMPERATURE FOR MOTOR OVERUSE PROTECTION appearing in the Official Gazette of March 28, 2006 should be deleted since no patent was granted."**

Wan Laymon
Petitions Examiner
Office of Petitions

cc: Paul Harrison
Deneise Boyd
Mary Louise McAskill
Niomi Farmer
Mary E. Johnson (Cookie)
Duane Davis (CDS)
Tamara K. Greene

UNITED STATES PATENT AND TRADEMARK OFFICE

Commissioner for Patents
United States Patent and Trademark Office
P.O. Box 1450
Alexandria, VA 22313-1450
www.uspto.gov

COPY MAILED
JUN 21 2006
OFFICE OF PETITIONS

STEPHEN PATTON
P O Box 381454
Germantown, TN 38183

In re Application of
MARTIN
Application No. 10/955,140
Filed: September 30, 2004
Attorney Docket No. 17508

DECISION ON PETITION
TO WITHDRAW
FROM RECORD

This is a decision on the Request to Withdraw as attorney or agent of record under 37 C.F.R. § 1.36(b), filed January 17, 2006.

The request is **NOT APPROVED**.

A grantable request to withdraw as attorney/agent of record must be signed by every attorney/agent seeking to withdraw or contain a clear indication that one attorney is signing on behalf of another/others. A request to withdraw will not be approved unless at least 30 (thirty) days would remain between the date of approval and the later of the expiration date of a time to file a response or the expiration date of the maximum time period which can be extended under 37 C.F.R. § 1.136(a).

The Office cannot approve the request at this time since the reasons provided do not meet any of the conditions under the mandatory or permissive categories enumerated in 37 CFR 10.40. The reasons set forth in the request, "I no longer legally represent the assignee," do not meet any the conditions set forth in 37 CFR 10.40.

All future communications from the Office will continue to be directed to the below-listed address until otherwise notified by applicant.

Telephone inquiries concerning this decision should be directed to the undersigned at 571-272- 4787.

Denise Pothier
Petitions Examiner
Office of Petitions

cc: CNH AMERICA LLC
INTELLECTUAL PROPERTY LAW DEPARTMENT
PO BOX 1895, MS 641
NEW HOLLAND PA 17557

UNITED STATES PATENT AND TRADEMARK OFFICE

Commissioner for Patents
United States Patent and Trademark Office
P.O. Box 1450
Alexandria, VA 22313-1450
www.uspto.gov

**CHRISTIE, PARKER & HALE, LLP**
**PO BOX 7068**
**PASADENA CA 91109-7068**

COPY MAILED
NOV 17 2008

| | | |
|---|---|---|
| In re Application of | : | |
| Dong-Young Shin | : | |
| Application No. 10/955,171 | : | DECISION GRANTING PETITION |
| Filed: September 29, 2004 | : | UNDER 37 CFR 1.313(c)(2) |
| Attorney Docket No. 53162/P849 | : | |

This is a decision on the petition under 37 CFR 1.313(c)(2), filed November 14, 2008, to withdraw the above-identified application from issue after payment of the issue fee.

The petition is **GRANTED**.

The above-identified application is withdrawn from issue for consideration of a submission under 37 CFR 1.114 (request for continued examination). *See* 37 CFR 1.313(c)(2).

***Petitioner is advised that the issue fee paid on November 14, 2008 cannot be refunded. If, however, this application is again allowed, petitioner may request that it be applied towards the issue fee required by the new Notice of Allowance.***[1]

Telephone inquiries should be directed to the undersigned at (571) 272-3208.

This application is being referred to Technology Center AU 2629 for processing of the request for continued examination under 37 CFR 1.114 and for consideration of the concurrently filed IDS.

/Karen Creasy/
Karen Creasy
Petitions Examiner
Office of Petitions

---

[1] *The request to apply the issue fee to the new Notice may be satisfied by completing and returning the new Part B – Fee(s) Transmittal Form (along with any balance due at the time of submission). Petitioner is advised that the Issue Fee Transmittal Form must be completed and timely submitted to avoid abandonment of the application.*

UNITED STATES PATENT AND TRADEMARK OFFICE

Commissioner for Patents
United States Patent and Trademark Office
P.O. Box 1450
Alexandria, VA 22313-1450
www.uspto.gov

**MCKEE, VOORHEES & SEASE, P.L.C.**
**801 GRAND AVENUE**
**SUITE 3200**
**DES MOINES IA 50309-2721**

**COPY MAILED**

APR 2 2 2009

**OFFICE OF PETITIONS**

| | | |
|---|---|---|
| In re Application of | : | |
| William A. Skaife | : | |
| Application No. 10/955,186 | : | DECISION ON PETITION |
| Filed: September 30, 2004 | : | |
| Attorney Docket No. P05842US01 | : | |

This is a decision on the petition under the unintentional provisions of 37 CFR 1.137(b), filed October 20, 2008, to revive the above-identified application.

The petition is **GRANTED**.

The petition satisfies the conditions for revival pursuant to the provisions of 37 CFR 1.137(b) in that (1) the reply; (2) the petition fee; and (3) the required statement of unintentional delay have been received. Accordingly, the reply is accepted as having been unintentionally delayed.

Telephone inquiries concerning this decision should be directed to the undersigned at (571) 272-3208.

This application is being referred to Technology Center AU 3742 for appropriate action by the Examiner in the normal course of business.

Karen Creasy

Karen Creasy
Petitions Examiner
Office of Petitions

UNITED STATES PATENT AND TRADEMARK OFFICE

Commissioner for Patents
United States Patent and Trademark Office
P.O. Box 1450
Alexandria, VA 22313-1450
www.uspto.gov

**HELLER EHRMAN LLP**
**4350 LA JOLLA VILLAGE DRIVE, 7TH FLOOR**
**SAN DIEGO, CA 92122**

MAILED

APR 2 6 2010

OFFICE OF PETITIONS

| | | |
|---|---|---|
| In re Application of | : | |
| Nakamura et al. | : | DECISION ON PETITION |
| Application No. 10/955,192 | : | TO WITHDRAW |
| Filed: September 29, 2004 | : | FROM RECORD |
| Attorney Docket No. 39888-0001CP-1 | : | |

This is a decision on the request to withdraw as attorney of record under 37 C.F.R. § 1.36, filed February 25, 2010.

The request is **DISMISSED**.

A review of the file record indicates that Goodwin Procter LLP does not have power of attorney in this patent application. Accordingly, the request to withdraw under 37 C.F.R. § 1.36(b) is not applicable.

A review of USPTO records reveals that the Power of Attorney filed November 18, 2008 was erroneously accepted on December 15, 2008. The Power of Attorney by Assignee submitted November 18, 2008 did not include a proper Statement under 37 CFR 3.73(b) since it was unsigned and did not include all assignees. Since no proper Statement under 37 CFR § 3.73(b) was submitted the request was improper. Accordingly, there is no Power of Attorney in the above-identified application. Further, the Correspondence Address will revert back to the address designated in the Oath/Declaration filed June 30, 2005. Therefore, all future communications from the Office will be directed solely to the above current address of record until proper instructions have been received.

Further, a courtesy copy of this decision is being mailed to the address given on the petition; however, the Office will mail all future correspondence solely to the address of record.

A Notice of Appeal was filed on October 28, 2009 and currently requires a further response.

Telephone inquires concerning this decision should be directed to the undersigned at 571-272-7751.

Joan Olszewski
Petitions Examiner
Office of Petitions

cc: Goodwin Procter LLP
Attn: Patent Administrator
135 Commonwealth Drive
Menlo Park CA 94025-1105

UNITED STATES PATENT AND TRADEMARK OFFICE

Commissioner for Patents
United States Patent and Trademark Office
P.O. Box 1450
Alexandria, VA 22313-1450
www.uspto.gov

DILLON & YUDELL LLP
8911 NORTH CAPITAL OF TEXAS HWY
SUITE 2110
AUSTIN, TX 78759

**COPY MAILED**

APR 21 2009

**OFFICE OF PETITIONS**

In re Application of Ross et al. :
Application No. 10/955,202 :
Filing Date: September 30, 2004 :
Attorney Docket No. 40228-P006US :

Decision on Petition

This is a decision on the petition under 37 CFR 1.137(b), filed January 22, 2009, to revive the above-identified application.

The petition is **granted**.

The above-identified application became abandoned for failure to submit the issue fee and publication fee in a timely manner in reply to the Notice of Allowance mailed August 5, 2008, which set a statutory period for reply of three (3) months. The application became abandoned on November 6, 2008. A Notice of Abandonment was mailed on December 3, 2008.

The instant petition requests revival of the application.

A grantable petition under 37 CFR 1.137(b) must be accompanied by:

(1) the reply required to the outstanding Office action or notice, unless previously filed,
(2) the petition fee,
(3) a statement that the entire delay in filing the required reply from the due date for the reply until the filing of a grantable petition pursuant to 37 CFR 1.137(b) was unintentional, and
(4) a terminal disclaimer and fee if the application was filed on or before June 8, 1995 or if the application is a design application.

Petitioner has submitted a reply to the Notice of Allowance in the form of payment of the issue fee and publication fee. Petitioner has submitted the required petition fee of $810. Petitioner has stated the entire delay in filing the required reply from the due date for the reply until the filing of a grantable petition pursuant to 37 CFR 1.137(b) was unintentional.

Petitioner has met the requirements to revive the above-identified application pursuant to 37 CFR 1.137(b). Therefore, the petition is granted and the application is revived.

The petition is signed by Attorney Antony Ng. Attorney Ng was not an attorney of record at the time the application became abandoned. Therefore, if appears Attorney Ng may not have been in a position to have firsthand or direct knowledge of the facts and circumstances of the delay. Nevertheless, the statement by Attorney Ng that the entire delay was unintentional is being treated as having been made as the result of a reasonable inquiry into the facts and circumstances of such delay.[1] In the event that such an inquiry has not been made, petitioner must make such an inquiry. If such inquiry results in the discovery that a portion of the delay from the due date for the reply until the filing of a grantable petition pursuant to 37 CFR 1.137(b) was intentional, petitioner must notify the Office.

The Office of Data Management, Patent Publication Branch, will be informed of the instant decision and the application will be issued as a patent in due course.

Telephone inquiries regarding this communication should be directed to Petitions Attorney Steven Brantley at (571) 272-3203.

Charles Steven Brantley
Senior Petitions Attorney
Office of Petitions

[1] See Changes to Patent Practice and Procedure, 62 *Fed. Reg.* at 53160 and 53178; 1203 *Off. Gaz. Pat. Office* at 88 and 103 (responses to comments 64 and 109) (applicant obligated under 37 CFR 10.18 to inquire into the underlying facts and circumstances when providing the statement required by 37 CFR 1.137(b) to the Patent and Trademark Office).

UNITED STATES PATENT AND TRADEMARK OFFICE

UNITED STATES DEPARTMENT OF COMMERCE
United States Patent and Trademark Office
Address: COMMISSIONER FOR PATENTS
P.O. Box 1450
Alexandria, Virginia 22313-1450
www.uspto.gov

| APPLICATION NUMBER | FILING OR 371(C) DATE | FIRST NAMED APPLICANT | ATTY. DOCKET NO./TITLE |
|---|---|---|---|
| 10/955,202 | 09/30/2004 | Rens Ross | 40228-P006US |

**CONFIRMATION NO. 3560**

**POWER OF ATTORNEY NOTICE**

*OC000000035490756*

47744
WINSTEAD PC
WINSTEAD PC
P. O. BOX 50784
DALLAS, TX 75201

Date Mailed: 04/15/2009

## NOTICE REGARDING CHANGE OF POWER OF ATTORNEY

This is in response to the Power of Attorney filed 01/22/2009.

- The Power of Attorney to you in this application has been revoked by the applicant. Future correspondence will be mailed to the new address of record(37 CFR 1.33).

/scbrantley/

---

Office of Data Management, Application Assistance Unit (571) 272-4000, or (571) 272-4200, or 1-888-786-0101

UNITED STATES PATENT AND TRADEMARK OFFICE

UNITED STATES DEPARTMENT OF COMMERCE
United States Patent and Trademark Office
Address: COMMISSIONER FOR PATENTS
P.O. Box 1450
Alexandria, Virginia 22313-1450
www.uspto.gov

| APPLICATION NUMBER | FILING OR 371(C) DATE | FIRST NAMED APPLICANT | ATTY. DOCKET NO./TITLE |
|---|---|---|---|
| 10/955,202 | 09/30/2004 | Rens Ross | 40228-P006US |

**CONFIRMATION NO. 3560**

**POA ACCEPTANCE LETTER**

42640
DILLON & YUDELL LLP
8911 NORTH CAPITAL OF TEXAS HWY
SUITE 2110
AUSTIN, TX 78759

*OC000000035490769*

Date Mailed: 04/15/2009

## NOTICE OF ACCEPTANCE OF POWER OF ATTORNEY

This is in response to the Power of Attorney filed 01/22/2009.

The Power of Attorney in this application is accepted. Correspondence in this application will be mailed to the above address as provided by 37 CFR 1.33.

/scbrantley/

---

Office of Data Management, Application Assistance Unit (571) 272-4000, or (571) 272-4200, or 1-888-786-0101

UNITED STATES PATENT AND TRADEMARK OFFICE

UNITED STATES DEPARTMENT OF COMMERCE
United States Patent and Trademark Office
Address: COMMISSIONER FOR PATENTS
P.O. Box 1450
Alexandria, Virginia 22313-1450
www.uspto.gov

| APPLICATION NO. | FILING DATE | FIRST NAMED INVENTOR | ATTORNEY DOCKET NO. | CONFIRMATION NO. |
|---|---|---|---|---|
| 10/955,204 | 09/30/2004 | Louise Bailey | 57.0291CNT | 3554 |

27452 7590 03/03/2008
SCHLUMBERGER TECHNOLOGY CORPORATION
David Cate
IP DEPT., WELL STIMULATION
110 SCHLUMBERGER DRIVE, MD1
SUGAR LAND, TX 77478

| EXAMINER |
|---|
| TOSCANO, ALICIA |

| ART UNIT | PAPER NUMBER |
|---|---|
| 1796 | |

| NOTIFICATION DATE | DELIVERY MODE |
|---|---|
| 03/03/2008 | ELECTRONIC |

**Please find below and/or attached an Office communication concerning this application or proceeding.**

The time period for reply, if any, is set in the attached communication.

Notice of the Office communication was sent electronically on above-indicated "Notification Date" to the following e-mail address(es):

ssitzmann@sugar-land.oilfield.slb.com
pmohan@sugar-land.oilfield.slb.com

UNITED STATES PATENT AND TRADEMARK OFFICE

Commissioner for Patents
United States Patent and Trademark Office
P.O. Box 1450
Alexandria, VA 22313-1450
www.uspto.gov

wk

Mailed: 3-3-08

| | | |
|---|---|---|
| In re application of | : | |
| Bailey et al. | : | DECISION ON |
| Serial No. 10/955,204 | : | PETITION |
| Filed: September 30, 2004 | : | |
| For: Anti-Accretion Additives For Drilling Fluids | | |

This is a decision on the PETITION – Reply to Notice of Non-Compliant Amendment filed February 20, 2008.

On June 18, 2007, a Notice of Non-Compliant Amendment was mailed to Applicants. The Notice specified that the amendments to the claims did not include a complete listing of all claims and that each claim has not been provided with a proper status identifier.

Applicant responded to this notice by filing a new amendment on July 17, 2007. On February 6, 2008 a Notice of Failure to Acceptably Respond to Notice of Non-Compliant Amendment was mailed to the Applicant. Applicant failed to comply with the original notice of non-compliance sent out June 18, 2007 (*failure to provide a complete listing of all claims*).

The period for reply continues to run from the mailing date of the prior Notice of Non-Compliant Amendment. If the period for reply set forth in the prior Notice of Non-Compliant Amendment has expired, the application will become abandon.

The application is abandoned and as such applicant's response to the original non-compliant request filed with this petition cannot be considered.

**DECISION**

The petition is **DENIED.**

JMStone

Jacqueline M. Stone, Director
Technology Center 1700
Chemical and Materials Engineering

SCHLUMBERGER TECHNOLOGY CORPORATION
David Cate
IP DEPT., WELL STIMULATION
110 SCHLUMBERGER DRIVE, MD1
SUGAR LAND TX 77478

UNITED STATES PATENT AND TRADEMARK OFFICE

Commissioner for Patents
United States Patent and Trademark Office
P.O. Box 1450
Alexandria, VA 22313-1450
www.uspto.gov

**SCHLUMBERGER TECHNOLOGY CORPORATION**
**DAVID CATE**
**IP DEPT., WELL STIMULATION**
**110 SCHLUMBERGER DRIVE, MD1**
**SUGAR LAND TX 77478**

COPY MAILED
SEP 24 2008

| | | |
|---|---|---|
| In re Application of | : | |
| Louise BAILEY, et al | : | |
| Application No. 10/955,204 | : | DECISION ON PETITION |
| Filed: September 30, 2004 | : | |
| Docket No. 57.0291CNT | : | |

This is a decision on the petition under the unintentional provisions of 37 CFR 1.137(b), filed March 10, 2008, to revive the above-identified application.

The petition is **GRANTED**.

The application became abandoned for failure to reply in a timely manner to the non-final Office action mailed, February 8, 2007, which set a shortened statutory period for reply of three (3) months. No extensions of time under the provisions of 37 CFR 1.136(a) were obtained. Accordingly, the application became abandoned on May 9, 2007.

The petition satisfies the requirements of 37 CFR 1.137(b) in that petitioner has supplied (1) the reply in the form of an amendment, (2) the petition fee of $1540; and (3) the required statement of unintentional delay.

There is no indication that the person signing the petition was ever given a power of attorney to prosecute the application. If the person signing the petition desires to receive future correspondence regarding this application, the appropriate power of attorney document must be submitted.

Telephone inquiries concerning this decision should be directed to Diane Goodwyn at (571) 272-6735.

This application is being referred to Technology Center AU 1796 for appropriate action by the Examiner in the normal course of business on the reply received March 10, 2008.

Thurman Page
Petitions Examiner
Office of Petitions

# RAM Fee History Query

Revenue Accounting and Management

Name/Number: 10955204 Total Records Found: 4

Start Date: Any Date End Date: Any Date

| Accounting Date | Sequence Num. | Fee Type | Fee Code | Fee Amount | Mailroom Date | Payment Method |
|---|---|---|---|---|---|---|
| 03/11/2008 | 00002772 | 4 | 1453 | $1,540.00 | 03/10/2008 | DA 041579 |
| 06/08/2007 | 00010451 | 4 | 1814 | $130.00 | 06/08/2007 | DA 041579 |
| 06/08/2007 | 00010452 | 4 | 1251 | $120.00 | 06/08/2007 | DA 041579 |
| 10/05/2004 | 00000045 | 1 | 1001 | $770.00 | 09/30/2004 | DA 190615 |

PTO/SB/64 (04-07)
Approved for use through 09/30/2007. OMB 0651-0031
U.S. Patent and Trademark Office; U.S. DEPARTMENT OF COMMERCE
Under the Paperwork Reduction Act of 1995, no persons are required to respond to a collection of information unless it displays a valid OMB control number.

# PETITION FOR REVIVAL OF AN APPLICATION FOR PATENT ABANDONED UNINTENTIONALLY UNDER 37 CFR 1.137(b)

Docket Number (Optional) 57.0291CNT

First named inventor: Louise Bailey

Application No.: 10/955204

Art Unit: 1796

Filed: September 30, 2004

Examiner: Alicia Toscano

Title: Anti-Accretion Additives for Drilling Fluids

Attention: Office of Petitions
**Mail Stop Petition**
Commissioner for Patents
P.O. Box 1450
Alexandria, VA 22313-1450
FAX (571) 273-8300

NOTE: If information or assistance is needed in completing this form, please contact Petitions Information at (571) 272-3282.

The above-identified application became abandoned for failure to file a timely and proper reply to a notice or action by the United States Patent and Trademark Office. The date of abandonment is the day after the expiration date of the period set for reply in the office notice or action plus an extensions of time actually obtained.

APPLICANT HEREBY PETITIONS FOR REVIVAL OF THIS APPLICATION

NOTE: A grantable petition requires the following items:
(1) Petition fee;
(2) Reply and/or issue fee;
(3) Terminal disclaimer with disclaimer fee - required for all utility and plant applications filed before June 8, 1995; and for all design applications; and
(4) Statement that the entire delay was unintentional.

1. Petition fee

☐ Small entity-fee $ _____ (37 CFR 1.17(m)). Applicant claims small entity status. See 37 CFR 1.27.

☑ Other than small entity – fee $ 1500.00 (37 CFR 1.17(m))

2. Reply and/or fee

A. The reply and/or fee to the above-noted Office action in the form of Response to Non-Compliant Amendment (identify type of reply):

☐ has been filed previously on _____.
☑ is enclosed herewith.

B. The issue fee and publication fee (if applicable) of $ _____.

☐ has been paid previously on _____.
☐ is enclosed herewith.



This collection of information is required by 37 CFR 1.137(b). The information is required to obtain or retain a benefit by the public which is to file (and by the USPTO to process) an application. Confidentiality is governed by 35 U.S.C. 122 and 37 CFR 1.11 and 1.14. This collection is estimated to take 1.0 hour to complete, including gathering, preparing, and submitting the completed application form to the USPTO. Time will vary depending upon the individual case. Any comments on the amount of time you require to complete this form and/or suggestions for reducing this burden, should be sent to the Chief Information Officer, U.S. Patent and Trademark Office, U.S. Department of Commerce, P.O. Box 1450, Alexandria, VA 22313-1450. DO NOT SEND FEES OR COMPLETED FORMS TO THIS ADDRESS. **SEND TO: Mail Stop Petition, Commissioner for Patents, P.O. Box 1450, Alexandria, VA 22313-1450.**

*If you need assistance in completing the form, call 1-800-PTO-9199 and select option 2.*

Under the Paperwork Reduction Act of 1995, no persons are required to respond to a collection of information unless it displays a valid OMB control number.

3. Terminal disclaimer with disclaimer fee

☑ Since this utility/plant application was filed on or after June 8, 1995, no terminal disclaimer is required.

☐ A terminal disclaimer (and disclaimer fee (37 CFR 1.20(d)) of $ _____ for a small entity or $ _____ for other than a small entity) disclaiming the required period of time is enclosed herewith (see PTO/SB/63).

4. STATEMENT: The entire delay in filing the required reply from the due date for the required reply until the filing of a grantable petition under 37 CFR 1.137(b) was unintentional. [NOTE: The United States Patent and Trademark Office may require additional information if there is a question as to whether either the abandonment or the delay in filing a petition under 37 CFR 1.137(b) was unintentional (MPEP 711.03(c), subsections (III)(C) and (D)).]

**WARNING:**

Petitioner/applicant is cautioned to avoid submitting personal information in documents filed in a patent application that may contribute to identity theft. Personal information such as social security numbers, bank account numbers, or credit card numbers (other than a check or credit card authorization form PTO-2038 submitted for payment purposes) is never required by the USPTO to support a petition or an application. If this type of personal information is included in documents submitted to the USPTO, petitioners/applicants should consider redacting such personal information from the documents before submitting them to the USPTO. Petitioner/applicant is advised that the record of a patent application is available to the public after publication of the application (unless a non-publication request in compliance with 37 CFR 1.213(a) is made in the application) or issuance of a patent. Furthermore, the record from an abandoned application may also be available to the public if the application is referenced in a published application or an issued patent (see 37 CFR 1.14). Checks and credit card authorization forms PTO-2038 submitted for payment purposes are not retained in the application file and therefore are not publicly available.

| | |
|---|---|
| Signature | March 10, 2008<br>Date |
| David Cate<br>Typed or printed name | 49091<br>Registration Number, if applicable |
| 110 Schlumberger Drive, MD-1, Sugar Land, TX 77478<br>Address | 281-285-8606<br>Telephone Number |
| Address | |

Enclosures:
- ☑ Fee Payment
- ☑ Reply
- ☐ Terminal Disclaimer Form
- ☑ Additional sheets containing statements establishing unintentional delay
- ☐ Other: _____

CERTIFICATE OF MAILING OR TRANSMISSION [37 CFR 1.8(a)]

I hereby certify that this correspondence is being:

☐ Deposited with the United States Postal Service on the date shown below with sufficient postage as first class mail in an envelope addressed to: Mail Stop Petition, Commissioner for Patents, P. O. Box 1450, Alexandria, VA 22313-1450.

☐ Transmitted by facsimile on the date shown below to the United States Patent and Trademark Office at (571) 273-8300.

| | |
|---|---|
| Date | Signature |
| | Typed or printed name of person signing certificate |

| | |
|---|---|
| Appl. No. | : 10/955204 |
| Applicant | : Bailey |
| Filed | : September 30, 2004 |
| TC/A.U. | : 1796 |
| Examiner | : Alicia Toscano |
| Docket No. | : 57.0291CNT |
| Customer No. | : 27452 |
| Confirmation No. | :3554 |

Commissioner for Patents
P.O. Box 1450
Alexandria VA 22313-1450

**PETITION TO REVIVE UNINTENTIONALLY ABANDONED APPLICATION UNDER 37 C.F.R. 1.137(b)**

Sir:

Applicants hereby petition the Commissioner under 37 C.F.R. §1.137 to revive application number 10/955204, originally filed on September 30, 2004, which became abandoned on or after December 18, 2008. The Commissioner is authorized to charge the required petition fee of $1500 to Deposit Account 04-1579 (57.0291CNT). Should this amount be incorrect, or should other fees apply, the Commissioner is also authorized to charge any additional required fee, or credit any excess fee paid, to Deposit Account 04-1579 (57.0291CNT).

It is the statement of the undersigned Attorney for Applicants that the entire delay in filing the required reply from the due date for the reply until the filing of a grantable petition pursuant to 37 C.F.R.1.137(b) was unintentional. On June 18, 2008, a Notice of Non-Compliant Amendment was mailed to the applicant. Applicants did a response to said notice on July 17, 2007 before the one month deadline. However, the Response was not deemed to be adequate because the Applicants failed to provide a complete listing of all claims, and Applicants inadvertently allowed the six month period to expire.

As required, Applicants have attached the required Response with a Complete list of Claims. Applicants have also authorized the Examiner to charge the required petition fee of $1500 and any other fees to Applicant's Deposit Account.

Respectfully submitted,

David Cate
Attorney for Applicant
Reg. No. 49091

Date: March 10, 2008

Schlumberger Technology Corporation
110 Schlumberger Drive, MD-1
Sugar Land, Texas 77478
Ph: (281) 285-8606
Fax: (281) 285-8569

Day : Monday
Date: 9/15/2008

# PALM INTRANET

Time: 12:01:09

**Customer's Attorney/Agent Search Result**

Customer# 27452 Customer's Applications
SCHLUMBERGER TECHNOLOGY CORPORATION
DAVID CATE
IP DEPT., WELL STIMULATION
110 SCHLUMBERGER DRIVE, MD1
SUGAR LAND, TX 77478

| | | Attorney/Agent | |
|---|---|---|---|
| MICHAEL | Attorney/Agent Applications | | 555 INDUSTRIAL BOULEVARD SUGAR LAND, TX 77478 |
| MITCHELL, THOMAS | 47800 Agent's Applications | (281)545-8543 | 1715 HATTERAS CT. SUGAR LAND, TX 77479 |
| CATE, DAVID II | 49091 Attorney's Applications | (281)285-8606 | SCHLUMBERGER TECHNOLOGY CORPORATION 555 INDUSTRIAL BOULEVARD SUGAR LAND, TX 77478 |
| GALLOWAY, BRYAN | 50312 Attorney's Applications | (281)285-5668 | SCHLUMBERGER 14910 AIRLINE ROAD ROSHARON, TX 77583 |
| WARFFORD, RODNEY | 51304 Attorney's Applications | (281)285-7912 | SCHLUMBERGER TECHNOLOGY CORPORATION 555 INDUSTRIAL BOULEVARD SUGAR LAND, TX 77478 |

Please note: Signed Petition, however no POA filed.

Search Completed: No Records to Display.

**Search Another: Attorney/Agent/Customer**

**Registration#** Search **Customer#** Search

**Attorney's/Agent's Last Name** **First Name**

| | | | |
|---|---|---|---|
| WANG, WILLIAM | Attorney's | | 409 BECKER LANE |

UNITED STATES PATENT AND TRADEMARK OFFICE

Commissioner for Patents
United States Patent and Trademark Office
P.O. Box 1450
Alexandria, VA 22313-1450
www.uspto.gov

**HOLLAND & HART LLP**
**60 E. SOUTH TEMPLE, SUITE 2000**
**P.O. BOX 11583**
**SALT LAKE CITY UT 84110**

COPY MAILED

SEP 0 8 2008

OFFICE OF PETITIONS

In re Application of
**MAHARAJ,** Neal
Application No. 10/955,206
Filed: September 30, 2004
Attorney Docket No. **50722.0001**

DECISION ON PETITION
TO WITHDRAW
FROM RECORD

This is a decision on the Request to Withdraw as attorney or agent of record under 37 C.F.R. § 1.36(b), filed July 23, 2008.

The request is **APPROVED**.

A grantable request to withdraw as attorney/agent of record must be signed by every attorney/agent seeking to withdraw or contain a clear indication that one attorney is signing on behalf of another/others. The Office requires the practitioner(s) requesting withdrawal to certify that he, she, or they have: (1) given reasonable notice to the client, prior to the expiration of the response period, that the practitioner(s) intends to withdraw from employment; (2) delivered to the client or a duly authorized representative of the client all papers and property (including funds) to which the client is entitled; and (3) notified the client of any responses that may be due and the time frame within which the client must respond, pursuant 37 CFR 10.40(c).

The request was signed by L. Grant Foster on behalf of all attorneys of record who are associated with customer No. 57600. All attorneys/agents associated with the Customer Number 57600 have been withdrawn. Applicant is reminded that there is no attorney of record at this time.

The request to change the correspondence address of record is not acceptable as the requested correspondence address is not that of: (1) the first named signing inventor; or (2) an intervening assignee of the entire interest under 37 C.F.R 3.71. All future communications from the Office will be directed to the first named signing inventor at the first copied address below until otherwise properly notified by the applicant.

There is an outstanding Office action mailed March 25, 2008 that requires a reply from the applicant.

Telephone inquiries concerning this decision should be directed to Tredelle Jackson at 571-272-2783.

Tredelle D. Jackson
Paralegal Specialist
Office of Petitions

cc: **NEAL MAHARAJ**
**85 EAST CONN AVE.**
**LAS VEGAS NV 89123**

cc: **MAHALAKHMI INVESTMENTS, LLC**
**9775 SOUTH MARYLAND PARKWAY**
**SUITE F-50**
**LAS VEGAS 89123**

UNITED STATES PATENT AND TRADEMARK OFFICE

Commissioner for Patents
United States Patent and Trademark Office
P.O. Box 1450
Alexandria, VA 22313-1450
www.uspto.gov

COPY MAILED

DEC 07 2007

OFFICE OF PETITIONS

**ALLEN LEROY LIMBERG, ESQ.**
**1053 KENSINGTON STREET**
**PORT CHARLOTTE FL 33952**

| | | |
|---|---|---|
| In re Application of | : | |
| Allen LeRoy | : | |
| Application No. 10/955,212 | : | DECISION ON PETITION |
| Filed: September 30, 2006 | : | TO MAKE SPECIAL UNDER |
| Attorney Docket No. ALRL-43 | : | 37 CFR 1.102(c)(1) |
| | : | |

This is a decision on the petition under 37 CFR 1.102(c)(1), filed April 26, 2007, to make the above-identified application special based on applicant's age as set forth in M.P.E.P. § 708.02, Section IV.

The petition is **GRANTED**.

A grantable petition to make an application special under 37 CFR 1.102(c)(1) and MPEP § 708.02, Section IV: Applicant's Age must be accompanied by evidence showing that at least one of the applicants is 65 years of age, or more, such as a birth certificate or a statement by applicant. No fee is required

The instant petition includes a statement from the applicant declaring that he is 65 years of age or older. Accordingly, the above-identified application has been accorded "special" status.

Telephone inquiries concerning this decision should be directed to Terri Williams at 571-272-2991.

All other inquiries concerning either the examination or status of the application should be directed to the Technology Center.

The application is being forwarded to the Technology Center Art Unit 2611 for action on the merits commensurate with this decision.

T. Williams

Terri Williams
Petitions Examiner
Office of Petitions

UNITED STATES PATENT AND TRADEMARK OFFICE

COMMISSIONER FOR PATENTS
UNITED STATES PATENT AND TRADEMARK OFFICE
P.O. BOX 1450
ALEXANDRIA, VA 22313-1450
www.uspto.gov

LAWSON & PERSSON, P.C.
SUITE 103
67 WATER STREET
LACONIA, NH 03246

**COPY MAILED**

APR 20 2007

**OFFICE OF PETITIONS**

| | | |
|---|---|---|
| In re Application of<br>Claire Houghton, et al..<br>Application No. 10/955,228<br>Filed: September 30, 2004<br>Attorney Docket No. 1625-001 | :<br>:<br>:<br>:<br>: | ON PETITION |

This is a decision on the petition under 37 CFR 1.137(b) to revive the above-identified application, filed January 3, 2007.

The petition is **GRANTED**.

The application became abandoned for failure to pay the issue fee on or before August 9, 2005. A Notice of Abandonment was mailed on September 13, 2006. In response, on January 3, 2007, the present petition was filed.

The petition satisfies the requirements of 37 CFR 1.137(b) in that petitioner has supplied (1) the reply in the form of the $700 issue fee and the $300 publication fee; (2) the petition fee of $750; and (3) the required statement of unintentional delay.

The application is being referred to the Office of Publications to be processed into a patent.

Telephone inquires related to this decision should be directed to the undersigned at (571) 272-3204. Telephone inquiries related to processing at Publishing Division should be directed to (571) 272-4200.

Sherry D. Brinkley
Petitions Examiner
Office of Petitions

UNITED STATES PATENT AND TRADEMARK OFFICE

Commissioner for Patents
United States Patent and Trademark Office
P.O. Box 1450
Alexandria, VA 22313-1450
www.uspto.gov

**SCHWEGMAN, LUNDBERG, WOESSNER & KLUTH, P.A.**
**P.O. BOX 2938**
**MINNEAPOLIS MN 55402**

**COPY MAILED**

MAY 2 5 2007

**OFFICE OF PETITIONS**

In re Application of

**LOW,** Ai Ling
Application No. 10/955,233
Filed: September 30, 2004
Attorney Docket No. **884.C73US1**

DECISION ON PETITION
TO WITHDRAW
FROM RECORD

This is a decision on the Request to Withdraw as attorney or agent of record under 37 C.F.R. § 1.36(b), filed January 29, 2007.

The request is **APPROVED**.

A grantable request to withdraw as attorney/agent of record must be signed by every attorney/agent seeking to withdraw or contain a clear indication that one attorney is signing on behalf of another/others. A request to withdraw will not be approved unless at least 30 (thirty) days would remain between the date of approval and the later of the expiration date of a time to file a response or the expiration date of the maximum time period which can be extended under 37 C.F.R. § 1.136(a).

The request was signed by Richard Billion on behalf of all attorneys of record who are associated with customer No. 45457. All attorneys/agents associated with the Customer Number 45457 have been withdrawn. Applicant is reminded that there is no attorney of record at this time.

The request to change the correspondence of record is not acceptable as the requested correspondence address is not that of: (1) the first named signing inventor; or (2) an intervening assignee of the entire interest under 37 C.F.R 3.71. All future communications from the Office will be directed to the first named signing inventor or the assignee of the entire interest at the first copied address below until otherwise properly notified by the applicant.

Telephone inquiries concerning this decision should be directed to Tredelle Jackson at 571-272-2783.

Frances Hicks
Petitions Examiner
Office of Petitions

cc: **AI LING LOW**
**MALAYSIA**
**2, JALAN PENGKALAN**
**SUNGAI PETANI, KEDAH 08000**

cc: **KENNETH A. NELSON**
**INTEL CORPORATION**
**4500 S. DOBSON ROAD**
**MS OC2-157**
**CHANDLER, AZ 85248**

UNITED STATES PATENT AND TRADEMARK OFFICE

Commissioner for Patents
United States Patent and Trademark Office
P.O. Box 1450
Alexandria, VA 22313-1450
www.uspto.gov

**ZILKA-KOTAB, PC**
**P.O. BOX 721120**
**SAN JOSE, CA 95172-1120**

**COPY MAILED**

DEC 2 2 2008

**OFFICE OF PETITIONS**

In re Application of
**LYNCH, William C. et al.**
Application No. 10/955,240
Filed: September 29, 2004
Attorney Docket No. **DROPP007**

DECISION ON PETITION
TO WITHDRAW
FROM RECORD

This is a decision on the Request to Withdraw as attorney or agent of record under 37 C.F.R. § 1.36(b), filed October 23, 2008.

The request is **NOT APPROVED** because it is moot.

A review of the file record indicates that the power of attorney to Zilka-Kotab, PC has been revoked by the assignee of the patent application on December 03, 2008. Accordingly, the request to withdraw under 37 C.F.R. § 1.36(b) is moot.

All future communications from the Office will continue to be directed to the below-listed address until otherwise notified by applicant.

Telephone inquires concerning this decision should be directed to Michelle R. Eason at 571-272-4231.

Michelle R. Eason
Paralegal Specialist
Office of Petitions

cc: **SQUIRE, SANDERS & DEMPSEY L.L.P**
**PATENT DEPARTMENT**
**ONE MARITIME PLAZA, SUITE 300**
**SAN FRANCISCO CA 94111-3492**

UNITED STATES PATENT AND TRADEMARK OFFICE

UNITED STATES DEPARTMENT OF COMMERCE
United States Patent and Trademark Office
Address: COMMISSIONER FOR PATENTS
P.O. Box 1450
Alexandria, Virginia 22313-1450
www.uspto.gov

LEVINE BAGADE HAN LLP
2400 GENG ROAD, SUITE 120
PALO ALTO, CA 94303

Mail Date: 04/28/2010

| | | |
|---|---|---|
| **Applicant** | : Vahid Saadat | : DECISION ON REQUEST FOR |
| **Patent Number** | : 7621925 | : RECALCULATION of PATENT |
| **Issue Date** | : 11/24/2009 | : TERM ADJUSTMENT IN VIEW |
| **Application No** | : 10/955,243 | : OF WYETH AND NOTICE OF INTENT TO |
| **Filed** | : 09/30/2004 | : ISSUE CERTIFICATE OF CORRECTION |
| | | : |

The Request for Recalculation is **GRANTED** to the extent indicated.

The patent term adjustment has been determined to be **179** days. The USPTO will *sua sponte* issue a certificate of correction reflecting the amount of PTA days determined by the recalculation.

Prior to the issuance of the certificate of correction, the USPTO will afford patentee an opportunity to be heard and request reconsideration. Accordingly, patentee has **one month or thirty (30) days**, whichever is longer, to file a request for reconsideration of this patent term adjustment calculation. See 35 U.S.C. 154(b)(3)(B)(ii) and 37 CFR 1.322(a)(4). No extensions of time will be granted under 37 CFR 1.136.

Patentee should use document code PET.OP if electronically filing a request for reconsideration of this patent term adjustment calculation. The patentee must also include the information required by 37 CFR 1.705(b)(2) and the fee required by 37 CFR 1.18(e). If patentee does not file a timely request for reconsideration of this patent term adjustment calculation including the information required by 37 CFR 1.705(b)(2) and the fee required by 37 CFR 1.18(e), the USPTO will issue a certificate of correction reflecting the PTA determination noted above.

Patentee should be aware that in order to preserve the right to review in the United States District Court for the District of Columbia of the USPTO patent term adjustment determination, patentee must ensure that he or she also take the steps required under 35 U.S.C. 154(b)(4)(A) in a timely manner. Nothing in the request for recalculation should be construed as providing an alternative time frame for commencing a civil action under 35 U.S.C. 154(b)(4)(A).

Any questions concerning this decision should be directed to the Office of Patent Legal Administration at 571-272-7702.

UNITED STATES PATENT AND TRADEMARK OFFICE

UNITED STATES DEPARTMENT OF COMMERCE
United States Patent and Trademark Office
Address: COMMISSIONER FOR PATENTS
P.O. Box 1450
Alexandria, Virginia 22313-1450
www.uspto.gov

WALL & TONG, LLP/
ALCATEL-LUCENT USA INC.
595 SHREWSBURY AVENUE
SHREWSBURY, NJ 07702

Mail Date: 04/21/2010

| | | |
|---|---|---|
| **Applicant** | : Yigal Bejerano | : DECISION ON REQUEST FOR |
| **Patent Number** | : 7606142 | : RECALCULATION of PATENT |
| **Issue Date** | : 10/20/2009 | : TERM ADJUSTMENT IN VIEW |
| **Appliction No** | : 10/955,265 | : OF WYETH AND NOTICE OF INTENT TO |
| **Filed** | : 09/30/2004 | : ISSUE CERTIFICATE OF CORRECTION |
| | | : |

The Request for Recalculation is **GRANTED** to the extent indicated.

The patent term adjustment has been determined to be **1138** days. The USPTO will *sua sponte* issue a certificate of correction reflecting the amount of PTA days determined by the recalculation.

Prior to the issuance of the certificate of correction, the USPTO will afford patentee an opportunity to be heard and request reconsideration. Accordingly, patentee has **one month or thirty (30) days**, whichever is longer, to file a request for reconsideration of this patent term adjustment calculation. See 35 U.S.C. 154(b)(3)(B)(ii) and 37 CFR 1.322(a)(4). No extensions of time will be granted under 37 CFR 1.136.

Patentee should use document code PET.OP if electronically filing a request for reconsideration of this patent term adjustment calculation. The patentee must also include the information required by 37 CFR 1.705(b)(2) and the fee required by 37 CFR 1.18(e). If patentee does not file a timely request for reconsideration of this patent term adjustment calculation including the information required by 37 CFR 1.705(b)(2) and the fee required by 37 CFR 1.18(e), the USPTO will issue a certificate of correction reflecting the PTA determination noted above.

Patentee should be aware that in order to preserve the right to review in the United States District Court for the District of Columbia of the USPTO patent term adjustment determination, patentee must ensure that he or she also take the steps required under 35 U.S.C. 154(b)(4)(A) in a timely manner. Nothing in the request for recalculation should be construed as providing an alternative time frame for commencing a civil action under 35 U.S.C. 154(b)(4)(A).

Any questions concerning this decision should be directed to the Office of Patent Legal Administration at 571-272-7702.

UNITED STATES PATENT AND TRADEMARK OFFICE

UNITED STATES DEPARTMENT OF COMMERCE
United States Patent and Trademark Office
Address: COMMISSIONER FOR PATENTS
P.O. Box 1450
Alexandria, Virginia 22313-1450
www.uspto.gov

WALL & TONG, LLP/
ALCATEL-LUCENT USA INC.
595 SHREWSBURY AVENUE
SHREWSBURY, NJ 07702

Mail Date: 05/18/2010

**Applicant** : Yigal Bejerano
**Patent Number** : 7606142
**Issue Date** : 10/20/2009
**Application No** : 10/955,265
**Filed** : 09/30/2004

: NOTICE CONCERNING IMPROPER
: CALCULATION OF PATENT TERM
: ADJUSTMENT BASED UPON USPTO
: IMPROPERLY MEASURING REDUCTION
: PERIOD UNDER 37 CFR 1.704(c)(10).

The United States Patent and Trademark Office (USPTO) discovered that in processing the recent recalculation decisions mailed in response to patentee's filed Request for Recalculation of Patent Term Adjustment in view of Wyeth, the USPTO improperly measured the reduction period for reductions under 37 CFR 1.704(c)(10). Pursuant to 37 CFR 1.704(c)(10), patentee's reduction begins on the date of filing the amendment under 37 CFR 1.312 ("1.312 amendment") or other related paper and ends on the date that the Office mails a response to the filing of the 1.312 amendment or other paper. It has been discovered that during the recalculation, the calculation failed to the limit the reduction to the mail date of the response to the 1.312 amendment or other paper. Accordingly, patentee's reductions were greater than warranted.

This notice **VACATES** the previous GRANTED request for recalculation and provides patentee with a revised GRANTED recalculation.

The patent term adjustment has been determined to be **1207** days. The USPTO will *sua sponte* issue a certificate of correction reflecting the amount of patent term adjustment (PTA) days determined by the recalculation.

Prior to the issuance of the certificate of correction, the USPTO will afford patentee an opportunity to be heard and request reconsideration. Accordingly, patentee has **one month or thirty (30) days** from the mail date of this notice, whichever is longer, to file a request for reconsideration of this PTA calculation. See 35 U.S.C. § 154(b)(3)(B)(ii) and 37 CFR 1.322(a)(4).

Patentee should use document code PET.OP if electronically filing a request for reconsideration of this PTA calculation. The patentee must also include the information required by 37 CFR 1.705(b)(2), and the fee required by 37 CFR 1.18(e). If patentee does not file a timely request for reconsideration of this PTA calculation, including the information required by 37 CFR 1.705(b)(2) and the fee required by 37 CFR 1.18(e), the USPTO will issue a certificate of correction reflecting the PTA determination noted above.

Patentee should be aware that in order to preserve the right of review of the USPTO's PTA determination in the United States District Court for the District of Columbia, patentee must ensure that the steps required under 35 U.S.C. § 154 (b)(4) are taken in a timely manner. Nothing in the request for recalculation should be construed as providing an alternative time frame for commencing a civil action under 35 U.S.C. § 154(b)(4).

UNITED STATES PATENT AND TRADEMARK OFFICE

Commissioner for Patents
United States Patent and Trademark Office
P.O. Box 1450
Alexandria, VA 22313-1450
www.uspto.gov

**FINNEGAN, HENDERSON, FARABOW, GARRETT & DUNNER LLP**
**901 NEW YORK AVENUE, NW**
**WASHINGTON DC 20001-4413**

COPY MAILED

NOV 27 2009

OFFICE OF PETITIONS

| | | |
|---|---|---|
| In re Application of | : | |
| Michael Schweitzer et al. | : | |
| Application No. 10/955,266 | : | RESPONSE TO PETITION |
| Filed: November 30. 2004 | : | |
| Attorney Docket No. 08020.0006-00 | : | |

This is a response to the petition under 37 CFR 1.59(b), filed August, 10, 2009, to expunge information from the above identified application.

The petition is dismissed.

Petitioner requests that the Amendment After Final, Claims and Applicant Arguments/Remarks Made in an Amendment, filed August 6, 2009 be expunged from the application file.

However, the petition is premature since prosecution of the application has not been closed by way of the allowance of the application, the mailing of an Ex parte Quayle action, or the abandonment of the application. See MPEP 724.06. Accordingly, it is not appropriate to make a final determination of whether or not the material requested to be expunged is "material," with "materiality" being defined as any information which the examiner considers as being important to a determination of patentability of the claims. Thus, the decision on the petition to expunge must be dismissed at this time.

During prosecution on the merits, the examiner will determine whether or not the identified document is considered to be "material." If the information is not considered by the examiner to be material and the conditions related to the expungement of unintentionally submitted information, discussed as A-F in MPEP 724.05 II, are satisfied, the information will be removed from the official file.

After the mailing of a Notice of Allowance, an Ex parte Quayle action or a Notice of Abandonment, the petition to expunge may be renewed by applicant(s) or applicant(s)' representative. No further fee is required for such a second submission of a petition under 37 CFR 1.59 to expunge information. **In addition, the requester is cautioned to renew the petition under 37 CFR 1.59 for reconsideration by the Office prior to the point at which the present file, or file claiming priority to the present file, is forwarded for issuance of the**

**patent. This is to be done no later than immediately after the examiner has issued a Notice of Allowance, an Ex parte Quayle action or a Notice of Abandonment. A failure to timely renew the petition to expunge prior to the point at which the file is forwarded for issuance will result in the material being retained in the patented file and thus becoming open to the public.**

Telephone inquiries concerning this communication should be directed to Carl Friedman at (571) 272-6842.

David Bucci
Petitions Examiner
Office of Petitions

UNITED STATES PATENT AND TRADEMARK OFFICE

Commissioner for Patents
United States Patent and Trademark Office
P.O. Box 1450
Alexandria, VA 22313-1450
www.uspto.gov

PATENT DEPARTMENT - 53051
KILPATRICK STOCKTON LLP
1001 WEST FOURTH STREET
WINSTON-SALEM, NC 27101

**COPY MAILED**

JUL 27 2007

**OFFICE OF PETITIONS**

In re Application of
Gilad Israel Elbaz, et al.
Application No. 10/955,281
Filed: September 30, 2004
Attorney Docket No. 53051/302347

DECISION ON PETITION
TO WITHDRAW
FROM RECORD

This is a decision on the Request to Withdraw as attorney or agent of record under 37 C.F.R. § 1.36(b) filed February 20, 2007.

The request is **DISMISSED** as moot.

A review of the file record indicates that the power of attorney to Kilpatrick Stockton, LLP has been revoked by the assignee of the patent application on March 5, 2007. Accordingly, the request to withdraw under 37 C.F.R. § 1.36(b) is moot.

All future communications from the Office will continue to be directed to the below-listed address until otherwise notified by applicant.

There is an outstanding Office action mailed July 23, 2007 that requires a reply by the applicant.

Telephone inquires concerning this decision should be directed to undersigned at 571-272-1642.

April M. Wise
Petitions Examiner
Office of Petitions

cc: JOHN A. DRAGSETH, ESQ.
FISH & RICHARDSON, PC
60 SOUTH SIXTH STREET
SUITE 3300
MINNEAPOLIS, MN 55402

UNITED STATES PATENT AND TRADEMARK OFFICE

UNITED STATES DEPARTMENT OF COMMERCE
United States Patent and Trademark Office
Address: COMMISSIONER FOR PATENTS
P.O. Box 1450
Alexandria, Virginia 22313-1450
www.uspto.gov

| APPLICATION NUMBER | FILING OR 371 (c) DATE | FIRST NAMED APPLICANT | ATTY. DOCKET NO./TITLE |
|---|---|---|---|
| 10/955,281 | 09/30/2004 | Gilad Israel Elbaz | 53051/302347 |

**CONFIRMATION NO. 3998**

*OC000000024997800*

40400
PATENT DEPARTMENT - 53051
KILPATRICK STOCKTON LLP
1001 WEST FOURTH STREET
WINSTON-SALEM, NC 27101

Date Mailed: 07/24/2007

## NOTICE REGARDING CHANGE OF POWER OF ATTORNEY

This is in response to the Power of Attorney filed 03/05/2007.

- The Power of Attorney to you in this application has been revoked by the assignee who has intervened as provided by 37 CFR 3.71. Future correspondence will be mailed to the new address of record(37 CFR 1.33).

---

Office of Initial Patent Examination (571) 272-4000, or 1-800-PTO-9199
FORMER ATTORNEY/AGENT COPY

UNITED STATES PATENT AND TRADEMARK OFFICE

UNITED STATES DEPARTMENT OF COMMERCE
United States Patent and Trademark Office
Address: COMMISSIONER FOR PATENTS
P.O. Box 1450
Alexandria, Virginia 22313-1450
www.uspto.gov

PCE INDUSTRY, INC.
ATT. Steven Reiss
288 SOUTH MAYO AVENUE
CITY OF INDUSTRY, CA 91789

Mail Date: 04/21/2010

| | | |
|---|---|---|
| **Applicant** | : Kuan-Hong Hsieh | : DECISION ON REQUEST FOR |
| **Patent Number** | : 7599504 | : RECALCULATION of PATENT |
| **Issue Date** | : 10/06/2009 | : TERM ADJUSTMENT IN VIEW |
| **Appliction No** | : 10/955,285 | : OF WYETH AND NOTICE OF INTENT TO |
| **Filed** | : 09/30/2004 | : ISSUE CERTIFICATE OF CORRECTION |
| | | : |

The Request for Recalculation is **GRANTED** to the extent indicated.

The patent term adjustment has been determined to be **1406** days. The USPTO will *sua sponte* issue a certificate of correction reflecting the amount of PTA days determined by the recalculation.

Prior to the issuance of the certificate of correction, the USPTO will afford patentee an opportunity to be heard and request reconsideration. Accordingly, patentee has **one month or thirty (30) days**, whichever is longer, to file a request for reconsideration of this patent term adjustment calculation. See 35 U.S.C. 154(b)(3)(B)(ii) and 37 CFR 1.322(a)(4). No extensions of time will be granted under 37 CFR 1.136.

Patentee should use document code PET.OP if electronically filing a request for reconsideration of this patent term adjustment calculation. The patentee must also include the information required by 37 CFR 1.705(b)(2) and the fee required by 37 CFR 1.18(e). If patentee does not file a timely request for reconsideration of this patent term adjustment calculation including the information required by 37 CFR 1.705(b)(2) and the fee required by 37 CFR 1.18(e), the USPTO will issue a certificate of correction reflecting the PTA determination noted above.

Patentee should be aware that in order to preserve the right to review in the United States District Court for the District of Columbia of the USPTO patent term adjustment determination, patentee must ensure that he or she also take the steps required under 35 U.S.C. 154(b)(4)(A) in a timely manner. Nothing in the request for recalculation should be construed as providing an alternative time frame for commencing a civil action under 35 U.S.C. 154(b)(4)(A).

Any questions concerning this decision should be directed to the Office of Patent Legal Administration at 571-272-7702.

UNITED STATES PATENT AND TRADEMARK OFFICE

Commissioner for Patents
United States Patent and Trademark Office
P.O. Box 1450
Alexandria, VA 22313-1450
www.uspto.gov

MBHB/TRADING TECHNOLOGIES
300 SOUTH WACKER DRIVE
SUITE 3200
CHICAGO IL 60606

MAILED

JUL 0 2 2009

OFFICE OF PETITIONS

| | |
|---|---|
| In re Application | : |
| Fred Monroe et al. | : |
| Application No. 10/955,289 | : DECISION ON APPLICATION |
| Filed: September 30, 2004 | : FOR PATENT TERM ADJUSTMENT |
| Attorney Docket No. 04-831 | : |

This is in response to the REQUEST FOR RECONSIDERATION OF THE PATENT TERM ADJUSTMENT filed June 5, 2009. Applicant requests that the determination of patent term adjustment be corrected from six hundred forty-five (645) days to eight hundred forty-nine (849) days. Applicant requests this correction on the basis that the Office will take in excess of three years to issue this patent and in light of the recent court decision in Wyeth v. Dudas, No. 07-1492 (D.D.C. September 30, 2008).

As the instant application for patent term adjustment requests reconsideration of the patent term adjustment as it relates to the Office's failure to issue the patent within 3 years of the filing date, a decision is being held in abeyance until after the actual patent date. Knowledge of the actual date the patent issues is required to calculate the amount, if any, of additional patent term patentee is entitled to for Office failure to issue the patent within 3 years. See § 1.703(b). This is true even in this instance where a request for continued examination (RCE) was filed.

Applicant is given TWO (2) MONTHS from the issue date of the patent to file a written request for reconsideration of the patent term adjustment for Office failure to issue the patent within 3 years. A copy of this decision should accompany the request. Applicant may seek such consideration without payment of an additional fee. However, as to all other bases for seeking reconsideration of the patent term adjustment indicated in the patent, all requirements of § 1.705(d) must be met. Requests for reconsideration on other bases must be timely filed and must include payment of the required fee.

Rather than file the request for reconsideration of Patent Term Adjustment at the time of the mailing of the notice of allowance, applicant is advised that they may wait until the time of the issuance of the patent and file a request for reconsideration of the patent

term pursuant to 37 CFR 1.705(d). The USPTO notes that it does not calculate the amount of time earned pursuant to 37 CFR 1.702(b) until the time of the issuance of the patent and accordingly, the Office will consider any request for reconsideration of the patent term adjustment due to an error in the calculation of 37 CFR 1.702(b) to be timely if the request for reconsideration is filed within two months of the issuance of the patent.

The Office will charge petitioner's deposit account no. 13-2490 in the amount of $200.00 as set forth in 37 CFR 1.18(e), per the authorization noted in the petition. No additional fees are required.

The application is being forwarded to the Office of Data Management for issuance of the patent. The patent term adjustment indicated on the patent (as shown on the Issue Notification mailed about three weeks prior to patent issuance) will include any additional adjustment accrued both for Office delay in issuing the patent more than four months after payment of the issue fee and satisfaction of all outstanding requirements, and for the Office taking in excess of three years to issue the patent (to the extent that the three-year period does not overlap with periods already accorded).

Telephone inquiries specific to this decision should be directed to Senior Petitions Attorney Patricia Faison-Ball at (571) 272-3212.

Kery A. Fries

Kery A. Fries
Senior Legal Advisor
Office of Patent Legal Administration
Office of Deputy Commissioner
for Examination Policy

UNITED STATES PATENT AND TRADEMARK OFFICE

Commissioner for Patents
United States Patent and Trademark Office
P.O. Box 1450
Alexandria, VA 22313-1450
www.uspto.gov

MBHB/TRADING TECHNOLOGIES
300 SOUTH WACKER DRIVE
SUITE 3200
CHICAGO IL 60606

MAILED

JUL 02 2009

OFFICE OF PETITIONS

In re Application :
Fred Monroe et al. :
Application No. 10/955,289 : DECISION ON APPLICATION
Filed: September 30, 2004 : FOR PATENT TERM ADJUSTMENT
Attorney Docket No. 04-831 :

This is in response to the REQUEST FOR RECONSIDERATION OF THE PATENT TERM ADJUSTMENT filed June 5, 2009. Applicant requests that the determination of patent term adjustment be corrected from six hundred forty-five (645) days to eight hundred forty-nine (849) days. Applicant requests this correction on the basis that the Office will take in excess of three years to issue this patent and in light of the recent court decision in Wyeth v. Dudas, No. 07-1492 (D.D.C. September 30, 2008).

As the instant application for patent term adjustment requests reconsideration of the patent term adjustment as it relates to the Office's failure to issue the patent within 3 years of the filing date, a decision is being **HELD IN ABEYANCE** until after the actual patent date. Knowledge of the actual date the patent issues is required to calculate the amount, if any, of additional patent term patentee is entitled to for Office failure to issue the patent within 3 years. See § 1.703(b). This is true even in this instance where a request for continued examination (RCE) was filed.

Applicant is given TWO (2) MONTHS from the issue date of the patent to file a written request for reconsideration of the patent term adjustment for Office failure to issue the patent within 3 years. A copy of this decision should accompany the request. Applicant may seek such consideration without payment of an additional fee. However, as to all other bases for seeking reconsideration of the patent term adjustment indicated in the patent, all requirements of § 1.705(d) must be met. Requests for reconsideration on other bases must be timely filed and must include payment of the required fee.

Rather than file the request for reconsideration of Patent Term Adjustment at the time of the mailing of the notice of allowance, applicant is advised that they may wait until the time of the issuance of the patent and file a request for reconsideration of the patent

term pursuant to 37 CFR 1.705(d). The USPTO notes that it does not calculate the amount of time earned pursuant to 37 CFR 1.702(b) until the time of the issuance of the patent and accordingly, the Office will consider any request for reconsideration of the patent term adjustment due to an error in the calculation of 37 CFR 1.702(b) to be timely if the request for reconsideration is filed within two months of the issuance of the patent.

The Office will charge petitioner's deposit account no. 13-2490 in the amount of $200.00 as set forth in 37 CFR 1.18(e), per the authorization noted in the petition. No additional fees are required.

The application is being forwarded to the Office of Data Management for issuance of the patent. The patent term adjustment indicated on the patent (as shown on the Issue Notification mailed about three weeks prior to patent issuance) will include any additional adjustment accrued both for Office delay in issuing the patent more than four months after payment of the issue fee and satisfaction of all outstanding requirements, and for the Office taking in excess of three years to issue the patent (to the extent that the three-year period does not overlap with periods already accorded).

Telephone inquiries specific to this decision should be directed to Senior Petitions Attorney Patricia Faison-Ball at (571) 272-3212.

Kery A. Fries
Senior Legal Advisor
Office of Patent Legal Administration
Office of Deputy Commissioner
for Examination Policy

UNITED STATES PATENT AND TRADEMARK OFFICE

Commissioner for Patents
United States Patent and Trademark Office
P.O. Box 1450
Alexandria, VA 22313-1450
www.uspto.gov

COPY MAILED

DEC 04 2009

OFFICE OF PETITIONS

BRINKS HOFER GILSON &
LIONE/INFINEON
INFINEON
PO BOX 10395
CHICAGO IL 60610

| | | |
|---|---|---|
| In re Patent No. 7,446,211 | : | |
| Monroe, et al. | : | DECISION DISMISSING |
| Application No. 10/955,289 | : | REQUEST FOR |
| Issue Date: August 11, 2009 | : | RECONSIDERATION OF |
| Filed: September 30, 2004 | : | PATENT TERM ADJUSTMENT |
| Attorney Docket No. | : | UNDER 37 CFR 1.705 |
| 04-831 | : | |

This is in response to the REQUEST FOR RECONSIDERATION OF PATENT TERM ADJUSTMENT, filed August 20, 2009, which is properly treated under 37 C.F.R. §1.705(d). Patentees request that the determination of patent term adjustment be corrected from six hundred forty-five (645) days to eight hundred forty-nine (849) days.

The request for reconsideration of patent term adjustment is **DISMISSED** with respect to making any change in the patent term adjustment determination under 35 U.S.C. § 154(b) of 645 days.

On August 11, 2009, the application matured into U.S. Patent No. 7,574,391, with a revised patent term adjustment of 645 days. The Office determined that the 203 days of Office delay pursuant to 35 U.S.C. 154(b)(1)(B) and 37 CFR 1.702(b) overlaps with the 645 days of Office delay pursuant to 35 U.S.C. § 154(b)(1)(A) and 37 CFR 1.702(a)(1) accorded prior to the issuance of the patent. As such, 0 additional days of patent term adjustment were entered at issuance under the three-year pendency provision. Given the applicant delay of 0 days, the patent issued with a revised patent term adjustment of 645 (645 - 0) days.

On August 20, 2009, patentees timely submitted this request for reconsideration of patent term adjustment, asserting that the

correct number of days of Patent Term Adjustment is 849 days under the court's interpretation of the overlap provision as set forth in Wyeth v. Dudas, 580 F. Supp. 2d 138, 88 U.S.P.Q. 2d 1538 (D.D.C. 2008). Patentees assert that pursuant to Wyeth, a PTO delay under §154(b)(1)(A) overlaps with a delay under §154(b)(1)(B) only if the delays "occur on the same day." Patentees maintain that the total non-overlapping PTO delay under § 154(b)(1)(A) & (B) is 849 (645 + 204) days as these periods do not occur on the same day. Further, given the applicant delay of 0 days, patentees assert entitlement to 849 (849 - 0) days of patent term adjustment.

Patentees' interpretation of the period of overlap has been considered, but found inconsistent with the Office's interpretation of the overlap provision, 35 U.S.C. 154(b)(2)(A). 35 U.S.C. 154(b)(2)(A) limits the adjustment of patent term, as follows:

> to the extent that the periods of delay attributable to grounds specified in paragraph (1) overlap, the period of any adjustment granted under this subsection shall not exceed the actual number of days the issuance of the patent was delayed.

As explained in *Explanation of 37 CFR 1.703(f) and of the United States Patent and Trademark Office Interpretation of 35 U.S.C. 154(b)(2)(A)*, 69 Fed. Reg. 34283 (June 21, 2004), the Office interprets 35 U.S.C. 154(b)(2)(A) as permitting either patent term adjustment under 35 U.S.C. 154(b)(1)(A)(i)-(iv), or patent term adjustment under 35 U.S.C. 154(b)(1)(B), but not as permitting patent term adjustment under both 35 U.S.C. 154(b)(1)(A)(i)-(iv) and 154(b)(1)(B). Accordingly, the Office implements the overlap provision as follows:

> If an application is entitled to an adjustment under 35 U.S.C. 154(b)(1)(B), the entire period during which the application was pending (except for periods excluded under 35 U.S.C. 154(b)(1)(B)(i)-(iii)), and not just the period beginning three years after the actual filing date of the application, is the period of delay under 35 U.S.C. 154(b)(1)(B) in determining whether periods of delay overlap under 35 U.S.C. 154(b)(2)(A). Thus, any days of delay for Office issuance of the patent more than 3 years after the filing date of the application, which overlap with the days of patent term adjustment accorded prior to

> the issuance of the patent will not result in any additional patent term adjustment. See 35 U.S.C. 154(b)(1)(B), 35 U.S.C. 154(b)(2)(A), and 37 CFR § 1.703(f). See *Changes to Implement Patent Term Adjustment Under Twenty Year Term; Final Rule*, 65 Fed. Reg. 56366 (Sept. 18, 2000). See also *Revision of Patent Term Extension and Patent Term Adjustment Provisions; Final Rule*, 69 Fed. Reg. 21704 (April 22, 2004), 1282 Off. Gaz. Pat. Office 100 (May 18, 2004). See also *Explanation of 37 CFR 1.703(f) and of the United States Patent and Trademark Office Interpretation of 35 U.S.C. 154(b)(2)(A)*, 69 Fed. Reg. 34283 (June 21, 2004).

Further, as stated in the *Explanation of 37 CFR 1.703(f) and of the United States Patent and Trademark Office Interpretation of 35 U.S.C. 154(b)(2)(A)*, the Office has consistently taken the position that if an application is entitled to an adjustment under the three-year pendency provision of 35 U.S.C. 154(b)(1)(B), the entire period during which the application was pending before the Office (except for periods excluded under 35 U.S.C. 154(b)(1)(B)(i)-(iii)), and not just the period beginning three years after the actual filing date of the application, is the relevant period under 35 U.S.C. 154(b)(1)(B) in determining whether periods of delay "overlap" under 35 U.S.C. 154(b)(2)(A).

This interpretation is consistent with the statute. Taken together the statute and rule provide that to the extent that periods of delay attributable to grounds specified in 35 U.S.C. 154(b)(1) and in corresponding §1.702 overlap, the period of adjustment granted shall not exceed the actual number of days the issuance of the patent was delayed.

In this instance, the relevant period under 35 U.S.C. 154(b)(1)(B) in determining whether periods of delay "overlap" under 35 U.S.C. 154(b)(2)(A) is the period during which the application was pending before the Office beginning on the application filing date under 35 U.S.C. 111(a), September 30, 2004, and ending on the day before the date the Request for Continued Examination under 37 CFR 1.114 was filed, April 20, 2008, (not including any other periods excluded under 35 U.S.C. 154(b)(1)(B)(i)-(iii)).

Pursuant to 35 U.S.C. 154(b)(1)(A) and 37 CFR 1.702(a)(1), 645 days of patent term adjustment were accorded during the pendency of the application for Office delay. Pursuant to 35 U.S.C.

154(b)(1)(B) and 37 CFR 1.702(b), 203 days of patent term adjustment accrued for Office issuance of the patent more than 3 years after the filing date of the application.

The 203 days of patent term adjustment under 37 CFR 1.702(b) overlap with the 645 days of patent term adjustment under 37 CFR 1.702(a)(1). Entry of both the 645 days and the 203 days is neither permitted nor warranted. 645 days is the actual number of days issuance of the patent was delayed.

Accordingly, at issuance, the Office properly entered 0 additional days of adjustment pursuant to § 1.702(b).

In view thereof, no change will be made in the patent term adjustment of 645 days (645 days of Office delay - 0 days of applicant delay).

The petition fee of $200.00 as set forth in 37 CFR 1.18(e) will be charged to deposit account 13-2490. No additional fees are required.

Telephone inquiries specific to this matter should be directed to Kenya A. McLaughlin, Petitions Attorney, at (571) 272-3222.

Christina Tartera Donnell

Christina Tartera Donnell
Senior Petitions Attorney
Office of Petitions

UNITED STATES PATENT AND TRADEMARK OFFICE

UNITED STATES DEPARTMENT OF COMMERCE
United States Patent and Trademark Office
Address: COMMISSIONER FOR PATENTS
P.O. Box 1450
Alexandria, Virginia 22313-1450
www.uspto.gov

MBHB/TRADING TECHNOLOGIES
300 SOUTH WACKER DRIVE
SUITE 3200
CHICAGO, IL 60606

Mail Date: 04/20/2010

| | | |
|---|---|---|
| **Applicant** | : Fred Monroe | : DECISION ON REQUEST FOR |
| **Patent Number** | : 7574391 | : RECALCULATION of PATENT |
| **Issue Date** | : 08/11/2009 | : TERM ADJUSTMENT IN VIEW |
| **Appliction No** | : 10/955,289 | : OF WYETH AND NOTICE OF INTENT TO |
| **Filed** | : 09/30/2004 | : ISSUE CERTIFICATE OF CORRECTION |
| | | : |

The Request for Recalculation is **GRANTED** to the extent indicated.

The patent term adjustment has been determined to be **848** days. The USPTO will *sua sponte* issue a certificate of correction reflecting the amount of PTA days determined by the recalculation.

Prior to the issuance of the certificate of correction, the USPTO will afford patentee an opportunity to be heard and request reconsideration. Accordingly, patentee has **one month or thirty (30) days**, whichever is longer, to file a request for reconsideration of this patent term adjustment calculation. See 35 U.S.C. 154(b)(3)(B)(ii) and 37 CFR 1.322(a)(4). No extensions of time will be granted under 37 CFR 1.136.

Patentee should use document code PET.OP if electronically filing a request for reconsideration of this patent term adjustment calculation. The patentee must also include the information required by 37 CFR 1.705(b)(2) and the fee required by 37 CFR 1.18(e). If patentee does not file a timely request for reconsideration of this patent term adjustment calculation including the information required by 37 CFR 1.705(b)(2) and the fee required by 37 CFR 1.18(e), the USPTO will issue a certificate of correction reflecting the PTA determination noted above.

Patentee should be aware that in order to preserve the right to review in the United States District Court for the District of Columbia of the USPTO patent term adjustment determination, patentee must ensure that he or she also take the steps required under 35 U.S.C. 154(b)(4)(A) in a timely manner. Nothing in the request for recalculation should be construed as providing an alternative time frame for commencing a civil action under 35 U.S.C. 154(b)(4)(A).

Any questions concerning this decision should be directed to the Office of Patent Legal Administration at 571-272-7702.

UNITED STATES PATENT AND TRADEMARK OFFICE

Commissioner for Patents
United States Patent and Trademark Office
P.O. Box 1450
Alexandria, VA 22313-1450
www.uspto.gov

COPY MAILED
OCT 1 2 2006
OFFICE OF PETITIONS

INTELLECTUAL PROPERTY LAW OFFICES
1901 S. BASCOM AVENUE, SUITE 660
CAMPBELL, CA 95008

In re Application of Fox et al. :
Application No. 10/955,301 : Decision on Petition
Filing Date: September 30, 2004 :
Attorney Docket No. HSJ920040172US1 :

This is a decision on the petition under 37 CFR 1.137(b), filed June 30, 2006, to revive the above-identified application.

The petition is **granted**.

The above-identified application became abandoned for failure to submit the issue fee and publication fee in a timely manner in reply to the Notice of Allowance mailed February 6, 2006, which set a statutory period for reply of three (3) months. Accordingly, the above-identified application became abandoned May 7, 2006. A Notice of Abandonment was mailed June 14, 2006.

The instant petition requests revival of the application.

Petitioner has met the requirements to revive the above-identified application pursuant to 37 CFR 1.137(b). Therefore, the petition is granted and the application is revived.

The Office of Publications will be informed of the instant decision and the application will be issued as a patent in due course.

Telephone inquiries regarding this communication should be directed to Petitions Attorney Steven Brantley at (571) 272-3203.

Charles Steven Brantley
Senior Petitions Attorney
Office of Petitions

UNITED STATES PATENT AND TRADEMARK OFFICE

UNITED STATES DEPARTMENT OF COMMERCE
United States Patent and Trademark Office
Address: COMMISSIONER FOR PATENTS
P.O. Box 1450
Alexandria, Virginia 22313-1450
www.uspto.gov

PCE INDUSTRY, INC.
ATT. Steven Reiss
288 SOUTH MAYO AVENUE
CITY OF INDUSTRY, CA 91789

Mail Date: 04/21/2010

| | | |
|---|---|---|
| **Applicant** | : Kuan-Hong Hsieh | : DECISION ON REQUEST FOR |
| **Patent Number** | : 7596232 | : RECALCULATION of PATENT |
| **Issue Date** | : 09/29/2009 | : TERM ADJUSTMENT IN VIEW |
| **Appliction No** | : 10/955,310 | : OF WYETH AND NOTICE OF INTENT TO |
| **Filed** | : 09/30/2004 | : ISSUE CERTIFICATE OF CORRECTION |
| | | : |

The Request for Recalculation is **GRANTED** to the extent indicated.

The patent term adjustment has been determined to be **1399** days. The USPTO will *sua sponte* issue a certificate of correction reflecting the amount of PTA days determined by the recalculation.

Prior to the issuance of the certificate of correction, the USPTO will afford patentee an opportunity to be heard and request reconsideration. Accordingly, patentee has **one month or thirty (30) days**, whichever is longer, to file a request for reconsideration of this patent term adjustment calculation. See 35 U.S.C. 154(b)(3)(B)(ii) and 37 CFR 1.322(a)(4). No extensions of time will be granted under 37 CFR 1.136.

Patentee should use document code PET.OP if electronically filing a request for reconsideration of this patent term adjustment calculation. The patentee must also include the information required by 37 CFR 1.705(b)(2) and the fee required by 37 CFR 1.18(e). If patentee does not file a timely request for reconsideration of this patent term adjustment calculation including the information required by 37 CFR 1.705(b)(2) and the fee required by 37 CFR 1.18(e), the USPTO will issue a certificate of correction reflecting the PTA determination noted above.

Patentee should be aware that in order to preserve the right to review in the United States District Court for the District of Columbia of the USPTO patent term adjustment determination, patentee must ensure that he or she also take the steps required under 35 U.S.C. 154(b)(4)(A) in a timely manner. Nothing in the request for recalculation should be construed as providing an alternative time frame for commencing a civil action under 35 U.S.C. 154(b)(4)(A).

Any questions concerning this decision should be directed to the Office of Patent Legal Administration at 571-272-7702.

UNITED STATES PATENT AND TRADEMARK OFFICE

Commissioner for Patents
United States Patent and Trademark Office
P.O. Box 1450
Alexandria, VA 22313-1450
www.uspto.gov

**FROST BROWN TODD, LLC**
**2200 PNC CENTER**
**201 E. FIFTH STREET**
**CINCINNATI OH 45202**

**COPY MAILED**

MAY 06 2009

**OFFICE OF PETITIONS**

In re Application of

**OWENS,** William H. Jr.
Application No. 10/955,317
Filed: September 30, 2004
Attorney Docket No. **0008120/0526935**

DECISION ON PETITION
TO WITHDRAW
FROM RECORD

This is a decision on the Request to Withdraw as attorney or agent of record under 37 C.F.R. § 1.36(b), filed December 26, 2008.

The request is **APPROVED**.

A grantable request to withdraw as attorney/agent of record must be signed by every attorney/agent seeking to withdraw or contain a clear indication that one attorney is signing on behalf of another/others. The Office requires the practitioner(s) requesting withdrawal to certify that he, she, or they have: (1) given reasonable notice to the client, prior to the expiration of the response period, that the practitioner(s) intends to withdraw from employment; (2) delivered to the client or a duly authorized representative of the client all papers and property (including funds) to which the client is entitled; and (3) notified the client of any responses that may be due and the time frame within which the client must respond, pursuant 37 CFR 10.40(c).

The request was signed by Andrew Ulmer on behalf of all attorneys of record who are associated with customer No. 26874. All attorneys/agents associated with the Customer Number 26874 have been withdrawn. Applicant is reminded that there is no attorney of record at this time.

All future correspondence will be directed to the inventor William Owens, Jr. at the address indicated below. There is an outstanding Office action mailed November 26, 2008 that requires a reply from the applicant.

Telephone inquiries concerning this decision should be directed to Tredelle Jackson at 571-272-2783.

Tredelle D. Jackson
Paralegal Specialist
Office of Petitions

cc: **MR. WILLIAM H. OWENS, JR.**
**C/O GENESIS, INC.**
**365 GREAT CIRCLE ROAD**
**NASHVILLE TN 37228**

UNITED STATES PATENT AND TRADEMARK OFFICE

UNITED STATES DEPARTMENT OF COMMERCE
United States Patent and Trademark Office
Address: COMMISSIONER FOR PATENTS
P.O. Box 1450
Alexandria, Virginia 22313-1450
www.uspto.gov

WOOD, HERRON & EVANS, LLP (TOKYO ELECTRON)
2700 CAREW TOWER
441 VINE STREET
CINCINNATI, OH 45202

Mail Date: 04/20/2010

| | | |
|---|---|---|
| **Applicant** | : Darko Babic | : DECISION ON REQUEST FOR |
| **Patent Number** | : 7582181 | : RECALCULATION of PATENT |
| **Issue Date** | : 09/01/2009 | : TERM ADJUSTMENT IN VIEW |
| **Appliction No** | : 10/955,326 | : OF WYETH AND NOTICE OF INTENT TO |
| **Filed** | : 09/30/2004 | : ISSUE CERTIFICATE OF CORRECTION |
| | | : |

The Request for Recalculation is **GRANTED** to the extent indicated.

The patent term adjustment has been determined to be **1352** days. The USPTO will *sua sponte* issue a certificate of correction reflecting the amount of PTA days determined by the recalculation.

Prior to the issuance of the certificate of correction, the USPTO will afford patentee an opportunity to be heard and request reconsideration. Accordingly, patentee has **one month or thirty (30) days**, whichever is longer, to file a request for reconsideration of this patent term adjustment calculation. See 35 U.S.C. 154(b)(3)(B)(ii) and 37 CFR 1.322(a)(4). No extensions of time will be granted under 37 CFR 1.136.

Patentee should use document code PET.OP if electronically filing a request for reconsideration of this patent term adjustment calculation. The patentee must also include the information required by 37 CFR 1.705(b)(2) and the fee required by 37 CFR 1.18(e). If patentee does not file a timely request for reconsideration of this patent term adjustment calculation including the information required by 37 CFR 1.705(b)(2) and the fee required by 37 CFR 1.18(e), the USPTO will issue a certificate of correction reflecting the PTA determination noted above.

Patentee should be aware that in order to preserve the right to review in the United States District Court for the District of Columbia of the USPTO patent term adjustment determination, patentee must ensure that he or she also take the steps required under 35 U.S.C. 154(b)(4)(A) in a timely manner. Nothing in the request for recalculation should be construed as providing an alternative time frame for commencing a civil action under 35 U.S.C. 154(b)(4)(A).

Any questions concerning this decision should be directed to the Office of Patent Legal Administration at 571-272-7702.

UNITED STATES PATENT AND TRADEMARK OFFICE

Commissioner for Patents
United States Patent and Trademark Office
P.O. Box 1450
Alexandria, VA 22313-1450
www.uspto.gov

NELSON MULLINS RILEY & SCARBOROUGH, LLP
1320 MAIN STREET, 17TH FLOOR
COLUMBIA SC 29201

COPY MAILED

AUG 0 2 2005

OFFICE OF PETITIONS

| | |
|---|---|
| In re Application of<br>Craps et al.<br>Application No. 10/955,330<br>Filed: September 3, 2004<br>Attorney Docket No. 047589-0180<br>For: Apparatus and Method for Controlling the Temperature of an Electronic Device | DECISION GRANTING STATUS UNDER 37 CFR 1.47(a) |

This is in response to the petition under 37 CFR 1.47(a), filed on July 11, 2005. Petitioner obtained an extension of time for response within the fourth month. Accordingly, the petition is filed timely.

The petition is granted.

Petitioner showed that Terry Craps, the non-signing inventor, refused to join in the filing of the above-identified application after having been mailed the application papers. Specifically, the Statement of Facts of George Beck established that petitioner mailed a copy of the above-identified application and a Declaration via Federal Express to the last known address of the non-signing inventor. Copies of the letters to Mr. Craps and the Federal Express shipping records showing delivery to his last known address accompany the petition.

The above-identified application and papers have been reviewed and found in compliance with 37 CFR 1.47(a). This application is hereby accorded Rule 1.47(a) status. As provided in Rule 1.47(c), this Office will forward notice of this application's filing to the non-signing inventor at the address given in the present petition. Notice of the filing of this application will also be published in the Official Gazette.

The matter is being referred to Technology Center Art Unit 3744 for examination in due course.

Inquiries regarding this decision should be directed to the undersigned at (571) 272-3211.

Christina Tartera Donnell

Christina Tartera Donnell
Senior Petitions Attorney
Office of Petitions

UNITED STATES PATENT AND TRADEMARK OFFICE

Commissioner for Patents
United States Patent and Trademark Office
P.O. Box 1450
Alexandria, VA 22313-1450
www.uspto.gov

Terry Craps
3137 Emanual Church Road
Lexington, SC 29073

**COPY MAILED**

AUG 0 2 2005

**OFFICE OF PETITIONS**

| | | |
|---|---|---|
| In re Application of | : | |
| Craps et al. | : | |
| Application No. 10/955,330 | : | LETTER |
| Filed: September 3, 2004 | : | |
| Attorney Docket No. 047589-0180 | : | |
| For: Apparatus and Method for Controlling the | : | |
| Temperature of an Electronic Device | : | |

Dear Mr. Craps:

You are named as a joint inventor in the above-identified United States patent application filed under the provisions of 35 U.S.C. 116 (United States Code) and 37 CFR 1.47(a), Rules of Practice in Patent Cases. Should a patent be granted on the application you will be designated therein as a joint inventor.

As a named inventor you are entitled to inspect any paper in the file wrapper of the application, order copies of all or any part thereof (at a prepaid cost per 37 CFR 1.19) or make your position of record in the application. Alternatively, you may arrange to do any of the preceding through a registered patent attorney or agent presenting written authorization from you. If you care to join the application, counsel of record (see below) would presumably assist you. Joining in the application would entail the filing of an appropriate oath or declaration by you pursuant to 37 CFR 1.63.

Requests for information regarding your application should be directed to the File Information Unit at (703) 308-2733. Information regarding how to pay for and order a copy of the application, or a specific paper in the application should be directed to Certification Division at (703) 308-9726 or 1-800-972-6382 (outside the Washington D.C. area).

Christina Tartera Donnell

Christina Tartera Donnell
Senior Petitions Attorney
Office of Petitions

NELSON MULLINS RILEY & SCARBOROUGH, LLP
1320 MAIN STREET, 17TH FLOOR
COLUMBIA SC 29201

UNITED STATES PATENT AND TRADEMARK OFFICE

Commissioner for Patents
United States Patent and Trademark Office
P.O. Box 1450
Alexandria, VA 22313-1450
www.uspto.gov

Date : December 13, 2004

Patent No. :7,125,673
Inventor(s) :Chun-Yang Fan et al.
Issued :October 24, 2006
Title :CPG RERIEVAL OF DNA FROM FORMALIN-FIXED PATHOLOGY
:SPECIMEN FOR PROMOTER METHYLATION
Docket No. :D6445

Re: Request for Certificate of Correction

Consideration has been given your request for the issuance of a certificate of correction for the above-identified patent under the provisions of 37 CFR 1.322 and/or 1.323.

Assignees' names and addresses (assignment data) printed in a patent are based *solely* on information supplied in the appropriate space for identifying the assignment data, i.e., item 3 of the Fee(s) Transmittal Form PTOL-85B. After payment of the issue fee, correction of assignment data submitted on the PTOL-85B can only be done by Certificate of Correction under 37 CFR 1.323, with a request under 37 CFR 3.81(b).

A request for a patent to be corrected to state the name of the assignee must:

A. state that the assignment was submitted for recordation as set forth in 37 CFR 3.11 before issuance of the patent;
B. include a request for a certificate of correction under 37 CFR 1.323 along with the fee set forth in 37 CFR 1.20(a); and
C. include the processing fee set forth in 37 CFR 1.17(i).

If the request is granted, Certificates of Correction Branch will be notified that a Certificate of Correction may be issued.

See Manual of Patent Examining Procedure, Section 1481.01 (Rev. 3) (Oct. 2005).

*Applicant has not included items A and or C above, accordingly, the request for Certificate of Correction to add or change the assignee data is dismissed.*

Any request under 37 CFR 3.81(b) should be directed to the following address or facsimile number:

By mail: Mail Stop PETITIONS
Commissioner for Patents
Post Office Box 1450
Alexandria, VA 22313-1450

By hand: Customer Service Window
Mail Stop Petitions
Randolph Building
401 Dulany Street
Alexandria, VA 22314

By fax: 571-273-8300
ATTN: Office of Petitions

If a fee (currently $100) was previously submitted for consideration of a Request for Certificate of Correction, under CFR 1.323, to correct assignment data, no additional fee is required.

Any inquiry concerning this communication should be directed to Ms. A. Green at (703) 308-9380 ext. 123.

Angela Green
For Cecelia Newman
Decisions & Certificates
of Correction Branch
(703) 308-9390 or (703) 308- 9380 ext. 123

ADLER & ASSOCIATES
8011 CANDLE LANE
Houston, Texas 77071

CBN/arg

UNITED STATES PATENT AND TRADEMARK OFFICE

Commissioner for Patents
United States Patent and Trademark Office
P.O. Box 1450
Alexandria, VA 22313-1450
www.uspto.gov

EMC CORPORATION
OFFICE OF THE GENERAL COUNSEL
176 SOUTH STREET
HOPKINTON, MA 01748

**COPY MAILED**

JUL 27 2007

**OFFICE OF PETITIONS**

| | | |
|---|---|---|
| In re Application of | : | |
| Steven D. Sardella et al | : | |
| Application No. 10/955,354 | : | ON PETITION |
| Filed: September 30, 2004 | : | |
| Attorney Docket No. EMC-04-199 | : | |

This is a decision on the petition filed February 28, 2007 under 37 CFR 1.137(b), to revive the above-identified application.

The petition is **GRANTED.**

The above-identified application became abandoned for failure to submit the Issue fee in a timely manner in reply to the Notice of Allowance mailed August 15, 2006, which set a statutory period for reply of three (3) months. Accordingly, the above-identified application became abandoned on November 16, 2006.

The petition satisfies the conditions for revival pursuant to the provisions of 37 CFR 1.137(b) in that (1) the reply in the form of payment of the Issue fee; (2) the petition fee; and (3) the required statement of unintentional delay have been received. Accordingly, the issue fee is accepted as having been unintentionally delayed.

Telephone inquiries concerning this decision should be directed to the undersigned at (571) 272-3210.

This matter is being referred to the Publishing Division for further processing.

Irvin Dingle
Petitions Examiner
Office of Petitions

UNITED STATES PATENT AND TRADEMARK OFFICE

COMMISSIONER FOR PATENTS
UNITED STATES PATENT AND TRADEMARK OFFICE
P.O. BOX 1450
ALEXANDRIA, VA 22313-1450
www.uspto.gov

DUGAN & DUGAN, PC
245 Saw Mill River Road
Suite 309
Hawthorne, NY 10532

COPY MAILED

JUN 17 2008

OFFICE OF PETITIONS

In re Application of :
Christopher J. Petti :
Application No. 10/955,387 : DECISION ON PETITION
Filed: September 29, 2004 :
Attorney Docket No. SD-MA-122 :

This is a decision on the petition under 37 CFR 1.137(b), filed on October 5, 2007, to revive the above-identified application.

The application became abandoned for failure to file a proper reply to the final Office action mailed March 1, 2007. A Notice of Abandonment was mailed on September 13, 2007.

There is no indication that the person signing the instant petition was ever given a power of attorney or authorization of agent to prosecute the above-identified application. However, in accordance with 37 CFR 1.34(a), the signature of James A. Scheer appearing on the petition shall constitute a representation to the United States Patent and Trademark Office that he is authorized to represent the particular party in whose behalf he acts.

Additionally, it is not apparent whether the statement of unintentional delay was signed by a person who would have been in a position of knowing that the entire delay in filing the required reply from the due date for the reply until the filing of a grantable petition pursuant to 37 CFR 1.137(b) was unintentional. Nevertheless, in accordance with 37 CFR 10.18, the statement is accepted as constituting a certification of unintentional delay. However, in the event that petitioner has no knowledge that the delay was unintentional, petitioner must make such an inquiry to ascertain that, in fact, the delay was unintentional. If petitioner discovers that the delay was intentional, petitioner must so notify the Office.

The petition satisfies the requirements of 37 CFR 1.137(b) in that petitioner has supplied (1) the reply in the form of a Request for Continued Examination (RCE) under 37 CFR 1.114 with the $810 filing fee and an amendment; (2) the petition fee of $1,540; and (3) a proper statement of unintentional delay. Therefore, the petition is **GRANTED.**

This application is being revived for consideration of the RCE.

The application file is being referred to Technology Center Art Unit 2827 for further processing.

Telephone inquiries concerning this decision should be directed to the undersigned at (571) 272-3226.

Andrea Smith
Petitions Examiner
Office of Petitions

UNITED STATES PATENT AND TRADEMARK OFFICE

UNITED STATES DEPARTMENT OF COMMERCE
United States Patent and Trademark Office
Address: COMMISSIONER FOR PATENTS
P.O. Box 1450
Alexandria, Virginia 22313-1450
www.uspto.gov

HOLLINGSWORTH & FUNK
8500 Normandale Lake Blvd
SUITE 320
MINNEAPOLIS, MN 55437

Mail Date: 04/21/2010

| | | |
|---|---|---|
| **Applicant** | : Scott M. Freeberg | : DECISION ON REQUEST FOR |
| **Patent Number** | : 7647108 | : RECALCULATION of PATENT |
| **Issue Date** | : 01/12/2010 | : TERM ADJUSTMENT IN VIEW |
| **Appliction No** | : 10/955,393 | : OF WYETH AND NOTICE OF INTENT TO |
| **Filed** | : 09/30/2004 | : ISSUE CERTIFICATE OF CORRECTION |
| | | : |

The Request for Recalculation is **GRANTED** to the extent indicated.

The patent term adjustment has been determined to be **989** days. The USPTO will *sua sponte* issue a certificate of correction reflecting the amount of PTA days determined by the recalculation.

Prior to the issuance of the certificate of correction, the USPTO will afford patentee an opportunity to be heard and request reconsideration. Accordingly, patentee has **one month or thirty (30) days**, whichever is longer, to file a request for reconsideration of this patent term adjustment calculation. See 35 U.S.C. 154(b)(3)(B)(ii) and 37 CFR 1.322(a)(4). No extensions of time will be granted under 37 CFR 1.136.

Patentee should use document code PET.OP if electronically filing a request for reconsideration of this patent term adjustment calculation. The patentee must also include the information required by 37 CFR 1.705(b)(2) and the fee required by 37 CFR 1.18(e). If patentee does not file a timely request for reconsideration of this patent term adjustment calculation including the information required by 37 CFR 1.705(b)(2) and the fee required by 37 CFR 1.18(e), the USPTO will issue a certificate of correction reflecting the PTA determination noted above.

Patentee should be aware that in order to preserve the right to review in the United States District Court for the District of Columbia of the USPTO patent term adjustment determination, patentee must ensure that he or she also take the steps required under 35 U.S.C. 154(b)(4)(A) in a timely manner. Nothing in the request for recalculation should be construed as providing an alternative time frame for commencing a civil action under 35 U.S.C. 154(b)(4)(A).

Any questions concerning this decision should be directed to the Office of Patent Legal Administration at 571-272-7702.

UNITED STATES PATENT AND TRADEMARK OFFICE

Commissioner for Patents
United States Patent and Trademark Office
P.O. Box 1450
Alexandria, VA 22313-1450
www.uspto.gov

MERCHANT & GOULD PC
P.O. BOX 2903
MINNEAPOLIS MN 55402-0903

**COPY MAILED**

SEP 2 5 2008

**OFFICE OF PETITIONS**

In re Application of
Jinshan LI et al.
Application No. 10/955,396
Filed: September 30, 2004
Attorney Docket No.
15872.0082USO1/HS9200400

ON PETITION

This is a decision on the petition under the unintentional provisions of 37 CFR 1.137(b), filed July 17, 2008, to revive the above-identified application.

The petition is **DISMISSED**.

Any request for reconsideration of this decision must be submitted within TWO (2) MONTHS from the mail date of this decision. Extensions of time under 37 CFR 1.136(a) are permitted. The reconsideration request should include a cover letter entitled "Renewed Petition under 37 CFR 1.137(b)." This is **not** a final agency action within the meaning of 5 U.S.C. § 704.

The application became abandoned for failure to timely file a reply within the meaning of 37 CFR 1.113 to the final Office action of November 23, 2007. The proposed reply required for consideration of a petition to revive must be a Notice of Appeal (and appeal fee required by 37 CFR 41.20(b)(2)), an amendment that prima facie places the application in condition for allowance, a Request for Continued Examination (RCE) and submission (37 CFR 1.114), or the filing of a continuing application under 37 CFR 1.53(b). See MPEP 711.03(c)(III)(A)(2). No extensions of time pursuant to the provisions of 37 CFR 1.136(a) were obtained. Accordingly, the date of abandonment of this application is February 24, 2008.

A grantable petition under 37 CFR 1.137(b) must be accompanied by: (1) the required reply, unless previously filed; (2) the petition fee as set forth in 37 CFR 1.17(m); (3) a statement that the entire delay in filing the required reply from the due date for the reply until the filing of a grantable petition pursuant to 37 CFR 1.137(b) was unintentional; and (4) any terminal disclaimer (and fee as set forth in 37 CFR 1.20(d)) required by 37 CFR 1.137(d). Where there is a question as to whether either the abandonment or the delay in filing a petition under 37 CFR 1.137 was unintentional, the Director may require additional information. See MPEP 711.03(c)(II)(C) and (D). The instant petition lacks item(s) (1).

The Request for Continued Examination is not acceptable. In this regard, petitioner's attention is directed to 37 CFR 1.33(b), which states.

(b) Amendments and other papers. Amendments and other papers, except for written assertions pursuant to § 1.27(c)(2)(ii) of this part, filed in the application must be signed by:

(1) A registered patent attorney or patent agent of record appointed in compliance with § 1.32(b);

(2) A registered patent attorney or patent agent not of record who acts in a representative capacity under the provisions of § 1.34;

(3) An assignee as provided for under §3.71(b) of this chapter; or

(4) All of the applicants (§ 1.41(b)) for patent, unless there is an assignee of the entire interest and such assignee has taken action in the application in accordance with § 3.71 of this chapter.

An unsigned amendment (or other paper) or one not properly signed by a person having authority to prosecute the application is not entered. This applies, for instance, where the amendment (or other paper) is signed by only one of two applicants and the one signing has not been given a power of attorney by the other applicant.

Therefore, as the request is unsigned as well as not accompanied by payment of the required fee of $810, the petition is considered to not contain a proper reply.

37 CFR 1.137(b)(3) requires a statement that "the entire delay in filing the required reply from the due date for the reply until the filing of a grantable petition pursuant to 37 CFR 1.137(b) was unintentional." Since the statement appearing in the petition varies from the language required by 37 CFR 1.137(b)(3), the statement is being construed as the required statement. Petitioner must notify the Office if this is not a correct reading of the statement appearing in the petition.

An extension of time under 37 CFR 1.136 must be filed prior to the expiration of the maximum extendable period for reply. See In re Application of S., 8 USPQ2d 1630, 1631 (Comm'r Pats. 1988). Since the $ 1050 extension of time fee submitted with the petition on July 17, 2008 was subsequent to the maximum extendable period for reply, this fee is unnecessary and will be credited to petitioner's deposit account.

Further correspondence with respect to this matter should be addressed as follows:

By Mail: Mail Stop PETITION
Commissioner for Patents
P. O. Box 1450
Alexandria, VA 22313-1450

By hand: U. S. Patent and Trademark Office
Customer Service Window, Mail Stop Petitions
Randolph Building
401 Dulany Street
Alexandria, VA 22314

The centralized facsimile number is **(571) 273-8300.**

Telephone inquiries concerning this decision should be directed to Karin Reichle at (571) 272-6051.

David Bucci
Petitions Examiner
Office of Petitions

UNITED STATES PATENT AND TRADEMARK OFFICE

Commissioner for Patents
United States Patent and Trademark Office
P.O. Box 1450
Alexandria, VA 22313-1450
www.uspto.gov

**MERCHANT & GOULD PC**
**P.O. BOX 2903**
**MINNEAPOLIS MN 55402-0903**

COPY MAILED

JAN 13 2009

OFFICE OF PETITIONS

ON PETITION

In re Application of :
Jinshan LI et al. :
Application No. 10/955,396 :
Filed: September 30, 2004 :
Attorney Docket No. :
15872.0082USO1/HS9200400

This is a decision on the renewed petition under the unintentional provisions of 37 CFR 1.137(b), filed November 14, 2008, to revive the above-identified application.

The petition is **GRANTED**.

The application became abandoned for failure to timely file a reply within the meaning of 37 CFR 1.113 to the final Office action of November 23, 2007. The proposed reply required for consideration of a petition to revive must be a Notice of Appeal (and appeal fee required by 37 CFR 41.20(b)(2)), an amendment that prima facie places the application in condition for allowance, a Request for Continued Examination (RCE) and submission (37 CFR 1.114), or the filing of a continuing application under 37 CFR 1.53(b). See MPEP 711.03(c)(III)(A)(2). No extensions of time pursuant to the provisions of 37 CFR 1.136(a) were obtained. Accordingly, the date of abandonment of this application is February 24, 2008.

The petition satisfies the requirements of 37 CFR 1.137(b) in that petitioner has supplied (1) the reply in the form of a Request for Continued Examination (RCE) and fee of $ 810, and the submission required by 37 CFR 1.114; (2) the petition fee of $ 1540; and (3) a proper statement of unintentional delay.

A fee of $1620 for the renewed petition was debited to petitioner's deposit account. Since the petition fee need only be paid once, the $1620 fee charged with respect to thereto is unnecessary and will be credited to petitioner's deposit account

The application file does not indicate a change of address has been filed in this case, although the address given on the petition differs from the address of record. A change of address should be filed in this case in accordance with MPEP 601.03. A courtesy copy of this decision is being

mailed to the address noted on the petition. However, until otherwise instructed, all future correspondence regarding this application will be mailed solely to the address of record.

Telephone inquiries concerning this decision should be directed to the Felix O. Figueroa at (571) 272-6051.

This application is being referred to Technology Center AU 2627 for processing of the RCE and for appropriate action by the Examiner in the normal course of business on the amendment submitted in accordance with 37 CFR 1.114.

for David Bucci
Petitions Examiner
Office of Petitions

Cc: Merchant & Gould
3200 IDS Center
80 South Eighth Street
Minneapolis, MN 55402

UNITED STATES PATENT AND TRADEMARK OFFICE

Commissioner for Patents
United States Patent and Trademark Office
P.O. Box 1450
Alexandria, VA 22313-1450
www.uspto.gov

MERCHANT & GOULD PC
P.O. BOX 2903
MINNEAPOLIS MN 55402-0903

**COPY MAILED**

OCT 1 0 2008

**OFFICE OF PETITIONS**

ON PETITION

In re Application of :
Feliss, et al. :
Application No. 10/955,404 :
Filed: September 30, 2004 :
Attorney Docket No. :
15872.0093US01/HSJ9200401
For: SYSTEM, METHOD, AND APPARATUS
FOR A WIRELESS HARD DISK DRIVE

This is a decision on the petition under 37 CFR 1.137(b), filed July 17, 2008, to revive the above-identified application.

The petition under 37 CFR 1.137(b) is **GRANTED**.

This application became abandoned for failure to timely respond to the final Office action mailed November 27, 2007, which set an extendable three month period for reply. No extensions of time under 37 CFR 1.136(a) being obtained and no reply being received in the Office, this application became abandoned on February 28, 2008. The filing of the instant petition precedes the mailing of A Notice of Abandonment.

Applicants have submitted a RCE and required fee and amendment in reply to the November 27, 2007 final Office action, an acceptable statement of the unintentional nature of the delay in responding to the November 27, 2007 final Office action, and the petition fee. Therefore, the petition is granted.

Pursuant to 37 CFR 1.136, an extension of time must be filed prior to the expiration of the maximum period obtainable for reply to avoid abandonment. Accordingly, since the $1,050.00 extension of time submitted with the petition on July 17, 2008 was submitted subsequent to the expiration of the maximum period obtainable for reply, this fee is unnecessary and will be refunded to petitioners' credit card.

After the mailing of this decision the application will be forwarded to Technology Center AU 2184 for consideration of the RCE and amendment filed on July 17, 2008.

Telephone inquiries pertaining to this decision may be directed to the undersigned at (571) 272-3230.

Shirene Willis Brantley

Shirene Willis Brantley
Senior Petitions Attorney
Office of Petitions

UNITED STATES PATENT AND TRADEMARK OFFICE

Commissioner for Patents
United States Patent and Trademark Office
P.O. Box 1450
Alexandria, VA 22313-1450
www.uspto.gov

APR 12 2005

Elsie C. Turner
Suite 204
201 Park Place
Altamonte Springs FL 32701

| | | |
|---|---|---|
| In re Application of | : | |
| Nelson Boice | : | DECISION PETITION |
| Serial No.: 10/955,423 | : | |
| Filed: June 29, 2004 | : | |
| For: Bag Valve | : | |

This is in response to applicants' petition filed September 27, 2004, to make the above-identified application special under the provisions of 37 CFR 1.102(c), based on the age of the applicant.

Applicant has satisfied the provisions set forth in M.P.E.P. 708.02, IV. Therefore the petition is **GRANTED**.

**The application will be forwarded to the examiner for action on the merits commensurate with this decision.**

Should there be any questions with regard to this letter please contact Richard Bertsch by letter addressed to the Director, Technology Center 3700, P.O. Box 1450 Alexandria, VA 22313-1450, or by telephone at (571) 272-4050 or by facsimile transmission at (703) 872-9306.

Richard A. Bertsch

Richard A. Bertsch, Director
Technology Center 3700

UNITED STATES PATENT AND TRADEMARK OFFICE

Commissioner for Patents
United States Patent and Trademark Office
P.O. Box 1450
Alexandria, VA 22313-1450
www.uspto.gov

LUCE FORWARD HAMILTON & SCRIPPS LLP
11988 EL CAMINO REAL, SUITE 200
SAN DIEGO, CA 92130

COPY MAILED

JAN 13 2006

OFFICE OF PETITIONS

| | | |
|---|---|---|
| In re Application of | : | |
| Randolf Von Oepen et al | : | |
| Application No. 10/955,425 | : | DECISION ON PETITION |
| Filed: September 29, 2004 | : | TO MAKE SPECIAL UNDER |
| Attorney Docket No. JM-009 CON 8 | : | 37 CFR 1.102(d) |
| | : | |

This is a decision on the petition under 37 CFR §1.102(d), filed July 20, 2005, to make the above-identified application special based on actual infringement as set forth in M.P.E.P. § 708.02, Section II.

The petition is **GRANTED.**

A grantable petition to make an application special under 37 CFR §1.102(d) and MPEP §708.02, Section II: Infringement, must be accompanied by the required fee pursuant to 37 CFR 1.17(h) and a statement by the applicant, assignee, or attorney/agent registered to practice before the office alleging:

> (A) That there is an infringing device or product actually on the market or method in use;
>
> (B) That a rigid comparison of the alleged infringing device, product, or method with the claims of the application has been made, and that, in his or her opinion, some of the claims are unquestionably infringed; and
>
> (C) That he or she has made or caused to be made a careful and thorough search of the prior art or has a good knowledge of the pertinent prior art.
>
> Applicant must provide one copy of each of the references deemed most closely related to the subject matter encompassed by the claims if said references are not already of record.

The petition complies with all the above stated requirements. Accordingly, the above-identified application has been accorded "special" status

Telephone inquiries concerning this decision should be directed to Irvin Dingle at 571-272-3210.

All other inquiries concerning either the examination or status of the application should be directed to the Technology Center.

The application is being forwarded to the Technology Center Art Unit 3731 for action on the merits commensurate with this decision.

Amelia Au
Petitions Examiner
Office of Petitions

UNITED STATES PATENT AND TRADEMARK OFFICE

Commissioner for Patents
United States Patent and Trademark Office
P.O. Box 1450
Alexandria, VA 22313-1450
www.uspto.gov

**SMITH, GAMBRELL & RUSSELL, LLP**
**1230 PEACHTREE STREET, N.E.**
**SUITE 3100, PROMENADE II**
**ATLANTA GA 30309-3592**

**COPY MAILED**

JAN 10 2006

**OFFICE OF PETITIONS**

| | | |
|---|---|---|
| In re Application of | : | |
| Carlson et al. | : | |
| Application No. 10/955,436 | : | ON PETITION |
| Filed: September 30, 2004 | : | |
| Attorney Docket No. 031264.084 | : | |

This is a decision on the petition under 37 C.F.R. § 1.137(b), filed November 16, 2005, to revive the above-identified application.

The petition is **GRANTED.**

The petition satisfies the conditions for revival pursuant to the provisions of 37 CFR 1.137(b) in that (1) the reply in the form of an amendment; (2) the petition fee; and (3) the required statement of unintentional delay have been received. Accordingly, the response has been accepted as having been unintentionally delayed.

This matter is being referred to Technology Center 2800 for further examination on the merits.

Telephone inquiries regarding this decision should be directed to the undersigned at (571) 272-3282.

Liana Chase
Petitions Examiner
Office of Petitions

UNITED STATES PATENT AND TRADEMARK OFFICE

Commissioner for Patents
United States Patent and Trademark Office
P.O. Box 1450
Alexandria, VA 22313-1450
www.uspto.gov

Paper No. 111504

AKIN GUMP STRAUSS HAUER & FELD LLP
ONE COMMERCE SQUARE
2005 MARKET STREET, SUITE 2200
PHILADELPHIA, PA 19103-7013

DEC - 1 2004

| | | |
|---|---|---|
| In re Application of: | : | |
| THOMAS D. FENLEY | : | DECISION ON PETITION |
| Serial No.: 10/955,451 | : | TO MAKE SPECIAL |
| Filed: September 30, 2004 | : | |
| Attorney Docket No.: **7698-1U1** | : | |

This is a decision on the petition under 37 C.F.R. § 1.102(c), filed October 18, 2004, to make the above-identified application special.

Petitioner requests that the above-identified application be made special under the accelerated examination procedure set forth in the Manual of Patent Examining Procedure (M.P.E.P.) § 708.02, Section IV: Applicant's Age.

A grantable petition to make special under 37 C.F.R. § 1.102, and in accordance with M.P.E.P. § 708.02, Section IV, must include evidence showing that the applicant is sixty five (65) years of age or more. No fee is required for this petition.

The petition includes a birth certificate copy from the inventor, Thomas D. Fenley, stating that the he is sixty-five (65) years of age or more.

Accordingly, the petition is GRANTED.

After allowance, this application will be given priority for printing. See M.P.E.P. § 1309.

Inquiries regarding this decision should be directed to Clayton LaBalle at (571) 272-1594.

Clayton E. LaBalle

Clayton E. LaBalle, Special Programs Examiner
Technology Center 2800
Semiconductors, Electrical and Optical
Systems and Components

## SPE RESPONSE FOR CERTIFICATE OF CORRECTION

**Paper No.**:20050609

**DATE** : January 30, 2006

**TO SPE OF** : ART UNIT

**SUBJECT** : Request for Certificate of Correction on Patent No.:

A response is requested with respect to the accompanying request for a certificate of correction.

Please complete this form and return with file, within **7** days to:
**Certificates of Correction Branch - PK 3-910**
Palm location **7590** - Tel. No. 305-8201

With respect to the change(s) requested, correcting Office and/or Applicant's errors, should the patent read as shown in the certificate of correction? No new matter should be introduced, nor should the scope or meaning of the claims be changed.

**Thank You For Your Assistance** **Certificates of Correction Branch**

**The request for issuing the above-identified correction(s) is hereby:**
Note your decision on the appropriate box.

☑ **Approved** **All** changes apply.

☐ **Approved in Part** Specify below which changes **do not** apply.

☐ **Denied** State the reasons for denial below.

**Comments:**

P. Bradley
P. AUSTIN BRADLEY
SUPERVISORY PATENT EXAMINER
TECHNOLOGY CENTER 2800

for

**SPE:** david martin **Art Unit** 2837

(Also Form PTO-1050)

# UNITED STATES PATENT AND TRADEMARK OFFICE

# CERTIFICATE OF CORRECTION

PATENT NO : 10/955451

DATED :

INVENTOR(S) : **Thomas D. Fenley**

It is certified that error appears in the above-identified patent and that said Letters Patent is hereby corrected as shown below:

**Title page, Section (73)**

The assignee should read -- J.L. Behmer Corporation, Perkasie, PA (US) --.

OK
1/30/06

MAILING ADDRESS OF SENDER: **John D. Simmons**
**Akin Gump Strauss Hauer & Feld, L.L.P.**
**One Commerce Square, Suite 2200**
**2005 Market Street**
**Philadelphia, PA 19103**

PATENT NO. _____

No. of additional copies

→

UNITED STATES PATENT AND TRADEMARK OFFICE

UNITED STATES DEPARTMENT OF COMMERCE
United States Patent and Trademark Office
Address: COMMISSIONER FOR PATENTS
P.O. Box 1450
Alexandria, Virginia 22313-1450
www.uspto.gov

| APPL NO. | FILING OR 371 (c) DATE | ART UNIT | FIL FEE REC'D | ATTY.DOCKET NO | DRAWINGS | TOT CLMS | IND CLMS |
|---|---|---|---|---|---|---|---|
| 10/955,453 | 09/29/2004 | 2822 | 770 | ATM-343 | 12 | 10 | 2 |

003897
SCHNECK & SCHNECK
P.O. BOX 2-E
SAN JOSE, CA 95109-0005

**CONFIRMATION NO. 6697**

**CORRECTED FILING RECEIPT**

*OC000000015173102*

Date Mailed: 02/14/2005

Receipt is acknowledged of this regular Patent Application. It will be considered in its order and you will be notified as to the results of the examination. Be sure to provide the U.S. APPLICATION NUMBER, FILING DATE, NAME OF APPLICANT, and TITLE OF INVENTION when inquiring about this application. Fees transmitted by check or draft are subject to collection. Please verify the accuracy of the data presented on this receipt. **If an error is noted on this Filing Receipt, please write to the Office of Initial Patent Examination's Filing Receipt Corrections, facsimile number 703-746-9195. Please provide a copy of this Filing Receipt with the changes noted thereon. If you received a "Notice to File Missing Parts" for this application, please submit any corrections to this Filing Receipt with your reply to the Notice. When the USPTO processes the reply to the Notice, the USPTO will generate another Filing Receipt incorporating the requested corrections (if appropriate).**

**Applicant(s)**

Bohumil Lojek, Colorado Springs, CO;

**Power of Attorney:** The patent practitioners associated with Customer Number **003897**.

**Domestic Priority data as claimed by applicant**

This application is a DIV of 10/423,637 04/25/2003

**Foreign Applications**

**If Required, Foreign Filing License Granted:** 12/06/2004

**The country code and number of your priority application, to be used for filing abroad under the Paris Convention, is US10/955,453**

**Projected Publication Date:** 03/17/2005

**Non-Publication Request:** No

**Early Publication Request:** No

**Title**

Mirror image memory cell transistor pairs featuring poly floating spacers

**Preliminary Class**

257

---

## LICENSE FOR FOREIGN FILING UNDER
## Title 35, United States Code, Section 184
## Title 37, Code of Federal Regulations, 5.11 & 5.15

**GRANTED**

The applicant has been granted a license under 35 U.S.C. 184, if the phrase "IF REQUIRED, FOREIGN FILING LICENSE GRANTED" followed by a date appears on this form. Such licenses are issued in all applications where the conditions for issuance of a license have been met, regardless of whether or not a license may be required as set forth in 37 CFR 5.15. The scope and limitations of this license are set forth in 37 CFR 5.15(a) unless an earlier license has been issued under 37 CFR 5.15(b). The license is subject to revocation upon written notification. The date indicated is the effective date of the license, unless an earlier license of similar scope has been granted under 37 CFR 5.13 or 5.14.

This license is to be retained by the licensee and may be used at any time on or after the effective date thereof unless it is revoked. This license is automatically transferred to any related applications(s) filed under 37 CFR 1.53(d). This license is not retroactive.

The grant of a license does not in any way lessen the responsibility of a licensee for the security of the subject matter as imposed by any Government contract or the provisions of existing laws relating to espionage and the national security or the export of technical data. Licensees should apprise themselves of current regulations especially with respect to certain countries, of other agencies, particularly the Office of Defense Trade Controls, Department of State (with respect to Arms, Munitions and Implements of War (22 CFR 121-128)); the Office of Export Administration, Department of Commerce (15 CFR 370.10 (j)); the Office of Foreign Assets Control, Department of Treasury (31 CFR Parts 500+) and the Department of Energy.

**NOT GRANTED**

No license under 35 U.S.C. 184 has been granted at this time, if the phrase "IF REQUIRED, FOREIGN FILING LICENSE GRANTED" DOES NOT appear on this form. Applicant may still petition for a license under 37 CFR 5.12, if a license is desired before the expiration of 6 months from the filing date of the application. If 6 months has lapsed from the filing date of this application and the licensee has not received any indication of a secrecy order under 35 U.S.C. 181, the licensee may foreign file the application pursuant to 37 CFR 5.15(b).

UNITED STATES PATENT AND TRADEMARK OFFICE

COMMISSIONER FOR PATENTS
UNITED STATES PATENT AND TRADEMARK OFFICE
P.O. BOX 1450
ALEXANDRIA, VA 22313-1450
WWW.USPTO.GOV

Paper No.

MERCHANT & GOULD (MICROSOFT)
P.O. BOX 2903
MINNEAPOLIS MN 55402-0903

**COPY MAILED**

JUL 24 2008

| | | |
|---|---|---|
| In re Application of | : | |
| Bryant Fong et al. | : | |
| Application No. 10/955,471 | : | DECISION ON PETITION |
| Filed: September 30, 2004 | : | PURSUANT TO |
| Attorney Docket No.: | : | 37 C.F.R. § 1.59(b) |
| 309583.01/60001.427US01 | : | |
| Title: SYSTEMS AND METHODS FOR | : | |
| RECOMMENDATION OF PERSONAL | : | |
| NETWORK | | |

This is a decision on the petition filed March 19, 2008, pursuant to 37 C.F.R. § 1.59(b), requesting the expungement of an after-final amendment that was submitted on December 20, 2007, in response to a final Office action.

Receipt of the petition fee is acknowledged.

The petition is **DISMISSED**. The after-final amendment of December 20, 2007 will not be expunged from the record.

The application was filed on September 30, 2004. On November 16, 2007, the Office mailed a final Office action. On December 20, 2007, an after-final amendment was received, and on January 14, 2008, the Office mailed an advisory action.

Petitioner has set forth that the after-final amendment of December 20, 2007 was "inadvertently faxed to the central receiving office instead of the Examiner's desktop fax."

37 C.F.R. §1.59 sets forth, *in toto*:

> (a)
> (1) Information in an application will not be expunged, except as provided in paragraph (b) of this section or § 41.7(a) of this title.
> (2) Information forming part of the original disclosure (i.e., written specification including the claims, drawings, and any preliminary amendment specifically incorporated into an executed oath or declaration under §§ 1.63 and 1.175) will not be expunged from the application file.
> (b) An applicant may request that the Office expunge information, other than what is excluded by paragraph (a)(2) of this section, by filing a petition under this paragraph. Any petition to expunge information from an application must include the fee set forth in § 1.17(g) and establish to the satisfaction of the Director that the expungement of the information is appropriate in which case a notice granting the petition for expungement will be provided.
> (c) Upon request by an applicant and payment of the fee specified in § 1.19(b), the Office will furnish copies of an application, unless the application has been disposed of (see §§ 1.53(e), (f) and (g)). The Office cannot provide or certify copies of an application that has been disposed of.
>
> [48 FR 2710, Jan. 20, 1983, effective Feb. 27, 1983; 49 FR 554, Jan. 4, 1984, effective Apr. 1, 1984; 49 FR 48416, Dec. 12, 1984, effective Feb. 11, 1985; 50 FR 23123, May 31, 1985, effective Feb. 11, 1985; revised, 60 FR 20195, Apr. 25, 1995, effective June 8, 1995; revised, 62 FR 53131, Oct. 10, 1997, effective Dec. 1, 1997; para. (b) revised, 65 FR 54604, Sept. 8, 2000, effective Nov. 7, 2000; para. (b) revised, 68 FR 14332, Mar. 25, 2003, effective May 1, 2003; revised, 68 FR 38611, June 30, 2003, effective July 30, 2003; para. (a)(1) revised, 69 FR 49959, Aug. 12, 2004, effective Sept. 13, 2004; para. (b) revised, 69 FR 56481, Sept. 21, 2004, effective Nov. 22, 2004]

It is noted that the matter Petitioner wishes to have expunged does not form part of the original disclosure, and as such, Rule 1.59(a) is not applicable.

The amendment of December 20, 2007 was intentionally submitted. Moreover, the procedures set forth in MPEP § 724 are designed to enable the Office to ensure as complete a patent file wrapper as possible. Rule 1.59(b) provides that information in an application will not be expunged and returned, except as provided on petition. The well-established Office policy is to maintain a complete record of the prosecution history. Once the after-final amendment was filed, it became a part of the prosecution history. Petitioner has not submitted any argument that an exception to

this policy is warranted in this instance. Any issues arising from the filing of the amendment need to be otherwise addressed on the record.

See M.P.E.P. § 714.01(a)[1]. See also M.P.E.P. § 714.21.

Expungement of this amendment is not appropriate.

The Technology Center will be notified of this decision. The Technology Center's support staff will notify the Examiner of this decision, so that the Notice of Appeal that was received on May 16, 2008 can receive further processing.

Telephone inquiries regarding *this decision* should be directed to the undersigned at (571) 272-3225[2]. All other inquiries concerning examination procedures or status of the application should be directed to the Technology Center.

/Paul Shanoski/
Paul Shanoski
Senior Attorney
Office of Petitions

---

1 "When an unsigned or improperly signed amendment is received the amendment will be listed in the contents of the application file, but not entered."
2 Petitioner will note that all practice before the Office should be in writing, and the action of the Office will be based exclusively on the written record in the Office. See 37 C.F.R. § 1.2. As such, Petitioner is reminded that no telephone discussion may be controlling or considered authority for any further action(s) of Petitioner.

UNITED STATES PATENT AND TRADEMARK OFFICE

Commissioner for Patents
United States Patent and Trademark Office
P.O. Box 1450
Alexandria, VA 22313-1450
www.uspto.gov

Paper No. 020105

WILLIAM H. SWAIN
4662 GLEASON AVE.
SARASOTA, FL 34242

FEB 4 2005

| | | |
|---|---|---|
| In re Application of: | : | |
| WILLIAM H. SWAIN | : | DECISION ON PETITION |
| Serial No.: 10/955,507 | : | TO MAKE SPECIAL |
| Filed: October 01, 2004 | : | |
| Attorney Docket No.: | : | |

This is a decision on the petition under 37 C.F.R. § 1.102(c), filed December 09, 2004 to make the above-identified application special.

Petitioner requests that the above-identified application be made special under the accelerated examination procedure set forth in the Manual of Patent Examining Procedure (M.P.E.P.) § 708.02, Section IV: Applicant's Age.

A grantable petition to make special under 37 C.F.R. § 1.102, and in accordance with M.P.E.P. § 708.02, Section IV, must include evidence showing that the applicant is sixty five (65) years of age or more. No fee is required for this petition.

The petitions include a declaration from the inventor, William H. Swain, stating that he is sixty-five (65) years of age or more.

Accordingly, the petition is GRANTED.

After allowance, this application will be given priority for printing. See M.P.E.P. § 1309.

Inquiries regarding this decision should be directed to Jose G. Dees at (571) 272-1569.

Jose G. Dees, Special Programs Examiner
Technology Center 2800
Semiconductors, Electrical and Optical
Systems and Components

UNITED STATES PATENT AND TRADEMARK OFFICE

UNITED STATES DEPARTMENT OF COMMERCE
United States Patent and Trademark Office
Address: COMMISSIONER FOR PATENTS
P.O. Box 1450
Alexandria, Virginia 22313-1450
www.uspto.gov

GENERAL ELECTRIC COMPANY
GLOBAL RESEARCH
ONE RESEARCH CIRCLE
PATENT DOCKET RM. BLDG. K1-4A59
NISKAYUNA, NY 12309

Mail Date: 04/20/2010

| | | |
|---|---|---|
| **Applicant** | : Chellappa Balan | : DECISION ON REQUEST FOR |
| **Patent Number** | : 7595122 | : RECALCULATION of PATENT |
| **Issue Date** | : 09/29/2009 | : TERM ADJUSTMENT IN VIEW |
| **Appliction No** | : 10/955,508 | : OF WYETH AND NOTICE OF INTENT TO |
| **Filed** | : 10/01/2004 | : ISSUE CERTIFICATE OF CORRECTION |
| | | : |

The Request for Recalculation is **GRANTED** to the extent indicated.

The patent term adjustment has been determined to be **1333** days. The USPTO will *sua sponte* issue a certificate of correction reflecting the amount of PTA days determined by the recalculation.

Prior to the issuance of the certificate of correction, the USPTO will afford patentee an opportunity to be heard and request reconsideration. Accordingly, patentee has **one month or thirty (30) days**, whichever is longer, to file a request for reconsideration of this patent term adjustment calculation. See 35 U.S.C. 154(b)(3)(B)(ii) and 37 CFR 1.322(a)(4). No extensions of time will be granted under 37 CFR 1.136.

Patentee should use document code PET.OP if electronically filing a request for reconsideration of this patent term adjustment calculation. The patentee must also include the information required by 37 CFR 1.705(b)(2) and the fee required by 37 CFR 1.18(e). If patentee does not file a timely request for reconsideration of this patent term adjustment calculation including the information required by 37 CFR 1.705(b)(2) and the fee required by 37 CFR 1.18(e), the USPTO will issue a certificate of correction reflecting the PTA determination noted above.

Patentee should be aware that in order to preserve the right to review in the United States District Court for the District of Columbia of the USPTO patent term adjustment determination, patentee must ensure that he or she also take the steps required under 35 U.S.C. 154(b)(4)(A) in a timely manner. Nothing in the request for recalculation should be construed as providing an alternative time frame for commencing a civil action under 35 U.S.C. 154(b)(4)(A).

Any questions concerning this decision should be directed to the Office of Patent Legal Administration at 571-272-7702.

UNITED STATES PATENT AND TRADEMARK OFFICE

Commissioner for Patents
United States Patent and Trademark Office
P.O. Box 1450
Alexandria, VA 22313-1450
www.uspto.gov

OSTROLENK FABER GERB & SOFFEN
1180 AVENUE OF THE AMERICAS
NEW YORK, NY 10036-8403

**COPY MAILED**

JUN 28 2005

**OFFICE OF PETITIONS**

In re Application of :
William Sandoval :
Application No. 10/955,556 : ON PETITION
Filed: September 30, 2004 :
Attorney Docket No.: **P/10-675** :

This is a decision on the petition filed June 2, 2005, titled "Petition to Commissioner to Correct Filing Date."

The petition is **granted**.

The application was filed on September 30, 2004. On November 15, 2004, the Office of Initial Patent Examination mailed a Notice to File Missing Parts of Non-provisional Application ("Notice") stating that the application had been accorded a filing date of September 30, 2004, but that Figures 12A-C, as described in the specification, appeared to have been omitted. Relative to the omitted figures, the Notice set a non-extendable period for reply of two months form its mailing date. The Notice also required the filing of a properly executed oath or declaration and a surcharge.

In response, on November 26, 2004, applicant filed the omitted figures and a preliminary amendment. The Office of Initial Patent Examination changed the filing date to November 26, 2004. The instant petition was filed on June 6, 2005, requesting that the application filing date be restored to September 30, 2004. Applicant concedes that the Figures 12A-C were omitted from the original disclosure filed on September 30, 2004.

The Notice permits applicant to either: (1) promptly establish prior receipt in the Office of the items at issue (generally by way of a date-stamped postcard receipt (MPEP 503)), or (2) promptly submit the omitted items and accept the date of such submission as the application filing date. An applicant asserting that the missing items were in fact deposited in the Office with the application papers must file a petition (and the appropriate petition fee) with evidence of such deposit within two months of the mailing date of the Notice. An applicant desiring to submit the omitted items in a non-provisional application and accept the date of such submission as the application filing date must file any omitted items with an oath or declaration in compliance with 37 CFR 1.63 and 1.64 referring to such omitted items and a petition under 37 CFR 1.182 (with the petition fee under 37 CFR 1.17(h) requesting the later filing date within two months of the date of the Notice (37 CFR 1.181(f)). The Notice further indicates that if applicant fails to file a petition and petition fee under (1) or (2) above within two months of the mailing date of the Notice, the failure to act will be treated as a constructive acceptance of application as deposited. In the absence of a petition, the application will retain a filing date as of the date of deposit of the application and the original disclosure of the invention will include only those application papers present in the USPTO on the date of deposit.

A review of the record did not reveal a petition and supplemental oath filed within two months of the mailing date of the Notice such that would be necessary to accept the later filing date, i.e. November 26, 2004. In fact, the record did not reveal any petition filed within the two months of the mailing date of the Notice. It is, therefore, apparent that applicant did not intend to accept the later filing date when filing the

omitted figures and preliminary amendment on November 26, 2004,. The Office of Initial Patent Examination erred in changing the filing date of the application.

The petition to correct the filing date of the application is granted, accordingly. The application filing date will be changed to September 30, 2004, including only those papers filed on that date. Figures 12A-C will not be included as part of the original disclosure.

The application file will be directed to the Office of Initial Patent Examination for further processing with a filing date of September 30, 2004. The Office of Initial Patent Examination will issue a corrected filing receipt. Thereafter, the application file will be directed to the appropriate technology center for treatment of the preliminary amendment filed on November 26, 2004.

Telephone inquiries concerning this decision may be directed to the undersigned at (571) 272-3222.

Kenya A. McLaughlin

Kenya A. McLaughlin
Petitions Attorney
Office of Petitions

UNITED STATES PATENT AND TRADEMARK OFFICE

COMMISSIONER FOR PATENTS
UNITED STATES PATENT AND TRADEMARK OFFICE
P.O. BOX 1450
ALEXANDRIA, VA 22313-1450
WWW.USPTO.GOV

Paper No. None

CANTOR COLBURN, LLP
55 GRIFFIN ROAD SOUTH
BLOOMFIELD CT 06002

COPY MAILED

MAY 2 7 2005

OFFICE OF PETITIONS

In re Application of
Bing Zhao, William Budleski, Will Middelaer, and Kenneth Wendt
Application No. 10/955,562
Filed: September 30, 2004
Attorney Docket No. SDA-0002
Title: DIFFRACTIVE NON-CONTACT LASER GAUGE

DECISION ON PETITION UNDER 37 C.F.R. §1.47(a)

This is in response to the petition under 37 C.F.R. §1.47(a)[1], filed January 27[2], 2005.

On September 30, 2004, the application was deposited, identifying Bing Zhao, William Budleski, Will Middelaer, and Kenneth Wendt as joint inventors. An executed oath or declaration was not included on filing. On November 26, 2004, a "Notice to File Missing Parts of Nonprovisional Application – Filing Date Granted" (Notice) was mailed, indicating that a fully executed oath or declaration and the associated surcharge were required. This Notice set a two-month period for reply.

---

1 A grantable petition under 37 C.F.R. §1.47(a) requires:
(1) the petition fee of $130;
(2) a surcharge of either $65 or $130 if the petition is not filed at the time of filing the application, as set forth in 37 CFR § 1.16(e);
(3) a statement of the last known address of the non-signing inventors;
(4) either
a) proof that a copy of the entire application (specification, claims, drawings, and the oath or declaration) was sent or given to the non-signing inventor for review and proof that the non-signing inventor refuses to join in the application or
b) proof that the non-signing inventor cannot be found or reached after diligent effort;
(5) a declaration which complies with 37 CFR §1.63.

2 The petition contains a certificate of mailing dated January 25, 2005.

With the instant petition, Petitioner has also submitted the petition fee[3], the associated surcharge, the last known address of the non-signing inventors, a declaration which has been executed by the first two named inventors, a statement of facts, and copies of letters.

Petitioner has met each of the 5 requirements above.

The petition is **GRANTED** and this application is hereby accorded Rule §1.47(a) status.

As provided in Rule 1.47(a), this Office will forward notice of this application's filing to the non-signing inventor at the address given in the petition. Notice of the filing of this application will also be published in the Official Gazette.

After this decision is mailed, the application will be forwarded to Technology Center 2800 for further processing.

The general phone number for the Office of Petitions which should be used for status requests is (571) 272-3282. Telephone inquiries regarding *this decision* should be directed to the undersigned at (571) 272-3225.

Paul Shanoski

**Paul Shanoski**
**Senior Attorney**
**Office of Petitions**
**United States Patent and Trademark Office**

3 Petitioner has included $130, when the amount due is $200. The deficiency has been charged to Petitioner's Deposit Account.

UNITED STATES PATENT AND TRADEMARK OFFICE

UNITED STATES DEPARTMENT OF COMMERCE
United States Patent and Trademark Office
Address: COMMISSIONER FOR PATENTS
P.O. Box 1450
Alexandria, Virginia 22313-1450
www.uspto.gov

Pearne & Gordon LLP
1801 East 9th Street
Suite 1200
Cleveland, OH 44114-3108

Mail Date: 04/20/2010

| | | |
|---|---|---|
| **Applicant** | : Massimo Rossi | : DECISION ON REQUEST FOR |
| **Patent Number** | : 7572857 | : RECALCULATION of PATENT |
| **Issue Date** | : 08/11/2009 | : TERM ADJUSTMENT IN VIEW |
| **Appliction No** | : 10/955,564 | : OF WYETH AND NOTICE OF INTENT TO |
| **Filed** | : 09/30/2004 | : ISSUE CERTIFICATE OF CORRECTION |
| | | : |

The Request for Recalculation is **GRANTED** to the extent indicated.

The patent term adjustment has been determined to be **1083** days. The USPTO will *sua sponte* issue a certificate of correction reflecting the amount of PTA days determined by the recalculation.

Prior to the issuance of the certificate of correction, the USPTO will afford patentee an opportunity to be heard and request reconsideration. Accordingly, patentee has **one month or thirty (30) days**, whichever is longer, to file a request for reconsideration of this patent term adjustment calculation. See 35 U.S.C. 154(b)(3)(B)(ii) and 37 CFR 1.322(a)(4). No extensions of time will be granted under 37 CFR 1.136.

Patentee should use document code PET.OP if electronically filing a request for reconsideration of this patent term adjustment calculation. The patentee must also include the information required by 37 CFR 1.705(b)(2) and the fee required by 37 CFR 1.18(e). If patentee does not file a timely request for reconsideration of this patent term adjustment calculation including the information required by 37 CFR 1.705(b)(2) and the fee required by 37 CFR 1.18(e), the USPTO will issue a certificate of correction reflecting the PTA determination noted above.

Patentee should be aware that in order to preserve the right to review in the United States District Court for the District of Columbia of the USPTO patent term adjustment determination, patentee must ensure that he or she also take the steps required under 35 U.S.C. 154(b)(4)(A) in a timely manner. Nothing in the request for recalculation should be construed as providing an alternative time frame for commencing a civil action under 35 U.S.C. 154(b)(4)(A).

Any questions concerning this decision should be directed to the Office of Patent Legal Administration at 571-272-7702.

UNITED STATES PATENT AND TRADEMARK OFFICE

Commissioner for Patents
United States Patent and Trademark Office
P.O. Box 1450
Alexandria, VA 22313-1450
www.uspto.gov

Paper No.

HOWSON & HOWSON LLP / WYETH
501 OFFICE CENTER DRIVE
SUITE 210
FORT WASHINGTON PA 19034

**MAILED**

MAY 12 2009

**OFFICE OF PETITIONS**

In re Application of :
Venkata Ramana Rao et al. :
Application No. 10/955,567 : ON APPLICATION FOR
Filed: September 30, 2004 : PATENT TERM ADJUSTMENT
Atty Docket No. AM-101457USA :

This is in response to the APPLICATION FOR PATENT TERM ADJSUTMENT, INCLUDING REQUEST FOR RECONSIDERATION OF PATENT TERM ADJUSTMENT UNDER 37 CFR §1.705(b) filed on January 13, 2009. Applicant requests that the determination of patent term adjustment be corrected from five hundred eighty-nine (589) days to seven hundred forty-nine (749) days. Applicant requests this correction on the basis that the Office will take in excess of three years to issue this patent and in light of the recent court decision in Wyeth v. Dudas, 580 F. Supp. 2d 138, 88 U.S.P.Q. 2d 1538 (D.D.C. 2008).

As the instant application for patent term adjustment requests reconsideration of the patent term adjustment as it relates to the Office's failure to issue the patent within 3 years of the filing date, a decision is being **held in abeyance** until after the actual patent date. Knowledge of the actual date the patent issues is required to calculate the amount, if any, of additional patent term patentee is entitled to for Office failure to issue the patent within 3 years. See § 1.703(b). (This is true even in this instance where a request for continued examination (RCE) was filed. The computer will not undertake the § 1.703(b) calculation until the actual date of issuance of the patent has been determined[1].[2] Accordingly, it is

[1] The computer will also enter any additional periods of adjustment for Office delay and any additional periods of reduction for applicant delay after the mailing of the notice of allowance, such as pursuant to 37 CFR 1.703(a)(6) for Office delay and 37 CFR 1.704(c)(10) for applicant delay.

still too soon to make a determination as to the correctness of any period of adjustment that will or will not be entered pursuant to § 1.703(b)).

Applicant is given TWO (2) MONTHS from the issue date of the patent to file a written request for reconsideration of the patent term adjustment for Office failure to issue the patent within 3 years. A copy of this decision should accompany the request. Applicant may seek such consideration without payment of an additional fee. However, as to all other bases for seeking reconsideration of the patent term adjustment indicated in the patent, all requirements of § 1.705(d) must be met. Requests for reconsideration on other bases must be timely filed and must include payment of the required fee.

Rather than file the request for reconsideration of Patent Term Adjustment at the time of the mailing of the notice of allowance, applicant is advised that they may wait until the time of the issuance of the patent and file a request for reconsideration of the patent term pursuant to 37 CFR 1.705(d). The USPTO notes that it does not calculate the amount of time earned pursuant to 37 CFR 1.702(b) until the time of the issuance of the patent and accordingly, the Office will consider any request for reconsideration of the patent term adjustment due to an error in the calculation of 37 CFR 1.702(b) to be timely if the request for reconsideration is filed within two months of the issuance of the patent.

It is acknowledged that applicant is correct that any period of adjustment will be entered in light of 35 U.S.C. 154(B) GUARANTEE OF NO MORE THAN 3-YEAR APPLICATION PENDENCY, which provides that:

> Subject to the limitations under paragraph (2), if the issue of an original patent is delayed due to the failure of the United States Patent and Trademark Office to issue a patent within 3 years after the actual filing date of the application in the United States, not including —
>
> (i) any time consumed by continued examination of the application requested by the applicant under section 132(b);

---

[2] It is also noted that only a single period of reduction of 12 days would be entered for applicant delay in filing a response on November 5, 2007. The Office would not, as suggested, duplicate this reduction.

It is noted that a Request for Continued Examination (RCE) was first filed in this application on March 10, 2008.

The Office acknowledges submission of the $200.00 fee set forth in 37 CFR 1.18(e). No additional fees are required.

Applicants state that the application is not subject to a terminal disclaimer.

The application is being forwarded to the Office of Data Management for issuance of the patent. The patent term adjustment indicated on the patent (as shown on the Issue Notification mailed about three weeks prior to patent issuance) will include any additional adjustment accrued both for Office delay in issuing the patent more than four months after payment of the issue fee and satisfaction of all outstanding requirements, and for the Office taking in excess of three years to issue the patent (to the extent that the three-year period does not overlap with periods already accorded).

Telephone inquiries specific to this decision should be directed to Senior Petitions Attorney Douglas I. Wood at (571) 272-3231.

Nancy Johnson
Senior Petitions Attorney
Office of Petitions

UNITED STATES PATENT AND TRADEMARK OFFICE

Commissioner for Patents
United States Patent and Trademark Office
P.O. Box 1450
Alexandria, VA 22313-1450
www.uspto.gov

Paper No.

HOWSON & HOWSON LLP / WYETH
501 OFFICE CENTER DRIVE
SUITE 210
FORT WASHINGTON PA 19034

COPY MAILED
DEC 23 2009
OFFICE OF PETITIONS

| | | |
|---|---|---|
| In re Patent No. 7,544,370 | : | DECISION ON |
| Rao et al. | : | REQUEST FOR |
| Application No. 10/955,567 | : | RECONSIDERATION OF |
| Issue Date: June 9, 2009 | : | PATENT TERM ADJUSTMENT |
| Filed: September 30, 2004 | : | UNDER 37 CFR 1.705 |
| Attorney Docket No. | : | AND NOTICE OF INTENT TO ISSUE |
| AM-101457USA | : | CERTIFICATE OF CORRECTION |

This is in response to the APPLICATION FOR PATENT TERM ADJUSTMENT and REQUEST FOR DEFERRAL, filed on August 7, 2009, which is treated as an application for patent term adjustment under 37 CFR 1.705(d). Patentee requests that the determination of patent term adjustment be corrected from four hundred ninety-five (495) days to seven hundred sixty-three (763) days.

The request for reconsideration of patent term adjustment is **GRANTED TO THE EXTENT INDICATED.**

The patent term adjustment indicated in the patent is to be corrected by issuance of a certificate of correction showing a revised Patent Term Adjustment of six hundred fifteen (615) days.

Patentees are given THIRTY (30) DAYS or ONE (1) MONTH, whichever is longer, from the mail date of this decision to respond to this decision. No extensions of time will be granted under § 1.136.

**BACKGROUND**

On June 9, 2009, the application matured into U.S. Patent No. 7,544,370, with a revised patent term adjustment of 495 days. The Office determined that 161 days of Office delay pursuant to 35 U.S.C. 154(b)(1)(B) and 37 CFR 1.702(b) overlaps with the 601

days of Office delay pursuant to 35 U.S.C. 154(b)(1)(A) and 37 CFR 1.702(a)(1) accorded prior to the filing of the request for continued examination (RCE). As such, no additional days of patent term adjustment were entered at issuance under the three-year pendency provision. An additional period of 26 days of Office delay under 37 CFR 1.704(a)(4) was entered for the Office issuing patent on June 9, 2009, four (4) months and 26 days after the payment of the issue fee. Given the applicant delay of 132 days, the patent issued with a revised patent term adjustment of 495 (601 + 26 - 132) days.

On August 7, 2009, patentee timely submitted this request for reconsideration of patent term adjustment (with required fee), asserting that the correct number of days of Patent Term Adjustment is 763 days, in part, under the courts interpretation of the overlap provision as set forth in Wyeth v. Dudas, 580 F. Supp. 2d 138, 88 U.S.P.Q. 2d 1538 (D.D.C. 2008). Patentee asserts that pursuant to Wyeth, a PTO delay under §154(b)(1)(A) overlaps with a delay under §154(b)(1)(B) only if the delays "fall on the same calendar day." Patentee maintains that the total non-overlapping PTO delay under §154(b)(1)(A) & (B) is (601 + 160) days as these periods do not occur on the same day. Patentee further asserts that the reduction for applicant delay of 120 days for the filing of a miscellaneous incoming letter on January 13, 2009 should be removed because the paper filed on January 13, 2009 was an application for patent term adjustment under 37 CFR 1.705(b). Given the asserted applicant delay of 12 (132 - 120) days, patentee asserts entitlement to 763 (601 + 160 + 26 - 12) days of patent term adjustment.

**OPINION**

With respect to the 120 day period of delay for the filing of a miscellaneous incoming letter on January 13, 2009, patentee's argument is well taken. The paper filed on January 13, 2009, is an application for patent term adjustment under 37 CFR 1.705(b).

§ 1.704(e) provides that

> Submission of an application for patent term adjustment under § 1.705(b) (with or without a request under § 1.705(c) for reinstatement of reduced patent term adjustment) will not be considered a failure to engage in reasonable efforts to conclude prosecution

> (processing or examination) of the application under paragraph (c)(10) of this section.

Accordingly, no reduction is warranted for the filing of the application for patent term adjustment on January 13, 2009. The 120 day period of reduction for applicant delay will therefore be removed.

Patentee's calculation of a period of delay of 160 days, pursuant to 37 CFR 1.702(b), for the Office taking in excess of three years to issue the patent, is incorrect. The period of adjustment under § 1.702(b) is the number of days in the period beginning on the day after the date that is three years after the date on which the application was filed under 35 U.S.C. 111(a), and ending on the day before the date on which an RCE was filed.

Pursuant to 37 CFR 1.703(b), the period of adjustment under 37 CFR 1.702(b) should be 161 days, counting the number of days beginning on October 1, 2007, the day after the date that is three years after the filing date, and ending on the day prior to the date of filing of an RCE, March 9, 2008, rather than 160 days as calculated by patentee. Patentee's argument is articulated accordingly.

Nonetheless, patentee's interpretation of the period of overlap has been considered, but found inconsistent with the Office's interpretation of the overlap provision, 35 U.S.C. 154(b)(2)(A). 35 U.S.C. 154(b)(2)(A) limits the adjustment of patent term, as follows:

> to the extent that the periods of delay attributable to grounds specified in paragraph (1) overlap, the period of any adjustment granted under this subsection shall not exceed the actual number of days the issuance of the patent was delayed.

As explained in *Explanation of 37 CFR 1.703(f) and of the United States Patent and Trademark Office Interpretation of 35 U.S.C. 154(b)(2)(A)*, 69 Fed. Reg. 34283 (June 21, 2004), the Office interprets 35 U.S.C. 154(b)(2)(A) as permitting either patent term adjustment under 35 U.S.C. 154(b)(1)(A)(i)-(iv), or patent term adjustment under 35 U.S.C. 154(b)(1)(B), but not as permitting patent term adjustment under both 35 U.S.C.

154(b)(1)(A)(i)-(iv) and 154(b)(1)(B). Accordingly, the Office implements the overlap provision as follows:

> If an application is entitled to an adjustment under 35 U.S.C. 154(b)(1)(B), the entire period during which the application was pending (except for periods excluded under 35 U.S.C. 154(b)(1)(B)(i)-(iii)), and not just the period beginning three years after the actual filing date of the application, is the period of delay under 35 U.S.C. 154(b)(1)(B) in determining whether periods of delay overlap under 35 U.S.C. 154(b)(2)(A). Thus, any days of delay for Office issuance of the patent more than 3 years after the filing date of the application, which overlap with the days of patent term adjustment accorded prior to the issuance of the patent will not result in any additional patent term adjustment. See 35 U.S.C. 154(b)(1)(B), 35 U.S.C. 154(b)(2)(A), and 37 CFR § 1.703(f). See *Changes to Implement Patent Term Adjustment Under Twenty Year Term; Final Rule*, 65 Fed. Reg. 56366 (Sept. 18, 2000). See also *Revision of Patent Term Extension and Patent Term Adjustment Provisions; Final Rule*, 69 Fed. Reg. 21704 (April 22, 2004), 1282 Off. Gaz. Pat. Office 100 (May 18, 2004). See also *Explanation of 37 CFR 1.703(f) and of the United States Patent and Trademark Office Interpretation of 35 U.S.C. 154(b)(2)(A)*, 69 Fed. Reg. 34283 (June 21, 2004).

Further, as stated in the *Explanation of 37 CFR 1.703(f) and of the United States Patent and Trademark Office Interpretation of 35 U.S.C. 154(b)(2)(A)*, the Office has consistently taken the position that if an application is entitled to an adjustment under the three-year pendency provision of 35 U.S.C. 154(b)(1)(B), the entire period during which the application was pending before the Office (except for periods excluded under 35 U.S.C. 154(b)(1)(B)(i)-(iii)), and not just the period beginning three years after the actual filing date of the application, is the relevant period under 35 U.S.C. 154(b)(1)(B) in determining whether periods of delay "overlap" under 35 U.S.C. 154(b)(2)(A).

This interpretation is consistent with the statute. Taken together the statute and rule provide that to the extent that periods of delay attributable to grounds specified in 35 U.S.C. 154(b)(1) and in corresponding §1.702 overlap, the period of adjustment granted shall not exceed the actual number of days the issuance of the patent was delayed.

In this instance, the relevant period under 35 U.S.C. 154(b)(1)(B) in determining whether periods of delay "overlap" under 35 U.S.C. 154(b)(2)(A) is the period during which the application was pending before the Office beginning on the application filing date under 35 U.S.C. 111(a), September 30, 2004, and ending with the filing of a request for continued examination (RCE) (not including any other periods excluded under 35 U.S.C. 154(b)(1)(B)(i)-(iii)). The relevant period ends with the filing of the RCE as the three-year time frame specified in 35 U.S.C. 154(b)(1)(B) does not include the period subsequent to the filing of the RCE. 35 U.S.C. 154(b)(1)(B)(i).

Pursuant to 35 U.S.C. 154(b)(1)(A) and 37 CFR 1.702(a)(1) and (a)(2), 601 days of patent term adjustment were accorded during the pendency of the application for Office delay prior to the filing of the request for continued examination. Pursuant to 35 U.S.C. 154(b)(1)(A) and 37 CFR 1.702(a)(4), 26 days of patent term adjustment were accorded during the pendency of the application for Office delay after the filing of the request for continued examination. Pursuant to 35 U.S.C. 154(b)(1)(B) and 37 CFR 1.702(b), 161 days of patent term adjustment accrued for Office issuance of the patent more than 3 years after the filing date of the application.

The 161 days of patent term adjustment under 37 CFR 1.702(b) overlap with the 601 days of patent term adjustment under 37 CFR 1.702(a)(1). Entry of both the 161 days and the 601 days is neither permitted nor warranted. Considering the 26 days of Office delay under 1.702(a)(4) 627 (601 + 26) days is the actual number of days issuance of the patent was delayed.

Accordingly, at issuance, no additional days should have been entered.

**CONCLUSION**

Considering the correction of applicant delay to 12 days, the patent term adjustment at issuance is revised to 615 (627 - 12) days.

The application file is being forwarded to the Certificates of Correction Branch of issuance of a certificate of correction in order to rectify this error. The Office will issue a certificate of correction indicating that the term of the above-

identified patent is extended or adjusted by six hundred fifteen (615) days.

The Office acknowledges submission of the $200.00 fee set forth in 37 CFR 1.18(e).[1] No additional fees are required.

Telephone inquiries specific to this matter should be directed to Senior Petitions Attorney Douglas I. Wood, at (571) 272-3231.

Anthony Knight
Supervisor
Office of Petitions

Encl: DRAFT Certificate of Correction

[1] As applicant requested reconsideration not only of the prior decision, which was held in abeyance, but also consideration under 37 CFR 1.705(d) of the period of applicant delay of 120 days, charging of the petition fee is appropriate.

**DRAFT COPY**

UNITED STATES PATENT AND TRADEMARK OFFICE

# CERTIFICATE OF CORRECTION

PATENT : 7,544,370 B2

DATED : Jun. 9, 2009

INVENTOR(S) : Rao et al.

It is certified that error appears in the above-identified patent and that said Letters Patent is hereby corrected as shown below:

On the cover page,

[*] Notice: Subject to any disclaimer, the term of this patent is extended or adjusted under 35 USC 154(b) by (495) days

Delete the phrase "by 495 days" and insert – by 615 days--

UNITED STATES PATENT AND TRADEMARK OFFICE

UNITED STATES DEPARTMENT OF COMMERCE
United States Patent and Trademark Office
Address: COMMISSIONER FOR PATENTS
P.O. Box 1450
Alexandria, Virginia 22313-1450
www.uspto.gov

HOGAN & HARTSON LLP
ONE TABOR CENTER, SUITE 1500
1200 SEVENTEENTH ST
DENVER, CO 80202

Mail Date: 04/20/2010

| | | |
|---|---|---|
| **Applicant** | : Xue-Mei Gong | : DECISION ON REQUEST FOR |
| **Patent Number** | : 7593482 | : RECALCULATION of PATENT |
| **Issue Date** | : 09/22/2009 | : TERM ADJUSTMENT IN VIEW |
| **Appliction No** | : 10/955,569 | : OF WYETH AND NOTICE OF INTENT TO |
| **Filed** | : 09/30/2004 | : ISSUE CERTIFICATE OF CORRECTION |
| | | : |

The Request for Recalculation is **GRANTED** to the extent indicated.

The patent term adjustment has been determined to be **1240** days. The USPTO will *sua sponte* issue a certificate of correction reflecting the amount of PTA days determined by the recalculation.

Prior to the issuance of the certificate of correction, the USPTO will afford patentee an opportunity to be heard and request reconsideration. Accordingly, patentee has **one month or thirty (30) days**, whichever is longer, to file a request for reconsideration of this patent term adjustment calculation. See 35 U.S.C. 154(b)(3)(B)(ii) and 37 CFR 1.322(a)(4). No extensions of time will be granted under 37 CFR 1.136.

Patentee should use document code PET.OP if electronically filing a request for reconsideration of this patent term adjustment calculation. The patentee must also include the information required by 37 CFR 1.705(b)(2) and the fee required by 37 CFR 1.18(e). If patentee does not file a timely request for reconsideration of this patent term adjustment calculation including the information required by 37 CFR 1.705(b)(2) and the fee required by 37 CFR 1.18(e), the USPTO will issue a certificate of correction reflecting the PTA determination noted above.

Patentee should be aware that in order to preserve the right to review in the United States District Court for the District of Columbia of the USPTO patent term adjustment determination, patentee must ensure that he or she also take the steps required under 35 U.S.C. 154(b)(4)(A) in a timely manner. Nothing in the request for recalculation should be construed as providing an alternative time frame for commencing a civil action under 35 U.S.C. 154(b)(4)(A).

Any questions concerning this decision should be directed to the Office of Patent Legal Administration at 571-272-7702.

UNITED STATES PATENT AND TRADEMARK OFFICE

UNITED STATES DEPARTMENT OF COMMERCE
United States Patent and Trademark Office
Address: COMMISSIONER FOR PATENTS
P.O. Box 1450
Alexandria, Virginia 22313-1450
www.uspto.gov

The Law Offices of John C. Scott, LLC
c/o PortfolioIP
P.O. Box 52050
Minneapolis, MN 55402

Mail Date: 04/21/2010

| | | |
|---|---|---|
| **Applicant** | : Ada S. Y. Poon | : DECISION ON REQUEST FOR |
| **Patent Number** | : 7577209 | : RECALCULATION of PATENT |
| **Issue Date** | : 08/18/2009 | : TERM ADJUSTMENT IN VIEW |
| **Appliction No** | : 10/955,597 | : OF WYETH AND NOTICE OF INTENT TO |
| **Filed** | : 09/30/2004 | : ISSUE CERTIFICATE OF CORRECTION |
| | | : |

The Request for Recalculation is **GRANTED** to the extent indicated.

The patent term adjustment has been determined to be **928** days. The USPTO will *sua sponte* issue a certificate of correction reflecting the amount of PTA days determined by the recalculation.

Prior to the issuance of the certificate of correction, the USPTO will afford patentee an opportunity to be heard and request reconsideration. Accordingly, patentee has **one month or thirty (30) days**, whichever is longer, to file a request for reconsideration of this patent term adjustment calculation. See 35 U.S.C. 154(b)(3)(B)(ii) and 37 CFR 1.322(a)(4). No extensions of time will be granted under 37 CFR 1.136.

Patentee should use document code PET.OP if electronically filing a request for reconsideration of this patent term adjustment calculation. The patentee must also include the information required by 37 CFR 1.705(b)(2) and the fee required by 37 CFR 1.18(e). If patentee does not file a timely request for reconsideration of this patent term adjustment calculation including the information required by 37 CFR 1.705(b)(2) and the fee required by 37 CFR 1.18(e), the USPTO will issue a certificate of correction reflecting the PTA determination noted above.

Patentee should be aware that in order to preserve the right to review in the United States District Court for the District of Columbia of the USPTO patent term adjustment determination, patentee must ensure that he or she also take the steps required under 35 U.S.C. 154(b)(4)(A) in a timely manner. Nothing in the request for recalculation should be construed as providing an alternative time frame for commencing a civil action under 35 U.S.C. 154(b)(4)(A).

Any questions concerning this decision should be directed to the Office of Patent Legal Administration at 571-272-7702.

# UNITED STATES PATENT AND TRADEMARK OFFICE

UNITED STATES DEPARTMENT OF COMMERCE
United States Patent and Trademark Office
Address: COMMISSIONER FOR PATENTS
P.O. Box 1450
Alexandria, Virginia 22313-1450
www.uspto.gov

| APPLICATION NO. | FILING DATE | FIRST NAMED INVENTOR | ATTORNEY DOCKET NO. | CONFIRMATION NO. |
|---|---|---|---|---|
| 10/955,601 | 09/29/2004 | Sergei V. Koveshnikov | 10559-957001/P19536 | 6409 |

20985 7590 02/25/2009
FISH & RICHARDSON, PC
P.O. BOX 1022
MINNEAPOLIS, MN 55440-1022

| EXAMINER |
|---|
| CHEA, THORL |

| ART UNIT | PAPER NUMBER |
|---|---|
| 1795 | |

| NOTIFICATION DATE | DELIVERY MODE |
|---|---|
| 02/25/2009 | ELECTRONIC |

**Please find below and/or attached an Office communication concerning this application or proceeding.**

The time period for reply, if any, is set in the attached communication.

Notice of the Office communication was sent electronically on above-indicated "Notification Date" to the following e-mail address(es):

PATDOCTC@fr.com

UNITED STATES PATENT AND TRADEMARK OFFICE

Commissioner for Patents
United States Patent and Trademark Office
P.O. Box 1450
Alexandria, VA 22313-1450
www.uspto.gov

caf

Mailed: 2/25/09
In re application of
Koveshnikov et al.
Serial No. 10/955,601
Filed: September 29, 2004
For: OPTICAL COATINGS

DECISION ON PETITION

This is a decision on the PETITION UNDER 37 CFR §1.144, 1.181 FOR REVIEW OF WITHDRAWAL OF CLAIMS FROM CONSIDERATION.

On December 14, 2007, a three-way restriction requirement was mailed to Applicant. Applicants traversed the requirement in a response filed on January 11, 2008. The examiner made the requirement final in an office action mailed April 16, 2008.

Petitioner argues that the examiner has not properly established that the article (Group III) and process for its manufacture (Group II) are distinct inventions.

## DECISION

MPEP states:

**806.05 Related Inventions**

Where two or more related inventions are being claimed, the principal question to be determined in connection with a requirement to restrict or a rejection on the ground of double patenting is whether or not the inventions as claimed are distinct. If they are distinct, restriction may be proper. If they are not distinct, restriction is never proper. If nondistinct inventions are claimed in separate applications or patents, double patenting must be held, except where the additional applications were filed consonant with a requirement to restrict in a national application.
The various pairs of related inventions are noted in the following sections.

**806.05(f) Process of Making and Product Made [R-5]**

A process of making and a product made by the process can be shown to be distinct inventions if either or both of the following can be shown: (A) that the process *as claimed* is not an obvious process of making the product and the

process as *claimed* can be used to make another materially different product; or (B) that the product *as claimed* can be made by another materially different process.

In the present application, there are three groups of claims. Group I is withdrawn from consideration. The restriction between Groups II and III is traversed.. Group II is directed towards a process. Group III is directed towards an article.

The examiner alleged in the restriction requirement that "In the instant case, the device claimed in Group III is made by different process due to the thickness of reflective coating."

The burden is on the examiner to provide reasonable examples that recite material differences. The examiner did not provide an example of another and materially different process. Since the examiner did not provide an example of another and materially different process, the examiner has not shown that the groups of claims are independent and distinct. Therefore the restriction requirement is not proper. Further, the examiner's response to applicants' traversal is deemed inappropriate because it relates to product-by-process claims. There are no product-by-process claims in the instant application.

The instant petition is **GRANTED.** The examiner is directed to withdraw the requirement and prepare a new office action.

/JACQUELINE STONE/

Jacqueline M. Stone, Director
Technology Center 1700
Chemical and Materials Engineering

FISH & RICHARDSON, PC
P.O. BOX 1022
MINNEAPOLIS MN 55440-1022

UNITED STATES PATENT AND TRADEMARK OFFICE

Commissioner for Patents
United States Patent and Trademark Office
P.O. Box 1450
Alexandria, VA 22313-1450
www.uspto.gov

PATENT DEPARTMENT - 53051
KILPATRICK STOCKTON LLP
1001 WEST FOURTH STREET
WINSTON-SALEM, NC 27101

COPY MAILED

JUL 27 2007

OFFICE OF PETITIONS

| | | |
|---|---|---|
| In re Application of | : | |
| Gilad Israel Elbaz, et al. | : | |
| Application No. 10/955,660 | : | DECISION ON PETITION |
| Filed: September 30, 2004 | : | TO WITHDRAW |
| Attorney Docket No. 53051/302346 | : | FROM RECORD |
| | : | |

This is a decision on the Request to Withdraw as attorney or agent of record under 37 C.F.R. § 1.36(b) filed February 20, 2007.

The request is **DISMISSED** as moot.

A review of the file record indicates that the power of attorney to Kilpatrick Stockton, LLP has been revoked by the assignee of the patent application on March 5, 2007. Accordingly, the request to withdraw under 37 C.F.R. § 1.36(b) is moot.

All future communications from the Office will continue to be directed to the below-listed address until otherwise notified by applicant.

Telephone inquires concerning this decision should be directed to undersigned at 571-272-1642.

April M. Wise
Petitions Examiner
Office of Petitions

cc: JOHN A. DRAGSETH, ESQ.
FISH & RICHARDSON, PC
60 SOUTH SIXTH STREET
SUITE 3300
MINNEAPOLIS, MN 55402

UNITED STATES PATENT AND TRADEMARK OFFICE

Commissioner for Patents
United States Patent and Trademark Office
P.O. Box 1450
Alexandria, VA 22313-1450
www.uspto.gov

**WHITE & CASE LLP, PATENT DEPARTMENT**
**1155 AVENUE OF THE AMERICAS**
**NEW YORK, NY 10036**

COPY MAILED

APR 06 2007

OFFICE OF PETITIONS

In re Application of :
Feng-Feng Wang et al :
Application No. 10/955,661 : DECISION ON PETITION
Filed: September 30, 2004 :
Attorney Docket No. :
1617880-0011

This is a decision on the petition under 37 CFR 1.137(b), filed October 2, 2006, to revive the above-identified application.

The petition is **GRANTED**.

The application became abandoned for failure to reply in a timely manner to the Notice to File Missing Parts of Nonprovisional Application (Notice), mailed November 15, 2004, which required the submission of an executed oath or declaration and a $65 surcharge for the late filing of the oath or declaration. The Notice set a period for reply of two (2) months from the mail date of the Notice. An executed oath and a $65 surcharge fee were received on January 25, 2005; however, no extensions of time were obtained under the provisions of 37 CFR 1.136(a). Accordingly, the application became abandoned on January 16, 2005.

The petition satisfies the requirements of 37 CFR 1.137(b) in that petitioner has supplied (1) the required reply, (2) the petition fee of $750, and (3) a proper statement of unintentional delay. Accordingly, the failure to timely reply to the Notice of November 15, 2004 is accepted as being unintentionally delayed.

It is not apparent whether the person signing the statement of unintentional delay was in a position to have firsthand or direct knowledge of the facts and circumstances of the delay at issue. Nevertheless, such statement is being treated as having been made as the result of a reasonable inquiry into the facts and circumstances of such delay. See 37 CFR 10.18(b) and Changes to Patent Practice and Procedure; Final Rule Notice, 62 Fed. Reg. 53131, 53178 (October 10, 1997), 1203 Off. Gaz. Pat. Office 63,

103 (October 21, 1997). In the event that such an inquiry has not been made, petitioner must make such an inquiry. If such inquiry results in the discovery that it is not correct that the entire delay in filing the required reply from the due date for the reply until the filing of a grantable petition pursuant to 37 CFR 1.137(b) was unintentional, petitioner must notify the Office.

An extension of time under 37 CFR 1.136 must be filed prior to the expiration of the maximum extendable period for reply. *See* In re Application of S., 8 USPQ2d 1630, 1631 (Comm'r Pats. 1988). Since the $60 extension of time fee submitted with the petition on October 2, 2006 was subsequent to the maximum extendable period for reply, this fee is unnecessary and will be credited to petitioner's deposit account.

This application is being referred to the Office of Initial Patent Examination for further pre-examination processing.

Telephone inquiries concerning this decision should be directed to the undersigned at (571) 272-3218.

Frances Hicks
Petitions Examiner
Office of Petitions

UNITED STATES PATENT AND TRADEMARK OFFICE

Commissioner for Patents
United States Patent and Trademark Office
P.O. Box 1450
Alexandria, VA 22313-1450
www.uspto.gov

BLAKELY SOKOLOFF TAYLOR
& ZAFMAN
1279 OAKMEAD PARKWAY
SUNNYVALE, CA 94085-4040

**COPY MAILED**

AUG 06 2007

**OFFICE OF PETITIONS**

In re Application of

Doyle, et al.

Application No. 10/955,670

Filed: September 29, 2004

Attorney Docket No. 42P18700

DECISION ON PETITION

This is a decision on the petition under 37 CFR 1.137(b), filed March 23, 2007, to revive the above-identified application.

The petition is **GRANTED**.

The above-cited application became abandoned for failure to reply in a timely manner to the non-final Office action mailed January 25, 2006, which set a shortened statutory period for reply of three (3) months. No extension of time pursuant to 37 CFR 1.136(a) was obtained within the statutory period. Accordingly, the application became abandoned on April 26, 2006. A Notice of Abandonment was mailed on December 22, 2006.

The amendment filed March 23, 2007, is noted and made of record.

The application is being forwarded to Technology Center 2800, GAU 2818 for further processing.

Telephone inquiries concerning this decision should be directed to the undersigned at (571) 272-3222.

Kenya A. McLaughlin
Petitions Attorney
Office of Petitions

UNITED STATES PATENT AND TRADEMARK OFFICE

Commissioner for Patents
United States Patent and Trademark Office
P.O. Box 1450
Alexandria, VA 22313-1450
www.uspto.gov

**Morrison & Foerster LLP**
**755 Page Mill Road**
**Palo Alto, CA 94304-1018**

COPY MAILED

MAR 2 1 2007

OFFICE OF PETITIONS

In re Application of

Paul J. Simmons et al.
Application No. 10/955,709
Filed: September 29, 2004
Attorney Docket No. 273402006020

DECISION ON PETITION
TO WITHDRAW
FROM RECORD

This is a decision on the Request to Withdraw as attorney or agent of record under 37 C.F.R. § 1.36(b), filed August 8, 2006.

The request is **APPROVED**.

A grantable request to withdraw as attorney/agent of record must be signed by every attorney/agent seeking to withdraw or contain a clear indication that one attorney is signing on behalf of another/others. A request to withdraw will not be approved unless at least 30 (thirty) days would remain between the date of approval and the later of the expiration date of a time to file a response or the expiration date of the maximum time period which can be extended under 37 C.F.R. § 1.136(a).

The request was signed by Catherine M. Polizzi on behalf of all attorneys of record.

All attorneys/agents have been withdrawn.

Applicant is reminded that there is no attorney of record at this time.

The request to change the correspondence of record is not acceptable as the requested correspondence address is not that of: (1) the first named signing inventor; or (2) an intervening assignee of the entire interest under 37 C.F.R 3.71. All future communications from the Office will be directed to the first named signing inventor at the first copied address below until otherwise properly notified by the applicant.

There is no outstanding Office action at this time.

Telephone inquiries concerning this decision should be directed to Terri Williams at 571-272-2991.

J. Williams

Terri Williams
Petitions Examiner
Office of Petitions

cc: **Paul Simmons**
**Human Stem Cell Laboratory**
**Peter MacCallum Cancer Institute**
**Level 1 Research**
**St. Andrews Place**
**East Melbourne, 3002**
**Australia**

cc: **Mr. John White**
**Cooper & Dunham LLP**
**1185 Avenue of the Americas**
**New York, NY 10036**

UNITED STATES PATENT AND TRADEMARK OFFICE

Commissioner for Patents
United States Patent and Trademark Office
P.O. Box 1450
Alexandria, VA 22313-1450
www.uspto.gov

OIPE IAP22
APR 03 2007
PATENT & TRADEMARK OFFICE

Morrison & Foerster LLP
755 Page Mill Road
Palo Alto, CA 94304-1018

COPY MAILED

MAR 21 2007

OFFICE OF PETITIONS

In re Application of

Paul J. Simmons et al.
Application No. 10/955,709
Filed: September 29, 2004
Attorney Docket No. 273402006020

DECISION ON PETITION
TO WITHDRAW
FROM RECORD

This is a decision on the Request to Withdraw as attorney or agent of record under 37 C.F.R. § 1.36(b), filed August 8, 2006.

The request is **APPROVED**.

A grantable request to withdraw as attorney/agent of record must be signed by every attorney/agent seeking to withdraw or contain a clear indication that one attorney is signing on behalf of another/others. A request to withdraw will not be approved unless at least 30 (thirty) days would remain between the date of approval and the later of the expiration date of a time to file a response or the expiration date of the maximum time period which can be extended under 37 C.F.R. § 1.136(a).

The request was signed by Catherine M. Polizzi on behalf of all attorneys of record.

All attorneys/agents have been withdrawn.

Applicant is reminded that there is no attorney of record at this time.

The request to change the correspondence of record is not acceptable as the requested correspondence address is not that of: (1) the first named signing inventor; or (2) an intervening assignee of the entire interest under 37 C.F.R 3.71. All future communications from the Office will be directed to the first named signing inventor at the first copied address below until otherwise properly notified by the applicant.

There is no outstanding Office action at this time.

Telephone inquiries concerning this decision should be directed to Terri Williams at 571-272-2991.

T. Williams

Terri Williams
Petitions Examiner
Office of Petitions

cc: **Paul Simmons**
**Human Stem Cell Laboratory**
**Peter MacCallum Cancer Institute**
**Level 1 Research**
**St. Andrews Place**
**East Melbourne, 3002**
**Australia**

cc: **Mr. John White**
**Cooper & Dunham LLP**
**1185 Avenue of the Americas**
**New York, NY 10036**

UNITED STATES PATENT AND TRADEMARK OFFICE

UNITED STATES DEPARTMENT OF COMMERCE
United States Patent and Trademark Office
Address: COMMISSIONER FOR PATENTS
P.O. Box 1450
Alexandria, Virginia 22313-1450
www.uspto.gov

Docket Administrator - Room 3D-201E
Alcatel-Lucent USA Inc.
600-700 Mountain Avenue
Murray Hill, NJ 07974

Mail Date: 04/30/2010

| | | |
|---|---|---|
| **Applicant** | : Alex Pidwerbetsky | : DECISION ON REQUEST FOR |
| **Patent Number** | : 7610015 | : RECALCULATION of PATENT |
| **Issue Date** | : 10/27/2009 | : TERM ADJUSTMENT IN VIEW |
| **Application No** | : 10/955,717 | : OF WYETH AND NOTICE OF INTENT TO |
| **Filed** | : 09/30/2004 | : ISSUE CERTIFICATE OF CORRECTION |
| | | : |

The Request for Recalculation is **GRANTED** to the extent indicated.

The patent term adjustment has been determined to be **903** days. The USPTO will *sua sponte* issue a certificate of correction reflecting the amount of PTA days determined by the recalculation.

Prior to the issuance of the certificate of correction, the USPTO will afford patentee an opportunity to be heard and request reconsideration. Accordingly, patentee has **one month or thirty (30) days**, whichever is longer, to file a request for reconsideration of this patent term adjustment calculation. See 35 U.S.C. 154(b)(3)(B)(ii) and 37 CFR 1.322(a)(4). No extensions of time will be granted under 37 CFR 1.136.

Patentee should use document code PET.OP if electronically filing a request for reconsideration of this patent term adjustment calculation. The patentee must also include the information required by 37 CFR 1.705(b)(2) and the fee required by 37 CFR 1.18(e). If patentee does not file a timely request for reconsideration of this patent term adjustment calculation including the information required by 37 CFR 1.705(b)(2) and the fee required by 37 CFR 1.18(e), the USPTO will issue a certificate of correction reflecting the PTA determination noted above.

Patentee should be aware that in order to preserve the right to review in the United States District Court for the District of Columbia of the USPTO patent term adjustment determination, patentee must ensure that he or she also take the steps required under 35 U.S.C. 154(b)(4)(A) in a timely manner. Nothing in the request for recalculation should be construed as providing an alternative time frame for commencing a civil action under 35 U.S.C. 154(b)(4)(A).

Any questions concerning this decision should be directed to the Office of Patent Legal Administration at 571-272-7702.

UNITED STATES PATENT AND TRADEMARK OFFICE

Commissioner for Patents
United States Patent and Trademark Office
P.O. Box 1450
Alexandria, VA 22313-1450
www.uspto.gov

BSH HOME APPLIANCES CORPORATION
INTELLECTUAL PROPERTY DEPARTMENT
100 BOSCH BOULEVARD
NEW BERN NC 28562

COPY MAILED
NOV 03 2006
OFFICE OF PETITIONS

| | | |
|---|---|---|
| In re Application of | : | |
| Andreas BECK et al. | : | DECISION ON PETITION |
| Application No. 10/955,751 | : | UNDER 37 CFR 1.78(a)(3) |
| Filed: September 30, 2004 | : | |
| Attorney Docket No. 2002P00413WOUS | : | |

This is a decision on the petition under 37 CFR 1.78(a)(3), filed April 28, 2006, to accept an unintentionally delayed claim under 35 U.S.C. § 120 and 365(c) for the benefit of priority to prior-filed PCT Application No. PCT/EP03/04756, filed May 6, 2003, set forth in the accompanying Application Data Sheet.

The petition under 37 CFR 1.78(a)(3) is **GRANTED.**

A petition for acceptance of a claim for late priority under 37 CFR 1.78(a)(3) is only applicable to those applications filed on or after November 29, 2000. Further, the petition is appropriate only after the expiration of the period specified in 37 CFR 1.78(a)(2)(ii). In addition, the petition under 37 CFR 1.78(a)(3) must be accompanied by:

**(1)** the reference required by 35 U.S.C. § 120 and 37 CFR 1.78(a)(2)(i) of the prior-filed application, unless previously submitted;
**(2)** the surcharge set forth in § 1.17(t); and
**(3)** a statement that the entire delay between the date the claim was due under 37 CFR 1.78(a)(2)(ii) and the date the claim was filed was unintentional. The Commissioner may require additional information where there is a question whether the delay was unintentional.

All the above requirements having been satisfied, the late claim for priority under 35 U.S.C. § 120 and 365(c) is accepted as being unintentionally delayed.

***The granting of the petition to accept the delayed benefit claim to the prior-filed application under 37 CFR 1.78(a)(3) should not be construed as meaning that the application is entitled to the benefit of the prior-filed application. In order for the application to be entitled to the benefit of the prior-filed application, all other requirements under 35 U.S.C. §§ 120 and***

***365(c) and 37 CFR 1.78(a)(1) and (a)(2) must be met. Similarly, the fact that the corrected Filing Receipt accompanying this decision on petition includes the prior-filed application should not be construed as meaning that applicant is entitled to the claim for benefit of priority to the prior-filed application noted thereon. Accordingly, the examiner will, in due course, consider this benefit claim and determine whether the application is entitled to the benefit of the earlier filing date.***

A corrected Filing Receipt, which includes the priority claim to the prior-filed application, accompanies this decision on petition.

Any inquiries concerning this decision may be directed to David Bucci at (571) 272-7099. All other inquiries concerning either the examination procedures or status of the application should be directed to the Technology Center.

This application is being forwarded to the examiner of Technology Center Art Unit 3749 for appropriate action on the amendment filed April 28, 2006, including consideration of applicant's entitlement to claim benefit of priority under 35 U.S.C. § 120 and 365(c) to the above-noted, prior-filed PCT application.

David Bucci
Petitions Examiner
Office of Petitions

**ATTACHMENT**: Corrected Filing Receipt

UNITED STATES PATENT AND TRADEMARK OFFICE

UNITED STATES DEPARTMENT OF COMMERCE
United States Patent and Trademark Office
Address: COMMISSIONER FOR PATENTS
P.O. Box 1450
Alexandria, Virginia 22313-1450
www.uspto.gov

| APPL NO. | FILING OR 371 (c) DATE | ART UNIT | FIL FEE REC'D | ATTY.DOCKET NO | DRAWINGS | TOT CLMS | IND CLMS |
|---|---|---|---|---|---|---|---|
| 10/955,751 | 09/30/2004 | 3749 | 900 | 2002P00413WOUS | 1 | 9 | 1 |

**CONFIRMATION NO. 6614**

**REPLACEMENT FILING RECEIPT**

*OC000000021089213*

000046726
BSH HOME APPLIANCES CORPORATION
INTELLECTUAL PROPERTY DEPARTMENT
100 BOSCH BOULEVARD
NEW BERN, NC 28562

Date Mailed: 11/02/2006

Receipt is acknowledged of this regular Patent Application. It will be considered in its order and you will be notified as to the results of the examination. Be sure to provide the U.S. APPLICATION NUMBER, FILING DATE, NAME OF APPLICANT, and TITLE OF INVENTION when inquiring about this application. Fees transmitted by check or draft are subject to collection. Please verify the accuracy of the data presented on this receipt. **If an error is noted on this Filing Receipt, please mail to the Commissioner for Patents P.O. Box 1450 Alexandria Va 22313-1450. Please provide a copy of this Filing Receipt with the changes noted thereon. If you received a "Notice to File Missing Parts" for this application, please submit any corrections to this Filing Receipt with your reply to the Notice. When the USPTO processes the reply to the Notice, the USPTO will generate another Filing Receipt incorporating the requested corrections (if appropriate).**

**Applicant(s)**

Andreas Beck, Waldbuttelbrunn, GERMANY;
Volker Drach, Waldbuttelbrunn, GERMANY;
Hans-Peter Ebert, Dettelbach, GERMANY;

**Assignment For Published Patent Application**

BSH Bosch und Siemens Hausgerate GmbH, Munich, GERMANY

**Power of Attorney:** The patent practitioners associated with Customer Number **000046726**.

**Domestic Priority data as claimed by applicant**

This application is a CON of PCT/EP03/04756 05/06/2003

**Foreign Applications**

GERMANY DE 10220133.1 05/06/2002

**If Required, Foreign Filing License Granted:** 12/17/2004

**The country code and number of your priority application, to be used for filing abroad under the Paris Convention, is US10/955,751**

**Projected Publication Date:** Not Applicable

**Non-Publication Request:** No

**Early Publication Request:** No

**Title**

Energy-saving cooking appliance door having a low front temperature

**Preliminary Class**

126

## PROTECTING YOUR INVENTION OUTSIDE THE UNITED STATES

Since the rights granted by a U.S. patent extend only throughout the territory of the United States and have no effect in a foreign country, an inventor who wishes patent protection in another country must apply for a patent in a specific country or in regional patent offices. Applicants may wish to consider the filing of an international application under the Patent Cooperation Treaty (PCT). An international (PCT) application generally has the same effect as a regular national patent application in each PCT-member country. The PCT process **simplifies** the filing of patent applications on the same invention in member countries, but **does not result** in a grant of "an international patent" and does not eliminate the need of applicants to file additional documents and fees in countries where patent protection is desired.

Almost every country has its own patent law, and a person desiring a patent in a particular country must make an application for patent in that country in accordance with its particular laws. Since the laws of many countries differ in various respects from the patent law of the United States, applicants are advised to seek guidance from specific foreign countries to ensure that patent rights are not lost prematurely.

Applicants also are advised that in the case of inventions made in the United States, the Director of the USPTO must issue a license before applicants can apply for a patent in a foreign country. The filing of a U.S. patent application serves as a request for a foreign filing license. The application's filing receipt contains further information and guidance as to the status of applicant's license for foreign filing.

Applicants may wish to consult the USPTO booklet, "General Information Concerning Patents" (specifically, the section entitled "Treaties and Foreign Patents") for more information on timeframes and deadlines for filing foreign patent applications. The guide is available either by contacting the USPTO Contact Center at 800-786-9199, or it can be viewed on the USPTO website at http://www.uspto.gov/web/offices/pac/doc/general/index.html.

For information on preventing theft of your intellectual property (patents, trademarks and copyrights), you may wish to consult the U.S. Government website, http://www.stopfakes.gov. Part of a Department of Commerce initiative, this website includes self-help "toolkits" giving innovators guidance on how to protect intellectual property in specific countries such as China, Korea and Mexico. For questions regarding patent enforcement issues, applicants may call the U.S. Government hotline at 1-866-999-HALT (1-866-999-4158).

---

## LICENSE FOR FOREIGN FILING UNDER
## Title 35, United States Code, Section 184
## Title 37, Code of Federal Regulations, 5.11 & 5.15

**GRANTED**

The applicant has been granted a license under 35 U.S.C. 184, if the phrase "IF REQUIRED, FOREIGN FILING LICENSE GRANTED" followed by a date appears on this form. Such licenses are issued in all applications where the conditions for issuance of a license have been met, regardless of whether or not a license may be required as set forth in 37 CFR 5.15. The scope and limitations of this license are set forth in 37 CFR 5.15(a) unless an earlier license has been issued under 37 CFR 5.15(b). The license is subject to revocation upon written notification. The

date indicated is the effective date of the license, unless an earlier license of similar scope has been granted under 37 CFR 5.13 or 5.14.

This license is to be retained by the licensee and may be used at any time on or after the effective date thereof unless it is revoked. This license is automatically transferred to any related applications(s) filed under 37 CFR 1.53(d). This license is not retroactive.

The grant of a license does not in any way lessen the responsibility of a licensee for the security of the subject matter as imposed by any Government contract or the provisions of existing laws relating to espionage and the national security or the export of technical data. Licensees should apprise themselves of current regulations especially with respect to certain countries, of other agencies, particularly the Office of Defense Trade Controls, Department of State (with respect to Arms, Munitions and Implements of War (22 CFR 121-128)); the Bureau of Industry and Security, Department of Commerce (15 CFR parts 730-774); the Office of Foreign Assets Control, Department of Treasury (31 CFR Parts 500+) and the Department of Energy.

**NOT GRANTED**

No license under 35 U.S.C. 184 has been granted at this time, if the phrase "IF REQUIRED, FOREIGN FILING LICENSE GRANTED" DOES NOT appear on this form. Applicant may still petition for a license under 37 CFR 5.12, if a license is desired before the expiration of 6 months from the filing date of the application. If 6 months has lapsed from the filing date of this application and the licensee has not received any indication of a secrecy order under 35 U.S.C. 181, the licensee may foreign file the application pursuant to 37 CFR 5.15(b).

UNITED STATES PATENT AND TRADEMARK OFFICE

UNITED STATES DEPARTMENT OF COMMERCE
United States Patent and Trademark Office
Address: COMMISSIONER FOR PATENTS
P.O. Box 1450
Alexandria, Virginia 22313-1450
www.uspto.gov

Patrick G. Burns, Esq.
GREER, BURNS & CRAIN, LTD.
Suite 2500
300 South Wacker Drive
Chicago, IL 60606

Mail Date: 04/21/2010

| | | |
|---|---|---|
| **Applicant** | : Satoshi Sekido | : DECISION ON REQUEST FOR |
| **Patent Number** | : 7592994 | : RECALCULATION of PATENT |
| **Issue Date** | : 09/22/2009 | : TERM ADJUSTMENT IN VIEW |
| **Appliction No** | : 10/955,756 | : OF WYETH AND NOTICE OF INTENT TO |
| **Filed** | : 09/30/2004 | : ISSUE CERTIFICATE OF CORRECTION |
| | | : |

The Request for Recalculation is **GRANTED** to the extent indicated.

The patent term adjustment has been determined to be **1264** days. The USPTO will *sua sponte* issue a certificate of correction reflecting the amount of PTA days determined by the recalculation.

Prior to the issuance of the certificate of correction, the USPTO will afford patentee an opportunity to be heard and request reconsideration. Accordingly, patentee has **one month or thirty (30) days**, whichever is longer, to file a request for reconsideration of this patent term adjustment calculation. See 35 U.S.C. 154(b)(3)(B)(ii) and 37 CFR 1.322(a)(4). No extensions of time will be granted under 37 CFR 1.136.

Patentee should use document code PET.OP if electronically filing a request for reconsideration of this patent term adjustment calculation. The patentee must also include the information required by 37 CFR 1.705(b)(2) and the fee required by 37 CFR 1.18(e). If patentee does not file a timely request for reconsideration of this patent term adjustment calculation including the information required by 37 CFR 1.705(b)(2) and the fee required by 37 CFR 1.18(e), the USPTO will issue a certificate of correction reflecting the PTA determination noted above.

Patentee should be aware that in order to preserve the right to review in the United States District Court for the District of Columbia of the USPTO patent term adjustment determination, patentee must ensure that he or she also take the steps required under 35 U.S.C. 154(b)(4)(A) in a timely manner. Nothing in the request for recalculation should be construed as providing an alternative time frame for commencing a civil action under 35 U.S.C. 154(b)(4)(A).

Any questions concerning this decision should be directed to the Office of Patent Legal Administration at 571-272-7702.

UNITED STATES PATENT AND TRADEMARK OFFICE

Commissioner for Patents
United States Patent and Trademark Office
P.O. Box 1450
Alexandria, VA 22313-1450
www.uspto.gov

SCHNECK & SCHNECK
P.O. BOX 2-E
SAN JOSE CA 95109-0005

COPY MAILED

SEP 25 2007

OFFICE OF PETITIONS

In re Application of

SCHNOLL, Sanford E.
Application No. 10/955,785
Filed: September 29, 2004
Attorney Docket No. SSC-002

DECISION ON PETITION
TO WITHDRAW
FROM RECORD

This is a decision on the Request to Withdraw as attorney or agent of record under 37 C.F.R. § 1.36(b), filed May 16, 2007.

The request is **NOT APPROVED.**

A grantable request to withdraw as attorney/agent of record must be signed by every attorney/agent seeking to withdraw or contain a clear indication that one attorney is signing on behalf of another/others. A request to withdraw will not be approved unless at least 30 (thirty) days would remain between the date of approval and the later of the expiration date of a time to file a response or the expiration date of the maximum time period which can be extended under 37 C.F.R. § 1.136(a).

The Office cannot approve the request at this time since the reasons provided do not meet any of the conditions under the mandatory or permissive categories enumerated in 37 CFR 10.40. Section 10.40 of Title 37 of the Code of Federal Regulation states, "[a] practitioner shall not withdraw from employment in a proceeding before the Office without permission from the Office[.]" More specifically, 37 CFR 10.40 states, "[i]f paragraph (b) of this section is not applicable, a practitioner may not request permission to withdraw in matter pending before the Office unless such request or such withdrawal is" for one the permissive reasons listed in 37 CFR 10.40(c). The reasons set forth in the request "Client has died and executor wants all correspondence" does not meet any of the conditions set forth in 37 CFR 10.40.

All future communications from the Office will continue to be directed to the above-listed address until otherwise notified by applicant.

Telephone inquiries concerning this decision should be directed to the undersigned at 571-272-7253.

Monica A. Graves
Petitions Examiner
Office of Petitions

cc: SONDRA KOHN
EXECUTOR OF SANFORD E. SCHNOLL
2697 N. OCEAN BLVD. F-401
BOCA RATON, FL 33431

UNITED STATES PATENT AND TRADEMARK OFFICE

Commissioner for Patents
United States Patent and Trademark Office
P.O. Box 1450
Alexandria, VA 22313-1450
www.uspto.gov

PHILIP S. JOHNSON
JOHNSON & JOHNSON
ONE JOHNSON & JOHNSON PLAZA
NEW BRUNSWICK, NJ 08933-7003

COPY MAILED
SEP 15 2006
OFFICE OF PETITIONS

In re Application of

Macomber, et al.

Application No. 10/955,835

Filed: September 30, 2004

Attorney Docket No. COD5085

DECISION ON PETITION

This is a decision on the "Petition to Withdraw Holding of Abandonment" The petition will be treated under 37 CFR 1.181.

The petition under 37 CFR 1.181(a) to withdraw the holding of abandonment is **granted**.

This application was held abandoned on May 9, 2005, after it was believed that no response was received to the non-final Office action mailed February 8, 2005. The non-final Office action allowed a shortened statutory period for reply of three-months from its mailing date. Extensions of the time set for reply were available pursuant to 37 CFR 1.136(a). A Notice of Abandonment was mailed on September 21, 2005, indicating that a reply to Office action was not received.

The instant petition maintains that an a amendment responsive to the non-final Office action was transmitted via facsimile on July 8, 2005, with a request for an extension of time within the second month. A copy of the amendment containing a certificate of facsimile transmission dated July 8, 2005, and a copy of the auto-reply facsimile transmission sheet whereby the UPSTO acknowledged receiving eighteen pages in the above-cited application on July 8, 2005, accompanied the petition.

Based on the aforementioned, it appears that the application was improperly held abandoned as a proper response was received prior to expiration of the period for reply. The holding of abandonment is withdrawn, accordingly.

Deposit account 10-0750 will be charged $450.00 for the extension of time within the second month necessary to make the amendment timely.

The application file is being forwarded Technology Center 1600 GAU 1653, for further processing

including the consideration of the amendment first filed July 8, 2005, and in duplicate on October 18, 2005, which will be noted as having been timely received.

Kenya A. McLaughlin
Petitions Attorney
Office of Petitions

UNITED STATES PATENT AND TRADEMARK OFFICE

Commissioner for Patents
United States Patent and Trademark Office
P.O. Box 1450
Alexandria, VA 22313-1450
www.uspto.gov

MAILED

NOV 09 2009

OFFICE OF PETITIONS

WilmerHale
60 State Street
Boston MA 02109

| | | |
|---|---|---|
| In re Application of | : | |
| Rupich et al. | : | ON APPLICATION FOR PATENT |
| Application No.: 10/955866 | : | TERM ADJUSTMENT |
| Filing or 371(c) Date: 09/29/2004 | : | AND REQUEST |
| Patent Number: 7,582,328 | : | FOR RECONSIDERATION |
| Issue Date: 09/01/2009 | : | OF PATENT TERM ADJUSTMENT |
| Attorney Docket Number: | : | |
| 2802.176US2/AMSC-678 | : | |

This is a Decision on the "APPLICATION FOR PATENT TERM ADJUSTMENT AND REQUEST FOR RECONSIDERATION OF PATENT TERM ADJUSTMENT UNDER 37 C.F.R. §§ 1.702-1.705," filed July 29, 2009. Applicant submits that the correct patent term adjustment to be indicated on the patent is 1324 days, not 833 days as calculated by the Office as of the mailing of the initial determination of patent term adjustment. Applicant requests this correction based upon the basis that the Office will take in excess of three years to issue this patent. The application matured into U.S. Patent No. 7,582,328 on September 1, 2009, and is therefore properly treated under 37 C.F.R. § 1.705(d).

The Determination of Patent Term Adjustment under 35 U.S.C. 154(b), mailed June 5, 2009, indicated a patent term adjustment (PTA) to date of 833 days. The instant application for PTA was timely filed July 29, 2009 along with the issue fee. Applicants argued that the adjustment of 833 days should be increased to 1324 days. Applicants requested the increase on the grounds that the Office would fail to issue a patent within three years from the date of filing. However, prior to a decision on the merits of the application for patent term adjustment, the application matured into U.S. Patent No. 7,582,328 on September 1, 2009, with a PTA of 792 days. The PTA of 792 days included a reduction in accordance with 37 CFR 1.704(c)(10) in connection with the filing of replacement formal drawings, filed July 23, 2009. Pursuant to 37 CFR 1.704(c)(10), the reduction commenced July 23, 2009, the day the replacement formal drawings were filed, and ended on September 1, 2009, the date the patent issued. In view thereof, the patent issued with a PTA of 792 days (841 days – 49 days), subject to any terminal disclaimer.

The request for reconsideration patent term adjustment is **DISMISSED**.

Regarding Patentees request for recalculation of the patent term adjustment in view of Wyeth v. Dudas, 88 U.S.P.Q. 2d 1538 (D.D.C. 2008), Patentees request an additional adjustment under 37 C.F.R. §§ 1.702(b) and 1.703(b) for the patent Office delay in issuing the patent within three years from the date of filing. Patentees provide that the application was filed on September 29, 2004, and should have issued by September 29, 2007.

Under 37 CFR 1.703(f), patentees are entitled to a period of patent term adjustment equal to the period of delays based on the grounds set forth in 37 CFR 1.702 reduced by the period of time equal to the period of time during which patentees failed to engage in reasonable efforts to conclude prosecution pursuant to 37 CFR 1.704. In other words, patentees are entitled to the period of Office delay reduced by the period of applicant delay.

The Office asserts that as of the issuance of the patent on September 1, 2009, the application was pending three years and 703 days after its filing date. The Office agrees that the action detailed above was not taken within the specified time frame, and thus, entry of a period of adjustment of 841 days is correct. At issue is whether patentees should accrue an additional 703 days of patent term adjustment for the Office taking in excess of three years to issue the patent, as well as 841 days for Office failure to take a certain action within a specified time frame (or examination delay).

The Office contends that the period of 703 days of delay in issuance of the patent overlaps with the period of 841 days of examination delay. Patentees' calculation of the period of overlap is inconsistent with the Office's interpretation of this provision. 35 U.S.C. 154(b)(2)(A) limits the adjustment of patent term, as follows:

> To the extent that the periods of delay attributable to grounds specified in paragraph (1) overlap, the period of any adjustment granted under this subsection shall not exceed the actual number of days the issuance of the patent was delayed.

Likewise, 35 CFR 1.703(f) provides that:

> To the extent that periods of delay attributable to the grounds specified in § 1.702 overlap, the period of adjustment granted under this section shall not exceed the actual number of days the issuance of the patent was delayed.

As explained in *Explanation of 37 CFR 1.703(f) and of the United States Patent and Trademark Office Interpretation of 35 U.S.C. 154(b)(2)(A)*, 69 Fed. Reg. 34283 (June 21, 2004), the Office interprets 35 U.S.C. 154(b)(2)(A) as permitting either patent term adjustment under 35 U.S.C. 154(b)(1)(A)(i)-(iv), or patent term adjustment under 35 U.S.C. 154(b)(1)(B), but not as permitting patent term adjustment under both 35 U.S.C. 154(b)(1)(A)(i)-(iv) and 154(b)(1)(B). Accordingly, the Office implements the overlap provision as follows:

> If an application is entitled to an adjustment under 35 U.S.C. 154(b)(1)(B), the entire period during which the application was pending (except for periods excluded under 35 U.S.C. 154(b)(1)(B)(i)-(iii)), and not just the period beginning three years after the actual filing date of the application, is the period of delay under 35 U.S.C. 154(b)(1)(B) in determining whether periods of delay overlap under 35 U.S.C. 154(b)(2)(A). Thus, any days of delay for Office issuance of the patent more than 3 years after the filing date of the application, which overlap with the days of patent term adjustment accorded prior to the issuance of the patent will not result in any additional patent term adjustment. See 35 U.S.C. 154(b)(1)(B), 35 U.S.C. 154(b)(2)(A), and 37 CFR § 1.703(f). See *Changes to Implement Patent Term Adjustment Under Twenty Year Term; Final Rule*, 65 Fed. Reg.

> 56366 (Sept. 18, 2000). See also *Revision of Patent Term Extension and Patent Term Adjustment Provisions; Final Rule*, 69 Fed. Reg. 21704 (April 22, 2004), 1282 Off. Gaz. Pat. Office 100 (May 18, 2004). See also *Explanation of 37 CFR 1.703(f) and of the United States Patent and Trademark Office Interpretation of 35 U.S.C. 154(b)(2)(A)*, 69 Fed. Reg. 34283 (June 21, 2004).

The current wording of § 1.703(f) was revised in response to the misinterpretation of this provision by a number of Patentees. The rule was slightly revised to more closely track the corresponding language of 35 U.S.C. 154(b)(2)(A). The relevant portion differs only to the extent that the statute refers back to provisions of the statute whereas the rule refers back to sections of the rule. This was not a substantive change to the rule nor did it reflect a change of the Office's interpretation of 35 U.S.C. 154(b)(2)(A). As stated in the *Explanation of 37 CFR 1.703(f) and of the United States Patent and Trademark Office Interpretation of 35 U.S.C. 154(b)(2)(A)*, the Office has consistently taken the position that if an application is entitled to an adjustment under the three-year pendency provision of 35 U.S.C. 154(b)(1)(B), the entire period during which the application was pending before the Office (except for periods excluded under 35 U.S.C. 154(b)(1)(B)(i)-(iii)), and not just the period beginning three years after the actual filing date of the application, is the relevant period under 35 U.S.C. 154(b)(1)(B) in determining whether periods of delay "overlap" under 35 U.S.C. 154(b)(2)(A).

This interpretation is consistent with the statute. Taken together the statute and rule provide that to the extent that periods of delay attributable to grounds specified in 35 U.S.C. 154(b)(1) and in corresponding § 1.702 overlap, the period of adjustment granted shall not exceed the actual number of days the issuance of the patent was delayed. The grounds specified in these sections cover the A) guarantee of prompt Patent and Trademark Office responses, B) guarantee of no more than 3-year application pendency, and C) guarantee or adjustments for delays due to interference, secrecy orders and appeals. A section by section analysis of 35 U.S.C. 154(b)(2)(A) specifically provides that:

> Section 4402 imposes limitations on restoration of term. In general, pursuant to [35 U.S.C.] 154(b)(2)(A)-(C), total adjustments granted for restorations under [35 U.S.C. 154](b)(1) are reduced as follows: (1) To the extent that there are multiple grounds for extending the term of a patent that may exist simultaneously (e.g., delay due to a secrecy order under [35 U.S.C.] 181 and administrative delay under [35 U.S.C.] 154(b)(1)(A)), the term should not be extended for each ground of delay but only for the actual number of days that the issuance of a patent was delayed; See 145 Cong. Rec. S14,718[1]

As such, the period for over three-year pendency does not overlap only to the extent that the actual dates in the period beginning three years after the date on which the application was filed overlap with the actual dates in the periods for failure of the Office to take action within specified time frames. In other words, consideration of the overlap does not begin three years after the filing date of the application.

---

[1] The AIPA is title IV of the Intellectual Property and Communications Omnibus Reform Act of 1999 (S. 1948), which was incorporated and enacted as law as part of Pub. L. 106-113. The Conference Report for H.R. 3194, 106th Cong. 1st Sess. (1999), which resulted in Pub. L. 106-113, does not contain any discussion (other than the incorporated language) of S. 1948. A section-by-section analysis of S. 1948, however, was printed in the Congressional Record at the request of Senator Lott, See 145 Cong. Rec. S14,708-26 (1999)(daily ed. Nov. 17, 1999).

In this instance, the relevant period under 35 U.S.C. 154(b)(1)(B) in determining whether periods of delay "overlap" under 35 U.S.C. 154(b)(1)(A) is the entire period during which the application was pending before the Office, September 29, 2004, to the date the patent issued on September 1, 2009. Prior to the issuance of the patent, 841 days of patent term adjustment were accorded for the Office failing to respond within a specified time frame during the pendency of the application. All of the 703 days for Office delay in issuing the patent overlap with the 841 days of examination delay. During that time, the issuance of the patent was delayed by 841 days, not 703 days + 841 days. The Office took 14 months and 841 days to issue a first Office action. Otherwise, the Office took all actions set forth in 37 CFR 1.702(a) within the prescribed timeframes. Nonetheless, given the initial 841 days of Office delay and the time allowed within the time frames for processing and examination, the application issued three years and 703 days after its filing date. However, the Office did not delay 703 days and then delay an additional 841 days. Accordingly, 841 days of patent term adjustment was properly entered because the period of delay of 703 days attributable to the delay in the issuance of the patent overlaps with the adjustment of 841 days attributable to grounds specified in § 1.702(a). Entry of both periods is not warranted.

In view thereof, no adjustment to the patent term will be made.

The Office acknowledges submission of the $200.00 fee set forth in 37 CFR 1.18(e). No additional fees are required.

Telephone inquiries specific to this matter should be directed to Attorney Derek Woods, at (571) 272-3232.

*/ALESIA M. BROWN/*

Alesia M. Brown
Senior Petitions Attorney
Office of Petitions
Office of the Deputy Commissioner
for Patent Examination Policy

UNITED STATES PATENT AND TRADEMARK OFFICE

Commissioner for Patents
United States Patent and Trademark Office
P.O. Box 1450
Alexandria, VA 22313-1450
www.uspto.gov

**MAILED**

APR 2 1 2010

**OFFICE OF PETITIONS**

WilmerHale
60 State Street
Boston MA 02109

| | | |
|---|---|---|
| In re Application of | : | |
| Rupich et al. | : | ON APPLICATION FOR PATENT |
| Application No.: 10/955866 | : | TERM ADJUSTMENT |
| Filing or 371(c) Date: 09/29/2004 | : | AND REQUEST |
| Patent Number: 7,582,328 | : | FOR RECONSIDERATION |
| Issue Date: 09/01/2009 | : | OF PATENT TERM ADJUSTMENT |
| Attorney Docket Number: | : | |
| 2802.176US2/AMSC-678 | : | |

This is a decision on the renewed petition filed on January 6, 2010, which is being treated as a petition under 37 CFR 1.705(d), requesting that the patent term adjustment indicated on the above-identified patent be corrected to indicate that the term of the above-identified patent is extended or adjusted by one thousand three hundred twenty-four (1324) days.

The petition to correct the patent term adjustment indicated on the above-identified patent to indicate that the term of the above-identified patent is extended or adjusted by one thousand three hundred twenty-four (1324) days is **GRANTED to the extent indicated herein**.

As to the "B" delay, the period is 703 days. This period begins on the day after the date that is three years after the date on which the application was filed under 35 U.S.C. 111(a), September 30, 2007, and ends on September 1, 2009, the day the patent issued.

Further as to the "B" delay, the period of adjustment of 703 days is reduced to the extent that periods of delay attributable to the grounds specified in § 1.702 overlap, and the period of adjustment granted under this section shall not exceed the actual number of days the issuance of the patent was delayed. 35 U.S.C. 154(b)(2)(A), 37 CFR 1.702(f). In this instance, the period of adjustment of 841 days pursuant to 37 CFR 1.702(a)(1) overlaps with the period of adjustment pursuant to 37 CFR 1.702(b), for a period of 172 days, beginning September 30, 2007, and ending March 19, 2008. As such, the patent term adjustment is 1323, not 1324 days.

The application file does not indicate a change of address has been filed in this case, although the address given on the petition differs from the address of record. A change of address should be filed in this case in accordance with MPEP 601.03. A courtesy copy of this decision is being

mailed to the address noted on the petition. However, until otherwise instructed, all future correspondence regarding this application will be mailed solely to the address of record.

The Office acknowledges submission of the $200.00 fee set forth in 37 CFR 1.18(e). No additional fees are required.

The application is being forwarded to the Certificates of Branch for issuance of a certificate of correction. The Office will issue a certificate of correction indicating that the term of the above-identified patent is extended or adjusted by **one thousand three hundred twenty-three (1323) days.**

Telephone inquiries specific to this matter should be directed to the undersigned at (571) 272-3232.

/Derek L. Woods/

Derek L. Woods
Attorney
Office of Petitions

Enclosure: Copy of DRAFT Certificate of Correction

CC: OCCHIUTI ROHLICEK & TSAO LLP
10 FAWCETT STREET
CAMBRIDGE, MA 02138

UNITED STATES PATENT AND TRADEMARK OFFICE

# CERTIFICATE OF CORRECTION

PATENT : 7,582,328 B2

DATED : **September 1, 2009**

INVENTOR(S) : Rupich et al.

It is certified that error appears in the above-identified patent and that said Letters Patent is hereby corrected as shown below:

On the cover page,

[*] Notice: Subject to any disclaimer, the term of this patent is extended or adjusted under 35 USC 154(b) by 792 days.

Delete the phrase "by 792 days" and insert – by 1323 days--

UNITED STATES PATENT AND TRADEMARK OFFICE

UNITED STATES DEPARTMENT OF COMMERCE
United States Patent and Trademark Office
Address: COMMISSIONER FOR PATENTS
P.O. Box 1450
Alexandria, Virginia 22313-1450
www.uspto.gov

KENYON & KENYON LLP
333 W. SAN CARLOS STREET
SUITE 600
SAN JOSE, CA 95110-2731

Mail Date: 04/21/2010

| | | |
|---|---|---|
| **Applicant** | : Eitan Medina | : DECISION ON REQUEST FOR |
| **Patent Number** | : 7613116 | : RECALCULATION of PATENT |
| **Issue Date** | : 11/03/2009 | : TERM ADJUSTMENT IN VIEW |
| **Appliction No** | : 10/955,893 | : OF WYETH AND NOTICE OF INTENT TO |
| **Filed** | : 09/29/2004 | : ISSUE CERTIFICATE OF CORRECTION |
| | | : |

The Request for Recalculation is **GRANTED** to the extent indicated.

The patent term adjustment has been determined to be **977** days. The USPTO will *sua sponte* issue a certificate of correction reflecting the amount of PTA days determined by the recalculation.

Prior to the issuance of the certificate of correction, the USPTO will afford patentee an opportunity to be heard and request reconsideration. Accordingly, patentee has **one month or thirty (30) days**, whichever is longer, to file a request for reconsideration of this patent term adjustment calculation. See 35 U.S.C. 154(b)(3)(B)(ii) and 37 CFR 1.322(a)(4). No extensions of time will be granted under 37 CFR 1.136.

Patentee should use document code PET.OP if electronically filing a request for reconsideration of this patent term adjustment calculation. The patentee must also include the information required by 37 CFR 1.705(b)(2) and the fee required by 37 CFR 1.18(e). If patentee does not file a timely request for reconsideration of this patent term adjustment calculation including the information required by 37 CFR 1.705(b)(2) and the fee required by 37 CFR 1.18(e), the USPTO will issue a certificate of correction reflecting the PTA determination noted above.

Patentee should be aware that in order to preserve the right to review in the United States District Court for the District of Columbia of the USPTO patent term adjustment determination, patentee must ensure that he or she also take the steps required under 35 U.S.C. 154(b)(4)(A) in a timely manner. Nothing in the request for recalculation should be construed as providing an alternative time frame for commencing a civil action under 35 U.S.C. 154(b)(4)(A).

Any questions concerning this decision should be directed to the Office of Patent Legal Administration at 571-272-7702.

UNITED STATES PATENT AND TRADEMARK OFFICE

UNITED STATES DEPARTMENT OF COMMERCE
United States Patent and Trademark Office
Address: COMMISSIONER FOR PATENTS
P.O. Box 1450
Alexandria, Virginia 22313-1450
www.uspto.gov

Lisa K. Jorgenson, Esq.
STMicroelectronics, Inc.
1310 Electronics Drive
Carrollton, TX 75006

Mail Date: 06/04/2010

| | | |
|---|---|---|
| **Applicant** | : Kabi Prakash Padhi | : DECISION ON REQUEST FOR |
| **Patent Number** | : 7626110 | : RECALCULATION of PATENT |
| **Issue Date** | : 12/01/2009 | : TERM ADJUSTMENT IN VIEW |
| **Application No** | : 10/955,904 | : OF WYETH AND NOTICE OF INTENT TO |
| **Filed** | : 09/30/2004 | : ISSUE CERTIFICATE OF CORRECTION |
| | | : |

The Request for Recalculation is **GRANTED** to the extent indicated.

The patent term adjustment has been determined to be **1393** days. The USPTO will *sua sponte* issue a certificate of correction reflecting the amount of PTA days determined by the recalculation.

Prior to the issuance of the certificate of correction, the USPTO will afford patentee an opportunity to be heard and request reconsideration. Accordingly, patentee has **one month or thirty (30) days**, whichever is longer, to file a request for reconsideration of this patent term adjustment calculation. See 35 U.S.C. 154(b)(3)(B)(ii) and 37 CFR 1.322(a)(4). No extensions of time will be granted under 37 CFR 1.136.

Patentee should use document code PET.OP if electronically filing a request for reconsideration of this patent term adjustment calculation. The patentee must also include the information required by 37 CFR 1.705(b)(2) and the fee required by 37 CFR 1.18(e). If patentee does not file a timely request for reconsideration of this patent term adjustment calculation including the information required by 37 CFR 1.705(b)(2) and the fee required by 37 CFR 1.18(e), the USPTO will issue a certificate of correction reflecting the PTA determination noted above.

Patentee should be aware that in order to preserve the right to review in the United States District Court for the District of Columbia of the USPTO patent term adjustment determination, patentee must ensure that he or she also take the steps required under 35 U.S.C. 154(b)(4)(A) in a timely manner. Nothing in the request for recalculation should be construed as providing an alternative time frame for commencing a civil action under 35 U.S.C. 154(b)(4)(A).

Any questions concerning this decision should be directed to the Office of Patent Legal Administration at 571-272-7702.

UNITED STATES PATENT AND TRADEMARK OFFICE

Commissioner for Patents
United States Patent and Trademark Office
P.O. Box 1450
Alexandria, VA 22313-1450
www.uspto.gov

MERCHANT & GOULD (MICROSOFT)
PO BOX 2903
MINNEAPOLIS MN 55402-0903

MAILED

MAR 16 2009

OFFICE OF PETITIONS

| | | |
|---|---|---|
| In re Application of | : | |
| Leukart, et al. | : | |
| Application No. 10/955,928 | : | ON PETITION |
| Filed: September 30, 2004 | : | |
| Attorney Docket No. | : | |
| 60001.0417US01/309464.01 | | |

This is a decision on the petition to withdraw the holding of abandonment under 37 CFR 1.181, filed January 30, 2009.

The petition under 37 CFR 1.181 is **GRANTED**.

The application was held abandoned due to failure to timely file a reply to the non-final Office action, mailed June 20, 2008. This Office action set a shortened statutory period for reply of three (3) months. No reply having been received, the application became abandoned on September 21, 2008. The mailing of this decision precedes the mailing of a courtesy Notice of Abandonment.

To establish nonreceipt of an Office action, a petitioner must: 1) include a statement that the Office action was not received; 2) attest to the fact that a search of the file jacket and docket records indicates that the Office action was not received; and 3) include a copy of the docket record where the nonreceived Office action would have been entered had it been received and

docketed.[1] A proper docket report consists of a "docket record where the nonreceived Office action would have been entered had it been received and docketed."[2] "For example, if a three month period for reply was set in the nonreceived Office action, a copy of the docket record showing all replies docketed for a date three months from the mail date of the nonreceived Office action must be submitted..."[3]

With the instant petition, petitioner has submitted a copy of a master docket report, showing all of his replies docketed for the due date of September 20, 2008. An entry for the instant application is absent, supporting the conclusion that the June 20, 2008 Office action was not received.

In view thereof, the petition is granted.

The application is being forwarded to Group Art Unit 2174 for consideration of the Amendment filed with the petition on January 30, 2009.

Telephone inquiries related to this decision should be directed to the undersigned at (571)272-3207.

Cliff Congo
Petitions Attorney
Office of Petitions

---

[1] See MPEP 711.03(c)(II).

[2] MPEP 711.03(c)(II).

[3] Id.

UNITED STATES PATENT AND TRADEMARK OFFICE

Commissioner for Patents
United States Patent and Trademark Office
P.O. Box 1450
Alexandria, VA 22313-1450
www.uspto.gov

**MERCHANT & GOULD (MICROSOFT)**
**P.O. BOX 2903**
**MINNEAPOLIS MN 55402-0903**

COPY MAILED
FEB 04 2010

| | |
|---|---|
| In re Application of<br>Richard H. Leukart, et al.<br>Application No. 10/955,928<br>Filed: September 30, 2004<br>Attorney Docket No.<br>60001.0417US01/309464.01 | DECISION GRANTING PETITION<br>UNDER 37 CFR 1.313(c)(2) |

This is a decision on the petition under 37 CFR 1.313(c)(2), filed, February 4, 2010 to withdraw the above-identified application from issue after payment of the issue fee.

The petition is **GRANTED**.

The above-identified application is withdrawn from issue for consideration of a submission under 37 CFR 1.114 (request for continued examination). *See* 37 CFR 1.313(c)(2).

***Petitioner is advised that the issue fee paid on January 27, 2010 cannot be refunded. If, however, this application is again allowed, petitioner may request that it be applied towards the issue fee required by the new Notice of Allowance.***[1]

Telephone inquiries should be directed to Terri Johnson at (571) 272-2991.

This application is being referred to Technology Center AU 2174 for processing of the request for continued examination under 37 CFR 1.114 and for consideration of the concurrently filed information disclosure statement.

Terri Johnson

Terri Johnson
Petitions Examiner
Office of Petitions

---

[1] *The request to apply the issue fee to the new Notice may be satisfied by completing and returning the new Part B – Fee(s) Transmittal Form (along with any balance due at the time of submission). Petitioner is advised that the Issue Fee Transmittal Form must be completed and timely submitted to avoid abandonment of the application.*

UNITED STATES PATENT AND TRADEMARK OFFICE

Commissioner for Patents
United States Patent and Trademark Office
P.O. Box 1450
Alexandria, VA 22313-1450
www.uspto.gov

MERCHANT & GOULD (MICROSOFT)
P.O. BOX 2903
MINNEAPOLIS, MN 55402-0903

**COPY MAILED**
FEB 04 2010

In re Application of
Jesse Clay Satterfield, et al.
Application No.: 10/955,941
Filed: September 30, 2009
Attorney Docket No.: 60001.0408USU1/309409.01

ON PETITION

This is a decision on the petition, filed February 4, 2010, under 37 CFR 1.313(c)(2) to withdraw the above-identified application from issue after payment of the issue fee.

The petition is **GRANTED**.

The above-identified application is withdrawn from issue for consideration of a submission under 37 CFR 1.114 (request for continued examination). See 37 CFR 1.313(c)(2).

***Petitioner is advised that the issue fee paid on January 27, 2010, cannot be refunded. If, however, this application is again allowed, petitioner may request that it be applied towards the issue fee required by the new Notice of Allowance.***[1]

Telephone inquiries relating to this decision should be directed to the undersigned at (571) 272-3204.

The application is being referred to Technology Center AU 2174 for further processing of the request for continued examination under 37 CFR 1.114 and for consideration of the concurrently filed Information Disclosure Statement (IDS).

/SDB/

Sherry D. Brinkley
Petitions Examiner
Office of Petitions

[1] *The request to apply the issue fee to the new Notice may be satisfied by completing and returning the new Part B – Fee(s) Transmittal Form (along with any balance due at the time of submission). Petitioner is advised that the Issue Fee Transmittal Form must be completed and timely submitted to avoid abandonment of the application.*

UNITED STATES PATENT AND TRADEMARK OFFICE

Commissioner for Patents
United States Patent and Trademark Office
P.O. Box 1450
Alexandria, VA 22313-1450
www.uspto.gov

**COPY MAILED**

SEP 2 2 2009

**OFFICE OF PETITIONS**

**JOSEPH J. CRIMALDI**
**ROETZEL & ANDRESS**
**222 S. MAIN ST.**
**AKRON OH 44308**

| | | |
|---|---|---|
| In re Application of | : | |
| **YAKOBICS,** Jeff A. | : | |
| Application No. 10/955,987 | : | DECISION ON PETITION |
| Filed: September 30, 2004 | : | TO WITHDRAW |
| Attorney Docket No. **110113.0002** | : | FROM RECORD |
| | : | |

This is a decision on the Request to Withdraw as attorney or agent of record under 37 C.F.R. § 1.36(b), filed September 03, 2009.

The request is **APPROVED.**

A grantable request to withdraw as attorney/agent of record must be signed by every attorney/agent seeking to withdraw or contain a clear indication that one attorney is signing on behalf of another/others. The Office requires the practitioner(s) requesting withdrawal to certify that he, she, or they have: (1) given reasonable notice to the client, prior to the expiration of the response period, that the practitioner(s) intends to withdraw from employment; (2) delivered to the client or a duly authorized representative of the client all papers and property (including funds) to which the client is entitled; and (3) notified the client of any responses that may be due and the time frame within which the client must respond, pursuant 37 CFR 10.40(c).

The request was signed by Daniel Schlue on behalf of all attorneys of record who are associated with customer No. 39905. All attorneys/agents associated with the Customer Number 39905 have been withdrawn. Applicant is reminded that there is no attorney of record at this time.

All future correspondence will be directed to the inventor Jeff Yakobics at the address indicated below. There is an outstanding Office action mailed April 15, 2009 that requires a reply from the applicant.

Telephone inquiries concerning this decision should be directed to Tredelle Jackson at 571-272-2783.

Tredelle D. Jackson
Paralegal Specialist
Office of Petitions

cc: **DANA C/O ESTATE OF JEFF YAKOBICS**
**P.O. BOX 228**
**MARENISCO MI 49947**

UNITED STATES PATENT AND TRADEMARK OFFICE

Commissioner for Patents
United States Patent and Trademark Office
P.O. Box 1450
Alexandria, VA 22313-1450
www.uspto.gov

CHRISTENSEN, O'CONNOR, JOHNSON, KINDNESS, PLLC
1420 FIFTH AVENUE
SUITE 2800
SEATTLE WA 98101-2347

COPY MAILED

SEP 28 2009

OFFICE OF PETITIONS

| | | |
|---|---|---|
| In re Application of<br>Boulais et al.<br>Application No.: 10/956007<br>Filing or 371(c) Date: 09/30/2004<br>Patent Number: 7,578,786<br>Issue Date: 08/25/2009<br>Attorney Docket Number: BSEN123550 | :<br>:<br>:<br>:<br>:<br>:<br>: | DECISION ON REQUEST FOR RECONSIDERATION OF PATENT TERM ADJUSTMENT UNDER 37 C.F.R. 1.705 and NOTICE OF INTENT TO ISSUE CERTIFICATE OF CORRECTION |

This is a Decision on the REQUEST UNDER 37 C.F.R. § 1.705 FOR RECONSIDERATION OF PATENT TERM ADJUSTMENT DETERMINATION INDICATED IN NOTICE OF ALLOWANCE," filed June 29, 2009. Applicants submit that the correct patent term adjustment to be indicated on the patent is an additional 1015 days, not 367 days as calculated by the Office. Applicants request this correction based upon (1) an assertion that the Office erred in calculating a delay of 12 days for filing an Information Disclosure Statement ("IDS"), 12 days after filing a response to a Restriction Requirement, and (2) on the basis that the Office will take in excess of three years to issue this patent.

The Determination of Patent Term Adjustment under 35 U.S.C. 154(b), mailed March 27, 2009, indicated a patent term adjustment (PTA) to date of 367 days. The instant application for PTA was timely filed June 29, 2009 along with the issue fee. Applicants argued that the adjustment of 367 days should be increased to at least 1015 days. Applicants requested the increase on the basis that the adjustment was improperly reduced 12 days in connection with the information disclosure statement (IDS) filed November 12, 2008 and on the grounds that the Office would fail to issue a patent within three years from the date of filing. However, prior to a decision on the merits of the application for patent term adjustment, the application matured into U.S. Patent No. 7,578,786 on August 25, 2009, with a PTA of 492 days.

The Request for Reconsideration of Patent Term Adjustment is hereby **GRANTED TO THE EXTENT INDICATED HEREIN**.

Applicants assert that the Office erred in calculating a delay of 12 days for filing an Information Disclosure Statement ("IDS") 12 days after filing a response to a Restriction Requirement.

In this regard, applicants filed an IDS on November 12, 2008, 12 days after filing a response to a Restriction Requirement on October 31, 2008. The IDS, however, included a statement as required by 37 CFR 1.704(d), and no reduction of the patent term, pursuant to 37 CFR 1.704(c)(8), is warranted.

Further review of the record reveals that the Office neglected to assess a reduction of 26 days in accordance with 37 CFR 1.704(c)(10), in connection with the petition filed June 29, 2009. Accordingly, a reduction of 26 days commenced on June 29, 2009, the date the petition was filed, and ended July 24, 2009 on the mailing date of the Office action in response to the petition.

Applicants request recalculation of the patent term adjustment based upon the patent having been filed on September 30, 2004, and a projected issue date of June 27, 2009, three (3) years and 695 days later. Applicants assert an entitlement to a period of adjustment of the patent term pursuant to 35 U.S.C. § 154(b)(1)(B) and a period of adjustment of the patent term pursuant to 35 U.S.C. § 154(b)(1)(A), to the extent that these periods do not overlap. However, in effect, applicants contend that no portion of the Three Year Delay period overlaps with the period of examination delay. Thus, applicants contend, the patent term adjustment should be at least an additional 636 days, based upon the projected issue date of June 27, 2009.

Under 37 CFR 1.703(f), patentees are entitled to a period of patent term adjustment equal to the period of delays based on the grounds set forth in 37 CFR 1.702 reduced by the period of time equal to the period of time during which patentees failed to engage in reasonable efforts to conclude prosecution pursuant to 37 CFR 1.704. In other words, patentees are entitled to the period of Office delay reduced by the period of applicant delay.

The Office asserts that as of the issuance of the patent on August 25, 2009, the application was pending three years and 695 days after its filing date. The Office asserts that certain action was not taken within the specified time frame, and thus, the entry of a period of adjustment of 568 days is correct. At issue is whether applicants should accrue 695 days of patent term adjustment for the Office taking in excess of three years to issue the patent, as well as 568 days for Office failure to take a certain action within a specified time frame (or examination delay).

The Office contends that the 568 days of examination delay overlap with the 695 days of delay in issuance of the patent. Applicants' calculation of the period of overlap is inconsistent with the Office's interpretation of this provision. 35 U.S.C. 154(b)(2)(A) limits the adjustment of patent term, as follows:

> To the extent that the periods of delay attributable to grounds specified in paragraph (1) overlap, the period of any adjustment granted under this subsection shall not exceed the actual number of days the issuance of the patent was delayed.

Likewise, 35 CFR 1.703(f) provides that:

> To the extent that periods of delay attributable to the grounds specified in § 1.702 overlap, the period of adjustment granted under this section shall not exceed the actual number of days the issuance of the patent was delayed.

As explained in *Explanation of 37 CFR 1.703(f) and of the United States Patent and Trademark Office Interpretation of 35 U.S.C. 154(b)(2)(A)*, 69 Fed. Reg. 34283 (June 21, 2004), the Office interprets 35 U.S.C. 154(b)(2)(A) as permitting either patent term adjustment under 35 U.S.C. 154(b)(1)(A)(i)-(iv), or patent term adjustment under 35 U.S.C. 154(b)(1)(B), but not as permitting patent term adjustment under both 35 U.S.C. 154(b)(1)(A)(i)-(iv) and 154(b)(1)(B). Accordingly, the Office implements the overlap provision as follows:

> If an application is entitled to an adjustment under 35 U.S.C. 154(b)(1)(B), the entire period during which the application was pending (except for periods excluded under 35 U.S.C. 154(b)(1)(B)(i)-(iii)), and not just the period beginning three years after the actual filing date of the application, is the period of delay under 35 U.S.C. 154(b)(1)(B) in determining whether periods of delay overlap under 35 U.S.C. 154(b)(2)(A). Thus, any days of delay for Office issuance of the patent more than 3 years after the filing date of the application, which overlap with the days of patent term adjustment accorded prior to the issuance of the patent will not result in any additional patent term adjustment. See 35 U.S.C. 154(b)(1)(B), 35 U.S.C. 154(b)(2)(A), and 37 CFR § 1.703(f). See *Changes to Implement Patent Term Adjustment Under Twenty Year Term; Final Rule*, 65 Fed. Reg. 56366 (Sept. 18, 2000). See also *Revision of Patent Term Extension and Patent Term Adjustment Provisions; Final Rule*, 69 Fed. Reg. 21704 (April 22, 2004), 1282 Off. Gaz. Pat. Office 100 (May 18, 2004). See also *Explanation of 37 CFR 1.703(f) and of the United States Patent and Trademark Office Interpretation of 35 U.S.C. 154(b)(2)(A),* 69 Fed. Reg. 34283 (June 21, 2004).

The current wording of § 1.703(f) was revised in response to the misinterpretation of this provision by a number of Patentees. The rule was slightly revised to more closely track the corresponding language of 35 U.S.C. 154(b)(2)(A). The relevant portion differs only to the extent that the statute refers back to provisions of the statute whereas the rule refers back to sections of the rule. This was not a substantive change to the rule nor did it reflect a change of the Office's interpretation of 35 U.S.C. 154(b)(2)(A). As stated in the *Explanation of 37 CFR 1.703(f) and of the United States Patent and Trademark Office Interpretation of 35 U.S.C. 154(b)(2)(A)*, the Office has consistently taken the position that if an application is entitled to an adjustment under the three-year pendency provision of 35 U.S.C. 154(b)(1)(B), the entire period during which the application was pending before the Office (except for periods excluded under 35 U.S.C. 154(b)(1)(B)(i)-(iii)), and not just the period beginning three years after the actual filing date of the application, is the relevant period under 35 U.S.C. 154(b)(1)(B) in determining whether periods of delay "overlap" under 35 U.S.C. 154(b)(2)(A).

This interpretation is consistent with the statute. Taken together the statute and rule provide that to the extent that periods of delay attributable to grounds specified in 35 U.S.C. 154(b)(1) and in corresponding § 1.702 overlap, the period of adjustment granted shall not exceed the actual number of days the issuance of the patent was delayed. The grounds specified in these sections cover the A) guarantee of prompt Patent and Trademark Office responses, B) guarantee of no more than 3-year application pendency, and C) guarantee or adjustments for delays due to interference, secrecy orders and appeals. A section by section analysis of 35 U.S.C. 154(b)(2)(A) specifically provides that:

> Section 4402 imposes limitations on restoration of term. In general, pursuant to [35 U.S.C.] 154(b)(2)(A)-(C), total adjustments granted for restorations under [35 U.S.C. 154](b)(1) are reduced as follows: (1) To the extent that there are multiple grounds for extending the term of a patent that may exist simultaneously (e.g., delay due to a secrecy order under [35 U.S.C.] 181 and administrative delay under [35 U.S.C.] 154(b)(1)(A)), the term should not be extended for each ground of delay but only for the actual number of days that the issuance of a patent was delayed; See 145 Cong. Rec. S14,718[1]

As such, the period for over three-year pendency does not overlap only to the extent that the actual dates in the period beginning three years after the date on which the application was filed overlap with the actual dates in the periods for failure of the Office to take action within specified time frames. In other words, consideration of the overlap does not begin three years after the filing date of the application.

In this instance, the relevant period under 35 U.S.C. 154(b)(1)(B) in determining whether periods of delay "overlap" under 35 U.S.C. 154(b)(2)(A) is the entire period during which the application was pending before the Office, September 30, 2004, to the date the patent issued on August 25, 2009. Prior to the issuance of the patent, 568 days of patent term adjustment were accorded for the Office failing to respond within a specified time frame during the pendency of the application. The 568 days of examination delay overlap with the 695 days for Office delay in issuing the patent. During that time, the issuance of the patent was delayed by 695 days, not 695 days + 568 days. The Office took 14 months and 568 days to issue a first Office action. Otherwise, the Office took all actions set forth in 37 CFR 1.702(a) within the prescribed timeframes. Nonetheless, given the initial 568 days of Office delay and the time allowed within the time frames for processing and examination, the application issued three years and 695 days after its filing date. The Office did not delay 568 days and also delay an additional 695 days. Accordingly, 695 days of patent term adjustment was properly entered because the adjustment of 568 days attributable to grounds specified in § 1.702(a) overlaps with the period of delay of 695 days attributable to the delay in the issuance of the patent.

Accordingly, at issuance, the Office entered 695 days of patent term adjustment, the actual period of delay in issuance of the patent.

The petition is granted to the extent that the Office erred in assessing a reduction of 12 days pursuant to 37 CFR 1.704(c)(8).

In view thereof, at the time of issuance, the patent was entitled to 478 days of patent term adjustment 478 days (568 days + 127 days – 217 days).

The application file is being forwarded to the Certificates of Correction Branch for issuance of a certificate of correction in order to rectify the error noted *supra*. The Office will issue a

---

[1] The AIPA is title IV of the Intellectual Property and Communications Omnibus Reform Act of 1999 (S. 1948), which was incorporated and enacted as law as part of Pub. L. 106-113. The Conference Report for H.R. 3194, 106th Cong. 1st Sess. (1999), which resulted in Pub. L. 106-113, does not contain any discussion (other than the incorporated language) of S. 1948. A section-by-section analysis of S. 1948, however, was printed in the Congressional Record at the request of Senator Lott, See 145 Cong. Rec. S14,708-26 (1999)(daily ed. Nov. 17, 1999).

certificate of correction indicating that the term of the above-identified patent is extended or adjusted by **FOUR HUNDRED SEVENTY-EIGHT (478) DAYS**.

Any request for reconsideration of this decision must be submitted within ONE MONTH of the mail date indicated herein. The time period for seeking reconsideration is not subject to extension under 37 CFR 1.136.

The Office acknowledges submission of the $200.00 fee set forth in 37 CFR 1.18(e). No additional fees are required.

Telephone inquiries specific to this matter should be directed to Attorney Derek Woods, at (571) 272-3232.

Alesia Brown
Senior Petitions Attorney
Office of Petitions
Office of the Deputy Commissioner
for Patent Examination Policy

Enclosure: Copy of DRAFT Certificate of Correction

UNITED STATES PATENT AND TRADEMARK OFFICE

# CERTIFICATE OF CORRECTION

PATENT : 7,578,786 B2

DATED : August 25, 2009

INVENTOR(S) : Boulais et al.

It is certified that error appears in the above-identified patent and that said Letters Patent is hereby corrected as shown below:

On the cover page,

[*] Notice: Subject to any disclaimer, the term of this patent is extended or adjusted under 35 USC 154(b) by (492) days.

Delete the phrase "by 492 days" and insert – by 478 days--

SPE RESPONSE FOR CERTIFICATE OF CORRECTION

Paper No.: _____

DATE : 01/16/09

TO SPE OF : ART UNIT 2624

SUBJECT : Request for Certificate of Correction for Appl. No.: 10956020 Patent No.: 7366355 B2

Please respond to this request for a certificate of correction within 7 days.

FOR IFW FILES:

Please review the requested changes/corrections as shown in the COCIN document(s) in the IFW application image. No new matter should be introduced, nor should the scope or meaning of the claims be changed.

Please complete the response (see below) and forward the completed response to scanning using document code COCX.

FOR PAPER FILES:

Please review the requested changes/corrections as shown in the attached certificate of correction. Please complete this form (see below) and forward it with the file to:

Certificates of Correction Branch (CofC)
South Tower - 9A22
Palm Location 7580

You can fax the Directors/SPE response to 571-270-9990

_____
Certificates of Correction Branch

703-308-9390 ext. _____

Thank You For Your Assistance

The request for issuing the above-identified correction(s) is hereby:
Note your decision on the appropriate box.

- ☒ Approved — All changes apply.
- ☐ Approved in Part — Specify below which changes do not apply.
- ☐ Denied — State the reasons for denial below.

Comments: _____

/Brian P. Werner/ SPE, Art Unit 2624 1/21/2009

SPE RESPONSE FOR CERTIFICATE OF CORRECTION

SPE Art Unit

UNITED STATES PATENT AND TRADEMARK OFFICE

COMMISSIONER FOR PATENTS
UNITED STATES PATENT AND TRADEMARK OFFICE
P.O. BOX 1450
ALEXANDRIA, VA 22313-1450
www.uspto.gov

FINNEGAN, HENDERSON, FARABOW, GARRETT & DUNNER
LLP
901 NEW YORK AVENUE, NW
WASHINGTON DC 20001-4413

COPY MAILED

MAY 23 2006

OFFICE OF PETITIONS

Applicant: Olivier
Appl. No.: 10/956,041
Filing Date: August 6, 2004
Title: WASTE WATER TREATMENT SYSTEM AND PROCESS
Attorney Docket No.: 08048.0054
Pub. No.: US 2005/0109697 A1
Pub. Date: May 26, 2005

This is a decision on the request for a corrected patent application publication under 37 CFR 1.221(b), filed on July 26, 2005, for the above-identified application

The request is DISMISSED.

Applicant requests that the application be republished because the patent application publication contains a material error in paragraph [0091] in the last sentence wherein "$\phi_2$ ranges from 0° to 50° and more preferably form 10° to 20°" is misprinted as wherein "$\phi_2$ ranges from 0° to 500 and more preferably form 10° to 20°."

37 CFR 1.221 (b) is applicable "only when the Office makes a material mistake which is apparent from Office records.... Any request for a corrected publication or revised patent application publication other than provided as provided in paragraph (a) of this section must be filed within two months from the date of the patent application publication. This period is not extendable." A material mistake must affect the public's ability to appreciate the technical disclosure of the patent application publication, to determine the scope of the patent application publication, or to determine the scope of the provisional rights that an applicant may seek to enforce upon issuance of a patent. [1]

The error noted by requestor wherein "$\phi_2$ ranges from 0° to 50° and more preferably form 10° to 20°" is misprinted as wherein "$\phi_2$ ranges from 0° to 500 and more preferably form 10° to 20°" is an Office error but the mistake is not a material error under 37 CFR 1.221(b). The error is a minor typographical error, which is clearly understandable to one of ordinary skill in the art in reading the paragraph, as $\phi_2$ relates to an angle, which is described in the paragraph and shown

[1] Changes to Implement Eighteen-Month Publication of Patent Applications, 65 FR 57023, 57038 (Sept. 20, 2000), 1239, Off. Gaz. Pat. Office Notices 63, 75 (Oct. 10, 2000) (final rule).

in Figure 2. The mistake is a minor typographical, which does not affect the understanding of the application, as the text of specification and the claims is clearly understandable from reading the specification, as the misprinted and misplaced numeral does not affect the understanding of the application. The mistake does not affect the public's ability to appreciate the technical disclosure of the patent application publication, or determine the scope of the patent application publication or determine the scope of the provisional rights that an applicant may seek to enforce upon issuance of a patent.

The applicant is advised that a "request for republication of an application previously published" may be filed under 37 CFR 1.221 (a). Such a request for republication "must include a copy of the application compliance with the Office's electronic filing system requirements and be accompanied by the publication fee set forth in § 1.18 (d) and the processing fee set forth in § 1.17 (i)." If the request for republication does not comply with the electronic filing system requirements, the republication will not take place and the publication fee set forth in § 1.18 (d) will be refunded. The processing fee will be retained.

Any request for republication under 37 CFR 1.221(a), must be submitted via the EFS system and questions or request for reconsideration of the decision, should be addressed as follows:

By mail to: Mail Stop PGPUB
Commissioner for Patents
P.O. Box 1450
Alexandria, Va. 22313-1450

By facsimile: 571-273-8300

Inquiries relating to this matter may be directed to Mark Polutta at (571) 272-7709 (voice).

Mark Polutta
Senior Legal Advisor
Office of Patent Legal Administration
Office of the Deputy Commissioner
for Patent Examination Policy

# UNITED STATES PATENT AND TRADEMARK OFFICE

UNITED STATES DEPARTMENT OF COMMERCE
United States Patent and Trademark Office
Address: COMMISSIONER FOR PATENTS
P.O. Box 1450
Alexandria, Virginia 22313-1450
www.uspto.gov

| APPLICATION NO. | FILING DATE | FIRST NAMED INVENTOR | ATTORNEY DOCKET NO. | CONFIRMATION NO. |
|---|---|---|---|---|
| 10/956,051 | 10/04/2004 | Katsuhisa Yamazaki | 02910.103296. | 6797 |

5514 7590 06/10/2009
FITZPATRICK CELLA HARPER & SCINTO
30 ROCKEFELLER PLAZA
NEW YORK, NY 10112

| EXAMINER |
|---|
| LE, HOA VAN |

| ART UNIT | PAPER NUMBER |
|---|---|
| 1795 | |

| MAIL DATE | DELIVERY MODE |
|---|---|
| 06/10/2009 | PAPER |

**Please find below and/or attached an Office communication concerning this application or proceeding.**

The time period for reply, if any, is set in the attached communication.

UNITED STATES PATENT AND TRADEMARK OFFICE

Commissioner for Patents
United States Patent and Trademark Office
P.O. Box 1450
Alexandria, VA 22313-1450
www.uspto.gov

JUN 10 2009

mbc

| | | |
|---|---|---|
| In re application of | Yamazaki et al. | :DECISION ON |
| Serial no. | 10/956,051 | :PETITION |
| Filed: | October 4, 2004 | : |
| For: | TONER | : |

This is a decision on the PETITION FILED UNDER 37 CFR 1.181 TO WITHDRAW THE FINAL OFFICE ACTION mailed February 10, 2009.

On February 10, 2009, the examiner made a final rejection of all pending claims.

On March 17, 2009, applicant filed the instant petition under 37 CFR 1.181 for 1) the withdrawal of the final rejection mailed February 10, 2009 and 2) the reassignment of the application to a different examiner. Applicant's position for the withdrawal of the final rejection is that the action does not use proper grammar or syntax and may be indecipherable. Petitioner cites several passages of the action that are purported to be indecipherable.

DECISION

MPEP 707.07(d) states in part:
*Where a claim is refused for any reason relating to the merits thereof it should be "rejected" and the ground of rejection fully and clearly stated, and the word "reject" must be used.*

The ground of rejection is not clearly stated. Accordingly, the petition for withdrawal of the final rejection is **GRANTED**.

MPEP 903.08(e) states in part:
*The assignment of nonprovisional applications follows, as far as possible, the rules or principles governing the classification of patents. Applications are generally assigned on the basis of where the application would have an original classification, if the claims it contains were in a patent.*

Applications are assigned based on the classification. There is no record or argument of any indication of bias or impropriety that would override the benefit of assigning the application to

the examiner with the appropriate technical expertise and the examiner's familiarity with the substantive issues in the application.

Accordingly, the petition for reassignment of the application to a different examiner is **DISMISSED**.

FURTHER ACTION
The examiner will issue a new non-final office action clearly stating the grounds of rejection and using proper grammar and syntax.

/Gregory L Mills/
Gregory Mills, Acting Director
Technology Center 1700
Chemical and Materials Engineering

Peter Saxon
FITZPATRICK, CELLA, HARPER & SCINTO
30 Rockefeller Plaza
New York, NY 10112-3801

UNITED STATES PATENT AND TRADEMARK OFFICE

UNITED STATES DEPARTMENT OF COMMERCE
United States Patent and Trademark Office
Address: COMMISSIONER FOR PATENTS
P.O. Box 1450
Alexandria, Virginia 22313-1450
www.uspto.gov

| APPLICATION NO. | FILING DATE | FIRST NAMED INVENTOR | ATTORNEY DOCKET NO. | CONFIRMATION NO. |
|---|---|---|---|---|
| 10/956,095 | 10/04/2004 | Charles Emory Hughes II | 09-0066 | 9009 |

22191 7590 01/13/2010
GREENBERG TRAURIG, LLP (DC/ORL)
2101 L Street, N.W.
Suite 1000
Washington, DC 20037

| EXAMINER |
|---|
| LAO, LUN S |

| ART UNIT | PAPER NUMBER |
|---|---|
| 2614 | |

| NOTIFICATION DATE | DELIVERY MODE |
|---|---|
| 01/13/2010 | ELECTRONIC |

**Please find below and/or attached an Office communication concerning this application or proceeding.**

The time period for reply, if any, is set in the attached communication.

Notice of the Office communication was sent electronically on above-indicated "Notification Date" to the following e-mail address(es):

DCIPMAIL@gtlaw.com
SANTOSV@gtlaw.com

UNITED STATES PATENT AND TRADEMARK OFFICE

Commissioner for Patents
United States Patent and Trademark Office
P.O. Box 1450
Alexandria, VA 22313-1450
www.uspto.gov

GREENBERG TRAURIG, LLP (DC/ORL)
2101 L Street, N.W.
Suite 1000
Washington DC 20037

*In re* Application of
HUGHES, CHARLES EMORY II. et al
Appl. No.: 10/956,095
Filed: October 4, 2004
For: **DIPOLE AND MONOPOLE SURROUND SOUND SPEAKER SYSTEM**

**DECISION ON PETITION**

This is a decision on the petition filed October 19, 2009, to expunge information erroneously submitted in the above identified application.

Petitioner asserts the following:
1. The documents submitted on October 19, 2009 via EFS-Web include the following: 09-0081_OAresponse.pdf- Documents intended for patent application US No. 11/244,928 as indicated in the sheet headers. Submitted under the category "Amendment/Req. Reconsideration-After Non-Final Reject."; Fee Worksheet (PTO-875) - Electronic Patent Application Fee Transmittal for extension fees ($490) in connection with documents intended for US No 11/244,928; Electronic submission receipt: EFS ID: 6284324, Time Stamp: 13:51:11
2. The submission of these documents was unintentionally submitted in the incorrect application file.
3. The documents do not form any part of the original disclosure.

A review of the file finds that the Response filed October 19, 2009 was improperly matched to the instant application.

Accordingly, the petition is **GRANTED**.

The Response filed October 19, 2009 along with the Fee Worksheet (PTO-875) and EFS Receipt in connection with this document for US Serial Number 11/244,928 have been removed (e.g. closed) from the electronic file wrapper for the instant application and transferred to the correct application. The application has been forwarded to the examiner for action on the merits in due course.

/Doris To/

Doris To
Quality Assurance Specialist
Technology Center 2600
Communications

D.26

UNITED STATES PATENT AND TRADEMARK OFFICE

Commissioner for Patents
United States Patent and Trademark Office
P.O. Box 1450
Alexandria, VA 22313-1450
www.uspto.gov

STAAS & HALSEY LLP
SUITE 700
1201 NEW YORK AVENUE, N.W.
WASHINGTON DC 20005

COPY MAILED
NOV 1 6 2006
OFFICE OF PETITIONS

In re Application of Sugaya et al. :
Application No. 10/956,107 : Decision on Petition
Filing Date: October 4, 2004 :
Attorney Docket No. 614.1746D2C2CDD :

This is a decision on the petition under 37 CFR 1.181, filed August 9, 2006, to withdraw the holding of abandonment.

The petition is **granted.**

The Office mailed a Notice of Allowance and Notice of Allowability on April 11, 2006. The Notices set a statutory period for reply of three (3) months. The Office did not receive a reply.

Petitioner contends the application is not abandoned.

Petitioner has established non-receipt of the Notices mailed April 11, 2006. Therefore, the Notice of Abandonment is hereby vacated and the holding of abandonment withdrawn.

Technology Center Art Unit 3663 will be informed of the instant decision. The IDS filed April 17, 2006, will be entered and considered in due course. If appropriate, a new Notice of Allowance and new Notice of Allowability will be mailed thereafter. The time period for responding to the new Notices will be set to run from the mailing date of the new Notices.

Telephone inquiries regarding this communication should be directed to Petitions Attorney Steven Brantley at (571) 272-3203.

Charles Steven Brantley
Senior Petitions Attorney
Office of Petitions

# UNITED STATES PATENT AND TRADEMARK OFFICE

UNITED STATES DEPARTMENT OF COMMERCE
United States Patent and Trademark Office
Address: COMMISSIONER FOR PATENTS
P.O. Box 1450
Alexandria, Virginia 22313-1450
www.uspto.gov

| APPLICATION NO. | FILING DATE | FIRST NAMED INVENTOR | ATTORNEY DOCKET NO. | CONFIRMATION NO. |
|---|---|---|---|---|
| 10/956,131 | 10/04/2004 | Tracy Harmon Blumenfeld | 114478-00104 | 8925 |

27557 7590 04/26/2010
BLANK ROME LLP
WATERGATE
600 NEW HAMPSHIRE AVENUE, N.W.
WASHINGTON, DC 20037

| EXAMINER |
|---|
| MOBIN, HASANUL |

| ART UNIT | PAPER NUMBER |
|---|---|
| 2168 | |

| MAIL DATE | DELIVERY MODE |
|---|---|
| 04/26/2010 | PAPER |

**Please find below and/or attached an Office communication concerning this application or proceeding.**

The time period for reply, if any, is set in the attached communication.

UNITED STATES PATENT AND TRADEMARK OFFICE

COMMISSIONER FOR PATENTS
UNITED STATES PATENT AND TRADEMARK OFFICE
P.O. BOX 1450
ALEXANDRIA, VA 22313-1450
www.uspto.gov

BLANK ROME LLP
Watergate
600 New Hampshire Avenue, N.W.
Washington, DC 20037

In re Application of:
Tracy Harmon BLUMENFELD
Application No. 10/956,131
Filed: 04 October, 2004
For: ONLINE, INTERACTIVE EVALUATION OF RESEARCH PERFORMANCE

DECISION ON PETITION TO MAKE SPECIAL

This is a decision on the petition, filed on 04 October 2004, under 37 C.F.R. §102(d) and M.P.E.P. § 708.02(VIII): Accelerated Examination, to make the above-identified application special.

The petition is **GRANTED**.

M.P.E.P. § 708.02, Section VIII which sets out the prerequisites for a grantable petition for Accelerated Examination under 37 C.F.R. § 102(d) states in relevant part:

> A new application (one which has not received any examination by the examiner) may be granted special status provided that applicant (and this term includes applicant's attorney or agent) complies with each of the following items:
>
> (A) Submits a petition to make special accompanied by the fee set forth in 37 CFR 1.17(h);
>
> (B) Presents all claims directed to a single invention, or if the Office determines that all the claims presented are not obviously directed to a single invention, will make an election without traverse as a prerequisite to the grant of special status;
>
> (C) Submits a statement(s) that a pre-examination search was made, listing the field of search by class and subclass, publication, Chemical Abstracts, foreign patents, etc. A search made by a foreign patent office satisfies this requirement;
>
> (D) Submits one copy each of the references deemed most closely related to the subject matter encompassed by the claims if said references are not already of record; and
>
> (E) Submits a detailed discussion of the references, which discussion points out, with the particularity required by 37 CFR 1.111 (b) and (c), how the claimed subject matter is patentable over the references.

Applicant's submission of 04 October 2004 meets all the criteria set out above. Accordingly, the petition is **GRANTED**. The application file is being recorded for

accelerated examination in accordance with M.P.E.P. § 708.02. If the application is subsequently allowed, it will be given priority for printing. See M.P.E.P. § 1309.

*/Vincent N. Trans/*
Vincent N. Trans, SPRE/QAS
Technology Center 2100
Computer Architecture and Software
571-272-3613

UNITED STATES PATENT AND TRADEMARK OFFICE

UNITED STATES DEPARTMENT OF COMMERCE
United States Patent and Trademark Office
Address: COMMISSIONER FOR PATENTS
P.O. Box 1450
Alexandria, Virginia 22313-1450
www.uspto.gov

THE WEBB LAW FIRM, P.C.
700 KOPPERS BUILDING
436 SEVENTH AVENUE
PITTSBURGH, PA 15219

Mail Date: 04/28/2010

| | | |
|---|---|---|
| **Applicant** | : Muhammad A. Afzal | : DECISION ON REQUEST FOR |
| **Patent Number** | : 7653180 | : RECALCULATION of PATENT |
| **Issue Date** | : 01/26/2010 | : TERM ADJUSTMENT IN VIEW |
| **Application No** | : 10/956,170 | : OF WYETH AND NOTICE OF INTENT TO |
| **Filed** | : 10/01/2004 | : ISSUE CERTIFICATE OF CORRECTION |
| | | : |

The Request for Recalculation is **GRANTED** to the extent indicated.

The patent term adjustment has been determined to be **1005** days. The USPTO will *sua sponte* issue a certificate of correction reflecting the amount of PTA days determined by the recalculation.

Prior to the issuance of the certificate of correction, the USPTO will afford patentee an opportunity to be heard and request reconsideration. Accordingly, patentee has **one month or thirty (30) days**, whichever is longer, to file a request for reconsideration of this patent term adjustment calculation. See 35 U.S.C. 154(b)(3)(B)(ii) and 37 CFR 1.322(a)(4). No extensions of time will be granted under 37 CFR 1.136.

Patentee should use document code PET.OP if electronically filing a request for reconsideration of this patent term adjustment calculation. The patentee must also include the information required by 37 CFR 1.705(b)(2) and the fee required by 37 CFR 1.18(e). If patentee does not file a timely request for reconsideration of this patent term adjustment calculation including the information required by 37 CFR 1.705(b)(2) and the fee required by 37 CFR 1.18(e), the USPTO will issue a certificate of correction reflecting the PTA determination noted above.

Patentee should be aware that in order to preserve the right to review in the United States District Court for the District of Columbia of the USPTO patent term adjustment determination, patentee must ensure that he or she also take the steps required under 35 U.S.C. 154(b)(4)(A) in a timely manner. Nothing in the request for recalculation should be construed as providing an alternative time frame for commencing a civil action under 35 U.S.C. 154(b)(4)(A).

Any questions concerning this decision should be directed to the Office of Patent Legal Administration at 571-272-7702.

UNITED STATES PATENT AND TRADEMARK OFFICE

Commissioner for Patents
United States Patent and Trademark Office
P.O. Box 1450
Alexandria, VA 22313-1450
www.uspto.gov

COPY MAILED

AUG 03 2009

OFFICE OF PETITIONS

**INTEL/BSTZ**
**BLAKELY SOKOLOFF TAYLOR & ZAFMAN LLP**
**1279 OAKMEAD PARKWAY**
**SUNNYVALE CA 94085-4040**

| | | |
|---|---|---|
| In re Application of | : | |
| Ravi RAJWAR et al. | : | |
| Application No. 10/956,178 | : | DECISION ON PETITION |
| Filed: September 30, 2004 | : | |
| Attorney Docket No. 42P20169 | : | |

This is a decision on the petition under the unintentional provisions of 37 CFR 1.137(b), filed July 06, 2009, to revive the above-identified application.

The petition is **GRANTED**.

The application became abandoned for failure to timely file a reply within the meaning of 37 CFR 1.113 to the final Office action of October 16, 2008, which set a shortened statutory period for reply of three (3) months. No extensions of time under the provisions of 37 CFR 1.136(a) were obtained. The proposed reply required for consideration of a petition to revive must be a Notice of Appeal (and appeal fee required by 37 CFR 41.20(b)(2)), an amendment that *prima facie* places the application in condition for allowance, a Request for Continued Examination (RCE) and submission (37 CFR 1.114), or the filing of a continuing application under 37 CFR 1.53(b). *See* MPEP 711.03(c)(III)(A)(2). Since the amendment submitted does not *prima facie* place the application in condition for allowance, the reply required must be a Notice of Appeal (and appeal fee), RCE, or the filing of a continuing application under 37 CFR 1.53(b). Accordingly, the application became abandoned on January 17, 2009.

The petition satisfies the requirements of 37 CFR 1.137(b) in that petitioner has supplied (1) the reply in the form of a Request for Continued Examination (RCE) and fee of $810.00, and the submission required by 37 CFR 1.114; (2) the petition fee of $1620.00; and (3) a proper statement of unintentional delay. Accordingly, the reply to the final Office action of October 16, 2008 is accepted as having been unintentionally delayed.

Telephone inquiries concerning this decision should be directed to the undersigned at (571) 272-4231.

This application is being referred to Technology Center AU 2186 for processing of the RCE and for appropriate action by the Examiner in the normal course of business on the amendment submitted in accordance with 37 CFR 1.114.

Michelle R. Eason

Michelle R. Eason
Paralegal Specialist
Office of Petition

UNITED STATES PATENT AND TRADEMARK OFFICE

Commissioner for Patents
United States Patent and Trademark Office
P.O. Box 1450
Alexandria, VA 22313-1450
www.uspto.gov
DIW Jul-08

RUTAN & TUCKER, LLP.
611 ANTON BLVD
SUITE 1400
COSTA MESA CA 92626

**COPY MAILED**

JUL 24 2008

**OFFICE OF PETITIONS**

| | | |
|---|---|---|
| In re Application of | : | |
| Fiello et al. | : | |
| Application Number: 10/956183 | : | ON PETITION |
| Filing Date: 09/30/2004 | : | |
| Attorney Docket Number: 101525-0006P | : | |

This is a decision on the petition filed on May 22, 2008, under 37 CFR 1.137(a),[1] to revive the above-identified application.

The petition is **dismissed**.

Any request for reconsideration of this decision must be submitted within **TWO (2) MONTHS** from the mail date of this decision. Extensions of time under 37 CFR 1.136(a) are permitted. The reconsideration request should include a cover letter entitled "Renewed Petition under 37 CFR 1.137(a)" or, as discussed below, "Petition under 37 CFR 1.137(b)."

The application became abandoned on May 15, 2008, for failure to timely submit the issue and publication fees as required by the Notice of Allowance and Fee(s) Due mailed on February 14, 2008,

---

[1] A grantable petition under 37 CFR 1.137(a) must be accompanied by:

(1) the required reply, unless previously filed; In a nonprovisional application abandoned for failure to prosecute, the required reply may be met by the filing of a continuing application. In a nonprovisional utility or plant application filed on or after June 8, 1995, and abandoned for failure to prosecute, the required reply may also be met by the filing of a request for continued examination in compliance with § 1.114. In an application or patent, abandoned or lapsed for failure to pay the issue fee or any portion thereof, the required reply must be the payment of the issue fee or any outstanding balance thereof. In an application, abandoned for failure to pay the publication fee, the required reply must include payment of the publication fee.

(2) the petition fee as set forth in 37 CFR 1.17(l);

(3) a showing to the satisfaction of the Director that the entire delay in filing the required reply from the due date for the reply until the filing of a grantable petition pursuant to 37 CFR 1.137(a) was unavoidable; and

(4) any terminal disclaimer (and fee as set forth in 37 CFR 1.20(d)) required pursuant to 37 CFR 1.137(c)).

which set a three (3)-month statutory period for reply. Notice of Abandonment was mailed on May 27, 2008.

Petitioners aver that the delay was unavoidable because counsel's paralegal, Ms. Sanders, was absent from work from May 14, 2008, through the date the petition was filed due to emergency illness of her child.

Petitioners state, in pertinent part:

> Immediately preceding the date that the issue fee was due, Rutan's paralegal, Ms. Sanders, who was vital to the accuracy of the docketing system, began an extended absence based on medical leave. Ms. Sanders' child required emergency medical treatments that involved numerous trips to the hospital as well as tending to her child's care. As a result, Ms. Sanders was absent from work from May 14, 2008 through the present day (May 22, 2008). During Ms. Sanders' absence, all documentation associated with the issued application remained in her office.
>
> Ms. Sanders' child's severe heath problems substantially precluded her from reviewing the documentation which might have revealed when the issue fee was due. Due to this fact, she was also precluded from notifying any attorneys working on the case of the situation. Furthermore, because of the uniqueness of this situation there was no other person available that would have noticed the payment deadline.

The Director may revive an abandoned application if the delay in responding to the relevant outstanding Office requirement is shown to the satisfaction of the Director to be "unavoidable".[2] Decisions on reviving abandoned applications on the basis of "unavoidable" delay have adopted the reasonably prudent person standard in determining if the delay was unavoidable:

> The word 'unavoidable' . . . is applicable to ordinary human affairs, and requires no more or greater care or diligence than is generally used and observed by prudent and careful men in relation to their most important business. It permits them in the exercise of this care to rely upon the ordinary and trustworthy agencies of mail and telegraph, worthy and reliable

[2] 35 U.S.C. § 133.

> employees, and such other means and instrumentalities as are usually employed in such important business. If unexpectedly, or through the unforeseen fault or imperfection of these agencies and instrumentalities, there occurs a failure, it may properly be said to be unavoidable, all other conditions of promptness in its rectification being present.[3]

The showing of record is inadequate to establish unavoidable delay within the meaning of 35 U.S.C. § 133 and 37 CFR 1.137(a).[5] Specifically, an application is "unavoidably" abandoned only where petitioner, or counsel for petitioner, takes all action necessary for a proper response to the outstanding Office action, but through the intervention of unforeseen circumstances, such as failure of mail, telegraph, facsimile, or the negligence of otherwise reliable employees, the response is not timely received in the Office.[4]

A delay resulting from an error (*e.g.*, a docketing error) on the part of an employee in the performance of a clerical function may provide the basis for a showing of "unavoidable" delay, provided it is shown that:

(1) the error was the cause of the delay at issue;

(2) there was in place a business routine for performing the clerical function that could reasonably be relied upon to avoid errors in its performance;

(3) and the employee was sufficiently trained and experienced with regard to the function and routine for its performance that reliance upon such employee represented the exercise of due care.[5]

An adequate showing requires:

---

[3] In re Mattullath, 38 App. D.C. 497, 514-15 (1912)(quoting Ex parte Pratt, 1887 Dec. Comm'r Pat. 31, 32-33 (1887)); see also Winkler v. Ladd, 221 F. Supp. 550, 552, 138 USPQ 666, 167-68 (D.D.C. 1963), aff'd, 143 USPQ 172 (D.C. Cir. 1963); Ex parte Henrich, 1913 Dec. Comm'r Pat. 139, 141 (1913). In addition, decisions on revival are made on a "case-by-case basis, taking all the facts and circumstances into account." Smith v. Mossinghoff, 671 F.2d 533, 538, 213 USPQ 977, 982 (D.C. Cir. 1982). Finally, a petition cannot be granted where a petitioner has failed to meet his or her burden of establishing that the delay was "unavoidable." Haines v. Quigg, 673 F. Supp. 314, 316-17, 5 USPQ2d 1130, 1131-32 (N.D. Ind. 1987).

[4] Ex parte Pratt, 1887 Dec. Comm'r Pat. 31 (Comm'r Pat. 1887).

[5] See MPEP 711.03(c)(III)(C)(2).

(A) Statements by all persons with direct knowledge of the circumstances surrounding the delay, setting forth the facts as they know them.

(B) Petitioner must supply a thorough explanation of the docketing and call-up system in use and must identify the type of records kept and the person responsible for the maintenance of the system. This showing must include copies of mail ledgers, docket sheets, filewrappers and such other records as may exist which would substantiate an error in docketing, and include an indication as to why the system failed to provide adequate notice that a reply was due.

(C) Petitioner must supply information regarding the training provided to the personnel responsible for the docketing error, degree of supervision of their work, examples of other work functions carried out, and checks on the described work which were used to assure proper execution of assigned tasks.

The present petition lacks the showing required by (1), (2), and (3) above.

At the outset, it is noted that petitioners have not provided statements from all of the persons with direct knowledge of the circumstances surrounding the delay, setting forth the facts as they know them. Specifically, petitioners have not provided a statement from Ms. Sanders, the attorneys with whom she worked, or any other paralegals or assistants who may have had first-hand knowledge of the circumstances surrounding the delay. Petitioners should explain who, if anyone, other than Ms. Sanders, was involved in the docketing of notices received from the USPTO for this application, and provide statements from those persons.

As stated above, petitioners must supply a thorough explanation of the docketing and call-up system in use and must identify the type of records kept and the person responsible for the maintenance of the system. This showing must include copies of mail ledgers, docket sheets, filewrappers and such other records as may exist which would substantiate an error in docketing, and include an indication as to why the system failed to provide adequate notice that a reply was due.

Further, petitioner must supply information regarding the training provided to the personnel responsible for the docketing error, degree of supervision of their work, examples of other work functions carried out, and checks on the described work which were used to assure proper execution of assigned tasks.

Most importantly, it is noted that the Notice of Allowance and Fee(s) Due was mailed on February 14, 2008, but that Ms. Sanders did not begin her leave until May 14, 2008, three (3) months later and the actual date that the issue and publication fees were due. Petitioners must explain why the Notice apparently remained not entered or docketed for a reply as of May 14, 2008, and also explain whether any of the attorneys or other individuals working on this application had direct access to the docketing system. Essentially, petitioners must explain why this matter was not docketed, or the responsible attorney(s) notified, as of the date it was due. Surely, a reasonably prudent person acting with respect to his or her most important business would have made arrangements to pay the issue and publication fees prior to the actual date that the fees are due.

While an applicant may delay filing papers until the end of the time period for a response, the applicant assumes the risk attendant to such delay. *Ex parte Warren,* 1901 Dec. Comm'r Pat. 137 (Comm'r Pat. 1901).

Insufficient evidence has been proffered to show that the error in this case is a clerical error by a reliable and trusted employee. Rather, the showing of record is that petitioner was preoccupied with other matters. Petitioner's preoccupation with other matters which took precedence over the above-identified patent application does not constitute unavoidable delay.[6]

The U.S. Patent and Trademark Office must rely on the actions or inactions of duly authorized and voluntarily chosen representatives of the applicant, and applicant is bound by the consequences of those actions or inactions.[7] Specifically, petitioner's delay caused by the mistakes or negligence of his voluntarily chosen representative does not constitute unavoidable delay within the meaning of 35 U.S.C. § 133.[8]

---

[6] See Smith v. Mossinghoff, 671 F.2d 533, 538, 213 USPQ 977, 982 (D.C. Cir. 1982).

[7] Link v. Wabash, 370 U.S. 626, 633-34 (1962).

[8] Haines v. Quigg, 673 F. Supp. 314, 316-17, 5 USPQ2d 1130, 1131-32 (N. D. Ind. 1987); Smith v. Diamond, 209 USPQ 1091 (D.D.C. 1981); Potter v. Dann, 201 USPQ 574 (D.D.C. 1978); Ex parte Murray, 1891 Dec. Comm'r Pat. 130, 131 (Comm'r Pat. 1891).

In summary, the showing of record is insufficient to establish unavoidable delay within the meaning of 35 U.S.C. § 133 and 37 CFR 1.137(a). As petitioners have not shown that they exercised the standard of care observed by a reasonable person in the conduct of his or her most important business, the petition will be dismissed.[9]

**ALTERNATIVE VENUE**

Petitioner may wish to consider filing a renewed petition under 37 CFR 1.137(b), which now provides that where the delay in reply was unintentional, a petition may be filed to revive an abandoned application or a lapsed patent pursuant to 37 CFR 1.137(b). A grantable petition pursuant to 37 CFR 1.137(b) must be accompanied by:

(1) the required reply, unless previously filed. In a nonprovisional application abandoned for failure to prosecute, the required reply may be met by the filing of a continuing application. In a nonprovisional utility or plant application filed on or after 8 June, 1995, and abandoned for failure to prosecute, the required reply may also be met by the filing of a request for continued examination in compliance with § 1.114. In an application or patent, abandoned or lapsed for failure to pay the issue fee or any portion thereof, the required reply must be the payment of the issue fee or any outstanding balance thereof. In an application, abandoned for failure to pay the publication fee, the required reply must include payment of the publication fee.

(2) the petition fee as set forth in 37 CFR 1.17(m);

(3) a statement that the entire delay in filing the required reply from the due date for the reply until the filing of a grantable petition pursuant to 37 CFR 1.137(b) was unintentional. The Director may required additional information where there is a question whether the delay was unintentional; and

(4) any terminal disclaimer (and fee as set forth in 37 CFR 1.20(d)) required pursuant to 37 CFR 1.137(c)).

The filing of a petition under the unintentional standard cannot be intentionally delayed and therefore should be filed promptly. A person seeking revival due to unintentional delay cannot make a statement that the delay was unintentional unless the entire delay, including the delay from the date it was discovered that the application was abandoned until the filing of the petition to revive under 37 CFR 1.137(b), was unintentional. A statement

---

[9] See note 3, supra.

that the delay was unintentional is not appropriate if petitioner intentionally delayed the filing of a petition for revival under 37 CFR 1.137(b).

Further correspondence with respect to this matter should be addressed as follows:

By mail: Mail Stop Petition
Commissioner for Patents
P.O. Box 1450
Alexandria, VA 22313-1450

By FAX: (571) 273-8300
Attn: Office of Petitions

By hand: Customer Service Window
Mail Stop Petition
Randolph Building
401 Dulany Street
Alexandria, VA 22314

Telephone inquiries concerning this matter may be directed to the undersigned at (571) 272-3231.

DWood

Douglas I. Wood
Senior Petitions Attorney
Office of Petitions

UNITED STATES PATENT AND TRADEMARK OFFICE

COMMISSIONER FOR PATENTS
UNITED STATES PATENT AND TRADEMARK OFFICE
P.O. BOX 1450
ALEXANDRIA, VA 22313-1450
www.uspto.gov
DIW Oct-08

RUTAN & TUCKER, LLP.
611 ANTON BLVD
SUITE 1400
COSTA MESA CA 92626

COPY MAILED

OCT 15 2008

OFFICE OF PETITIONS

In re Application of :
Fiello et al. :
Application Number: 10/956183 :
Filing Date: 09/30/2004 : ON PETITION
Attorney Docket Number: 101525-0006P :

This is a decision on the petition under 37 CFR 1.137(b)[1] filed on September 22, 2008, to revive the above-identified application.

The petition is **GRANTED**.

This application became abandoned on May 15, 2008, for failure to timely submit the issue and publication fees as required by the Notice of Allowance and Fee(s) Due mailed on February 14, 2008, which set a three (3)-month statutory period for reply. Notice of Abandonment was mailed on May 27, 2008. On May 22, 2008, a petition under 37 CFR 1.137(a) was filed. On July 24, 2008, the petition was dismissed.

---

[1] Effective December 1, 1997, the provisions of 37 CFR 1.137(b) now provide that where the delay in reply was unintentional, a petition may be filed to revive an abandoned application or a lapsed patent pursuant to 37 CFR 1.137(b). A grantable petition filed under the provisions of 37 CFR 1.137(b) must be accompanied by:

(1) the required reply, unless previously filed. In a nonprovisional application abandoned for failure to prosecute, the required reply may be met by the filing of a continuing application. In a nonprovisional application filed on or after June 8, 1995, and abandoned for failure to prosecute, the required reply may also be met by the filing of a request for continued examination in compliance with § 1.114. In an application or patent, abandoned or lapsed for failure to pay the issue fee or any portion thereof, the required reply must be the payment of the issue fee or any outstanding balance thereof. In an application abandoned for failure to pay the publication fee, the required reply must include payment of the publication fee.

(2) the petition fee as set forth in 37 CFR 1.17(m);

(3) a statement that the entire delay in filing the required reply from the due date for the reply until the filing of a grantable petition pursuant to 37 CFR 1.137(b) was unintentional. The Director may required additional information where there is a question whether the delay was unintentional; and

(4) any terminal disclaimer (and fee as set forth in 37 CFR 1.20(d)) required pursuant to 37 CFR 1.137(c)).

Receipt of the issue and publication fees is acknowledged.

It is noted that the publication fee has been submitted twice. The duplicate payment will be credited to counsel's deposit account.

The application is referred to the Office of Data Management for processing into a patent.

Telephone inquiries concerning this matter may be directed to the undersigned at (571) 272-3231.

DWood

Douglas I. Wood
Senior Petitions Attorney
Office of Petitions

**UNITED STATES DEPARTMENT OF COMMERCE**
**COMMISSIONER FOR PATENTS**
P. O. BOX 1450
ALEXANDRIA, VA 22313-1450

Date : 6/20/2008B1
Patent No. : 7,350,672
Inventor(s) : Gerich
Issue Date : April 21 2008
Title : **FLUID DISPENSING APPARATUS**
Doc./File No. : **6489P002**

Re: Certificate of Correction

Consideration has been given your request for a certificate of correction, for the above-identified patent under the provisions of Rule 1.322 and 1.323.

Respecting, the alleged error in your request, inspection of the file of the application for the patent reveals that in item (56) U.S. Patent Documents, in the patent, is/are printed in accordance with the record in the Patent and Trademark Office, as passed to issued by the examiner. There being no fault on the part of the Patent and Trademark Office, it has no authority to issue a certificate of correction under the provision of 1.322.

In view of the foregoing, your request is hereby denied.

Further consideration will be given concerning this matter upon receipt of a request for **Reconsideration** (reconsideration should be accompanied by supporting document(s) such as, amendment, postcard receipt, 1449/892, etc.) and should be filed and directed to Decisions & Certificates of Correction Branch.

Ernest C. White, *LIE* (703) 308-9390 x122
Mary F. Diggs, *Supervisor* (703) 308-9390 x125
Decisions & Certificates of Correction Branch

BLAKELY SOKOLOFF TAYLOR & ZAFMAN LLP
1279 OAKMEAD PARKWAY
SUNNYVALE CA 94085-4040

ecw

UNITED STATES PATENT AND TRADEMARK OFFICE

Commissioner for Patents
United States Patent and Trademark Office
P.O. Box 1450
Alexandria, VA 22313-1450
www.uspto.gov

BLAKELY SOKOLOFF TAYLOR & ZAFMAN
1279 OAKMEAD PARKWAY
SUNNYVALE, CA 94085-4040

COPY MAILED

AUG 01 2007

OFFICE OF PETITIONS

| | |
|---|---|
| In re Application of | : |
| Gerhard Schrom et al | : |
| Application No. 10/956,192 | : DECISION GRANTING PETITION |
| Filed: September 30, 2004 | : UNDER 37 CFR 1.313(c)(2) |
| Attorney Docket No. 42P20109 | : |

This is a decision on the petition, filed July 30, 2007, under 37 CFR 1.313(c)(2) to withdraw the above-identified application from issue after payment of the issue fee.

The petition is **GRANTED**.

The above-identified application is withdrawn from issue for consideration of a submission under 37 CFR 1.114 (request for continued examination). See 37 CFR 1.313(c)(2).

***Petitioner is advised that the issue fee paid on July 26, 2007 in the above-identified application cannot be refunded. If, however, the above-identified application is again allowed, petitioner may request that it be applied towards the issue fee required by the new Notice of Allowance.***[1]

Telephone inquiries should be directed to the undersigned at (571) 272-3218.

This matter is being referred to Technology Center AU 2838 for processing of the request for continued examination under 37 CFR 1.114 and for consideration of the Information Disclosure Statement.

Frances Hicks
Petitions Examiner
Office of Petitions

C:\Documents and Settings\fhicks\My Documents\470\july10\956192.wpd

---

[1] *The request to apply the issue fee to the new Notice may be satisfied by completing and returning the new Part B – Fee(s) Transmittal Form (along with any balance due at the time of submission). Petitioner is advised that the Issue Fee Transmittal Form must be completed and timely submitted to avoid abandonment.*

UNITED STATES PATENT AND TRADEMARK OFFICE

COMMISSIONER FOR PATENTS
UNITED STATES PATENT AND TRADEMARK OFFICE
P.O. BOX 1450
ALEXANDRIA, VA 22313-1450
www.uspto.gov

INTEL CORPORATION
c/o INTELLEVATE, LLC
P.O. BOX 52050
MINNEAPOLIS MN 55402

**COPY MAILED**

AUG 04 2008

**OFFICE OF PETITIONS**

In re Application of
Lint, et al.
Application No. 10/956,203
Filed: September 30, 2004
Attorney Docket No. 42P18689

DECISION ON PETITION

This is a decision on the petition under the unintentional provisions of 37 CFR 1.137(b), filed June 10, 2008, to revive the above-identified application.

The petition is **GRANTED**.

This application became abandoned February 14, 2008 for failure to timely pay the issue and publication fees as required by the Notice of Allowance and Fee(s) Due, mailed November 13, 2007. Notice of Abandonment was mailed March 7, 2008.

The petition satisfies the requirements of 37 CFR 1.137(b) in that petitioner has supplied (1) the reply in the form of payment of the issue fee and publication fee, (2) the required petition fee; and (3) a proper statement of unintentional delay.

The file does not indicate a change of address has been submitted, although the address given on the petition differs from the address of record. If appropriate, a change of address should be filed in accordance with MPEP 601.03. A courtesy copy of this decision is being mailed to the address given on the petition; however, the Office will mail all future correspondence solely to the address of record.

Telephone inquiries concerning this decision should be directed to the undersigned at (571) 272-3205.

This application is being referred to Publishing Division for processing into a patent.

Alesia M. Brown
Petitions Attorney
Office of Petitions

CC: DAVID MCABEE
2111 NE 25th Avenue
Hillsboro, OR 97124

UNITED STATES PATENT AND TRADEMARK OFFICE

Commissioner for Patents
United States Patent and Trademark Office
P.O. Box 1450
Alexandria, VA 22313-1450
www.uspto.gov

TRANSMETA C/O MURABITO, HAO & BARNES LLP
TWO NORTH MARKET STREET
THIRD FLOOR
SAN JOSE CA 95113

**COPY MAILED**

NOV 1 9 2008

**OFFICE OF PETITIONS**

| | | |
|---|---|---|
| In re Application of | : | |
| Koniaris, et al. | : | |
| Application No. 10/956,219 | : | DECISION ON PETITION |
| Filed: September 30, 2004 | : | |
| Attorney Docket No. TRAN-P307 | : | |

This is a decision on the petition, filed October 10, 2008 (certificate of mailing date October 6, 2008), which is being treated as a petition under 37 CFR 1.181 (no fee) requesting withdrawal of the holding of abandonment in the above-identified application.

The petition is **DISMISSED**.

Any request for reconsideration of this decision should be filed within two (2) months from the mail date of this decision. *Note* 37 CFR 1.181(f). The request for reconsideration should include a cover letter and be entitled as a "Renewed Petition under 37 CFR 1.181 to Withdraw the Holding of Abandonment."

This application was held abandoned for failure to timely pay the issue fee on or before July 11, 2008, as required by the Notice of Allowance and Fee(s) Due (Notice), mailed April 11, 2008.

Petitioner asserts that the Notice dated April 11, 2008 was not received.

A review of the written record indicates no irregularity in the mailing of the Notice, and, in the absence of any irregularity, there is a strong presumption that the Notice was properly mailed to the practitioner at the address of record. This presumption may be overcome by a showing that the Notice was not in fact received. In this regard, the showing required to establish the failure to receive the Notice must consist of the following:

1. a statement from practitioner stating that the Notice was not received by the practitioner;
2. a statement from the practitioner attesting to the fact that a search of the file jacket and docket records indicates that the Notice was not received; and

3. a copy of the docket record where the nonreceived Notice would have been entered had it been received must be attached to and referenced in the practitioner'statement.

*See* MPEP § 711.03(c) under subheading "Petition to Withdraw Holding of Abandonment Based on Failure to Receive Office Action," and "Withdrawing the Holding of Abandonment When Office Actions Are Not Received," 1156 Official Gazette 53 (November 16, 1993).

The petition fails to satisfy all of the above-stated requirements. In this regard, the petition lacks requirements 2 and 3.

Accordingly, absent the required evidence to establish nonreceipt of the Notice of April 11, 2008, the petition requesting withdrawal of the holding of abandonment cannot be granted at this time.

If petitioner cannot supply the evidence necessary to withdraw the holding of abandonment, or simply does not wish to, petitioner should consider filing a petition under 37 CFR 1.137(b) stating that the delay was unintentional. Public Law 97-247, § 3, 96 Stat. 317 (1982), which revised patent and trademark fees, amended 35 U.S.C. § 41(a)(7) to provide for the revival of an "unintentionally" abandoned application without a showing that the delay in prosecution or in late payment of the issue fee was "unavoidable." This amendment to 35 U.S.C. § 41(a)(7) has been implemented in 37 CFR 1.137(b). An "unintentional" petition under 37 CFR 1.137(b) must be accompanied by the $$1,620.00 petition fee.

The filing of a petition under 37 CFR 1.137(b) cannot be intentionally delayed and therefore must be filed promptly. A person seeking revival due to unintentional delay cannot make a statement that the delay was unintentional unless the entire delay, including the date it was discovered that the application was abandoned until the filing of the petition to revive under 37 CFR 1.137(b), was unintentional. A statement that the delay was unintentional is not appropriate if petitioner intentionally delayed the filing of a petition for revival under 37 CFR 1.137(b).

Further correspondence with respect to this matter should be addressed as follows:

By Mail: Mail Stop PETITION
Commissioner for Patents
P. O. Box 1450
Alexandria, VA 22313-1450

By hand: U. S. Patent and Trademark Office
Customer Service Window, Mail Stop Petitions
Randolph Building
401 Dulany Street
Alexandria, VA 22314

By facsimile: **(571) 273-8300**
Attn: Office of Petitions

Telephone inquiries concerning this decision should be directed to the undersigned at (571) 272-3230.

Shirene Willis Brantley

Shirene Willis Brantley
Senior Petitions Attorney
Office of Petitions

UNITED STATES PATENT AND TRADEMARK OFFICE

Commissioner for Patents
United States Patent and Trademark Office
P.O. Box 1450
Alexandria, VA 22313-1450
www.uspto.gov

TRANSMETA C/O MURABITO, HAO & BARNES LLP
TWO NORTH MARKET STREET
THIRD FLOOR
SAN JOSE CA 95113

MAILED

JAN 30 2009

OFFICE OF PETITIONS

| | | |
|---|---|---|
| In re Application of | : | |
| Koniaris, et al. | : | |
| Application No. 10/956,219 | : | DECISION ON PETITION |
| Filed: September 30, 2004 | : | |
| Attorney Docket No. TRAN-P307 | : | |

This is a decision on the petition, filed January 8, 2009, under 37 CFR 1.137(b) requesting revival of the above-identified application.

The petition is **GRANTED**.

This application was held abandoned for failure to timely pay the issue fee on or before July 11, 2008, as required by the Notice of Allowance and Fee(s) Due (Notice), mailed April 11, 2008. A Notice of Abandonment was mailed on August 7, 2008

The petition satisfies the requirements of 37 CFR 1.137(b) in that petitioner has supplied (1) the reply in the form of payment of the issue fee of $1,510.00, (2) the petition fee of $1,620.00; and (3) an adequate statement of unintentional delay.

Telephone inquiries concerning this decision should be directed to the undersigned at (571) 272-3230.

This application is being referred to the Office of Data Management for processing into a patent.

Shirene Willis Brantley

Shirene Willis Brantley
Senior Petitions Attorney
Office of Petitions

UNITED STATES PATENT AND TRADEMARK OFFICE

UNITED STATES DEPARTMENT OF COMMERCE
United States Patent and Trademark Office
Address: COMMISSIONER FOR PATENTS
P.O. Box 1450
Alexandria, Virginia 22313-1450
www.uspto.gov

K&L Gates LLP
P.O. Box 1135
CHICAGO, IL 60690

Mail Date: 04/20/2010

| | | |
|---|---|---|
| **Applicant** | : Karen M. Cregan | : DECISION ON REQUEST FOR |
| **Patent Number** | : 7591723 | : RECALCULATION of PATENT |
| **Issue Date** | : 09/22/2009 | : TERM ADJUSTMENT IN VIEW |
| **Appliction No** | : 10/956,222 | : OF WYETH AND NOTICE OF INTENT TO |
| **Filed** | : 09/30/2004 | : ISSUE CERTIFICATE OF CORRECTION |
| | | : |

The Request for Recalculation is **GRANTED** to the extent indicated.

The patent term adjustment has been determined to be **1172** days. The USPTO will *sua sponte* issue a certificate of correction reflecting the amount of PTA days determined by the recalculation.

Prior to the issuance of the certificate of correction, the USPTO will afford patentee an opportunity to be heard and request reconsideration. Accordingly, patentee has **one month or thirty (30) days**, whichever is longer, to file a request for reconsideration of this patent term adjustment calculation. See 35 U.S.C. 154(b)(3)(B)(ii) and 37 CFR 1.322(a)(4). No extensions of time will be granted under 37 CFR 1.136.

Patentee should use document code PET.OP if electronically filing a request for reconsideration of this patent term adjustment calculation. The patentee must also include the information required by 37 CFR 1.705(b)(2) and the fee required by 37 CFR 1.18(e). If patentee does not file a timely request for reconsideration of this patent term adjustment calculation including the information required by 37 CFR 1.705(b)(2) and the fee required by 37 CFR 1.18(e), the USPTO will issue a certificate of correction reflecting the PTA determination noted above.

Patentee should be aware that in order to preserve the right to review in the United States District Court for the District of Columbia of the USPTO patent term adjustment determination, patentee must ensure that he or she also take the steps required under 35 U.S.C. 154(b)(4)(A) in a timely manner. Nothing in the request for recalculation should be construed as providing an alternative time frame for commencing a civil action under 35 U.S.C. 154(b)(4)(A).

Any questions concerning this decision should be directed to the Office of Patent Legal Administration at 571-272-7702.

UNITED STATES PATENT AND TRADEMARK OFFICE

Commissioner for Patents
United States Patent and Trademark Office
P.O. Box 1450
Alexandria, VA 22313-1450
www.uspto.gov

KOPPEL, JACOBS, PATRICK & HEYBL
555 ST. CHARLES DRIVE
SUITE 107
THOUSAND OAKS CA 91360

**COPY MAILED**

MAR 2 5 2005

**OFFICE OF PETITIONS**

| | | |
|---|---|---|
| In re Application of | : | |
| Higgins et al. | : | DECISION ON PETITION |
| Application No. 10/956,231 | : | |
| Filed: November 30, 2004 | : | |
| Attorney Docket No. 03RS039US8 | : | |

This is a decision on the petition under 37 CFR 1.182, filed November 30, 2004, requesting that the above-identified application be accorded the later filing date of November 30, 2004, the date omitted Figures 6 and 7 were filed with the United States Patent and Trademark Office.

On September 30, 2004, applicants deposited the above-identified application. However, on November 15, 2004, the Office of Initial Patent Examination mailed a "Notice to File Missing Parts of Nonprovisional Application," stating that the application had been accorded a filing date of September 30, 2004, and advising applicants that Figures 6 and 7 appeared to have been omitted from the application. Additionally, the Notice required applicants to file an executed oath or declaration, replacement drawings, and a $130.00 late surcharge.

In response, on November 30, 2004, applicants filed the present petition, an authorization to charge the requisite fees, an executed declaration and five sheets of replacement drawings, including Figures 6 and 7 described in the specification. Applicants requested that the above-identified application be accorded the later filing date of November 30, 2004, the date omitted Figures 6 and 7 were filed with the Office.

The petition is **granted**.

The Office of Initial Patent Examination is directed **to correct the filing date to November 30, 2004,** using the 5 sheets of drawings submitted on November 30, 2004. The Office is also directed to mail a corrected filing receipt.

Any inquiries related to this decision should be directed to the undersigned at (571) 272-3211.

Christina Tartera Donnell

Christina Tartera Donnell
Senior Petitions Attorney
Office of Petitions

UNITED STATES PATENT AND TRADEMARK OFFICE

Commissioner for Patents
United States Patent and Trademark Office
P.O. Box 1450
Alexandria, VA 22313-1450
www.uspto.gov

Dorsey & Whitney LLP
555 California Street
Suite 1000
San Francisco, CA 94104

COPY MAILED
AUG 1 6 2005
OFFICE OF PETITIONS

| | |
|---|---|
| In re Application of | : |
| Senzaki et al. | : DECISION REFUSING TO |
| Application No. 10/956,232 | : ACCORD STATUS UNDER |
| Filed: September 30, 2004 | : 37 CFR 1.47(a) |
| Attorney Docket No. 33575/US/2/MSS | : |

This is in response to the petition under 37 CFR 1.47(a), filed July 8, 2005 (certificate of mailing dated July 6, 2005). Applicants obtained an extension of time for response within the fifth month. Therefore, the petition is filed timely.

The petition is **dismissed**.

Applicants are given TWO (2) MONTHS from the mailing date of this decision to reply, correcting the below-noted deficiencies. Any reply should be entitled "Request for Reconsideration of Petition Under 37 CFR 1.47(a)," and should address the deficiencies noted below, except that the reply may include an oath or declaration executed by the non-signing inventor. Failure to respond will result in abandonment of the application. Any extensions of time will be governed by 37 CFR 1.136(a).

The above-identified application was filed on September 30, 2004, without an executed oath or declaration. Accordingly, on December 6, 2004, the Office of Initial Patent Examination mailed a "Notice to File Missing Parts of Nonprovisional Application," requiring an executed oath or declaration and a surcharge for its late filing.

In response, on July 8, 2005 (certificate of mailing dated July 6, 2005), applicants submitted the present petition, copies of letters to the nonsigning inventor, a request for an extension of time for response within the fifth month, a $2,160.00 extension of time fee, a $130.00 petition fee, a $130.00 surcharge, and an authorization to charge any necessary fees.

A grantable petition under 37 CFR 1.47(a) requires: (1) proof that the non-signing inventor cannot be reached or refuses to sign the oath or declaration after having been presented with the application papers (specification, claims and drawings); (2) an acceptable oath or declaration in compliance with

35 U.S.C. §§ 115 and 116; (3) the petition fee; and (4) a statement of the last known address of the non-signing inventor. Applicants lack items (1) and (2) as set forth above.

As to item (1): applicants states that Morgan Libby mailed a copy of the application papers as filed, including a description, claims, abstract, and drawings, the Declaration and the Assignment to Dr. Lee, the nonsigning inventor at his home address. Applicants assert that Dr. Lee informed Ms. Libby that he refused to sign the Declaration and assignment documents. However, a statement of facts, signed by Ms. Libby regarding the oral refusal, does not accompany the petition.

Applicants stated that subsequently the Palo Alto office of Dorsey & Whitney mailed a letter to Dr. Lee, signed by Tianjun Hun, via certified mail to Dr. Lee's home address. The letter included a copy of the application papers and requested that Dr. Lee sign and return the Declaration and the Assignment. A copy of the letter accompanies the petition. However, a statement of facts, signed by Tianjun Hun, reciting the events as known to him, does not accompany the petition.

The Office notes that a statement of facts must be signed, where at all possible, by a person having firsthand knowledge of the events recited therein. See MPEP 409.03(d). Statements based on hearsay will not normally be accepted. Id. Additionally, when there is an express oral refusal, that fact along with the time and place of the refusal must be stated in the statement of facts. Id.

As to item (2), the petition states that applicants submitted a Declaration For Patent Application, which is missing the signature of a joint inventor. After reviewing the documents submitted on petition, the Office did not locate the aforementioned Declaration For Patent Application. Accordingly, applicants failed to submit an oath or declaration for the patent application in compliance with 37 CFR 1.63 and 1.64.

The Office notes that all the available joint inventors must make an oath or declaration on their own behalf as required by 37 CFR 1.63 and on behalf of the nonsigning joint inventor as required by 37 CFR 1.64. See MPEP 409.03(a)(A). An oath or declaration signed by all the available joint inventors with the signature block of the nonsigning inventor left blank may be treated as having been signed by all the available joint inventors on behalf of the nonsigning inventor. Id.

Applicants must submit an oath or declaration in compliance with 37 CFR 1.63 and 1.64, which identifies the entire inventive entity, the correct mailing address and citizenship of each inventor, and is signed by the two signing inventors on behalf of themselves and the nonsigning inventor.

Further correspondence with respect to this matter should be addressed as follows and **to the attention of Christina Tartera Donnell, Senior Petitions Attorney**:

By mail: Mail Stop Petition
Commissioner for Patents
P.O. Box 1450
Alexandria, VA 22313-1450

By FAX: (571) 273-8300
Attn: Office of Petitions

By hand: Customer Service Window
Randolph Building
401 Dulany Street
Alexandria, VA 22314

Applicants paid a fee of $130.00 upon filing the present petition. Effective December 8, 2004, the fee for a petition under 37 CFR 1.47(a) increased to $200.00. Therefore, applicants' Deposit Account will be charged the amount owed of $70.00.

Telephone inquiries related to this decision may be directed to the undersigned at (571) 272-3211.

Christina Tartera Donnell

Christina Tartera Donnell
Senior Petitions Attorney
Office of Petitions

UNITED STATES PATENT AND TRADEMARK OFFICE

Commissioner for Patents
United States Patent and Trademark Office
P.O. Box 1450
Alexandria, VA 22313-1450
www.uspto.gov

Dorsey & Whitney LLP
555 California Street
Suite 1000
San Francisco, CA 94101

COPY MAILED
NOV 25 2005
OFFICE OF PETITIONS

| | |
|---|---|
| In re Application of<br>Senzaki et al.<br>Application No. 10/956,232<br>Filed: September 30, 2004<br>Attorney Docket No. 33575/US/2/MSS | DECISION ACCORDING STATUS<br>UNDER 37 CFR 1.47(a) |

This is in response to the renewed petition under 37 CFR 1.47(a), filed on November 16, 2005 (certificate of mailing dated November 14, 2005).[1]

The petition is granted.

Petitioner showed that, Sang-In Lee, the non-signing inventor, refused to join in the filing of the above-identified application after having been mailed the application papers. Specifically, the statements of facts of Tianjun Hou and Morgan Libby established that petitioner mailed copies of the application papers, as well as a declaration to the last known address of the non-signing inventor; however, he refused to sign the declaration.

The above-identified application and papers have been reviewed and found in compliance with 37 CFR 1.47(a). This application is hereby accorded Rule 1.47(a) status. As provided in Rule 1.47(c), this Office will forward notice of this application's filing to the non-signing inventor at the address given in the present petition. Notice of the filing of this application will also be published in the Official Gazette.

The matter is being referred to the Technology Center Art Unit 2812.

Telephone inquiries regarding this decision should be directed to the undersigned at (571) 272-3211.

Christina T. Donnell
Christina Tartera Donnell
Senior Petitions Attorney
Office of Petitions

[1] Petitioner obtained an extension of time for response within the first month. Accordingly, the petition is filed timely.

UNITED STATES PATENT AND TRADEMARK OFFICE

Commissioner for Patents
United States Patent and Trademark Office
P.O. Box 1450
Alexandria, VA 22313-1450
www.uspto.gov

Sang-In Lee
21608 San Juan Road
Cupertino, CA 95014

**COPY MAILED**

NOV 25 2005

**OFFICE OF PETITIONS**

| | | |
|---|---|---|
| In re Application of | : | |
| Senzaki et al. | : | |
| Application No. 10/956,232 | : | LETTER |
| Filed: September 30, 2004 | : | |
| Attorney Docket No. 33575/US/2/MSS | : | |

Dear Mr. Lee:

You are named as a joint inventor in the above-identified United States patent application filed under the provisions of 35 U.S.C. 116 (United States Code) and 37 CFR 1.47(a), Rules of Practice in Patent Cases. Should a patent be granted on the application you will be designated therein as a joint inventor.

As a named inventor you are entitled to inspect any paper in the file wrapper of the application, order copies of all or any part thereof (at a prepaid cost per 37 CFR 1.19) or make your position of record in the application. Alternatively, you may arrange to do any of the preceding through a registered patent attorney or agent presenting written authorization from you. If you care to join the application, counsel of record (see below) would presumably assist you. Joining in the application would entail the filing of an appropriate oath or declaration by you pursuant to 37 CFR 1.63.

Requests for information regarding your application should be directed to the File Information Unit at (703) 308-2733. Information regarding how to pay for and order a copy of the application, or a specific paper in the application, should be directed to Certification Division at (703) 308-9726 or 1-800-972-6382 (outside the Washington D.C. area).

Christina T. Donnell

Christina Tartera Donnell
Senior Petitions Attorney
Office of Petitions

Dorsey & Whitney LLP
555 California Street
Suite 1000
San Francisco, CA 94101

UNITED STATES PATENT AND TRADEMARK OFFICE

COMMISSIONER FOR PATENTS
UNITED STATES PATENT AND TRADEMARK OFFICE
WASHINGTON, DC 20231
www.uspto.gov

MAILED Paper No.

JAN 0 7 2005

Technology Center 2100

Gerald C. Chan
Three Embarcadero Center, Suite 1800
San Francisco, CA 94111-4067

In re Application of: Michael Xie, et al.
Application No. 10/956,240
Filed: September 30, 2004
For: SYSTEMS AND METHODS FOR PASSING NETWORK TRAFFIC CONTENT

DECISION ON PETITION TO MAKE SPECIAL

This is a decision on the petition under 37 C.F.R. § 1.102(c) and M.P.E.P. § 708.02, Section IV: Applicant's Age, filed November 15 2004, to make the above-identified application special.

A grantable petition to make special under 37 C.F.R. § 1.102(c) and in accordance with M.P.E.P. § 708.02, Section IV must include a showing, as by a birth certificate or the applicant's statement, that the applicant is sixty five (65) years of age or more. No fee is required for this petition.

The petition includes a statement/declaration that the applicant, Bing Xie, is over sixty five (65) years of age.

Accordingly, the petition is GRANTED. The application is being forwarded to the examiner for expedite prosecution.

James R. Matthews
For Vincent N. Trans
Special Program Examiner
Technology Center 2100
Computer Architecture, Software, and Information Security
(571) 272-3613

UNITED STATES PATENT AND TRADEMARK OFFICE

Commissioner for Patents
United States Patent and Trademark Office
P.O. Box 1450
Alexandria, VA 22313-1450
www.uspto.gov

VISTA IP LAW GROUP LLP
12930 SARATOGA AVENUE
SUITE D-2
SARATOGA, CA 95070

**COPY MAILED**

DEC 0 6 2007

**OFFICE OF PETITIONS**

| | | |
|---|---|---|
| In re Application of | : | |
| Scott McGill et al | : | |
| Application No. 10/956,249 | : | DECISION DISMISSING PETITION |
| Filed: September 30, 2004 | : | UNDER 37 CFR 1.78(a)(3) |
| Attorney Docket No. 04-132 | : | |

This is a decision on the petition under 37 CFR 1.78(a)(3), filed April 4, 2007, to accept an unintentionally delayed claim under 35 U.S.C. §120 for the benefit of priority to prior-filed nonprovisional Application set forth in the amendment filed with the petition.

The petition is **DISMISSED**.

A petition for acceptance of a claim for late priority under 37 CFR 1.78(a)(3) is only applicable to those applications filed on or after November 29, 2000 and after the expiration of the period specified in 37 CFR 1.78(a)(2)(ii). In addition, the petition under 37 CFR 1.78(a)(3) must be accompanied by:

**(1)** the reference required by 35 U.S.C. § 120 and 37 CFR 1.78(a)(2)(i) of the prior-filed application, unless previously submitted;
**(2)** the surcharge set forth in § 1.17(t); and
**(3)** a statement that the entire delay between the date the claim was due under 37 CFR 1.78(a)(2)(ii) and the date the claim was filed was unintentional. The Director may require additional information where there is a question whether the delay was unintentional.

The present amendment sets forth an incorrect application number; i.e., 11/920,581 rather than 10/920,581. Petitioner must submit an amendment correcting the reference to the improper application. Any request for reconsideration of this decision on petition should be accompanied by a renewed petition under 37 CFR 1.78(a)(3).

Further correspondence with respect to this matter should be addressed as follows:

By mail: Mail Stop PETITIONS
Commissioner for Patents
Post Office Box 1450
Alexandria, VA 22313-1450

By hand: Customer Service Window
Mail Stop Petitions
Randolph Building
401 Dulany Street
Alexandria, VA 22314

By fax: (571) 273-8300
ATTN: Office of Petitions

Any questions concerning this matter may be directed to Irvin Dingle at (571) 272-3210.

Frances Hicks
Petition Examiner
Office of Petitions

UNITED STATES PATENT AND TRADEMARK OFFICE

Commissioner for Patents
United States Patent and Trademark Office
P.O. Box 1450
Alexandria, VA 22313-1450
www.uspto.gov

VISTA IP LAW GROUP LLP
12930 SARATOGA AVENUE
SUITE D-2
SARATOGA, CA 95070

COPY MAILED
SEP 18 2008

| | |
|---|---|
| In re Application of | : |
| Scott McGill et al | : |
| Application No. 10/956,249 | : DECISION ON PETITION |
| Filed: September 30, 2004 | : UNDER 37 CFR 1.78(a)(3) |
| Attorney Docket No. 04-132 | : |

This is a decision on the renewed petition under 37 CFR 1.78(a)(3), filed January 7, 2008, to accept an unintentionally delayed claim under 35 U.S.C. § 120 for the benefit of priority to the prior-filed nonprovisional application set forth in the amendment filed with the petition.

The petition is **GRANTED**.

A petition for acceptance of a claim for late priority under 37 CFR 1.78(a)(3) is only applicable to those applications filed on or after November 29, 2000. Further, the petition is appropriate only after the expiration of the period specified in 37 CFR 1.78(a)(2)(ii). In addition, the petition under 37 CFR 1.78(a)(3) must be accompanied by:

**(1)** the reference required by 35 U.S.C. § 120 and 37 CFR 1.78(a)(2)(i) of the prior-filed application, unless previously submitted;
**(2)** the surcharge set forth in § 1.17(t); and
**(3)** a statement that the entire delay between the date the claim was due under 37 CFR 1.78(a)(2)(ii) and the date the claim was filed was unintentional. The Director may require additional information where there is a question whether the delay was unintentional.

All of the above requirements having been satisfied, the late claim for priority under 35 U.S.C. § 120 is accepted as being unintentionally delayed.

***The granting of the petition to accept the delayed benefit claim to the prior-filed application under 37 CFR 1.78(a)(3) should not be construed as meaning that this application is entitled to the benefit of the prior-filed application. In order for this application to be entitled to the benefit of the prior-filed application, all other requirements under 35 U.S.C. § 120 and 37 CFR 1.78(a)(1) and (a)(2) must be met. Similarly, the fact that the corrected Filing Receipt accompanying this decision on petition includes the prior-filed application should not be***

***construed as meaning that applicant is entitled to the claim for benefit of priority to the prior-filed application noted thereon. Accordingly, the examiner will, in due course, consider this benefit claim and determine whether the application is entitled to the benefit of the earlier filing date.***

A corrected Filing Receipt, which includes the priority claim to the prior-filed nonprovisional application, accompanies this decision on petition.

Any inquiries concerning this decision may be directed to Irvin Dingle at (571) 272-3210. All other inquiries concerning either the examination procedures or status of the application should be directed to the Technology Center.

This application is being forwarded to Technology Center Art Unit 3733 for consideration by the examiner of applicant's entitlement to claim benefit of priority under 35 U.S.C. § 120 to the prior-filed application.

David Bucci
Petition Examiner
Office of Petitions

**ATTACHMENT**: Corrected Filing Receipt

UNITED STATES PATENT AND TRADEMARK OFFICE

UNITED STATES DEPARTMENT OF COMMERCE
United States Patent and Trademark Office
Address: COMMISSIONER FOR PATENTS
P.O. Box 1450
Alexandria, Virginia 22313-1450
www.uspto.gov

| APPLICATION NUMBER | FILING or 371(c) DATE | GRP ART UNIT | FIL FEE REC'D | ATTY.DOCKET.NO | TOT CLAIMS | IND CLAIMS |
|---|---|---|---|---|---|---|
| 10/956,249 | 09/30/2004 | 3733 | 1054 | 04-132 | 31 | 4 |

**CONFIRMATION NO. 6756**

**CORRECTED FILING RECEIPT**

41696
VISTA IP LAW GROUP LLP
12930 Saratoga Avenue
Suite D-2
Saratoga, CA 95070

*OC000000032142022*

Date Mailed: 09/18/2008

Receipt is acknowledged of this non-provisional patent application. The application will be taken up for examination in due course. Applicant will be notified as to the results of the examination. Any correspondence concerning the application must include the following identification information: the U.S. APPLICATION NUMBER, FILING DATE, NAME OF APPLICANT, and TITLE OF INVENTION. Fees transmitted by check or draft are subject to collection. Please verify the accuracy of the data presented on this receipt. **If an error is noted on this Filing Receipt, please submit a written request for a Filing Receipt Correction. Please provide a copy of this Filing Receipt with the changes noted thereon. If you received a "Notice to File Missing Parts" for this application, please submit any corrections to this Filing Receipt with your reply to the Notice. When the USPTO processes the reply to the Notice, the USPTO will generate another Filing Receipt incorporating the requested corrections**

**Applicant(s)**

Scott McGill, San Ramon, CA;
Harold F. Carrison, Pleasanton, CA;
Mukund R. Patel, San Jose, CA;
Albert Arcadio Delacruz, Colma, CA;

**Assignment For Published Patent Application**

Scimed Life Systems, Inc., Maple Grove, MN

**Power of Attorney:** The patent practitioners associated with Customer Number 41696

**Domestic Priority data as claimed by applicant**

This application is a CIP of 10/920,581 08/17/2004

**Foreign Applications**

**If Required, Foreign Filing License Granted:** 01/04/2005

The country code and number of your priority application, to be used for filing abroad under the Paris Convention, is **US 10/956,249**

**Projected Publication Date:** Not Applicable

**Non-Publication Request:** No

**Early Publication Request:** No

**Title**

Apparatus and methods for delivering compounds into vertebrae for vertebroplasty

**Preliminary Class**

606

## PROTECTING YOUR INVENTION OUTSIDE THE UNITED STATES

Since the rights granted by a U.S. patent extend only throughout the territory of the United States and have no effect in a foreign country, an inventor who wishes patent protection in another country must apply for a patent in a specific country or in regional patent offices. Applicants may wish to consider the filing of an international application under the Patent Cooperation Treaty (PCT). An international (PCT) application generally has the same effect as a regular national patent application in each PCT-member country. The PCT process **simplifies** the filing of patent applications on the same invention in member countries, but **does not result** in a grant of "an international patent" and does not eliminate the need of applicants to file additional documents and fees in countries where patent protection is desired.

Almost every country has its own patent law, and a person desiring a patent in a particular country must make an application for patent in that country in accordance with its particular laws. Since the laws of many countries differ in various respects from the patent law of the United States, applicants are advised to seek guidance from specific foreign countries to ensure that patent rights are not lost prematurely.

Applicants also are advised that in the case of inventions made in the United States, the Director of the USPTO must issue a license before applicants can apply for a patent in a foreign country. The filing of a U.S. patent application serves as a request for a foreign filing license. The application's filing receipt contains further information and guidance as to the status of applicant's license for foreign filing.

Applicants may wish to consult the USPTO booklet, "General Information Concerning Patents" (specifically, the section entitled "Treaties and Foreign Patents") for more information on timeframes and deadlines for filing foreign patent applications. The guide is available either by contacting the USPTO Contact Center at 800-786-9199, or it can be viewed on the USPTO website at http://www.uspto.gov/web/offices/pac/doc/general/index.html.

For information on preventing theft of your intellectual property (patents, trademarks and copyrights), you may wish to consult the U.S. Government website, http://www.stopfakes.gov. Part of a Department of Commerce initiative, this website includes self-help "toolkits" giving innovators guidance on how to protect intellectual property in specific countries such as China, Korea and Mexico. For questions regarding patent enforcement issues, applicants may call the U.S. Government hotline at 1-866-999-HALT (1-866-999-4158).

## LICENSE FOR FOREIGN FILING UNDER

## Title 35, United States Code, Section 184

## Title 37, Code of Federal Regulations, 5.11 & 5.15

**GRANTED**

The applicant has been granted a license under 35 U.S.C. 184, if the phrase "IF REQUIRED, FOREIGN FILING LICENSE GRANTED" followed by a date appears on this form. Such licenses are issued in all applications where the conditions for issuance of a license have been met, regardless of whether or not a license may be required as

set forth in 37 CFR 5.15. The scope and limitations of this license are set forth in 37 CFR 5.15(a) unless an earlier license has been issued under 37 CFR 5.15(b). The license is subject to revocation upon written notification. The date indicated is the effective date of the license, unless an earlier license of similar scope has been granted under 37 CFR 5.13 or 5.14.

This license is to be retained by the licensee and may be used at any time on or after the effective date thereof unless it is revoked. This license is automatically transferred to any related applications(s) filed under 37 CFR 1.53(d). This license is not retroactive.

The grant of a license does not in any way lessen the responsibility of a licensee for the security of the subject matter as imposed by any Government contract or the provisions of existing laws relating to espionage and the national security or the export of technical data. Licensees should apprise themselves of current regulations especially with respect to certain countries, of other agencies, particularly the Office of Defense Trade Controls, Department of State (with respect to Arms, Munitions and Implements of War (22 CFR 121-128)); the Bureau of Industry and Security, Department of Commerce (15 CFR parts 730-774); the Office of Foreign AssetsControl, Department of Treasury (31 CFR Parts 500+) and the Department of Energy.

**NOT GRANTED**

No license under 35 U.S.C. 184 has been granted at this time, if the phrase "IF REQUIRED, FOREIGN FILING LICENSE GRANTED" DOES NOT appear on this form. Applicant may still petition for a license under 37 CFR 5.12, if a license is desired before the expiration of 6 months from the filing date of the application. If 6 months has lapsed from the filing date of this application and the licensee has not received any indication of a secrecy order under 35 U.S.C. 181, the licensee may foreign file the application pursuant to 37 CFR 5.15(b).

UNITED STATES PATENT AND TRADEMARK OFFICE

Commissioner for Patents
United States Patent and Trademark Office
P.O. Box 1450
Alexandria, VA 22313-1450
www.uspto.gov

MAIL

JUL 05 2005

DIRECTOR OFFICE
TECHNOLOGY CENTER 2600

MORRISON & FOESTER, LLP
555 WEST FIFTH STREET
SUITE 3500
LOS ANGELES, CA 90013-1024

In re Application of
BEACHMAN, Keith et al
Application No. 10/956,261
Filed: September 30, 2004
For: **RESSILIENT SWITCH**

DECISION ON REQUEST TO WITHDRAW FROM RECORD

This is a decision on the Request for Withdrawal as attorney or agent and change of address filed on May 16, 2005.

A grantable request to withdraw, as attorney/agent of record must:
(1) Indicate the present mailing address of the attorney(s)/agent(s) who seek(s) to withdraw, and
(2) Be signed by each attorney/agent seeking to withdraw or clearly be signed on their behalf, and
(3) Be *approved* at least thirty (30) days prior to the maximum extendable period for response to any outstanding Office Action, and
(4) Indicate the address to which future correspondence should be mailed.

Petitioner has met all of the above. Accordingly, the request is **GRANTED**.

All attorneys/agents with Customer Number (25224) in the request are withdrawn.

All future communications from the Office will be directed to the address listed below until otherwise notified by applicant. Applicant is reminded of the obligation to promptly notify the Patent and Trademark Office of any change in correspondence address to ensure receipt of all communications from the Office.

Ken A. Wieder
Special Program Examiner
Technology Center 2600
Communications
(571) 272-2986

CC:

BURT MAGEN
VIERRA MAGEN MARCUS HARMON & DENIRO LLP
685 MARKET STREET
SUITE 540
SAN FRANCISCO CA 94105

UNITED STATES PATENT AND TRADEMARK OFFICE

Commissioner for Patents
United States Patent and Trademark Office
P.O. Box 1450
Alexandria, VA 22313-1450
www.uspto.gov

Linda K. Russell
Air Liquide
Suite 1800
2700 Post Oak Blvd.
Houston TX 77056

COPY MAILED

MAR 25 2008

OFFICE OF PETITIONS

| | | |
|---|---|---|
| In re Application of | : | |
| Misra et al. | : | |
| Application No. 10/956,273 | : | DECISION ON PETITION |
| Filed: 10/01/2004 | : | |
| Attorney Docket No. SERIE 6559 | : | |

This is a decision on the petition under 37 CFR 1.137(b), filed December 12, 2007, to revive the above-identified application.

This application became abandoned for failure to timely pay the issue fee and publication fee on or before December 11, 2007, as required by the Notice of Allowance and Fee(s) Due ("Notice of Allowance"), mailed September 11, 2007. Accordingly, this application became abandoned on December 12, 2007.

The provisions of 37 CFR 1.137(b) provide that where the delay in reply was unintentional, a petition may be filed to revive an abandoned application or a lapsed patent pursuant to 37 CFR 1.137(b). A grantable petition pursuant to 37 CFR 1.137(b) must be accompanied by:

(1) The reply required to the outstanding Office action or notice, unless previously filed.

(2) The petition fee as set forth in 37 CFR 1.17(m);

(3) A statement that the entire delay in filing the required reply from the due date for the reply until the filing of a grantable petition was unintentional. The Director may require additional information where there is a question whether the delay was unintentional; and

(4) Any terminal disclaimer (and fee set forth in § 1.20(d)) required pursuant to 37 CFR 1.137(d).

The present petition does not satisfy requirement (1) above.

With the present petition, applicant submitted a Request for Continued Examination (and fee) and an Information Disclosure Statement in response to the Notice of Allowance. However, the record does not reveal that applicant paid the issue fee and publication fee upon filing this petition to revive.

Pursuant to the provisions of 37 CFR 1.137(b)(1) and (c) and in accordance with 35 USC § 151, in an application abandoned for failure to pay the issue fee and the publication fee, or any portion thereof, the required reply must include payment of the issue fee and the publication fee, or any outstanding balance.

Section 711.03(c)(II)(A)(1) of the Manual for Patent Examining Procedure states:

> While the revival of applications abandoned for failure to timely prosecute and for failure to timely pay the issue fee are incorporated together in 37 CFR 1.137, the statutory provisions for the revival of an application abandoned for failure to timely prosecute and for failure to timely submit the issue fee are mutually exclusive. *See Brenner v. Ebbert*, 398 F.2d 762, 157 USPQ 609 (D.C. Cir. 1968). 35 U.S.C. 151 authorizes the acceptance of a delayed payment of the issue fee, if the issue fee "is submitted ... and the delay in payment is shown to have been unavoidable." 35 U.S.C. 41(a)(7) likewise authorizes the acceptance of an "unintentionally delayed payment of the fee for issuing each patent." Thus, 35 U.S.C. 41(a)(7) and 151 each require payment of the issue fee as a condition of reviving an application abandoned or patent lapsed for failure to pay the issue fee. Therefore, the filing of a continuing application without payment of the issue fee or any outstanding balance thereof is not an acceptable reply in an application abandoned or patent lapsed for failure to pay the issue fee or any portion thereof.
>
> ...
>
> In an application abandoned for failure to pay the publication fee, the required reply must include payment of the publication fee. Even if an application abandoned for failure to pay the publication fee is being revived solely for purposes of continuity with a continuing application, the petition to revive under 37 CFR 1.137 must include payment of the publication fee.

In view of the above, the petition under 37 CFR 1.137(b) is **dismissed**.

Any request for reconsideration of this decision must be submitted within TWO (2) MONTHS from the mail date of this decision. Extensions of time under 37 CFR 1.136(a) are permitted. The reconsideration request should include a cover letter entitled "Renewed Petition under 37 CFR 1.137(b)." No additional petition fee is necessary.

With any renewed petition, applicant must pay the issue fee and publication fee as required by the Notice of Allowance. The Office reminds applicant that if the application is later allowed, the return of Part B (Fee(s) Transmittal form) would be considered a request to reapply the previously paid issue fee toward the issue fee that would be due. MPEP 1306.

Further correspondence with respect to this matter should be addressed as follows:

By mail: Mail Stop Petition
Commissioner for Patents
P.O. Box 1450
Alexandria, VA 22313-1450

By FAX: (571) 273-8300
Attn: Office of Petitions

By hand: Customer Service Window
Randolph Building
401 Dulany Street
Alexandria, VA 22314

Correspondence may also be submitted via EFS-Web.

Telephone inquiries related to this decision may be directed to the undersigned at (571) 272-3211.

Christina T. Donnell

Christina Tartera Donnell
Senior Petitions Attorney
Office of Petitions

UNITED STATES PATENT AND TRADEMARK OFFICE

Commissioner for Patents
United States Patent and Trademark Office
P.O. Box 1450
Alexandria, VA 22313-1450
www.uspto.gov

Linda K. Russell
Air Liquide
Suite 1800
2700 Post Oak Blvd.
Houston TX 77056

**COPY MAILED**

MAY 0 5 2008

**OFFICE OF PETITIONS**

| | | |
|---|---|---|
| In re Application of | : | |
| Misra et al. | : | |
| Application No. 10/956,273 | : | DECISION ON PETITION |
| Filed: 10/01/2004 | : | |
| Attorney Docket No. SERIE 6559 | : | |

This is a decision on the petition under 37 CFR 1.137(b), filed April 17, 2008, to revive the above-identified application.

This application became abandoned for failure to timely pay the issue fee and publication fee on or before December 11, 2007, as required by the Notice of Allowance and Fee(s) Due ("Notice of Allowance"), mailed September 11, 2007. Accordingly, this application became abandoned on December 12, 2007.

On December 12, 2007, applicant submitted the original petition under 37 CFR 1.137(b) to revive the application, a Request for Continued Examination (and fee), and an Information Disclosure Statement in response to the Notice of Allowance. However, pursuant to 37 CFR 1.137(b)(1) and (c) and 35 USC § 151, in an application abandoned for failure to pay the issue fee and the publication fee, or any portion thereof, the required reply must include payment of the issue fee and the publication fee, or any outstanding balance. A review of the record did not reveal that applicant paid the issue fee and publication fee upon filing the petition. Accordingly, the petition was dismissed by the decision of March 25, 2008.

On April 17, 2008, petitioner filed the present renewed petition and a Part B-Fee(s) Transmittal, including an authorization to charge the issue fee and publication fee to the Deposit Account. Accordingly, petitioner has met the requirement of 37 CFR 1.137(b). Petitioner submitted the required reply in the form of the issue fee and publication fee, made an appropriate statement of unintentional delay, and previously paid the petition fee. The petition is **GRANTED**.

The Office reminds applicant that if the application is later allowed, the return of Part B (Fee(s) Transmittal form) would be considered a request to reapply the previously paid issue fee toward the issue fee that would be due. MPEP 1306.

This matter is being referred to Technology Center AU 1796 for processing of the RCE and the submission under 37 CFR 1.114.

Telephone inquiries related to this decision may be directed to the undersigned at (571) 272-3211.

Christina Tartera Donnell

Christina Tartera Donnell
Senior Petitions Attorney
Office of Petitions

UNITED STATES PATENT AND TRADEMARK OFFICE

UNITED STATES DEPARTMENT OF COMMERCE
United States Patent and Trademark Office
Address: COMMISSIONER FOR PATENTS
P.O. Box 1450
Alexandria, Virginia 22313-1450
www.uspto.gov

K&L Gates LLP
P.O. Box 1135
CHICAGO, IL 60690

Mail Date: 04/20/2010

| | | |
|---|---|---|
| **Applicant** | : Hans Elias | : DECISION ON REQUEST FOR |
| **Patent Number** | : 7614952 | : RECALCULATION of PATENT |
| **Issue Date** | : 11/10/2009 | : TERM ADJUSTMENT IN VIEW |
| **Appliction No** | : 10/956,278 | : OF WYETH AND NOTICE OF INTENT TO |
| **Filed** | : 10/01/2004 | : ISSUE CERTIFICATE OF CORRECTION |
| | | : |

The Request for Recalculation is **GRANTED** to the extent indicated.

The patent term adjustment has been determined to be **1440** days. The USPTO will *sua sponte* issue a certificate of correction reflecting the amount of PTA days determined by the recalculation.

Prior to the issuance of the certificate of correction, the USPTO will afford patentee an opportunity to be heard and request reconsideration. Accordingly, patentee has **one month or thirty (30) days**, whichever is longer, to file a request for reconsideration of this patent term adjustment calculation. See 35 U.S.C. 154(b)(3)(B)(ii) and 37 CFR 1.322(a)(4). No extensions of time will be granted under 37 CFR 1.136.

Patentee should use document code PET.OP if electronically filing a request for reconsideration of this patent term adjustment calculation. The patentee must also include the information required by 37 CFR 1.705(b)(2) and the fee required by 37 CFR 1.18(e). If patentee does not file a timely request for reconsideration of this patent term adjustment calculation including the information required by 37 CFR 1.705(b)(2) and the fee required by 37 CFR 1.18(e), the USPTO will issue a certificate of correction reflecting the PTA determination noted above.

Patentee should be aware that in order to preserve the right to review in the United States District Court for the District of Columbia of the USPTO patent term adjustment determination, patentee must ensure that he or she also take the steps required under 35 U.S.C. 154(b)(4)(A) in a timely manner. Nothing in the request for recalculation should be construed as providing an alternative time frame for commencing a civil action under 35 U.S.C. 154(b)(4)(A).

Any questions concerning this decision should be directed to the Office of Patent Legal Administration at 571-272-7702.

UNITED STATES PATENT AND TRADEMARK OFFICE

Commissioner for Patents
United States Patent and Trademark Office
P.O. Box 1450
Alexandria, VA 22313-1450
www.uspto.gov

HICKMAN PALERMO TRUONG & BECKER, LLP
2055 GATEWAY PLACE
SUITE 550
SAN JOSE CA 95110

COPY MAILED

MAY 0 8 2009

OFFICE OF PETITIONS

| | | |
|---|---|---|
| In re Application of | : | |
| Dini et al. | : | |
| Application No.: 10/956286 | : | |
| Filing or 371(c) Date: 10/01/2004 | : | DECISION |
| Attorney Docket Number: 50325-0945 | : | ON PETITION |

This is a decision in response to the Petition to Withdraw Holding of Abandonment 37 CFR §1.181(a) – MPEP 711.03(c)I.A. (Failure to Receive Office Action), filed April 3, 2009.

This Petition is hereby **granted**.

The above-identified application became abandoned for failure to timely/properly reply to the Notice of Allowance and Issue Fee Due ("Notice"), mailed November 4, 2008. The Notice set a non-extendable three (3) month period for reply. No response having been received, the application became abandoned on February 5, 2009. A Notice of Abandonment was mailed April 22, 2009.

With the present petition, Applicant has demonstrated non-receipt of the Notice by a preponderance of the evidence.

In view of the foregoing, the petition is granted. The holding of abandonment is hereby withdrawn.

No petition fee has been charged and none is due.

The application will be referred to Technology Center Art Unit 2113 for re-mailing of the Notice of Allowance and Issue Fee Due and Notice of Allowability and for re-starting the period for reply.

Telephone inquiries concerning this matter should be directed to the undersigned at (571) 272-3232.

/Derek L. Woods/
Derek L. Woods
Attorney
Office of Petitions

UNITED STATES PATENT AND TRADEMARK OFFICE

UNITED STATES DEPARTMENT OF COMMERCE
United States Patent and Trademark Office
Address: COMMISSIONER FOR PATENTS
P.O. Box 1450
Alexandria, Virginia 22313-1450
www.uspto.gov

HICKMAN PALERMO TRUONG & BECKER, LLP
2055 GATEWAY PLACE
SUITE 550
SAN JOSE, CA 95110

Mail Date: 06/08/2010

| | | |
|---|---|---|
| **Applicant** | : Cosmin Nicu Dini | : DECISION ON REQUEST FOR |
| **Patent Number** | : 7631225 | : RECALCULATION of PATENT |
| **Issue Date** | : 12/08/2009 | : TERM ADJUSTMENT IN VIEW |
| **Application No** | : 10/956,286 | : OF WYETH AND NOTICE OF INTENT TO |
| **Filed** | : 10/01/2004 | : ISSUE CERTIFICATE OF CORRECTION |
| | | : |

The Request for Recalculation is **GRANTED** to the extent indicated.

The patent term adjustment has been determined to be **1342** days. The USPTO will *sua sponte* issue a certificate of correction reflecting the amount of PTA days determined by the recalculation.

Prior to the issuance of the certificate of correction, the USPTO will afford patentee an opportunity to be heard and request reconsideration. Accordingly, patentee has **one month or thirty (30) days**, whichever is longer, to file a request for reconsideration of this patent term adjustment calculation. See 35 U.S.C. 154(b)(3)(B)(ii) and 37 CFR 1.322(a)(4). No extensions of time will be granted under 37 CFR 1.136.

Patentee should use document code PET.OP if electronically filing a request for reconsideration of this patent term adjustment calculation. The patentee must also include the information required by 37 CFR 1.705(b)(2) and the fee required by 37 CFR 1.18(e). If patentee does not file a timely request for reconsideration of this patent term adjustment calculation including the information required by 37 CFR 1.705(b)(2) and the fee required by 37 CFR 1.18(e), the USPTO will issue a certificate of correction reflecting the PTA determination noted above.

Patentee should be aware that in order to preserve the right to review in the United States District Court for the District of Columbia of the USPTO patent term adjustment determination, patentee must ensure that he or she also take the steps required under 35 U.S.C. 154(b)(4)(A) in a timely manner. Nothing in the request for recalculation should be construed as providing an alternative time frame for commencing a civil action under 35 U.S.C. 154(b)(4)(A).

Any questions concerning this decision should be directed to the Office of Patent Legal Administration at 571-272-7702.

UNITED STATES PATENT AND TRADEMARK OFFICE

Commissioner for Patents
United States Patent and Trademark Office
P.O. Box 1450
Alexandria, VA 22313-1450
www.uspto.gov

DELPHI TECHNOLOGIES, INC.
M/C 480-410-202
PO BOX 5052
TROY MI 48007

**COPY MAILED**

FEB 13 2009

**OFFICE OF PETITIONS**

In re Application of

Feigenbaum, et al. :
:
Application No. 10/956,318
: DECISION ON PETITION
Filed: October 1, 2004
:
Attorney Docket No. DP-311364

This is a decision on the petition under 37 CFR §1.137(b), January 12, 2009, to revive the above-identified application.

The petition is **granted**.

This application became abandoned for failure to timely remit the issue fee of $1440.00 and publication fee of $300.00 as required by the Notice of Allowance and Issue Fee Due (the "Notice") mailed May 3, 2007. The Notice set forth a three (3) month statutory period for reply. No response was received within the allowable period. Accordingly, this application became abandoned on August 4, 2007. A Notice of Abandonment was mailed on January 23, 2008.

The petition fee of $1,620.00 will be charged to deposit account 50-0831.

Form PTOL-85B, filed January 12, 2009, is noted.

The application is being directed to the Office of Data Management for further processing.

Telephone inquiries concerning this decision may be directed to the undersigned at (571) 272-3222.

Kenya A. McLaughlin
Petitions Attorney
Office of Petitions

UNITED STATES PATENT AND TRADEMARK OFFICE

Commissioner for Patents
United States Patent and Trademark Office
P.O. Box 1450
Alexandria, VA 22313-1450
www.uspto.gov

| APPLICATION NUMBER | FILING/RECEIPT DATE | FIRST NAMED APPLICANT | ATTORNEY DOCKET NUMBER |
|---|---|---|---|
| 10/956,322 | 09/30/04 | Fischer | 42P19756 |

**CONFIRMATION NO. 3814**

BLAKELY SOKOLOFF TAYLOR & ZAFMAN
12400 WILSHIRE BOULEVARD
SEVENTH FLOOR
LOS ANGELES CA 90025-1030

Date Mailed: April 7, 2005

## Letter Regarding Petition Under 37 CFR 1.182 Filed With Replacement Drawings

The petition under 37 CFR 1.182 filed November 15, 2004 is acknowledged.

The procedure for submitting replacement drawings by filing a petition under 37 CFR 1.182 and a petition fee has been eliminated. Mail Stop PGPUB Drawings has also been eliminated. The Office may include any replacement drawings filed in compliance with 37 CFR 1.84 and 1.121(d) in the patent application publication if the replacement drawings are entered into the Office file wrapper of the application before technical preparations for publication of the application have begun (generally four months prior to the projected publication date.) See *Changes To Support Implementation of the United States Patent and Trademark Office 21st Century Strategic Plan*, Final Rule, 68 *Fed. Reg.* 56481, 56514-56525 (Sept. 21, 2004).

Accordingly, the replacement drawings filed with the petition under 37 CFR 1.182 may be included in the patent application publication if the drawings are in compliance with 37 CFR 1.84 and 1.121(d) and if they are entered into the Office file wrapper of the application before technical preparations for publication of the application have begun.

If a petition fee or processing fee was submitted with the replacement drawings, then the fee has been refunded.

Telephone inquiries regarding this letter should be directed to the Office of Patent Publication, Pre-Grant Publication Division, 703-605-4283.

Kalethis King
Pre Grant Publication

UNITED STATES PATENT AND TRADEMARK OFFICE

Commissioner for Patents
United States Patent and Trademark Office
P.O. Box 1450
Alexandria, VA 22313-1450
www.uspto.gov

**INTEL CORPORATION**
**C/O CPA GLOBAL**
**P.O. BOX 52050**
**MINNEAPOLIS MN 55402**

**MAILED**

JUL 20 2009

OFFICE OF PETITIONS

In re Application of
Stephen A. FISCHER et al.
Application No. 10/956,322
Filed: September 30, 2004
Attorney Docket No. 42P19756

DECISION ON PETITION

This is a decision on the petition under the unintentional provisions of 37 CFR 1.137(b), filed May 26, 2009, to revive the above-identified application.

The petition is **GRANTED**.

The application became abandoned for failure to reply in a timely manner to the non-compliant notice mailed, June 17, 2008, which set a shortened statutory period for reply of one (1) month. No extensions of time under the provisions of 37 CFR 1.136(a) were obtained. Accordingly, the application became abandoned on July 18, 2008.

The petition satisfies the conditions for revival pursuant to the provisions of 37 CFR 1.137(b) in that (1) the reply in the form of an amendment (2) the petition fee of $1,620.00; and (3) the required statement of unintentional delay have been received. Accordingly, the reply to the non-compliant notice of June 17, 2008, is accepted as having been unintentionally delayed.

Telephone inquiries concerning this decision should be directed to the undersigned at (571) 272-4231.

The application file is being referred to Technology Center AU 2181 for appropriate action on the concurrently filed amendment.

Michelle R. Eason
Paralegal Specialist
Office of Petitions

UNITED STATES PATENT AND TRADEMARK OFFICE

COMMISSIONER FOR PATENTS
UNITED STATES PATENT AND TRADEMARK OFFICE
P.O. BOX 1450
ALEXANDRIA, VA 22313-1450
www.uspto.gov

WELSH & KATZ, LTD.
DANIEL M. GURFINKEL
22ND FLOOR
120 SOUTH RIVERSIDE PLAZA
CHICAGO, IL 60606

COPY MAILED

MAY 06 2008

OFFICE OF PETITIONS

| | | |
|---|---|---|
| In re Application of | : | |
| Nicolas Bruno Chudoba, et al. | : | |
| Application No. 10/956,324 | : | ON PETITION |
| Filed: October 1, 2004 | : | |
| Attorney Docket No. 9547-92962 | : | |

This is a decision on the petition under 37 CFR 1.137(b), filed January 28, 2008, to revive the above-identified application.

The petition is **GRANTED**.

The application became abandoned for failure to timely file a reply within the meaning of 37 CFR 1.113 to the final Office action of April 19, 2007. A Notice of Abandonment was mailed on November 21, 2007. The proposed reply required for consideration of a petition to revive must be a Notice of Appeal (and appeal fee required by 37 CFR 41.20(b)(2), an amendment that *prima facie* places the application in condition for allowance, a Request for Continued Examination and submission (37 CFR 1.114), or the filing of a continuing application under 37 CFR 1.53(b). See MPEP 711.03(c)(II)(A)(2).

The petition satisfies the requirements of 37 CFR 1.137(b) in that petitioner has supplied (1) the reply in the form of a Request for Continued Examination (RCE), including the fee of $405 and the submission required by 37 CFR 1.114; (2) the petition fee of $770; and (3) an adequate statement of unintentional delay.

The application is being referred to Technology Center AU 3781 for processing of the RCE and for appropriate action by the Examiner in the normal course of business on the amendment submitted in accordance with 37 CFR 1.114.

Telephone inquiries concerning this decision should be directed to the undersigned at (571) 272-3204. Inquiries relating to further prosecution should be directed to the Technology Center.

Sherry D. Brinkley
Petitions Examiner
Office of Petitions

PTO/SB/66 (03-09)
Approved for use through 03/31/2012. OMB 0651-0016
U.S. Patent and Trademark Office: U.S. DEPARTMENT OF COMMERCE
Under the Paperwork Reduction Act of 1995, no persons are required to respond to a collection of information unless it displays valid OMB control number.

# PETITION TO ACCEPT UNINTENTIONALLY DELAYED PAYMENT OF MAINTENANCE FEE IN AN EXPIRED PATENT (37 CFR 1.378(c))

| Patent Number | Issue Date (YYYY-MM-DD) | Application Number | Filing Date (YYYY-MM-DD) | Docket Number (if applicable) |
|---|---|---|---|---|
| 6976462 | 2005-12-20 | 10956332 | 2004-10-04 | 20552-0431 |

CAUTION: Maintenance fee (and surcharge, if any) payment must correctly identify: (1) the patent number and (2) the application number of the actual U.S. application leading to issuance of that patent to ensure the fee(s) is/are associated with the correct patent. 37 CFR 1.366(c) and (d).

SMALL ENTITY
☒ Patentee claims, or has previously claimed, small entity status. See 37 CFR 1.27.

LOSS OF ENTITLEMENT TO SMALL ENTITY STATUS
☐ Patentee is no longer entitled to small entity status. See 37 CFR 1.27(g)

| NOT Small Entity | | Small Entity | |
|---|---|---|---|
| Fee | Code | Fee | Code |
| ○ 3 ½ year | (1551) | ◉ 3 ½ year | (2551) |
| ○ 7 ½ year | (1552) | ○ 7 ½ year | (2552) |
| ○ 11 ½ year | (1553) | ○ 11 ½ year | (2553) |

SURCHARGE
The surcharge required by 37 CFR 1.20(i)(2) (Fee Code 1558) must be paid as a condition of accepting unintentionally delayed payment of the maintenance fee.

MAINTENANCE FEE (37 CFR 1.20(e)-(g))
The appropriate maintenance fee must be submitted with this petition.

STATEMENT
THE UNDERSIGNED CERTIFIES THAT THE DELAY IN PAYMENT OF THE MAINTENANCE FEE TO THIS PATENT WAS UNINTENTIONAL

PETITIONER(S) REQUEST THAT THE DELAYED PAYMENT OF THE MAINTENANCE FEE BE ACCEPTED AND THE PATENT REINSTATED

THIS PORTION MUST BE COMPLETED BY THE SIGNATORY OR SIGNATORIES

37 CFR 1.378(d) states: "Any petition under this section must be signed by an attorney or agent registered to practice before the Patent and Trademark Office, or by the patentee, the assignee, or other party in interest."

I certify, in accordance with 37 CFR 1.4(d)(4) that I am

◉ An attorney or agent registered to practice before the Patent and Trademark Office

○ A sole patentee

○ A joint patentee; I certify that I am authorized to sign this submission on behalf of all the other patentees.

○ A joint patentee; all of whom are signing this e-petition

○ The assignee of record of the entire interest

| Patent Practitioner | | | |
|---|---|---|---|
| A signature of the applicant or representative is required in accordance with 37 CFR 1.33 and 10.18. Please see 37 CFR 1.4(d) for the form of the signature | | | |
| Signature | /TIMOTHY J. KLIMA/ | Date (YYYY-MM-DD) | 2010-01-11 |
| Name | Timothy J. Klima | Registration Number | 34852 |

This collection of information is required by 37 CFR 1.378(c). The information is required to obtain or retain a benefit by the public which is to file (and by the USPTO to process) an application. Confidentiality is governed by 35 U.S.C. 122 and 37 CFR 1.11 and 1.14. This collection is estimated to take 1 hour to complete, including gathering, preparing, and submitting the completed application form to the USPTO. Time will vary depending upon the individual case. Any comments on the amount of time you require to complete this form and/ or suggestions for reducing this burden, should be sent to the Chief Information Officer, U.S. Patent and Trademark Office, U.S. Department of Commerce, P.O. Box 1450, Alexandria, VA 22313-1450. DO NOT SEND FEES OR COMPLETED FORMS TO THIS ADDRESS. **This form can only be used when in conjunction with EFS-Web. If this form is mailed to the USPTO, it may cause delays in reinstating the patent.**

# Privacy Act Statement

The Privacy Act of 1974 (P.L. 93-579) requires that you be given certain information in connection with your submission of the attached form related to a patent application or patent. Accordingly, pursuant to the requirements of the Act, please be advised that: (1) the general authority for the collection of this information is 35 U.S.C. 2(b)(2); (2) furnishing of the information solicited is voluntary; and (3) the principal purpose for which the information is used by the U.S. Patent and Trademark Office is to process and/or examine your submission related to a patent application or patent. If you do not furnish the requested information, the U.S. Patent and Trademark Office may not be able to process and/or examine your submission, which may result in termination of proceedings or abandonment of the application or expiration of the patent.

The information provided by you in this form will be subject to the following routine uses:

1. The information on this form will be treated confidentially to the extent allowed under the Freedom of Information Act (5 U.S.C. 552) and the Privacy Act (5 U.S.C. 552a). Records from this system of records may be disclosed to the Department of Justice to determine whether the Freedom of Information Act requires disclosure of these records.

2. A record from this system of records may be disclosed, as a routine use, in the course of presenting evidence to a court, magistrate, or administrative tribunal, including disclosures to opposing counsel in the course of settlement negotiations.

3. A record in this system of records may be disclosed, as a routine use, to a Member of Congress submitting a request involving an individual, to whom the record pertains, when the individual has requested assistance from the Member with respect to the subject matter of the record.

4. A record in this system of records may be disclosed, as a routine use, to a contractor of the Agency having need for the information in order to perform a contract. Recipients of information shall be required to comply with the requirements of the Privacy Act of 1974, as amended, pursuant to 5 U.S.C. 552a(m).

5. A record related to an International Application filed under the Patent Cooperation Treaty in this system of records may be disclosed, as a routine use, to the International Bureau of the World Intellectual Property Organization, pursuant to the Patent Cooperation Treaty.

6. A record in this system of records may be disclosed, as a routine use, to another federal agency for purposes of National Security review (35 U.S.C. 181) and for review pursuant to the Atomic Energy Act (42 U.S.C. 218(c)).

7. A record from this system of records may be disclosed, as a routine use, to the Administrator, General Services, or his/her designee, during an inspection of records conducted by GSA as part of that agency's responsibility to recommend improvements in records management practices and programs, under authority of 44 U.S.C. 2904 and 2906. Such disclosure shall be made in accordance with the GSA regulations governing inspection of records for this purpose, and any other relevant (i.e., GSA or Commerce) directive. Such disclosure shall not be used to make determinations about individuals.

8. A record from this system of records may be disclosed, as a routine use, to the public after either publication of the application pursuant to 35 U.S.C. 122(b) or issuance of a patent pursuant to 35 U.S.C. 151. Further, a record may be disclosed, subject to the limitations of 37 CFR 1.14, as a routine use, to the public if the record was filed in an application which became abandoned or in which the proceedings were terminated and which application is referenced by either a published application, an application open to public inspections or an issued patent.

9. A record from this system of records may be disclosed, as a routine use, to a Federal, State, or local law enforcement agency, if the USPTO becomes aware of a violation or potential violation of law or regulation.

# UNITED STATES PATENT AND TRADEMARK OFFICE

Commissioner for Patents
United States Patent and Trademark Office
P.O. Box 1450
Alexandria, VA 22313-1450
www.uspto.gov

In re Patent No. 6976462
Issue Date: December 20,2005
Application No. 10956332
Filed: October 4,2004
Attorney Docket No. 2552-0431

:
:DECISION GRANTING PETITION
:UNDER 37 CFR 1.378(c)
:

This is a decision on the electronic petition, filed January 11,2010 ,under 37 CFR 1.378(c) to accept the unintentionally delayed payment of the 3.5 year maintenance fee for the above-identified patent.

The petition is **GRANTED**.

The maintenance fee is accepted, and the above-identified patent reinstated as of January 11,2010 .
This decision also constitutes notice that the fee has been accepted. An electronic copy of the petition and this decision has been created as an entry in the Image File Wrapper. Nevertheless, petitioner should print and retain an independent copy.

Telephone inquiries related to this electronic decision should be directed to the Electronic Business Center at 1-866-217-9197.

UNITED STATES PATENT AND TRADEMARK OFFICE

Commissioner for Patents
United States Patent and Trademark Office
P.O. Box 1450
Alexandria, VA 22313-1450
www.uspto.gov

DOUGLAS S. JOHNSON
OF DENNISON ASSOCIATES
SUITE 301
133 RICHMOND ST., W.
TORONTO ON M5H 2L7 CA CANADA

COPY MAILED
MAR 17 2008
OFFICE OF PETITIONS

| | | |
|---|---|---|
| In re Application of | : | |
| Angelo Gabriele | : | |
| Application No. 10/956,340 | : | DECISION GRANTING PETITION |
| Filed: October 4, 2004 | : | UNDER 37 CFR 1.137(b) |
| Attorney Docket No. SWH 12180-1US | : | |

This is a decision on the petition under 37 CFR 1.137(b), filed July 27, 2007, to revive the above-identified application.

The petition is **GRANTED**.

The petition satisfies the conditions for revival pursuant to the provisions of 37 CFR 1.137(b) in that (1) the reply in the form of corrected drawings; (2) the petition fee; and (3) the required statement of unintentional delay have been received. Accordingly, the reply to the Notice of Allowance/Notice of Allowability of April 23, 2007, is accepted as having been unintentionally delayed.

Telephone inquiries concerning this decision should be directed to the undersigned at (571) 272-3208.

This matter is being referred to the Office of Data Management and for review of the drawings submitted July 27, 2007 and resubmitted on September 13, 2007.

Karen Creasy
Petitions Examiner
Office of Petitions

DATE 6/26/08

APPLICATION NUMBER 10/956,34

DOC CODE XRUSH

DOC DATE

DELIVER THE ATTACHED FIFLE/DOCUMENT TO THE TC SCANNING CENTER

CONTRACTOR: THE ATTACHED FILE/DOCUMENT MUST BE INDEXED AND SCANNED INTO IFW WITHIN 8 WORK HOURS; UPLOADING OF THE SCANNED IMAGES SHOULD OCCUR NO LATER THAN 16 WORK HOURS FOLLOWING RECEIPT OF THIS REQUEST

AFTER SCANNING, ORIGINAL DOCUMENTS SHOULD BE BOXED IN ACCORDANCE WITH INSTRUCTIONS

## SPE RESPONSE FOR CERTIFICATE OF CORRECTION

**Paper No.:** —

**DATE** : 6/16/08

**TO SPE OF** : ART UNIT 1633

**SUBJECT** : Request for Certificate of Correction for Appl. No.: 10/956348 Patent No: 7267955B2

A response is requested with respect to a request for a certificate of correction.

With respect to the change(s) requested to correct Office and/or Applicant's errors, should the patent read as shown in the certificate of correction attached herewith or the COCIN document(s), in IFW images for the above-identified patented application? No new matter should be introduced, nor should the scope or meaning of the claims be changed.

If the response is for an IFW, within 7 days, please complete and forward the response, to the employee (named below) via scanning into application images, using document code **COCX**.

If the response is for a paper file wrapper, please complete the response and forward the response with the paper file wrapper, to the employee (named below), within 7 days, to:

**Certificates of Correction Branch (CofC)**
**South Tower - 9A22**
**Palm Location 7580**

*VIRGINIA TOLBERT*
**Certificates of Correction Branch**
**703-308-9390 ext. 113**

**Thank You For Your Assistance**

**The request for issuing the above-identified correction(s) is hereby:**
Note your decision on the appropriate box.

- ☑ Approved — All changes apply.
- ☐ Approved in Part — Specify below which changes **do not** apply.
- ☐ Denied — State the reasons for denial below.

**Comments:** _____

SPE — 1636 Art Unit

UNITED STATES PATENT AND TRADEMARK OFFICE

Commissioner for Patents
United States Patent and Trademark Office
P.O. Box 1450
Alexandria, VA 22313-1450
www.uspto.gov

**BRIAN R. RAYVE**
**161 MAPLE DRIVE**
**PARK CITY, UT 84098**

**COPY MAILED**

AUG 15 2007

**OFFICE OF PETITIONS**

In re Application of :
Richard J. Sitarz :
Application No. 10/956,358 : DECISION ON PETITION
Filed: September 30, 2004 :
Attorney Docket No. 040-1-001 :

This is a decision on the petition under 37 CFR 1.137(b), filed November 22, 2006, to revive the above-identified application.

The petition is **GRANTED.**

The application became abandoned for failure to reply in a timely manner to the Notice to File Missing Parts of Nonprovisional Application (Notice), mailed November 15, 2004. The Notice set a period for reply of two (2) months from the mail date of the Notice. No extensions of time were obtained under the provisions of 37 CFR 1.136(a). Accordingly, the application became abandoned on January 16, 2005. A Notice of Abandonment was mailed on August 18, 2005.

The petition satisfies the requirements of 37 CFR 1.137(b) in that petitioner has supplied (1) the required reply in the form of the items required by the Notice of November 15, 2004, (2) the petition fee of $750, and (3) a proper statement of unintentional delay. Accordingly, the failure to timely reply to the Notice of November 15, 2004 is accepted as being unintentionally delayed.

This application is being referred to the Office of Initial Patent Examination for further processing in accordance with this decision.

Telephone inquiries concerning this decision should be directed to the undersigned at (571) 272-3218.

Frances Hicks
Petitions Examiner
Office of Petitions

UNITED STATES PATENT AND TRADEMARK OFFICE

Commissioner for Patents
United States Patent and Trademark Office
P.O. Box 1450
Alexandria, VA 22313-1450
www.uspto.gov

**BRIAN R. RAYVE**
**161 MAPLE DRIVE**
**PARK CITY UT 84098**

**COPY MAILED**

NOV 13 2008

| | | |
|---|---|---|
| In re Application of | : | |
| Richard J. Sitarz | : | CORRECTED DECISION |
| Application No. 10/956,358 | : | ON PETITION |
| Filed: September 30, 2004 | : | |
| Attorney Docket No. 040-1-001 | : | |

This is a decision on the petition under 37 CFR 1.137(b), filed November 22, 2006, to revive the above-identified application.

The petition decision mailed August 15, 2007 is vacated.

The petition is **DISMISSED**.

Any request for reconsideration of this decision must be submitted within TWO (2) MONTHS from the mail date of this decision. Extensions of time under 37 CFR 1.136(a) are permitted. The reconsideration request should include a cover letter entitled "Renewed Petition under 37 CFR 1.137(b)." This is **not** a final agency action within the meaning of 5 U.S.C. § 704.

The above-identified application became abandoned for failure to submit a timely response to the Notice to File Missing parts of Nonprovisional Application (Notice) mailed November 15, 2004 which set a period for reply of two (2) months. Accordingly, by operation of law, the above-identified application became abandoned on January 16, 2005.

A grantable petition under 37 CFR 1.137(b) must be accompanied by: (1) the required reply, unless previously filed; (2) the petition fee as set forth in 37 CFR 1.17(m); and (3) a statement that the entire delay in filing the required reply from the due date for the reply until the filing of a grantable petition pursuant to 37 CFR 1.137(b) was unintentional. Where there is a question as to whether either the abandonment or the delay in filing a petition under 37 CFR 1.137 was unintentional, the Commissioner may require additional information. See MPEP 711.03(c)(III)(C) and (D). The instant petition lacks item (1).

The petition includes a fee of $405 for 45 additional claims over 20. However, at the time the petition was filed, the fee for the 45 additional claims over 20 had been increased and the new fee was $1,125 ($25 per claim over 20). Petitioner provides $405 for the additional claim fees and deducting that amount from the total claim fee leaves a balance of $720 due.

Further correspondence with respect to this matter should be addressed as follows:

By Mail: Mail Stop PETITION
Commissioner for Patents
P. O. Box 1450
Alexandria, VA 22313-1450

By hand: U. S. Patent and Trademark Office
Customer Service Window, Mail Stop Petitions
Randolph Building
401 Dulany Street
Alexandria, VA 22314

The centralized facsimile number is **(571) 273-8300.**

Telephone inquiries concerning this decision should be directed to the Carl Friedman at (571) 272-6842.

Carl Friedman
Petitions Examiner
Office of Petitions

UNITED STATES PATENT AND TRADEMARK OFFICE

Commissioner for Patents
United States Patent and Trademark Office
P.O. Box 1450
Alexandria, VA 22313-1450
www.uspto.gov

HOWREY LLP
C/O IP DOCKETING DEPARTMENT
2941 FAIRVIEW PARK DRIVE, SUITE 200
FALLS CHURCH, VA 22042-2924

MAILED

MAR 22 2010

OFFICE OF PETITIONS

In re Patent No. 7,061,662 :
Issue Date: June 13, 2006 :
Application No. 10/956,367 : NOTICE
Filed: October 1, 2004 :
Attorney Docket No. 07783.0091.NPUS01

This is a notice regarding your request for acceptance of a fee deficiency submission under 37 CFR 1.28. On September 1, 1998, the Court of Appeals for the Federal Circuit held that 37 CFR 1.28(c) is the sole provision governing the time for correction of the erroneous payment of the issue fee as a small entity. **See DH Technology v. Synergystex International, Inc. 154 F.3d 1333, 47 USPQ2d 1865 (Fed. Cir. Sept. 1, 1998).**

The Office no longer investigates or rejects original or reissue applications under 37 CFR 1.56. **1098 Off. Gaz. Pat. Office 502 (January 3, 1989).** Therefore, nothing in this Notice is intended to imply that an investigation was done.

Your fee deficiency submission under 37 CFR 1.28 is hereby **ACCEPTED**.

Inquiries related to this communication should be directed to Irvin Dingle at (571) 272-3210.

Irvin Dingle
Petitions Examiner
Office of Petitions

UNITED STATES PATENT AND TRADEMARK OFFICE

Commissioner for Patents
United States Patent and Trademark Office
P.O. Box 1450
Alexandria, VA 22313-1450
www.uspto.gov

Steven S. Payne
Suite 1005
1101 17th Street N.W.
Washington, DC 20036

COPY MAILED

MAY 13 2005

OFFICE OF PETITIONS

In re Application of :
Jan Arlemark :
Application No. 10/956,369 : DECISION REFUSING STATUS
Filed: October 4, 2004 : UNDER 37 CFR 1.47(b)
Attorney Docket No. 150-186 :
**For:** METHOD AND DEVICE AT AN OZONE GENERATOR UNIT

This is a decision on the petition under 37 CFR 1.47(b), filed April 6, 2005.

The petition under 37 CFR 1.47(b) is **dismissed.**

Any request for reconsideration under this decision must be submitted within TWO (2) MONTHS from the mail date of this decision. Extensions of time under 37 CFR 1.136(a) are permitted. Failure to respond will result in the abandonment of this application. Any response should be titled "Request for Reconsideration of Petition Under 37 CFR 1.47(b).

The above-identified application was filed on October 4, 2004, without an executed oath or declaration or filing fee. Accordingly, a "Notice to File Missing Parts Nonprovisional Application" (the "Notice") was mailed on January 3, 2005, requiring an executed oath or declaration and a surcharge for the late filing of the oath or declaration, and payment of the filing. The instant petition was filed on April 6, 2005, with a request for an extension of time within the first month.

A grantable petition under 37 CFR 1.47(b) requires:

(1) proof that the non-signing inventor(s) cannot be reached or refuses to sign the oath or declaration after having been presented with the application papers (specification, claims, and drawings);

(2) an acceptable oath or declaration in compliance with 35 U.S.C. §§ 115 and 116;

(3) the petition fee

(4) a statement of the last known address of the non-signing inventor,

(5) proof of proprietary interest, and

(6) a showing (statement) that such action is necessary to preserve the rights of the parties or to prevent irreparable damage.

The instant petition lacks items (2), (5), and (6) as set forth above.

As to item (2), the declaration filed is not executed by an authorized party. Section 409.03(b) of the *Manual of Patent Examining Procedure* ("MPEP") states, in pertinent part, that:

> [t]he 37 CFR 1.47(b) applicant must make the oath required by 37 CFR 1.63 and 1.64 or 1.175. Where a corporation is the 37 CFR 1.47(b) applicant, an officer (President, Vice-President, Secretary, Treasurer, or Chief Executive Officer) thereof should normally sign the necessary oath or declaration. A corporation may authorize any person including an attorney or agent registered to practice before the US Patent and Trademark Office, to sign the application oath or declaration on its behalf. Where an oath is signed by a registered attorney or agent on behalf of a corporation, either proof of the attorney's or agent's authority in the form of a statement signed by an appropriate corporate officer must be submitted, or the attorney or agent may simply state that he or she is authorized to sign on behalf of the corporation.

The declaration filed is not executed by anyone. A signature of an authorized corporate official, attorney or agent, is necessary in order for the declaration to be considered valid. Petitioner is also cautioned to adhere to the guidance provided in Section 409.03(b) relative to establishing that person signing the declaration is, in fact, authorized to make the representations on behalf of the company.

Further as to item (2), the declaration filed with the instant petition cannot be accepted until the assignee demonstrates that it has the power to prosecute the application. Section 409.03(b) of the *Manual of Patent Examining Procedure* provides, in pertinent part, that, "[w]here the oath or declaration is being signed on behalf of an assignee, see MPEP 324." Section 324 of the Manual of Patent Examining Procedure cites 37 CFR 3.71(c) which states that, "[a]n assignee becomes of record either in a national patent application or a reexamination proceeding by filing a statement in compliance with 3.73(b) that is signed by a party who is authorized to act on behalf of the assignee." Petitioner should note that 37 CFR 3.73 requires that before an assignee can take action in a patent matter, the assignee must establish ownership of the patent property in accordance with 37 CFR 3.73(b)(1)(i) or (ii). No statement or certificate meeting the requirements of 37 CFR 3.73 was found with the petition. Petitioner must properly establish ownership of the patent property before the assignee will be granted authority under 37 CFR 1.47(b) to prosecute the application. Enclosed is a "Statement Under 37 CFR 3.73(b)" that petitioner may use to satisfy this requirement.

As to item (6), petitioner has not established that a filing date is necessary to preserve the rights of the party or prevent irreparable harm. This showing may be made by a statement to that effect and should accompany any renewed petition filed. *See MPEP* 409.03(g).

Further correspondence with respect to this matter should be addressed as follows:

By mail: Mail Stop Petitions
Commissioner for Patents
P.O. Box 1450
Alexandria, VA 22313-1450

By FAX: (703) 872-9306
Attn: Office of Petitions

Telephone inquiries should be directed to the undersigned at (571) 272-3222.

Kenya A. McLaughlin
Petitions Attorney
Office of Petitions

Enclosure: Form PTO/SB/96—"Statement Under 37 CFR 3.73(b)"

UNITED STATES PATENT AND TRADEMARK OFFICE

Commissioner for Patents
United States Patent and Trademark Office
P.O. Box 1450
Alexandria, VA 22313-1450
www.uspto.gov

Steven S. Payne
Suite 1005
1101 17th Street N.W.
Washington, DC 20036

**COPY MAILED**

OCT 28 2005

**OFFICE OF PETITIONS**

In re Application of :
Jan Arlemark :
Application No. 10/956,369 : DECISION REFUSING STATUS
Filed: October 4, 2004 : UNDER 37 CFR 1.47(b)
Attorney Docket No. 150-186 :
**For:** METHOD AND DEVICE AT AN OZONE GENERATOR UNIT

This is a decision on the renewed petition under 37 CFR 1.47(b), filed October 14, 2005.

The renewed petition under 37 CFR 1.47(b) is **dismissed.**

Any request for reconsideration under this decision must be submitted within TWO (2) MONTHS from the mail date of this decision. Extensions of time under 37 CFR 1.136(a) are permitted. Failure to respond will result in the abandonment of this application. Any response should be titled "Request for Reconsideration of Petition Under 37 CFR 1.47(b).

The above-identified application was filed on October 4, 2004, without an executed oath or declaration or filing fee. Accordingly, a "Notice to File Missing Parts Nonprovisional Application" (the "Notice") was mailed on January 3, 2005, requiring an executed oath or declaration and a surcharge for the late filing of the oath or declaration, and payment of the filing. A petition under 37 CFR 1.47(b) was filed on April 6, 2005, with a request for an extension of time within the first month. The petition was dismissed by a decision mailed May 13, 2005. The instant renewed petition was filed on October 14, 2005 (certificate of mailing dated October 13, 2005) with a request for an extension of time within the third month.

A grantable petition under 37 CFR 1.47(b) requires:

(1) proof that the non-signing inventor(s) cannot be reached or refuses to sign the oath or declaration after having been presented with the application papers (specification, claims, and drawings);

(2) an acceptable oath or declaration in compliance with 35 U.S.C. §§ 115 and 116;

(3) the petition fee

(4) a statement of the last known address of the non-signing inventor,

(5) proof of proprietary interest, and

(6) a showing (statement) that such action is necessary to preserve the rights of the parties or to prevent irreparable damage.

The instant petition lacks item (2) set forth above.

As to item (2), the declaration filed is improper. Section 409.03(b) of the *Manual of Patent Examining Procedure* ("MPEP") states, in pertinent part, that "[w]here an application is executed by one other than the inventor, the declaration required by 37 CFR 1.63 must state the full name, residence, post office address, and citizenship of the non-signing inventor. Also, the title or position of the person signing must be stated if signing on behalf of a corporation under 37 CFR 1.47(b)." The declaration filed only contains a signature block for the 37 CFR 1.47(b) applicant. Under these circumstances, a proper declaration under 37 CFR 1.63 must contain a blank signature block for the non-signing inventor with all of the pertinent information stated above followed by a signature block for the authorized representative of the 37 CFR 1.47(b) applicant. The second renewed petition must be accompanied by a declaration meeting these requirements.

Further correspondence with respect to this matter should be addressed as follows:

By mail: Mail Stop Petitions
Commissioner for Patents
P.O. Box 1450
Alexandria, VA 22313-1450

By FAX: (571)273-8300
Attn: Office of Petitions

Telephone inquiries should be directed to the undersigned at (571) 272-3222.

Kenya A. McLaughlin

Kenya A. McLaughlin
Petitions Attorney
Office of Petitions

UNITED STATES PATENT AND TRADEMARK OFFICE

Commissioner for Patents
United States Patent and Trademark Office
P.O. Box 1450
Alexandria, VA 22313-1450
www.uspto.gov

Steven S. Payne
Suite 1005
1101 17th Street N.W.
Washington, DC 20036

COPY MAILED
MAY 1 8 2006
OFFICE OF PETITIONS

| | |
|---|---|
| In re Application of | : |
| Jan Arlemark | : |
| Application No. 10/956,369 | : DECISION ACCORDING STATUS |
| Filed: October 4, 2004 | : UNDER 37 CFR 1.47(b) |
| Attorney Docket No. 150-186 | : |

**For:** METHOD AND DEVICE AT AN OZONE GENERATOR UNIT

This is in response to the second renewed petition under 37 CFR 1.47(b), filed May 2, 2006 (certificate of mailing dated April 28, 2006).

The second renewed petition is **GRANTED**.

The above-identified application and papers have been reviewed and found in compliance with 37 CFR 1.47(b). This application is hereby accorded Rule 1.47(b) status.

The above-identified application was filed on October 4, 2004, without an executed oath or declaration or filing fee. Accordingly, a "Notice to File Missing Parts Nonprovisional Application" (the "Notice") was mailed on January 3, 2005, requiring an executed oath or declaration and a surcharge for the late filing of the oath or declaration, and payment of the filing. A petition under 37 CFR 1.47(b) was filed on April 6, 2005, with a request for an extension of time within the first month. The petition was dismissed by a decision mailed May 13, 2005. A renewed petition was filed on October 14, 2005 (certificate of mailing dated October 13, 2005) with a request for an extension of time within the third month. The renewed petition was dismissed by a decision mailed October 28, 2005. The instant second renewed petition was filed on May 2, 2006, with a request for an extension of time within the fourth month.

By the instant petition and evidentiary documents, petitioner has established that the sole inventor has refused to join the prosecution of the application and that the 37 CFR 1.47(b) applicant has sufficient proprietary interest to proceed with prosecution of the application without the sole inventor.

As provided in Rule 1.47(c), this Office will forward notice of this application's filing to the non-signing inventor at the address given in the petition. Notice of the filing of this application will also be published in the Official Gazette.

This application will be forwarded to the Office of Initial Patent Examination for further processing.

Telephone inquiries concerning this decision should be directed to the undersigned at (571) 272-3222.

Kenya A. McLaughlin
Petitions Attorney
Office of Petitions

UNITED STATES PATENT AND TRADEMARK OFFICE

COMMISSIONER FOR PATENTS
UNITED STATES PATENT AND TRADEMARK OFFICE
P.O. BOX 1450
ALEXANDRIA, VA 22313-1450
WWW.USPTO.GOV

Paper No. None

Stephen J. Scribner
PARTEQ Innovations
Biosciences Complex, Room 1625
Queen's University
Kingston ON K7L 3N6 CA CANADA

COPY MAILED
SEP 1 1 2006
OFFICE OF PETITIONS

| | |
|---|---|
| In re Application of<br>Stephen J. Harrison<br>Application No. 10/956,370<br>Filing Date: October 4, 2004<br>Attorney Docket Number: 2000-020-11US<br>Title: PASSIVE BACK-FLUSHING THERMAL ENERGY SYSTEM | DECISION ON PETITION UNDER 37 C.F.R. § 1.137(B) |

This is a decision on the petition under 37 CFR §1.137(b)[1], filed June 22, 2006, to revive the above-identified application.

The above-identified application became abandoned for failure to reply in a timely manner to the non-final Office action, mailed October 5, 2005, which set a shortened statutory period for reply of three months. No response was received, and no extensions of time under the provisions of 37 C.F.R. §1.136(a) were requested. Accordingly, the above-identified application became abandoned on January 6, 2006. A notice of abandonment was mailed on April 14, 2006.

With the present petition, Petitioner has submitted the petition fee, the proper statement of unintentional delay, and an amendment. A terminal disclaimer is not necessary.

---

1 A grantable petition pursuant to 37 CFR 1.137(b) must be accompanied by:
(1) The reply required to the outstanding Office action or notice, unless previously filed;
(2) The petition fee as set forth in § 1.17(m);
(3) A statement that the entire delay in filing the required reply from the due date for the reply until the filing of a grantable petition pursuant to this paragraph was unintentional. The Commissioner may require additional information where there is a question whether the delay was unintentional, and;
(4) Any terminal disclaimer (and fee as set forth in § 1.20(d)) required pursuant to paragraph (d) of this section.

Petitioner has met all requirements for a grantable petition under 37 C.F.R. §1.137(b). As such, the petition is **GRANTED**.

The Technology Center will be notified of this decision. The Technology Center's support staff will notify the Examiner of this decision, so that the amendment which was received with the present petition can be processed.

The general phone number for the Office of Petitions which should be used for status requests is (571) 272-3282. Telephone inquiries regarding this decision should be directed to the undersigned at (571) 272-3225.

Paul Shanoski
Senior Attorney
Office of Petitions
United States Patent and Trademark Office

UNITED STATES PATENT AND TRADEMARK OFFICE

Commissioner for Patents
United States Patent and Trademark Office
P.O. Box 1450
Alexandria, VA 22313-1450
www.uspto.gov

Barbara B. Courtney
Shemwell Gregory & Courtney LLP
4880 Stevens Creek Blvd., Suite 201
San Jose, CA 95129

COPY MAILED

AUG 0 9 2005

OFFICE OF PETITIONS

| | | |
|---|---|---|
| In re Application of | : | |
| Lixin Sun, et al. | : | |
| Application No. 10/956,380 | : | DECISION ON PETITION |
| Filed: October 1, 2004 | : | UNDER 37 CFR 1.78(a)(3) |
| Attorney Docket No. UNIT.P001 | : | |

This is a decision on the petition under 37 CFR 1.78(a)(3), filed February 14, 2005, to accept an unintentionally delayed claim under 35 U.S.C. §§ 120 and 365(c) for the benefit of priority to prior-filed PCT Application No. PCT/CN03/00076, filed January 27, 2003, set forth in the amendment submitted concurrently with the instant petition.

The petition is **GRANTED.**

A petition for acceptance of a claim for late priority under 37 CFR 1.78(a)(3) is only applicable to those applications filed on or after November 29, 2000. Further, the petition is appropriate only after the expiration of the period specified in 37 CFR 1.78(a)(2)(ii). In addition, the petition under 37 CFR 1.78(a)(3) must be accompanied by:

**(1)** the reference required by 35 U.S.C. § 120 and 37 CFR 1.78(a)(2)(i) of the prior-filed application, unless previously submitted;

**(2)** the surcharge set forth in § 1.17(t); and

**(3)** a statement that the entire delay between the date the claim was due under 37 CFR 1.78(a)(2)(ii) and the date the claim was filed was unintentional. The Commissioner may require additional information where there is a question whether the delay was unintentional.

All the above requirements having been satisfied, the late claim for priority under 35 U.S.C. §§ 120 and 365(c) is accepted as being unintentionally delayed.

***The granting of the petition to accept the delayed benefit claim to the prior-filed application under 37 CFR 1.78(a)(3) should not be construed as meaning that the application is entitled to the benefit of the prior-filed application. In order for the application to be entitled to the benefit of the prior-filed application, all other requirements under 35 U.S.C. §§ 120 and 365(c) and 37 CFR 1.78(a)(1) and (a)(2) must be met. Similarly, the fact that the corrected Filing Receipt accompanying this decision on petition includes the prior-filed application should not be construed as meaning that applicant is entitled to the claim for benefit of priority to the prior-filed application noted thereon. Accordingly, the examiner will, in due course, consider this benefit claim and determine whether the application is entitled to the benefit of the earlier filing date.***

A corrected Filing Receipt, which includes the priority claim to the prior-filed application, accompanies this decision on petition.

Any inquiries concerning this decision may be directed to Marianne Jenkins at (571) 272-3223. All other inquiries concerning either the examination procedures or status of the application should be directed to the Technology Center.

This application is being forwarded to the examiner of Technology Center Art Unit 2661 for appropriate action on the amendment filed February 14, 2005, including consideration of applicant's entitlement to claim benefit of priority under 35 U.S.C. §§ 120 and 365(c) to the above-noted, prior-filed PCT application.

Frances Hicks

Frances M. Hicks
Lead Petitions Examiner
Office of Petitions

**ATTACHMENT**: Corrected Filing Receipt

UNITED STATES PATENT AND TRADEMARK OFFICE

Commissioner for Patents
United States Patent and Trademark Office
P.O. Box 1450
Alexandria, VA 22313-1450
www.uspto.gov

BROWN RAYSMAN MILLSTEIN FELDER & STEINER, LLP
1880 CENTURY PARK EAST
12TH FLOOR
LOS ANGELES, CA 90067

COPY MAILED
AUG 1 0 2006
OFFICE OF PETITIONS

| | | |
|---|---|---|
| In re Application of DiMichele et al. | : | |
| Application No. 10/956,398 | : | Decision on Petition |
| Filing Date: September 30, 2004 | : | |
| Attorney Docket No. 10407-931 | : | |

This is a decision on the petition under 37 CFR 1.137(b), filed April 19, 2006, to revive the instant non-provisional application for failure to timely notify the U.S. Patent and Trademark (USPTO) of the filing of an application in a foreign country, or under a multinational treaty that requires publication of applications eighteen months after filing. *See* 37 CFR 1.137(f).

The petition is **DISMISSED**.

A review of the file record shows that a Request to Rescind was filed on April 19, 2006. However, petitioner has not provided the exact filing date of the foreign application. Petitioner should provide the date the foreign application was filed.

Any request for reconsideration should explicitly state the instant non-provisional application is the subject of an application filed in a foreign country and the U. S. Patent and Trademark Office was unintentionally not notified of this filing within 45 days subsequent to the filing of the subject application in a foreign country.

Any request for reconsideration must be submitted within TWO (2) MONTHS from the mail date of this decision. No further petition fee is required for the request. Extensions of time under 37 CFR 1.136(a) are permitted. The reconsideration request should include a cover letter entitled "Renewed Petition under 37 CFR 1.137(f)."

Further correspondence with respect to this matter should be addressed as follows:

By mail: Mail Stop Petition
Commissioner for Patents
P.O. Box 1450
Alexandria, VA 22313-1450

By facsimile: (571) 273-8300
Attn: Office of Petitions

Telephone inquiries regarding this communication should be directed to Petitions Attorney Steven Brantley at (571) 272-3203.

Charles Steven Brantley
Senior Petitions Attorney
Office of Petitions

UNITED STATES PATENT AND TRADEMARK OFFICE

Commissioner for Patents
United States Patent and Trademark Office
P.O. Box 1450
Alexandria, VA 22313-1450
www.uspto.gov

STEPTOE & JOHNSON, LLP
1330 CONNECTICUT AVENUE, NW
WASHINGTON, DC 20036

**COPY MAILED**

APR 0 5 2007

**OFFICE OF PETITIONS**

In re Application of DiMichele et al. :
Application No. 10/956,398 :
Filing Date: September 30, 2004 :
Attorney Docket No. 83336.0931 :

Decision on Petition

This is a decision on the petition under 37 CFR 1.137(b), filed August 15, 2006, to revive the instant non-provisional application for failure to timely notify the U.S. Patent and Trademark (USPTO) of the filing of an application in a foreign country, or under a multinational treaty that requires publication of applications eighteen months after filing. *See* 37 CFR 1.137(f).

The petition is **grant**.

Petitioner states that the instant nonprovisional application is the subject of an application filed in an eighteen-month publication country on September 7, 2005. However, the USPTO was unintentionally not notified of this filing within 45 days subsequent to the filing of the subject application in an eighteen-month publication country. As a result, this application became abandoned pursuant to 35 U.S.C. § 122(b)(2)(B)(iii) and 37 CFR 1.213(c) for failure to timely notify the Office of the filing of an application in a foreign country or under a multilateral international agreement that requires publication of applications 18 months after filing.

A petition to revive an application abandoned pursuant to 35 U.S.C. 122(b)(2)(B)(iii) for failure to notify the USPTO of a foreign filing must be accompanied by:

(1) the required reply which is met by the notification of such filing in a foreign country or under a multinational treaty;
(2) the petition fee as set forth in 37 CFR 1.17(m); and
(3) a statement that the entire delay in filing the required reply from the due date of the reply until the filing of a grantable petition was unintentional.

The instant petition has been found to be in compliance with the above statute and 37 CFR 1.137(b). Accordingly, the failure to timely notify the USPTO of a foreign or international filing within 45 days after the date of filing of such foreign or international application as provided by 35 U.S.C. § 122(b)(2)(B)(iii) and 37 CFR 1.213(c) is accepted as having been unintentionally delayed.

The previous Request and Certification under 35 U.S.C. § 122(b)(2)(B)(i) has been rescinded. A Notice Regarding Rescission of Nonpublication Request which sets forth the projected publication date of July 12, 2007, accompanies this decision on petition.

Technology Center Art Unit 2155 will be informed of the instant decision so that the application can be docketed to an examiner and examined in due course.

Telephone inquiries regarding this communication should be directed to Petitions Attorney Steven Brantley at (571) 272-3203.

Charles Steven Brantley
Senior Petitions Attorney
Office of Petitions

Attachment: Notice Regarding Rescission of Nonpublication Request

UNITED STATES PATENT AND TRADEMARK OFFICE

UNITED STATES DEPARTMENT OF COMMERCE
United States Patent and Trademark Office
Address: COMMISSIONER FOR PATENTS
P.O. Box 1450
Alexandria, Virginia 22313-1450
www.uspto.gov

| APPLICATION NUMBER | FILING/RECEIPT DATE | FIRST NAMED APPLICANT | ATTY. DOCKET NO. |
|---|---|---|---|
| 10/956,398 | 09/30/2004 | Carmen DiMichele | 83336.0931 |

**CONFIRMATION NO. 7618**

66880
STEPTOE & JOHNSON, LLP
1330 CONNECTICUT AVENUE, NW
WASHINGTON, DC 20036

Date Mailed: 03/30/2007

## Communication Regarding Rescission Of Nonpublication Request and/or Notice of Foreign Filing

Applicant's rescission of the previously-filed nonpublication request and/or notice of foreign filing is acknowledged. The paper has been reflected in the Patent and Trademark Office's (USPTO's) computer records so that the earliest possible projected publication date can be assigned.

The projected publication date is 07/12/2007.

If applicant rescinded the nonpublication request before or on the date of "foreign filing,"[1] then no notice of foreign filing is required.

If applicant foreign filed the application after filing the above application and before filing the rescission, and the rescission did not also include a notice of foreign filing, then a notice of foreign filing (not merely a rescission) is required to be filed within 45 days of the date of foreign filing. See 35 U.S.C. § 122(b)(2)(B)(iii), and Clarification of the United States Patent and Trademark Office's Interpretation of the Provisions of 35 U.S.C. § 122(b)(2)(B)(ii)-(iv), 1272 Off. Gaz. Pat. Office 22 (July 1, 2003).

If a notice of foreign filing is required and is not filed within 45 days of the date of foreign filing, then the application becomes abandoned pursuant to 35 U.S.C. § 122(b)(2)(B)(iii). In this situation, applicant should either file a petition to revive or notify the Office that the application is abandoned. See 37 CFR 1.137(f). Any such petition to revive will be forwarded to the Office of Petitions for a decision. Note that the filing of the petition will not operate to stay any period of reply that may be running against the application.

Questions regarding petitions to revive should be directed to the Office of Petitions at (571) 272-3282. Questions regarding publications of patent applications should be directed to the patent application publication hotline at (703) 605-4283 or by e-mail pgpub@uspto.gov.

[1] Note, for purpose of this notice, that "foreign filing" means "filing an application directed to the same invention in another country, or under a multilateral international agreement, that requires publication of applications 18 months after filing".

UNITED STATES PATENT AND TRADEMARK OFFICE

Commissioner for Patents
United States Patent and Trademark Office
P.O. Box 1450
Alexandria, VA 22313-1450
www.uspto.gov

ROCKWELL AUTOMATION, INC./(SLWK)
ATTENTION: SUSAN M. DONAHUE, E-7F19
1201 SOUTH SECOND STREET
MILWAUKEE WI 53204

**COPY MAILED**

DEC 17 2008

In re Application of :
Walacavage, et al. :
Application No. 10/956,410 :
Filed: September 30, 2004 :
Attorney Docket No. 1825.005US1 :
For: REUSE OF MANUFACTURING PROCESS DESIGN MODELS AS PART OF A DIAGNOSTIC SYSTEM

ON PETITION

This is a decision on the petition, filed November 24, 2008, under 37 CFR 1.137(b) to revive the above-identified application.

The petition is **GRANTED**.

The above-identified application became abandoned for failure to timely submit a reply within three (3) months of the mailing of the April 21, 2008 non-final Office action. No response being received and no extensions of time being obtained under the provisions of 37 CFR 1.136(a), this application became abandoned on July 22, 2008. A Notice of Abandonment was mailed on October 31, 2008.

Applicants have submitted an amendment in reply to the April 21, 2008 non-final Office action, an acceptable statement of the unintentional nature of the delay in responding to the April 21, 2008 non-final Office action, and the petition fee.

The statement of unintentional delay presented in the petition does not comply with the current rule. 37 CFR 1.137(b)(3) requires a statement that "the entire delay in filing the required reply from the due date for the reply until the filing of a grantable petition pursuant to 37 CFR 1.137(b) was unintentional" be submitted. However, the statement presented will be accepted and construed as meaning that "the entire delay in filing the required reply from the due date for the reply until the filing of a grantable petition pursuant to 37 CFR 1.137(b) was unintentional." If this is an incorrect interpretation in view of the rules, practitioner is required to provide a statement to that effect.

All of the requirements under 37 CFR 1.137(b) being met, the petition is granted.

The application file does not indicate a change of address has been filed in this case, although the address given on the petition differs from the address of record. A change of address should be filed in this case in accordance with MPEP 601.03. A courtesy copy of this decision is being mailed to the address noted on the petition. However, until otherwise instructed, all future correspondence regarding this application will be mailed solely to the address of record.

After the mailing of this decision, the application will be returned to Technology Center AU 2121 for consideration of the amendment filed on November 24, 2008.

Telephone inquiries should be directed to the undersigned at (571) 272-3230.

Shirene Willis Brantley

Shirene Willis Brantley
Senior Petitions Attorney
Office of Petitions

CC: DAVID R. COCHRAN
SCHWEGMAN, LUNDBERG& WOESSNER, P.A.
P.O. BOX 2938
MINNEAPOLIS MN 55402

UNITED STATES PATENT AND TRADEMARK OFFICE

Commissioner for Patents
United States Patent and Trademark Office
P.O. Box 1450
Alexandria, VA 22313-1450
www.uspto.gov

MAILED

MAY 17 2010

OFFICE OF PETITIONS

**KYOCERA INTERNATIONAL INC.**
**INTELLECTUAL PROPERY DEPARTMENT**
**P.O. BOX 928289**
**SAN DIEGO CA 92192**

| | | |
|---|---|---|
| In re Application of | : | |
| Patel et al. | : | |
| Application No. 10/956,411 | : | DECISION ON PETITION |
| Filed: September 30, 2004 | : | |
| Attorney Docket No. UTL 00397 | : | |

This is a decision on the petition under the unintentional provisions of 37 CFR 1.137(b), filed March 22, 2010, to revive the above-identified application.

The petition is **GRANTED**.

This application became abandoned for failure to timely pay the issue and publication fees on or before February 16, 2010, as required by the Notice of Allowance and Fee(s) Due mailed November 16, 2009. Accordingly, the date of abandonment of this application is February 17, 2010. A Notice of Abandonment was mailed March 10, 2010.

The petition satisfies the requirements of 37 CFR 1.137(b) in that petitioner has supplied (1) the reply in the form of payment of the issue fee of $1,510.00 and publication fee of $300.00 (previously paid February 17, 2010); (2) the petition fee of $1,620.00; and (3) a proper statement of unintentional delay.

It is not apparent whether the statement of unintentional delay was signed by a person who would have been in a position of knowing that the **entire** delay in filing the required reply from the due date for the reply until the filing of a grantable petition pursuant to 37 CFR 1.137(b) was unintentional. Nevertheless, in accordance with 37 CFR 10.18, the statement is accepted as constituting a certification of unintentional delay. However, in the event that petitioner has no knowledge that the delay was unintentional, petitioner must make such an inquiry to ascertain that, in fact, the delay was unintentional. If petitioner discovers that the delay was intentional, petitioner must notify the Office. It is not apparent whether the person signing the instant petition was ever given a power of attorney or authorization of agent to prosecute this patent. In accordance with 37 CFR 1.34(a), the signature appearing on the petition shall constitute a representation to the

United States Patent and Trademark Office that he/she is authorized to represent the particular party in whose behalf he/she acts.

Further, the address given on the petition differs from the address of record. A courtesy copy of this decision is being mailed to the address given on the petition; however, the Office will mail all future correspondence solely to the address of record.

Telephone inquiries concerning this decision should be directed to the undersigned at (571) 272-7751.

This application is being referred to the Office of Data Management for processing into a patent.

Joan Olszewski

Joan Olszewski
Petitions Examiner
Office of Petitions

cc: George W. Luckhardt
10300 Campus Point Drive
San Diego, CA 92121

UNITED STATES PATENT AND TRADEMARK OFFICE

Commissioner for Patents
United States Patent and Trademark Office
P.O. Box 1450
Alexandria, VA 22313-1450
www.uspto.gov

**FOLEY & LARDNER LLP**
**P.O. BOX 80278**
**SAN DIEGO CA 92138-0278**

COPY MAILED
AUG 18 2008

| | | |
|---|---|---|
| In re Application of | : | |
| **VAHA-SIPILA**, et al | : | |
| Application No. 10/956,421 | : | DECISION ON PETITION |
| Filed: October 1, 2004 | : | TO WITHDRAW |
| Attorney Docket No. 037145-8101 | : | FROM RECORD |
| | : | |

This is a decision on the Request to Withdraw as attorney or agent of record under 37 C.F.R. § 1.36(b), filed July 11, 2008.

The request is **NOT APPROVED**.

A grantable request to withdraw as attorney/agent of record must be signed by every attorney/agent seeking to withdraw or contain a clear indication that one attorney is signing on behalf of another/others. The Office requires the practitioner(s) requesting withdrawal to certify that he, she, or they have: (1) given reasonable notice to the client, prior to the expiration of the response period, that the practitioner(s) intends to withdraw from employment; (2) delivered to the client or a duly authorized representative of the client all papers and property (including funds) to which the client is entitled; and (3) notified the client of any responses that may be due and the time frame within which the client must respond, pursuant 37 CFR 10.40(c).

The request cannot be approved because there is no indication that the acts noted in the above-identified certifications have been performed.

All future communications from the Office will continue to be directed to the above-listed address until otherwise notified by applicant.

Telephone inquiries concerning this decision should be directed to the undersigned at 571-272-6735.

Diane Goodwyn
Petitions Examiner
Office of Petitions

cc: MR. BRADLEY C. WRIGHT
BANNER & WITCOFF LLP
1100 13TH STREET, NW, SUITE 1200
WASHINGTON, DC 20005

UNITED STATES PATENT AND TRADEMARK OFFICE

Commissioner for Patents
United States Patent and Trademark Office
P.O. Box 1450
Alexandria, VA 22313-1450
www.uspto.gov

BRADLEY ARANT BOULT CUMMINGS LLP
INTELLECTUAL PROPERTY DEPARTMENT
1819 FIFTH AVENUE NORTH
BIRMINGHAM AL 35203-2104

COPY MAILED

DEC 18 2009

OFFICE OF PETITIONS

In re Patent No. 7,596,923 :
Thomas et al. :
Issue Date: October 6, 2009 :
Application No. 10/956,422 : DECISION ON REQUEST FOR
Filed: October 1, 2004 : RECONSIDERATION OF
Attorney Dkt. No. P740041US00GP : PATENT TERM ADJUSTMENT
Title: METHOD OF CONSTRUCTING :
BUILDING FOUNDATION HAVING WALL :
STRUCTURAL ELEMENT EMBEDDED IN :
SECOND FOUNDATION ELEMENT :
LOCATED ON TOP OF FIRST :
FOUNDATION ELEMENT :

This is a decision on the "REQUEST FOR RECONSIDERATION OF PATENT TERM ADJUSTMENT UNDER 37 C.F.R. § 1.705," filed October 6, 2009, requesting that the patent term adjustment determination for the above-identified patent be changed from zero (0) days to one five hundred forty-eight (548) days. This request is properly treated under 37 CFR 1.705(d).

The request for reconsideration of patent term adjustment is **DISMISSED**.

On October 6, 2009, the above-identified application matured into US Patent No. 7,596,923 with a patent term adjustment of 0 days. This request for reconsideration of patent term adjustment was timely filed within two months of the issue date of the patent. See 37 C.F.R. § 1.705(d).

The Office acknowledges submission of the $200.00 fee set forth in 37 C.F.R. § 1.18(e).

Patentees reference Wyeth v. Dudas, 580 F. Supp. 2d 138, 88 U.S.P.Q. 2d 1538 (D.D.C. 2008) and assert that the patent is

entitled to an additional adjustment of 563 days pursuant to 37 CFR 1.702(b). Thus, patentees request that the determination of patent term adjustment be increased to a total of five hundred forty-eight (548) days (the sum of the period of three-year delay (563 days) and the period of examination delay (278 days) minus applicants' delay (293 days). Patentees do not dispute the 298-day reduction for applicants' delay.

The Office finds that as of November 1, 2007, the day before the request for continued examination (RCE) was filed on November 2, 2007, the application was pending three years and 31 days after its filing date (October 2, 2007 to November 1, 2007).[1] At the time of filing of the RCE on November 2, 2007, a period of adjustment of 278 days was entered for Office delay pursuant to 37 CFR 1.702(a)(1). At issue is whether patentee should accrue an additional 31 days of patent term adjustment for the Office taking in excess of three years to issue the patent as well as 278 days for Office failure to take a certain action within a specified time frame (or examination delay).

The Office contends that the entire 31-day period of delay in issuance of the patent overlaps with the period of 278 days of examination delay. Patentees' calculation of the period of overlap is inconsistent with the Office's interpretation of this provision. 35 U.S.C. 154(b)(2)(A) limits the adjustment of patent term, as follows:

> To the extent that the periods of delay attributable to grounds specified in paragraph (1) overlap, the period of any adjustment granted under this subsection shall not exceed the actual number of days the issuance of the patent was delayed.

Likewise, 37 CFR 1.703(f) provides that:

> To the extent that periods of delay attributable to the grounds specified in §1.702 overlap, the period of adjustment granted under this section shall not exceed the actual number of days the issuance of the patent was delayed.

---

[1] It is noted that patentees calculations use the date of the filing of the second RCE (filed April 16, 2009) instead of the filing date of the first RCE filed on November 2, 2007.

As explained in *Explanation of 37 CFR 1.703(f) and of the United States Patent and Trademark Office Interpretation of 35 U.S.C. 154(b)(2)(A)*, 69 Fed. Reg. 34283 (June 21, 2004), the Office interprets 35 U.S.C. 154(b)(2)(A) as permitting either patent term adjustment under 35 U.S.C. 154(b)(1)(A)(i)-(iv), or patent term adjustment under 35 U.S.C. 154(b)(1)(B), but not as permitting patent term adjustment under both 35 U.S.C. 154(b)(1)(A)(i)-(iv) and 154(b)(1)(B). Accordingly, the Office implements the overlap provision as follows:

> If an application is entitled to an adjustment under 35 U.S.C. 154(b)(1)(B), the entire period during which the application was pending (except for periods excluded under 35 U.S.C. 154(b)(1)(B)(i)-(iii)), and not just the period beginning three years after the actual filing date of the application, is the period of delay under 35 U.S.C. 154(b)(1)(B) in determining whether periods of delay overlap under 35 U.S.C. 154(b)(2)(A). Thus, any days of delay for Office issuance of the patent more than 3 years after the filing date of the application, which overlap with the days of patent term adjustment accorded prior to the issuance of the patent will not result in any additional patent term adjustment. See 35 U.S.C. 154(b)(1)(B), 35 U.S.C. 154(b)(2)(A), and 37 CFR § 1.703(f). See *Changes to Implement Patent Term Adjustment Under Twenty Year Term; Final Rule*, 65 Fed. Reg. 56366 (Sept. 18, 2000). See also *Revision of Patent Term Extension and Patent Term Adjustment Provisions; Final Rule*, 69 Fed. Reg. 21704 (April 22, 2004), 1282 Off. Gaz. Pat. Office 100 (May 18, 2004). See also *Explanation of 37 CFR 1.703(f) and of the United States Patent and Trademark Office Interpretation of 35 U.S.C. 154(b)(2)(A)*, 69 Fed. Reg. 34283 (June 21, 2004).

As such, the period for over 3 year pendency does not overlap only to the extent that the actual dates in the period beginning three years after the date on which the application was filed overlap with the actual dates in the periods for failure of the Office to take action within specified time frames.

In this instance, the relevant period under 35 U.S.C. 154(b)(1)(B) in determining whether periods of delay "overlap" under 35 U.S.C. 154(b)(2)(A) is the entire period during which the application was pending before the Office, October 1, 2004 until November 1, 2007, the day before the filing of the RCE on

November 2, 2007. 278 days of patent term adjustment were accorded prior to the filing of the RCE for the Office failing to respond within specified time frames during the pendency of the application. All of the 31 days for Office delay in issuing the patent overlap with the 278 days of Office delay accrued prior to submission of the RCE. Entry of both 31 days pursuant to 37 CFR §1.702(b) for the Office taking in excess of three years to issue the patent and 278 days pursuant to 37 CFR §1.702(a)(1) for Office examination delay is neither permitted nor warranted. The Office did not delay 278 days and then delay another 31 days. As of the filing of the RCE on November 2, 2007, the greater period, 278 days, is the actual number of days issuance of the patent was delayed by the Office.

Accordingly, at issuance, the Office properly entered no additional days of patent term adjustment for the Office taking in excess of 3 years to issue the patent, having considered the 278 days of examination delay under 37 CFR 1.702(a)(1).

In view thereof, no adjustment to the patent term will be made.

Telephone inquiries specific to this matter should be directed to Charlema Grant, Petitions Attorney, at (571) 272-3215.

*/ALESIA M. BROWN/*

Alesia M. Brown
Petitions Attorney
Office of Petitions

UNITED STATES PATENT AND TRADEMARK OFFICE

Commissioner for Patents
United States Patent and Trademark Office
P.O. Box 1450
Alexandria, VA 22313-1450
www.uspto.gov

COPY MAILED

DEC 19 2006

OFFICE OF PETITIONS

**TOWNSEND AND TOWNSEND AND CREW, LLP**
**TWO EMBARCADERO CENTER, EIGHTH FLOOR**
**SAN FRANCISCO CA 94111-3834**

| | | |
|---|---|---|
| In re Application of | : | |
| **WHEELER**, et al. | : | |
| Application No. 10/956,425 | : | DECISION ON PETITION |
| Filed: October 1, 2004 | : | TO WITHDRAW |
| Attorney Docket No. 016303-002530US | : | FROM RECORD . |

This is a decision on the Request to Withdraw as attorney or agent of record under 37 C.F.R. § 1.36(b), filed September 22, 2006 and re-submitted September 25, 2006.

The request is **APPROVED**.

A grantable request to withdraw as attorney/agent of record must be signed by every attorney/agent seeking to withdraw or contain a clear indication that one attorney is signing on behalf of another/others. A request to withdraw will not be approved unless at least 30 (thirty) days would remain between the date of approval and the later of the expiration date of a time to file a response or the expiration date of the maximum time period which can be extended under 37 C.F.R. § 1.136(a).

The request was signed by Eugenia Garrett-Wackowski on behalf of all attorneys of record. All attorneys/agents associated have been withdrawn. Applicant is reminded that there is no attorney of record at this time.

The request to change the correspondence of record is not acceptable as the requested correspondence address is not that of: (1) the first named signing inventor; or (2) an intervening assignee of the entire interest under 37 C.F.R 3.71. All future communications from the Office will be directed to the first named signing inventor at the first copied address below until otherwise properly notified by the applicant.

Telephone inquiries concerning this decision should be directed to the undersigned at 571-272-7253.

Monica A. Graves
Petitions Examiner
Office of Petitions

cc: **JEFFREY J. WHEELER**
**6700 COLTSFOOT DRIVE**
**RICHMOND, BRITISH COLUMBIA V7C2J4**
**CANADA**

cc: **KARL R. HERMANNS**
**SEED IP LAW GROUP PLLC**
**701 FIFTH AVENUE, SUITE 6300**
**SEATTLE, WA 98040**

UNITED STATES PATENT AND TRADEMARK OFFICE

UNITED STATES DEPARTMENT OF COMMERCE
United States Patent and Trademark Office
Address: COMMISSIONER FOR PATENTS
P.O. Box 1450
Alexandria, Virginia 22313-1450
www.uspto.gov

K&L Gates LLP
P.O. Box 1135
CHICAGO, IL 60690

Mail Date: 04/20/2010

| | | |
|---|---|---|
| **Applicant** | : Paulina Rodgers | : DECISION ON REQUEST FOR |
| **Patent Number** | : 7575515 | : RECALCULATION of PATENT |
| **Issue Date** | : 08/18/2009 | : TERM ADJUSTMENT IN VIEW |
| **Appliction No** | : 10/956,444 | : OF WYETH |
| **Filed** | : 09/30/2004 | : |
| | | : |

The Patentee's Request for Recalculation is **DISMISSED.**

This Request is deemed ineligible for consideration for one or more of the following reasons:

(A). The patent for which PTA recalculation is requested is either a design or reissue application or is a reexamination proceeding;

(B). The patent for which PTA recalculation is requested resulted from a utility or plant application filed under 35 USC 111(a) before May 29, 2000 and no CPA filed in the application on/after May 29, 2000;

(C). The patent for which PTA recalculation is requested resulted from an international application in which the international filing date was before May 29, 2000 and no CPA filed in the application on/after May 29, 2000;

(D). The patent for which PTA recalculation is requested issued on/after March 2, 2010;

(E). The Request for Recalculation was filed more than 180 days after the grant date of the patent and the request was not filed within two months of a dismissal of a request for reconsideration of the of the patent term under 37 CFR 1.705(d);

(F). The Request for Recalculation is not solely limited to USPTO pre-Wyeth interpretation of 35 U.S.C. 154(b)(2)(A);

or

(G). A civil action was filed pursuant to 35 U.S.C. 154(b)(4)(A)concerning the same patent at issue in this request.

Patentee may file a reply to this decision dismissing the Request for Recalculation. Patentee must file such reply within one month or thirty days, whichever is longer, of the mail date of the decision dismissing the Request for Recalculation. No fee is required if patentee is asserting in the reply that the dismissal for ineligibility is improper.

Patentee should use document code PET.OP if electronically filing a reply to this dismissal. If the USPTO finds that the request was improperly deemed ineligible, the USPTO will mail applicant a recalculation determination.

Patentee should be aware that in order to preserve the right to review in the United States District Court for the District of Columbia of the USPTO patent term adjustment determination, patentee must ensure that he or she also take the steps required under 35 U.S.C. 154(b)(4)(A). Nothing in the request for recalculation should be construed as providing an alternative time frame for commencing a civil action under 35 U.S.C. 154 (b)(4)(A).

Any questions concerning this decision should be directed to the Office of Patent Legal Administration at 571-272-7702.

## SPE RESPONSE FOR CERTIFICATE OF CORRECTION

**Paper No**.:20080303

**DATE** : February 21, 2008

**TO SPE OF** : ART UNIT 2628

**SUBJECT** : Request for Certificate of Correction on Patent No.: 7148902 B2

A response is requested with respect to the accompanying request for a certificate of correction.

Please complete this form and return with file, within **7** days to:
**Certificates of Correction Branch - ST (South Tower) 9A22**
Palm location **7590** - Tel. No. (703) 305-8309

With respect to the change(s) requested, correcting Office and/or Applicant's errors, should the patent read as shown in the certificate of correction? No new matter should be introduced, nor should the scope or meaning of the claims be changed.

**Thank You For Your Assistance** **Certificates of Correction Branch**

**The request for issuing the above-identified correction(s) is hereby:**

Note your decision on the appropriated box.

☒ **Approved** All changes apply.

☐ **Approved in Part** Specify below which changes **do not** apply.

☐ **Denied** State the reasons for denial below.

**Comments:**

**SPE:** /Mark Zimmerman/ Art Unit 2628

UNITED STATES PATENT AND TRADEMARK OFFICE

APR - 2 2007

Commissioner for Patents
United States Patent and Trademark Office
P.O. Box 1450
Alexandria, VA 22313-1450
www.uspto.gov

SALIWANCHIK LLOYD & SALIWANCHIK
A PROFESSIONAL ASSOCIATION
PO BOX 142950
GAINESVILLE FL 32614-2950

| | |
|---|---|
| In re Application of | : |
| H. Ernest Schnepf et al | : |
| Serial No.: 10/956,448 | : PETITION DECISION |
| Filed: October 1, 2004 | : |
| Attorney Docket No.: DAS-107X | : |

This is a decision on the PETITION FOR ACCEPTANCE OF COLOR DRAWINGS UNDER 37 CFR 1.84(a)(2). The petition was filed October 1, 2004. Entry of color drawings requires: 1) three sets of the color drawings, 2) a proper amendment to the specification indicating color photographs or drawings are present in the file, and 3) the required fee under 37 CFR 1.17(h).

A review of the application record indicates that the petition lacks the required amendment to the specification. Applicants should submit a renewed petition accompanied by the required amendment as a separate paper. No additional petition fee will be required.

The petition is **DISMISSED**.

Should there be any questions with respect to this decision, please contact William R. Dixon, Jr., by mail addressed to: Director, Technology Center 1600, at the address listed above, or by telephone at 571-272-0519 or by facsimile transmission at 571-273-8300.

William R. Dixon, Jr.
Special Program Examiner
Technology Center 1600

UNITED STATES PATENT AND TRADEMARK OFFICE

MAY 16 2007

Commissioner for Patents
United States Patent and Trademark Office
P.O. Box 1450
Alexandria, VA 22313-1450
www.uspto.gov

SALIWANCHIK LLOYD & SALIWANCHIK
A PROFESSIONAL ASSOCIATION
PO BOX 142950
GAINESVILLE FL 32614-2950

| | |
|---|---|
| In re Application of | : |
| H. Ernest Schnepf et al | : |
| Serial No.: 10/956,448 | : PETITION DECISION |
| Filed: October 1, 2004 | : |
| Attorney Docket No.: DAS-107X | : |

This is a decision on the renewed PETITION FOR ACCEPTANCE OF COLOR DRAWINGS UNDER 37 CFR 1.84(a)(2). The petition was filed May 2, 2007. Entry of color drawings requires: 1) three sets of the color drawings, 2) a proper amendment to the specification indicating color photographs or drawings are present in the file, and 3) the required fee under 37 CFR 1.17(h).

A review of the application record indicates that the petition meets all of the requirements for acceptance of color drawings. This is not to be construed that all of the drawings are accepted, only that the color drawings are acceptable.

The petition is **GRANTED**.

Should there be any questions with respect to this decision, please contact William R. Dixon, Jr., by mail addressed to: Director, Technology Center 1600, at the address listed above, or by telephone at 571-272-0519 or by facsimile transmission at 571-273-8300.

William R. Dixon, Jr.
Special Program Examiner
Technology Center 1600

UNITED STATES PATENT AND TRADEMARK OFFICE

Commissioner for Patents
United States Patent and Trademark Office
P. O. Box 1450
Alexandria, VA 22313-1450
www. uspto. gov

TOWNSEND AND TOWNSEND AND CREW, LLP
TWO EMBARCADERO CENTER, 8TH FLOOR
SAN FRANCISCO, CA 94111

COPY MAILED

AUG 24 2005

OFFICE OF PETITIONS

| | | |
|---|---|---|
| In re Application of | : | |
| Loren R. Pickart | : | |
| Application No. 10/956,450 | : | ON PETITION |
| Filed: October 1, 2004 | : | |
| Attorney Docket No. 15672-001110US | : | |

This is a decision on the petition, filed June 30, 2005 which is being treated as a petition under 37 CFR 1.181, to withdraw the holding of abandonment of the above-identified application.

The petition under 37 CFR 1.181 is **GRANTED**.

The above-identified application was held abandoned for failure to reply in a timely manner to the Notice to File Missing Parts of Nonprovisional Application (Notice) mailed November 16, 2004. The Notice set a period for reply of two (2) months from the mail date of the Notice. The Notice mailed November 16, 2004 was returned to the USPTO as undelivered on November 30, 2004.

Telephone inquiries concerning this decision should be directed to Irvin Dingle at (571) 272-3210.

The matter is being referred to Technology Center AU 1616 for further processing.

Irvin Dingle
Petitions Examiner
Office of Petitions
Office of the Deputy Commissioner
for Patent Examination Policy

UNITED STATES PATENT AND TRADEMARK OFFICE

Commissioner for Patents
United States Patent and Trademark Office
P.O. Box 1450
Alexandria, VA 22313-1450
www.uspto.gov

RANDALL BROWN
6275 GRANGERS DAIRY DRIVE
SACRAMENTO, CA 95831

COPY MAILED

FEB 12 2007

OFFICE OF PETITIONS

| | | |
|---|---|---|
| In re Application of | : | |
| Randall Brown | : | |
| Application No. 10/956,454 | : | DECISION ON PETITION |
| Filed: October 1, 2004 | : | |
| Attorney Docket No. RB-001 | : | |

This is a decision on the petition filed September 22, 2006 in the above-identified application.

The petition is **DISMISSED.**

The rules and statutory provisions governing the operations of the U.S. Patent and Trademark Office require payment of a fee on filing each petition to revive an abandoned application for patent based on unintentional delay or to accept an unintentionally delayed payment of a fee for issuing a patent. In this instance, the fee required by law is $1,500. If applicant can qualify as a "small entity" and does so prior to or together with the payment of the fee, the fee will be one-half of the amount indicated. See 37 CFR 1.27.

The petition in the above-identified application was not accompanied by payment of the required fee. No consideration on the merits can be given that petition until the required fee is received.

Further correspondence with respect to this matter should be addressed as follows:

By mail: Mail Stop PETITIONS
Commissioner for Patents
Post Office Box 1450
Alexandria, VA 22313-1450

By hand: Customer Service Window
Mail Stop Petitions
Randolph Building
401 Dulany Street
Alexandria, VA 22314

By fax: (571) 273-8300
ATTN: Office of Petitions

Any questions concerning this matter may be directed to the undersigned at (571) 272-3210.

Irvin Dingle
Petitions Examiner
Office of Petitions

UNITED STATES PATENT AND TRADEMARK OFFICE

Commissioner for Patents
United States Patent and Trademark Office
P.O. Box 1450
Alexandria, VA 22313-1450
www.uspto.gov

RANDALL BROWN
6275 GRANGERS DAIRY DRIVE
SACRAMENTO, CA 95831

**COPY MAILED**

JUL 30 2007

**OFFICE OF PETITIONS**

| | | |
|---|---|---|
| In re Application of | : | |
| Randall Brown | : | |
| Application No. 10/956,454 | : | ON PETITION |
| Filed: October 1, 2004 | : | |
| Attorney Docket No. RB-0012 | : | |

This is a decision on the renewed petition under 37 CFR 1.137(b), filed February 28, 2007, to revive the above-identified application.

The petition is **GRANTED**.

The above-identified application became abandoned for failure to reply in a timely manner to the non-final Office action mailed October 3, 2005, which set a shortened statutory period for reply of three (3) months. No extension of time under the provisions of 37 CFR 1.136(a) were obtained. Accordingly, the above-identified application became abandoned on January 4, 2006.

Telephone inquiries concerning this decision should be directed to Irvin Dingle at (571) 272-3210.

This matter is being referred to Technology Center AU 3743 for further processing.

Irvin Dingle
Petitions Examiner
Office of Petitions

UNITED STATES PATENT AND TRADEMARK OFFICE

Commissioner for Patents
United States Patent and Trademark Office
P.O. Box 1450
Alexandria, VA 22313-1450
www.uspto.gov

**Nixon Peabody LLP**
**P.O. Box 60610**
**Palo Alto CA 94306**

COPY MAILED
JAN 25 2010

| | | |
|---|---|---|
| In re Patent No. 7,570,567 | : | |
| Issued: August 4, 2009 | : | |
| Application No. 10/956,467 | : | ON PETITION |
| Filed: September 30, 2004 | : | |
| Attorney Docket No. 434620-124 | : | |

This is a decision on the petition filed December 1, 2009, which is being treated as a request under 37 CFR 3.81(b)[1] to correct the name of the assignee on the front page of the above-identified patent by way of a Certificate of Correction.

The request is **GRANTED**.

A Certificate of Correction was issued on January 5, 2010.

Further, since the error for correction appears to be the result of a printing error on the part of the USPTO, the unnecessary $130.00 processing fee will be refunded to petitioner's deposit account in due course.

Telephone inquiries concerning this decision may be directed to the undersigned at (571) 272-7751. Inquiries regarding the certificate of correction should be directed to the Certificate of Correction Branch at (571) 272-4200.

Joan Olszewski
Petitions Examiner
Office of Petitions

[1] *See* MPEP 1309, subsection II; and Official Gazette of June 22, 2004.

UNITED STATES PATENT AND TRADEMARK OFFICE

Commissioner for Patents
United States Patent and Trademark Office
P.O. Box 1450
Alexandria, VA 22313-1450
www.uspto.gov

MACMILLAN, SOBANSKI & TODD, LLC
ONE MARITIME PLAZA-FOURTH FLOOR
720 WATER STREET
TOLEDO OH 43604

COPY MAILED

MAR 2 9 2005

OFFICE OF PETITIONS

| | |
|---|---|
| In re Application of | : |
| Radu and Dry | : |
| Application No. 10/956,475 | : DECISION ACCORDING STATUS |
| Filed: October 1, 2004 | : UNDER 37 CFR 1.47(a) |
| Attorney Docket No. 1-74983 | : |
| For: CONSOLE AND OBJECT HOLDER ASSEMBLY FOR A VEHICLE | : |

This is in response to the petition under 37 CFR 1.47(a), filed February 24, 2005 (certificate of mailing date February 21, 2005).

The petition is granted.

Petitioner has shown that the non-signing inventor, Bogdan Radu, has constructively refused to join in the filing of the above-identified application after having been presented with the application papers. Specifically, the petition signed by Attorney Scott A. Blake and accompanying exhibits establish that the inventor and the inventor's legal representative were both successfully mailed the application papers, including the specification, claims and drawings, but both failed to respond to requests that Mr. Radu execute and return the declaration or confirm that he will not sign the declaration. Petitioner has submitted a declaration in compliance with 37 CFR 1.63 and 1.64. Regarding the petition fee, the current fee due for filing a petition under 37 CFR 1.47(a) is $200.00. Petitioner's deposit account was charged that amount, instead of $130.00 as petitioner specified, on March 1, 2005.

This application and papers have been reviewed and found in compliance with 37 CFR 1.47(a). This application is hereby accorded Rule 1.47(a) status.

As provided in Rule 1.47(c), this Office will forward notice of this application's filing to the non-signing inventor at the address given in the petition. Notice of the filing of this application will also be published in the Official Gazette.

After this decision is mailed, the above-identified application will be forwarded Technology

Center GAU 3612 for examination in due course.

Telephone inquiries should be directed to the undersigned at (571) 272-3230.

E. Shirene Willis

E. Shirene Willis
Senior Petitions Attorney
Office of Petitions

UNITED STATES PATENT AND TRADEMARK OFFICE

Commissioner for Patents
United States Patent and Trademark Office
P.O. Box 1450
Alexandria, VA 22313-1450
www.uspto.gov

BOGDAN RADU
16011 KNOLLWOOD DRIVE
DEARBORN, MI 48120

COPY MAILED

MAR 2 9 2005

OFFICE OF PETITIONS

In re Application of
Radu and Dry
Application No. 10/956,475
Filed: October 1, 2004
Attorney Docket No. 1-74983
For: CONSOLE AND OBJECT HOLDER ASSEMBLY FOR A VEHICLE

LETTER

Dear Mr. Radu:

You are named as a joint inventor in the above identified United States patent application, filed under the provisions of 35 U.S.C. 116 (United States Code), and 37 CFR 1.47(a), Rules of Practice in Patent Cases. Should a patent be granted on the application you will be designated therein as a joint inventor.

As a named inventor you are entitled to inspect any paper in the file wrapper of the application, order copies of all or any part thereof (at a prepaid cost per 37 CFR 1.19) or make your position of record in the application. Alternatively, you may arrange to do any of the preceding through a registered patent attorney or agent presenting written authorization from you. If you care to join the application, counsel of record (see below) would presumably assist you. Joining in the application would entail the filing of an appropriate oath or declaration by you pursuant to 37 CFR 1.63.

Requests for information regarding your application should be directed to the File Information Unit at (703)308-2733. Information regarding how to pay for and order a copy of the application, or a specific paper in the application, should be directed to Certification Division at (703)308-9726 or 1(800)972-6382 (outside the Washington D.C. area).

Telephone inquiries regarding this communication should be directed to the undersigned at (571) 272-3230.

E. Shirene Willis
Senior Petitions Attorney
Office of Petitions

ATTORNEY OF RECORD: MACMILLAN, SOBANSKI & TODD, LLC
ONE MARITIME PLAZA-FOURTH FLOOR
720 WATER STREET
TOLEDO OH 43604

UNITED STATES PATENT AND TRADEMARK OFFICE

Commissioner for Patents
United States Patent and Trademark Office
P.O. Box 1450
Alexandria, VA 22313-1450
www.uspto.gov

BRINKS HOFER GILSON & LIONE
P.O. BOX 10395
CHICAGO, IL 60610

**COPY MAILED**

SEP 30 2008

**OFFICE OF PETITIONS**

In re Application of :
Charles W. Connors Jr., et. al. :
Application No. 10/956,477 : ON PETITION
Filed: October 1, 2004 :
Attorney Docket No. 1870-345 :

This is a decision on the petition under 37 CFR 1.137(b), filed September 2, 2008, to revive the above-identified application.

The petition satisfies the requirements of 37 CFR 1.137(b) in that petitioner has supplied (1) the reply in the form of an appeal brief with the $510 fee; (2) the petition fee of $1,540; and (3) a proper statement of unintentional delay. Therefore, the petition is **GRANTED.**

The Office acknowledges receipt of $1,640 for a four month extension of time filed on September 2, 2008. However, an extension of time under 37 CFR 1.136 must be filed prior to the expiration of the maximum extendable period for reply. See In re Application of S., 8 USPQ2d 1630, 1631 (Comm'r. Pats. 1988). Since the $1,640 extension of time was subsequent to the maximum extendable period for reply, this fee is unnecessary and will be credited to petitioner's deposit account.

This application file is being referred to Technology Center Art Unit 1793 for further processing.

The file does not indicate a change of address has been submitted, although the address given on the petition differs from the address of record. If appropriate, a change of address should be filed in accordance with MPEP 601.03. A courtesy copy of this decision is being mailed to the address given on the petition; however, the Office will mail all future correspondence solely to the address of record.

Telephone inquiries concerning this decision should be directed to the undersigned at (571) 272-3226.

Andrea Smith
Petitions Examiner
Office of Petitions

cc: Kent E. Genin
455 N. Cityfront Plaza Drive
NBC Tower - Suite 3600
Chicago, IL 60611-5599

UNITED STATES PATENT AND TRADEMARK OFFICE

Commissioner for Patents
United States Patent and Trademark Office
P.O. Box 1450
Alexandria, VA 22313-1450
www.uspto.gov

ROBERT W. STROZIER PLLC
P. O. BOX 429
BELLAIRE, TX 77402-0429

COPY MAILED

SEP 19 2007

OFFICE OF PETITIONS

In re Application of :
Theodore I. Malinin et al :
Application No. 10/956,487 : DECISION ON PETITION
Filed: October 1, 2004 : UNDER 37 CFR 1.313(c):
Attorney Docket No. 03010/01US

This is a decision on the petition under 37 CFR 1.313(c), filed September 5, 2007, to withdraw the above-identified application from issue after payment of the issue fee.

The petition is **DISMISSED**.

37 CFR 1.313(c) provides that:

Once the issue fee has been paid, the application will not be withdrawn from issue upon petition by the applicant for any reason except:

(1) Unpatentability of one of more claims, which petition must be accompanied by an unequivocal statement that one or more claims are unpatentable, an amendment to such claim or claims, and an explanation as to how the amendment causes such claim or claims to be patentable;

(2) Consideration of a request for continued examination in compliance with 37 CFR 1.114; or

(3) Express abandonment of the application. Such express abandonment may be in favor of a continuing application.

Upon payment of the issue fee, an application will not be withdrawn from issue upon petition except for the reasons enumerated in 37 CFR 1.313(c). The circumstances of the above-identified application do not fall within any of those exceptions.

Petitioner may wish to file a renewed petition under 37 CFR 1.313(c)(2), along with a request for continued examination under 37 CFR 1.114 if it is desired to have the examiner

consider an information disclosure statement, amendment or other submission. Petitioner is reminded that a petition to withdraw from issue will not be effective to withdraw the application from issue unless it is actually received and granted by the appropriate officials before the date of issue. *Note* 37 CFR 1.313(d).

Further correspondence with respect to this matter should be addressed as follows:

By Mail: Mail Stop PETITION or 313(c)
Commissioner for Patents
P. O. Box 1450
Alexandria, VA 22313-1450

By hand: U. S. Patent and Trademark Office
Customer Service Window, Mail Stop Petitions
Randolph Building
401 Dulany Street
Alexandria, VA 22314

The facsimile number for the Office of Petitions for petitions to withdraw from issue is **(571) 273-0025.**

Correspondence regarding this decision may also be filed through the electronic filing system of the USPTO.

Telephone inquiries concerning this decision should be directed to the undersigned at (571) 272-3218.

Frances Hicks
Petitions Examiner
Office of Petitions

UNITED STATES PATENT AND TRADEMARK OFFICE

Commissioner for Patents
United States Patent and Trademark Office
P.O. Box 1450
Alexandria, VA 22313-1450
www.uspto.gov

**CHARLES N. QUINN**
**FOX ROTHSCHILD LLP**
**2000 MARKET STREET, 10TH FLOOR**
**PHILADELPHIA PA 19103**

**COPY MAILED**

AUG 0 9 2007

**OFFICE OF PETITIONS**

| | | |
|---|---|---|
| In re Application of | : | |
| Cimino, Deirdre M. | : | |
| Application No. 10/956,492 | : | ON PETITION |
| Filed: September 30, 2004 | : | |
| Attorney Docket No. 02987.00101 | : | |

This is a decision on the petition under 37 CFR 1.181, filed July 20, 2007, requesting the withdrawal of the holding of abandonment in the above-identified application and has been so treated.

The petition to withdraw the holding of abandonment is **GRANTED.**

The above-identified application was held abandoned for failure to timely reply to the non-final Office action mailed October 19, 2006, which set a shortened statutory period for reply of three (3) months. A reply was due on or before January 19, 2007. A Notice of Abandonment was mailed on May 15, 2007.

Petitioner states that the reply was in fact timely filed. To support this assertion, petitioner has submitted a copy of the return postcard, which acknowledges receipt by the U.S. Patent and Trademark Office (USTPO) on January 23, 2007 of 1. Response to 19 October 2006 Office Action (15 pages). Additionally, petitioner has supplied a copy of the previously mailed correspondence, which bears a certificate of mailing date of January 19, 2007.

The reply acknowledged as having been received in the USPTO on January 23, 2007 (certificate of mailing date of January 19, 2007) is not of record in the application file and cannot be located. However, MPEP 503 states that "A post card receipt which itemizes and properly identifies the items which are being filed serves as *prima facie* evidence of receipt in the USPTO of all the items listed thereon on the date stamped thereon by the USPTO." Accordingly, it is concluded that the reply was timely received in the USPTO but was apparently lost after receipt thereof.

In view of the above, the holding of abandonment is hereby withdrawn and the application restored to pending status.

A petition to withdraw the holding of abandonment under the provisions of 37 CFR 1.181 does not require a fee and none has been charged.

This matter is being referred to Technology Center AU 2876 for further examination on the merits.

Telephone inquiries concerning this decision should be directed to the undersigned at (571) 272-3206.

Liana Walsh
Petitions Examiner
Office of Petitions

## SPE RESPONSE FOR CERTIFICATE OF CORRECTION

Paper No.: _____

**DATE** : 2/1/2007

**TO SPE OF** : ART UNIT 2800 (2852)

**SUBJECT** : Request for Certificate of Correction on Patent No.: 7,113,714

A response is requested with respect to the accompanying request for a certificate of correction.

Please complete this form and return with file ***(PFW)**, within **7** days to:
**Certificates of Correction Branch – 2900 South Tower ste.9A43A**
Palm location **7580** or forward ***(IFW)** to scanning using document code **COCX**.

***ok to enter references, as req. in Cof C ?**

*Ernest C. White, LIE (703) 308-9390x122*

**Thank You For Your Assistance** — **Certificates of Correction Branch**

**The request for issuing the above-identified correction(s) is hereby:**
Note your decision on the appropriate box.

- ☒ **Approved** — All changes apply.
- ☐ **Approved in Part** — Specify below which changes **do not** apply.
- ☐ **Denied** — State the reasons for denial below.

**Comments:**

S. Lee — FOR **SPE**

2852 — **Art Unit**

UNITED STATES PATENT AND TRADEMARK OFFICE

Commissioner for Patents
United States Patent and Trademark Office
P.O. Box 1450
Alexandria, VA 22313-1450
www.uspto.gov

COPY MAILED

APR 28 2009

OFFICE OF PETITIONS

**Marger Johnson & McCollom, P.C.**
**210 SW Morrison Street, Suite 400**
**Portland, OR 97204**

| | | |
|---|---|---|
| In re Application of | : | |
| Claude J. Chauveau | : | |
| Application No. 10/956,503 | : | DECISION ON PETITION |
| Filed: October 1, 2004 | : | TO WITHDRAW |
| Attorney Docket No. 7764-2 | : | FROM RECORD |
| | : | |

This is a decision on the Request to Withdraw as attorney or agent of record under 37 C.F.R. § 1.36(b), filed April 6, 2009.

The request is **APPROVED**.

A grantable request to withdraw as attorney/agent of record must be signed by every attorney/agent seeking to withdraw or contain a clear indication that one attorney is signing on behalf of another/others. A request to withdraw will not be approved unless at least 30 (thirty) days would remain between the date of approval and the later of the expiration date of a time to file a response or the expiration date of the maximum time period which can be extended under 37 C.F.R. § 1.136(a).

The request was signed by Alan T. McCollom on behalf of attorney/agents associated with customer number 20575. All attorneys/agents associated with customer number 20575.

Applicant is reminded that there is no attorney of record at this time.

The request to change the correspondence of record is not acceptable as the requested correspondence address is not that of (1) the first named signing inventor; or (2) an intervening assignee of the entire interest under 37 C.F.R. 3.71. Accordingly, all correspondence will be mailed to address of the first signing inventor at the first copied address below, since no assignee has properly intervened in this application. A courtesy copy of this decision will be mailed to the address noted on the request. If this person(s) desire to receive future correspondence regarding this application, the proper power of attorney documents and a Statement under 37 CFR 3.73(b) must be submitted.

Telephone inquiries concerning this decision should be directed to Kimberly Inabinet at 571-272-4618.

Kimberly Inabinet
Petitions Examiner
Office of Petitions

cc: Claude J. Chauveau
14296 NW Bordeaux Lane
Portland, OR 97229

cc: TimeData Corporation
c/o Parmjit S. Kang
10 East 13th Street, #PHB
New York, NY 10003

UNITED STATES PATENT AND TRADEMARK OFFICE

UNITED STATES DEPARTMENT OF COMMERCE
United States Patent and Trademark Office
Address: COMMISSIONER FOR PATENTS
P.O. Box 1450
Alexandria, Virginia 22313-1450
www.uspto.gov

| APPLICATION NUMBER | FILING OR 371(C) DATE | FIRST NAMED APPLICANT | ATTY. DOCKET NO./TITLE |
|---|---|---|---|
| 10/956,503 | 10/01/2004 | Claude J. Chauveau | 7764-2 |

**CONFIRMATION NO. 8617**

**POWER OF ATTORNEY NOTICE**

20575
MARGER JOHNSON & MCCOLLOM, P.C.
210 SW MORRISON STREET, SUITE 400
PORTLAND, OR 97204

*OC000000035691011*

Date Mailed: 04/27/2009

## NOTICE REGARDING CHANGE OF POWER OF ATTORNEY

This is in response to the Power of Attorney filed 04/06/2009.

- The withdrawal as attorney in this application has been accepted. Future correspondence will be mailed to the new address of record. 37 CFR 1.33.

/kainabinet/

---

Office of Data Management, Application Assistance Unit (571) 272-4000, or (571) 272-4200, or 1-888-786-0101

UNITED STATES PATENT AND TRADEMARK OFFICE

Commissioner for Patents
United States Patent and Trademark Office
P.O. Box 1450
Alexandria, VA 22313-1450
www.uspto.gov

**CHARLES HOLLAND**
**MORRISON AND FOERSTER LLP**
**755 PAGE MILL RD**
**PALO ALTO, CA 94304**

**COPY MAILED**

NOV 0 6 2008

**OFFICE OF PETITIONS**

| | | |
|---|---|---|
| In re Application of | : | |
| Edward PEREZ | : | |
| Application No. 10/956,511 | : | DECISION ON PETITION |
| Filed: October 1, 2004 | : | TO WITHDRAW |
| Attorney Docket No. TSSNNZ00303 | : | FROM RECORD |
| | : | |

This is a decision on the Request to Withdraw as attorney or agent of record under 37 C.F.R. § 1.36(b), filed December 5, 2005.

The request is **NOT APPROVED** as moot.

A review of the file record indicates that the power of attorney to Morrison & Foerster LLP, has been revoked by the assignee of the patent application on December 29, 2005. Accordingly, the request to withdraw under 37 C.F.R. § 1.36(b) is moot.

All future communication from the Office will be directed to the address indicated below until otherwise properly notified by the applicant.

Telephone inquires concerning this decision should be directed to undersigned at 571-272- 6735.

Diane Goodwyn
Petitions Examiner
Office of Petitions

cc: LEVINE BAGADE LLP
ATTN: LAURA SHIRES
2483 EAST BAYSHORE ROAD,
SUITE 100
PALO ALTO, CA 94303

UNITED STATES PATENT AND TRADEMARK OFFICE

Commissioner for Patents
United States Patent and Trademark Office
P.O. Box 1450
Alexandria, VA 22313-1450
www.uspto.gov

**LEVINE BAGADE HAN LLP**
**2483 EAST BAYSHORE ROAD, SUITE 100**
**PALO ALTO, CA 94303**

COPY MAILED

NOV 2 4 2008

OFFICE OF PETITIONS

| | | |
|---|---|---|
| In re Application of | : | |
| Edward PEREZ | : | |
| Application No. 10/956,511 | : | DECISION ON PETITION |
| Filed: October 1, 2004 | : | TO WITHDRAW |
| Attorney Docket No. TSSNNZ00303 | : | FROM RECORD |
| | : | |

This is a decision on the Request to Withdraw as attorney or agent of record under 37 C.F.R. § 1.36(b), filed October 15, 2008.

The request is **NOT APPROVED** as moot.

A review of the file record indicates that the power of attorney to Levine Bagade LLP, has been revoked by the assignee of the patent application on July 28, 2008. Accordingly, the request to withdraw under 37 C.F.R. § 1.36(b) is moot.

The correspondence address of record is the address indicated below until otherwise properly notified by the applicant.

Telephone inquires concerning this decision should be directed to undersigned at 571-272- 6735.

Diane Goodwyn
Petitions Examiner
Office of Petitions

cc: E. THOMAS WHEELOCK
TISSUE ENGINEERING REFRACTION, INC.
P.O. BOX 61168
PALO ALTO, CA 94306

UNITED STATES PATENT AND TRADEMARK OFFICE

UNITED STATES DEPARTMENT OF COMMERCE
United States Patent and Trademark Office
Address: COMMISSIONER FOR PATENTS
P.O. Box 1450
Alexandria, Virginia 22313-1450
www.uspto.gov

| APPLICATION NO. | FILING DATE | FIRST NAMED INVENTOR | ATTORNEY DOCKET NO. | CONFIRMATION NO. |
|---|---|---|---|---|
| 10/956,551 | 10/01/2004 | Balaji Rao Garimella | 67097-129; EH-10999 | 8735 |

26096 7590 03/16/2009
CARLSON, GASKEY & OLDS, P.C.
400 WEST MAPLE ROAD
SUITE 350
BIRMINGHAM, MI 48009

| EXAMINER |
|---|
| STONER, KILEY SHAWN |

| ART UNIT | PAPER NUMBER |
|---|---|
| 1793 | |

| MAIL DATE | DELIVERY MODE |
|---|---|
| 03/16/2009 | PAPER |

**Please find below and/or attached an Office communication concerning this application or proceeding.**

The time period for reply, if any, is set in the attached communication.

UNITED STATES PATENT AND TRADEMARK OFFICE

Commissioner for Patents
United States Patent and Trademark Office
P.O. Box 1450
Alexandria, VA 22313-1450
www.uspto.gov

wk

Mailed : 3-16-09

| | | |
|---|---|---|
| In re Application of | : | DECISION ON |
| Garimella | : | PETITION |
| Serial No. 10/956,551 | : | |
| Filed: October 1, 2004 | | |
| For: MICROWAVE BRAZING OF AIRFOIL CRACKS | | |

This is a decision on the PETITION FILED UNDER 37 CFR 1.181 filed February 2, 2009 to request entry and consideration of evidence of prior invention with regard to a cited reference in the prosecution.

In response to a non-final office action mailed on April 10, 2008, Petitioner's representative filed a response and Declaration under 1.131. On October 1, 2008, the Examiner issued a final office action. The Petitioner asserts that the Examiner denied entry of the 1.131 Declaration. A review of the file indicates that the Declaration was entered and considered but found to be ineffective to overcome the Drake et al, reference. On December 1, 2008, Petitioner's representative filed a response to the final office action arguing the Examiner's position on the Declaration. The Examiner maintained his position in the advisory mailed out on December 30, 2008.

A review of the record indicates that the 1.131 Declaration has been entered into the file and has been considered by the Examiner.

**DECISION**

Accordingly, the petition is **DISMISSED**.

Gregory L. Mills, Acting Director
Technology Center 1700
Chemical and Materials Engineering

Karin H. Butchko
CARLSON, GASKEY & OLDS, P.C.
400 WEST MAPLE ROAD
SUITE 350
BIRMINGHAM MI 48009

UNITED STATES PATENT AND TRADEMARK OFFICE

COMMISSIONER FOR PATENTS
UNITED STATES PATENT AND TRADEMARK OFFICE
P.O. BOX 1450
ALEXANDRIA, VA 22313-1450
www.uspto.gov

GOOGLE / FENWICK
SILICON VALLEY CENTER
801 CALIFORNIA ST.
MOUNTAIN VIEW CA 94041

COPY MAILED
AUG 3 1 2009
OFFICE OF PETITIONS

| | | |
|---|---|---|
| In re Application of | : | |
| Whitten et al. | : | |
| Application No. 10/956564 | : | ON REQUEST FOR RECONSIDERATION |
| Filing or 371(c) Date: 10/01/2004 | : | OF PATENT TERM ADJUSTMENT |
| Atty Docket No.: | : | |
| 24207-08843 | : | |

This is in response to the REQUEST FOR RECONSIDERATION OF PATENT TERM ADJUSTMENT UNDER 37 C.F.R. § 1.705(b), filed June 24, 2009. Applicant submits that the correct patent term adjustment to be indicated on the patent is 500 days, not 394 days as calculated by the Office as of the mailing of the initial determination of patent term adjustment. Applicant requests this correction solely on the basis that the Office will take in excess of three years to issue this patent.

As the instant application for patent term adjustment requests reconsideration of the patent term adjustment as it relates to the Office's failure to issue the patent within 3 years of the filing date, the application for patent term adjustment under 37 CFR 1.705(b) is **DISMISSED as PREMATURE**.

Knowledge of the actual date the patent issues is required to calculate the amount, if any, of additional patent term patentee is entitled to for Office failure to issue the patent within 3 years. See § 1.702(b). (This is true even where a request for continued examination (RCE) was filed). The computer will not undertake the § 1.702(b) calculation until the actual date of issuance of the patent has been determined. Likewise, the computer will not calculate any further Office delay under § 1.702(a)(4) or applicant delay under § 1.704(c)(10) until the actual date of issuance of the patent has been determined. As such, the Office can not make a determination on the correctness of the patent term adjustment until the patent has issued.

Requesting reconsideration of the patent term adjustment to be indicated on the patent under 37 CFR 1.705(b) based on the initial determination of patent term adjustment and a projected issuance date of the patent (or even the filing date of the request for continued examination) is premature. Accordingly, it is appropriate to dismiss as premature such a request.

Rather than file an application for patent term adjustment under 37 CFR 1.705(b) contesting the 37 CFR 1.702(b) calculation at the time of the mailing of the notice of allowance, applicant is advised that they may wait until the time of the issuance of the patent and file a request for reconsideration of the patent term adjustment pursuant to 37 CFR 1.705(d). As the USPTO does not calculate the amount of time earned pursuant to 37 CFR 1.702(b) until the time of the issuance of the patent, the Office will consider any request for reconsideration of the patent term adjustment due to an error in the calculation of 37 CFR 1.702(b) to be timely if the request for reconsideration is filed within two months of the issuance of the patent. However, as to all other bases for contesting the initial determination of patent term adjustment received with the notice of allowance, applicant must timely file an application for patent term adjustment prior to the payment of the issue fee[1].

The Office acknowledges submission of the $200.00 fee set forth in 37 CFR 1.18(e) for consideration of the application for patent term adjustment under 37 CFR 1.705(b).

Any request for reconsideration of the patent term adjustment indicated on the patent must be timely filed within 2 months after issuance pursuant to 37 CFR 1.705(d) and must include payment of the required fee under 37 CFR 1.18(e).

The Office of Data Management has been advised of this decision. This application is being referred to the Office of Data Management for issuance of the patent.

Telephone inquiries specific to this decision should be directed to Attorney Derek Woods at (571) 272-3232.

Alesia Brown
Senior Petitions Attorney
Office of Petitions
Office of the Deputy Commissioner
for Patent Examination Policy

---

[1] For example, if applicant disputes both the calculation of patent term adjustment under 37 CFR 1.702(a)(1) for Office failure to mail a first Office action or notice of allowance not later than fourteen months after the date on which the application was filed and under 37 CFR 1.702(b) for Office failure to issue a patent within three years of the actual filing date of the application, then applicant must still timely file an application for patent term adjustment prior to the payment of the issue fee to contest the calculation of Office delay in issuing a first Office action or notice of allowance. See 37 CFR 1.705(b) and 35 U.S.C. 154(b)(3)(B). A dispute as to the calculation of the §1.702(a)(1) period raised on request for reconsideration of patent term adjustment under 37 CFR 1.705(d) will be dismissed as untimely filed.

UNITED STATES PATENT AND TRADEMARK OFFICE

UNITED STATES DEPARTMENT OF COMMERCE
United States Patent and Trademark Office
Address: COMMISSIONER FOR PATENTS
P.O. Box 1450
Alexandria, Virginia 22313-1450
www.uspto.gov

GOOGLE / FENWICK
SILICON VALLEY CENTER
801 CALIFORNIA ST.
MOUNTAIN VIEW, CA 94041

Mail Date: 04/21/2010

| | | |
|---|---|---|
| **Applicant** | : Alma W. Whitten | : DECISION ON REQUEST FOR |
| **Patent Number** | : 7603355 | : RECALCULATION of PATENT |
| **Issue Date** | : 10/13/2009 | : TERM ADJUSTMENT IN VIEW |
| **Appliction No** | : 10/956,564 | : OF WYETH AND NOTICE OF INTENT TO |
| **Filed** | : 10/01/2004 | : ISSUE CERTIFICATE OF CORRECTION |
| | | : |

The Request for Recalculation is **GRANTED** to the extent indicated.

The patent term adjustment has been determined to be **389** days. The USPTO will *sua sponte* issue a certificate of correction reflecting the amount of PTA days determined by the recalculation.

Prior to the issuance of the certificate of correction, the USPTO will afford patentee an opportunity to be heard and request reconsideration. Accordingly, patentee has **one month or thirty (30) days**, whichever is longer, to file a request for reconsideration of this patent term adjustment calculation. See 35 U.S.C. 154(b)(3)(B)(ii) and 37 CFR 1.322(a)(4). No extensions of time will be granted under 37 CFR 1.136.

Patentee should use document code PET.OP if electronically filing a request for reconsideration of this patent term adjustment calculation. The patentee must also include the information required by 37 CFR 1.705(b)(2) and the fee required by 37 CFR 1.18(e). If patentee does not file a timely request for reconsideration of this patent term adjustment calculation including the information required by 37 CFR 1.705(b)(2) and the fee required by 37 CFR 1.18(e), the USPTO will issue a certificate of correction reflecting the PTA determination noted above.

Patentee should be aware that in order to preserve the right to review in the United States District Court for the District of Columbia of the USPTO patent term adjustment determination, patentee must ensure that he or she also take the steps required under 35 U.S.C. 154(b)(4)(A) in a timely manner. Nothing in the request for recalculation should be construed as providing an alternative time frame for commencing a civil action under 35 U.S.C. 154(b)(4)(A).

Any questions concerning this decision should be directed to the Office of Patent Legal Administration at 571-272-7702.

UNITED STATES PATENT AND TRADEMARK OFFICE

Commissioner for Patents
United States Patent and Trademark Office
P.O. Box 1450
Alexandria, VA 22313-1450
www.uspto.gov

MAR 24 2005

MAILED

MAR 24 2005
OFFICE OF THE DIRECTOR
TC 3600

BLAKELY SOKOLOFF TAYLOR & ZAFMAN
12400 Wilshire Boulevard
Seventh Floor
Los Angeles, CA 90025-1030

In re application of
Scott Faber et al.
Application No. 10/956,571
Filed: October 01, 2004
For: METHOD AND SYSTEM TO CONNECT CONSUMERS TO INFORMATION

**DECISION ON PETITION TO MAKE SPECIAL (ACCELERATED EXAMINATION)**

This is in response to the petition filed on February 22, 2005 to make the above-identified application special on the basis of special examining procedure for certain new applications - accelerated examination as set forth in MPEP § 708.02 VIII.

The requirements for granting special status under this section are: (A) a petition to make special accompanied by the fee set forth in 37 CFR 1.17(i); (B) all claims being directed to a single invention, or an election without traverse if the Office determines that all the claims are not directed to a single invention; (C) a statement that a pre-examination search was made listing the field of search; (D) one copy of each of the references deemed most closely related to the subject matter encompassed by the claims if said references are not already of record; and (E) a detailed discussion of how the claimed subject matter is patentable over the references in accordance with 37 CFR 1.111 (b) and (c).

Since all of the requirements for special status under MPEP § 708.02 VIII have been met, the petition is **GRANTED**.

The examiner is directed (1) to make an interference search for possible interfering applications, (2) to promptly examine this application out of turn, and (3) if any interfering application is discovered, to examine such application simultaneously and state in the first official letter of such application that it is being taken out of turn because of a possible interference.

Petitioner is advised that this application will continue to be special, throughout its entire prosecution and pendency, including interference or appeal, if any, only if petitioner makes a prompt ***bona fide*** effort, in response to each Office action, to place the application in condition for allowance, even if it is necessary to conduct an interview with the examiner to accomplish this purpose.

**SUMMARY**: Petition to Make Special **GRANTED**.

Steven N. Meyers
Special Programs Examiner
Technology Center 3600
(703) 308-3868

SNM/pav: 03/15/05

UNITED STATES PATENT AND TRADEMARK OFFICE

COMMISSIONER FOR PATENTS
UNITED STATES PATENT AND TRADEMARK OFFICE
P.O. BOX 1450
ALEXANDRIA, VA 22313-1450
WWW.USPTO.GOV

Paper No. None

GREENBERG TRAURIG, LLP (SV2)
2450 Colorado Avenue, Suite 400E
Santa Monica CA 90404

COPY MAILED

JUN 21 2007

OFFICE OF PETITIONS

In re Application of :
Scott Faber et al. :
Application No. 10/956,571 :
Filed: October 1, 2004 :
Attorney Docket No.: 076705-200502/US :
Title: METHOD AND SYSTEM TO CONNECT CONSUMERS TO INFORMATION :

DECISION ON PETITION
UNDER 37 C.F.R. §1.181

This is a decision on the petition filed April 23, 2007, pursuant to 37 C.F.R. §1.181, requesting that the holding of abandonment in the above-identified application be withdrawn.

The above-identified application became abandoned for failure to reply in a timely manner to the non-final Office action, mailed October 4, 2006, which set a shortened statutory period for reply of three months. No response was received, and no extensions of time under the provisions of 37 C.F.R. §1.136(a) were requested. Accordingly, the above-identified application became abandoned on January 5, 2007. A notice of abandonment was mailed on April 18, 2007.

With the present petition, Petitioner has asserted that a response was submitted on March 5, 2007, along with a petition for a two-month extension of time, and has submitted an electronic acknowledgement receipt.

Petitioner has further submitted a copy of this submission, and it is noted that it contains a certificate of mailing dated March 5, 2007 - it is noted that March 4, 2007 fell on a Sunday.

The electronic file has been reviewed, and a copy of this response has been located in the same. The record further reveals that a two-month extension of time was received on March 5, 2007.

Petitioner has requested that the holding of abandonment in the above-identified application be withdrawn. It is clear that a response was timely submitted on March 5, 2007. Considering the facts and circumstances of the delay at issue, as set forth on petition, it is concluded that Petitioner has met her burden of establishing that a submission was timely submitted.

Accordingly, the petition under 37 C.F.R. §1.181(a) is **GRANTED**. The holding of abandonment is **WITHDRAWN**.

The Technology Center will be notified of this decision. The Technology Center's support staff will notify the Examiner of this decision, so that the response that was received on March 16, 2007 can be processed.

Telephone inquiries regarding *this decision* should be directed to the undersigned at (571) 272-3225[1]. All other inquiries concerning examination procedures or status of the application should be directed to the Technology Center.

**Paul Shanoski**
**Senior Attorney**
**Office of Petitions**
**United States Patent and Trademark Office**

1 Petitioner will note that all practice before the Office should be in writing, and the action of the Office will be based exclusively on the written record in the Office. See 37 C.F.R. §1.2. As such, Petitioner is reminded that no telephone discussion may be controlling or considered authority for Petitioner's further action(s).

MAILED

FEB 13 2007

Technology Center 2100

UNITED STATES PATENT AND TRADEMARK OFFICE

COMMISSIONER FOR PATENTS
UNITED STATES PATENT AND TRADEMARK OFFICE
P.O. BOX 1450
ALEXANDRIA, VA 22313-1450
www.uspto.gov

COOLEY GODWARD KRONISH LLP
ATTN: PATENT GROUP
1200 - 19th Street, NW
Suite 500
Washington, DC 20036-2402

| | | |
|---|---|---|
| In re Application of: Thomas, et al. | ) | |
| Application No. 10/956,573 | ) | |
| Filed: October 1, 2004 | ) | **DECISION ON PETITION TO MAKE** |
| For: SYSTEM AND METHOD FOR | ) | **SPECIAL UNDER 37 C.F.R. §1.102(d)** |
| HEURISTIC ANALYSIS TO IDENTIFY | ) | **AND M.P.E.P.§708.02(XI)** |
| PESTWARE | ) | |

This is a decision on the petition to make special filed August 24, 2006 under 37 C.F.R. §1.102(d) and M.P.E.P. §708.02(XI): Inventions For Countering Terrorism.

The petition is **DISMISSED**.

M.P.E.P. §708.02(XI), which sets forth the prerequisites for a grantable petition for Inventions For Countering Terrorism under 37 C.F.R. § 1.102(d), states in relevant part:

> International terrorism as defined in 18 U.S.C. 2331 includes "activities that - (A) involve violent acts or acts dangerous to human life that are a violation of the criminal laws of the United States or of any State, or that would be a criminal violation if committed within the jurisdiction of the United States or of any State; [and] (B) appear to be intended - (i) to intimidate or coerce a civilian population; (ii) to influence the policy of a government by intimidation or coercion; or (iii) to affect the conduct of a government by assassination or kidnapping..." The types of technology for countering terrorism could include, but are not limited to, systems for detecting/identifying explosives, aircraft sensors/security systems, and vehicular barricades/disabling systems.
>
> Applicants who desire that an application relating to inventions for countering terrorism be made special should file a petition with the petition fee under 37 CFR 1.17(h) requesting the U.S. Patent and Trademark Office to make the application special. The petition for special status should be accompanied by a statement explaining how the invention contributes to countering terrorism.

Petitioner's submission fails to meet the criteria set out with respect to countering terrorism in M.P.E.P. §708.02(XI). The claimed invention and specification are generally directed to a method and system blocking pestware activity and to protect information within many organizations from being accessed, often without a person or organization's knowledge. However, providing a system for blocking pestware activity and protecting organizational information does not directly prevent "violent acts or acts dangerous to human life that are a

violation of the criminal laws of the United States or of any State" or activities that would "be a criminal violation if committed within the jurisdiction of the United States or of any State". Furthermore, implementing on a computer system a method of protecting information does not directly prevent acts that appear to be intended "to intimidate or coerce a civilian population", "influence the policy of a government by intimidation or coercion", or "affect the conduct of a government by assassination or kidnapping".

Although it can be said that a computer implemented blocking pestware and limiting organizational information may incidentally limit acts of terrorism, the method and system disclosed do not teach directly preventing potential terrorist acts by identifying terrorists, identifying an individual as a terrorists or one who will perform a terrorist act.

In the USPTO's final ruling amending 37 CFR § 1.102 to eliminate the fee requirement for petitions to make special, the following standard was set for determining whether an invention qualified as "materially .... countering terrorism":

> The materiality standard does not permit an applicant to speculate as to how a hypothetical end-user might specially apply the invention in a manner that could counter-terrorism. Nor does such standard permit an applicant to enjoy the benefit of advanced examination merely because some minor aspect of the claimed invention may be directed to countering terrorism ...

The countering terrorism aspect of the instant invention consist only of the ability to limit access. Applicants do not particularly claim any improvement in discerning terrorism events from non-terrorism events. For instance, Applicant's method and system do not distinguish limiting access by authorized personnel, developers, hackers or even cyber terrorists.

Therefore, the instant petition fails to establish a sufficient nexus between the disclosed and claimed invention and preventing violent acts or acts dangerous to human life that are a violation of the criminal laws of the United States or of any State or activities that would be a criminal violation if committed within the jurisdiction of the United States or of any State, or preventing acts that appear to be intended to intimidate or coerce a civilian population, influence the policy of a government by intimidation or coercion, or affect the conduct of a government by assassination or kidnapping.

As a result, no advancement in the technology of countering terrorism has been persuasively shown.

Accordingly, the petition is **DISMISSED**. The application will be returned to the examiner's docket to await treatment on the merits in the normal order of examination.

Any request for reconsideration must be filed within TWO MONTHS of the mailing date of this decision.

It is suggested that Applicant review M.P.E.P. §708.02 regarding other grounds available for filing a petition to make special. In particular, note M.P.E.P. §708.02(VIII): Accelerated Examination, which does not place limitations on the subject matter of the application.

Brian L. Johnson
Quality Assurance Specialist
Technology Center 2100
Computer Architecture, Software, and Information Security
(571) 272-3595

UNITED STATES PATENT AND TRADEMARK OFFICE

Commissioner for Patents
United States Patent and Trademark Office
P.O. Box 1450
Alexandria, VA 22313-1450
www.uspto.gov

COOLEY GODWARD KRONISH LLP
ATTN: PATENT GROUP
THE BOWEN BUILDING
875 15TH STREET, N.W. SUITE 800
WASHINGTON DC 20005-2221

**COPY MAILED**

DEC 2 1 2006

**OFFICE OF PETITIONS**

| | | |
|---|---|---|
| In re Application of | : | |
| Thomas et al. | : | |
| Application No. 10/956,574 | : | DECISION ON PETITION |
| Filed: October 1, 2004 | : | TO MAKE SPECIAL UNDER |
| Attorney Docket No. WEBR-005/00US | : | 37 CFR 1.102(c)(2) |
| | : | |

This is a decision on the petition under 37 CFR 1.102(c)(2)(iii), filed August 24, 2006, to make the above-identified application special based on the invention materially contributing to countering terrorism as set forth in M.P.E.P. § 708.02, Section XI.

The petition is **DISMISSED**.

A grantable petition to make an application special under 37 CFR 1.102(c)(2)(iii) and MPEP § 708.02, Section XI: Inventions for Countering Terrorism, should state that special status is sought because the invention materially contributes to countering terrorism. International terrorism as defined in 18 U.S.C. 2331 includes:

> activities that - (A) involve violent acts or acts dangerous to human life that are a violation of the criminal laws of the United States or of any State, or that would be a criminal violation if committed within the jurisdiction of the United States or of any State; [and] (B) appear to be intended - (i) to intimidate or coerce a civilian population; (ii) to influence the policy of a government by intimidation or coercion; or (iii) to affect the conduct of a government by assassination or kidnapping...

If the disclosure it not clear on its face that the claimed invention is materially directed to countering terrorism, the petition must be accompanied by a statement by the applicant, assignee or a registered attorney/agent explaining how the materiality standard is met. The types of technology for countering terrorism could include, but are not limited to, systems for detecting/identifying explosives, aircraft sensors/security systems, and vehicular barricades/disabling systems. No fee is required.

The USPTO's final rule amending 37 CFR 1.102(c)(2) states:

> The materially standard does not permit an applicant to speculate as to how a hypothetical end-user might specially apply the invention in a manner that could counter terrorism. Nor does such standard permit an applicant to enjoy the benefit of advance examination merely because some minor aspect of the claimed invention may be directed to countering terrorism...[Response to Comment 65] applicants should not expect to have their petitions granted without a clear demonstration that the claimed invention is materially related to countering terrorism. 69 Fed. Reg. 56511 (Sept. 21, 2004)

The instant invention is directed to a system and method for pestware detection and removal. That the instant invention could provide systems and methods potentially useable in gathering information about a person or organization or that the instant invention has been implemented in one or more agencies of United States government, as alleged in the instant petition, does not in itself meet the materiality standard since the materially standard does not permit an applicant to speculate as to how a hypothetical end-user might specially apply the invention in a manner that could counter terrorism. Additionally, further steps would be required to actually offset or nullify terrorism. As a result, no advancement in the technology of countering terrorism has been persuasively shown.

Further correspondence with respect to this matter should be addressed as follows:

By Mail: Mail Stop PETITION
Commissioner for Patents
P. O. Box 1450
Alexandria, VA 22313-1450

By hand: U. S. Patent and Trademark Office
Customer Service Window, Mail Stop Petitions
Randolph Building
401 Dulany Street
Alexandria, VA 22314

By FAX: (571) 273-8300

Telephone inquiries concerning this decision should be directed to Ramesh Krishnamurthy at 571-272-4914, or to the undersigned at 571-272-7099.

All other inquiries concerning either the examination or status of the application should be directed to the Technology Center.

The application is being forwarded to the Technology Center Art Unit 2165 for action in its regular turn.

David Bucci
Petitions Examiner
Office of Petitions

UNITED STATES PATENT AND TRADEMARK OFFICE

Commissioner for Patents
United States Patent and Trademark Office
P.O. Box 1450
Alexandria, VA 22313-1450
www.uspto.gov

COOLEY GODWARD KRONISH LLP
ATTN: PATENT GROUP
THE BOWEN BUILDING
875 15TH STREET, N.W. SUITE 800
WASHINGTON DC 20005-2221

COPY MAILED

JAN 09 2007

OFFICE OF PETITIONS

| | | |
|---|---|---|
| In re Application of | : | |
| Bertman et al. | : | |
| Application No. 10/956,575 | : | DECISION ON PETITION |
| Filed: October 1, 2004 | : | TO MAKE SPECIAL UNDER |
| Attorney Docket No. WEBR-007/00US | : | 37 CFR 1.102(c)(2) |
| | : | |

This is a decision on the petition under 37 CFR 1.102(c)(2)(iii), filed August 24, 2006, to make the above-identified application special based on the invention materially contributing to countering terrorism as set forth in M.P.E.P. § 708.02, Section XI.

The petition is **DISMISSED**.

A grantable petition to make an application special under 37 CFR 1.102(c)(2)(iii) and MPEP § 708.02, Section XI: Inventions for Countering Terrorism, should state that special status is sought because the invention materially contributes to countering terrorism. International terrorism as defined in 18 U.S.C. 2331 includes:

> activities that - (A) involve violent acts or acts dangerous to human life that are a violation of the criminal laws of the United States or of any State, or that would be a criminal violation if committed within the jurisdiction of the United States or of any State; [and] (B) appear to be intended - (i) to intimidate or coerce a civilian population; (ii) to influence the policy of a government by intimidation or coercion; or (iii) to affect the conduct of a government by assassination or kidnapping...

If the disclosure it not clear on its face that the claimed invention is materially directed to countering terrorism, the petition must be accompanied by a statement by the applicant, assignee or a registered attorney/agent explaining how the materiality standard is met. The types of technology for countering terrorism could include, but are not limited to, systems for detecting/identifying explosives, aircraft sensors/security systems, and vehicular barricades/disabling systems. No fee is required.

The USPTO's final rule amending 37 CFR 1.102(c)(2) states:

> The materially standard does not permit an applicant to speculate as to how a hypothetical end-user might specially apply the invention in a manner that could counter terrorism. Nor does such standard permit an applicant to enjoy the benefit of advance examination merely because some minor aspect of the claimed invention may be directed to countering terrorism...[Response to Comment 65] applicants should not expect to have their petitions granted without a clear demonstration that the claimed invention is materially related to countering terrorism. 69 Fed. Reg. 56511 (Sept. 21, 2004)

The instant invention is directed to a system and method for actively operating malware. That the instant invention could potentially provide enhanced detection capability, as alleged in the instant petition, does not in itself meet the materiality standard since the materially standard does not permit an applicant to speculate as to how a hypothetical end-user might specially apply the invention in a manner that could counter terrorism. Additionally, further steps would be required to actually offset or nullify terrorism. As a result, no advancement in the technology of countering terrorism has been persuasively shown.

Further correspondence with respect to this matter should be addressed as follows:

By Mail: Mail Stop PETITION
Commissioner for Patents
P. O. Box 1450
Alexandria, VA 22313-1450

By hand: U. S. Patent and Trademark Office
Customer Service Window, Mail Stop Petitions
Randolph Building
401 Dulany Street
Alexandria, VA 22314

By FAX: (571) 273-8300

Telephone inquiries concerning this decision should be directed to Jefferey Harold at 571-272-7519, or to the undersigned at 571-272-7099.

All other inquiries concerning either the examination or status of the application should be directed to the Technology Center.

The application is being forwarded to the Technology Center Art Unit 2135 for action in its regular turn.

David Bucci
Petitions Examiner
Office of Petitions

UNITED STATES PATENT AND TRADEMARK OFFICE

UNITED STATES DEPARTMENT OF COMMERCE
United States Patent and Trademark Office
Address: COMMISSIONER FOR PATENTS
P.O. Box 1450
Alexandria, Virginia 22313-1450
www.uspto.gov

IBM CORPORATION
IPLAW SHCB/40-3
1701 NORTH STREET
ENDICOTT, NY 13760

Mail Date: 04/20/2010

| | | |
|---|---|---|
| **Applicant** | : Yan Moyaux | : DECISION ON REQUEST FOR |
| **Patent Number** | : 7657535 | : RECALCULATION of PATENT |
| **Issue Date** | : 02/02/2010 | : TERM ADJUSTMENT IN VIEW |
| **Appliction No** | : 10/956,579 | : OF WYETH AND NOTICE OF INTENT TO |
| **Filed** | : 10/01/2004 | : ISSUE CERTIFICATE OF CORRECTION |
| | | : |

The Request for Recalculation is **GRANTED** to the extent indicated.

The patent term adjustment has been determined to be **375** days. The USPTO will *sua sponte* issue a certificate of correction reflecting the amount of PTA days determined by the recalculation.

Prior to the issuance of the certificate of correction, the USPTO will afford patentee an opportunity to be heard and request reconsideration. Accordingly, patentee has **one month or thirty (30) days**, whichever is longer, to file a request for reconsideration of this patent term adjustment calculation. See 35 U.S.C. 154(b)(3)(B)(ii) and 37 CFR 1.322(a)(4). No extensions of time will be granted under 37 CFR 1.136.

Patentee should use document code PET.OP if electronically filing a request for reconsideration of this patent term adjustment calculation. The patentee must also include the information required by 37 CFR 1.705(b)(2) and the fee required by 37 CFR 1.18(e). If patentee does not file a timely request for reconsideration of this patent term adjustment calculation including the information required by 37 CFR 1.705(b)(2) and the fee required by 37 CFR 1.18(e), the USPTO will issue a certificate of correction reflecting the PTA determination noted above.

Patentee should be aware that in order to preserve the right to review in the United States District Court for the District of Columbia of the USPTO patent term adjustment determination, patentee must ensure that he or she also take the steps required under 35 U.S.C. 154(b)(4)(A) in a timely manner. Nothing in the request for recalculation should be construed as providing an alternative time frame for commencing a civil action under 35 U.S.C. 154(b)(4)(A).

Any questions concerning this decision should be directed to the Office of Patent Legal Administration at 571-272-7702.

UNITED STATES PATENT AND TRADEMARK OFFICE

COMMISSIONER FOR PATENTS
UNITED STATES PATENT AND TRADEMARK OFFICE
P.O. BOX 1450
ALEXANDRIA, VA 22313-1450
www.uspto.gov

Naval Research Laboratory
Code 1008.2
4555 Overlook Ave., S.W.
Washington, DC 20375-5320

**COPY MAILED**

FEB 07 2005

**OFFICE OF PETITIONS**

| | | |
|---|---|---|
| In re Application of | : | |
| Uyeda et al. | : | |
| Application No. 10/956,586 | : | |
| Filed: September 24, 2004 | : | ON PETITION |
| Attorney Docket Number: | : | |
| 4380-154 | : | |

This is a decision on the Petition[1], filed December 22, 2004, requesting the above-identified application be accorded a filing date of September 24, 2004, including pages 2-4 of the specification. The correspondence is properly treated as a petition under 37 CFR 1.53.

The petition is **granted**.

The application was filed on September 24, 2004. However, on November 17, 2004, the Office of Initial Patent Examination mailed a Notice to File Corrected Application Papers ("Notice"). The Notice informed Applicant that the application had been accorded a filing date, and required replacement drawings. The Notice also informed Applicant that pages 2-4 of the specification appeared to have been omitted from the application.

In response, Applicant files the instant petition wherein Applicant avers that pages 2-4 of the specification were included among 13 pages of Specification filed with the application on September 24, 2004, and were received by this Office as evidenced by the return-receipt postcard. In support, Petitioner provides a copy of a return receipt postcard acknowledging receipt of, *intern alia*, 13 pages of Specification filed on September 24, 2004.

---

[1] The Petition improperly identifies application serial number 10/956,584, but correctly identifies the title and inventor of application serial number 10/956,586, and includes a copy of the Notice to File Corrected Application Papers mailed in application serial number 10/956,586.

A review of the return receipt postcard reveals that Applicant is correct. The postcard acknowledges receipt of 13 pages of Specification by this Office on September 24, 2004. Applicant has also re-submitted pages 2-4 of the specification with the instant petition.

Evidence of receipt of any correspondence filed in the Patent and Trademark Office can be obtained by submitting a self-addressed postcard properly itemizing and identifying the paper or papers being filed. Upon receipt of the correspondence, the Patent and Trademark Office will check the listing on the post card against the papers submitted, making sure that all items listed are present and will then stamp the postcard with an Official date stamp and place the postcard in the outgoing mail. "A postcard receipt which itemizes and properly identifies the papers which are being filed serves as *prima facie* evidence of receipt in the PTO of all items listed thereon by the PTO." MPEP § 503.

Accordingly, the petition is granted. The copy of pages 2-4 of the specification, supplied with the instant petition on December 22, 2004, will be used for examination purposes.

No petition fee is required, and none has been charged.

The application will be returned to the Office of Initial Patent Examination for further processing as a nonprovisional application with a filing date of September 24, 2004, and an indication that pages 2-4 of the Specification were included among 13 pages of Specification that were present on filing on September 24, 2004.

Telephone inquiries concerning this matter should be directed to Petitions Attorney Derek L. Woods at (571) 272-3232.

Derek L. Woods
Petitions Attorney
Office of Petitions

UNITED STATES PATENT AND TRADEMARK OFFICE

Commissioner for Patents
United States Patent and Trademark Office
P.O. Box 1450
Alexandria, VA 22313-1450
www.uspto.gov

NAVAL RESEARCH LABORATORY
ASSOCIATE COUNSEL (PATENTS)
CODE 1008.2
4555 OVERLOOK AVENUE, S.W.
WASHINGTON, DC 20375-5320

**COPY MAILED**

NOV 14 2005

**OFFICE OF PETITIONS**

| | | |
|---|---|---|
| In re Application of | : | |
| Dan Zabetakis, et al. | : | |
| Application No. 10/956,593 | : | ON PETITION |
| Filed: September 30, 2004 | : | |
| Attorney Docket No. NC 96,143 | : | |

This is a decision on the petition under 37 CFR 1.137(b) filed September 27, 2005, to revive the above-identified application.

The petition is **GRANTED.**

The above-identified application became abandoned for failure to reply in a timely manner to the Notice to File Corrected Application Papers mailed January 1, 2005. The Notice set a period for reply of two (2) months from the mail date of the Notice. No extensions of time under the provisions of 37 CFR 1.136(a) were obtained. Accordingly, the above-identified application became abandoned on March 2, 2005.

The petition satisfies the conditions for revival pursuant to the provisions of 37 CFR 1.137 (b) in that (1) the reply in the form of Replacement drawings; (2) the petition fee; (3) the required statement of unintentional delay have been received. Accordingly, the petition filed September 27, 2005 is accepted as having been unintentionally delayed.

Telephone inquiries concerning this decision should be directed to the undersigned at (571) 272-3229.

This application matter is being forwarded to the Office of Initial Patent Examination for further processing.

Retta Williams

Retta Williams
Petitions Examiner
Office of Petitions

UNITED STATES PATENT AND TRADEMARK OFFICE

UNITED STATES DEPARTMENT OF COMMERCE
United States Patent and Trademark Office
Address: COMMISSIONER FOR PATENTS
P.O. Box 1450
Alexandria, Virginia 22313-1450
www.uspto.gov

| APPLICATION NO. | FILING DATE | FIRST NAMED INVENTOR | ATTORNEY DOCKET NO. | CONFIRMATION NO. |
|---|---|---|---|---|
| 10/956,593 | 09/30/2004 | Dan Zabetakis | 96143-US1 | 5220 |

26384 7590 06/17/2008
NAVAL RESEARCH LABORATORY
ASSOCIATE COUNSEL (PATENTS)
CODE 1008.2
4555 OVERLOOK AVENUE, S.W.
WASHINGTON, DC 20375-5320

| EXAMINER |
|---|
| COLE, ELIZABETH M |

| ART UNIT | PAPER NUMBER |
|---|---|
| 1794 | |

| MAIL DATE | DELIVERY MODE |
|---|---|
| 06/17/2008 | PAPER |

**Please find below and/or attached an Office communication concerning this application or proceeding.**

The time period for reply, if any, is set in the attached communication.

OIPE
FEB 04 2008
TRADEMARK OFFICE

IFW

Please type a plus sign (+) inside this box → ☐

PTO/SB/83 (2/00)
Approved for use through 10/31/02. OMB 0651-0035
Patent and Trademark Office; U.S. DEPARTMENT OF COMMERCE

Under the Paperwork Reduction Act of 1995, no persons are required to respond to a collection of information unless it displays a valid OMB control number.

# REQUEST FOR WITHDRAWAL AS ATTORNEY OR AGENT

| | |
|---|---|
| Application Number | 10/956,593 |
| Filing Date | 9/30/04 |
| First Named Inventor | Dan Zabetakis |
| Group Art Unit | 1771 |
| Examiner Name | E. M. Cole |
| Attorney Docket Number | 96143-US1 |

To: Assistant Commissioner for Patents
Washington, DC 20231

I hereby apply to withdraw as attorney or agent for the above identified patent application.

The reasons for this request are:

Rae Lynn P. Guest will be employed with the U.S. Patent and Trademark Office, effective February 4, 2008.

Approved 6-17-08
Jacqueline M. Stone
Jacqueline M. Stone, Director
Technology Center 1700

1. ☑ The correspondence address is NOT affected by this withdrawal.
2. ☐ Change the correspondence address and direct all future correspondence to:

**CORRESPONDENCE ADDRESS**

☐ Customer Number [ ] → *Place Customer Number Bar Code Label here*

*OR*

| | | | | | |
|---|---|---|---|---|---|
| ☐ Firm or Individual Name | | | | | |
| Address | | | | | |
| Address | | | | | |
| City | | State | | ZIP | |
| Country | | | | | |
| Telephone | | Fax | | | |

This request is enclosed in triplicate.

| | |
|---|---|
| Name | Rae Lynn P. Guest, Reg. No. 53,482 |
| Signature | Rae Lynn P. Guest |
| Date | 2/2/2008 |

*NOTE: Withdrawal is effective when approved rather than when received.*
*Unless there are at least 30 days between approval of withdrawal and the expiration date of a time period for response or possible extension period, the request to withdraw is normally disapproved.*

Burden Hour Statement: This form is estimated to take 0.2 hours to complete. Time will vary depending upon the needs of the individual case. Any comments on the amount of time you are required to complete this form should be sent to the Chief Information Officer, Patent and Trademark Office, Washington, DC 20231. DO NOT SEND FEES OR COMPLETED FORMS TO THIS ADDRESS. SEND TO: Assistant Commissioner for Patents, Washington, DC 20231.

UNITED STATES PATENT AND TRADEMARK OFFICE

Commissioner for Patents
United States Patent and Trademark Office
P.O. Box 1450
Alexandria, VA 22313-1450
www.uspto.gov

NAVAL RESEARCH LABORATORY
ASSOCIATE COUNSEL (PATENTS)
CODE 1008.2
4555 OVERLOOK AVENUE, S.W.
WASHINGTON DC 20375-5320

RECEIVED

DEC 23 2008

OFFICE OF PETITIONS

| | | |
|---|---|---|
| In re Application of | : | |
| Sheehan et al. | : | |
| Application No. 10/956596 | : | DECISION ON PETITION |
| Filed: 09/29/2004 | : | UNDER 37 CFR 1.78(a)(6) |
| Attorney Docket No. 96045-US2 | : | |

This is a decision on the petition under 37 CFR 1.78(a)(6), filed on September 17, 2008, to accept an unintentionally delayed claim under 35 U.S.C. §119(e) for the benefit of the prior-filed provisional application set forth in the amendment filed on February 27, 2006.

The petition is **GRANTED.**

A petition under 37 CFR 1.78(a)(6) is only applicable to those applications filed on or after November 29, 2000. Further, the petition is appropriate only after expiration of the period specified in 37 CFR 1.78(a)(5)(ii) and must be filed during the pendency of the nonprovisional application. In addition, the petition must be accompanied by:

**(1)** the reference required by 35 U.S.C. § 119(e) and 37 CFR 1.78(a)(5)(i) to the prior-filed application, unless previously submitted;
**(2)** the surcharge set forth in § 1.17(t); and
**(3)** a statement that the entire delay between the date the claim was due under 37 CFR 1.78(a)(5)(ii) and the date the claim was filed was unintentional. The Director may require additional information where there is a question whether the delay was unintentional.

Additionally, the instant nonprovisional application must be pending at the time of filing of the reference to the prior-filed provisional application as required by 37 CFR 1.78(a)(5)(ii). Further, the nonprovisional application claiming the benefit of the prior-filed provisional application must have been filed within twelve months of the filing date of the prior-filed provisional application.

All of the above requirements having been satisfied, the late claim for priority under 35 U.S.C. § 119(e) is accepted as being unintentionally delayed.

***The granting of the petition to accept the delayed benefit claim to the prior-filed application under 37 CFR 1.78(a)(6) should not be construed as meaning that this application is entitled to the benefit of the filing date of the prior-filed application. In order for this application to be entitled to the benefit of the prior-filed application, all other requirements under 35 U.S.C. §119(e) and 37 CFR 1.78(a)(4) and (a)(5) must be met. Similarly, the fact that the corrected Filing Receipt accompanying this decision on petition includes the prior-filed application should not be construed as meaning that applicant is entitled to the claim for benefit of priority to the prior-filed application noted thereon. Accordingly, the examiner will, in due course, consider this benefit claim and determine whether the application is entitled to the benefit of the earlier filing date.***

A corrected Filing Receipt, which includes the priority claim to the prior-filed provisional application, accompanies this decision on petition.

Any inquiries concerning this decision may be directed to Senior Petitions Attorney Douglas I. Wood at (571) 272-3231. All other inquiries concerning either the examination procedures or status of the application should be directed to the Technology Center.

The application is being forwarded to Technology Center AU 1792 for consideration by the examiner of the claim under 35 U.S.C. §119(e) for the benefit of priority to the prior-filed provisional application.

Anthony Knight
Supervisor
Office of Petitions

**ATTACHMENT**: Corrected Filing Receipt

UNITED STATES PATENT AND TRADEMARK OFFICE

UNITED STATES DEPARTMENT OF COMMERCE
United States Patent and Trademark Office
Address: COMMISSIONER FOR PATENTS
P.O. Box 1450
Alexandria, Virginia 22313-1450
www.uspto.gov

| APPLICATION NUMBER | FILING or 371(c) DATE | GRP ART UNIT | FIL FEE REC'D | ATTY.DOCKET.NO | TOT CLAIMS | IND CLAIMS |
|---|---|---|---|---|---|---|
| 10/956,596 | 09/29/2004 | 1792 | 1022 | 96045-US2 | 34 | 3 |

**CONFIRMATION NO. 5226**

**CORRECTED FILING RECEIPT**

26384
NAVAL RESEARCH LABORATORY
ASSOCIATE COUNSEL (PATENTS)
CODE 1008.2
4555 OVERLOOK AVENUE, S.W.
WASHINGTON, DC 20375-5320

*OC000000033595440*

Date Mailed: 12/15/2008

Receipt is acknowledged of this non-provisional patent application. The application will be taken up for examination in due course. Applicant will be notified as to the results of the examination. Any correspondence concerning the application must include the following identification information: the U.S. APPLICATION NUMBER, FILING DATE, NAME OF APPLICANT, and TITLE OF INVENTION. Fees transmitted by check or draft are subject to collection. Please verify the accuracy of the data presented on this receipt. **If an error is noted on this Filing Receipt, please submit a written request for a Filing Receipt Correction. Please provide a copy of this Filing Receipt with the changes noted thereon. If you received a "Notice to File Missing Parts" for this application, please submit any corrections to this Filing Receipt with your reply to the Notice. When the USPTO processes the reply to the Notice, the USPTO will generate another Filing Receipt incorporating the requested corrections**

**Applicant(s)**

Paul E. Sheehan, Springfield, VA;
Lloyd J. Whitman, Alexandria, VA;
William P. King, Atlanta, GA;

**Power of Attorney:** The patent practitioners associated with Customer Number 26384

**Domestic Priority data as claimed by applicant**

This appln claims benefit of 60/603,518 08/18/2004

**Foreign Applications**

**If Required, Foreign Filing License Granted:** 12/17/2004

The country code and number of your priority application, to be used for filing abroad under the Paris Convention, is **US 10/956,596**

**Projected Publication Date:** Not Applicable

**Non-Publication Request:** No

**Early Publication Request:** No

**Title**

THERMAL CONTROL OF DEPOSITION IN DIP PEN NANOLITHOGRAPHY

**Preliminary Class**

427

## PROTECTING YOUR INVENTION OUTSIDE THE UNITED STATES

Since the rights granted by a U.S. patent extend only throughout the territory of the United States and have no effect in a foreign country, an inventor who wishes patent protection in another country must apply for a patent in a specific country or in regional patent offices. Applicants may wish to consider the filing of an international application under the Patent Cooperation Treaty (PCT). An international (PCT) application generally has the same effect as a regular national patent application in each PCT-member country. The PCT process **simplifies** the filing of patent applications on the same invention in member countries, but **does not result** in a grant of "an international patent" and does not eliminate the need of applicants to file additional documents and fees in countries where patent protection is desired.

Almost every country has its own patent law, and a person desiring a patent in a particular country must make an application for patent in that country in accordance with its particular laws. Since the laws of many countries differ in various respects from the patent law of the United States, applicants are advised to seek guidance from specific foreign countries to ensure that patent rights are not lost prematurely.

Applicants also are advised that in the case of inventions made in the United States, the Director of the USPTO must issue a license before applicants can apply for a patent in a foreign country. The filing of a U.S. patent application serves as a request for a foreign filing license. The application's filing receipt contains further information and guidance as to the status of applicant's license for foreign filing.

Applicants may wish to consult the USPTO booklet, "General Information Concerning Patents" (specifically, the section entitled "Treaties and Foreign Patents") for more information on timeframes and deadlines for filing foreign patent applications. The guide is available either by contacting the USPTO Contact Center at 800-786-9199, or it can be viewed on the USPTO website at http://www.uspto.gov/web/offices/pac/doc/general/index.html.

For information on preventing theft of your intellectual property (patents, trademarks and copyrights), you may wish to consult the U.S. Government website, http://www.stopfakes.gov. Part of a Department of Commerce initiative, this website includes self-help "toolkits" giving innovators guidance on how to protect intellectual property in specific countries such as China, Korea and Mexico. For questions regarding patent enforcement issues, applicants may call the U.S. Government hotline at 1-866-999-HALT (1-866-999-4158).

## LICENSE FOR FOREIGN FILING UNDER

## Title 35, United States Code, Section 184

## Title 37, Code of Federal Regulations, 5.11 & 5.15

**GRANTED**

The applicant has been granted a license under 35 U.S.C. 184, if the phrase "IF REQUIRED, FOREIGN FILING LICENSE GRANTED" followed by a date appears on this form. Such licenses are issued in all applications where the conditions for issuance of a license have been met, regardless of whether or not a license may be required as

set forth in 37 CFR 5.15. The scope and limitations of this license are set forth in 37 CFR 5.15(a) unless an earlier license has been issued under 37 CFR 5.15(b). The license is subject to revocation upon written notification. The date indicated is the effective date of the license, unless an earlier license of similar scope has been granted under 37 CFR 5.13 or 5.14.

This license is to be retained by the licensee and may be used at any time on or after the effective date thereof unless it is revoked. This license is automatically transferred to any related applications(s) filed under 37 CFR 1.53(d). This license is not retroactive.

The grant of a license does not in any way lessen the responsibility of a licensee for the security of the subject matter as imposed by any Government contract or the provisions of existing laws relating to espionage and the national security or the export of technical data. Licensees should apprise themselves of current regulations especially with respect to certain countries, of other agencies, particularly the Office of Defense Trade Controls, Department of State (with respect to Arms, Munitions and Implements of War (22 CFR 121-128)); the Bureau of Industry and Security, Department of Commerce (15 CFR parts 730-774); the Office of Foreign AssetsControl, Department of Treasury (31 CFR Parts 500+) and the Department of Energy.

**NOT GRANTED**

No license under 35 U.S.C. 184 has been granted at this time, if the phrase "IF REQUIRED, FOREIGN FILING LICENSE GRANTED" DOES NOT appear on this form. Applicant may still petition for a license under 37 CFR 5.12, if a license is desired before the expiration of 6 months from the filing date of the application. If 6 months has lapsed from the filing date of this application and the licensee has not received any indication of a secrecy order under 35 U.S.C. 181, the licensee may foreign file the application pursuant to 37 CFR 5.15(b).

UNITED STATES PATENT AND TRADEMARK OFFICE

UNITED STATES DEPARTMENT OF COMMERCE
United States Patent and Trademark Office
Address: COMMISSIONER FOR PATENTS
P.O. Box 1450
Alexandria, Virginia 22313-1450
www.uspto.gov

KIMBERLY-CLARK WORLDWIDE, INC.
Tara Pohlkotte
2300 Winchester Rd.
NEENAH, WI 54956

Mail Date: 04/21/2010

| | | |
|---|---|---|
| **Applicant** | : Fung-jou Chen | : DECISION ON REQUEST FOR |
| **Patent Number** | : 7608070 | : RECALCULATION of PATENT |
| **Issue Date** | : 10/27/2009 | : TERM ADJUSTMENT IN VIEW |
| **Appliction No** | : 10/956,613 | : OF WYETH AND NOTICE OF INTENT TO |
| **Filed** | : 09/30/2004 | : ISSUE CERTIFICATE OF CORRECTION |
| | | : |

The Request for Recalculation is **GRANTED** to the extent indicated.

The patent term adjustment has been determined to be **1010** days. The USPTO will *sua sponte* issue a certificate of correction reflecting the amount of PTA days determined by the recalculation.

Prior to the issuance of the certificate of correction, the USPTO will afford patentee an opportunity to be heard and request reconsideration. Accordingly, patentee has **one month or thirty (30) days**, whichever is longer, to file a request for reconsideration of this patent term adjustment calculation. See 35 U.S.C. 154(b)(3)(B)(ii) and 37 CFR 1.322(a)(4). No extensions of time will be granted under 37 CFR 1.136.

Patentee should use document code PET.OP if electronically filing a request for reconsideration of this patent term adjustment calculation. The patentee must also include the information required by 37 CFR 1.705(b)(2) and the fee required by 37 CFR 1.18(e). If patentee does not file a timely request for reconsideration of this patent term adjustment calculation including the information required by 37 CFR 1.705(b)(2) and the fee required by 37 CFR 1.18(e), the USPTO will issue a certificate of correction reflecting the PTA determination noted above.

Patentee should be aware that in order to preserve the right to review in the United States District Court for the District of Columbia of the USPTO patent term adjustment determination, patentee must ensure that he or she also take the steps required under 35 U.S.C. 154(b)(4)(A) in a timely manner. Nothing in the request for recalculation should be construed as providing an alternative time frame for commencing a civil action under 35 U.S.C. 154(b)(4)(A).

Any questions concerning this decision should be directed to the Office of Patent Legal Administration at 571-272-7702.

UNITED STATES PATENT AND TRADEMARK OFFICE

UNITED STATES DEPARTMENT OF COMMERCE
United States Patent and Trademark Office
Address: COMMISSIONER FOR PATENTS
P.O. Box 1450
Alexandria, Virginia 22313-1450
www.uspto.gov

FISH & RICHARDSON P.C.
P.O. BOX 1022
MINNEAPOLIS, MN 55440-1022

Mail Date: 04/20/2010

| | | |
|---|---|---|
| **Applicant** | : Stan D. Tsai | : DECISION ON REQUEST FOR |
| **Patent Number** | : 7654885 | : RECALCULATION of PATENT |
| **Issue Date** | : 02/02/2010 | : TERM ADJUSTMENT IN VIEW |
| **Appliction No** | : 10/956,617 | : OF WYETH AND NOTICE OF INTENT TO |
| **Filed** | : 10/01/2004 | : ISSUE CERTIFICATE OF CORRECTION |
| | | : |

The Request for Recalculation is **GRANTED** to the extent indicated.

The patent term adjustment has been determined to be **802** days. The USPTO will *sua sponte* issue a certificate of correction reflecting the amount of PTA days determined by the recalculation.

Prior to the issuance of the certificate of correction, the USPTO will afford patentee an opportunity to be heard and request reconsideration. Accordingly, patentee has **one month or thirty (30) days**, whichever is longer, to file a request for reconsideration of this patent term adjustment calculation. See 35 U.S.C. 154(b)(3)(B)(ii) and 37 CFR 1.322(a)(4). No extensions of time will be granted under 37 CFR 1.136.

Patentee should use document code PET.OP if electronically filing a request for reconsideration of this patent term adjustment calculation. The patentee must also include the information required by 37 CFR 1.705(b)(2) and the fee required by 37 CFR 1.18(e). If patentee does not file a timely request for reconsideration of this patent term adjustment calculation including the information required by 37 CFR 1.705(b)(2) and the fee required by 37 CFR 1.18(e), the USPTO will issue a certificate of correction reflecting the PTA determination noted above.

Patentee should be aware that in order to preserve the right to review in the United States District Court for the District of Columbia of the USPTO patent term adjustment determination, patentee must ensure that he or she also take the steps required under 35 U.S.C. 154(b)(4)(A) in a timely manner. Nothing in the request for recalculation should be construed as providing an alternative time frame for commencing a civil action under 35 U.S.C. 154(b)(4)(A).

Any questions concerning this decision should be directed to the Office of Patent Legal Administration at 571-272-7702.

UNITED STATES PATENT AND TRADEMARK OFFICE

COMMISSIONER FOR PATENTS
UNITED STATES PATENT AND TRADEMARK OFFICE
P.O. BOX 1450
ALEXANDRIA, VA 22313-1450
www.uspto.gov

TOWNSEND AND TOWNSEND AND CREW, LLP
TWO EMBARCADERO CENTER
EIGHTH FLOOR
SAN FRANCISCO, CA 94111-3834

MAILED

JAN 1 0 2006

Technology Center 2100

| | | |
|---|---|---|
| In re Application of HIRAKAWA et al | : | |
| Application No.: 10/956,647 | : | DECISION ON PETITION |
| Filing Date: September 30, 2004 | : | FOR ACCELERATED |
| For: STORAGE SYSTEM AND DATA | : | EXAMINATION UNDER |
| PROCESSING SYSTEM | : | M.P.E.P. §708.02(VIII) |
| | : | |

This is a decision on the petition filed November 28, 2005 under 37 CFR §1.102(d) and M.P.E.P. §708.02(VIII): Accelerated Examination, to make the above-identified application special.

The petition is **GRANTED**.

M.P.E.P. §708.02, Section VIII, which sets out the prerequisites for a grantable petition for Accelerated Examination under 37 CFR §1.102(d), states in relevant part:

> A new application (one which has not received any examination by the examiner) may be granted special status provided that applicant (and this term includes applicant's attorney or agent) complies with each of the following items:
>
> (A) Submits a petition to make special accompanied by the fee set forth in 37 CFR 1.17(h);
>
> (B) Presents all claims directed to a single invention, or if the Office determines that all the claims presented are not obviously directed to a single invention, will make an election without traverse as a prerequisite to the grant of special status. The election may be made by applicant at the time of filing the petition for special status. Should applicant fail to include an election with the original papers or petition and the Office determines that a requirement should be made, the established telephone restriction practice will be followed. If otherwise proper, examination on the merits will proceed on claims drawn to the elected invention. If applicant refuses to make an election without traverse, the application will not be further examined at that time. The petition will be denied on the ground that the claims are not directed to a single invention, and the application will await action in its regular turn. Divisional applications directed to the nonelected inventions will not automatically be given special status based on papers filed with the petition in the parent application. Each such application must meet on its own all requirements for the new special status;

(C) Submits a statement(s) that a pre-examination search was made, listing the field of search by class and subclass, publication, Chemical Abstracts, foreign patents, etc. >The pre-examination search must be directed to the invention as claimed in the application for which special status is requested.< A search made by a foreign patent office satisfies this requirement >if the claims in the corresponding foreign application are of the same or similar scope to the claims in the U.S. application for which special status is requested<;

(D) Submits one copy each of the references deemed most closely related to the subject matter encompassed by the claims if said references are not already of record; and

(E) Submits a detailed discussion of the references, which discussion points out, with the particularity required by 37 CFR 1.111 (b) and (c), how the claimed subject matter is patentable over the references.

Because the petition filed November 28, 2005 meets the criteria set forth above, the petition to make special is **GRANTED**.

The application file is being forwarded to the Examiner for accelerated examination in accordance with M.P.E.P. §708.02, Section VIII. If the application is subsequently allowed, it will be given priority for printing. See M.P.E.P. §1309.

Pinchus M. Laufer
Special Programs Examiner
Technology Center 2100
Computer Architecture, Software, and Information Security
571-272-3599

UNITED STATES PATENT AND TRADEMARK OFFICE

UNITED STATES DEPARTMENT OF COMMERCE
United States Patent and Trademark Office
Address: COMMISSIONER FOR PATENTS
P.O. Box 1450
Alexandria, Virginia 22313-1450
www.uspto.gov

| APPL NO. | FILING OR 371 (c) DATE | ART UNIT | FIL FEE REC'D | ATTY.DOCKET NO | DRAWINGS | TOT CLMS | IND CLMS |
|---|---|---|---|---|---|---|---|
| 10/956,648 | 09/30/2004 | 1624 | 790 | A-865 | | 13 | 2 |

**CONFIRMATION NO. 8197**

**CORRECTED FILING RECEIPT**

*OC000000015181593*

U.S.Patent Operations/RVP
AMGEN INC.
Dept. 4300,M/S 27-4-A
One Amgen Center Drive
Thousand Oaks, CA 91320-1799

Date Mailed: 02/15/2005

Receipt is acknowledged of this regular Patent Application. It will be considered in its order and you will be notified as to the results of the examination. Be sure to provide the U.S. APPLICATION NUMBER, FILING DATE, NAME OF APPLICANT, and TITLE OF INVENTION when inquiring about this application. Fees transmitted by check or draft are subject to collection. Please verify the accuracy of the data presented on this receipt. **If an error is noted on this Filing Receipt, please write to the Office of Initial Patent Examination's Filing Receipt Corrections, facsimile number 703-746-9195. Please provide a copy of this Filing Receipt with the changes noted thereon. If you received a "Notice to File Missing Parts" for this application, please submit any corrections to this Filing Receipt with your reply to the Notice. When the USPTO processes the reply to the Notice, the USPTO will generate another Filing Receipt incorporating the requested corrections (if appropriate).**

**Applicant(s)**

Ning Chen, Thousand Oaks, CA;
Thomas Nixey, Newbury Park, CA;
Mark H. Norman, Thousand Oaks, CA;

**Assignment For Published Patent Application**

Amgen Inc.

**Power of Attorney:** The patent practitioners associated with Customer Number **21069**.

**Domestic Priority data as claimed by applicant**

**Foreign Applications**

**If Required, Foreign Filing License Granted:** 01/04/2005

**The country code and number of your priority application, to be used for filing abroad under the Paris Convention, is US10/956,648**

**Projected Publication Date:** 03/30/2006

**Non-Publication Request:** No

**Early Publication Request:** No

**Title**

Vanilloid receptor ligands and their use in treatments

**Preliminary Class**

544

---

## LICENSE FOR FOREIGN FILING UNDER
## Title 35, United States Code, Section 184
## Title 37, Code of Federal Regulations, 5.11 & 5.15

**GRANTED**

The applicant has been granted a license under 35 U.S.C. 184, if the phrase "IF REQUIRED, FOREIGN FILING LICENSE GRANTED" followed by a date appears on this form. Such licenses are issued in all applications where the conditions for issuance of a license have been met, regardless of whether or not a license may be required as set forth in 37 CFR 5.15. The scope and limitations of this license are set forth in 37 CFR 5.15(a) unless an earlier license has been issued under 37 CFR 5.15(b). The license is subject to revocation upon written notification. The date indicated is the effective date of the license, unless an earlier license of similar scope has been granted under 37 CFR 5.13 or 5.14.

This license is to be retained by the licensee and may be used at any time on or after the effective date thereof unless it is revoked. This license is automatically transferred to any related applications(s) filed under 37 CFR 1.53(d). This license is not retroactive.

The grant of a license does not in any way lessen the responsibility of a licensee for the security of the subject matter as imposed by any Government contract or the provisions of existing laws relating to espionage and the national security or the export of technical data. Licensees should apprise themselves of current regulations especially with respect to certain countries, of other agencies, particularly the Office of Defense Trade Controls, Department of State (with respect to Arms, Munitions and Implements of War (22 CFR 121-128)); the Office of Export Administration, Department of Commerce (15 CFR 370.10 (j)); the Office of Foreign Assets Control, Department of Treasury (31 CFR Parts 500+) and the Department of Energy.

**NOT GRANTED**

No license under 35 U.S.C. 184 has been granted at this time, if the phrase "IF REQUIRED, FOREIGN FILING LICENSE GRANTED" DOES NOT appear on this form. Applicant may still petition for a license under 37 CFR 5.12, if a license is desired before the expiration of 6 months from the filing date of the application. If 6 months has lapsed from the filing date of this application and the licensee has not received any indication of a secrecy order under 35 U.S.C. 181, the licensee may foreign file the application pursuant to 37 CFR 5.15(b).

UNITED STATES PATENT AND TRADEMARK OFFICE

COMMISSIONER FOR PATENTS
UNITED STATES PATENT AND TRADEMARK OFFICE
P.O. BOX 1450
ALEXANDRIA, VA 22313-1450
www.uspto.gov

Paper No.

FOLEY & LARDNER LLP
150 EAST GILMAN STREET
P.O. BOX 1497
MADISON WI 53701-1497

**COPY MAILED**

AUG 0 6 2009

**OFFICE OF PETITIONS**

| | | |
|---|---|---|
| In re Application of | : | |
| Matthies et al. | : | |
| Application No. 10/956,661 | : | ON APPLICATION FOR |
| Filed: October 1, 2004 | : | PATENT TERM ADJUSTMENT |
| Atty Docket No. 088245-4073 | : | |

This is in response to the REQUEST FOR RECONSIDERATION OF PATENT TERM ADJUSTMENT UNDER 37 C.F.R. §1.705 filed January 23, 2009. Applicant submits that the patent term adjustment to be indicated on the patent is eight hundred sixty-three (863) days, not six hundred fifty-eight (658) days as calculated by the Office as of the mailing of the initial determination of patent term adjustment. Applicant requests this correction solely on the basis that the Office will take in excess of three years to issue this patent[1].

As the instant application for patent term adjustment requests reconsideration of the patent term adjustment as it relates to the Office's failure to issue the patent within 3 years of the filing date, the application for patent term adjustment under 37 CFR 1.705(b) is **DISMISSED as PREMATURE**.

Knowledge of the actual date the patent issues is required to calculate the amount, if any, of additional patent term patentee is entitled to for Office failure to issue the patent within 3 years. See § 1.702(b). (This is true even where a request for continued examination (RCE) was filed). The computer will not undertake the § 1.702(b) calculation until the actual date of

[1] Applicant takes into consideration that a request for continued examination (RCE) was filed in this application on April 23, 2008. An RCE cuts-off their ability to accumulate any additional patent term for over three year pendency. The 1.702(b) period excludes any period consumed by continued examination requested by applicant under 35 U.S.C. 132(b).

issuance of the patent has been determined. Likewise, the computer will not calculate any further Office delay under § 1.702(a)(4) or applicant delay under § 1.704(c)(10) until the actual date of issuance of the patent has been determined. As such, the Office can not make a determination on the correctness of the patent term adjustment until the patent has issued.

Requesting reconsideration of the patent term adjustment to be indicated on the patent under 37 CFR 1.705(b) based on the initial determination of patent term adjustment and a projected issuance date of the patent (or even the filing date of the request for continued examination) is premature. Accordingly, it is appropriate to dismiss as premature such a request.

Rather than file an application for patent term adjustment under 37 CFR 1.705(b) contesting the 37 CFR 1.702(b) calculation at the time of the mailing of the notice of allowance, applicant is advised that they may wait until the time of the issuance of the patent and file a request for reconsideration of the patent term adjustment pursuant to 37 CFR 1.705(d). As the USPTO does not calculate the amount of time earned pursuant to 37 CFR 1.702(b) until the time of the issuance of the patent, the Office will consider any request for reconsideration of the patent term adjustment due to an error in the calculation of 37 CFR 1.702(b) to be timely if the request for reconsideration is filed within two months of the issuance of the patent. However, as to all other bases for contesting the initial determination of patent term adjustment received with the notice of allowance, applicant must timely file an application for patent term adjustment prior to the payment of the issue fee[2].

The Office acknowledges submission of the $200.00 fee set forth in 37 CFR 1.18(e) for consideration of the application for patent term adjustment under 37 CFR 1.705(b).

---

[2] For example, if applicant disputes both the calculation of patent term adjustment under 37 CFR 1.702(a)(1) for Office failure to mail a first Office action or notice of allowance not later than fourteen months after the date on which the application was filed and under 37 CFR 1.702(b) for Office failure to issue a patent within three years of the actual filing date of the application, then applicant must still timely file an application for patent term adjustment prior to the payment of the issue fee to contest the calculation of Office delay in issuing a first Office action or notice of allowance. See 37 CFR 1.705(b) and 35 U.S.C. 154(b)(3)(B). A dispute as to the calculation of the §1.702(a)(1) period raised on request for reconsideration of patent term adjustment under 37 CFR 1.705(d) will be dismissed as untimely filed.

Any request for reconsideration of the patent term adjustment indicated on the patent must be timely filed within 2 months after issuance pursuant to 37 CFR 1.705(d) and must include payment of the required fee under 37 CFR 1.18(e).

The Office of Data Management has been advised of this decision. This application is being referred to the Office of Data Management for issuance of the patent.

Telephone inquiries specific to this decision should be directed to the undersigned at (571) 272-3219.

Nancy Johnson
Senior Petitions Attorney
Office of Petitions

UNITED STATES PATENT AND TRADEMARK OFFICE

Commissioner for Patents
United States Patent and Trademark Office
P.O. Box 1450
Alexandria, VA 22313-1450
www.uspto.gov

TOWNSEND AND TOWNSEND AND CREW
TWO EMBARCADERO CENTER
EIGHTH FLOOR
SAN FRANCISCO, CA 94111-3834

COPY MAILED
MAY 1 0 2006
OFFICE OF PETITIONS

| | | |
|---|---|---|
| In re Application of | : | |
| Long-Ji Lin et al | : | |
| Application No. 10/956,662 | : | DECISION ON PETITION |
| Filed: October 1, 2004 | : | TO WITHDRAW |
| Attorney Docket No. 017887-003820US | : | FROM RECORD |
| | : | |

This is a decision on the Request to Withdraw as attorney or agent of record under 37 C.F.R. § 1.36(b), filed September 7, 2005.

The petition is **NOT APPROVED** as moot.

A review of the file record indicates that the previously appointed power of attorney has been revoked by the assignee. Accordingly, the request to withdraw under 37 C.F.R. § 1.36(b) is moot.

All future communications from the Office will continue to be directed to the below-listed address until otherwise notified by applicant.

This application is being referred to Technology Center AU 2153.

Telephone inquires concerning this decision should be directed to Wan Laymon at 571-272-3220.

for
David Bucci
Petitions Examiner
Office of Petitions

cc: MORRISON & FOERSTER
425 MARKET STREET
SAN FRANCISCO, CA 94105-2482

UNITED STATES PATENT AND TRADEMARK OFFICE

Commissioner for Patents
United States Patent and Trademark Office
P.O. Box 1450
Alexandria, VA 22313-1450
www.uspto.gov

**SHEMWELL GREGORY & COURTNEY**
**4880 STEVENS CREEK BLVD., SUITE 201**
**SAN JOSE, CA 95129**

**COPY MAILED**

JUN 03 2005

**OFFICE OF PETITIONS**

In re Application of
Yongxiang Zhao et al
Application No. 10/956,674
Filed: October 1, 2004
Attorney Docket No. UNIT.P002

: DECISION ON PETITION
: UNDER 37 CFR 1.78(a)(3)

This is a decision on the petition under 37 CFR 1.78(a)(3), filed February 14, 2005, to accept an unintentionally delayed claim under 35 U.S.C. §§ 120 and 365(c) for the benefit of priority to prior-filed PCT Application No. PCT/CN03/00077, filed January 27, 2003, set forth in the amendment submitted concurrently with the instant petition.

The petition is **GRANTED**.

A petition for acceptance of a claim for late priority under 37 CFR 1.78(a)(3) is only applicable to those applications filed on or after November 29, 2000. Further, the petition is appropriate only after the expiration of the period specified in 37 CFR 1.78(a)(2)(ii). In addition, the petition under 37 CFR 1.78(a)(3) must be accompanied by:

**(1)** the reference required by 35 U.S.C. § 120 and 37 CFR 1.78(a)(2)(i) of the prior-filed application, unless previously submitted;
**(2)** the surcharge set forth in § 1.17(t); and
**(3)** a statement that the entire delay between the date the claim was due under 37 CFR 1.78(a)(2)(ii) and the date the claim was filed was unintentional. The Commissioner may require additional information where there is a question whether the delay was unintentional.

The instant nonprovisional application was filed after November 29, 2000, and the claim herein for the benefit of priority to the above-noted, prior-filed PCT application is submitted after expiration of the period specified in 37 CFR 1.78(a)(2)(ii). Therefore, this is a proper petition under 37 CFR 1.78(a)(3).

The petition complies with the requirements for a grantable petition under 37 CFR 1.78(a)(3) in that (1) a reference to the above-noted, prior-filed PCT application has been included in an amendment to the first sentence of the specification following the title, as provided by 37 CFR 1.78(a)(2)(iii); (2) the surcharge fee required by 37 CFR 1.17(t) has been submitted; and (3) the petition contains a proper statement of unintentional delay. Accordingly, having found that the instant petition for acceptance of an unintentionally delayed claim for the benefit of priority under

35 U.S.C. §§ 120 and 365(c) to the above-noted, prior-filed PCT application satisfies the conditions of 37 CFR 1.78(a)(3), the petition is granted.

It is noted that petitioner's amendment submitted with the instant petition improperly claims under the section for domestic priority benefit to foreign Chinese Application No. 02116536.1. Nevertheless, benefit of the aforementioned foreign application was properly placed under the section for priority, and therefore, will only be entered as such in Office records.

***The granting of the petition to accept the delayed benefit claim to the prior-filed application under 37 CFR 1.78(a)(3) should not be construed as meaning that the instant application is entitled to the benefit of the prior-filed application. In order for the instant application to be entitled to the benefit of the prior-filed application, all other requirements under 35 U.S.C. §§ 120 and 365(c) and 37 CFR 1.78(a)(1) and (a)(2) must be met. Similarly, the fact that the corrected Filing Receipt accompanying this decision on petition includes the prior-filed application should not be construed as meaning that applicant is entitled to the claim for benefit of priority to the prior-filed application noted thereon. Accordingly, the examiner will, in due course, consider this benefit claim and determine whether the instant application is entitled to the benefit of the earlier filing date.***

A corrected Filing Receipt, which includes the priority claim to the prior-filed PCT application, accompanies this decision on petition.

Any inquiries concerning this decision may be directed to Wan Laymon at (571) 272-3220. All other inquiries concerning either the examination procedures or status of the application should be directed to the Technology Center.

This application is being forwarded to the examiner of Technology Center Art Unit 2664 for appropriate action on the amendment filed February 14, 2005, including consideration of applicant's entitlement to claim benefit of priority under 35 U.S.C. §§ 120 and 365(c) to the above-noted, prior-filed PCT application.

Frances Hicks

Frances Hicks
Lead Petitions Examiner
Office of Petitions
Office of the Deputy Commissioner
for Patent Examination Policy

**ATTACHMENT** Corrected Filing Receipt

UNITED STATES PATENT AND TRADEMARK OFFICE

Commissioner for Patents
United States Patent and Trademark Office
P.O. Box 1450
Alexandria, VA 22313-1450
www.uspto.gov
DIW 02-05

REED SMITH LLP
435 SIXTH AVENUE
PITTSBURGH PA 15219-1886

**COPY MAILED**

FEB 22 2005

**OFFICE OF PETITIONS**

| | |
|---|---|
| In re Application of | : |
| Close, Slifko, Hudson, and Genise | : DECISION REFUSING STATUS |
| Application No. 10/956,679 | : UNDER 37 CFR 1.47(a) |
| Filed: 1 October, 2004 | : |
| Atty Docket No. 03-445-US | : |

This is in response to the petition filed under 37 CFR 1.47(a) on 24 January, 2005.

The petition is **DISMISSED**.

Rule 47 applicant is given TWO MONTHS from the mailing date of this decision to reply, correcting the below-noted deficiencies. Any reply should be entitled "Request for Reconsideration of Petition Under 37 CFR 1.47(a)," and should only address the deficiencies noted below, except that the reply may include an oath or declaration executed by the non-signing inventor. **FAILURE TO RESPOND WILL RESULT IN ABANDONMENT OF THE APPLICATION.** Extensions of time may be obtained in accordance with 37 CFR 1.136(a).

The above-identified application was filed on 1 October, 2004, without an executed oath or declaration. Accordingly, on 16 November, 2004, a Notice to File Missing Parts of Nonprovisional Application was mailed, requiring an executed oath or declaration and a surcharge for its late filing.

In response, on 24 January, 2005 (certificate of mailing date 18 January, 2005), petitioners filed the present petition, the late-filing surcharge, and a declaration naming Eric Close, Adam Slifko, Edison T. Hudson, and Ronald G. Genise as joint inventors and signed by all inventors except Hudson on behalf of themselves and non-signing joint inventor Hudson.

Petitioners assert that joint inventor Hudson has failed to sign the declaration.

A grantable petition under 37 CFR 1.47(a) requires:

(1) proof that the non-signing inventor cannot be reached or located, notwithstanding diligent effort, or refuses to sign the oath or declaration after having been presented with the application papers (specification, claims and drawings);

(2) an acceptable oath or declaration in compliance with 35 U.S.C. §§ 115 and 116;

(3) the petition fee;

(4) a surcharge of $130 or $65 (small entity) if the petition and/or declaration is not filed at the time of filing the application, and

(5) a statement of the last known address of the non-signing inventor.

The petition lacks item (1).

In regards to item (1), petitioners have not shown that joint inventor Hudson was sent or presented with a copy of the application as filed (specification, including claims, drawings, if any, and the declaration).[1] Based on the showing of record, it does not appear that the specification, including claims, and the drawings, were among the application papers sent to the non-signing inventor.

Petitioners may show proof that a copy of the application was sent or given to the non-signing inventor for review by providing a copy of the cover letter transmitting the application papers (specification, including claims, drawings, if any, and the declaration) to the non-signing inventor or details given in an affidavit or declaration of facts by a person having first-hand knowledge of the details.

Likewise, before a *bona fide* refusal to sign the declaration can be alleged, petitioners must show that a copy of the application was sent or given to the inventor. If the inventor refuses in writing, petitioners must submit a copy of that written refusal with any renewed petition. If the refusal was made orally to a person, then that person must provide details of the refusal in an affidavit or declaration of fact.

Further correspondence with respect to this matter should be addressed as follows:

---

[1] MPEP 409.03(d).

By mail: Mail Stop Petition
Commissioner for Patents
P.O. Box 1450
Alexandria, VA 22313-1450

By FAX: (703) 872-9306
Attn: Office of Petitions

By hand: Customer Service Window
Mail Stop Petition
Randolph Building
401 Dulany Street
Alexandria, VA 22314

Telephone inquiries related to this decision should be directed to the undersigned at 571-272-3231.

DWood

Douglas I. Wood
Senior Petitions Attorney
Office of Petitions

UNITED STATES PATENT AND TRADEMARK OFFICE

Commissioner for Patents
United States Patent and Trademark Office
P.O. Box 1450
Alexandria, VA 22313-1450
www.uspto.gov
DIW May-05

**COPY MAILED**

MAY 23 2005

**OFFICE OF PETITIONS**

REED SMITH LLP
435 SIXTH AVENUE
PITTSBURGH PA 15219-1886

| | |
|---|---|
| In re Application of | : |
| Close, Slifko, Hudson, and | : DECISION ACCORDING STATUS |
| Genise | : UNDER 37 CFR 1.47(a) |
| Application No. 10/956,679 | : |
| Filed: 1 October, 2004 | : |
| Atty Dckt No. 03-445-US | : |

This is in response to the renewed petition filed under 37 CFR 1.47(a) on 20 April, 2005.

The petition is **GRANTED**.

Petitioners have shown that the non-signing inventor, Edison T. Hudson, has refused to sign the declaration after having been sent a copy of the application papers. Specifically, petitioners have shown, via the statement of registered practicioner Robert D. Kucler, that a copy of the application was sent by E-mail to the non-signing inventor. However, the inventor acknowledged receipt of the application papers but refused to sign the declaration naming him as a joint inventor along with Eric Close, Adam Slifko, and Ronald G. Genise.

The above-identified application and papers have been reviewed and found in compliance with 37 CFR 1.47(a). This application is hereby accorded Rule 1.47(a) status.

As provided in Rule 1.47(c), this Office will forward notice of this application's filing to the non-signing inventor at the address given in the in the petition, not the declaration. Notice of the filing of this application will also be published in the *Official Gazette*.

The application is being referred to Technology Center 3653 for examination in due course.

Telephone inquiries related to this decision should be directed to the undersigned at 571-272-3231.

D Wood

Douglas I. Wood
Senior Petitions Attorney
Office of Petitions

UNITED STATES PATENT AND TRADEMARK OFFICE

Commissioner for Patents
United States Patent and Trademark Office
P.O. Box 1450
Alexandria, VA 22313-1450
www.uspto.gov
DIW May-05

Edison T. Hudson
118 Little Branch Trail
Chapel Hill NC 27517

**COPY MAILED**

MAY 23 2005

**OFFICE OF PETITIONS**

In re Application of
Close et al.
Application No. 10/956,679
Filed: 1 October, 2004
For: NETWORK ARCHITECTURE FOR REMOTE ROBOT WITH INTERCHANGEABLE ARMY

Dear Mr. Hudson:

You are named as a joint inventor in the above identified United States patent application, filed under the provisions of 35 U.S.C. 116 (United States Code), and 37 CFR 1.47(a), Rules of Practice in Patent Cases. Should a patent be granted on the application you will be designated therein as a joint inventor.

As a named inventor you are entitled to inspect any paper in the file wrapper of the application, order copies of all or any part thereof (at a prepaid cost per 37 CFR 1.19) or make your position of record in the application. Alternatively, you may arrange to do any of the preceding through a registered patent attorney or agent presenting written authorization from you. If you care to join the application, counsel of record (see below) would presumably assist you. Joining in the application would entail the filing of an appropriate oath or declaration by you pursuant to 37 CFR 1.63.

Telephone inquiries regarding this communication should be directed to the undersigned at 571/272-3231. Requests for information regarding your application should be directed to the File Information Unit at 703/308-2733. Information regarding how to pay for and order a copy of the application, or a specific paper in the application, should be directed to Certification Division at 703/308-9726 or 1-800-972-6382 (outside the Washington D.C. area).

D Wood

Douglas I. Wood
Senior Petitions Attorney
Office of Petitions

REED SMITH LLP
435 SIXTH AVENUE
PITTSBURGH PA 15219-1886

UNITED STATES PATENT AND TRADEMARK OFFICE

Commissioner for Patents
United States Patent and Trademark Office
P.O. Box 1450
Alexandria, VA 22313-1450
www.uspto.gov
DIW Apr-07

HONEYWELL INTERNATIONAL INC.
101 COLUMBIA ROAD
P O BOX 2245
MORRISTOWN NJ 07962-2245

**COPY MAILED**

APR 26 2007

**OFFICE OF PETITIONS**

| | | |
|---|---|---|
| In re Application of | : | |
| Kiff et al. | : | |
| Application No. 10/956,681 | : | DECISION ON PETITION |
| Filed: 1 October, 2004 | : | |
| Atty Docket No. 8364-92943 | : | |
| (H0008144-0556) | : | |

This is a decision on the petition filed on 29 January, 2007, under 37 CFR 1.137(b),[1] to revive the above-identified application.

The petition is **GRANTED**.

---

[1] Effective December 1, 1997, the provisions of 37 CFR 1.137(b) now provide that where the delay in reply was unintentional, a petition may be filed to revive an abandoned application or a lapsed patent pursuant to 37 CFR 1.137(b). A grantable petition filed under the provisions of 37 CFR 1.137(b) must be accompanied by:

(1) the required reply, unless previously filed. In a nonprovisional application abandoned for failure to prosecute, the required reply may be met by the filing of a continuing application. In a nonprovisional utility or plant application filed on or after June 8, 1995, and abandoned for failure to prosecute, the required reply may also be met by the filing of a request for continuing examination in compliance with § 1.114. In an application or patent, abandoned or lapsed for failure to pay the issue fee or any portion thereof, the required reply must be the payment of the issue fee or any outstanding balance thereof. In an application, abandoned for failure to pay the publication fee, the required reply must include payment of the publication fee.

(2) the petition fee as set forth in 37 CFR 1.17(m);

(3) a statement that the entire delay in filing the required reply from the due date for the reply until the filing of a grantable petition pursuant to 37 CFR 1.137(b) was unintentional. The Commissioner may required additional information where there is a question whether the delay was unintentional; and

(4) any terminal disclaimer (and fee as set forth in 37 CFR 1.20(d)) required pursuant to 37 CFR 1.137(c)).

The application became abandoned on 28 July, 2006, for failure to timely reply to the non-final Office action mailed on 27 April, 2006, which set a three (3)-month shortened statutory period for reply. No extensions of time under 37 CFR 1.136(a) were obtained.

Notice of Abandonment was mailed on 5 January, 2007.

Petitioners have filed an amendment as the required reply.

An extension of time under 37 CFR 1.136 must be filed prior to the expiration of the maximum extendable period for reply.[2] The three-month extension request filed on 29 January, 2007, was submitted more than three (3) months after the end of the period for reply to the non-final Office action mailed on 27 April, 2006, and therefore is unnecessary. The extension of time fee paid on 29 January, 2007, will be credited to counsel's deposit account as authorized.

The address in the petition is different than the correspondence address. A copy of this decision is being mailed to the address in the petition. All future correspondence, however, will be mailed solely to the address of record.

This application is being referred to Technology Center Art Unit 2612 for further processing.

Telephone inquiries concerning this matter may be directed to the undersigned at (571)272-3231.

D Wood

Douglas I. Wood
Senior Petitions Attorney
Office of Petitions

Cc: WELSH & KATZ, LTD.
120 SOUTH RIVERSIDE - 22ND FLOOR
CHICAGO IL 60606

---

[2] See In re Application of S., 8 USPQ2d 1630, 1631 (Comm'r Pats. 1988).

UNITED STATES PATENT AND TRADEMARK OFFICE

UNITED STATES DEPARTMENT OF COMMERCE
United States Patent and Trademark Office
Address: COMMISSIONER FOR PATENTS
P.O. Box 1450
Alexandria, Virginia 22313-1450
www.uspto.gov

HONEYWELL INTERNATIONAL INC.
PATENT SERVICES
101 COLUMBIA ROAD
P O BOX 2245
MORRISTOWN, NJ 07962-2245

Mail Date: 04/21/2010

| | | |
|---|---|---|
| **Applicant** | : Liana M. Kiff | : DECISION ON REQUEST FOR |
| **Patent Number** | : 7652569 | : RECALCULATION of PATENT |
| **Issue Date** | : 01/26/2010 | : TERM ADJUSTMENT IN VIEW |
| **Appliction No** | : 10/956,681 | : OF WYETH AND NOTICE OF INTENT TO |
| **Filed** | : 10/01/2004 | : ISSUE CERTIFICATE OF CORRECTION |
| | | : |

The Request for Recalculation is **GRANTED** to the extent indicated.

The patent term adjustment has been determined to be **597** days. The USPTO will *sua sponte* issue a certificate of correction reflecting the amount of PTA days determined by the recalculation.

Prior to the issuance of the certificate of correction, the USPTO will afford patentee an opportunity to be heard and request reconsideration. Accordingly, patentee has **one month or thirty (30) days**, whichever is longer, to file a request for reconsideration of this patent term adjustment calculation. See 35 U.S.C. 154(b)(3)(B)(ii) and 37 CFR 1.322(a)(4). No extensions of time will be granted under 37 CFR 1.136.

Patentee should use document code PET.OP if electronically filing a request for reconsideration of this patent term adjustment calculation. The patentee must also include the information required by 37 CFR 1.705(b)(2) and the fee required by 37 CFR 1.18(e). If patentee does not file a timely request for reconsideration of this patent term adjustment calculation including the information required by 37 CFR 1.705(b)(2) and the fee required by 37 CFR 1.18(e), the USPTO will issue a certificate of correction reflecting the PTA determination noted above.

Patentee should be aware that in order to preserve the right to review in the United States District Court for the District of Columbia of the USPTO patent term adjustment determination, patentee must ensure that he or she also take the steps required under 35 U.S.C. 154(b)(4)(A) in a timely manner. Nothing in the request for recalculation should be construed as providing an alternative time frame for commencing a civil action under 35 U.S.C. 154(b)(4)(A).

Any questions concerning this decision should be directed to the Office of Patent Legal Administration at 571-272-7702.

UNITED STATES PATENT AND TRADEMARK OFFICE

UNITED STATES DEPARTMENT OF COMMERCE
United States Patent and Trademark Office
Address: COMMISSIONER FOR PATENTS
P.O. Box 1450
Alexandria, Virginia 22313-1450
www.uspto.gov

SCHWEGMAN, LUNDBERG & WOESSNER/SAP
P.O. BOX 2938
MINNEAPOLIS, MN 55402

Mail Date: 04/20/2010

| | | |
|---|---|---|
| **Applicant** | : Ralf Kuersch | : DECISION ON REQUEST FOR |
| **Patent Number** | : 7571164 | : RECALCULATION of PATENT |
| **Issue Date** | : 08/04/2009 | : TERM ADJUSTMENT IN VIEW |
| **Appliction No** | : 10/956,705 | : OF WYETH AND NOTICE OF INTENT TO |
| **Filed** | : 10/01/2004 | : ISSUE CERTIFICATE OF CORRECTION |
| | | : |

The Request for Recalculation is **GRANTED** to the extent indicated.

The patent term adjustment has been determined to be **772** days. The USPTO will *sua sponte* issue a certificate of correction reflecting the amount of PTA days determined by the recalculation.

Prior to the issuance of the certificate of correction, the USPTO will afford patentee an opportunity to be heard and request reconsideration. Accordingly, patentee has **one month or thirty (30) days**, whichever is longer, to file a request for reconsideration of this patent term adjustment calculation. See 35 U.S.C. 154(b)(3)(B)(ii) and 37 CFR 1.322(a)(4). No extensions of time will be granted under 37 CFR 1.136.

Patentee should use document code PET.OP if electronically filing a request for reconsideration of this patent term adjustment calculation. The patentee must also include the information required by 37 CFR 1.705(b)(2) and the fee required by 37 CFR 1.18(e). If patentee does not file a timely request for reconsideration of this patent term adjustment calculation including the information required by 37 CFR 1.705(b)(2) and the fee required by 37 CFR 1.18(e), the USPTO will issue a certificate of correction reflecting the PTA determination noted above.

Patentee should be aware that in order to preserve the right to review in the United States District Court for the District of Columbia of the USPTO patent term adjustment determination, patentee must ensure that he or she also take the steps required under 35 U.S.C. 154(b)(4)(A) in a timely manner. Nothing in the request for recalculation should be construed as providing an alternative time frame for commencing a civil action under 35 U.S.C. 154(b)(4)(A).

Any questions concerning this decision should be directed to the Office of Patent Legal Administration at 571-272-7702.

UNITED STATES PATENT AND TRADEMARK OFFICE

UNITED STATES DEPARTMENT OF COMMERCE
United States Patent and Trademark Office
Address: COMMISSIONER FOR PATENTS
P.O. Box 1450
Alexandria, Virginia 22313-1450
www.uspto.gov

| APPL NO. | FILING OR 371 (c) DATE | ART UNIT | FIL FEE REC'D | ATTY.DOCKET NO | DRAWINGS | TOT CLMS | IND CLMS |
|---|---|---|---|---|---|---|---|
| 10/956,716 | 09/30/2004 | 2122 | 790 | SYMC1062 SIR | 4 | 15 | 3 |

**CONFIRMATION NO. 1683**

**CORRECTED FILING RECEIPT**

*OC000000014866516*

Lisa A. Norris
Gunnison, McKay & Hodgson, L.L.P.
Suite 220
1900 Garden Road
Monterey, CA 93940

Date Mailed: 01/04/2005

Receipt is acknowledged of this regular Patent Application. It will be considered in its order and you will be notified as to the results of the examination. Be sure to provide the U.S. APPLICATION NUMBER, FILING DATE, NAME OF APPLICANT, and TITLE OF INVENTION when inquiring about this application. Fees transmitted by check or draft are subject to collection. Please verify the accuracy of the data presented on this receipt. **If an error is noted on this Filing Receipt, please write to the Office of Initial Patent Examination's Filing Receipt Corrections, facsimile number 703-746-9195. Please provide a copy of this Filing Receipt with the changes noted thereon. If you received a "Notice to File Missing Parts" for this application, please submit any corrections to this Filing Receipt with your reply to the Notice. When the USPTO processes the reply to the Notice, the USPTO will generate another Filing Receipt incorporating the requested corrections (if appropriate).**

**Applicant(s)**

Jonathan Tester, Encinitas, CA;

**Assignment For Published Patent Application**

Symantec Corporation, Cupertino, CA

**Power of Attorney:** The patent practitioners associated with Customer Number **34350**.

**Domestic Priority data as claimed by applicant**

**Foreign Applications**

**If Required, Foreign Filing License Granted:** 11/15/2004

**The country code and number of your priority application, to be used for filing abroad under the Paris Convention, is US10/956,716**

**Projected Publication Date:** 03/30/2006

**Non-Publication Request:** No

**Early Publication Request:** No

**Title**

Method for intercepting specific system calls in a specific application from applications space for security

**Preliminary Class**

717

---

## LICENSE FOR FOREIGN FILING UNDER
## Title 35, United States Code, Section 184
## Title 37, Code of Federal Regulations, 5.11 & 5.15

**GRANTED**

The applicant has been granted a license under 35 U.S.C. 184, if the phrase "IF REQUIRED, FOREIGN FILING LICENSE GRANTED" followed by a date appears on this form. Such licenses are issued in all applications where the conditions for issuance of a license have been met, regardless of whether or not a license may be required as set forth in 37 CFR 5.15. The scope and limitations of this license are set forth in 37 CFR 5.15(a) unless an earlier license has been issued under 37 CFR 5.15(b). The license is subject to revocation upon written notification. The date indicated is the effective date of the license, unless an earlier license of similar scope has been granted under 37 CFR 5.13 or 5.14.

This license is to be retained by the licensee and may be used at any time on or after the effective date thereof unless it is revoked. This license is automatically transferred to any related applications(s) filed under 37 CFR 1.53(d). This license is not retroactive.

The grant of a license does not in any way lessen the responsibility of a licensee for the security of the subject matter as imposed by any Government contract or the provisions of existing laws relating to espionage and the national security or the export of technical data. Licensees should apprise themselves of current regulations especially with respect to certain countries, of other agencies, particularly the Office of Defense Trade Controls, Department of State (with respect to Arms, Munitions and Implements of War (22 CFR 121-128)); the Office of Export Administration, Department of Commerce (15 CFR 370.10 (j)); the Office of Foreign Assets Control, Department of Treasury (31 CFR Parts 500+) and the Department of Energy.

**NOT GRANTED**

No license under 35 U.S.C. 184 has been granted at this time, if the phrase "IF REQUIRED, FOREIGN FILING LICENSE GRANTED" DOES NOT appear on this form. Applicant may still petition for a license under 37 CFR 5.12, if a license is desired before the expiration of 6 months from the filing date of the application. If 6 months has lapsed from the filing date of this application and the licensee has not received any indication of a secrecy order under 35 U.S.C. 181, the licensee may foreign file the application pursuant to 37 CFR 5.15(b).

UNITED STATES PATENT AND TRADEMARK OFFICE

Commissioner for Patents
United States Patent and Trademark Office
P.O. Box 1450
Alexandria, VA 22313-1450
www.uspto.gov

**KOLISCH HARTWELL, P.C.**
**200 PACIFIC BUILDING**
**520 SW YAMHILL STREET**
**PORTLAND OR 97204**

**COPY MAILED**

AUG 0 3 2007

**OFFICE OF PETITIONS**

| | | |
|---|---|---|
| In re Application of | : | |
| Dent et al. | : | |
| Application No. 10/956,739 | : | ON PETITION |
| Filed: October 1, 2004 | : | |
| Attorney Docket No. FSI 316 | : | |

This is a decision on the petition under 37 C.F.R. § 1.137(b), filed July 11, 2007, to revive the above-identified application.

The petition is **GRANTED.**

The petition satisfies the conditions for revival pursuant to the provisions of 37 CFR 1.137(b) in that (1) the reply in the form of the Issue Fee Transmittal with payment of the issue and publication fees; (2) the petition fee; and (3) the required statement of unintentional delay have been received. Accordingly, the response has been accepted as having been unintentionally delayed.

This matter is being referred to the Publishing Division for processing into a patent.

Telephone inquiries regarding this decision should be directed to the undersigned at (571) 272-3206.

Liana Walsh
Petitions Examiner
Office of Petitions

UNITED STATES PATENT AND TRADEMARK OFFICE

Commissioner for Patents
United States Patent and Trademark Office
P.O. Box 1450
Alexandria, VA 22313-1450
www.uspto.gov

MAILED

MAY 14 2010

OFFICE OF PETITIONS

FISH & RICHARDSON P.C.
P.O. Box 1022
MINNEAPOLIS, MN 55440-1022

| | | |
|---|---|---|
| In re Patent of Eric A. Menninga | : | DECISION ON REQUEST |
| Patent No. 7,594,171 | : | FOR RECONSIDERATION OF |
| Issue Date: September 22, 2009 | : | PATENT TERM ADJUSTMENT |
| Application No. 10/956,744 | : | AND NOTICE OF INTENT TO |
| Filing Date: October 1, 2004 | : | ISSUE CERTIFICATE OF |
| Attorney Docket No. 07844-0671001/P625 | : | CORRECTION |

This is a decision on the petition filed November 17, 2009, which is being treated as a petition under 37 C.F.R. § 1.705(d) requesting the patent term adjustment indicated on the patent be corrected to indicate the term of the patent is extended or adjusted by one thousand forty (1040) days.

The petition to correct the patent term adjustment indicated on the above-identified patent to indicate that the term of the above-identified patent is extended or adjusted by one thousand forty (1040) days is **GRANTED to the extent indicated herein**.

The Office will *sua sponte* issue a certificate of correction. Pursuant to 37 C.F.R. § 1.322, the Office will not issue a certificate of correction without first providing assignee or patentee an opportunity to be heard. Accordingly, Patentee is given **one (1) month or thirty (30) days**, whichever is longer, from the mail date of this decision to respond. No extensions of time will be granted under 37 C.F.R. § 1.136.

Patentee asserts the period of delay under 35 U.S.C. § 154(b)(1)(B) ("B Delay") is 505 days.

The period from the filing date of the request for continued examination (RCE) to the issue date of the patent is not included in the period of B Delay. *See* 35 U.S.C. § 154(b)(1)(B)(i). Therefore, the over three year period began on October 22, 2007, and ended on February 16, 2009, *the day before* the RCE was filed, and is 504 days, not 505 days.

Patentee asserts, and the Office agrees, the number of days of overlap between the period of delay under 35 U.S.C. § 154(b)(1)(A) ("A Delay") and B Delay is 169 days.

Patentee asserts a reduction of 103 days should have been entered as a result of the filing of an information disclosure statement ("IDS") on September 24, 2008, after the filing of a reply to an Office action on June 13, 2008.

The record fails to indicate the IDS was expressly requested by the examiner and the IDS was not accompanied by a statement under 37 C.F.R. § 1.704(d). Therefore, the Office agrees a 103-day reduction is appropriate for the IDS.

The patent term adjustment is 1039 days which is the sum of 838 days of A Delay and 504 days of B Delay reduced by 169 days of overlap and 134 (31 + 103) days of Applicant delay.

The Office acknowledges submission of the $200.00 fee set forth in 37 C.F.R. § 1.18(e). No additional fees are required.

The application is being forwarded to the Certificates of Correction Branch for issuance of a certificate of correction. The Office will issue a certificate of correction indicating that the term of the patent is extended or adjusted by **one thousand thirty-nine (1039)** days.

Telephone inquiries specific to this decision should be directed to Senior Petitions Attorney Steven Brantley at (571) 272-3203.

Charles Steven Brantley
Senior Petitions Attorney
Office of Petitions

Enclosure: Copy of DRAFT Certificate of Correction

**UNITED STATES PATENT AND TRADEMARK OFFICE**

# CERTIFICATE OF CORRECTION

| | | |
|---|---|---|
| PATENT NO. | : | 7,594,171 B2 |
| ISSUE DATE | : | September 22, 2009 |
| INVENTOR(S) | : | Menninga |

**DRAFT**

It is certified that error appears in the above-identified patent and that said Letters Patent is hereby corrected as shown below:

On the cover page,

[*] Notice: Subject to any disclaimer, the term of this patent is extended or adjusted under 35 U.S.C. 154(b) by 807 days.

Delete the phrase "by 807 days" and insert - by 1039 days--

UNITED STATES PATENT AND TRADEMARK OFFICE

UNITED STATES DEPARTMENT OF COMMERCE
United States Patent and Trademark Office
Address: COMMISSIONER FOR PATENTS
P.O. Box 1450
Alexandria, Virginia 22313-1450
www.uspto.gov

MARTINE PENILLA & GENCARELLA, LLP
710 LAKEWAY DRIVE
SUITE 200
SUNNYVALE, CA 94085

Mail Date: 05/17/2010

| | | |
|---|---|---|
| **Applicant** | : Hugh Sungki O | : DECISION ON REQUEST FOR |
| **Patent Number** | : 7671416 | : RECALCULATION of PATENT |
| **Issue Date** | : 03/02/2010 | : TERM ADJUSTMENT IN VIEW |
| **Application No** | : 10/956,758 | : OF WYETH |
| **Filed** | : 09/30/2004 | : |
| | | : |

The Patentee's Request for Recalculation is **DISMISSED.**

This Request is deemed ineligible for consideration for one or more of the following reasons:

(A). The patent for which PTA recalculation is requested is either a design or reissue application or is a reexamination proceeding;

(B). The patent for which PTA recalculation is requested resulted from a utility or plant application filed under 35 USC 111(a) before May 29, 2000 and no CPA filed in the application on/after May 29, 2000;

(C). The patent for which PTA recalculation is requested resulted from an international application in which the international filing date was before May 29, 2000 and no CPA filed in the application on/after May 29, 2000;

(D). The patent for which PTA recalculation is requested issued on/after March 2, 2010;

(E). The Request for Recalculation was filed more than 180 days after the grant date of the patent and the request was not filed within two months of a dismissal of a request for reconsideration of the of the patent term under 37 CFR 1.705(d);

(F). The Request for Recalculation is not solely limited to USPTO pre-Wyeth interpretation of 35 U.S.C. 154(b)(2)(A);

or

(G). A civil action was filed pursuant to 35 U.S.C. 154(b)(4)(A)concerning the same patent at issue in this request.

Patentee may file a reply to this decision dismissing the Request for Recalculation. Patentee must file such reply within one month or thirty days, whichever is longer, of the mail date of the decision dismissing the Request for Recalculation. No fee is required if patentee is asserting in the reply that the dismissal for ineligibility is improper.

Patentee should use document code PET.OP if electronically filing a reply to this dismissal. If the USPTO finds that the request was improperly deemed ineligible, the USPTO will mail applicant a recalculation determination.

Patentee should be aware that in order to preserve the right to review in the United States District Court for the District of Columbia of the USPTO patent term adjustment determination, patentee must ensure that he or she also take the steps required under 35 U.S.C. 154(b)(4)(A). Nothing in the request for recalculation should be construed as providing an alternative time frame for commencing a civil action under 35 U.S.C. 154 (b)(4)(A).

Any questions concerning this decision should be directed to the Office of Patent Legal Administration at 571-272-7702.

UNITED STATES PATENT AND TRADEMARK OFFICE

UNITED STATES DEPARTMENT OF COMMERCE
United States Patent and Trademark Office
Address: COMMISSIONER FOR PATENTS
P.O. Box 1450
Alexandria, Virginia 22313-1450
www.uspto.gov

K&L Gates LLP
P.O. Box 1135
CHICAGO, IL 60690

Mail Date: 04/20/2010

| | | |
|---|---|---|
| **Applicant** | : Paulina Rodgers | : DECISION ON REQUEST FOR |
| **Patent Number** | : 7666089 | : RECALCULATION of PATENT |
| **Issue Date** | : 02/23/2010 | : TERM ADJUSTMENT IN VIEW |
| **Appliction No** | : 10/956,768 | : OF WYETH AND NOTICE OF INTENT TO |
| **Filed** | : 09/30/2004 | : ISSUE CERTIFICATE OF CORRECTION |
| | | : |

The Request for Recalculation is **GRANTED** to the extent indicated.

The patent term adjustment has been determined to be **738** days. The USPTO will *sua sponte* issue a certificate of correction reflecting the amount of PTA days determined by the recalculation.

Prior to the issuance of the certificate of correction, the USPTO will afford patentee an opportunity to be heard and request reconsideration. Accordingly, patentee has **one month or thirty (30) days**, whichever is longer, to file a request for reconsideration of this patent term adjustment calculation. See 35 U.S.C. 154(b)(3)(B)(ii) and 37 CFR 1.322(a)(4). No extensions of time will be granted under 37 CFR 1.136.

Patentee should use document code PET.OP if electronically filing a request for reconsideration of this patent term adjustment calculation. The patentee must also include the information required by 37 CFR 1.705(b)(2) and the fee required by 37 CFR 1.18(e). If patentee does not file a timely request for reconsideration of this patent term adjustment calculation including the information required by 37 CFR 1.705(b)(2) and the fee required by 37 CFR 1.18(e), the USPTO will issue a certificate of correction reflecting the PTA determination noted above.

Patentee should be aware that in order to preserve the right to review in the United States District Court for the District of Columbia of the USPTO patent term adjustment determination, patentee must ensure that he or she also take the steps required under 35 U.S.C. 154(b)(4)(A) in a timely manner. Nothing in the request for recalculation should be construed as providing an alternative time frame for commencing a civil action under 35 U.S.C. 154(b)(4)(A).

Any questions concerning this decision should be directed to the Office of Patent Legal Administration at 571-272-7702.

## SPE RESPONSE FOR CERTIFICATE OF CORRECTION

**Paper No.:** _____

**DATE** : 06-24-09

**TO SPE OF** : ART UNIT 3616

**SUBJECT** : Request for Certificate of Correction for Appl. No.: 10/956770 Patent No.: 74445220

Please respond to this request for a certificate of correction within 7 days.

**FOR IFW FILES:**

Please review the requested changes/corrections as shown in the **COCIN** document(s) in the IFW application image. No new matter should be introduced, nor should the scope or meaning of the claims be changed.

Please complete the response (see below) and forward the completed response to scanning using document code **COCX**.

**FOR PAPER FILES:**

Please review the requested changes/corrections as shown in the attached certificate of correction. Please complete this form (see below) and forward it with the file to:

**Certificates of Correction Branch (CofC)**
**South Tower - 9A22**
**Palm Location 7580**

**Angela Green**
**Certificates of Correction Branch**
**703-756-1541**

**Thank You For Your Assistance**

**The request for issuing the above-identified correction(s) is hereby:**
Note your decision on the appropriate box.

- ☐ **Approved** — **All** changes apply.
- ☒ **Approved in Part** — Specify below which changes **do not** apply.
- ☐ **Denied** — State the reasons for denial below.

**Comments:**

The proposed change to column 16 is incorrect as the wrong line is indicated. The correct line to be changed is line 51.

/Paul N. Dickson/ — **SPE**

3616 — **Art Unit**

UNITED STATES PATENT AND TRADEMARK OFFICE

COMMISSIONER FOR PATENTS
UNITED STATES PATENT AND TRADEMARK OFFICE
P.O. BOX 1450
ALEXANDRIA, VA 22313-1450
www.uspto.gov

MAIL

APR 2 5 2005

DIRECTOR OFFICE
TECHNOLOGY CENTER 2600

BLAKELY SOKOLOFF TAYLOR & ZAFMAN
12400 WILSHIRE BOULEVARD
SEVENTH FLOOR
LOS ANGELES CA 90025-1030

In re Application of :
JACOB, KARL, et al. :
Application No. 10/956,771 :
Filed: October 1, 2004 :
For: **METHOD AND SYSTEM TO CONNECT CONSUMERS TO INFORMATION** :

DECISION ON PETITION TO MAKE SPECIAL

This is a decision on the petition filed February 22, 2005 under Manual of Patent Examination Procedure §708.02, VIII requesting accelerated examination.

The petition under Manual of Patent Examination Procedure §708.02, VIII, must:
(1) be filed prior to receiving any examination by the examiner,
(2) be accompanied by the required fee- $130,
(3) the claims should be directed to a single invention (if it is determined that the claims pertain to more than one invention, then applicant will have to make an election without traverse or forfeit accelerated examination status),
(4) state that a pre-examination search was made, and fully discuss the search method employed, such as classes and subclasses searched, publications, Chemical abstracts, patents, etc. A search made by a foreign patent office satisfies this requirement,
(5) be accompanied by a copy of each of the references most closely related to the subject matter encompassed by the claims if said references are not already of record,
(6) fully discuss the references, pointing out with the particularity required by 37 C.F.R. §1.111 (b) and (c), how the claimed subject matter is patentable over the references.

The petitioner meets all the above-listed requirements. Accordingly, the petition is **GRANTED**.

The application will retain its special status throughout its entire prosecution, including any appeal to the Board of Patent Appeals and Interferences, subject only to diligent prosecution by the applicant. The application file is being forwarded to the examiner for appropriate action in due course.

Kenneth A. Wieder
Special Program Examiner
Technology Center 2600
Communications

UNITED STATES PATENT AND TRADEMARK OFFICE

Commissioner for Patents
United States Patent and Trademark Office
P.O. Box 1450
Alexandria, VA 22313-1450
www.uspto.gov

**DANIEL L. DAWES**
**MYERS DAVES ANDRAS & SHERMAN, LLP**
**SUITE 1150, 19900 MACARTHUR BOULEVARD**
**IRVINE, CA 92612**

**COPY MAILED**

SEP 2 6 2008

**OFFICE OF PETITIONS**

| | | |
|---|---|---|
| In re Application of | : | |
| Konstantinos P. GIAPIS, et al | : | |
| Application No. 10/956,811 | : | DECISION ON PETITION |
| Filed: October 1, 2004 | : | TO WITHDRAW |
| Attorney Docket No. CIT1.PAU.52 | | FROM RECORD |
| | : | |

This is a decision on the Request to Withdraw as attorney or agent of record under 37 C.F.R. § 1.36(b), filed September 2, 2008.

The request is **NOT APPROVED**.

A grantable request to withdraw as attorney/agent of record must be signed by every attorney/agent seeking to withdraw or contain a clear indication that one attorney is signing on behalf of another/others. The Office requires the practitioner(s) requesting withdrawal to certify that he, she, or they have: (1) given reasonable notice to the client, prior to the expiration of the response period, that the practitioner(s) intends to withdraw from employment; (2) delivered to the client or a duly authorized representative of the client all papers and property (including funds) to which the client is entitled; and (3) notified the client of any responses that may be due and the time frame within which the client must respond, pursuant 37 CFR 10.40(c).

The request cannot be approved because the attorneys of record were not appointed by customer number.

All future communications from the Office will continue to be directed to the above-listed address until otherwise notified by applicant.

Telephone inquiries concerning this decision should be directed to the undersigned at 571-272-6735.

Diane Goodwyn
Petitions Examiner
Office of Petitions

UNITED STATES PATENT AND TRADEMARK OFFICE

Commissioner for Patents
United States Patent and Trademark Office
P.O. Box 1450
Alexandria, VA 22313-1450
www.uspto.gov

TERADYNE, INC
321 HARRISON AVE
BOSTON MA 02118

**COPY MAILED**

AUG 19 2005

**OFFICE OF PETITIONS**

In re Application of
Roderick WARNER
Application No. 10/956,816
Filed: October 1, 2004
Attorney Docket No. 1899-US

DECISION ON PETITION
UNDER 37 CFR 1.137(b)

This is a decision on the petition under 37 CFR 1.137(b), filed August 4, 2005, to revive the above-identified application.

The petition is **GRANTED**.

The application became abandoned for failure to reply in a timely manner to the Notice to File Missing Parts of Nonprovisional Application (Notice) mailed December 8, 2004 and the Notice of Incomplete Reply (Nonprovisional) mailed January 12, 2005. The Notice sets a period for reply of two (2) months from the mail date of the Notice. No extensions of time under the provisions of 37 CFR 1.136(a) were obtained. Accordingly, the application became abandoned on February 9, 2005.

The petition satisfies the conditions for revival pursuant to the provisions of 37 CFR 1.137(b) in that (1) the reply in the form of replacement drawings as set forth in the Notice; (2) the petition fee of $1,500; and (3) the required statement of unintentional delay have been received. Accordingly, the response to the Notice of Incomplete Reply is accepted as having been unintentionally delayed.

Telephone inquiries concerning this decision should be directed to Amelia Au at (571) 272-7414.

The application file is being referred to the Office of Initial Patent Examination.

Brian Hearn for

Frances Hicks
Lead Petitions Examiner
Office of Petitions

UNITED STATES PATENT AND TRADEMARK OFFICE

Commissioner for Patents
United States Patent and Trademark Office
P.O. Box 1450
Alexandria, VA 22313-1450
www.uspto.gov

COOLEY GODWARD KRONISH LLP
ATTN: PATENT GROUP
THE BOWEN BUILDING
875 15TH STREET, N.W. SUITE 800
WASHINGTON DC 20005-2221

COPY MAILED
DEC 21 2006
OFFICE OF PETITIONS

| | | |
|---|---|---|
| In re Application of | : | |
| Boney et al. | : | |
| Application No. 10/956,818 | : | DECISION ON PETITION |
| Filed: October 1, 2004 | : | TO MAKE SPECIAL UNDER |
| Attorney Docket No. WEBR-006/00US | : | 37 CFR 1.102(c)(2) |
| | : | |

This is a decision on the petition under 37 CFR 1.102(c)(2)(iii), filed August 24, 2006, to make the above-identified application special based on the invention materially contributing to countering terrorism as set forth in M.P.E.P. § 708.02, Section XI.

The petition is **DISMISSED**.

A grantable petition to make an application special under 37 CFR 1.102(c)(2)(iii) and MPEP § 708.02, Section XI: Inventions for Countering Terrorism, should state that special status is sought because the invention materially contributes to countering terrorism. International terrorism as defined in 18 U.S.C. 2331 includes:

> activities that - (A) involve violent acts or acts dangerous to human life that are a violation of the criminal laws of the United States or of any State, or that would be a criminal violation if committed within the jurisdiction of the United States or of any State; [and] (B) appear to be intended - (i) to intimidate or coerce a civilian population; (ii) to influence the policy of a government by intimidation or coercion; or (iii) to affect the conduct of a government by assassination or kidnapping...

If the disclosure it not clear on its face that the claimed invention is materially directed to countering terrorism, the petition must be accompanied by a statement by the applicant, assignee or a registered attorney/agent explaining how the materiality standard is met. The types of technology for countering terrorism could include, but are not limited to, systems for detecting/identifying explosives, aircraft sensors/security systems, and vehicular barricades/disabling systems. No fee is required.

The USPTO's final rule amending 37 CFR 1.102(c)(2) states:

> The materially standard does not permit an applicant to speculate as to how a hypothetical end-user might specially apply the invention in a manner that could counter terrorism. Nor does such standard permit an applicant to enjoy the benefit of advance examination merely because some minor aspect of the claimed invention may be directed to countering terrorism...[Response to Comment 65] applicants should not expect to have their petitions granted without a clear demonstration that the claimed invention is materially related to countering terrorism. 69 Fed. Reg. 56511 (Sept. 21, 2004)

The instant invention is directed to a system and method for locating malware and generating malware definitions. That the instant invention could provide systems and methods potentially useable in gathering information about a person or organization or that the instant invention has been implemented in one or more agencies of United States government, as alleged in the instant petition, does not in itself meet the materiality standard since the materially standard does not permit an applicant to speculate as to how a hypothetical end-user might specially apply the invention in a manner that could counter terrorism. Additionally, further steps would be required to actually offset or nullify terrorism. As a result, no advancement in the technology of countering terrorism has been persuasively shown.

Further correspondence with respect to this matter should be addressed as follows:

By Mail: Mail Stop PETITION
Commissioner for Patents
P. O. Box 1450
Alexandria, VA 22313-1450

By hand: U. S. Patent and Trademark Office
Customer Service Window, Mail Stop Petitions
Randolph Building
401 Dulany Street
Alexandria, VA 22314

By FAX: (571) 273-8300

Telephone inquiries concerning this decision should be directed to Ramesh Krishnamurthy at 571-272-4914, or to the undersigned at 571-272-7099.

All other inquiries concerning either the examination or status of the application should be directed to the Technology Center.

The application is being forwarded to the Technology Center Art Unit 2131 for action in its regular turn.

David Bucci
Petitions Examiner
Office of Petitions

UNITED STATES PATENT AND TRADEMARK OFFICE

Commissioner for Patents
United States Patent and Trademark Office
P.O. Box 1450
Alexandria, VA 22313-1450
www.uspto.gov

**COPY MAILED**

MAY 1 2 2008

**OFFICE OF PETITIONS**

**PATREA L. PABST**
**PABST PATENT GROUP LLP**
**400 COLONY SQUARE, SUITE 1200**
**1201 PEACHTREE STREET**
**ATLANTA GA 30361**

In re Application of

**VORNDRAN,** Charles et al.
Application No. 10/956,819
Filed: October 01, 2004
Attorney Docket No. **CP 113**

DECISION ON PETITION
TO WITHDRAW
FROM RECORD

This is a decision on the Request to Withdraw as attorney or agent of record under 37 C.F.R. § 1.36(b), filed April 16, 2008.

The request is **APPROVED**.

A grantable request to withdraw as attorney/agent of record must be signed by every attorney/agent seeking to withdraw or contain a clear indication that one attorney is signing on behalf of another/others. A request to withdraw will not be approved unless at least 30 (thirty) days would remain between the date of approval and the later of the expiration date of a time to file a response or the expiration date of the maximum time period which can be extended under 37 C.F.R. § 1.136(a).

The request was signed by Charles Vorndran on behalf of all attorneys of record who are associated with customer No. 23579. All attorneys/agents associated with the Customer Number 23579 have been withdrawn. Applicant is reminded that there is no attorney of record at this time.

The request to change the correspondence of record is not acceptable as the requested correspondence address is not that of: (1) the first named signing inventor; or (2) an intervening assignee of the entire interest under 37 C.F.R 3.71. All future communications from the Office will be directed to the first named signing inventor at the first copied address below until otherwise properly notified by the applicant.

Telephone inquiries concerning this decision should be directed to Tredelle Jackson at 571-272-2783.

Tredelle D. Jackson
Petitions Examiner
Office of Petitions

cc: **JANE HIRSH**
**15 PEIRCE STREET**
**WELLESLEY, MA 02581**

cc: **DONNA M. GORDON, PH.D**
**FOLEY HOAG LLP**
**155 SEAPORT BOULEVARD**
**BOSTON, MA 02110**

UNITED STATES PATENT AND TRADEMARK OFFICE

Commissioner for Patents
United States Patent and Trademark Office
P.O. Box 1450
Alexandria, VA 22313-1450
www.uspto.gov

**FISH & RICHARDSON, PC**
**P.O. BOX 1022**
**MINNEAPOLIS MN 55440-1022**

COPY MAILED

MAR 0 2 2007

OFFICE OF PETITIONS

| | | |
|---|---|---|
| In re Application of | : | |
| Narayanan et al. | : | |
| Application No. 10/956,835 | : | ON PETITION |
| Filed: October 1, 2004 | : | |
| Attorney Docket No. 06618-948001/CIT-3958 | : | |

This is a decision on the petition under 37 C.F.R. § 1.137(b), filed January 22, 2007, to revive the above-identified application.

The petition is **GRANTED.**

The petition satisfies the conditions for revival pursuant to the provisions of 37 CFR 1.137(b) in that (1) the reply in the form of an Election; (2) the petition fee; and (3) the required statement of unintentional delay have been received. Accordingly, the response has been accepted as having been unintentionally delayed.

This matter is being referred to Technology Center 1700 for further examination on the merits.

Telephone inquiries regarding this decision should be directed to the undersigned at (571) 272-3206.

Liana Walsh
Petitions Examiner
Office of Petitions

## SPE RESPONSE FOR CERTIFICATE OF CORRECTION

**DATE** : 3/6/08

**Paper No.:** —

**TO SPE OF** : ART UNIT 2839

**SUBJECT** : Request for Certificate of Correction for Appl. No.: 10/256838 Patent No: 7189109 B2

A response is requested with respect to a request for a certificate of correction.

With respect to the change(s) requested to correct Office and/or Applicant's errors, should the patent read as shown in the certificate of correction attached herewith or the COCIN document(s), in IFW images for the above-identified patented application? No new matter should be introduced, nor should the scope or meaning of the claims be changed.

If the response is for an IFW, within 7 days, please complete and forward the response, to the employee (named below) via scanning into application images, using document code **COCX**.

If the response is for a paper file wrapper, please complete the response and forward the response with the paper file wrapper, to the employee (named below), within 7 days, to:

**Certificates of Correction Branch (CofC)**
**South Tower - 9A22**
**Palm Location 7580**

*VIRGINIA TOLBERT*
**Certificates of Correction Branch**
**703-308-9390 ext. 113**

**Thank You For Your Assistance**

**The request for issuing the above-identified correction(s) is hereby:**
Note your decision on the appropriate box.

- ☒ **Approved** — All changes apply.
- ☐ **Approved In Part** — Specify below which changes **do not** apply.
- ☐ **Denied** — State the reasons for denial below.

**Comments:** Requested change is acceptable.

4/30/08

T Patel
**SPE**

2839
**Art Unit**

UNITED STATES PATENT AND TRADEMARK OFFICE

Commissioner for Patents
United States Patent and Trademark Office
P.O. Box 1450
Alexandria, VA 22313-1450
www.uspto.gov

**HODGSON RUSS LLP**
**THE GUARANTY BUILDING**
**140 PEARL STREET**
**SUITE 100**
**BUFFALO NY 14202-4040**

COPY MAILED
DEC 07 2007
OFFICE OF PETITIONS

| | | |
|---|---|---|
| In re Application of | : | |
| Bae et al. | : | |
| Application No. 10/956,839 | : | DECISION ON PETITION |
| Filed: October 1, 2004 | : | |
| Attorney Docket No. 038423.00050 | : | |

This is a decision on the petition under the unintentional provisions of 37 CFR 1.137(b), filed November 9, 2007, to revive the above-identified application.

The petition is **GRANTED**.

The petition satisfies the requirements of 37 CFR 1.137(b) in that petitioner has supplied (1) the reply in the form of the Issue Fee Transmittal with payment of the issue and publication fees, (2) the petition fee, and (3) a proper statement of unintentional delay.

Telephone inquiries concerning this decision should be directed to the undersigned at (571) 272-3206.

This matter is being referred to the Publishing Division for processing into a patent.

Liana Walsh
Petitions Examiner
Office of Petitions

UNITED STATES PATENT AND TRADEMARK OFFICE

Commissioner for Patents
United States Patent and Trademark Office
P.O. Box 1450
Alexandria, VA 22313-1450
www.uspto.gov

COPY MAILED

AUG 0 1 2006

OFFICE OF PETITIONS

Stephen M. Patton
7881 Grove Court East
Germantown, TN 38138

| | | |
|---|---|---|
| In re Application of | : | |
| Edward H. Priepke | : | |
| Application No. 10/956,875 | : | DECISION ON PETITION |
| Filed: October 2, 2004 | : | TO WITHDRAW |
| Attorney Docket No. 17666 | : | FROM RECORD |
| | : | |

This is a decision on the Request to Withdraw as attorney or agent of record under 37 C.F.R. § 1.36(b), filed January 12, 2006.

The request is **NOT APPROVED**.

A grantable request to withdraw as attorney/agent of record must be signed by every attorney/agent seeking to withdraw or contain a clear indication that one attorney is signing on behalf of another/others. A request to withdraw will not be approved unless at least 30 (thirty) days would remain between the date of approval and the later of the expiration date of a time to file a response or the expiration date of the maximum time period which can be extended under 37 C.F.R. § 1.136(a).

The Office cannot approve the request at this time since the reasons provided do not meet any of the conditions under the mandatory or permissive categories enumerated in 37 CFR 10.40. Section 10.40 of Title 37 of the Code of Federal Regulation states, "[a] practitioner shall not withdraw from employment in a proceeding before the Office without permission from the Office[.]" More specifically, 37 CFR 10.40 states, "[i]f paragraph (b) of this section is not applicable, a practitioner may not request permission to withdraw in matter pending before the Office unless such request or such withdrawal is" for one the permissive reasons listed in 37 CFR 10.40(c). The reasons set forth in the request, **I no longer legally represent the assignee**, do not meet any the conditions set forth in 37 CFR 10.40.

All future communications from the Office will continue to be directed to the above-listed address until otherwise notified by applicant.

Telephone inquiries concerning this decision should be directed to Terri Williams at 571-272-2991.

David Bucci
Petitions Examiner
Office of Petitions

UNITED STATES PATENT AND TRADEMARK OFFICE

Commissioner for Patents
United States Patent and Trademark Office
P.O. Box 1450
Alexandria, VA 22313-1450
www.uspto.gov
DIW Jan-08

ROBERT RYAN MORISHITA
MORISHITA LAW FIRM, LLC
3800 HOWARD HUGHES PKWY,
SUITE 850
LAS VEGAS NV 89169

**COPY MAILED**

JAN 17 2008

**OFFICE OF PETITIONS**

| | | |
|---|---|---|
| In re Application of | : | |
| Mark D. Baxter | : | |
| Application Number: 10/956879 | : | ON PETITION |
| Filing Date: 10/01/2004 | : | |
| Attorney Docket Number: | : | |
| BAXTER04-01 | : | |

This is a decision in reference to the petition to withdraw the holding of abandonment filed on December 6, 2007.

The petition is **DISMISSED**.

This application became abandoned on February 11, 2005, for failure to submit a timely and proper response to the Notice to File Missing Parts of Nonprovisional Application mailed on December 10, 2004, which set a two (2) month shortened period for reply. Notice of Abandonment was mailed on August 24, 2007.

Petitioner asserts that a proper and timely response to the Notice was filed.

A review of the record reveals the following:

1. On October 1, 2004, the application was filed.

2. On November 19, 2004, a Notice to File Missing Parts of Nonprovisional Application was mailed, stating that additional claim fees of $44.00 for one independent claim(s) over 3 were required. A two (2) month period for reply was set.

3. On December 10, 2004, a reply to the Notice mailed on November 19, 2004, was filed, including a check for $1.00.

4. On January 31, 2005, a Notice of Incomplete Reply (Nonprovisional) was mailed, stating that the reply filed on December 10, 2004, was incomplete. The Notice and Attachment indicated that $74.00 in additional claim fee(s) were required. The Notice stated that the time period set forth in the Notice mailed on November 19, 2004, continues to run.

5. On February 23, 2005, a response to the Notice of Incomplete Reply was filed, along with a check for $129.00 intended to cover the additional claim fee(s) and a one (1) month extension of time.

6. On August 24, 2007, a Notice of Abandonment was mailed, stating that the reply received on January 31, 2005, was untimely.

Upon review, it is noted that the paper filed on February 23, 2005, stated that a one (1) month extension of time fee of $55.00 was being submitted therewith. The fee for a one (1) month extension of time (small entity) on February 23, 2005, however, was $60.00.[1] Accordingly the fee for a one (1) month extension of time was not timely paid, and the application became abandoned,

37 CFR 1.22 states that patent fees and charges payable to the United States Patent and Trademark Office are required to be paid in advance; that is, at the time of requesting any action by the Office for which a fee or charge is payable. As the proper amount of the fee was not paid at the time payment was made, the extension of time fee was not timely paid.

While unfortunate, the failure to file the proper amount for an Office fee is an avoidable mistake. Withdrawal of the holding of abandonment is not warranted when petitioner makes an avoidable mistake.

As the showing of record is that a complete and timely response was not filed, the application is abandoned.

Petitioner may wish to consider filing a petition to revive the application, accompanied by the proper fee. A copy of the form for filing a petition to revive under 37 CFR 1.137(b) is enclosed.

---

[1] See Changes to Patent Fees Under the Consolidated Appropriations Act, 2005, 69 Fed. Reg. 70660 (December 7, 2004).

Any request for reconsideration must be filed within **TWO MONTHS** of the date of this decision. **This period may not be extended.**[2]

Further correspondence with respect to this matter should be addressed as follows:

By mail: Mail Stop Petitions
Commissioner for Patents
P.O. Box 1450
Alexandria, VA 22313-1450

By FAX: (571) 273-8300
Attn: Office of Petitions

By hand: Customer Service Window
Mail Stop Petitions
Randolph Building
401 Dulany Street
Alexandria, VA 22314

Telephone inquiries concerning this matter may be directed to the undersigned at (571) 272-3231.

D Wood

Douglas I. Wood
Senior Petitions Attorney
Office of Petitions

Encl: PTO/SB/64

[2] 37 CFR 1.181(f).

PTO/SB/64 (01-08)
Approved for use through 01/31/2008. OMB 0651-0031
U.S. Patent and Trademark Office; U.S. DEPARTMENT OF COMMERCE
Under the Paperwork Reduction Act of 1995, no persons are required to respond to a collection of information unless it displays a valid OMB control number.

# PETITION FOR REVIVAL OF AN APPLICATION FOR PATENT ABANDONED UNINTENTIONALLY UNDER 37 CFR 1.137(b)

Docket Number (Optional)

First named inventor:

Application No.: Art Unit:

Filed: Examiner:

Title:

Attention: Office of Petitions
**Mail Stop Petition**
Commissioner for Patents
P.O. Box 1450
Alexandria, VA 22313-1450
FAX (571) 273-8300

NOTE: If information or assistance is needed in completing this form, please contact Petitions Information at (571) 272-3282.

The above-identified application became abandoned for failure to file a timely and proper reply to a notice or action by the United States Patent and Trademark Office. The date of abandonment is the day after the expiration date of the period set for reply in the office notice or action plus an extensions of time actually obtained.

APPLICANT HEREBY PETITIONS FOR REVIVAL OF THIS APPLICATION

NOTE: A grantable petition requires the following items:
(1) Petition fee;
(2) Reply and/or issue fee;
(3) Terminal disclaimer with disclaimer fee - required for all utility and plant applications filed before June 8, 1995; and for all design applications; and
(4) Statement that the entire delay was unintentional.

1. Petition fee

☐ Small entity-fee $ _____ (37 CFR 1.17(m)). Applicant claims small entity status. See 37 CFR 1.27.

☐ Other than small entity – fee $ _____ (37 CFR 1.17(m))

2. Reply and/or fee

A. The reply and/or fee to the above-noted Office action in the form of _____(identify type of reply):

☐ has been filed previously on _____.
☐ is enclosed herewith.

B. The issue fee and publication fee (if applicable) of $ _____.

☐ has been paid previously on _____.
☐ is enclosed herewith.



This collection of information is required by 37 CFR 1.137(b). The information is required to obtain or retain a benefit by the public which is to file (and by the USPTO to process) an application. Confidentiality is governed by 35 U.S.C. 122 and 37 CFR 1.11 and 1.14. This collection is estimated to take 1.0 hour to complete, including gathering, preparing, and submitting the completed application form to the USPTO. Time will vary depending upon the individual case. Any comments on the amount of time you require to complete this form and/or suggestions for reducing this burden, should be sent to the Chief Information Officer, U.S. Patent and Trademark Office, U.S. Department of Commerce, P.O. Box 1450, Alexandria, VA 22313-1450. DO NOT SEND FEES OR COMPLETED FORMS TO THIS ADDRESS. **SEND TO: Mail Stop Petition, Commissioner for Patents, P.O. Box 1450, Alexandria, VA 22313-1450.**

*If you need assistance in completing the form, call 1-800-PTO-9199 and select option 2.*

Under the Paperwork Reduction Act of 1995, no persons are required to respond to a collection of information unless it displays a valid OMB control number.

3. Terminal disclaimer with disclaimer fee

☐ Since this utility/plant application was filed on or after June 8, 1995, no terminal disclaimer is required.

☐ A terminal disclaimer (and disclaimer fee (37 CFR 1.20(d)) of $ _____ for a small entity or $ _____ for other than a small entity) disclaiming the required period of time is enclosed herewith (see PTO/SB/63).

4. STATEMENT: The entire delay in filing the required reply from the due date for the required reply until the filing of a grantable petition under 37 CFR 1.137(b) was unintentional. [NOTE: The United States Patent and Trademark Office may require additional information if there is a question as to whether either the abandonment or the delay in filing a petition under 37 CFR 1.137(b) was unintentional (MPEP 711.03(c), subsections (III)(C) and (D)).]

## WARNING:

Petitioner/applicant is cautioned to avoid submitting personal information in documents filed in a patent application that may contribute to identity theft. Personal information such as social security numbers, bank account numbers, or credit card numbers (other than a check or credit card authorization form PTO-2038 submitted for payment purposes) is never required by the USPTO to support a petition or an application. If this type of personal information is included in documents submitted to the USPTO, petitioners/applicants should consider redacting such personal information from the documents before submitting them to the USPTO. Petitioner/applicant is advised that the record of a patent application is available to the public after publication of the application (unless a non-publication request in compliance with 37 CFR 1.213(a) is made in the application) or issuance of a patent. Furthermore, the record from an abandoned application may also be available to the public if the application is referenced in a published application or an issued patent (see 37 CFR 1.14). Checks and credit card authorization forms PTO-2038 submitted for payment purposes are not retained in the application file and therefore are not publicly available.

| | |
|---|---|
| Signature | Date |
| Typed or printed name | Registration Number, if applicable |
| Address | Telephone Number |
| Address | |

Enclosures: ☐ Fee Payment

☐ Reply

☐ Terminal Disclaimer Form

☐ Additional sheets containing statements establishing unintentional delay

☐ Other:_____

CERTIFICATE OF MAILING OR TRANSMISSION [37 CFR 1.8(a)]

I hereby certify that this correspondence is being:

☐ Deposited with the United States Postal Service on the date shown below with sufficient postage as first class mail in an envelope addressed to: Mail Stop Petition, Commissioner for Patents, P. O. Box 1450, Alexandria, VA 22313-1450.

☐ Transmitted by facsimile on the date shown below to the United States Patent and Trademark Office at (571) 273-8300.

| | |
|---|---|
| Date | Signature |
| | Typed or printed name of person signing certificate |

# Privacy Act Statement

The **Privacy Act of 1974 (P.L. 93-579)** requires that you be given certain information in connection with your submission of the attached form related to a patent application or patent. Accordingly, pursuant to the requirements of the Act, please be advised that: (1) the general authority for the collection of this information is 35 U.S.C. 2(b)(2); (2) furnishing of the information solicited is voluntary; and (3) the principal purpose for which the information is used by the U.S. Patent and Trademark Office is to process and/or examine your submission related to a patent application or patent. If you do not furnish the requested information, the U.S. Patent and Trademark Office may not be able to process and/or examine your submission, which may result in termination of proceedings or abandonment of the application or expiration of the patent.

The information provided by you in this form will be subject to the following routine uses:

1. The information on this form will be treated confidentially to the extent allowed under the Freedom of Information Act (5 U.S.C. 552) and the Privacy Act (5 U.S.C 552a). Records from this system of records may be disclosed to the Department of Justice to determine whether disclosure of these records is required by the Freedom of Information Act.
2. A record from this system of records may be disclosed, as a routine use, in the course of presenting evidence to a court, magistrate, or administrative tribunal, including disclosures to opposing counsel in the course of settlement negotiations.
3. A record in this system of records may be disclosed, as a routine use, to a Member of Congress submitting a request involving an individual, to whom the record pertains, when the individual has requested assistance from the Member with respect to the subject matter of the record.
4. A record in this system of records may be disclosed, as a routine use, to a contractor of the Agency having need for the information in order to perform a contract. Recipients of information shall be required to comply with the requirements of the Privacy Act of 1974, as amended, pursuant to 5 U.S.C. 552a(m).
5. A record related to an International Application filed under the Patent Cooperation Treaty in this system of records may be disclosed, as a routine use, to the International Bureau of the World Intellectual Property Organization, pursuant to the Patent Cooperation Treaty.
6. A record in this system of records may be disclosed, as a routine use, to another federal agency for purposes of National Security review (35 U.S.C. 181) and for review pursuant to the Atomic Energy Act (42 U.S.C. 218(c)).
7. A record from this system of records may be disclosed, as a routine use, to the Administrator, General Services, or his/her designee, during an inspection of records conducted by GSA as part of that agency's responsibility to recommend improvements in records management practices and programs, under authority of 44 U.S.C. 2904 and 2906. Such disclosure shall be made in accordance with the GSA regulations governing inspection of records for this purpose, and any other relevant (*i.e.*, GSA or Commerce) directive. Such disclosure shall not be used to make determinations about individuals.
8. A record from this system of records may be disclosed, as a routine use, to the public after either publication of the application pursuant to 35 U.S.C. 122(b) or issuance of a patent pursuant to 35 U.S.C. 151. Further, a record may be disclosed, subject to the limitations of 37 CFR 1.14, as a routine use, to the public if the record was filed in an application which became abandoned or in which the proceedings were terminated and which application is referenced by either a published application, an application open to public inspection or an issued patent.
9. A record from this system of records may be disclosed, as a routine use, to a Federal, State, or local law enforcement agency, if the USPTO becomes aware of a violation or potential violation of law or regulation.

UNITED STATES PATENT AND TRADEMARK OFFICE

Commissioner for Patents
United States Patent and Trademark Office
P.O. Box 1450
Alexandria, VA 22313-1450
www.uspto.gov

EDWARDS & ANGELL LLP
P O BOX 55874
BOSTON, MA 02205

**COPY MAILED**

OCT 20 2005

**OFFICE OF PETITIONS**

| | |
|---|---|
| In re Application of | : |
| Kazuki Kobayashi et al | : |
| Application No. 10/956,886 | : DECISION GRANTING PETITION |
| Filed: October 1, 2004 | : UNDER 37 CFR 1.313(c)(2) |
| Attorney Docket No. 58,195-DIV (46547) | : |

This is a decision on the petition, filed October 12, 2005, under 37 CFR 1.313(c)(2) to withdraw the above-identified application from issue after payment of the issue fee.

The petition is **GRANTED**.

The above-identified application is withdrawn from issue for consideration of a submission under 37 CFR 1.114 (request for continued examination). See 37 CFR 1.313(c)(2).

***Petitioner is advised that the issue fee paid in the above-identified application cannot be refunded. If, however, the above-identified application is again allowed, petitioner may request that it be applied towards the issue fee required by the new Notice of Allowance.***[1]

Telephone inquiries should be directed to the undersigned at (571) 272-3218.

This matter is being referred to Technology Center AU 2813 for processing of the request for continued examination under 37 CFR 1.114 and for consideration of the Information Disclosure Statement.

Frances Hicks
Petitions Examiner
Office of Petitions

---

[1] *The request to apply the issue fee to the new Notice may be satisfied by completing and returning the new Issue Fee Transmittal Form PTOL-85(b) (along with any balance due or the amount due at the time of payment), which includes the following language thereon: "Commissioner for Patents is requested to apply the Issue Fee and Publication Fee (if any) or re-apply any previously paid issue fee to the application identified above." Petitioner is advised that, whether a fee is indicated as being due or not, the Issue Fee Transmittal Form* ***must*** *be completed and timely submitted to avoid abandonment. Note the language in bold text on the first page of the Notice of Allowance and Fee(s) Due (PTOL-85).*

UNITED STATES PATENT AND TRADEMARK OFFICE

UNITED STATES DEPARTMENT OF COMMERCE
United States Patent and Trademark Office
Address: COMMISSIONER FOR PATENTS
P.O. Box 1450
Alexandria, Virginia 22313-1450
www.uspto.gov

Robert T. Tobin
KENYON & KENYON
One Broadway
New York, NY 10004

Mail Date: 04/21/2010

| | | |
|---|---|---|
| **Applicant** | : Shinya Sakamoto | : DECISION ON REQUEST FOR |
| **Patent Number** | : 7648191 | : RECALCULATION of PATENT |
| **Issue Date** | : 01/19/2010 | : TERM ADJUSTMENT IN VIEW |
| **Appliction No** | : 10/956,918 | : OF WYETH AND NOTICE OF INTENT TO |
| **Filed** | : 09/30/2004 | : ISSUE CERTIFICATE OF CORRECTION |
| | | : |

The Request for Recalculation is **GRANTED** to the extent indicated.

The patent term adjustment has been determined to be **922** days. The USPTO will *sua sponte* issue a certificate of correction reflecting the amount of PTA days determined by the recalculation.

Prior to the issuance of the certificate of correction, the USPTO will afford patentee an opportunity to be heard and request reconsideration. Accordingly, patentee has **one month or thirty (30) days**, whichever is longer, to file a request for reconsideration of this patent term adjustment calculation. See 35 U.S.C. 154(b)(3)(B)(ii) and 37 CFR 1.322(a)(4). No extensions of time will be granted under 37 CFR 1.136.

Patentee should use document code PET.OP if electronically filing a request for reconsideration of this patent term adjustment calculation. The patentee must also include the information required by 37 CFR 1.705(b)(2) and the fee required by 37 CFR 1.18(e). If patentee does not file a timely request for reconsideration of this patent term adjustment calculation including the information required by 37 CFR 1.705(b)(2) and the fee required by 37 CFR 1.18(e), the USPTO will issue a certificate of correction reflecting the PTA determination noted above.

Patentee should be aware that in order to preserve the right to review in the United States District Court for the District of Columbia of the USPTO patent term adjustment determination, patentee must ensure that he or she also take the steps required under 35 U.S.C. 154(b)(4)(A) in a timely manner. Nothing in the request for recalculation should be construed as providing an alternative time frame for commencing a civil action under 35 U.S.C. 154(b)(4)(A).

Any questions concerning this decision should be directed to the Office of Patent Legal Administration at 571-272-7702.

UNITED STATES PATENT AND TRADEMARK OFFICE

UNITED STATES DEPARTMENT OF COMMERCE
United States Patent and Trademark Office
Address: COMMISSIONER FOR PATENTS
P.O. Box 1450
Alexandria, Virginia 22313-1450
www.uspto.gov

| APPLICATION NO. | FILING DATE | FIRST NAMED INVENTOR | ATTORNEY DOCKET NO. | CONFIRMATION NO. |
|---|---|---|---|---|
| 10/956,922 | 09/30/2004 | Mark Geoffrey Fiedler | 3215/6 | 7211 |

7590 07/23/2008

Mark Fiedler
Recent Memory Incorporated
Apt. 6JE
160 Bleecker Street
New York, NY 10012-1420

| EXAMINER |
|---|
| MESFIN, YEMANE |

| ART UNIT | PAPER NUMBER |
|---|---|
| 2144 | |

| MAIL DATE | DELIVERY MODE |
|---|---|
| 07/23/2008 | PAPER |

## DECISION DISMISSING PETITION UNDER 37 CFR 1.138(d)

*The declaration of express abandonment will not be recognized*

This is in response to the petition under 37 CFR 1.138(d), requesting for a refund of any previously paid search fee and excess claims fee in the above-identified application.

The petition is dismissed.

The express abandonment will **not** be recognized for the reason(s) indicated below:

1. ☒ The petition was not filed in sufficient time to permit the appropriate officials to recognize the abandonment before an examination has been made of the application. See 37 CFR 1.138(d).
2. ☐ The petition was not signed by a party authorized by 37 CFR 1.33(b)(1), (3) or (4).
3. ☐ The application is not an application filed under 35 U.S.C. 111(a) on or after December 8, 2004.
4. ☐ The petition for express abandonment under 1.138(d) is dismissed because the applicant did not pay any search fee and excess claims fees in the above-identified application.

Telephone inquiries should be directed to the Office of Data Management at (571) 272-4200.

Betty Powell

Patent Publication Branch
Office of Data Management



FORM PET651D (Rev. 08/07)

UNITED STATES PATENT AND TRADEMARK OFFICE

Commissioner for Patents
United States Patent and Trademark Office
P.O. Box 1450
Alexandria, VA 22313-1450
www.uspto.gov

MAILED
FROM DIRECTORS OFFICE

DEC 0 3 2004

TECHNOLOGY CENTER 3600

CRAIG W. RODDY
HALLIBURTON ENERYGY SERVICES
P.O. BOX 1431
DUNCAN, OK 73536-0440

| | | |
|---|---|---|
| In re application of | : | **DECISION ON PETITION** |
| Jiten Chatterji et al. | : | **TO MAKE SPECIAL** |
| Application No. 10/956,928 | : | **(APPLICANT'S AGE)** |
| Filed: October 01, 2004 | : | |
| For: RECYCLABLE FOAMED FRACTURING FLUIDS AND METHODS OF USING THE SAME | : | |

This is a decision on the petition submitted on October 01, 2004 under 37 CFR 1.102 (c) to make the above-identified application special under the accelerated examination procedure set forth in MPEP 708.02, Section IV: Applicant's Age.

The petition is **GRANTED**.

An application may be accorded special status upon the filing of a petition providing evidence showing that the applicant is at least 65 years old. Such a showing may be provided by evidence such as a birth certificate or a statement from the applicant.

The evidence submitted with the petition is a signed declaration indicating Mr. Chatterji is at least 65 years of age.

The examiner is directed (1) to make an interference search for possible interfering applications, (2) to promptly examine this application out of turn, and (3) if any interfering application is discovered, to examine such application simultaneously and state in the first official letter of such application that it is being taken out of turn because of a possible interference.

Petitioner is advised that this application will continue to be special, throughout its entire prosecution and pendency, including interference or appeal, if any, only if petitioner makes a prompt ***bona fide*** effort, in response to each Office action, to place the application in condition for allowance, even if it is necessary to conduct an interview with the examiner to accomplish this purpose.

**SUMMARY**: Petition to Make Special **GRANTED**.

Kenneth J. Dorner
Special Programs Examiner
Technology Center 3600
(703) 308-0866

KJD/slb: 11/18/04

UNITED STATES PATENT AND TRADEMARK OFFICE

UNITED STATES DEPARTMENT OF COMMERCE
United States Patent and Trademark Office
Address: COMMISSIONER FOR PATENTS
P.O. Box 1450
Alexandria, Virginia 22313-1450
www.uspto.gov

LEXMARK INTERNATIONAL, INC.
INTELLECTUAL PROPERTY LAW DEPARTMENT
740 WEST NEW CIRCLE ROAD
BLDG. 082-1
LEXINGTON, KY 40550-0999

Mail Date: 04/20/2010

| | | |
|---|---|---|
| **Applicant** | : Charles A. Bast | : DECISION ON REQUEST FOR |
| **Patent Number** | : 7593132 | : RECALCULATION of PATENT |
| **Issue Date** | : 09/22/2009 | : TERM ADJUSTMENT IN VIEW |
| **Appliction No** | : 10/956,935 | : OF WYETH AND NOTICE OF INTENT TO |
| **Filed** | : 09/30/2004 | : ISSUE CERTIFICATE OF CORRECTION |
| | | : |

The Request for Recalculation is **GRANTED** to the extent indicated.

The patent term adjustment has been determined to be **1301** days. The USPTO will *sua sponte* issue a certificate of correction reflecting the amount of PTA days determined by the recalculation.

Prior to the issuance of the certificate of correction, the USPTO will afford patentee an opportunity to be heard and request reconsideration. Accordingly, patentee has **one month or thirty (30) days**, whichever is longer, to file a request for reconsideration of this patent term adjustment calculation. See 35 U.S.C. 154(b)(3)(B)(ii) and 37 CFR 1.322(a)(4). No extensions of time will be granted under 37 CFR 1.136.

Patentee should use document code PET.OP if electronically filing a request for reconsideration of this patent term adjustment calculation. The patentee must also include the information required by 37 CFR 1.705(b)(2) and the fee required by 37 CFR 1.18(e). If patentee does not file a timely request for reconsideration of this patent term adjustment calculation including the information required by 37 CFR 1.705(b)(2) and the fee required by 37 CFR 1.18(e), the USPTO will issue a certificate of correction reflecting the PTA determination noted above.

Patentee should be aware that in order to preserve the right to review in the United States District Court for the District of Columbia of the USPTO patent term adjustment determination, patentee must ensure that he or she also take the steps required under 35 U.S.C. 154(b)(4)(A) in a timely manner. Nothing in the request for recalculation should be construed as providing an alternative time frame for commencing a civil action under 35 U.S.C. 154(b)(4)(A).

Any questions concerning this decision should be directed to the Office of Patent Legal Administration at 571-272-7702.

UNITED STATES PATENT AND TRADEMARK OFFICE

Commissioner for Patents
United States Patent and Trademark Office
P.O. Box 1450
Alexandria, VA 22313-1450
www.uspto.gov

**LARSON AND LARSON**
**11199 69TH STREET NORTH**
**LARGO FL 33773**

COPY MAILED

JUL 11 2007

OFFICE OF PETITIONS

| | | |
|---|---|---|
| In re Application of | : | |
| Kiplinger et al. | : | |
| Application No. 10/956,937 | : | ON PETITION |
| Filed: October 1, 2004 | : | |
| Attorney Docket No. 1711.0 | : | |

This is a decision on the petition under 37 C.F.R. § 1.137(b), filed June 5, 2007, to revive the above-identified application.

The petition is **GRANTED.**

The petition satisfies the conditions for revival pursuant to the provisions of 37 CFR 1.137(b) in that (1) the reply in the form of the Issue Fee Transmittal with payment of the issue and publication fees; (2) the petition fee; and (3) the required statement of unintentional delay have been received. Accordingly, the response has been accepted as having been unintentionally delayed.

This matter is being referred to the Publishing Division for processing into a patent.

Telephone inquiries regarding this decision should be directed to the undersigned at (571) 272-3206.

Liana Walsh
Petitions Examiner
Office of Petitions

UNITED STATES PATENT AND TRADEMARK OFFICE

COMMISSIONER FOR PATENTS
UNITED STATES PATENT AND TRADEMARK OFFICE
P.O. BOX 1450
ALEXANDRIA, VA 22313-1450
www.uspto.gov

TOWNSEND AND TOWNSEND AND CREW, LLP
TWO EMBARCADERO CENTER
EIGHTH FLOOR
SAN FRANCISCO CA 94111-3834

**COPY MAILED**

JUL 12 2007

**OFFICE OF PETITIONS**

| | | |
|---|---|---|
| In re Application of | : | |
| John McKeen et al | : | |
| Application No. 10/956,959 | : | DECISION ON PETITION |
| Filed: September 30, 2004 | : | UNDER 37 CFR 1.137(b) |
| Attorney Docket No. 040128-00300US | : | |

This is a decision on the petition, filed March 8, 2007, which is being treated as a petition under 37 CFR 1.137(b) to revive the instant nonprovisional application for failure to timely notify the U.S. Patent and Trademark (USPTO) of the filing of an application in a foreign country, or under a multinational treaty that requires publication of applications eighteen months after filing. *See* 37 CFR 1.137(f).

The petition is **GRANTED**.

Petitioner states that the instant nonprovisional application is the subject of an application filed in an eighteen-month publication country on September 30, 2005. However, the USPTO was unintentionally not notified of this filing within 45 days subsequent to the filing of the subject application in an eighteen-month publication country.

In view of the above, this application became abandoned pursuant to 35 U.S.C. § 122(b)(2)(B)(iii) and 37 CFR 1.213(c) for failure to timely notify the Office of the filing of an application in a foreign country or under a multilateral international agreement that requires publication of applications 18 months after filing.

A petition to revive an application abandoned pursuant to 35 U.S.C. 122(b)(2)(B)(iii) for failure to notify the USPTO of a foreign filing must be accompanied by:

(1) the required reply which is met by the notification of such filing in a foreign country or under a multinational treaty;
(2) the petition fee as set forth in 37 CFR 1.17(m); and
(3) a statement that the entire delay in filing the required reply from the due date of the reply until the filing of a grantable petition was unintentional.

The instant petition has been found to be in compliance with 37 CFR 1.137(b). Accordingly, the failure to timely notify the USPTO of a foreign or international filing within 45 days after the date of filing of

such foreign or international application as provided by 35 U.S.C. § 122(b)(2)(B)(iii) and 37 CFR 1.213(c) is accepted as having been unintentionally delayed.

The previous Request and Certification under 35 U.S.C. § 122(b)(2)(B)(i) has been rescinded. A Notice Regarding Rescission of Nonpublication Request, which sets forth the projected publication date of October 18, 2007, has been mailed under separate cover.

A Notice of Allowability and a Notice of Allowance and Fee(s) Due were mailed in this case on January 31, 2007. However, in view of the nonpublication request filed with the application, the Notice of Allowance and Fee(s) Due mailed in this case did not require the submission of a publication fee. Therefore, a Notice of Publication Fee Due is being mailed under separate cover since the nonpublication request has been rescinded. Petitioner should note that payment of the publication fee must be submitted within the period set forth in the Notice to avoid abandonment of the application. However, if publication of the application does not occur, applicant may file a request for a refund after the patent issues. *See* 37 CFR 1.211(e).

This application is being referred to Publishing Division to await a reply to the Notice of Publication Fee Due, mailed July 11, 2007. Failure to timely reply will result in the abandonment of the application.

Telephone inquiries concerning this decision should be directed to the undersigned at (571) 272- 3218.

Frances Hicks
Petitions Examiner
Office of Petitions

ATTACHMENT: Notice Regarding Rescission of Nonpublication Request

UNITED STATES PATENT AND TRADEMARK OFFICE

UNITED STATES DEPARTMENT OF COMMERCE
United States Patent and Trademark Office
Address: COMMISSIONER FOR PATENTS
P.O. Box 1450
Alexandria, Virginia 22313-1450
www.uspto.gov

| APPLICATION NUMBER | FILING/RECEIPT DATE | FIRST NAMED APPLICANT | ATTY. DOCKET NO. |
|---|---|---|---|
| 10/956,959 | 09/30/2004 | John McKeen | 040128-000300US |

**CONFIRMATION NO. 8556**

20350
TOWNSEND AND TOWNSEND AND CREW, LLP
TWO EMBARCADERO CENTER
EIGHTH FLOOR
SAN FRANCISCO, CA 94111-3834

Date Mailed: 07/11/2007

## Communication Regarding Rescission Of Nonpublication Request and/or Notice of Foreign Filing

Applicant's rescission of the previously-filed nonpublication request and/or notice of foreign filing is acknowledged. The paper has been reflected in the Patent and Trademark Office's (USPTO's) computer records so that the earliest possible projected publication date can be assigned.

The projected publication date is 10/18/2007.

If applicant rescinded the nonpublication request before or on the date of "foreign filing,"[1] then no notice of foreign filing is required.

If applicant foreign filed the application after filing the above application and before filing the rescission, and the rescission did not also include a notice of foreign filing, then a notice of foreign filing (not merely a rescission) is required to be filed within 45 days of the date of foreign filing. See 35 U.S.C. § 122(b)(2)(B)(iii), and Clarification of the United States Patent and Trademark Office's Interpretation of the Provisions of 35 U.S.C. § 122(b)(2)(B)(ii)-(iv), 1272 Off. Gaz. Pat. Office 22 (July 1, 2003).

If a notice of foreign filing is required and is not filed within 45 days of the date of foreign filing, then the application becomes abandoned pursuant to 35 U.S.C. § 122(b)(2)(B)(iii). In this situation, applicant should either file a petition to revive or notify the Office that the application is abandoned. See 37 CFR 1.137(f). Any such petition to revive will be forwarded to the Office of Petitions for a decision. Note that the filing of the petition will not operate to stay any period of reply that may be running against the application.

Questions regarding petitions to revive should be directed to the Office of Petitions at (571) 272-3282. Questions regarding publications of patent applications should be directed to the patent application publication hotline at (703) 605-4283 or by e-mail pgpub@uspto.gov.

[1] Note, for purpose of this notice, that "foreign filing" means "filing an application directed to the same invention in another country, or under a multilateral international agreement, that requires publication of applications 18 months after filing".

UNITED STATES PATENT AND TRADEMARK OFFICE

UNITED STATES DEPARTMENT OF COMMERCE
United States Patent and Trademark Office
Address: COMMISSIONER FOR PATENTS
P.O. Box 1450
Alexandria, Virginia 22313-1450
www.uspto.gov

TOWNSEND AND TOWNSEND AND CREW, LLP
TWO EMBARCADERO CENTER
EIGHTH FLOOR
SAN FRANCISCO, CA 94111-3834

Mail Date: 04/21/2010

| | | |
|---|---|---|
| **Applicant** | : Yoji Maruyama | : DECISION ON REQUEST FOR |
| **Patent Number** | : 7576952 | : RECALCULATION of PATENT |
| **Issue Date** | : 08/18/2009 | : TERM ADJUSTMENT IN VIEW |
| **Appliction No** | : 10/956,976 | : OF WYETH AND NOTICE OF INTENT TO |
| **Filed** | : 09/30/2004 | : ISSUE CERTIFICATE OF CORRECTION |
| | | : |

The Request for Recalculation is **GRANTED** to the extent indicated.

The patent term adjustment has been determined to be **376** days. The USPTO will *sua sponte* issue a certificate of correction reflecting the amount of PTA days determined by the recalculation.

Prior to the issuance of the certificate of correction, the USPTO will afford patentee an opportunity to be heard and request reconsideration. Accordingly, patentee has **one month or thirty (30) days**, whichever is longer, to file a request for reconsideration of this patent term adjustment calculation. See 35 U.S.C. 154(b)(3)(B)(ii) and 37 CFR 1.322(a)(4). No extensions of time will be granted under 37 CFR 1.136.

Patentee should use document code PET.OP if electronically filing a request for reconsideration of this patent term adjustment calculation. The patentee must also include the information required by 37 CFR 1.705(b)(2) and the fee required by 37 CFR 1.18(e). If patentee does not file a timely request for reconsideration of this patent term adjustment calculation including the information required by 37 CFR 1.705(b)(2) and the fee required by 37 CFR 1.18(e), the USPTO will issue a certificate of correction reflecting the PTA determination noted above.

Patentee should be aware that in order to preserve the right to review in the United States District Court for the District of Columbia of the USPTO patent term adjustment determination, patentee must ensure that he or she also take the steps required under 35 U.S.C. 154(b)(4)(A) in a timely manner. Nothing in the request for recalculation should be construed as providing an alternative time frame for commencing a civil action under 35 U.S.C. 154(b)(4)(A).

Any questions concerning this decision should be directed to the Office of Patent Legal Administration at 571-272-7702.

UNITED STATES PATENT AND TRADEMARK OFFICE

UNITED STATES DEPARTMENT OF COMMERCE
United States Patent and Trademark Office
Address: COMMISSIONER FOR PATENTS
P.O. Box 1450
Alexandria, Virginia 22313-1450
www.uspto.gov

INTEL CORPORATION
c/o CPA Global
P.O. BOX 52050
MINNEAPOLIS, MN 55402

Mail Date: 04/21/2010

| | | |
|---|---|---|
| **Applicant** | : John Ronciak | : DECISION ON REQUEST FOR |
| **Patent Number** | : 7620046 | : RECALCULATION of PATENT |
| **Issue Date** | : 11/17/2009 | : TERM ADJUSTMENT IN VIEW |
| **Appliction No** | : 10/957,001 | : OF WYETH AND NOTICE OF INTENT TO |
| **Filed** | : 09/30/2004 | : ISSUE CERTIFICATE OF CORRECTION |
| | | : |

The Request for Recalculation is **GRANTED** to the extent indicated.

The patent term adjustment has been determined to be **896** days. The USPTO will *sua sponte* issue a certificate of correction reflecting the amount of PTA days determined by the recalculation.

Prior to the issuance of the certificate of correction, the USPTO will afford patentee an opportunity to be heard and request reconsideration. Accordingly, patentee has **one month or thirty (30) days**, whichever is longer, to file a request for reconsideration of this patent term adjustment calculation. See 35 U.S.C. 154(b)(3)(B)(ii) and 37 CFR 1.322(a)(4). No extensions of time will be granted under 37 CFR 1.136.

Patentee should use document code PET.OP if electronically filing a request for reconsideration of this patent term adjustment calculation. The patentee must also include the information required by 37 CFR 1.705(b)(2) and the fee required by 37 CFR 1.18(e). If patentee does not file a timely request for reconsideration of this patent term adjustment calculation including the information required by 37 CFR 1.705(b)(2) and the fee required by 37 CFR 1.18(e), the USPTO will issue a certificate of correction reflecting the PTA determination noted above.

Patentee should be aware that in order to preserve the right to review in the United States District Court for the District of Columbia of the USPTO patent term adjustment determination, patentee must ensure that he or she also take the steps required under 35 U.S.C. 154(b)(4)(A) in a timely manner. Nothing in the request for recalculation should be construed as providing an alternative time frame for commencing a civil action under 35 U.S.C. 154(b)(4)(A).

Any questions concerning this decision should be directed to the Office of Patent Legal Administration at 571-272-7702.

UNITED STATES PATENT AND TRADEMARK OFFICE

UNITED STATES DEPARTMENT OF COMMERCE
United States Patent and Trademark Office
Address: COMMISSIONER FOR PATENTS
P.O. Box 1450
Alexandria, Virginia 22313-1450
www.uspto.gov

K&L Gates LLP
P.O. Box 1135
CHICAGO, IL 60690

Mail Date: 04/20/2010

| | | |
|---|---|---|
| **Applicant** | : Anthony J. Baerlocher | : DECISION ON REQUEST FOR |
| **Patent Number** | : 7591724 | : RECALCULATION of PATENT |
| **Issue Date** | : 09/22/2009 | : TERM ADJUSTMENT IN VIEW |
| **Appliction No** | : 10/957,013 | : OF WYETH AND NOTICE OF INTENT TO |
| **Filed** | : 09/30/2004 | : ISSUE CERTIFICATE OF CORRECTION |
| | | : |

The Request for Recalculation is **GRANTED** to the extent indicated.

The patent term adjustment has been determined to be **581** days. The USPTO will *sua sponte* issue a certificate of correction reflecting the amount of PTA days determined by the recalculation.

Prior to the issuance of the certificate of correction, the USPTO will afford patentee an opportunity to be heard and request reconsideration. Accordingly, patentee has **one month or thirty (30) days**, whichever is longer, to file a request for reconsideration of this patent term adjustment calculation. See 35 U.S.C. 154(b)(3)(B)(ii) and 37 CFR 1.322(a)(4). No extensions of time will be granted under 37 CFR 1.136.

Patentee should use document code PET.OP if electronically filing a request for reconsideration of this patent term adjustment calculation. The patentee must also include the information required by 37 CFR 1.705(b)(2) and the fee required by 37 CFR 1.18(e). If patentee does not file a timely request for reconsideration of this patent term adjustment calculation including the information required by 37 CFR 1.705(b)(2) and the fee required by 37 CFR 1.18(e), the USPTO will issue a certificate of correction reflecting the PTA determination noted above.

Patentee should be aware that in order to preserve the right to review in the United States District Court for the District of Columbia of the USPTO patent term adjustment determination, patentee must ensure that he or she also take the steps required under 35 U.S.C. 154(b)(4)(A) in a timely manner. Nothing in the request for recalculation should be construed as providing an alternative time frame for commencing a civil action under 35 U.S.C. 154(b)(4)(A).

Any questions concerning this decision should be directed to the Office of Patent Legal Administration at 571-272-7702.

## SPE RESPONSE FOR CERTIFICATE OF CORRECTION

Paper No.: _____

DATE : 2/24/09

TO SPE OF : ART UNIT 1792

SUBJECT : Request for Certificate of Correction for Appl. No.: 10957026 Patent No.: 7456106 B2

Please respond to this request for a certificate of correction within 7 days.

**FOR IFW FILES:**

Please review the requested changes/corrections as shown in the **COCIN** document(s) in the IFW application image. No new matter should be introduced, nor should the scope or meaning of the claims be changed.

Please complete the response (see below) and forward the completed response to scanning using document code **COCX**.

**FOR PAPER FILES:**

Please review the requested changes/corrections as shown in the attached certificate of correction. Please complete this form (see below) and forward it with the file to:

**Certificates of Correction Branch (CofC)**
**South Tower - 9A22**
**Palm Location 7580**
**You can fax the Directors/SPE response to 571-270-9990**

*LAMONTE NEWSOME*
**Certificates of Correction Branch**
**703-308-9390 ext. 112**

**Thank You For Your Assistance**

**The request for issuing the above-identified correction(s) is hereby:**
Note your decision on the appropriate box.

| | |
|---|---|
| X Approved | All changes apply. |
| ☐ Approved in Part | Specify below which changes **do not** apply. |
| ☐ Denied | State the reasons for denial below. |

**Comments:** _____

Nadi Norton - SPE 1792 3-16-09

Formatted: Indent: Left: 1.22"

SPE RESPONSE FOR CERTIFICATE OF CORRECTION

DATE 2/19/09

Paper No.: —

TO SPE OF : ART UNIT 1792

SUBJECT : Request for Certificate of Correction for Appl. No.: 10/957030 Patent No.: 7226864B2

Please respond to this request for a certificate of correction within 7 days.

**FOR IFW FILES:**

Please review the requested changes/corrections as shown in the **COCIN** document(s) in the IFW application image. No new matter should be introduced, nor should the scope or meaning of the claims be changed.

Please complete the response (see below) and forward the completed response to scanning using document code **COCX**.

**FOR PAPER FILES:**

Please review the requested changes/corrections as shown in the attached certificate of correction. Please complete this form (see below) and forward it with the file to:

**Certificates of Correction Branch (CofC)**
**South Tower - 9A22**
**Palm Location 7580**

Virginia Tolbert
**Certificates of Correction Branch**
**703-308-9390 ext. 113**

**Thank You For Your Assistance**

**The request for issuing the above-identified correction(s) is hereby:**
Note your decision on the appropriate box.

- ☐ **Approved** — All changes apply.
- ☐ **Approved in Part** — Specify below which changes **do not** apply.
- ☒ **Denied** — State the reasons for denial below.

Comments: Priority under was never claimed for JP 2002-080867. Not entitled to foreign priority as '867 filed more than 1 year before US filing

SPE

1715
Art Unit

UNITED STATES PATENT AND TRADEMARK OFFICE

Commissioner for Patents
United States Patent and Trademark Office
P.O. Box 1450
Alexandria, VA 22313-1450
www.uspto.gov

**Wilson Sonsini Goodrich & Rosati**
**650 Page Mill Road**
**Palo Alto, CA 94304-1050**

COPY MAILED

MAY 22 2009

OFFICE OF PETITIONS

| | | |
|---|---|---|
| In re Application of | : | |
| Qi Chao et al. | : | |
| Application No. 10/957,039 | : | DECISION ON PETITION |
| Filed: October 1, 2004 | : | TO WITHDRAW |
| Attorney Docket No. 464802000102 | : | FROM RECORD |
| | : | |

This is a decision on the Request to Withdraw as attorney or agent of record under 37 C.F.R. § 1.36(b), filed March 10, 2006.

The request is **moot because a revocation of power of attorney has been filed**.

A review of the file record indicates that the power of attorney to Aubrey A. Haddach and all attorneys/agents of record has been revoked by the assignee of the patent application on August 1, 2006. Accordingly, the request to withdraw under 37 C.F.R. § 1.36(b) is moot.

All future communications from the Office will continue to be directed to the below-listed address until otherwise notified by applicant.

Telephone inquires concerning this decision should be directed to Kimberly Inabinet at 571-272-4618.

Kimberly Inabinet
Petitions Examiner
Office of Petitions

cc: Ross J. Oehler
Cephalon, Inc.
41 Moores Road
P.O. Box 4011
Frazer, PA 19355

UNITED STATES PATENT AND TRADEMARK OFFICE

COMMISSIONER FOR PATENTS
UNITED STATES PATENT AND TRADEMARK OFFICE
P.O. BOX 1450
ALEXANDRIA, VA 22313-1450
www.uspto.gov

MAILED

JAN 13 2006

TECHNOLOGY CENTER 2100

MATTINGLY, STANGER, MALUR & BRUNDIDGE, P.C.
1800 DIAGONAL ROAD
SUITE 370
ALEXANDRIA VA 22314

In re Application of: EGUCHI et al.
Application No. 10/957,059
Filed: October 1, 2004
For: STORAGE SYSTEM HAVING DYNAMIC VOLUME ALLOCATION FUNCTION

DECISION ON PETITION TO MAKE SPECIAL (ACCELERATED EXAMINATION) UNDER M.P.E.P. §708.02 (VIII)

This is a response to the petition filed 21 December 2005 under 37 C.F.R. §1.102(d) and M.P.E.P. §708.02 (VIII): Accelerated Examination, to make the above-identified application special.

The Petition is **GRANTED**.

M.P.E.P. §708.02, Section VIII which sets out the prerequisites for a grantable petition for Accelerated Examination under 37 C.F.R. §1.102(d) states in relevant part:

A new application (one which has not received any examination by the examiner) may be granted special status provided that applicant (and this term includes applicant's attorney or agent) complies with each of the following items:

(a) Submits a petition to make special accompanied by the fee set forth in **37 CFR 1.17(h)**;

(b) Presents all claims directed to a single invention, or if the Office determines that all the claims presented are not obviously directed to a single invention, will make an election without traverse as a prerequisite to the grant of special status;

(c) Submits a statement(s) that a pre-examination search was made, listing the field of search by class and subclass, publication, Chemical Abstracts, foreign patents, etc. The pre-examination search must be directed to the invention as claimed in the application for which special status is requested. A search made by a foreign patent office satisfies this requirement;

(d) Submits one copy each of the references deemed most closely related to the subject matter encompassed by the claims if said references are not already of record; and

(e) Submits a detailed discussion of the references, which discussion points out, with the particularity required by 37 CFR 1.111 (b) and (c), how the claimed subject matter is patentable over the references.

Applicant's submission meets all the criteria set out above. Accordingly, the petition is **GRANTED**.

The application file is being forwarded to the Examiner of Record for accelerated examination according to the procedures set forth in MPEP § 708.02, Section VIII.

Pinchus M. Laufer
Special Program Examiner
Technology Center 2100
Computer Architecture, Software and Information Security
571-272-3599

ds

UNITED STATES PATENT AND TRADEMARK OFFICE

Commissioner for Patents
United States Patent and Trademark Office
P.O. Box 1450
Alexandria, VA 22313-1450
www.uspto.gov

MICHAEL BEST & FRIEDRICH, LLP
100 E WISCONSIN AVENUE
MILWAUKEE, WI 53202

COPY MAILED

MAY 11 2005

OFFICE OF PETITIONS

| | | |
|---|---|---|
| In re Application of | : | |
| Daniel Tamburrino | : | |
| Application No. 10/957,067 | : | DECISION GRANTING PETITION |
| Filed: October 1, 2004 | : | UNDER 37 CFR 1.47(b) |
| Attorney Docket No. 047177-9139 | : | |

This is in response to the "Petition Under 37 CFR 1.47(b)," filed March 24, 2005 (Certificate of Mailing date: March 21, 2005).

The petition is granted.

Petitioner has shown that the non-signing inventor has refused to join in the filing of the above-identified application after having been presented with the application papers. Specifically, the statement of facts of David B. Smith and Sheldon L. Wolfe establishes that the inventor was mailed the application papers, including the specification, claims and drawings, but refused the request to sign the declaration. In addition, petitioner has shown that Hussmann Corporation (Hussmann) has a proprietary interest in the above-identified application with the memorandum of law establishing that a court of competent jurisdiction would award title to Hussmann. The petition fee has been paid. Lastly, petitioner has submitted a declaration in compliance with 37 CFR 1.63 and 1.64 and demonstrated that petitioner has shown that such action is necessary to prevent irreparable damage.

This application and papers have been reviewed and found in compliance with 37 CFR 1.47(b). This application is hereby accorded Rule 1.47(b) status.

As provided in Rule 1.47(b), this Office will forward notice of this application's filing to the non-signing inventor at the address given in the petition. Notice of the filing of this application will also be published in the Official Gazette.

The application will be forwarded to Technology Center 3700 for examination *in due course*.

Telephone inquiries regarding this communication should be directed to the undersigned at (571) 272-3228.

Edward J. Tannouse
Petitions Attorney
Office of Petitions/Patent
United States Patent and Trademark Office

UNITED STATES PATENT AND TRADEMARK OFFICE

Commissioner for Patents
United States Patent and Trademark Office
P.O. Box 1450
Alexandria, VA 22313-1450
www.uspto.go

DANIEL TAMBURRINO
2120 BECKENHAM PLACE
DACULA, GA 30019

In re Application of
Daniel Tamburrino
Application No. 10/957,067
Filed: October 1, 2004
Attorney Docket No. 047177-9139

COPY MAILED
MAY 11 2005
OFFICE OF PETITIONS

Dear DANIEL TAMBURRINO:

You are named as the sole inventor in the above identified United States patent application, filed under the provisions of 35 U.S.C. 118 (United States Code), and 37 CFR 1.47(b), Rules of Practice in Patent Cases. Should a patent be granted on the application you will be designated therein as the sole inventor.

As a named inventor you are entitled to inspect any paper in the file wrapper of the application, order copies of all or any part thereof (at a prepaid cost per 37 CFR 1.19) or make your position of record in the application. Alternatively, you may arrange to do any of the preceding through a registered patent attorney or agent presenting written authorization from you. If you care to join the application, counsel of record (see below) would presumably assist you. Joining in the application would entail the filing of an appropriate oath or declaration by you pursuant to 37 CFR 1.63.

Telephone inquiries regarding this communication should be directed to the undersigned at (571) 272-3228. Requests for information regarding your application should be directed to the File Information Unit at (703) 308-2733. Information regarding how to pay for and order a copy of the application, or a specific paper in the application, should be directed to Certification Division at (703) 308-9726 or 1 (800) 972-6382 (outside the Washington D.C. area).

Edward J. Tannouse
Petitions Attorney
Office of Petitions
United States Patent and Trademark Office

MICHAEL BEST & FRIEDRICH, LLP
100 E WISCONSIN AVENUE
MILWAUKEE, WI 53202

UNITED STATES PATENT AND TRADEMARK OFFICE

Commissioner for Patents
United States Patent and Trademark Office
P.O. Box 1450
Alexandria, VA 22313-1450
www.uspto.gov

**ROCKWELL COLLINS, INC.**
**INTELLECTUAL PROPERTY DEPARTMENT**
**400 COLLINS ROAD NE**
**M/S 124-323**
**CEDAR RAPIDS IA 52498**

COPY MAILED

MAY 22 2009

OFFICE OF PETITIONS

| | | |
|---|---|---|
| In re Application of | : | |
| Tapp, Thomas L. | : | |
| Application No. 10/957,084 | : | ON PETITION |
| Filed: October 1, 2004 | : | |
| Attorney Docket No. 047141-0378 | : | |
| (04/CR0040/KE) | | |

This is a decision on the petition under 37 C.F.R. § 1.137(b), filed March 23, 2009, to revive the above-identified application.

The petition is **GRANTED**.

The petition satisfies the requirements of 37 CFR 1.137(b) in that petitioner has supplied (1) the reply in the form of the Issue Fee Transmittal with payment of the issue fee, (2) the petition fee, and (3) a proper statement of unintentional delay.

Telephone inquiries concerning this decision should be directed to the undersigned at (571) 272-3206.

This matter is being referred to the Office of Data Management for processing into a patent.

Liana Walsh
Petitions Examiner
Office of Petitions

UNITED STATES PATENT AND TRADEMARK OFFICE

Commissioner for Patents
United States Patent and Trademark Office
P.O. Box 1450
Alexandria, VA 22313-1450
www.uspto.gov
DIW Oct-08

**LEXMARK INTERNATIONAL, INC.**
**INTELLECTUAL PROPERTY LAW DEPARTMENT**
**740 WEST NEW CIRCLE ROAD**
**BLDG. 082-1**
**LEXINGTON KY 40550-0999**

COPY MAILED
OCT 28 2008

| | | |
|---|---|---|
| In re Application of | : | |
| Kenneth W. Linville et al | : | |
| Application Number: 10/957,093 | : | ON PETITION |
| Filing Date: September 30, 2004 | : | |
| For: METHOD AND SYSTEM FOR | : | |
| AVOIDING BOTTOM OF PAGE | : | |
| PRINTING ARTIFACTS | : | |

This is a decision on the petition under 37 CFR 1.137(a), filed on April 18, 2008, to revive the above-identified application.

The petition is **DISMISSED**.

Any request for reconsideration of this decision must be submitted within TWO (2) MONTHS from the mail date of this decision. Extensions of time under 37 CFR 1.136(a) are permitted. The reconsideration request should include a cover letter entitled "Renewed Petition under 37 CFR 1.137(a)" or "Renewed Petition under 37 CFR 1.137(b)." This is not a final agency decision.

This application became abandoned on December 13, 2007, for failure to timely file a response to the nonfinal rejection mailed on September 12, 2007, which set a two (3)-month shortened statutory period for reply. No extensions of the time for reply in accordance with 37 CFR 1.136(a) were obtained. Notice of Abandonment was mailed on March 21, 2008.

Petitioner asserts unavoidable delay in that the nonfinal rejection was never received. Specifically, petitioner's paralegal in the Legal Department of Lexmark International, Inc.,

states that she personally checked the docketing system and hard-copy file and there is no record or indication that the non-final office action was ever received by Lexmark. It is noted that, petitioner didn't state in the instant petition that the nonfinal rejection was never received.

An amendmenthas been submitted as the reply to the nonfinal rejection mailed on September 12, 2007.

A grantable petition to revive an abandoned application under 37 CFR 1.137(a) must be accompanied by:

> (1) the required reply, unless previously filed. In a nonprovisional application abandoned for failure to prosecute, the required reply may be met by the filing of a continuing application. In a nonprovisional application filed on or after June 8, 1995, and abandoned for failure to prosecute, the required reply may also be met by the filing of a request for continued examination in compliance with § 1.114. In an application or patent, abandoned or lapsed for failure to pay the issue fee or any portion thereof, the required reply must be the payment of the issue fee or any outstanding balance thereof. In an application, abandoned for failure to pay the publication fee, the required reply must include payment of the publication fee;
>
> (2) the petition fee as set forth in § 1.17(l);
>
> (3) a showing to the satisfaction of the Director that the entire delay in filing the required reply from the due date for the reply until the filing of a grantable petition pursuant to this paragraph was unavoidable; and
>
> (4) any terminal disclaimer (and fee as set forth in § 1.20(d)) required pursuant to paragraph (c) of this section.

This petition lacks item (3) above.

Decisions on reviving abandoned applications on the basis of "unavoidable" delay have adopted the reasonably prudent person standard in determining if the delay was unavoidable:

> The word 'unavoidable' . . . is applicable to ordinary human affairs, and requires no more or greater care or diligence than is generally used and observed by prudent and careful men in relation to their most important business. It permits them in the exercise of

> this care to rely upon the ordinary and trustworthy agencies of mail and telegraph, worthy and reliable employees, and such other means and instrumentalities as are usually employed in such important business. If unexpectedly, or through the unforeseen fault or imperfection of these agencies and instrumentalities, there occurs a failure, it may properly be said to be unavoidable, all other conditions of promptness in its rectification being present.[1]

The showing of record is inadequate to establish unavoidable delay within the meaning of 37 CFR 1.137(a). Specifically, an application is "unavoidably" abandoned only where petitioner, or counsel for petitioner, takes all action necessary for a proper response to the outstanding Office action, but through the intervention of unforeseen circumstances, such as failure or mail, telegraph, telefacsimile, or the negligence of otherwise reliable employees, the response is not timely received in the Office.[2]

With regards to the assertion that the nonfinal Office action was never received, MPEP 711.03(c) states:

> In Delgar v. Schulyer, 172 USPQ 513 (D.D.C. 1971), the court decided that the Office should mail a new Notice of Allowance in view of the evidence presented in support of the contention that the applicant's representative did not receive the original Notice of Allowance. Under the reasoning of Delgar, an allegation that an Office action was never received may be considered in a petition to withdraw the holding of abandonment. If adequately supported, the Office may grant the petition to withdraw the holding of abandonment and remail the Office action. That is, the reasoning of Delgar is applicable regardless of whether an application is held abandoned for failure to timely pay the issue fee (35 U.S.C. 151) or for failure to prosecute (35 U.S.C. 133).
>
> To minimize costs and burdens to practitioners and the Office, the Office has modified the showing required to

---

[1] In re Mattullath, 38 App. D.C. 497, 514-15 (1912)(quoting Ex parte Pratt, 1887 Dec. Comm'r Pat. 31, 32-33 (1887)); see also Winkler v. Ladd, 221 F. Supp. 550, 552, 138 USPQ 666, 167-68 (D.D.C. 1963), aff'd, 143 USPQ 172 (D.C. Cir. 1963); Ex parte Henrich, 1913 Dec. Comm'r Pat. 139, 141 (1913). In addition, decisions on revival are made on a "case-by-case basis, taking all the facts and circumstances into account."

[2] Ex parte Pratt, 1887 Dec. Comm'r Pat. 31 (Comm'r Pat. 1887).

> establish nonreceipt of an Office action. The showing required to establish nonreceipt of an Office communication must include a statement from the practitioner describing the system used for recording an Office action received at the correspondence address of record with the USPTO. The statement should establish that the docketing system is sufficiently reliable. It is expected that the record would include, but not be limited to, the application number, attorney docket number, the mail date of the Office action and the due date for the response.
>
> Practitioner must state that the Office action was not received at the correspondence address of record, and that a search of the practitioner's record(s), including any file jacket or the equivalent, and the application contents, indicates that the Office action was not received. A copy of the record(s) used by the practitioner where the non-received Office action would have been entered had it been received is required. A copy of the practitioner's record(s) required to show non-receipt of the Office action should include the master docket for the firm. That is, if a three month period for reply was set in the nonreceived Office action, a copy of the master docket report showing all replies docketed for a date three months from the mail date of the nonreceived Office action must be submitted as documentary proof of nonreceipt of the Office action. If no such master docket exists, the practitioner should so state and provide other evidence such as, but not limited to, the following: the application file jacket; incoming mail log; calendar; reminder system; or the individual docket record for the application in question.
>
> The showing outlined above may not be sufficient if there are circumstances that point to a conclusion that the Office action may have been lost after receipt rather than a conclusion that the Office action was lost in the mail (e.g., if the practitioner has a history of not receiving Office actions).

The petition must be dismissed because petitioner has not provided a copy of the record(s) used by the practitioner where the non-received Office action would have been entered had it been received.

A copy of the master docket report showing all replies docketed for a date three months from the mail date of the nonreceived Office action must be submitted as documentary proof of nonreceipt of the Office action. If no such master docket exists, the practitioner should so state and provide other evidence such as, but not limited to, the following: the application file jacket; incoming mail log; calendar; reminder system; or the individual docket record for the application in question.

If petitioner can provide a showing, as described above, that the nonfinal rejection mailed on September 12, 2007, was not received, petitioner should file a renewed petition under 37 CFR 1.137(a), accompanied by such proof of nonreceipt of the nonfinal rejection mailed on September 12, 2007.

A delay resulting from the lack of knowledge or improper application of the patent statute, rules of practice or the MPEP does not constitute an "unavoidable" delay.[3] A delay caused by an applicant's lack of knowledge or improper application of the patent statute, rules of practice or the MPEP is not rendered "unavoidable" due to: (1) the applicant's reliance upon oral advice from Office employees; or (2) the Office's failure to advise the applicant of any deficiency in sufficient time to permit the applicant to take corrective action.[4]

As the showing presented is insufficient to establish unavoidable delay within the meaning of 35 U.S.C. § 133 and 37 CFR 1.137(a), the petition will be dismissed.

**ALTERNATIVE VENUE**

Petitioner may wish to consider filing a renewed petition under 37 CFR 1.137(b),[5] which now provides that where the delay in

---

[3] Id.

[4] See In re Sivertz, 227 USPQ 255, 256 (Comm'r Pat. 1985); see also In re Colombo, Inc., 33 USPQ2d 1530, 1532 (Comm'r Pat. 1994)(while the Office attempts to notify applicants of deficiencies in their responses in a manner permitting a timely correction, the Office has no obligation to notify parties of deficiencies in their responses in a manner permitting a timely correction).

[5] Effective December 1, 1997, the provisions of 37 CFR 1.137(b) now provide that where the delay in reply was unintentional, a petition may be filed to revive an abandoned application or a lapsed patent pursuant to 37 CFR 1.137(b). A grantable petition filed under the provisions of 37 CFR 1.137(b) must be accompanied by:

(1) the required reply, unless previously filed. In a nonprovisional application abandoned for failure to prosecute, the required reply may be met by the filing of a continuing application. In a nonprovisional utility or plant application filed on or after June 8, 1995, and abandoned for failure to prosecute, the required reply may also be met by the filing of a request for continued examination in compliance with § 1.114. In an application or patent, abandoned or lapsed for failure to pay the issue fee or any portion thereof, the required reply must be the payment of the issue fee or any outstanding balance thereof. In an application, abandoned for

reply was unintentional, a petition may be filed to revive an abandoned application or a lapsed patent pursuant to 37 CFR 1.137(b).

The filing of a petition under the unintentional standard cannot be intentionally delayed and therefore should be filed promptly. A person seeking revival due to unintentional delay cannot make a statement that the delay was unintentional unless the entire delay, including the delay from the date it was discovered that the application was abandoned until the filing of the petition to revive under 37 CFR 1.137(b), was unintentional. A statement that the delay was unintentional is not appropriate if petitioner intentionally delayed the filing of a petition for revival under 37 CFR 1.137(b).

A copy of the form for filing a petition under 37 CFR 1.137(b) to revive an application unintentionally abandoned is enclosed herewith for petitioner's convenience.

Further correspondence with respect to this matter should be addressed as follows:

By mail: Mail Stop Petition
Commissioner for Patents
P.O. Box 1450
Alexandria, VA 22313-1450

By FAX: (571) 273-8300
Attn: Office of Petitions

By hand: Customer Service Window
Mail Stop Petition
401 Dulany Street
Alexandria, VA 22314

---

failure to pay the publication fee, the required reply must include payment of the publication fee;

(2) the petition fee as set forth in 37 CFR 1.17(m);

(3) a statement that the entire delay in filing the required reply from the due date for the reply until the filing of a grantable petition pursuant to 37 CFR 1.137(b) was unintentional. The Director may required additional information where there is a question whether the delay was unintentional; and

(4) any terminal disclaimer (and fee as set forth in 37 CFR 1.20(d)) required pursuant to 37 CFR 1.137(c)).

Telephone inquiries related to this decision should be directed to the undersigned at 571-272-3208.

Karen Creasy

Karen Creasy
Petitions Examiner
Office of Petitions

Encl: PTO/SB/64

PTO/SB/64 (09-08)
Approved for use through 10/31/2008. OMB 0651-0031
U.S. Patent and Trademark Office; U.S. DEPARTMENT OF COMMERCE
Under the Paperwork Reduction Act of 1995, no persons are required to respond to a collection of information unless it displays a valid OMB control number.

# PETITION FOR REVIVAL OF AN APPLICATION FOR PATENT ABANDONED UNINTENTIONALLY UNDER 37 CFR 1.137(b)

Docket Number (Optional)

First named inventor:

Application No.: Art Unit:

Filed: Examiner:

Title:

Attention: Office of Petitions
**Mail Stop Petition**
Commissioner for Patents
P.O. Box 1450
Alexandria, VA 22313-1450
FAX (571) 273-8300

NOTE: If information or assistance is needed in completing this form, please contact Petitions Information at (571) 272-3282.

The above-identified application became abandoned for failure to file a timely and proper reply to a notice or action by the United States Patent and Trademark Office. The date of abandonment is the day after the expiration date of the period set for reply in the office notice or action plus an extensions of time actually obtained.

APPLICANT HEREBY PETITIONS FOR REVIVAL OF THIS APPLICATION

NOTE: A grantable petition requires the following items:
(1) Petition fee;
(2) Reply and/or issue fee;
(3) Terminal disclaimer with disclaimer fee - required for all utility and plant applications filed before June 8, 1995; and for all design applications; and
(4) Statement that the entire delay was unintentional.

1. Petition fee

☐ Small entity-fee $ _____ (37 CFR 1.17(m)). Applicant claims small entity status. See 37 CFR 1.27.

☐ Other than small entity – fee $ _____ (37 CFR 1.17(m))

2. Reply and/or fee

A. The reply and/or fee to the above-noted Office action in the form of _____(identify type of reply):

☐ has been filed previously on _____.
☐ is enclosed herewith.

B. The issue fee and publication fee (if applicable) of $ _____.

☐ has been paid previously on _____.
☐ is enclosed herewith.



This collection of information is required by 37 CFR 1.137(b). The information is required to obtain or retain a benefit by the public which is to file (and by the USPTO to process) an application. Confidentiality is governed by 35 U.S.C. 122 and 37 CFR 1.11 and 1.14. This collection is estimated to take 1.0 hour to complete, including gathering, preparing, and submitting the completed application form to the USPTO. Time will vary depending upon the individual case. Any comments on the amount of time you require to complete this form and/or suggestions for reducing this burden, should be sent to the Chief Information Officer, U.S. Patent and Trademark Office, U.S. Department of Commerce, P.O. Box 1450, Alexandria, VA 22313-1450. DO NOT SEND FEES OR COMPLETED FORMS TO THIS ADDRESS. **SEND TO: Mail Stop Petition, Commissioner for Patents, P.O. Box 1450, Alexandria, VA 22313-1450.**

*If you need assistance in completing the form, call 1-800-PTO-9199 and select option 2.*

Under the Paperwork Reduction Act of 1995, no persons are required to respond to a collection of information unless it displays a valid OMB control number.

3. Terminal disclaimer with disclaimer fee

☐ Since this utility/plant application was filed on or after June 8, 1995, no terminal disclaimer is required.

☐ A terminal disclaimer (and disclaimer fee (37 CFR 1.20(d)) of $ _____ for a small entity or $ _____ for other than a small entity) disclaiming the required period of time is enclosed herewith (see PTO/SB/63).

4. STATEMENT: The entire delay in filing the required reply from the due date for the required reply until the filing of a grantable petition under 37 CFR 1.137(b) was unintentional. [NOTE: The United States Patent and Trademark Office may require additional information if there is a question as to whether either the abandonment or the delay in filing a petition under 37 CFR 1.137(b) was unintentional (MPEP 711.03(c), subsections (III)(C) and (D)).]

## WARNING:

Petitioner/applicant is cautioned to avoid submitting personal information in documents filed in a patent application that may contribute to identity theft. Personal information such as social security numbers, bank account numbers, or credit card numbers (other than a check or credit card authorization form PTO-2038 submitted for payment purposes) is never required by the USPTO to support a petition or an application. If this type of personal information is included in documents submitted to the USPTO, petitioners/applicants should consider redacting such personal information from the documents before submitting them to the USPTO. Petitioner/applicant is advised that the record of a patent application is available to the public after publication of the application (unless a non-publication request in compliance with 37 CFR 1.213(a) is made in the application) or issuance of a patent. Furthermore, the record from an abandoned application may also be available to the public if the application is referenced in a published application or an issued patent (see 37 CFR 1.14). Checks and credit card authorization forms PTO-2038 submitted for payment purposes are not retained in the application file and therefore are not publicly available.

| | |
|---|---|
| Signature | Date |
| Typed or printed name | Registration Number, if applicable |
| Address | Telephone Number |
| Address | |

Enclosures:
☐ Fee Payment
☐ Reply
☐ Terminal Disclaimer Form
☐ Additional sheets containing statements establishing unintentional delay
☐ Other: _____

CERTIFICATE OF MAILING OR TRANSMISSION [37 CFR 1.8(a)]

I hereby certify that this correspondence is being:

☐ Deposited with the United States Postal Service on the date shown below with sufficient postage as first class mail in an envelope addressed to: Mail Stop Petition, Commissioner for Patents, P. O. Box 1450, Alexandria, VA 22313-1450.

☐ Transmitted by facsimile on the date shown below to the United States Patent and Trademark Office at (571) 273-8300.

| | |
|---|---|
| Date | Signature |
| | Typed or printed name of person signing certificate |

# Privacy Act Statement

The **Privacy Act of 1974 (P.L. 93-579)** requires that you be given certain information in connection with your submission of the attached form related to a patent application or patent. Accordingly, pursuant to the requirements of the Act, please be advised that: (1) the general authority for the collection of this information is 35 U.S.C. 2(b)(2); (2) furnishing of the information solicited is voluntary; and (3) the principal purpose for which the information is used by the U.S. Patent and Trademark Office is to process and/or examine your submission related to a patent application or patent. If you do not furnish the requested information, the U.S. Patent and Trademark Office may not be able to process and/or examine your submission, which may result in termination of proceedings or abandonment of the application or expiration of the patent.

The information provided by you in this form will be subject to the following routine uses:

1. The information on this form will be treated confidentially to the extent allowed under the Freedom of Information Act (5 U.S.C. 552) and the Privacy Act (5 U.S.C 552a). Records from this system of records may be disclosed to the Department of Justice to determine whether disclosure of these records is required by the Freedom of Information Act.
2. A record from this system of records may be disclosed, as a routine use, in the course of presenting evidence to a court, magistrate, or administrative tribunal, including disclosures to opposing counsel in the course of settlement negotiations.
3. A record in this system of records may be disclosed, as a routine use, to a Member of Congress submitting a request involving an individual, to whom the record pertains, when the individual has requested assistance from the Member with respect to the subject matter of the record.
4. A record in this system of records may be disclosed, as a routine use, to a contractor of the Agency having need for the information in order to perform a contract. Recipients of information shall be required to comply with the requirements of the Privacy Act of 1974, as amended, pursuant to 5 U.S.C. 552a(m).
5. A record related to an International Application filed under the Patent Cooperation Treaty in this system of records may be disclosed, as a routine use, to the International Bureau of the World Intellectual Property Organization, pursuant to the Patent Cooperation Treaty.
6. A record in this system of records may be disclosed, as a routine use, to another federal agency for purposes of National Security review (35 U.S.C. 181) and for review pursuant to the Atomic Energy Act (42 U.S.C. 218(c)).
7. A record from this system of records may be disclosed, as a routine use, to the Administrator, General Services, or his/her designee, during an inspection of records conducted by GSA as part of that agency's responsibility to recommend improvements in records management practices and programs, under authority of 44 U.S.C. 2904 and 2906. Such disclosure shall be made in accordance with the GSA regulations governing inspection of records for this purpose, and any other relevant (*i.e.*, GSA or Commerce) directive. Such disclosure shall not be used to make determinations about individuals.
8. A record from this system of records may be disclosed, as a routine use, to the public after either publication of the application pursuant to 35 U.S.C. 122(b) or issuance of a patent pursuant to 35 U.S.C. 151. Further, a record may be disclosed, subject to the limitations of 37 CFR 1.14, as a routine use, to the public if the record was filed in an application which became abandoned or in which the proceedings were terminated and which application is referenced by either a published application, an application open to public inspection or an issued patent.
9. A record from this system of records may be disclosed, as a routine use, to a Federal, State, or local law enforcement agency, if the USPTO becomes aware of a violation or potential violation of law or regulation.

UNITED STATES PATENT AND TRADEMARK OFFICE

Commissioner for Patents
United States Patent and Trademark Office
P.O. Box 1450
Alexandria, VA 22313-1450
www.uspto.gov

**LEXMARK INTERNATIONAL, INC.**
**INTELLECTUAL PROPERTY LAW DEPARTMENT**
**740 WEST NEW CIRCLE ROAD**
**BLDG. 082-1**
**LEXINGTON KY 40550-0999**

COPY MAILED

MAR 3 1 2009

OFFICE OF PETITIONS

| | | |
|---|---|---|
| In re Application of | : | |
| Kenneth W. Linville et al | : | |
| Application No. 10/957,093 | : | ON PETITION |
| Filed: September 30, 2004 | : | |
| Attorney Docket No. 2004-0314.02 | : | |

This is a decision on the renewed petition under 37 CFR 1.137(a), filed March 2, 2009, to revive the above-identified application.

The petition is **GRANTED.**

The application became abandoned for failure to reply in a timely manner to the nonfinal rejection mailed September 12, 2007.

The petition satisfies the requirements of 37 CFR 1.137(a) in that petitioner has supplied (1) the required reply in the form of an amendment; (2) the petition fee of $510.00; and (3) a showing to the satisfaction of the Director that the entire delay was unavoidable.

This application is being referred to Technology Center AU 2861 for the examiner to consider the reply received April 18, 2009.

Telephone inquiries concerning this decision should be directed to the undersigned at (571) 272-3208.

Karen Creasy

Karen Creasy
Petitions Examiner
Office of Petitions

UNITED STATES PATENT AND TRADEMARK OFFICE

UNITED STATES DEPARTMENT OF COMMERCE
United States Patent and Trademark Office
Address: COMMISSIONER FOR PATENTS
P.O. Box 1450
Alexandria, Virginia 22313-1450
www.uspto.gov

BLAKELY SOKOLOFF TAYLOR & ZAFMAN LLP
1279 OAKMEAD PARKWAY
SUNNYVALE, CA 94085-4040

Mail Date: 04/21/2010

| | | |
|---|---|---|
| **Applicant** | : Benjamin C. Ling | : DECISION ON REQUEST FOR |
| **Patent Number** | : 7643822 | : RECALCULATION of PATENT |
| **Issue Date** | : 01/05/2010 | : TERM ADJUSTMENT IN VIEW |
| **Appliction No** | : 10/957,115 | : OF WYETH AND NOTICE OF INTENT TO |
| **Filed** | : 09/30/2004 | : ISSUE CERTIFICATE OF CORRECTION |
| | | : |

The Request for Recalculation is **GRANTED** to the extent indicated.

The patent term adjustment has been determined to be **0** days. The USPTO will *sua sponte* issue a certificate of correction reflecting the amount of PTA days determined by the recalculation.

Prior to the issuance of the certificate of correction, the USPTO will afford patentee an opportunity to be heard and request reconsideration. Accordingly, patentee has **one month or thirty (30) days**, whichever is longer, to file a request for reconsideration of this patent term adjustment calculation. See 35 U.S.C. 154(b)(3)(B)(ii) and 37 CFR 1.322(a)(4). No extensions of time will be granted under 37 CFR 1.136.

Patentee should use document code PET.OP if electronically filing a request for reconsideration of this patent term adjustment calculation. The patentee must also include the information required by 37 CFR 1.705(b)(2) and the fee required by 37 CFR 1.18(e). If patentee does not file a timely request for reconsideration of this patent term adjustment calculation including the information required by 37 CFR 1.705(b)(2) and the fee required by 37 CFR 1.18(e), the USPTO will issue a certificate of correction reflecting the PTA determination noted above.

Patentee should be aware that in order to preserve the right to review in the United States District Court for the District of Columbia of the USPTO patent term adjustment determination, patentee must ensure that he or she also take the steps required under 35 U.S.C. 154(b)(4)(A) in a timely manner. Nothing in the request for recalculation should be construed as providing an alternative time frame for commencing a civil action under 35 U.S.C. 154(b)(4)(A).

Any questions concerning this decision should be directed to the Office of Patent Legal Administration at 571-272-7702.

UNITED STATES PATENT AND TRADEMARK OFFICE

Commissioner for Patents
United States Patent and Trademark Office
P.O. Box 1450
Alexandria, VA 22313-1450
www.uspto.gov

COPY MAILED

APR 10 2007

OFFICE OF PETITIONS

WILLIAM J. SAPONE
COLEMAN SUDOL SAPONE P.C.
714 COLORADO AVENUE
BRIDGE PORT, CT 06605

| | | |
|---|---|---|
| In re Application of<br>Wai Hong Chan<br>Application No. 10/957,125<br>Filed: October 1, 2004<br>Attorney Docket No. 650/9-1939 | :<br>:<br>:<br>:<br>: | ON PETITION |

This is a decision in response to the petition, filed October 20, 2006, to revive the above-identified application under the provisions of 37 CFR 1.137(b).

The petition is **GRANTED**.

The application became abandoned for a failure to reply in a timely manner to a non-final Office action mailed March 27, 2006. On October 20, 2006, the present petition was filed. A Notice of Abandonment was subsequently mailed on October 25, 2006.

The petition satisfies the conditions for revival pursuant to the provisions of 37 CFR 1.137(b) in that petitioner has supplied (1) the reply in the form of an amendment; (2) the petition fee of $750; and (3) the requisite statement of unintentional delay.

The application is being referred to Technology Center AU 2875 for consideration of the amendment filed October 20, 2006.

Telephone inquiries concerning this decision should be directed to the undersigned at (571) 272-3204. Inquiries relating to further prosecution should be directed to the Technology Center.

Sherry D. Brinkley
Petitions Examiner
Office of Petitions

UNITED STATES PATENT AND TRADEMARK OFFICE

UNITED STATES DEPARTMENT OF COMMERCE
United States Patent and Trademark Office
Address: COMMISSIONER FOR PATENTS
P.O. Box 1450
Alexandria, Virginia 22313-1450
www.uspto.gov

SEAGATE TECHNOLOGY LLC
INTELLECTUAL PROPERTY DEPARTMENT
920 DISC DRIVE, MS/SV02A7
SCOTTS VALLEY, CA 95066-4544

Mail Date: 04/21/2010

| | | |
|---|---|---|
| **Applicant** | : Mohamed M. Rahman | : DECISION ON REQUEST FOR |
| **Patent Number** | : 7630166 | : RECALCULATION of PATENT |
| **Issue Date** | : 12/08/2009 | : TERM ADJUSTMENT IN VIEW |
| **Appliction No** | : 10/957,147 | : OF WYETH AND NOTICE OF INTENT TO |
| **Filed** | : 09/30/2004 | : ISSUE CERTIFICATE OF CORRECTION |
| | | : |

The Request for Recalculation is **GRANTED** to the extent indicated.

The patent term adjustment has been determined to be **0** days. The USPTO will *sua sponte* issue a certificate of correction reflecting the amount of PTA days determined by the recalculation.

Prior to the issuance of the certificate of correction, the USPTO will afford patentee an opportunity to be heard and request reconsideration. Accordingly, patentee has **one month or thirty (30) days**, whichever is longer, to file a request for reconsideration of this patent term adjustment calculation. See 35 U.S.C. 154(b)(3)(B)(ii) and 37 CFR 1.322(a)(4). No extensions of time will be granted under 37 CFR 1.136.

Patentee should use document code PET.OP if electronically filing a request for reconsideration of this patent term adjustment calculation. The patentee must also include the information required by 37 CFR 1.705(b)(2) and the fee required by 37 CFR 1.18(e). If patentee does not file a timely request for reconsideration of this patent term adjustment calculation including the information required by 37 CFR 1.705(b)(2) and the fee required by 37 CFR 1.18(e), the USPTO will issue a certificate of correction reflecting the PTA determination noted above.

Patentee should be aware that in order to preserve the right to review in the United States District Court for the District of Columbia of the USPTO patent term adjustment determination, patentee must ensure that he or she also take the steps required under 35 U.S.C. 154(b)(4)(A) in a timely manner. Nothing in the request for recalculation should be construed as providing an alternative time frame for commencing a civil action under 35 U.S.C. 154(b)(4)(A).

Any questions concerning this decision should be directed to the Office of Patent Legal Administration at 571-272-7702.

UNITED STATES PATENT AND TRADEMARK OFFICE

Commissioner for Patents
United States Patent and Trademark Office
P.O. Box 1450
Alexandria, VA 22313-1450
www.uspto.gov

US SURGICAL
Division of Tyco Healthcare Group, LP
150 Glover Avenue
Norwalk, CT 06865

COPY MAILED
AUG 0 8 2006
OFFICE OF PETITIONS

| | | |
|---|---|---|
| In re Application of | : | |
| SHIU et al | : | |
| Application No. 10/957,160 | : | DECISION ON PETITION |
| Filed: October 1, 2004 | : | TO WITHDRAW |
| Attorney Docket No. 2925 | : | FROM RECORD |
| | : | |

This is a decision on the Request to Withdraw as attorney or agent of record under 37 C.F.R. § 1.36(b), filed March 10, 2006.

The request is **NOT APPROVED**.

A grantable request to withdraw as attorney/agent of record must be signed by every attorney/agent seeking to withdraw or contain a clear indication that one attorney is signing on behalf of another/others. A request to withdraw will not be approved unless at least 30 (thirty) days would remain between the date of approval and the later of the expiration date of a time to file a response or the expiration date of the maximum time period which can be extended under 37 C.F.R. § 1.136(a).

The Office cannot approve the request at this time since the reasons provided do not meet any of the conditions under the mandatory or permissive categories enumerated in 37 CFR 10.40. Section 10.40 of Title 37 of the Code of Federal Regulation states, "[a] practitioner shall not withdraw from employment in a proceeding before the Office without permission from the Office[.]" More specifically, 37 CFR 10.40 states, "[i]f paragraph (b) of this section is not applicable, a practitioner may not request permission to withdraw in matter pending before the Office unless such request or such withdrawal is" for one the permissive reasons listed in 37 CFR 10.40(c). The reasons set forth in the request, application has been acquired by Integra LifeSciences, Corporation, does not meet any of the conditions set forth in 37 CFR 10.40.

All future communications from the Office will continue to be directed to the above-listed address until otherwise notified by applicant.

Telephone inquiries concerning this decision should be directed to Monica A. Graves at 571-272-7253.

David Bucci
Petitions Examiner
Office of Petitions

cc: Thomas Runk, Esq.
FULWIDER PATTON
Howard Hughes Center
6060 Center Drive, Tenth Floor
Los Angeles, CA 90045

UNITED STATES PATENT AND TRADEMARK OFFICE

Commissioner for Patents
United States Patent and Trademark Office
P.O. Box 1450
Alexandria, VA 22313-1450
www.uspto.gov

**Ray K. Shahani, Esq. Attorney at Law**
**Twin Oaks Office Plaza**
**477 North Ninth Avenue, Suite 112**
**San Mateo, CA 94402-1858**

**COPY MAILED**

JUL 0 9 2008

**OFFICE OF PETITIONS**

| | | |
|---|---|---|
| In re Application of | : | |
| Ashok K. Kapoor | : | |
| Application No. 10/957,169 | : | DECISION ON PETITION |
| Filed: May 30, 2004 | : | TO WITHDRAW |
| Attorney Docket No. SEN-201 (016) | : | FROM RECORD |
| | : | |

This is a decision on the Request to Withdraw as attorney or agent under 37 C.F.R. § 1.36(b) or 37 C.F.R. § 10.40 filed May 29, 2008.

The request is **APPROVED**.

A grantable request to withdraw as attorney/agent of record must be signed by every attorney/agent seeking to withdraw or contain a clear indication that one attorney is signing on behalf of another/others. A request to withdraw will not be approved unless at least 30 (thirty) days would remain between the date of approval and the later of the expiration date of a time to file a response or the expiration date of the maximum time period which can be extended under 37 C.F.R. § 1.136(a).

The request to change the correspondence of record is not acceptable as the requested correspondence address is not that of (1) the first named signing inventor; or (2) an intervening assignee of the entire interest under 37 C.F.R. 3.71. Accordingly, all correspondence will be mailed to the inventor. A courtesy copy of this decision will be mailed to the address noted on the request. If you would like to receive future correspondence then the proper power of attorney documents must be submitted.

It should be noted that no assignee has properly intervened in this application. Compliance with 37 CFR 3.73(b) has not been satisfied.

Applicant is reminded that there is no attorney of record at this time.

Telephone inquires concerning this decision should be directed to Kimberly Inabinet at 571-272-4618.

Kimberly Inabinet
Petitions Examiner
Office of Petitions

cc: Ashok K. Kapoor
1300 South El Camino Real
Suite 502
San Mateo, CA 94402

cc: Sensitron, Inc.
1300 S. El Camino Real, #300
San Mateo, CA 94402

UNITED STATES PATENT AND TRADEMARK OFFICE

UNITED STATES DEPARTMENT OF COMMERCE
United States Patent and Trademark Office
Address: COMMISSIONER FOR PATENTS
P.O. Box 1450
Alexandria, Virginia 22313-1450
www.uspto.gov

| APPLICATION NUMBER | FILING OR 371(C) DATE | FIRST NAMED APPLICANT | ATTY. DOCKET NO./TITLE |
|---|---|---|---|
| 10/957,169 | 09/30/2004 | Ashok K. Kapoor | SEN-201 (016) |

**CONFIRMATION NO. 7897**

**POWER OF ATTORNEY NOTICE**

46770
RAY K. SHAHANI, ESQ., ATTORNEY AT LAW
TWIN OAKS OFFICE PLAZA
477 NORTH NINTH AVENUE, SUITE 112
SAN MATEO, CA 94402-1858

*OC000000030857314*

Date Mailed: 07/08/2008

## NOTICE REGARDING CHANGE OF POWER OF ATTORNEY

This is in response to the Power of Attorney filed 05/29/2008.

- The withdrawal as attorney in this application has been accepted. Future correspondence will be mailed to the new address of record. 37 CFR 1.33.

/kainabinet/

---

Office of Data Management, Application Assistance Unit (571) 272-4000, or (571) 272-4200, or 1-888-786-0101

UNITED STATES PATENT AND TRADEMARK OFFICE

COMMISSIONER FOR PATENTS
UNITED STATES PATENT AND TRADEMARK OFFICE
P.O. BOX 1450
ALEXANDRIA, VA 22313-1450
www.uspto.go

MOSER, PATTERSON & SHERIDAN, LLP/
LUCENT TECHNOLOGIES, INC
595 SHREWSBURY AVENUE
SHREWSBURY, NJ 07702

COPY MAILED

FEB 23 2005

OFFICE OF PETITIONS

In re Application of :
Ganguly et al. :
Application No. 10/957,185 :
Filed: September 30, 2004 :
FOR: METHOD FOR DISTINCT COUNT :
ESTIMATION OVER JOINS OF :
CONTINUOUS UPDATE STREAM :

DECISION GRANTING
STATUS UNDER
37 CFR 1.47(a)

This is in response to a Petition Under 37 CFR 1.47(a), filed January 7, 2005, to allow the other inventor(s) to proceed with the application on behalf of himself or herself and the nonsigning inventor.

The petition is **granted**.

The above-identified application and papers have been reviewed and found in compliance with 37 CFR 1.47(a). This application is hereby accorded Rule 1.47(a) status.

Petitioner has shown that the non-signing inventor, Sumit Ganguly, refuses to join in the application.

As provided in Rule 1.47(a), this Office will forward notice of this application's filing to the non-signing inventor at the address given in the Petition. Notice of the filing of this application will also be published in the Official Gazette.

The application file is being returned to the Office of Initial Patent Examination for continued processing.

Telephone inquiries concerning this matter should be directed to Petitions Attorney Derek L. Woods at (571) 272-3232.

Derek L. Woods
Attorney/Advisor
Office of Petitions

UNITED STATES PATENT AND TRADEMARK OFFICE

COMMISSIONER FOR PATENTS
UNITED STATES PATENT AND TRADEMARK OFFICE
P.O. BOX 1450
ALEXANDRIA, VA 22313-1450
www.uspto.gov

SUMIT GANGULY
192 SECTOR-2
SHAKTINAGAR
BHOPAL
INDIA

COPY MAILED

FEB 23 2005

OFFICE OF PETITIONS

In re Application of :
Ganguly et al. :
Application No. 10/957,185 : LETTER
Filed: September 30, 2004 :
FOR: METHOD FOR DISTINCT COUNT :
ESTIMATION OVER JOINS OF :
CONTINUOUS UPDATE STREAM :

Dear Mr. Ganguly:

You are named as a joint inventor in the above-identified United States patent application filed under the provisions of 35 U.S.C. 116 (United States Code) and 37 CFR 1.47(a), Rules of Practice in Patent Cases. Should a patent be granted on the application you will be designated therein as a joint inventor.

As a named inventor you are entitled to inspect any paper in the file wrapper of the application, order copies of all or any part thereof (at a prepaid cost per 37 CFR 1.19) or make your position of record in the application. Alternatively, you may arrange to do any of the preceding through a registered patent attorney or agent presenting written authorization from you. If you care to join the application, counsel of record (see below) would presumably assist you. Joining in the application would entail the filing of an appropriate oath or declaration by you pursuant to 37 CFR 1.63.

Telephone inquiries regarding this communication should be directed to the undersigned at (571) 272-3232. Requests for information regarding your application should be directed to the File Information Unit at (703) 308-2733. Information regarding how to pay for and order a copy of the application, or a specific paper in the application, should be directed to Certification Division at (703) 308-9726 or 1-800-972-6382 (outside the Washington D.C. area).

Derek L. Woods
Attorney Advisor
Office of Petitions

cc: MOSER, PATTERSON & SHERIDAN, LLP/
LUCENT TECHNOLOGIES, INC
595 SHREWSBURY AVENUE
SHREWSBURY, NJ 07702

UNITED STATES PATENT AND TRADEMARK OFFICE

Commissioner for Patents
United States Patent and Trademark Office
P.O. Box 1450
Alexandria, VA 22313-1450
www.uspto.gov

RYAN, MASON & LEWIS, LLP
90 FOREST AVENUE
LOCUST VALLEY NY 11560

COPY MAILED

OCT 13 2006

OFFICE OF PETITIONS

In re Application of :
Laroia, et al. :
Application No. 10/957,192 :
Filed: October 1, 2004 :
Attorney Docket No. Laroia 34-25-18 :
For: APPARATUS AND METHOD FOR USE IN THE MULTICAST OF TRAFFIC DATA IN WIRELESS MULTIPLE ACCESS COMMUNICATIONS SYSTEMS

ON PETITION

This is a decision on the petition under 37 CFR 1.137(b), filed June 16, 2006 (certificate of mailing date June 14, 2006), to revive the above-identified application.

This application became abandoned for failure to timely reply to the Notice to File Missing Parts of Application mailed August 22, 2005, which set a two month shortened statutory period for reply. No extensions of time having been obtained pursuant to 37 CFR 1.136(a) and no reply being received in the Office, this application became abandoned on October 23, 2005. A Notice of Abandonment was mailed on May 22, 2006.

Applicants have submitted a proper reply to the August 22, 2005 Notice in the form of an executed declaration and the petition fee. The statement of unintentional delay was not signed by a person who would have been in a position of knowing that the delay in filing a timely response was unintentional. Nevertheless, the statement will be accepted. In the event that practitioner has no knowledge that the delay was in fact unintentional, practitioner should make a reasonable inquiry to ascertain that, in fact, the delay was unintentional. If practitioner discovers that the delay was intentional, practitioner must so notify the Office.

The petition under 37 CFR 1.137(b) is **GRANTED**.

After the mailing of this decision, the file will be returned to the Office of Initial Patent Examination for further processing.

Telephone inquiries concerning this matter may be directed to the undersigned at (571) 272-3230.

Shirene Willis Brantley

Shirene Willis Brantley
Senior Petitions Attorney
Office of Petitions

UNITED STATES PATENT AND TRADEMARK OFFICE

Commissioner for Patents
United States Patent and Trademark Office
P.O. Box 1450
Alexandria, VA 22313-1450
www.uspto.gov

SCHWEGMAN, LUNDBERG & WOESSNER, PA
P.O. BOX 2938
MINNEAPOLIS, MN 55402

MAILED

MAR 13 2009

OFFICE OF PETITIONS

| | | |
|---|---|---|
| In re Application of | : | |
| Fay Hua, et al. | : | |
| Application No. 10/957,196 | : | DECISION ON PETITION |
| Filed: September 30, 2004 | : | |
| Attorney Docket No. 884.D39US1 | : | |

This is a decision on the petition under the unintentional provisions of 37 CFR 1.137(b), filed February 3, 2009, to revive the above-identified application.

There is no indication that the person signing the instant petition was ever given a power of attorney or authorization of agent to prosecute the above-identified application. In accordance with 37 CFR 1.34(a), the signature appearing on the petition shall constitute a representation to the United States Patent and Trademark Office that he/she is authorized to represent the particular party in whose behalf he/she acts. However, if petitioner desires to receive future correspondence regarding this application, the appropriate power of attorney or authorization of agent must be submitted. A courtesy copy of this decision is being mailed to petitioner. Nevertheless, all future correspondence regarding this application file will be directed solely to the address of record until otherwise instructed.

It is not apparent whether the statement of unintentional delay was signed by a person who would have been in a position of knowing that the entire delay in filing the required reply from the due date for the reply until the filing of a grantable petition pursuant to 37 CFR 1.137(b) was unintentional. Nevertheless, in accordance with 37 CFR 10.18, the statement is accepted as constituting a certification of unintentional delay. However, in the event that petitioner has no knowledge that the delay was unintentional, petitioner must make such an inquiry to ascertain that, in fact, the delay was unintentional. If petitioner discovers that the delay was intentional, petitioner must so notify the Office.

This application became abandoned for failure to timely pay the issue and publication fees on or before October 11, 2008, as required by the Notice of Allowance and Fee(s) Due, mailed July 11, 2008. Accordingly, the date of abandonment of this application is October 12, 2008.

The petition satisfies the requirements of 37 CFR 1.137(b) in that petitioner has supplied (1) the reply in the form of payment of the issue fee of $1510 and the publication fee of $300, (2) the petition fee of $1620; and (3) a proper statement of unintentional delay.

In view of the above, the petition is **GRANTED**.

The power of attorney submitted with the petition on February 3, 2009 is not accepted. In order for an assignee to take action in a case before the Office, compliance with 37 CFR 3.73(b) must be satisfied. More specifically, 37 CFR 3.73(b) provides that: (1) when an assignee seeks to take action in a matter before the Office, the assignee must establish its ownership of the property to the satisfaction of the Commissioner; (2) ownership is established by submitting to the Office, in the Office file related to the matter in which action is sought to be taken, documentary evidence of a chain of title from the original owner to the assignee (e.g., copy of an executed assignment submitted for recording) or by specifying (e.g., reel and frame number) where such evidence is recorded in the Office; (3) the submission establishing ownership must be signed by a party authorized to act on behalf of the assignee; and (4) documents submitted to establish ownership may be required to be recorded as a condition to permitting the assignee to take action in a matter pending before the Office. The statement filed under 37 CFR 3.73(b) does not list the proper reel and frame number. A blank 37 CFR 3.73(b) accompanies this decision.

Telephone inquiries concerning this decision should be directed to undersigned at (571) 272-1642. All other inquiries concerning the status of this application should be directed to the Office of Data Management.

This application is being referred to Office of Data Management for processing into a patent.

April M. Wise
Petitions Examiner
Office of Petitions

Attachment: blank copy of 3.73(b)

cc: INTEL CORPORATION
C/O CPA GLOBAL
P.O. BOX 52050
MINNEAPOLIS, MN 55402

UNITED STATES PATENT AND TRADEMARK OFFICE

Commissioner for Patents
United States Patent and Trademark Office
P.O. Box 1450
Alexandria, VA 22313-1450
www.uspto.gov

COPY MAILED

MAR 16 2007

OFFICE OF PETITIONS

**FOLEY & LARDNER LLP**
**P.O. BOX 80278**
**SAN DIEGO CA 92138-0278**

| | | |
|---|---|---|
| In re Application of | : | |
| Eric Liu et al. | : | |
| Application No. 10/957,209 | : | DECISION ON PETITION |
| Filed: October 1, 2004 | : | TO WITHDRAW |
| Attorney Docket No. 047349-0201 | : | FROM RECORD |
| | : | |

This is a decision on the Request to Withdraw as attorney or agent of record under 37 C.F.R. § 1.36(b), filed March 14, 2006.

The request is **NOT APPROVED**.

A grantable request to withdraw as attorney/agent of record must be signed by every attorney/agent seeking to withdraw or contain a clear indication that one attorney is signing on behalf of another/others. A request to withdraw will not be approved unless at least 30 (thirty) days would remain between the date of approval and the later of the expiration date of a time to file a response or the expiration date of the maximum time period which can be extended under 37 C.F.R. § 1.136(a).

The Office cannot approve the request at this time since the reasons provided do not meet any of the conditions under the mandatory or permissive categories enumerated in 37 CFR 10.40. Section 10.40 of Title 37 of the Code of Federal Regulation states, "[a] practitioner shall not withdraw from employment in a proceeding before the Office without permission from the Office[.]" More specifically, 37 CFR 10.40 states, "[i]f paragraph (b) of this section is not applicable, a practitioner may not request permission to withdraw in matter pending before the Office unless such request or such withdrawal is" for one the permissive reasons listed in 37 CFR 10.40(c). The reasons set forth in the request, ***applicant with not be prejudiced by said withdrawal***, do not meet any the conditions set forth in 37

All future communications from the Office will continue to be directed to the above-listed address until otherwise notified by applicant.

Telephone inquiries concerning this decision should be directed to Terri Williams at 571-272- 2991.

T. Williams

Terri Williams
Petitions Examiner
Office of Petitions

cc: **Pryme Advance Corporation**
**480 Apollo Street, Suite E**
**Brea, CA 92821**

# UNITED STATES PATENT AND TRADEMARK OFFICE

UNITED STATES DEPARTMENT OF COMMERCE
United States Patent and Trademark Office
Address: COMMISSIONER FOR PATENTS
P.O. Box 1450
Alexandria, Virginia 22313-1450
www.uspto.gov

| APPLICATION NO. | FILING DATE | FIRST NAMED INVENTOR | ATTORNEY DOCKET NO. | CONFIRMATION NO. |
|---|---|---|---|---|
| 10/957,287 | 09/30/2004 | Jay Paul Drummond | D-1077+1 DIV2 | 7877 |

28995 7590 03/11/2010
RALPH E. JOCKE
Walker & Jocke
231 SOUTH BROADWAY
MEDINA, OH 44256

| EXAMINER |
|---|
| CHENCINSKI, SIEGFRIED E |

| ART UNIT | PAPER NUMBER |
|---|---|
| 3695 | |

| MAIL DATE | DELIVERY MODE |
|---|---|
| 03/11/2010 | PAPER |

**Please find below and/or attached an Office communication concerning this application or proceeding.**

The time period for reply, if any, is set in the attached communication.

UNITED STATES PATENT AND TRADEMARK OFFICE

Commissioner for Patents
United States Patent and Trademark Office
P.O. Box 1450
Alexandria, VA 22313-1450
www.uspto.gov

MAR 11 2010

RALPH E. JOCKE
Walker & Jocke
231 SOUTH BROADWAY
MEDINA OH 44256

| | | |
|---|---|---|
| In re Application of | : | DECISION ON PETITION |
| Jay DRUMMOND et al. | : | TO WITHDRAW FINALITY |
| Appl. No. 10/957,287 | : | OF OFFICE ACTION |
| Filed: September 30, 2004 | : | UNDER 37 CFR 1.181 |
| For: CASH DISPENSING AUTOMATED | : | |
| BANKING MACHINE AND METHOD | : | |

This is a decision on applicant's petition under 37 CFR 1.181 filed on May 7, 2009 to withdraw the finality of the Office action mailed on October 28, 2008.

The petition is **DISMISSED AS MOOT.**

A review of the file reveals that a first non-final Office action rejecting all of the claims was mailed to applicant on March 21, 2007. Applicant submitted an amendment with argument on June 21, 2007. The examiner issued a second non-final Office action rejecting all of the claims on September 18, 2007. Applicant filed a response with arguments on February 19, 2008. The examiner issued a final Office action on October 28, 2008. Applicant filed a response with argument, and a request that the finality of the Office action of October 28, 2008 be removed as premature. Subsequently, applicant filed a request for reconsideration along with a 37 C.F.R. 1.132 affidavit by Patrick C. Green on January 12, 2009. The examiner mailed an Advisory action on April 10, 2009 stating that applicant's request to withdraw the finality was not persuasive. On May 7, 2009, applicant filed a petition under 37 CFR 1.181 to withdraw the finality of the Office action of October 28, 2008. On May 8, 2009, applicant filed a Request for Continued Examination (RCE) and an amendment to the claims.

Since the extended period for response to the final Office action expired on April 28, 2009, the application is now abandoned for failure to timely respond to an Office action. As the petition was filed on May 7, 2009 which was after the application was abandoned, it was not considered to be timely. As such, the issue of premature finality of the Office action dated October 28, 2008 is moot. Furthermore, as the RCE was filed on May 8, 2009 after the abandonment of the application, the RCE submission was not proper.

Summary: The petition is **DISMISSED as MOOT**.

Any questions or comments with respect to the decision should be forwarded to Supervisory Patent Examiner Charles Kyle at (571) 272-6746.

Wynn Coggins, Director
Technology Center 3600
571-272-5350

ck/lm: 3/9/10
LM

UNITED STATES PATENT AND TRADEMARK OFFICE

Commissioner for Patents
United States Patent and Trademark Office
P.O. Box 1450
Alexandria, VA 22313-1450
www.uspto.gov

COPY MAILED
JUN 14 2006
OFFICE OF PETITIONS

SCHOX PLC
209 N. MAIN STREET #200
ANN ARBOR, MI 48104

In re Application of Kaufman :
Application No. 10/957,301 : Decision on Petition
Filing Date: September 30, 2004 :
Attorney Docket No. STIN-P02 :

This is a decision on the petition under 37 CFR 1.137(b), filed April 20, 2006, to revive the above-identified application.

The petition is **granted**.

A non-final Office action was mailed October 3, 2005, to a previous address for the attorney. As a result, a reply was not filed and the application became abandoned as of January 4, 2006.

The instant petition requests revival of the application.

Petitioner has met the requirements to revive the above-identified application pursuant to 37 CFR 1.137(b). Therefore, the petition is granted and the application is revived.

The Office notes that future Power of Attorney forms should ensure the new customer number is placed in the section for correspondence address as well as the section for the new appointed representatives. The failure to include the customer number in both locations *might* result in the address of record not being changed for an application.

A Notice of Publication of Application was mailed and returned to the Office as undeliverable. As a courtesy, a copy of the Notice is attached to this decision.

Technology Center Art Unit 2836 will be informed of the instant decision and the application will be further examined in due course.

Telephone inquiries regarding this communication should be directed to Petitions Attorney Steven Brantley at (571) 272-3203.

Charles Steven Brantley
Senior Petitions Attorney
Office of Petitions

Attached: Copy of Notice of Publication of Application

IFW

UNITED STATES PATENT AND TRADEMARK OFFICE

UNITED STATES DEPARTMENT OF COMMERCE
United States Patent and Trademark Office
Address: COMMISSIONER FOR PATENTS
P.O. Box 1450
Alexandria, Virginia 22313-1450
www.uspto.gov

| APPLICATION NUMBER | FILING OR 371 (c) DATE | FIRST NAMED APPLICANT | ATTY. DOCKET NO. |
|---|---|---|---|
| 10/957,301 | 09/30/2004 | Dennis R. Kaufman | STIN-P02 |

CONFIRMATION NO. 7053

*OC000000018419241*

OIPE IAP48
MAY 05 2006
PATENT & TRADEMARK OFFICE

Jeffrey Schox, Esq.
Schox, PLC
Suite 2A
209 S. Fourth Avenue
Ann Arbor, MI 48104

**Title:** Stun gun

**Publication No.** US-2006-0067026-A1
**Publication Date:** 03/30/2006

## NOTICE OF PUBLICATION OF APPLICATION

The above-identified application will be electronically published as a patent application publication pursuant to 37 CFR 1.211, et seq. The patent application publication number and publication date are set forth above.

The publication may be accessed through the USPTO's publically available Searchable Databases via the Internet at www.uspto.gov. The direct link to access the publication is currently http://www.uspto.gov/patft/.

The publication process established by the Office does not provide for mailing a copy of the publication to applicant. A copy of the publication may be obtained from the Office upon payment of the appropriate fee set forth in 37 CFR 1.19(a)(1). Orders for copies of patent application publications are handled by the USPTO's Office of Public Records. The Office of Public Records can be reached by telephone at (703) 308-9726 or (800) 972-6382, by facsimile at (703) 305-8759, by mail addressed to the United States Patent and Trademark Office, Office of Public Records, Alexandria, VA 22313-1450 or via the Internet.

In addition, information on the status of the application, including the mailing date of Office actions and the dates of receipt of correspondence filed in the Office, may also be accessed via the Internet through the Patent Electronic Business Center at www.uspto.gov using the public side of the Patent Application Information and Retrieval (PAIR) system. The direct link to access this status information is currently http://pair.uspto.gov/. Prior to publication, such status information is confidential and may only be obtained by applicant using the private side of PAIR.

Further assistance in electronically accessing the publication, or about PAIR, is available by calling the Patent Electronic Business Center at 703-305-3028.

UNITED STATES PATENT AND TRADEMARK OFFICE

COMMISSIONER FOR PATENTS
UNITED STATES PATENT AND TRADEMARK OFFICE
P.O. BOX 1450
ALEXANDRIA, VA 22313-1450
www.uspto.gov

TASER INTERNATIONAL, INC.
17800 N. 85TH STREET
SCOTTSDALE, AZ 85255-9603

**COPY MAILED**

OCT 21 2005

**OFFICE OF PETITIONS**

In re Application of :
Nerheim et al. :
Application No. 10/957,315 :
Filed: September 30, 2004 : ON PETITION
For: SYSTEMS AND METHODS FOR :
ILLUMINATING A SPARK GAP IN AN :
ELECTRIC DISCHARGE WEAPON :

This is a decision in response to the Petition under 37 CFR 1.137(b), filed September 27, 2005, to revive the above-identified application.

This Petition is hereby **granted**.

The above-identified application became abandoned for failure to reply in a timely manner to the Notice to File Missing Parts of Nonprovisional Application (hereinafter "Notice"), mailed December 7, 2004. The Notice set a period for reply of two (2) months from the mail date of the Notice. Extensions of time were available under 37 CFR 1.136(a). No reply having been received, the application became abandoned on March 8, 2005. A Notice of Abandonment was mailed August 18, 2005.

With the instant petition Petitioner has filed the necessary documents and paid the requisite fees.

The Oath/declaration has been entered and made of record.

This application is being forwarded to the Office of Initial Patent Examination for continued processing in due course.

Telephone inquiries concerning this matter should be directed to the undersigned at (571) 272-3232.

Derek L. Woods
Attorney
Office of Petitions

UNITED STATES PATENT AND TRADEMARK OFFICE

Commissioner for Patents
United States Patent and Trademark Office
P.O. Box 1450
Alexandria, VA 22313-1450
www.uspto.gov

**TASER INTERNATIONAL, INC.**
**17800 N. 85TH STREET**
**SCOTTSDALE AZ 85255-9603**

COPY MAILED

JAN 11 2008

OFFICE OF PETITIONS

| | | |
|---|---|---|
| In re Application of | : | |
| **NERHEIM**, et al. | : | |
| Application No. 10/957,315 | : | DECISION ON PETITION |
| Filed: September 30, 2004 | : | |
| Attorney Docket No. **101.00042** | : | |

This is a decision on the petition under the unintentional provisions of 37 CFR 1.137(b), filed May 1, 2007, to revive the above-identified application.

The petition is **GRANTED.**

This application became abandoned for failure to timely pay the issue and publication fees on or before April 3, 2007, as required by the Notice of Allowance and Fee(s) Due, mailed January 3, 2007. Accordingly, the date of abandonment of this application is April 4, 2007.

The petition satisfies the requirements of 37 CFR 1.137(b) in that petitioner has supplied (1) the reply in the form of payment of the issue fee of $700 and the publication fee of $300, (2) the petition fee of $750; and (3) a proper statement of unintentional delay.

Telephone inquiries concerning this decision should be directed to Monica A. Graves at (571) 272-7253.

This application is being referred to Publishing Division for processing into a patent.

Sherry D. Brinkley
Petitions Examiner
Office of Petitions

UNITED STATES PATENT AND TRADEMARK OFFICE

UNITED STATES DEPARTMENT OF COMMERCE
United States Patent and Trademark Office
Address: COMMISSIONER FOR PATENTS
P.O. Box 1450
Alexandria, Virginia 22313-1450
www.uspto.gov

PERKINS COIE LLP/MSFT
P. O. BOX 1247
SEATTLE, WA 98111-1247

Mail Date: 04/20/2010

| | | |
|---|---|---|
| **Applicant** | : Wei-Ying Ma | : DECISION ON REQUEST FOR |
| **Patent Number** | : 7609898 | : RECALCULATION of PATENT |
| **Issue Date** | : 10/27/2009 | : TERM ADJUSTMENT IN VIEW |
| **Appliction No** | : 10/957,316 | : OF WYETH AND NOTICE OF INTENT TO |
| **Filed** | : 10/01/2004 | : ISSUE CERTIFICATE OF CORRECTION |
| | | : |

The Request for Recalculation is **GRANTED** to the extent indicated.

The patent term adjustment has been determined to be **1304** days. The USPTO will *sua sponte* issue a certificate of correction reflecting the amount of PTA days determined by the recalculation.

Prior to the issuance of the certificate of correction, the USPTO will afford patentee an opportunity to be heard and request reconsideration. Accordingly, patentee has **one month or thirty (30) days**, whichever is longer, to file a request for reconsideration of this patent term adjustment calculation. See 35 U.S.C. 154(b)(3)(B)(ii) and 37 CFR 1.322(a)(4). No extensions of time will be granted under 37 CFR 1.136.

Patentee should use document code PET.OP if electronically filing a request for reconsideration of this patent term adjustment calculation. The patentee must also include the information required by 37 CFR 1.705(b)(2) and the fee required by 37 CFR 1.18(e). If patentee does not file a timely request for reconsideration of this patent term adjustment calculation including the information required by 37 CFR 1.705(b)(2) and the fee required by 37 CFR 1.18(e), the USPTO will issue a certificate of correction reflecting the PTA determination noted above.

Patentee should be aware that in order to preserve the right to review in the United States District Court for the District of Columbia of the USPTO patent term adjustment determination, patentee must ensure that he or she also take the steps required under 35 U.S.C. 154(b)(4)(A) in a timely manner. Nothing in the request for recalculation should be construed as providing an alternative time frame for commencing a civil action under 35 U.S.C. 154(b)(4)(A).

Any questions concerning this decision should be directed to the Office of Patent Legal Administration at 571-272-7702.

UNITED STATES PATENT AND TRADEMARK OFFICE

UNITED STATES DEPARTMENT OF COMMERCE
United States Patent and Trademark Office
Address: COMMISSIONER FOR PATENTS
P.O. Box 1450
Alexandria, Virginia 22313-1450
www.uspto.gov

PERKINS COIE LLP/MSFT
P. O. BOX 1247
SEATTLE, WA 98111-1247

Mail Date: 04/20/2010

| | | |
|---|---|---|
| **Applicant** | : Benyu Zhang | : DECISION ON REQUEST FOR |
| **Patent Number** | : 7590603 | : RECALCULATION of PATENT |
| **Issue Date** | : 09/15/2009 | : TERM ADJUSTMENT IN VIEW |
| **Appliction No** | : 10/957,329 | : OF WYETH AND NOTICE OF INTENT TO |
| **Filed** | : 10/01/2004 | : ISSUE CERTIFICATE OF CORRECTION |
| | | : |

The Request for Recalculation is **GRANTED** to the extent indicated.

The patent term adjustment has been determined to be **562** days. The USPTO will *sua sponte* issue a certificate of correction reflecting the amount of PTA days determined by the recalculation.

Prior to the issuance of the certificate of correction, the USPTO will afford patentee an opportunity to be heard and request reconsideration. Accordingly, patentee has **one month or thirty (30) days**, whichever is longer, to file a request for reconsideration of this patent term adjustment calculation. See 35 U.S.C. 154(b)(3)(B)(ii) and 37 CFR 1.322(a)(4). No extensions of time will be granted under 37 CFR 1.136.

Patentee should use document code PET.OP if electronically filing a request for reconsideration of this patent term adjustment calculation. The patentee must also include the information required by 37 CFR 1.705(b)(2) and the fee required by 37 CFR 1.18(e). If patentee does not file a timely request for reconsideration of this patent term adjustment calculation including the information required by 37 CFR 1.705(b)(2) and the fee required by 37 CFR 1.18(e), the USPTO will issue a certificate of correction reflecting the PTA determination noted above.

Patentee should be aware that in order to preserve the right to review in the United States District Court for the District of Columbia of the USPTO patent term adjustment determination, patentee must ensure that he or she also take the steps required under 35 U.S.C. 154(b)(4)(A) in a timely manner. Nothing in the request for recalculation should be construed as providing an alternative time frame for commencing a civil action under 35 U.S.C. 154(b)(4)(A).

Any questions concerning this decision should be directed to the Office of Patent Legal Administration at 571-272-7702.

UNITED STATES PATENT AND TRADEMARK OFFICE

Commissioner for Patents
United States Patent and Trademark Office
P.O. Box 1450
Alexandria, VA 22313-1450
www.uspto.gov

BIRCH STEWART KOLASCH & BIRCH
PO BOX 747
FALLS CHURCH VA 22040-0747

COPY MAILED

JUN 15 2007

OFFICE OF PETITIONS

| | | |
|---|---|---|
| In re Application of | : | |
| Yashukiko Kachi | : | |
| Application No. 10/957,351 | : | DECISION ON PETITION |
| Filed: September 30, 2004 | : | TO WITHDRAW |
| Attorney Docket No. 0879-0460PUS1 | : | FROM RECORD |
| | : | |

This is a decision on the Request to Withdraw as attorney or agent of record under 37 C.F.R. § 1.36(b) filed November 21, 2006.

The request is **APPROVED**.

A grantable request to withdraw as attorney/agent of record must be signed by every attorney/agent seeking to withdraw or contain a clear indication that one attorney is signing on behalf of another/others. A request to withdraw will not be approved unless at least 30 (thirty) days would remain between the date of approval and the later of the expiration date of a time to file a response or the expiration date of the maximum time period which can be extended under 37 C.F.R. § 1.136(a).

The request was signed by Matthew E. Hinsch on behalf of all attorneys of record who are associated with customer No. 20350.

All attorneys/agents associated with the Customer Number 20350 have been withdrawn.

Applicant is reminded that there is no attorney of record at this time.

The request to change the correspondence of record is not acceptable as the requested correspondence address is not that of: (1) the first named signing inventor; or (2) an intervening assignee of the entire interest under 37 C.F.R 3.71. All future communications from the Office will be directed to the assignee of the entire interest at the first copied address below until otherwise properly notified by the applicant.

There are no pending Office actions at the present time.

Telephone inquiries concerning this decision should be directed to undersigned at 571-272-1642.

April M. Wise
Petitions Examiner
Office of Petitions

cc: AVIDIA RESEARCH INSTITUTE
2450 BAYSHORE PARKWAY
MOUNTAIN VIEW, CA 94043

cc: CHARLES K. SHOLTZ, PH.D.
AMGEN, INC.
1120 VETERANS BOULEVARD
SOUTH SAN FRANCISCO, CA 94080

UNITED STATES PATENT AND TRADEMARK OFFICE

UNITED STATES DEPARTMENT OF COMMERCE
United States Patent and Trademark Office
Address: COMMISSIONER FOR PATENTS
P.O. Box 1450
Alexandria, Virginia 22313-1450
www.uspto.gov

| APPLICATION NUMBER | FILING OR 371 (c) DATE | FIRST NAMED APPLICANT | ATTY. DOCKET NO./TITLE |
|---|---|---|---|
| 10/957,351 | 09/30/2004 | Willem P.C. Stemmer | 022013-001400US |

**CONFIRMATION NO. 6850**

*OC000000024218051*

20350
TOWNSEND AND TOWNSEND AND CREW, LLP
TWO EMBARCADERO CENTER
EIGHTH FLOOR
SAN FRANCISCO, CA 94111-3834

Date Mailed: 06/05/2007

## NOTICE REGARDING CHANGE OF POWER OF ATTORNEY

This is in response to the Power of Attorney filed 11/21/2006.

- The withdrawal as attorney in this application has been accepted. Future correspondence will be mailed to the new address of record. 37 CFR 1.33.

---

Office of Initial Patent Examination (571) 272-4000, or 1-800-PTO-9199
FORMER ATTORNEY/AGENT COPY

OIPE IAP74
JUL 16 2007
PATENT & TRADEMARK OFFICE

BIRCH, STEWART, KOLASCH & BIRCH, LLP
INTELLECTUAL PROPERTY LAW

8110 GATEHOUSE ROAD
SUITE 100 EAST
FALLS CHURCH, VA 22042-1248
USA

(703) 205-8000
FAX: (703) 205-8050
(703) 698-8590 (G IV)

e-mail: mailroom@bskb.com
web: http://www.bskb.com

CALIFORNIA OFFICE:
SAN DIEGO, CALIFORNIA

July 12, 2007

Attn: April M. Wise
Commissioner for Patents
Office of Petitions
Untied States Patent and Trademark Office
P.O. Box 1450
Alexandria, VA 22313-1450

Dear Ms. Wise,

Pursuant to our telephone conversation of July 12th 2007, I am returning the enclosed Decision on Petition to Withdraw From Record sent to my office in error. The application number indicated on the document does not correspond with any record located in our database.

Thank you for your prompt reply regarding this matter.

Sincerely,

Deron A. Wheeler

UNITED STATES PATENT AND TRADEMARK OFFICE

OIPE IAP
JUL 16 2007
PATENT & TRADEMARK OFFICE

Commissioner for Patents
United States Patent and Trademark Office
P.O. Box 1450
Alexandria, VA 22313-1450
www.uspto.gov

BIRCH STEWART KOLASCH & BIRCH
PO BOX 747
FALLS CHURCH VA 22040-0747

COPY MAILED

JUN 15 2007

OFFICE OF PETITIONS

| | | |
|---|---|---|
| In re Application of | : | |
| Yashukiko Kachi | : | |
| Application No. 10/957,351 | : | DECISION ON PETITION |
| Filed: September 30, 2004 | : | TO WITHDRAW |
| Attorney Docket No. 0879-0460PUS1 | : | FROM RECORD |
| | : | |

This is a decision on the Request to Withdraw as attorney or agent of record under 37 C.F.R. § 1.36(b) filed November 21, 2006.

The request is **APPROVED**.

A grantable request to withdraw as attorney/agent of record must be signed by every attorney/agent seeking to withdraw or contain a clear indication that one attorney is signing on behalf of another/others. A request to withdraw will not be approved unless at least 30 (thirty) days would remain between the date of approval and the later of the expiration date of a time to file a response or the expiration date of the maximum time period which can be extended under 37 C.F.R. § 1.136(a).

The request was signed by Matthew E. Hinsch on behalf of all attorneys of record who are associated with customer No. 20350.

All attorneys/agents associated with the Customer Number 20350 have been withdrawn.

Applicant is reminded that there is no attorney of record at this time.

The request to change the correspondence of record is not acceptable as the requested correspondence address is not that of: (1) the first named signing inventor; or (2) an intervening assignee of the entire interest under 37 C.F.R 3.71. All future communications from the Office will be directed to the assignee of the entire interest at the first copied address below until otherwise properly notified by the applicant.

There are no pending Office actions at the present time.

Telephone inquiries concerning this decision should be directed to undersigned at 571-272-1642.

April M. Wise
Petitions Examiner
Office of Petitions

cc: AVIDIA RESEARCH INSTITUTE
2450 BAYSHORE PARKWAY
MOUNTAIN VIEW, CA 94043

cc: CHARLES K. SHOLTZ, PH.D.
AMGEN, INC.
1120 VETERANS BOULEVARD
SOUTH SAN FRANCISCO, CA 94080

OIPE
JUL 16 2007
PATENT & TRADEMARK OFFICE

UNITED STATES PATENT AND TRADEMARK OFFICE

UNITED STATES DEPARTMENT OF COMMERCE
United States Patent and Trademark Office
Address: COMMISSIONER FOR PATENTS
P.O. Box 1450
Alexandria, Virginia 22313-1450
www.uspto.gov

| APPLICATION NUMBER | FILING OR 371 (c) DATE | FIRST NAMED APPLICANT | ATTY. DOCKET NO./TITLE |
|---|---|---|---|
| 10/957,351 | 09/30/2004 | Willem P.C. Stemmer | 022013-001400US |

**CONFIRMATION NO. 6850**

*OC000000024218051*

20350
TOWNSEND AND TOWNSEND AND CREW, LLP
TWO EMBARCADERO CENTER
EIGHTH FLOOR
SAN FRANCISCO, CA 94111-3834

Date Mailed: 06/05/2007

## NOTICE REGARDING CHANGE OF POWER OF ATTORNEY

This is in response to the Power of Attorney filed 11/21/2006.

- The withdrawal as attorney in this application has been accepted. Future correspondence will be mailed to the new address of record. 37 CFR 1.33.

---

Office of Initial Patent Examination (571) 272-4000, or 1-800-PTO-9199
FORMER ATTORNEY/AGENT COPY

UNITED STATES PATENT AND TRADEMARK OFFICE

Commissioner for Patents
United States Patent and Trademark Office
P.O. Box 1450
Alexandria, VA 22313-1450
www.uspto.gov

BIRCH STEWART KOLASCH & BIRCH
PO BOX 747
FALLS CHURCH VA 22040-0747

COPY MAILED

JUL 25 2007

OFFICE OF PETITIONS

| | | |
|---|---|---|
| In re Application of | : | |
| Willem P.C. Stemmer, et al. | : | |
| Application No. 10/957,351 | : | DECISION ON PETITION |
| Filed: September 30, 2004 | : | TO WITHDRAW |
| Attorney Docket No. 022013-001400US | : | FROM RECORD |
| | : | |

This is a decision on the Request to Withdraw as attorney or agent of record under 37 C.F.R. § 1.36(b) filed November 21, 2006.

The request is **APPROVED**.

A grantable request to withdraw as attorney/agent of record must be signed by every attorney/agent seeking to withdraw or contain a clear indication that one attorney is signing on behalf of another/others. A request to withdraw will not be approved unless at least 30 (thirty) days would remain between the date of approval and the later of the expiration date of a time to file a response or the expiration date of the maximum time period which can be extended under 37 C.F.R. § 1.136(a).

The request was signed by Matthew E. Hinsch on behalf of all attorneys of record who are associated with customer No. 20350.

All attorneys/agents associated with the Customer Number 20350 have been withdrawn.

Applicant is reminded that there is no attorney of record at this time.

The request to change the correspondence of record is not acceptable as the requested correspondence address is not that of: (1) the first named signing inventor; or (2) an intervening assignee of the entire interest under 37 C.F.R 3.71. All future communications from the Office will be directed to the assignee of the entire interest at the first copied address below until otherwise properly notified by the applicant.

There is an outstanding Office action mailed June 19, 2007 that requires a reply by applicant.

Telephone inquiries concerning this decision should be directed to undersigned at 571-272-1642.

April M. Wise
Petitions Examiner
Office of Petitions

cc: AVIDIA RESEARCH INSTITUTE
2450 BAYSHORE PARKWAY
MOUNTAIN VIEW, CA 94043

cc: CHARLES K. SHOLTZ, PH.D.
AMGEN, INC.
1120 VETERANS BOULEVARD
SOUTH SAN FRANCISCO, CA 94080

UNITED STATES PATENT AND TRADEMARK OFFICE

Commissioner for Patents
United States Patent and Trademark Office
P.O. Box 1450
Alexandria, VA 22313-1450
www.uspto.gov

MAILED
FROM DIRECTORS OFFICE
MAR 16 2005
TECHNOLOGY CENTER 3600

RAYMOND N. ERVIN, LTD.
4238 NORTH ARLINGTON HEIGHTS ROAD
SUITE B-135
ARLINGTON HEIGHTS, IL 60004-1304

| | | |
|---|---|---|
| In re application of | : | **DECISION ON PETITION** |
| Andrew L. Berger et al. | : | **TO MAKE SPECIAL** |
| Application No. 10/957,404 | : | **(INFRINGEMENT)** |
| Filed: October 04, 2004 | : | |
| For: EXPANDABLE DRAWER ORGANIZER | | |

This is a decision on the petition under 37 C.F.R § 1.102(d) filed February 10, 2005 to make the above-identified application special.

The petition requests that the above-identified application be made special under the procedure set forth in M.P.E.P. § 708.02, item II: Infringement.

MPEP 708.02 states that a Petition to Make Special based on Infringement must have the following: (1) the appropriate petition fee under 37 CFR 1.17(i); (2) a statement by the assignee, applicant, or attorney alleging: (A) that there is an infringing device or product actually on the market or method in use; (B) that a rigid comparison of the alleged infringing device, product or method with the claims of the application has been made, and that, in his or her opinion, some of the claims are unquestionably infringed; and (C) that he or she has made a careful and thorough search of the prior art, or has good knowledge of the prior art, and has sent a copy of the references deemed most closely related to the subject matter encompassed by the claims.

The petition filed February 10, 2005 meets all of the requirements above and, therefore, the petition is **GRANTED**.

With regards to element 2(C) above, an Information Disclosure Statement was filed on December 28, 2004.

The examiner is directed (1) to make an interference search for possible interfering applications; (2) to promptly examine this application out of turn; and (3) if any interfering application is discovered, to examine such application simultaneously and state in the first official letter of such application that it is being taken out of turn because of a possible interference.

Petitioner is advised that this application will continue to be special, throughout its entire prosecution and pendency, including interference and appeal, if any, only if petitioner makes a prompt *bona fide* effort, in response to each Office action, to place the application in condition for allowance, even if it is necessary to conduct an interview with the examiner to accomplish this purpose.

Kenneth J. Dorner
Special Programs Examiner
Technology Center 3600
(703) 308-0866

KJD/slb: 03/04/05

UNITED STATES PATENT AND TRADEMARK OFFICE

Commissioner for Patents
United States Patent and Trademark Office
P.O. Box 1450
Alexandria, VA 22313-1450
www.uspto.gov

**BARNES AND THORNBURG LLP**
**P O BOX 2786**
**CHICAGO, IL 60690-2786**

**COPY MAILED**

MAR 2 1 2008

**OFFICE OF PETITIONS**

In re Application of
**BERGER**, et al.
Application No. 10/957,404
Filed: October 4, 2004
Attorney Docket No. **40405-99819**

DECISION ON PETITION
TO WITHDRAW
FROM RECORD

This is a decision on the Request to Withdraw as attorney or agent of record under 37 C.F.R. § 1.36(b), filed September 24, 2007.

The request is **NOT APPROVED** as moot.

A review of the file record indicates that the power of attorney to **BARNES AND THORNBURG LLP** has been revoked by the assignee of the patent application on November 27, 2007. Accordingly, the request to withdraw under 37 C.F.R. § 1.36(b) is moot.

All future communications from the Office will continue to be directed to the below-listed address until otherwise notified by applicant.

Telephone inquires concerning this decision should be directed to the undersigned at 571-272- 7253.

Monica A. Graves
Petitions Examiner
Office of Petitions

cc: **CARDINAL LAW GROUP, LLC**
**1603 ORRINGTON AVENUE, SUITE 2000**
**EVANSTON, IL 60201**

UNITED STATES PATENT AND TRADEMARK OFFICE

Commissioner for Patents
United States Patent and Trademark Office
P.O. Box 1450
Alexandria, VA 22313-1450
www.uspto.gov

CARDINAL LAW GROUP LLC
SUITE 2000
1603 ORRINGTON AVENUE
EVANSTON IL 60201

COPY MAILED
MAY 09 2008

| | | |
|---|---|---|
| In re Application of | : | |
| Berger, et al. | : | |
| Application No. 10/957,404 | : | ON PETITION |
| Filed: October 4, 2004 | : | |
| Attorney Docket No. 40405-99819 | : | |

This is a decision on the petition filed on March 24, 2008, pursuant to 37 CFR 1.137(b), to revive the above-identified application.

The petition is **GRANTED**.

The above-identified application became abandoned on September 28, 2007 for failure to timely file a proper reply to the final Office action mailed on June 27, 2007. This Office action set a shortened statutory period for reply of three (3) months. Applicants filed an RCE on March 10, 2008. However, this was beyond the statutory period for reply. The Office mailed a Notice of Abandonment on March 18, 2008.

With the instant petition, applicants paid the petition fee and made the proper statement of unintentional delay. The required reply in the form of an RCE was previously filed on March 10, 2008.

The matter is being forwarded to Group Art Unit 3637 for consideration of the RCE, filed March 10, 2008.

Telephone inquiries concerning this decision should be directed to the undersigned at (571)272-3207.

Cliff Congo
Petitions Attorney
Office of Petitions

UNITED STATES PATENT AND TRADEMARK OFFICE

Commissioner for Patents
United States Patent and Trademark Office
P.O. Box 1450
Alexandria, VA 22313-1450
www.uspto.gov

Gary F. Wang, Esq.
Suite 302
201 South Lake Avenue
Pasadena CA 91101

**COPY MAILED**

SEP 29 2005

**OFFICE OF PETITIONS**

In re Application of :
Luo et al :
Application No. 10/957,407 : DECISION ON PETITION
Filed: October 2, 2004 :
Attorney Docket No. 11005 :
Title of Invention: Bidirectional :
Promoters for Small RNA Expression :

This is a decision on the petition under 37 CFR §1.137(b), filed September 12, 2005, to revive the above-identified application.

This above-identified application became abandoned for failure to file a response to a Notice to File Missing Parts which was mailed on October 28, 2004. The Notice to File Missing Parts set an extendable two (2) month period for reply. No timely request for extension of time was obtained under the provisions of 37 CFR §1.136(a). Accordingly, this application became abandoned on December 29, 2004. A Notice of Abandonment was mailed on July 14, 2005.

The requirements for a grantable petition under 37 CFR §1.137(b) have been met. This petition is hereby **Granted**.

This application is being forwarded to the Office of Initial Patent Examination for further processing of the application.

Telephone inquiries concerning this matter should be directed to the undersigned at (571) 272-3215.

Charlema R. Grant

Charlema R. Grant
Petitions Attorney
Office of Petitions

UNITED STATES PATENT AND TRADEMARK OFFICE

Commissioner for Patents
United States Patent and Trademark Office
P.O. Box 1450
Alexandria, VA 22313-1450
www.uspto.gov

**RANDALL B. BATEMAN**
**BATEMAN IP LAW GROUP**
**8 EAST BROADWAY, SUITE 550**
**PO BOX 1319**
**SALT LAKE CITY UT 84110**

COPY MAILED

MAR 18 2008

OFFICE OF PETITIONS

| | | |
|---|---|---|
| In re Application of | : | |
| **SWENSON**, Weston | : | |
| Application No. 10/957,425 | : | DECISION ON PETITION |
| Filed: September 30, 2004 | : | TO WITHDRAW |
| Attorney Docket No. **2767.WSWE.NP** | : | FROM RECORD |

This is a decision on the Request to Withdraw as attorney or agent of record under 37 C.F.R. § 1.36(b), filed September 10, 2007.

The request is **NOT APPROVED**.

A grantable request to withdraw as attorney/agent of record must be signed by every attorney/agent seeking to withdraw or contain a clear indication that one attorney is signing on behalf of another/others. A request to withdraw will not be approved unless at least 30 (thirty) days would remain between the date of approval and the later of the expiration date of a time to file a response or the expiration date of the maximum time period which can be extended under 37 C.F.R. § 1.136(a).

The request cannot be approved because no reasons for withdrawal have been provided. The Office cannot, at this time, determine whether practitioner's request is one of the mandatory or permissive reasons enumerated in 37 CFR 10.40. Any subsequent requests must include reasons for withdrawal. Please note that there is a space provided for on PTO/SB/83 (Request to Withdraw as Attorney or Agent) to supply practitioner's reasons.

All future communications from the Office will continue to be directed to the above-listed address until otherwise notified by applicant.

Telephone inquiries concerning this decision should be directed to the undersigned at 571-272- 7253.

Monica A. Graves
Petitions Examiner
Office of Petitions

cc: **WESTON SWENSON**
**6445 S. 1260 EAST**
**PAYSON, UT 84651**

UNITED STATES PATENT AND TRADEMARK OFFICE

Commissioner for Patents
United States Patent and Trademark Office
P.O. Box 1450
Alexandria, VA 22313-1450
www.uspto.gov

BATEMAN IP LAW GROUP
P.O. BOX 1319
SALT LAKE CITY, UT 84110

COPY MAILED
SEP 18 2008

In re Application of :
SWENSON, Weston :
Application No. 10/957,425 : DECISION ON PETITION TO
Filed: September 30, 2004 : WITHDRAW FROM RECORD
Attorney Docket No. 2767.WSWE.NP :

This is a decision on the renewed Request to Withdraw as attorney or agent of record under 37 C.F.R. § 1.36(b), filed June 9, 2008.

The request is APPROVED.

A grantable request to withdraw as attorney/agent of record must be signed by every attorney/agent seeking to withdraw or contain a clear indication that one attorney is signing on behalf of another/others. A request to withdraw will not be approved unless at least 30 (thirty) days would remain between the date of approval and the later of the expiration date of a time to file a response or the expiration date of the maximum time period which can be extended under 37 C.F.R. § 1.136(a).

The request was signed by Randall Bateman, the sole attorney of record. Randall Bateman has been withdrawn as attorney or agent of record. Applicant is reminded that there is no attorney of record at this time.

All future correspondence will be directed to the sole named inventor Weston Swenson at the address indicated below.

The application became abandoned for failure to respond to the office action mailed July 27, 2007.

Telephone inquiries concerning this decision should be directed to the undersigned at 571-272-7253.

Monica A. Graves
Petitions Examiner
Office of Petitions

cc: WESTON SWENSON
645 SOUTH 1260 EAST
PAYSON, UT 84651

UNITED STATES PATENT AND TRADEMARK OFFICE

Commissioner for Patents
United States Patent and Trademark Office
P.O. Box 1450
Alexandria, VA 22313-1450
www.uspto.gov

REED SMITH LLP
P.O. BOX 488
PITTSBURGH PA 15230-0488

COPY MAILED

MAY 1 3 2005

OFFICE OF PETITIONS

| | | |
|---|---|---|
| In re Application of | : | |
| Iyer et al. | : | |
| Application No. 10/957,430 | : | LETTER |
| Filed: October 1, 2004 | : | |
| Attorney Docket No. 98-503-US-D | : | |

This is in response to the petition under 37 CFR 1.47(a), filed February 22, 2005.

In accordance with 37 CFR 1.63(d), petitioner submitted a copy of the executed declaration filed in Application No. 09/581,122, filed on June 15, 1998, of which the present filing is a divisional application. Additionally, petitioner submitted a copy of the decision, mailed on August 28, 2002, granting a petition under 37 CFR 1.47(a) in the prior application. As § 1.47(a) status was granted in the prior application, this application is hereby accorded § 1.47(a) status.

The present petition is **dismissed** as involving a moot issue because a petition is unnecessary to accord § 1.47(a) status in this application. Accordingly, the petition fee will be refunded to Deposit Account No. 18-0582.

As provided in 37 CFR 1.47(c), the Office is dispensing with the notice provision in this divisional application because the Office provided notice to the non-signing inventors regarding the § 1.47(a) status in the prior application.

This matter is being referred to the Office of Initial Patent Examination for further processing.

Telephone inquiries related to this decision may be directed to the undersigned at (571) 272-3211.

Christina Tartera Donnell

Christina Tartera Donnell
Senior Petitions Attorney
Office of Petitions

**UNITED STATES PATENT & TRADEMARK OFFICE**
**Washington, D.C. 20231**

## REQUEST FOR PATENT FEE REFUND

1 Date of Request: 5/12/05

2 Serial/Patent # 10/957,430

| | 3 Please refund the following fee(s): | 4 PAPER NUMBER | 5 DATE FILED | 6 AMOUNT |
|---|---|---|---|---|
| | Filing | | | $ |
| | Amendment | | | $ |
| | Extension of Time | | | $ |
| | Notice of Appeal/Appeal | | | $ |
| X | Petition | — | 2/22/05 | $ 200 |
| | Issue | | | $ |
| | Cert of Correction/Terminal Disc. | | | $ |
| | Maintenance | | | $ |
| | Assignment | | | $ |
| | Other | | | $ |

7 TOTAL AMOUNT OF REFUND $ 200

8 TO BE REFUNDED BY:

| | |
|---|---|
| | Treasury Check |
| X | Credit Deposit A/C #: |

9 1 8 -- 0 5 8 2

10 REASON:

| | |
|---|---|
| | Overpayment |
| | Duplicate Payment |
| X | No Fee Due (Explanation): |

No petition fee is required

11 REFUND REQUESTED BY: C. T. Donnell

TYPED/PRINTED NAME: C. T. Donnell TITLE: Pet. Atty

SIGNATURE: C. T. Donnell PHONE: 272-3211

OFFICE: 4700

**********

THIS SPACE RESERVED FOR FINANCE USE ONLY:

APPROVED: William Kelly DATE: 5/12/05

*Instructions for completion of this form appear on the back. After completion, attach white and yellow copies to the official file and mail or hand-carry to:*

**Office of Finance**
**Refund Branch**
**Crystal Park One, Room 802B**

FORM PTO 1577
(01/90)

OIPE JC161
FEB 2 2 2005
PATENT & TRADEMARK OFFICE

IN THE UNITED STATES PATENT AND TRADEMARK OFFICE

In re Application of:

**IYER et al.**

Serial No.: 10/957,430

Filed: October 1, 2004

Art Unit: 3736

Examiner: (Not yet assigned)

Atty. Docket No.: 98-503-US-D

**FETAL OXIMETRY SYSTEM AND SENSOR**

**MAIL STOP MISSING PARTS**
Commissioner for Patents
P.O. Box 1450
Alexandria, VA 22313-1450

**RESPONSE TO NOTICE TO FILE MISSING PARTS OF APPLICATION - FILING DATE GRANTED AND PETITION UNDER 37 C.F.R. § 1.47 (a)**

Dear Sir:

In response to the Notice To File Missing Parts Of Application - Filing Date Granted mailed December 21, 2004, a copy of which is enclosed, Applicant hereby submits the following:

CERTIFICATE OF MAILING UNDER 37 C.F.R. §1.8(a)

I hereby certify that this paper (along with any referred to as being attached or enclosed) is being

MAILED

☒ deposited with the United States Postal Service on January 18, 2005, with sufficient postage as first-class mail in an envelope addressed to MAIL STOP MISSING PARTS, Commissioner for Patents, PO Box 1450, Alexandria, VA 22313-1450

Jody L. Burtner

(Signature of person mailing paper or fee)

7. ☒ A check in the amount of $1,550.00 to cover the filing fees, surcharge and petition fee is enclosed.

8. ☐ A check in the amount of $ to cover the assignment recordation fee is enclosed.

9. ☐ The Director is authorized to charge $00 to cover the fee to Deposit Account No. 18-0582.

10. ☒ The Director is hereby authorized to charge payment of any additional fees associated with this communication or credit any overpayment to Deposit Account No. 18-0582. A duplicate copy of this paper is attached.

Respectfully submitted,

Dated: February 18, 2005

Cheryl L. Gastineau
Reg. No.39,469

REED SMITH LLP
P.O. Box 488
Pittsburgh, PA 15230-0488
(412) 288-4152

Agent for Applicants

UNITED STATES PATENT AND TRADEMARK OFFICE

Commissioner for Patents
United States Patent and Trademark Office
P.O. Box 1450
Alexandria, VA 22313-1450
www.uspto.gov

**BROOKS KUSHMAN P.C./LEAR CORPORATION**
**1000 TOWN CENTER**
**TWENTY-SECOND FLOOR**
**SOUTHFIELD MI 48075-1238**

COPY MAILED

MAR 24 2006

OFFICE OF PETITIONS

| | | |
|---|---|---|
| In re Application of | : | |
| Mark Farquhar et al | : | |
| Application No. 10/957,442 | : | ON PETITION |
| Filed: October 1, 2004 | : | |
| Attorney Docket No. LEAR04027PUS | : | |

This is a decision on the petition, filed March 23, 2006, under 37 CFR 1.313(c)(2) to withdraw the above-identified application from issue after payment of the issue fee.

The petition is **GRANTED.**

The above-identified application is withdrawn from issue for consideration of a submission under 37 CFR 1.114 (request for continued examination). See 37 CFR 1.313(c)(2).

**Petitioner is advised that the issue fee paid on January 17, 2006, in the above-identified application cannot be refunded. If, however, the above-identified application is again allowed, petitioner may request that it be applied towards the issue fee required by the new Notice of Allowance.**[1]

Telephone inquiries should be directed to the undersigned at (571) 272-3208.

The examiner of Technology Center AU 3636 will consider the request for continued examination under 37 CFR 1.114.

Karen Creasy

Karen Creasy
Petitions Examiner
Office of Petitions
Office of the Deputy Commissioner
for Patent Examination Policy

---

[1] The request to apply the issue fee to the new Notice may be satisfied by completing and returning the new Issue Fee Transmittal Form PTOL-85(b), which includes the following language thereon: "Commissioner for Patents is requested to apply the Issue Fee and Publication Fee (if any) or re-apply any previously paid issue fee to the application identified above." Petitioner is advised that, whether a fee is indicated as being due or not, the Issue Fee Transmittal Form **must** be completed and timely submitted to avoid abandonment. Note the language in bold text on the first page of the Notice of Allowance and Fee(s) Due (PTOL-85).

UNITED STATES PATENT AND TRADEMARK OFFICE

COMMISSIONER FOR PATENTS
UNITED STATES PATENT AND TRADEMARK OFFICE
P.O. BOX 1450
ALEXANDRIA, VA 22313-1450
www.uspto.gov

Paper No. _____

Date : March 24, 2006

TO : Director, Office of Patent Publication

FROM : Office of the Deputy Commissioner for Patent Examination Policy

COPY MAILED
MAR 24 2006
OFFICE OF PETITIONS

SUBJECT : Withdrawal from Issue of

Applicant(s) :Mark Farquhar et al
Application No. :10/957,442
Filed :October 1, 2004

The above-identified application has been assigned Patent No. 7,017,987 and an issue date of March 28, 2006.

It is hereby directed that this application be withdrawn from issue at the request of the applicant.

Do not refund the issue fee.

The following erratum should be published in the Official Gazette if the above-identified application is published in the OG of March 28, 2006:

> "All reference to Patent No. 7,017,987 to Mark Farquhar et al of Michigan for VEHICLE SEAT AND HEAD RESTRAINT ASSEMBLY appearing in the Official Gazette of March 28, 2006 should be deleted since no patent was granted."

Karen Creasy
Petitions Examiner
Office of Petitions
Office of the Deputy Commissioner
for Patent Examination Policy

cc: Paul Harrison, MDW-4B03,(FAX-273-5468)
Deneise Boyd, MDE-3D39 (FAX-273-5124)
Mary Louise McAskill, ST-8C15 (FAX 305-4372)
Niomi Farmer, ST-8C14 (FAX-305-4372)
Mary E. Johnson (Cookie), MDE-7C71 (FAX 273-0038
Duane Davis P/OPC MDE-7D89
Tamara Greene, ST-8C13

UNITED STATES PATENT AND TRADEMARK OFFICE

Commissioner for Patents
United States Patent and Trademark Office
P.O. Box 1450
Alexandria, VA 22313-1450
www.uspto.gov

BROOKS KUSHMAN PC/LEAR CORPORATION
1000 TOWN CENTER
TWENTY-SECOND FLOOR
SOUTHFIELD, MI 48075-1238

COPY MAILED
AUG 0 4 2006
OFFICE OF PETITIONS

| | |
|---|---|
| In re Application of | : |
| Mark Farquhar et al | : |
| Application No. 10/957,442 | : DECISION GRANTING PETITION |
| Filed: October 1, 2004 | : UNDER 37 CFR 1.313(c)(2) |
| Attorney Docket No. LEAR 04027 PUS | : |

This is a decision on the petition, filed August 2, 2006, under 37 CFR 1.313(c)(2) to withdraw the above-identified application from issue after payment of the issue fee.

The petition is **GRANTED**.

The above-identified application is withdrawn from issue for consideration of a submission under 37 CFR 1.114 (request for continued examination). See 37 CFR 1.313(c)(2).

***Petitioner is advised that the issue fee paid on May 15, 2006 in the above-identified application cannot be refunded. If, however, the above-identified application is again allowed, petitioner may request that it be applied towards the issue fee required by the new Notice of Allowance.***[1]

Telephone inquiries should be directed to the undersigned at (571) 272-3218.

This matter is being referred to Technology Center AU 3636 for processing of the request for continued examination under 37 CFR 1.114 and for consideration of the Information Disclosure Statement.

Frances Hicks
Petitions Examiner
Office of Petitions

C:\Documents and Settings\FHicks\My Documents\470\Aug9\957442.wpd

---

[1] *The request to apply the issue fee to the new Notice may be satisfied by completing and returning the new Part B – Fee(s) Transmittal Form (along with any balance due at the time of submission), which includes the following language thereon: "The Director of the USPTO is requested to apply the Issue Fee and Publication Fee (if any) or to re-apply any previously paid issue fee in the application identified above. Petitioner is advised that, whether a fee is indicated as being due or not, the Issue Fee Transmittal Form* ***must*** *be completed and timely submitted to avoid abandonment. Note the language in bold text on the first page of the Notice of Allowance and Fee(s) Due (PTOL-85).*

UNITED STATES PATENT AND TRADEMARK OFFICE

Commissioner for Patents
United States Patent and Trademark Office
P.O. Box 1450
Alexandria, VA 22313-1450
www.uspto.gov

WHIRLPOOL PATENTS COMPANY – MD 0750
500 RENAISSANCE DRIVE – SUITE 102
ST. JOSEPH, MI 49085

COPY MAILED

MAR 0 5 2008

OFFICE OF PETITIONS

In re Application of
Tremitchell L. Wright
Application No. 10/957,451
Filed: October 1, 2004
Attorney Docket No. US19984054-10

DECISION ON PETITION
UNDER 37 CFR 1.78(a)(6)

This is a decision on the petition filed September 20, 2007, which is being treated as a petition under 37 CFR 1.78(a)(6), to accept an unintentionally delayed claim under 35 U.S.C. § 119(e) for the benefit of priority to a prior-filed provisional application.

The petition is **DISMISSED.**

A petition under 37 CFR 1.78(a)(6) is only applicable to those applications filed on or after November 29, 2000. Further, the petition is appropriate only after expiration of the period specified in 37 CFR 1.78(a)(5)(ii) and must be filed during the pendency of the nonprovisional application. In addition, the petition must be accompanied by:

**(1)** the reference required by 35 U.S.C. § 119(e) and 37 CFR 1.78(a)(5)(i) to the prior-filed application, unless previously submitted;
**(2)** the surcharge set forth in § 1.17(t); and
**(3)** a statement that the entire delay between the date the claim was due under 37 CFR 1.78(a)(5)(ii) and the date the claim was filed was unintentional. The Director may require additional information where there is a question whether the delay was unintentional.

The petition does not comply with item (1).

Any nonprovisional application that directly claims the benefit of a provisional application under 35 U.S.C. § 119(e) must be filed within twelve months from the filing date of the provisional application. An application that itself directly claims the benefit of a provisional application should identify, but not specify the relationship to, the provisional application. If the subject nonprovisional application is not filed within the twelve month period, however, it still may claim benefit of the provisional application via an intermediate nonprovisional application under 35 U.S.C. § 120. The intermediate nonprovisional application must have been filed within twelve months from the filing date of the provisional application and the intermediate nonprovisional application must have claimed the benefit of the provisional application. Further, it must be clearly indicated that the intermediate nonprovisional application is claiming the benefit under 35 U.S.C. § 119(e) of the provisional application. This identification of the intermediate nonprovisional application is necessary so that the Office can determine whether the

intermediate nonprovisional application was filed within twelve months of the filing date of the provisional application, and thus, whether the benefit claim is proper.

Before the petition under 37 CFR § 1.78(a)(6) can be granted, a renewed petition and either an Application Data Sheet or an amendment (complying with the provisions of 37 CFR 1.121 and 37 CFR 1.76(b)(5)) to correct the above matters are required.

The file does not indicate a change of address has been submitted, although the address given on the petition differs from the address of record. If appropriate, a change of address should be filed in accordance with MPEP 601.03. A courtesy copy of this decision is being mailed to the address given on the petition; however, the Office will mail all future correspondence solely to the address of record.

Further correspondence with respect to this matter should be addressed as follows:

By mail: Mail Stop PETITIONS
Commissioner for Patents
Post Office Box 1450
Alexandria, VA 22313-1450

By hand: Customer Service Window
Mail Stop Petitions
Randolph Building
401 Dulany Street
Alexandria, VA 22314

By fax: (571) 273-8300
ATTN: Office of Petitions

Any questions concerning this matter may be directed to Irvin Dingle at (571) 272-3210.

David Bucci
Petitions Examiner
Office of Petitions

cc: Eileen T. Mathews
Roetzel & Andress
1375 E. Ninth Street
One Cleveland Center, Ninth Floor
Cleveland, OH 44114

UNITED STATES PATENT AND TRADEMARK OFFICE

Commissioner for Patents
United States Patent and Trademark Office
P.O. Box 1450
Alexandria, VA 22313-1450
www.uspto.gov

WHIRLPOOL PATENTS COMPANY – MD 0750
500 RENAISSANCE DRIVE – SUITE 102
ST. JOSEPH, MI 49085

**COPY MAILED**

MAY 0 8 2008

**OFFICE OF PETITIONS**

In re Application of
Tremitchell L. Wright et al
Application No. 10/957,451
Filed: October 1, 2004
Attorney Docket No. US19984054-10

DECISION ON PETITIONS
UNDER 37 CFR 1.78(a)(3) AND (a)(6)

This is a decision on the renewed petition filed April 4, 2008 and supplemented on May 2, 2008, under 37 CFR §§ 1.78(a)(3) and 1.78(a)(6) to accept an unintentionally delayed claim under 35 U.S.C. §§120 and 119(e) for the benefit of the prior-filed applications set forth in the concurrently filed Supplemental Application Data Sheet.

The petition is **GRANTED.**

A petition for acceptance of a claim for late priority under 37 CFR §§ 1.78(a)(3) and 1.78(a)(6) is only applicable to those applications filed on or after November 29, 2000. Further, the petition is appropriate only after the expiration of the period specified in 37 CFR §§ 1.78(a)(2)(ii) and 1.78(a)(5)(ii). In addition, the petition under 37 CFR §§ 1.78(a)(3) and 1.78(a)(6) must be accompanied by:

**(1)** the reference required by 35 U.S.C. §§ 120 and 119(e) and 37 CFR §§ 1.78(a)(2)(i) and 1.78(a)(5)(i) of the prior-filed application, unless previously submitted;
**(2)** the surcharge set forth in § 1.17(t); and
**(3)** a statement that the entire delay between the date the claim was due under 37 CFR §§ 1.78(a)(2)(ii) and 1.78(a)(5)(ii) and the date the claim was filed was unintentional. The Director may require additional information where there is a question whether the delay was unintentional.

Additionally, the instant nonprovisional application must be pending at the time of filing of the reference to the prior-filed provisional application as required by 37 CFR 1.78(a)(5)(ii). Further, the nonprovisional application claiming the benefit of the prior-filed provisional application must have been filed within twelve months of the filing date of the prior-filed provisional application. All the above requirements having been satisfied, the late claim for benefit of priority under 35 U.S.C. §§ 120 and 119(e) is accepted as being unintentionally delayed.

***The granting of the petition to accept the delayed benefit claim to the prior-filed applications under 37 CFR §§ 1.78(a)(3) and 1.78(a)(6) should not be construed as meaning that this application is entitled to the benefit of the filing date of the prior-filed applications. In order for this application to be entitled to the benefit of the prior-filed applications, all other requirements under 35 U.S.C. §§120 and 1.78(a)(1) and (a)(2) and under 35 U.S.C. §119(e) and 37 CFR 1.78(a)(4) and (a)(5) must be met. Similarly, the fact that the corrected Filing Receipt accompanying this decision on petition includes the prior-filed applications should not be construed as meaning that applicant is entitled to the claim for benefit of priority to the prior-filed applications noted thereon. Accordingly, the examiner will, in due course, consider this benefit claim and determine whether the application is entitled to the benefit of the earlier filing date.***

A corrected Filing Receipt, which includes the priority claim to the prior-filed applications, accompanies this decision on petition.

Any questions concerning this matter may be directed to Irvin Dingle at (571) 272-3210. All other inquiries concerning either the examination procedures or status of the application should be directed to the Technology Center.

This application is being forwarded to Technology Center Art Unit 1796 for consideration by the examiner of the claim under 35 U.S.C. § §120 and 119(e) of the prior-filed nonprovisional and provisional applications.

Karen Creasy

Karen Creasy
Petition Examiner
Office of Petitions

**ATTACHMENT** : Corrected Filing Receipt

UNITED STATES PATENT AND TRADEMARK OFFICE

UNITED STATES DEPARTMENT OF COMMERCE
United States Patent and Trademark Office
Address: COMMISSIONER FOR PATENTS
P.O. Box 1450
Alexandria, Virginia 22313-1450
www.uspto.gov

| APPLICATION NUMBER | FILING or 371(c) DATE | GRP ART UNIT | FIL FEE REC'D | ATTY.DOCKET.NO | TOT CLAIMS | IND CLAIMS |
|---|---|---|---|---|---|---|
| 10/957,451 | 10/01/2004 | 1796 | 1082 | US19984054-10 | 29 | 3 |

**CONFIRMATION NO. 8499**

**CORRECTED FILING RECEIPT**

173
WHIRLPOOL PATENTS COMPANY - MD 0750
500 RENAISSANCE DRIVE - SUITE 102
ST. JOSEPH, MI 49085

*OC000000029805474*

Date Mailed: 05/07/2008

Receipt is acknowledged of this non-provisional patent application. The application will be taken up for examination in due course. Applicant will be notified as to the results of the examination. Any correspondence concerning the application must include the following identification information: the U.S. APPLICATION NUMBER, FILING DATE, NAME OF APPLICANT, and TITLE OF INVENTION. Fees transmitted by check or draft are subject to collection. Please verify the accuracy of the data presented on this receipt. **If an error is noted on this Filing Receipt, please submit a written request for a Filing Receipt Correction. Please provide a copy of this Filing Receipt with the changes noted thereon. If you received a "Notice to File Missing Parts" for this application, please submit any corrections to this Filing Receipt with your reply to the Notice. When the USPTO processes the reply to the Notice, the USPTO will generate another Filing Receipt incorporating the requested corrections**

**Applicant(s)**

Tremitchell L. Wright, Elkhart, IN;
Daniel C. Conrad, Stevensville, MI;
Mark B. Kovich, St. Joseph, MI;

**Power of Attorney:**
Robert Rice--26574
Stephen Krefman--28631
Joel Van Winkle--37458
Clifton Green--41044
John Colligan--48240

**Domestic Priority data as claimed by applicant**

This application is a CON of 10/027,160 12/20/2001
which is a DIV of 09/520,653 03/07/2000 PAT 6,451,066
which is a DIV of 09/038,054 03/11/1998 PAT 6,045,588
which claims benefit of 60/045,072 04/29/1997

**Foreign Applications**

**If Required, Foreign Filing License Granted:** 11/16/2004
The country code and number of your priority application, to be used for filing abroad under the Paris Convention, is **US 10/957,451**
**Projected Publication Date:** Not Applicable
**Non-Publication Request:** No
**Early Publication Request:** No

**Title**

Non-aqueous washing apparatus and method

**Preliminary Class**

008

## PROTECTING YOUR INVENTION OUTSIDE THE UNITED STATES

Since the rights granted by a U.S. patent extend only throughout the territory of the United States and have no effect in a foreign country, an inventor who wishes patent protection in another country must apply for a patent in a specific country or in regional patent offices. Applicants may wish to consider the filing of an international application under the Patent Cooperation Treaty (PCT). An international (PCT) application generally has the same effect as a regular national patent application in each PCT-member country. The PCT process **simplifies** the filing of patent applications on the same invention in member countries, but **does not result** in a grant of "an international patent" and does not eliminate the need of applicants to file additional documents and fees in countries where patent protection is desired.

Almost every country has its own patent law, and a person desiring a patent in a particular country must make an application for patent in that country in accordance with its particular laws. Since the laws of many countries differ in various respects from the patent law of the United States, applicants are advised to seek guidance from specific foreign countries to ensure that patent rights are not lost prematurely.

Applicants also are advised that in the case of inventions made in the United States, the Director of the USPTO must issue a license before applicants can apply for a patent in a foreign country. The filing of a U.S. patent application serves as a request for a foreign filing license. The application's filing receipt contains further information and guidance as to the status of applicant's license for foreign filing.

Applicants may wish to consult the USPTO booklet, "General Information Concerning Patents" (specifically, the section entitled "Treaties and Foreign Patents") for more information on timeframes and deadlines for filing foreign patent applications. The guide is available either by contacting the USPTO Contact Center at 800-786-9199, or it can be viewed on the USPTO website at http://www.uspto.gov/web/offices/pac/doc/general/index.html.

For information on preventing theft of your intellectual property (patents, trademarks and copyrights), you may wish to consult the U.S. Government website, http://www.stopfakes.gov. Part of a Department of Commerce initiative, this website includes self-help "toolkits" giving innovators guidance on how to protect intellectual property in specific countries such as China, Korea and Mexico. For questions regarding patent enforcement issues, applicants may call the U.S. Government hotline at 1-866-999-HALT (1-866-999-4158).

## LICENSE FOR FOREIGN FILING UNDER

## Title 35, United States Code, Section 184

## Title 37, Code of Federal Regulations, 5.11 & 5.15

**GRANTED**

The applicant has been granted a license under 35 U.S.C. 184, if the phrase "IF REQUIRED, FOREIGN FILING LICENSE GRANTED" followed by a date appears on this form. Such licenses are issued in all applications where the conditions for issuance of a license have been met, regardless of whether or not a license may be required as

set forth in 37 CFR 5.15. The scope and limitations of this license are set forth in 37 CFR 5.15(a) unless an earlier license has been issued under 37 CFR 5.15(b). The license is subject to revocation upon written notification. The date indicated is the effective date of the license, unless an earlier license of similar scope has been granted under 37 CFR 5.13 or 5.14.

This license is to be retained by the licensee and may be used at any time on or after the effective date thereof unless it is revoked. This license is automatically transferred to any related applications(s) filed under 37 CFR 1.53(d). This license is not retroactive.

The grant of a license does not in any way lessen the responsibility of a licensee for the security of the subject matter as imposed by any Government contract or the provisions of existing laws relating to espionage and the national security or the export of technical data. Licensees should apprise themselves of current regulations especially with respect to certain countries, of other agencies, particularly the Office of Defense Trade Controls, Department of State (with respect to Arms, Munitions and Implements of War (22 CFR 121-128)); the Bureau of Industry and Security, Department of Commerce (15 CFR parts 730-774); the Office of Foreign AssetsControl, Department of Treasury (31 CFR Parts 500+) and the Department of Energy.

**NOT GRANTED**

No license under 35 U.S.C. 184 has been granted at this time, if the phrase "IF REQUIRED, FOREIGN FILING LICENSE GRANTED" DOES NOT appear on this form. Applicant may still petition for a license under 37 CFR 5.12, if a license is desired before the expiration of 6 months from the filing date of the application. If 6 months has lapsed from the filing date of this application and the licensee has not received any indication of a secrecy order under 35 U.S.C. 181, the licensee may foreign file the application pursuant to 37 CFR 5.15(b).

UNITED STATES PATENT AND TRADEMARK OFFICE

Commissioner for Patents
United States Patent and Trademark Office
P.O. Box 1450
Alexandria, VA 22313-1450
www.uspto.gov

FULBRIGHT & JAWORSKI, LLP
1301 MCKINNEY
SUITE 5100
HOUSTON, TX 77010-3095

MAILED

AUG 3 1 2009

OFFICE OF PETITIONS

In re Application of :
Gunnar Ekstrand et al :
Application No. 10/957,452 : ON PETITION
Filed: October 1, 2004 :
Attorney Docket No. HO-P02878US1

This is a decision on the petition, filed August 28, 2009 under 37 CFR 1.313(c)(2) to withdraw the above-identified application from issue after payment of the issue fee.

The petition is **GRANTED**.

The above-identified application is withdrawn from issue for consideration of a submission under 37 CFR 1.114 (request for continued examination). See 37 CFR 1.313(c)(2).

**Petitioner is advised that the issue fee paid on August 7, 2009 in the above-identified application cannot be refunded. If, however, the above-identified application is again allowed, petitioner may request that it be applied towards the issue fee required by the new Notice of Allowance.**[1]

Telephone inquiries should be directed to Irvin Dingle at (571) 272-3210.

This matter is being referred to Technology Center AU 1797 for processing of the request for continued examination under 37 CFR 1.114 and for consideration of the concurrently filed amendment.

/Irvin Dingle/
Irvin Dingle
Petitions Examiner
Office of Petitions

---

[1] The request to apply the issue fee to the new Notice may be satisfied by completing and returning the new Issue Fee Transmittal Form PTOL-85(b), which includes the following language thereon: Commissioner for Patents is requested to apply the Issue Fee and Publication Fee (if any) or re-apply any previously paid issue fee to the application identified above. Petitioner is advised that, whether a fee is indicated as being due or not, the Issue Fee Transmittal Form **must** be completed and timely submitted to avoid abandonment. Note the language in bold text on the first page of the Notice of Allowance and Fee(s) Due (PTOL-85).

UNITED STATES PATENT AND TRADEMARK OFFICE

UNITED STATES DEPARTMENT OF COMMERCE
United States Patent and Trademark Office
Address: COMMISSIONER FOR PATENTS
P.O. Box 1450
Alexandria, Virginia 22313-1450
www.uspto.gov

PITNEY BOWES INC.
35 WATERVIEW DRIVE
MSC 26-22
SHELTON, CT 06484-3000

Mail Date: 04/20/2010

| | | |
|---|---|---|
| **Applicant** | : Jean-Hiram Coffy | : DECISION ON REQUEST FOR |
| **Patent Number** | : 7609890 | : RECALCULATION of PATENT |
| **Issue Date** | : 10/27/2009 | : TERM ADJUSTMENT IN VIEW |
| **Appliction No** | : 10/957,459 | : OF WYETH AND NOTICE OF INTENT TO |
| **Filed** | : 09/30/2004 | : ISSUE CERTIFICATE OF CORRECTION |
| | | : |

The Request for Recalculation is **GRANTED** to the extent indicated.

The patent term adjustment has been determined to be **1378** days. The USPTO will *sua sponte* issue a certificate of correction reflecting the amount of PTA days determined by the recalculation.

Prior to the issuance of the certificate of correction, the USPTO will afford patentee an opportunity to be heard and request reconsideration. Accordingly, patentee has **one month or thirty (30) days**, whichever is longer, to file a request for reconsideration of this patent term adjustment calculation. See 35 U.S.C. 154(b)(3)(B)(ii) and 37 CFR 1.322(a)(4). No extensions of time will be granted under 37 CFR 1.136.

Patentee should use document code PET.OP if electronically filing a request for reconsideration of this patent term adjustment calculation. The patentee must also include the information required by 37 CFR 1.705(b)(2) and the fee required by 37 CFR 1.18(e). If patentee does not file a timely request for reconsideration of this patent term adjustment calculation including the information required by 37 CFR 1.705(b)(2) and the fee required by 37 CFR 1.18(e), the USPTO will issue a certificate of correction reflecting the PTA determination noted above.

Patentee should be aware that in order to preserve the right to review in the United States District Court for the District of Columbia of the USPTO patent term adjustment determination, patentee must ensure that he or she also take the steps required under 35 U.S.C. 154(b)(4)(A) in a timely manner. Nothing in the request for recalculation should be construed as providing an alternative time frame for commencing a civil action under 35 U.S.C. 154(b)(4)(A).

Any questions concerning this decision should be directed to the Office of Patent Legal Administration at 571-272-7702.

UNITED STATES PATENT AND TRADEMARK OFFICE

Commissioner for Patents
United States Patent and Trademark Office
P.O. Box 1450
Alexandria, VA 22313-1450
www.uspto.gov

COPY MAILED

SEP 19 2007

OFFICE OF PETITIONS

**WARNER NORCROSS & JUDD LLP**
**900 FIFTH THIRD CENTER**
**111 LYON STREET, N.W.**
**GRAND RAPIDS MI 49503-2487**

| | | |
|---|---|---|
| In re Application of | : | |
| Kris D. DZIESINSKI et al. | : | |
| Application No. 10/957,466 | : | DECISION ON PETITION |
| Filed: October 01, 2004 | : | |
| Attorney Docket No. 82990.84165-002 | : | |

This is a decision on the petition under the unintentional provisions of 37 CFR 1.137(b), filed August 29, 2007, to revive the above-identified application.

The petition is **GRANTED**.

The application became abandoned for failure to timely pay the issue fee on or before August 14, 2007, as required by the Notice of Allowance and Fee(s) Due, mailed May 14, 2007, which set a statutory period for reply of three (3) months. Accordingly, the application became abandoned on August 15, 2007. A Notice of Abandonment was mailed on September 06, 2007.

The petition satisfies the requirements of 37 CFR 1.137(b) in that petitioner has supplied (1) the reply in the form of payment of the issue fee of $1400 and the publication fee of $300, (2) the petition fee of $1500; and (3) a proper statement of unintentional delay.

Telephone inquiries concerning this decision should be directed to Tredelle Jackson at (571) 272-2783.

This application is being referred to Publishing Division for processing into a patent.

David Bucci
Petitions Examiner
Office of Petitions

UNITED STATES PATENT AND TRADEMARK OFFICE

Commissioner for Patents
United States Patent and Trademark Office
P.O. Box 1450
Alexandria, VA 22313-1450
www.uspto.gov

WHIRLPOOL PATENTS COMPANY - MD 0750
500 RENAISSANCE DRIVE - SUITE 102
ST. JOSEPH, MI 49085

**COPY MAILED**

MAY 2 7 2008

**OFFICE OF PETITIONS**

| | | |
|---|---|---|
| In re Application of | : | |
| Tremitchell L. Wright, et. al. | : | |
| Application No. 10/957,486 | : | DECISION ON PETITION |
| Filed: October 1, 2004 | : | UNDER 37 CFR 1.78(a)(6) |
| Attorney Docket No. US19984054-9 | : | |

This is a decision on the petition under 37 CFR 1.78(a)(6), filed September 20, 2007, April 11, 2008 and supplemented on May 5, 2008, to accept an unintentionally delayed claim under 35 U.S.C. § 119(e) for the benefit of priority to a prior-filed provisional application.

The petition is **DISMISSED.**

A petition under 37 CFR 1.78(a)(6) is only applicable to those applications filed on or after November 29, 2000. Further, the petition is appropriate only after expiration of the period specified in 37 CFR 1.78(a)(5)(ii) and must be filed during the pendency of the nonprovisional application. In addition, the petition must be accompanied by:

**(1)** the reference required by 35 U.S.C. § 119(e) and 37 CFR 1.78(a)(5)(i) to the prior-filed application, unless previously submitted;
**(2)** the surcharge set forth in § 1.17(t); and
**(3)** a statement that the entire delay between the date the claim was due under 37 CFR 1.78(a)(5)(ii) and the date the claim was filed was unintentional. The Director may require additional information where there is a question whether the delay was unintentional.

The petition lacks item (1) above.

Intermediate nonprovisional Application No. 10/027,160 was filed on December 20, 2001, which was filed more than twelve months of provisional Application No. 60/045,072 filed April 27, 1997. Also, provisional Application No. 60/045,072 was expired before the filing of Application No. 10/027,160; therefore, as copendency fails to exist between these two applications, the instant application (10/957,486) cannot claim benefit to provisional Application No. 60/045,072.

Additionally, it is not apparent whether the statement of unintentional delay was signed by a person who would have been in a position of knowing that the entire delay was unintentional. Nevertheless, in accordance with 37 CFR 10.18, the statement is accepted as constituting a certification of unintentional delay. However, in the event that petitioner has no knowledge that the delay was unintentional, petitioner must make such an inquiry to ascertain that, in fact, the delay was unintentional. If petitioner discovers that the delay was intentional, petitioner must so notify the Office.

Further, there is no indication that the person signing the instant petition was ever given a power of attorney or authorization of agent to prosecute the above-identified application. However, in accordance with 37 CFR 1.34(a), the signature of Eileen T. Mathews appearing on the petition shall constitute a representation to the United States Patent and Trademark Office that he/she is authorized to represent the particular party in whose behalf he/she acts. If petitioner desires to receive future correspondence regarding this application, the appropriate power of attorney or authorization of agent must be submitted. A courtesy copy of this decision is being mailed to petitioner. Nevertheless, all future correspondence will be directed solely to the address of record until otherwise instructed.

Further correspondence with respect to this matter should be addressed as follows:

By mail: Mail Stop PETITIONS
Commissioner for Patents
Post Office Box 1450
Alexandria, VA 22313-1450

By hand: Customer Service Window
Mail Stop Petitions
Randolph Building
401 Dulany Street
Alexandria, VA 22314

By fax: (571) 273-8300
ATTN: Office of Petitions

Any questions concerning this matter may be directed to the undersigned at (571) 272-3226.

Andrea Smith
Petitions Examiner
Office of Petitions

cc: Eileen Mathews
Benesch Friedlander Coplan & Aronoff, LLP
2300 BP Tower
200 Public Square
Cleveland, OH 44114

UNITED STATES PATENT AND TRADEMARK OFFICE

Commissioner for Patents
United States Patent and Trademark Office
P.O. Box 1450
Alexandria, VA 22313-1450
www.uspto.gov

WHIRLPOOL PATENTS COMPANY - MD 0750
500 RENAISSANCE DRIVE - SUITE 102
ST. JOSEPH, MI 49085

**COPY MAILED**

MAR 1 1 2009

**OFFICE OF PETITIONS**

In re Application of
Tremitchell L. Wright, et. al.
Application No. 10/957,486
Filed: October 1, 2004
Attorney Docket No. US199845054-9

DECISION ON PETITIONS
UNDER 37 CFR 1.78(a)(3) AND (a)(6)

This is a decision on the renewed petitions under 37 CFR §§ 1.78(a)(3) and 1.78(a)(6), filed June 26, 2008, to accept an unintentionally delayed claim under 35 U.S.C. §§120 and 119(e) for the benefit of the prior-filed applications set forth in the concurrently filed Application Data Sheet (ADS).

The instant petition is not signed by an attorney of record. However, in accordance with 37 CFR 1.34(a), the signature of Eileen Mathews appearing on the petition shall constitute a representation to the United States Patent and Trademark Office that she is authorized to represent the particular party on whose behalf she acts.

37 CFR §§ 1.78(a)(3) and 1.78(a)(6) require a statement that the entire delay between the date the claim was due under 37 CFR §§ 1.78(a)(2)(ii) and 1.78(a)(5)(ii) and the date the claim was filed was unintentional. Since the statement appearing in the petition filed on September 20, 2007 varies from the required language, the statement is being construed as the statement required by 37 CFR §§1.78(a)(3) and 1.78(a))(6). If this is not a correct reading of the statement appearing in the petition, petitioner should promptly notify the Office.

The petitions are **GRANTED**.

A petition for acceptance of a claim for late priority under 37 CFR §§ 1.78(a)(3) and 1.78(a)(6) is only applicable to those applications filed on or after November 29, 2000. Further, the petition is appropriate only after the expiration of the period specified in 37 CFR §§ 1.78(a)(2)(ii) and 1.78(a)(5)(ii). In addition, the petition under 37 CFR §§ 1.78(a)(3) and 1.78(a)(6) must be accompanied by:

**(1)** the reference required by 35 U.S.C. §§ 120 and 119(e) and 37 CFR §§ 1.78(a)(2)(i) and 1.78(a)(5)(i) of the prior-filed application, unless previously submitted;
**(2)** the surcharge set forth in § 1.17(t); and
**(3)** a statement that the entire delay between the date the claim was due under 37 CFR §§ 1.78(a)(2)(ii) and 1.78(a)(5)(ii) and the date the claim was filed was unintentional. The Director may require additional information where there is a question whether the delay was unintentional.

Additionally, the instant nonprovisional application must be pending at the time of filing of the reference to the prior-filed provisional application as required by 37 CFR 1.78(a)(5)(ii). Further, the nonprovisional application claiming the benefit of the prior-filed provisional application must have been filed within twelve months of the filing date of the prior-filed provisional application.

All the above requirements having been satisfied, the late claim for benefit of priority under 35 U.S.C. §§ 120 and 119(e) is accepted as being unintentionally delayed.

***The granting of the petition to accept the delayed benefit claim to the prior-filed applications under 37 CFR §§ 1.78(a)(3) and 1.78(a)(6) should not be construed as meaning that this application is entitled to the benefit of the filing date of the prior-filed applications. In order for this application to be entitled to the benefit of the prior-filed applications, all other requirements under 35 U.S.C. §§120 and 1.78(a)(1) and (a)(2) and under 35 U.S.C. §119(e) and 37 CFR 1.78(a)(4) and (a)(5) must be met. Similarly, the fact that the corrected Filing Receipt accompanying this decision on petition includes the prior-filed applications should not be construed as meaning that applicant is entitled to the claim for benefit of priority to the prior-filed applications noted thereon. Accordingly, the examiner will, in due course, consider this benefit claim and determine whether the application is entitled to the benefit of the earlier filing date.***

A corrected Filing Receipt, which includes the priority claim to the prior-filed applications, accompanies this decision on petition.

This application is being forwarded to Technology Center Art Unit 1796 for consideration by the examiner of the claim under 35 U.S.C. § §120 and 119(e) of the prior-filed nonprovisional and provisional applications.

Any questions concerning this matter may be directed to the undersigned at (571) 272-3226. All other inquiries concerning either the examination procedures or status of the application should be directed to the Technology Center.

Andrea Smith
Petitions Examiner
Office of Petitions

**ATTACHMENT**: Corrected Filing Receipt

UNITED STATES PATENT AND TRADEMARK OFFICE

UNITED STATES DEPARTMENT OF COMMERCE
United States Patent and Trademark Office
Address: COMMISSIONER FOR PATENTS
P.O. Box 1450
Alexandria, Virginia 22313-1450
www.uspto.gov

| APPLICATION NUMBER | FILING or 371(c) DATE | GRP ART UNIT | FIL FEE REC'D | ATTY.DOCKET.NO | TOT CLAIMS | IND CLAIMS |
|---|---|---|---|---|---|---|
| 10/957,486 | 10/01/2004 | 1796 | 1596 | US19984054-9 | 55 | 5 |

**CONFIRMATION NO. 8852**

**CORRECTED FILING RECEIPT**

173
WHIRLPOOL PATENTS COMPANY - MD 0750
500 RENAISSANCE DRIVE - SUITE 102
ST. JOSEPH, MI 49085

*OC000000034918770*

Date Mailed: 03/10/2009

Receipt is acknowledged of this non-provisional patent application. The application will be taken up for examination in due course. Applicant will be notified as to the results of the examination. Any correspondence concerning the application must include the following identification information: the U.S. APPLICATION NUMBER, FILING DATE, NAME OF APPLICANT, and TITLE OF INVENTION. Fees transmitted by check or draft are subject to collection. Please verify the accuracy of the data presented on this receipt. **If an error is noted on this Filing Receipt, please submit a written request for a Filing Receipt Correction. Please provide a copy of this Filing Receipt with the changes noted thereon. If you received a "Notice to File Missing Parts" for this application, please submit any corrections to this Filing Receipt with your reply to the Notice. When the USPTO processes the reply to the Notice, the USPTO will generate another Filing Receipt incorporating the requested corrections**

**Applicant(s)**

Tremitchell L. Wright, Elkhart, IN;
Daniel C. Conrad, Stevensville, MI;
Mark B. Kovich, St. Joseph, MI;

**Power of Attorney:**
Robert Rice--26574
Stephen Krefman--28631
Joel Van Winkle--37458
Clifton Green--41044
John Colligan--48240

**Domestic Priority data as claimed by applicant**

This application is a CON of 10/027,160 12/20/2001 ABN
which is a DIV of 09/520,653 03/07/2000 PAT 6,451,066
which is a DIV of 09/038,054 03/11/1998 PAT 6,045,588
which claims benefit of 60/045,072 04/29/1997

**Foreign Applications**

**If Required, Foreign Filing License Granted:** 11/16/2004
The country code and number of your priority application, to be used for filing abroad under the Paris Convention, is **US 10/957,486**
**Projected Publication Date:** Not Applicable
**Non-Publication Request:** No
**Early Publication Request:** No

**Title**

Non-aqueous washing apparatus and method

**Preliminary Class**

008

## PROTECTING YOUR INVENTION OUTSIDE THE UNITED STATES

Since the rights granted by a U.S. patent extend only throughout the territory of the United States and have no effect in a foreign country, an inventor who wishes patent protection in another country must apply for a patent in a specific country or in regional patent offices. Applicants may wish to consider the filing of an international application under the Patent Cooperation Treaty (PCT). An international (PCT) application generally has the same effect as a regular national patent application in each PCT-member country. The PCT process **simplifies** the filing of patent applications on the same invention in member countries, but **does not result** in a grant of "an international patent" and does not eliminate the need of applicants to file additional documents and fees in countries where patent protection is desired.

Almost every country has its own patent law, and a person desiring a patent in a particular country must make an application for patent in that country in accordance with its particular laws. Since the laws of many countries differ in various respects from the patent law of the United States, applicants are advised to seek guidance from specific foreign countries to ensure that patent rights are not lost prematurely.

Applicants also are advised that in the case of inventions made in the United States, the Director of the USPTO must issue a license before applicants can apply for a patent in a foreign country. The filing of a U.S. patent application serves as a request for a foreign filing license. The application's filing receipt contains further information and guidance as to the status of applicant's license for foreign filing.

Applicants may wish to consult the USPTO booklet, "General Information Concerning Patents" (specifically, the section entitled "Treaties and Foreign Patents") for more information on timeframes and deadlines for filing foreign patent applications. The guide is available either by contacting the USPTO Contact Center at 800-786-9199, or it can be viewed on the USPTO website at http://www.uspto.gov/web/offices/pac/doc/general/index.html.

For information on preventing theft of your intellectual property (patents, trademarks and copyrights), you may wish to consult the U.S. Government website, http://www.stopfakes.gov. Part of a Department of Commerce initiative, this website includes self-help "toolkits" giving innovators guidance on how to protect intellectual property in specific countries such as China, Korea and Mexico. For questions regarding patent enforcement issues, applicants may call the U.S. Government hotline at 1-866-999-HALT (1-866-999-4158).

## LICENSE FOR FOREIGN FILING UNDER

## Title 35, United States Code, Section 184

## Title 37, Code of Federal Regulations, 5.11 & 5.15

**GRANTED**

The applicant has been granted a license under 35 U.S.C. 184, if the phrase "IF REQUIRED, FOREIGN FILING LICENSE GRANTED" followed by a date appears on this form. Such licenses are issued in all applications where the conditions for issuance of a license have been met, regardless of whether or not a license may be required as

set forth in 37 CFR 5.15. The scope and limitations of this license are set forth in 37 CFR 5.15(a) unless an earlier license has been issued under 37 CFR 5.15(b). The license is subject to revocation upon written notification. The date indicated is the effective date of the license, unless an earlier license of similar scope has been granted under 37 CFR 5.13 or 5.14.

This license is to be retained by the licensee and may be used at any time on or after the effective date thereof unless it is revoked. This license is automatically transferred to any related applications(s) filed under 37 CFR 1.53(d). This license is not retroactive.

The grant of a license does not in any way lessen the responsibility of a licensee for the security of the subject matter as imposed by any Government contract or the provisions of existing laws relating to espionage and the national security or the export of technical data. Licensees should apprise themselves of current regulations especially with respect to certain countries, of other agencies, particularly the Office of Defense Trade Controls, Department of State (with respect to Arms, Munitions and Implements of War (22 CFR 121-128)); the Bureau of Industry and Security, Department of Commerce (15 CFR parts 730-774); the Office of Foreign AssetsControl, Department of Treasury (31 CFR Parts 500+) and the Department of Energy.

**NOT GRANTED**

No license under 35 U.S.C. 184 has been granted at this time, if the phrase "IF REQUIRED, FOREIGN FILING LICENSE GRANTED" DOES NOT appear on this form. Applicant may still petition for a license under 37 CFR 5.12, if a license is desired before the expiration of 6 months from the filing date of the application. If 6 months has lapsed from the filing date of this application and the licensee has not received any indication of a secrecy order under 35 U.S.C. 181, the licensee may foreign file the application pursuant to 37 CFR 5.15(b).

UNITED STATES PATENT AND TRADEMARK OFFICE

0 3 MAR 2010

Commissioner for Patents
United States Patent and Trademark Office
P.O. Box 1450
Alexandria, VA 22313-1450
www.uspto.gov

SCULLY SCOTT MURPHY & PRESSER, PC
400 GARDEN CITY PLAZA
SUITE 300
GARDEN CITY NY 11530

| | |
|---|---|
| In re Application of | : |
| GERONI, et al. | : |
| Application No. 10/957,507 | : DECISION ON PETITION |
| Filed: October 01, 2004 | : UNDER 37 CFR 1.78(a)(3) |
| Attorney Docket No. 17704 | : |

This is a decision on the petition under 37 CFR 1.78(a)(3), filed 08 December 2009, to accept an unintentionally delayed claim under 35 U.S.C. § 120 for the benefit of priority to the prior-filed international application set forth in the amendment filed concurrently with the instant petition. Applicant's present petition is identified as a "petition under 37 CFR 1.78(e)" seeking to claim foreign priority. Because applicant seeks to obtain priority to European patent application number 020762407 through international application number PCT/EP03/03192, the petition is being considered pursuant to 37 CFR 1.78(a)(3).

The petition under 37 CFR 1.78(a)(3) is DISMISSED without prejudice.

The present nonprovisional application was filed after November 29, 2000, and the claim herein for the benefit of priority to the prior-filed applications is submitted after expiration of the period specified in 37 CFR 1.78(a)(2)(ii). Therefore, this is a proper petition under 37 CFR 1.78(a)(3).

A petition for acceptance of a claim for late priority under 37 CFR 1.78(a)(3) is only applicable to those applications filed on or after November 29, 2000. Further, the petition is appropriate only after the expiration of the period specified in 37 CFR 1.78(a)(2)(ii). In addition, the petition under 37 CFR 1.78(a)(3) must be accompanied by:

(1) the reference required by 35 U.S.C. § 120 and 37 CFR 1.78(a)(2)(i) of the prior-filed application, unless previously submitted;

(2) the surcharge set forth in § 1.17(t); and

(3) a statement that the entire delay between the date the claim was due under 37 CFR 1.78(a)(2)(ii) and the date the claim was filed was unintentional. The Director may

require additional information where there is a question whether the delay was unintentional.

The petition fails to comply with item (1) above.

37 CFR 1.78(a)(2)(i) requires that any nonprovisional application claiming the benefit of one or more prior-filed copending nonprovisional or international applications must contain or be amended to contain a reference to each such prior-filed application, identifying it by application number (consisting of the series code and serial number) and indicating the relationship of the applications. The relationship between the applications is whether the subject application is a continuation, divisional, or continuation-in-part of a prior-filed nonprovisional application. Here, the amendment submitted with the present petition indicates that "this application is based upon and claims the benefit of International application, Serial No. PCT/EP03/03192..." The amendment fails to state the proper relationship of the present application to International Application No. PCT/EP03/03192 filed March 17, 2003. (See 37 CFR 1.78(a)(2)(i)) Therefore, the amendment fails to comply with the provisions of 37 CFR 1.78(a)(2)(i) and is therefore unacceptable.

Therefore, before the petition under 37 CFR § 1.78(a)(3) can be granted, a renewed petition and either an Application Data Sheet (37 CFR 1.76(a)(5)) or a proper amendment (complying with the provisions of 37 CFR 1.121) to correct the above matters are required.

Any further correspondence with respect to this matter may be filed electronically via EFS-Web selecting the document description "Petition for review and processing by the PCT Legal Office" or by mail addressed to Mail Stop PCT, Commissioner for Patents, Office of PCT Legal Administration, P.O. Box 1450, Alexandria, Virginia 22313-1450, with the contents of the letter marked to the attention of the Office of PCT Legal Administration.

Any questions concerning this matter may be directed to Derek A. Putonen at (571) 272-3294.

Boris Milef
Senior Legal Examiner
Office of PCT Legal Administration

UNITED STATES PATENT AND TRADEMARK OFFICE

Commissioner for Patents
United States Patent and Trademark Office
P.O. Box 1450
Alexandria, VA 22313-1450
www.uspto.gov

09 JUL 2010

SCULLY SCOTT MURPHY & PRESSER, PC
400 GARDEN CITY PLAZA
SUITE 300
GARDEN CITY NY 11530

| | |
|---|---|
| In re Application of | : |
| GERONI, et al. | : |
| Application No. 10/957,507 | : DECISION ON PETITION |
| Filed: October 01, 2004 | : UNDER 37 CFR 1.78(a)(3) |
| Attorney Docket No. 17704 | : |

This is a decision on the "renewed petition under 37 CFR 1.78(e)" filed 08 April 2010, to accept a claim for foreign priority to prior-filed international application PCT/EP03/03192.

Applicant is advised that there is no petition procedure under 37 CFR 1.78 (e). Petitions for acceptance of delayed priority claims arise under 37 CFR 1.78 (a)(3) and (a)(6) (for domestic benefits claims) and 37 CFR 1.55 (c) for foreign priority claims. Because international application PCT/EP03/03192 was filed more than 12 months before the filing date of the instant application (see 35 U.S.C. 119 (a) and 365 (a)) and further because applicant seeks to add claim of foreign priority to a European application filed in 2002, the present renewed petition has been treated as a petition under 37 CFR 1.78 (a)(3).

The renewed petition under 37 CFR 1.78(a)(3) is <u>DISMISSED</u> without prejudice.

The present nonprovisional application was filed after November 29, 2000, and the claim herein for the benefit of priority to the prior-filed applications is submitted after expiration of the period specified in 37 CFR 1.78(a)(2)(ii). Therefore, this is a proper petition under 37 CFR 1.78(a)(3).

A petition for acceptance of a claim for late priority under 37 CFR 1.78(a)(3) is only applicable to those applications filed on or after November 29, 2000. Further, the petition is appropriate only after the expiration of the period specified in 37 CFR 1.78(a)(2)(ii). In addition, the petition under 37 CFR 1.78(a)(3) must be accompanied by:

(1) the reference required by 35 U.S.C. § 120 and 37 CFR 1.78(a)(2)(i) of the prior-filed application, unless previously submitted;

(2) the surcharge set forth in § 1.17(t); and

(3) a statement that the entire delay between the date the claim was due under 37 CFR 1.78(a)(2)(ii) and the date the claim was filed was unintentional. The Director may

require additional information where there is a question whether the delay was unintentional.

The petition fails to comply with item (1) above.

37 CFR 1.78(a)(2)(i) requires that any nonprovisional application claiming the benefit of one or more prior-filed copending nonprovisional or international applications must contain or be amended to contain a reference to each such prior-filed application, identifying it by application number (consisting of the series code and serial number) and indicating the relationship of the applications. The relationship between the applications is whether the subject application is a continuation, divisional, or continuation-in-part of a prior-filed nonprovisional application. Here, the amendment submitted with the present petition indicates that "this application is a national stage filing, under 35 U.S.C. §371, of International application, Serial No. PCT/EP03/03192..." However, the present application is a filing under 35 U.S.C. 111, not a U.S. national stage filing under 35 U.S.C. 371. As such, the amendment fails to state the proper relationship of the present application to International Application No. PCT/EP03/03192 filed March 17, 2003. (See 37 CFR 1.78(a)(2)(i)) Therefore, the amendment fails to comply with the provisions of 37 CFR 1.78(a)(2)(i) and is therefore unacceptable.

Therefore, before the petition under 37 CFR § 1.78(a)(3) can be granted, a renewed petition and either an Application Data Sheet (37 CFR 1.76(a)(5)) or a proper amendment (complying with the provisions of 37 CFR 1.121) to correct the above matters are required.

Any further correspondence with respect to this matter may be filed electronically via EFS-Web selecting the document description "Petition for review and processing by the PCT Legal Office" or by mail addressed to Mail Stop PCT, Commissioner for Patents, Office of PCT Legal Administration, P.O. Box 1450, Alexandria, Virginia 22313-1450, with the contents of the letter marked to the attention of the Office of PCT Legal Administration.

Any questions concerning this matter may be directed to Derek A. Putonen at (571) 272-3294.

Boris Milef
Senior Legal Examiner
Office of PCT Legal Administration

UNITED STATES PATENT AND TRADEMARK OFFICE

COMMISSIONER FOR PATENTS
UNITED STATES PATENT AND TRADEMARK OFFICE
P.O. BOX 1450
ALEXANDRIA, VA 22313-1450
www.uspto.gov

PERKINS COIE LLP/MSFT
P. O. BOX 1247
SEATTLE WA 98111-1247

MAILED

FEB 12 2009

OFFICE OF PETITIONS

| | | |
|---|---|---|
| In re Application of | : | |
| VAYMAN, MARK | : | |
| Application No. 10/957,509 | : | ON APPLICATION FOR |
| Filed: 10/01/2004 | : | PATENT TERM ADJUSTMENT |
| Atty Docket No. 418268056US | : | |

This is in response to the "APPLICATION FOR PATENT TERM ADJUSTMENT RECONSIDERATION UNDER 37 C.F.R. §1.705(B)" filed January 5, 2009. Applicant requests that the determination of patent term adjustment be increased by 529 days to 1228 days assuming the patent issues on April 14, 2009. Applicant requests this correction on the basis that the Office will take in excess of three years to issue this patent and in light of the recent court decision in Wyeth v. Dudas, No. 07-1492 (D.D.C. September 30, 2008).

As the instant application for patent term adjustment requests reconsideration of the patent term adjustment as it relates to the Office's failure to issue the patent within three years of the filing date, a decision is being **held in abeyance** until after the actual patent date. Knowledge of the actual date the patent issues is required to calculate the amount, if any, of additional patent term patentee is entitled to for Office failure to issue the patent within three years. See 37 CFR 1.703(b).

Applicant is given **TWO (2) MONTHS** from the issue date of the patent to file a written request for reconsideration of the patent term adjustment for Office failure to issue the patent within three years. A copy of this decision should accompany

the request. Applicant may seek such consideration without payment of an additional fee. However, as to all other bases for seeking reconsideration of the patent term adjustment indicated in the patent, all requirements of 37 CFR 1.705(d) must be met. Requests for reconsideration on other bases must be timely filed and must include payment of the required fee.

Rather than file the request for reconsideration of Patent Term Adjustment at the time of the mailing of the notice of allowance, applicant is advised that they may wait until the time of the issuance of the patent and file a request for reconsideration of the patent term pursuant to 37 CFR 1.705(d). The USPTO notes that it does not calculate the amount of time earned pursuant to 37 CFR 1.702(b) until the time of the issuance of the patent and accordingly, the Office will consider any request for reconsideration of the patent term adjustment due to an error in the calculation of 37 CFR 1.702(b) to be timely if the request for reconsideration is filed within two months of the issuance of the patent.

The Office acknowledges submission of the $200.00 fee set forth in 37 CFR 1.18(e). No additional fees are required.

The application is being forwarded to the Office of Data Management for issuance of the patent. The patent term adjustment indicated on the patent (as shown on the Issue Notification mailed about three weeks prior to patent issuance) will include any additional adjustment accrued both for Office delay in issuing the patent more than four months after payment of the issue fee and satisfaction of all outstanding requirements, and for the Office taking in excess of three years to issue the patent (to the extent that the three-year period does not overlap with periods already accorded).

Telephone inquiries specific to this decision should be directed to Senior Petitions Attorney, Christina Tartera Donnell, at (571) 272-3211.

Kery A Fries

Kery A. Fries
Senior Legal Advisor
Office Patent Legal Administration

UNITED STATES PATENT AND TRADEMARK OFFICE

Commissioner for Patents
United States Patent and Trademark Office
P.O. Box 1450
Alexandria, VA 22313-1450
www.uspto.gov
DIW Oct-07

WEYERHAEUSER COMPANY
INTELLECTUAL PROPERTY DEPT., CH 1J27
P.O. BOX 9777
FEDERAL WAY WA 98063

**COPY MAILED**

OCT 10 2007

**OFFICE OF PETITIONS**

| | | |
|---|---|---|
| In re Application of | : | |
| Fouch et al. | : | |
| Application Number: 10/957511 | : | DECISION ON PETITION |
| Filing Date: 09/30/2004 | : | |
| Attorney Docket Number: 25601 | : | |

This is a decision on the petition filed on 28 August, 2007, under 37 CFR 1.137(b),[1] to revive the above-identified application.

The petition is **GRANTED**.

The application became abandoned on 14 March, 2007, for failure to timely file a proper reply to the final Office action mailed on 13 December, 2006, which set a three (3) month shortened statutory period for reply. On 13 February, 2007, an amendment after final rejection was filed. On 1 March, 2007, an Advisory

---

[1] Effective December 1, 1997, the provisions of 37 CFR 1.137(b) now provide that where the delay in reply was unintentional, a petition may be filed to revive an abandoned application or a lapsed patent pursuant to 37 CFR 1.137(b). A grantable petition filed under the provisions of 37 CFR 1.137(b) must be accompanied by:

(1) the required reply, unless previously filed. In a nonprovisional application abandoned for failure to prosecute, the required reply may be met by the filing of a continuing application. In a nonprovisional utility or plant application filed on or after June 8, 1995, and abandoned for failure to prosecute, the required reply may also be met by the filing of a request for continuing examination in compliance with § 1.114. In an application or patent, abandoned or lapsed for failure to pay the issue fee or any portion thereof, the required reply must be the payment of the issue fee or any outstanding balance thereof.

(2) the petition fee as set forth in 37 CFR 1.17(m);

(3) a statement that the entire delay in filing the required reply from the due date for the reply until the filing of a grantable petition pursuant to 37 CFR 1.137(b) was unintentional. The Commissioner may required additional information where there is a question whether the delay was unintentional; and

(4) any terminal disclaimer (and fee as set forth in 37 CFR 1.20(d)) required pursuant to 37 CFR 1.137(c)).

Acttion Before the Filing of an Appeal Brief was mailed, stating that the reply filed on 13 February, 2007, failed to place the application in condition for allowance. No extensions of the time for reply in accordance with 37 CFR 1.136(a) were obtained. Notice of Abandonment was mailed on 23 August, 2007.

Petitioners have filed a Request for Continued Examination (RCE) and requested the previously submitted amendment be considered as the submission required under 37 CFR 1.114.

This application is being forwarded to Technology Center 3679 for further processing.

Telephone inquiries concerning this matter may be directed to the undersigned at (571)272-3231.

Douglas I. Wood
Senior Petitions Attorney
Office of Petitions

UNITED STATES PATENT AND TRADEMARK OFFICE

Commissioner for Patents
United States Patent and Trademark Office
P.O. Box 1450
Alexandria, VA 22313-1450
www.uspto.gov

COPY MAILED

SEP 28 2006

OFFICE OF PETITIONS

GREGORY D. CALDWELL
BLAKELY, SOLOLOFF, TAYLOR & ZAFMAN LLP
12400 WILSHIRE BOULEVARD
SEVENTH FLOOR
LOS ANGELES CA 90025

In re Patent No. 6,988,804
Issued: January 24, 2006
Application No. 10/957,515
Filed: October 1, 2004
Atty. Dkt. No.: 1232-4862

: DECISION GRANTING PETITION
: UNDER 37 CFR 1.78(a)(3) AND
: REQUEST FOR CERTIFICATE OF
:
:

This is a decision on the petition, filed February 10, 2006, which is being treated as a petition under 37 CFR 1.78(a)(3), seeking to add a claim for priority under 35 U.S.C. § 120 to nonprovisional Application No. 10/157,556, filed May 29, 2002, by way of a certificate of correction.

The petition is **granted**.

A review of the file record fails to disclose that a claim for the benefit of priority to the above-noted, prior-filed nonprovisional application was made within the time period set forth in 37 CFR 1.78(a)(2)(ii) and further failed to include a proper reference to the prior-filed application as required by 37 CFR 1.78(a)(2)(i) and 1.78(a)(2)(iii).

The instant application was filed October 1, 2004. Therefore, since this application was filed after November 29, 2000, a petition under 37 CFR 1.78(a)(3), along with submission of a Certificate of Correction, is the appropriate avenue of relief to accept a late claim for the benefit of priority to a prior-filed nonprovisional application after issuance of the application into a patent. *See* MPEP 1481.

A petition for acceptance of a claim for late priority under 37 CFR 1.78(a)(3) must be accompanied by:

**(1)** the reference required by 35 U.S.C. § 120 and 37 CFR 1.78(a)(2)(i) of the prior-filed application, unless previously submitted;
**(2)** the surcharge set forth in § 1.17(t); and
**(3)** a statement that the entire delay between the date the claim was due under 37 CFR 1.78(a)(2)(ii) and the date the claim was filed was unintentional. The Director may require additional information where there is a question whether the delay was unintentional.

As the petition for acceptance of an unintentionally delayed claim for the benefit of priority under 35 U.S.C. § 120 to the above-noted, prior-filed nonprovisional application satisfies the conditions of 37 CFR 1.78(a)(3), the petition is granted.

A corrected Filing Receipt, which includes the priority claim to the above-noted, prior-filed nonprovisional application, accompanies this decision on petition.

Petitioner is advised that the granting of this petition and the mailing of a corrected Filing Receipt should not be viewed as an indication that a determination has been made that this application is entitled to claim benefit of the prior-filed application. A determination that applicant is entitled to claim benefit of the prior-filed application will be made by the Examiner prior to the mailing of a certificate of correction.

As authorized, the $1,370 surcharge fee, as well as the $100 certificate of correction fee, will be charged to petitioner's Deposit Account No. 50-2638.

Any inquiries concerning this decision may be directed to Alesia Brown at (571) 272-3205.

This application is being referred to the Certificates of Correction Branch for processing the request for a certificate of correction in accordance with this decision on the petition under 37 CFR 1.78(a)(3).

Frances Hicks

FRAN HICKS
Petitions Examiner
Office of Petitions

ATTACHMENT: Corrected Filing Receipt

UNITED STATES PATENT AND TRADEMARK OFFICE

UNITED STATES DEPARTMENT OF COMMERCE
United States Patent and Trademark Office
Address: COMMISSIONER FOR PATENTS
P.O. Box 1450
Alexandria, Virginia 22313-1450
www.uspto.gov

| APPL NO. | FILING OR 371 (c) DATE | ART UNIT | FIL FEE REC'D | ATTY.DOCKET NO | DRAWINGS | TOT CLMS | IND CLMS |
|---|---|---|---|---|---|---|---|
| 10/957,515 | 10/01/2004 | 2851 | 1266 | 1232-4862 | 14 | 9 | 5 |

**CONFIRMATION NO. 8369**

**CORRECTED FILING RECEIPT**

*OC000000020598504*

27123
MORGAN & FINNEGAN, L.L.P.
3 WORLD FINANCIAL CENTER
NEW YORK, NY 10281-2101

Date Mailed: 09/27/2006

Receipt is acknowledged of this regular Patent Application. It will be considered in its order and you will be notified as to the results of the examination. Be sure to provide the U.S. APPLICATION NUMBER, FILING DATE, NAME OF APPLICANT, and TITLE OF INVENTION when inquiring about this application. Fees transmitted by check or draft are subject to collection. Please verify the accuracy of the data presented on this receipt. **If an error is noted on this Filing Receipt, please mail to the Commissioner for Patents P.O. Box 1450 Alexandria Va 22313-1450. Please provide a copy of this Filing Receipt with the changes noted thereon. If you received a "Notice to File Missing Parts" for this application, please submit any corrections to this Filing Receipt with your reply to the Notice. When the USPTO processes the reply to the Notice, the USPTO will generate another Filing Receipt incorporating the requested corrections (if appropriate).**

**Applicant(s)**

Hidefumi Notagashira, Kanagawa, JAPAN;

**Power of Attorney:** The patent practitioners associated with Customer Number **27123**.

**Domestic Priority data as claimed by applicant**

This application is a CON of 10/629,113 07/29/2003 PAT 6,877,858
which is a CON of 10/157,556 05/29/2002 PAT 6,619,803

**Foreign Applications**

JAPAN 2001-161340 05/29/2001
JAPAN 2002-151625 05/24/2001
**If Required, Foreign Filing License Granted:** 12/06/2004

**The country code and number of your priority application, to be used for filing abroad under the Paris Convention, is US10/957,515**

**Projected Publication Date:** Not Applicable

**Non-Publication Request:** No

**Early Publication Request:** No

**Title**

PROJECTOR APPARATUS FOR PREVENTING DEGRADATION IN IMAGE QUALITY DUE TO HEAT

**Preliminary Class**

353

## PROTECTING YOUR INVENTION OUTSIDE THE UNITED STATES

Since the rights granted by a U.S. patent extend only throughout the territory of the United States and have no effect in a foreign country, an inventor who wishes patent protection in another country must apply for a patent in a specific country or in regional patent offices. Applicants may wish to consider the filing of an international application under the Patent Cooperation Treaty (PCT). An international (PCT) application generally has the same effect as a regular national patent application in each PCT-member country. The PCT process **simplifies** the filing of patent applications on the same invention in member countries, but **does not result** in a grant of "an international patent" and does not eliminate the need of applicants to file additional documents and fees in countries where patent protection is desired.

Almost every country has its own patent law, and a person desiring a patent in a particular country must make an application for patent in that country in accordance with its particular laws. Since the laws of many countries differ in various respects from the patent law of the United States, applicants are advised to seek guidance from specific foreign countries to ensure that patent rights are not lost prematurely.

Applicants also are advised that in the case of inventions made in the United States, the Director of the USPTO must issue a license before applicants can apply for a patent in a foreign country. The filing of a U.S. patent application serves as a request for a foreign filing license. The application's filing receipt contains further information and guidance as to the status of applicant's license for foreign filing.

Applicants may wish to consult the USPTO booklet, "General Information Concerning Patents" (specifically, the section entitled "Treaties and Foreign Patents") for more information on timeframes and deadlines for filing foreign patent applications. The guide is available either by contacting the USPTO Contact Center at 800-786-9199, or it can be viewed on the USPTO website at http://www.uspto.gov/web/offices/pac/doc/general/index.html.

For information on preventing theft of your intellectual property (patents, trademarks and copyrights), you may wish to consult the U.S. Government website, http://www.stopfakes.gov. Part of a Department of Commerce initiative, this website includes self-help "toolkits" giving innovators guidance on how to protect intellectual property in specific countries such as China, Korea and Mexico. For questions regarding patent enforcement issues, applicants may call the U.S. Government hotline at 1-866-999-HALT (1-866-999-4158).

---

## LICENSE FOR FOREIGN FILING UNDER
## Title 35, United States Code, Section 184
## Title 37, Code of Federal Regulations, 5.11 & 5.15

**GRANTED**

The applicant has been granted a license under 35 U.S.C. 184, if the phrase "IF REQUIRED, FOREIGN FILING LICENSE GRANTED" followed by a date appears on this form. Such licenses are issued in all applications where the conditions for issuance of a license have been met, regardless of whether or not a license may be required as set forth in 37 CFR 5.15. The scope and limitations of this license are set forth in 37 CFR 5.15(a) unless an earlier license has been issued under 37 CFR 5.15(b). The license is subject to revocation upon written notification. The date indicated is the effective date of the license, unless an earlier license of similar scope has been granted under 37 CFR 5.13 or 5.14.

This license is to be retained by the licensee and may be used at any time on or after the effective date thereof

unless it is revoked. This license is automatically transferred to any related applications(s) filed under 37 CFR 1.53(d). This license is not retroactive.

The grant of a license does not in any way lessen the responsibility of a licensee for the security of the subject matter as imposed by any Government contract or the provisions of existing laws relating to espionage and the national security or the export of technical data. Licensees should apprise themselves of current regulations especially with respect to certain countries, of other agencies, particularly the Office of Defense Trade Controls, Department of State (with respect to Arms, Munitions and Implements of War (22 CFR 121-128)); the Bureau of Industry and Security, Department of Commerce (15 CFR parts 730-774); the Office of Foreign Assets Control, Department of Treasury (31 CFR Parts 500+) and the Department of Energy.

**NOT GRANTED**

No license under 35 U.S.C. 184 has been granted at this time, if the phrase "IF REQUIRED, FOREIGN FILING LICENSE GRANTED" DOES NOT appear on this form. Applicant may still petition for a license under 37 CFR 5.12, if a license is desired before the expiration of 6 months from the filing date of the application. If 6 months has lapsed from the filing date of this application and the licensee has not received any indication of a secrecy order under 35 U.S.C. 181, the licensee may foreign file the application pursuant to 37 CFR 5.15(b).

UNITED STATES PATENT AND TRADEMARK OFFICE

NOV 27 2006

Commissioner for Patents
United States Patent and Trademark Office
P.O. Box 1450
Alexandria, VA 22313-1450
www.uspto.gov

JENKINS, WILSON, TAYLOR & HUNT, P. A.
3100 TOWER BLVD
SUITE 1200
DURHAM NC 27707

| | |
|---|---|
| In re Application of | : |
| Jeffrey S. Taylor et al | : |
| Serial No.: 10/957,517 | : PETITION DECISION |
| Filed: October 1, 2004 | : |
| Attorney Docket No.: 180/161/2/2 | : |

This is a decision on the PETITION FOR ACCEPTANCE OF COLOR DRAWINGS UNDER 37 CFR 1.84(a)(2). The petition was filed October 1, 2004, and refilled March 10, 2005. Entry of color drawings requires: 1) three sets of the color drawings, 2) a proper amendment to the specification indicating color photographs or drawings are present in the file, and 3) the required fee under 37 CFR 1.17(h).

A review of the application record indicates that the petition meets all of the requirements for acceptance of color drawings. This is not to be construed that all of the drawings are accepted, only that the color drawings are acceptable. The required amendment to the specification should not be contained in the body of the petition, but should be presented as a separate paper and applicants are requested to do so in the next communication with the Office.

The petition is **GRANTED**.

Should there be any questions with respect to this decision, please contact William R. Dixon, Jr., by mail addressed to: Director, Technology Center 1600, at the address listed above, or by telephone at 571-272-0519 or by facsimile transmission at 571-273-8300.

George Elliott
Director, Technology Center 1600

UNITED STATES PATENT AND TRADEMARK OFFICE

COMMISSIONER FOR PATENTS
UNITED STATES PATENT AND TRADEMARK OFFICE
P.O. BOX 1450
ALEXANDRIA, VA 22313-1450
www.uspto.gov

BRIAN T. RIVERS
NOKIA INCORPORATED
6000 CONNECTION DRIVE
MD 1-4-755
IRVING, TX 75039

**COPY MAILED**

MAR 17 2006

**OFFICE OF PETITIONS**

| | |
|---|---|
| In re Application of | : |
| Czaja, et al. | : DECISION GRANTING STATUS |
| Application No. 10/957,522 | : UNDER 37 CFR 1.47(a) |
| Filed: October 1, 2004 | : |
| Dkt. No.: NC29236 | : |
| For: MOBILE STATION HANDOFF | : |
| BETWEEN DIFFERENT CDMA | : |
| FREQUENCIES | : |

This decision is in response to the petition under 37 CFR 1.47(a), filed March 6, 2006.

The petition is **GRANTED**.

Petitioners have established inventor S. Czaja has refused to execute the declaration for the above-identified application having been presented with the application.

The above-identified application and papers have been reviewed and found in compliance with 37 CFR 1.47(a). This application is hereby accorded Rule 1.47(a) status.

As provided in Rule 1.47(c), this Office will forward notice of this application's filing to the non-signing inventors at the addresses given in the petition. Notice of the filing of this application will also be published in the Official Gazette.

After this decision is mailed, the above-identified application will be returned to the Office of Initial Patent Examination for further processing.

Telephone inquiries regarding this decision should be directed to the undersigned at (571) 272-3205.

Alesia M. Brown
Petitions Attorney
Office of Petitions

UNITED STATES PATENT AND TRADEMARK OFFICE

COMMISSIONER FOR PATENTS
UNITED STATES PATENT AND TRADEMARK OFFICE
P.O. BOX 1450
ALEXANDRIA, VA 22313-1450
www.uspto.gov

Stash Czaja
806 Ocean Crest
Cardiff, CA 92007

| | | |
|---|---|---|
| In re Application of | : | |
| Czaja, et al. | : | |
| Application No. 10/957,522 | : | LETTER |
| Filed: October 1, 2004 | : | |
| Dkt. No.: NC29236 | : | |
| For: MOBILE STATION HANDOFF | : | |
| BETWEEN DIFFERENT CDMA | : | |
| FREQUENCIES | : | |

COPY MAILED
MAR 17 2006
OFFICE OF PETITIONS

Dear Sir:

You are named as an inventor in the above-identified United States patent application filed under the provisions of 35 U.S.C. 116 (United States Code) and 37 C.F.R. § 1.47(a), Rules of Practice in Patent Cases. Should a patent be granted on the application you will be designated therein as a joint inventor.

As a named inventor you are entitled to inspect any paper in the file wrapper of the application, order copies of all or any part thereof (at a prepaid cost as per 37 C.F.R. § 1.19) or make your position of record in the application. Alternatively, you may arrange to do any of the preceding through a registered patent attorney or agent presenting written authorization from you. If you care to join the application, counsel of record (see below) would presumably assist you. Joining in the application would entail the filing of an appropriate oath or declaration by you pursuant to 37 C.F.R. § 1.63.

Telephone inquiries regarding this communication should be directed to the undersigned at (571) 272-3205. Requests for information regarding your application should be directed to the File Information Unit at (703) 308-2733. Information regarding how to pay for and order a copy of the application, or a specific paper in the application, should be directed to Certification Division at (703) 308-9726 or 1-800-972-6382 (outside the Washington D.C. area).

Telephone inquiries regarding this matter should be directed to the undersigned at (571) 272-3205.

Alesia M. Brown
Petitions Attorney
Office of Petitions

UNITED STATES PATENT AND TRADEMARK OFFICE

Commissioner for Patents
United States Patent and Trademark Office
P.O. Box 1450
Alexandria, VA 22313-1450
www.uspto.gov
DIW Apr-07

BRIAN T. RIVERS
NOKIA INCORPORATED
6000 CONNECTION DRIVE
MD 1-4-755
IRVING TX 75039

COPY MAILED

APR 0 4 2007

OFFICE OF PETITIONS

| | | |
|---|---|---|
| In re Application of | : | |
| Czaja et al. | : | |
| Application No. 10/957,522 | : | DECISION ON PETITION |
| Filed: 1 October, 2004 | : | |
| Atty Docket No. NC29236 | : | |

This is a decision on the petition filed on 7 November, 2006, under 37 CFR 1.137(b)[1], to revive the above-identified application.

The petition is **GRANTED**.

---

[1]Effective December 1, 1997, the provisions of 37 CFR 1.137(b) now provide that where the delay in reply was unintentional, a petition may be filed to revive an abandoned application or a lapsed patent pursuant to 37 CFR 1.137(b). A grantable petition filed under the provisions of 37 CFR 1.137(b) must be accompanied by:

(1) the required reply, unless previously filed. In a nonprovisional application abandoned for failure to prosecute, the required reply may be met by the filing of a continuing application. In a nonprovisional utility or plant application filed on or after June 8, 1995, and abandoned for failure to prosecute, the required reply may also be met by the filing of a request for continued examination in compliance with § 1.114. In an application or patent, abandoned or lapsed for failure to pay the issue fee or any portion thereof, the required reply must be the payment of the issue fee or any outstanding balance. In an application, abandoned for failure to pay the publication fee, the required reply must include payment of the publication fee.

(2) the petition fee as set forth in 37 CFR 1.17(m);

(3) a statement that the entire delay in filing the required reply from the due date for the reply until the filing of a grantable petition pursuant to 37 CFR 1.137(b) was unintentional. The Commissioner may required additional information where there is a question whether the delay was unintentional; and

(4) any terminal disclaimer (and fee as set forth in 37 CFR 1.20(d)) required pursuant to 37 CFR 1.137(c)).

The instant application became abandoned on 13 July, 2006, for failure to submit a timely reply to the non-final Office action mailed on 12 April, 2006, which set a two (2) month shortened period for reply. No extensions of the time for reply under 37 CFR 1.136(a) were obtained. The filing of the present petition precedes the mailing of Notice of Abandonment.

Receipt of the amendment filed on 7 November, 2006, is acknowledged.

It is not apparent whether the person signing the statement of unintentional delay was in a position to have firsthand or direct knowledge of the facts and circumstances of the delay at issue. Nevertheless, such statement is being treated as having been made as the result of a reasonable inquiry into the facts and circumstances of such delay.[2] In the event that such an inquiry has not been made, petitioner must make such an inquiry. If such inquiry results in the discovery that it is not correct that the entire delay in filing the required reply from the due date for the reply until the filing of a grantable petition pursuant to 37 CFR 1.137(b) was unintentional, petitioner must notify the Office.

The revocation and power of attorney filed with the petition, and on 20 March, 2007, cannot be accepted because it is unclear whether the person who signed the revocation and power of attorney form is authorized to do so. While a statement under 37 CFR 3.73(b) was received, it is signed by a different person than the revocation and power of attorney. Petitioners must provide a revocation and power of attorney signed by a person authorized to sign on behalf of the assignee, and evidence thereof.

The address on the petition is different than the address in Office records. A courtesy copy of this decision will be mailed to the address listed on the petition. All future correspondence will be mailed solely to the address of record.

This application is being referred to Technology Center Art Unit 2616 for further processing.

---

[2] See 37 CFR 10.18(b) and Changes to Patent Practice and Procedure; Final Rule Notice, 62 Fed. Reg. 53131, 53178 (October 10, 1997), 1208 Off. Gaz. Pat. Office 63, 103 (October 21, 1997).

Telephone inquiries concerning this matter may be directed to the undersigned at (571)272-3231.

Douglas I. Wood
Senior Petitions Attorney
Office of Petitions

Cc: Geza C. Ziegler, Jr.,
Perman & Green, LLP
425 Post Road
Fairfield CT 06824

UNITED STATES PATENT AND TRADEMARK OFFICE
FROM DIRECTORS OFFICE

APR 0 7 2006

TECHNOLOGY CENTER 3600

Commissioner for Patents
United States Patent and Trademark Office
P.O. Box 1450
Alexandria, VA 22313-1450
www.uspto.gov

MARSHALL, GERSTEIN & BORUN LLP
233 S. WACKER DRIVE, SUITE 6300
SEARS TOWER
CHICAGO, IL 60606

| | | |
|---|---|---|
| *In re* Application of MATSUDA ET AL. | : | |
| Appl. No.: 10/957,523 | : | **DECISION ON PETITON** |
| Filed: October 01, 2004 | : | **FOR SUPERVISORY** |
| For: Jet-Propulsion Watercraft | : | **REVIEW** |
| | : | *37 CFR 1.181* |
| | : | |
| | : | |
| | : | |

This is a decision on the petition filed February 27, 2006 for supervisory review of an examiner's action under 37 CFR 1.181. Petitioner requests the relief of withdrawal of the Final Rejection mailed February 15, 2006.

The petition is **Granted**.

On December 19, 2005, petitioner filed an amendment in response to the Office action of September 7, 2005. In this amendment claims 2-3 where amended and claims 6-9 added. On February 15, 2006, the examiner issued a Final Rejection that maintained the rejection of the previous Office action and added a new ground of rejection of claims 1-3 and 6-9 utilizing the Rheault reference. Although the addition of claims 6-9 necessitated this new ground of rejection, because claim 1 was included in this new ground of rejection but was un-amended, the finality of the Office action was premature. Accordingly, petitioner is entitled to the relief requested and the finality of the Office action of February 15, 2006 is hereby *withdrawn*. Since the only defect in the Office action was the premature determination of finality, the period of response for this Office action *continues to run* from the February 15, 2006 mailing date. Any response received to this Office action, however, will be treated as a response to a non-final action and will be entered.

Telephone inquiries regarding this decision should be directed to S. Joseph Morano, Supervisory Patent Examiner for Art Unit 3617, at (571) 272-6684. Telephone inquiries regarding the status of the claims and other examination related issues should be directed to the examiner of record, Ed Swinehart, at (571) 272-6688.

John Love

John Love
Director, Technology Center 3600
(571) 272-5250

SJM: 4/5/06

UNITED STATES PATENT AND TRADEMARK OFFICE

Commissioner for Patents
United States Patent and Trademark Office
P.O. Box 1450
Alexandria, VA 22313-1450
www.uspto.gov

WALL & TONG, LLP
ALCATEL-LUCENT USA INC.
595 SHREWSBURY AVENUE
SHREWSBURY, NJ 07702

MAILED

JUN 22 2009

OFFICE OF PETITIONS
ON PETITION

In re Application of :
Raul Benet Ballester et al :
Application No. 10/957,527 :
Filed: September 30, 2004 :
Attorney Docket No. BENET 7-13-19
(LCNT/12538

This is a decision on the petition, filed June 18, 2009 under 37 CFR 1.313(c)(2) to withdraw the above-identified application from issue after payment of the issue fee.

The petition is **GRANTED**.

The above-identified application is withdrawn from issue for consideration of a submission under 37 CFR 1.114 (request for continued examination). See 37 CFR 1.313(c)(2).

**Petitioner is advised that the issue fee paid on May 26, 2009 in the above-identified application cannot be refunded. If, however, the above-identified application is again allowed, petitioner may request that it be applied towards the issue fee required by the new Notice of Allowance.**[1]

Telephone inquiries should be directed to Irvin Dingle at (571) 272-3210.

This matter is being referred to Technology Center AU 2611 for processing of the request for continued examination under 37 CFR 1.114 and for consideration of the concurrently filed Information Disclosure Statement.

/Irvin Dingle/
Irvin Dingle
Petitions Examiner
Office of Petitions

---

[1] The request to apply the issue fee to the new Notice may be satisfied by completing and returning the new Issue Fee Transmittal Form PTOL-85(b), which includes the following language thereon: Commissioner for Patents is requested to apply the Issue Fee and Publication Fee (if any) or re-apply any previously paid issue fee to the application identified above. Petitioner is advised that, whether a fee is indicated as being due or not, the Issue Fee Transmittal Form **must** be completed and timely submitted to avoid abandonment. Note the language in bold text on the first page of the Notice of Allowance and Fee(s) Due (PTOL-85).

UNITED STATES PATENT AND TRADEMARK OFFICE

UNITED STATES DEPARTMENT OF COMMERCE
United States Patent and Trademark Office
Address: COMMISSIONER FOR PATENTS
P.O. Box 1450
Alexandria, Virginia 22313-1450
www.uspto.gov

WALL & TONG, LLP/
ALCATEL-LUCENT USA INC.
595 SHREWSBURY AVENUE
SHREWSBURY, NJ 07702

Mail Date: 05/13/2010

| | | |
|---|---|---|
| **Applicant** | : Raul Benet Ballester | : DECISION ON REQUEST FOR |
| **Patent Number** | : 7616724 | : RECALCULATION of PATENT |
| **Issue Date** | : 11/10/2009 | : TERM ADJUSTMENT IN VIEW |
| **Application No** | : 10/957,527 | : OF WYETH AND NOTICE OF INTENT TO |
| **Filed** | : 09/30/2004 | : ISSUE CERTIFICATE OF CORRECTION |
| | | : |

The Request for Recalculation is **GRANTED** to the extent indicated.

The patent term adjustment has been determined to be **1279** days. The USPTO will *sua sponte* issue a certificate of correction reflecting the amount of PTA days determined by the recalculation.

Prior to the issuance of the certificate of correction, the USPTO will afford patentee an opportunity to be heard and request reconsideration. Accordingly, patentee has **one month or thirty (30) days**, whichever is longer, to file a request for reconsideration of this patent term adjustment calculation. See 35 U.S.C. 154(b)(3)(B)(ii) and 37 CFR 1.322(a)(4). No extensions of time will be granted under 37 CFR 1.136.

Patentee should use document code PET.OP if electronically filing a request for reconsideration of this patent term adjustment calculation. The patentee must also include the information required by 37 CFR 1.705(b)(2) and the fee required by 37 CFR 1.18(e). If patentee does not file a timely request for reconsideration of this patent term adjustment calculation including the information required by 37 CFR 1.705(b)(2) and the fee required by 37 CFR 1.18(e), the USPTO will issue a certificate of correction reflecting the PTA determination noted above.

Patentee should be aware that in order to preserve the right to review in the United States District Court for the District of Columbia of the USPTO patent term adjustment determination, patentee must ensure that he or she also take the steps required under 35 U.S.C. 154(b)(4)(A) in a timely manner. Nothing in the request for recalculation should be construed as providing an alternative time frame for commencing a civil action under 35 U.S.C. 154(b)(4)(A).

Any questions concerning this decision should be directed to the Office of Patent Legal Administration at 571-272-7702.

UNITED STATES PATENT AND TRADEMARK OFFICE

UNITED STATES DEPARTMENT OF COMMERCE
United States Patent and Trademark Office
Address: COMMISSIONER FOR PATENTS
P.O. Box 1450
Alexandria, Virginia 22313-1450
www.uspto.gov

LENOVO (US) IP Law
1009 Think Place
Building One, 4th Floor 4B6
Morrisville, NC 27560

Mail Date: 04/21/2010

| | | |
|---|---|---|
| **Applicant** | : Steven A. Bade | : DECISION ON REQUEST FOR |
| **Patent Number** | : 7653819 | : RECALCULATION of PATENT |
| **Issue Date** | : 01/26/2010 | : TERM ADJUSTMENT IN VIEW |
| **Appliction No** | : 10/957,545 | : OF WYETH AND NOTICE OF INTENT TO |
| **Filed** | : 10/01/2004 | : ISSUE CERTIFICATE OF CORRECTION |
| | | : |

The Request for Recalculation is **GRANTED** to the extent indicated.

The patent term adjustment has been determined to be **1517** days. The USPTO will *sua sponte* issue a certificate of correction reflecting the amount of PTA days determined by the recalculation.

Prior to the issuance of the certificate of correction, the USPTO will afford patentee an opportunity to be heard and request reconsideration. Accordingly, patentee has **one month or thirty (30) days**, whichever is longer, to file a request for reconsideration of this patent term adjustment calculation. See 35 U.S.C. 154(b)(3)(B)(ii) and 37 CFR 1.322(a)(4). No extensions of time will be granted under 37 CFR 1.136.

Patentee should use document code PET.OP if electronically filing a request for reconsideration of this patent term adjustment calculation. The patentee must also include the information required by 37 CFR 1.705(b)(2) and the fee required by 37 CFR 1.18(e). If patentee does not file a timely request for reconsideration of this patent term adjustment calculation including the information required by 37 CFR 1.705(b)(2) and the fee required by 37 CFR 1.18(e), the USPTO will issue a certificate of correction reflecting the PTA determination noted above.

Patentee should be aware that in order to preserve the right to review in the United States District Court for the District of Columbia of the USPTO patent term adjustment determination, patentee must ensure that he or she also take the steps required under 35 U.S.C. 154(b)(4)(A) in a timely manner. Nothing in the request for recalculation should be construed as providing an alternative time frame for commencing a civil action under 35 U.S.C. 154(b)(4)(A).

Any questions concerning this decision should be directed to the Office of Patent Legal Administration at 571-272-7702.

UNITED STATES PATENT AND TRADEMARK OFFICE

Commissioner for Patents
United States Patent and Trademark Office
P.O. Box 1450
Alexandria, VA 22313-1450
www.uspto.gov

MAILED

MAR 11 2010

DIRECTOR OFFICE
TECHNOLOGY CENTER 2400

Gary S. Williams
Morgan, Lewis & Bockius LLP/Google
2 Palo Alto Square
3000 El Camino Real, Suite 700
Palo Alto CA 94306

In re Application of: FOX, Kevin D., et. al.
Application No. **10/957,551**
Filed: September 30, 2004
Docket No. 060963-5041US
Title: SYSTEM AND METHOD FOR ELECTRONIC CONTACT LIST-BASED SEARCH AND DISPLAY

DECISION ON PETITION
UNDER 37 C.F.R. § 1.181

This is a decision on the petition filed March 04, 2010 filed under 37 CFR § 1.181 to invoke Supervisory Authority of the Commissioner and require the Examiner to allow entry of After-final amendment filed under CFR 1.116 on February 09, 2010.

The above-mentioned after final according to Examiner's statement set forth on Advisory Action mailed March 01, 2010, regarding amendment to claim 23, changes the scope of the invention and would require new grounds of rejection, analogous to those presented in Final office action mailed December 09, 2009 with respect to claim 10.

The above-mentioned petition is hereby **DISMISSED**.

## RELEVANT PROSECUTION HISTORY

| | |
|---|---|
| 09/26/08 | (1st) Final Rejection of claims 1-3, 5-19 and 21-26 over Beringer in view of Lake. Claim 21 rejected under 103(a) over Beringer in view of Lake and Durazo et. al. and in further view of Diacakis. |
| 11/26/08 | After-final amendment under 37 CFR 1.116 in response to Final office action mailed 09/26/08. Response (without amendments to the claims) included arguments with respect to the Beringer reference and limitation of claim 2. Specifically, "Selecting an email document is not the same as and is not equivalent to selecting an entry from a list of entries in a contact list. When a user selects an email message from a list of messages (as in Beringer), the user expects to receive information about the user selected email. (p. 9-10 of remarks) |
| 12/08/09 | Telephonic Interview, where claim limitation "selection an entry from a list of entries in a contact list" as least was the topic of discussion. |

**01/02/09** Final Rejection of claims 10 and 23 were rejected under 102(e) as being anticipated by Beringer. In response to Applicant's arguments (After-final 11/26/08), Examine noted: selection of such an email message necessary includes the selection of a contact from a contact list, that is, selection of a sender of that message from the list of senders in the user's inbox, since every message in the inbox is associated with the sender (contact). ..."selecting an email documents from a list of email documents in the user's inbox necessarily includes selecting an entry from a list of entries in a contact list, wherein the claimed "contact list" is broadly, but reasonably interpreted as an inbox (101) in Beringer, containing a list of received emails and associated contacts, i.e. list of senders who contacted the user by sending an email. Applicants are advised to amend each independent claim to further specify that *the electronic contact list is the user's personal electronic address book containing contact details including at least one of an address, a telephone number, an e-mail address, a fax number, and a mobile phone number of a party,* as discussed at par. [00163] of the specification, as filed. Such amendment would clearly distinguish the claimed *contact list* from the *inbox* of Beringer. (see p. 3)

04/02/09 RCE is filed accompanied by amendments to the Claims 1, 2, 3, 10-15 and 22-26 indicating that "have been amended at the suggestion of the Examiner on page 3 of the Office Action dated January 2, 2009 and during the telephone interview on February 12, 2009. Claim 3 has been amended to clarify the numbering of the steps." (see p. 9). Applicant argued: "Beringer discloses displaying context information in response to the selection of an email message from a list of email messages. (Beringer, paragraph [0019]). Beringer simply does not disclose, teach or suggest displaying a "contact list of a computer user; wherein the contact list is personal to the computer user" let alone that a user selects an "entry from a list of entries in the contact list of the computer user." (see p. 12)

**5/22/09** Non-final office action was mailed. Claims 1-3, 5, 9, 11, 12, 16-19, 22, and 24-26 are rejected under 103(a) over Beringer in view of Han. Claims 6-8 and 13-15 are rejected under 103(a) over Beringer in view of Han and in further view of Joao. Claim 21 is rejected 103(a) over Beringer in view of Diacakis. Examiner noted that "is noted that applicants did not fully incorporate examiner's suggestion in claims amendment. In particular, independent claims have not been amended to specify that the electronic contact list is the user's personal electronic address book. The limitation of "the electronic contact list is personal to the computer user" falls short of specifying that it is an address book." (see p. 2 of action). Examiner re-stated this recommendation in instant office action (see p. 4 of action). Claims 10 and 23 are rejected as being anticipated by Beringer.

8/24/09 Response to non-final rejection included amendments to claim 1- 2, 10 and 22-26. Amendment to these claims (with the exception of claim 23) included substantially, further limiting the contact list to further "comprise the computer user's personal electronic address book," In response to argument section, applicant argues: As amended, independent claim 23 is patentable over Beringer for analogous reasons as those with respect to claim 10. Therefore, Beringer also cannot anticipate claim 23. Applicants respectfully request that this rejection be withdrawn. (see p. 11-12 of remarks)

12/09/09 Final Rejection was mailed. Claim 23 is rejected under 102(e) as being anticipated by Beringer. Claim 10 is rejected under 103(a) over Scian et. al. in view of Beringer. Claims 1-3, 5, 9, 11, 12, 16-19, 22, and 24-26 are rejected under 103(a) over Scian et al. in view of Beringer and in further view of Han. Claims 6-8 and 13-15 are rejected under 103(a) over Scian et al. in view of Beringer in view of Han and in further view of Joao. Claim 21 is rejected under 103(a) over Scian et. al. in view of Beringer and in further view of Diacakis.

02/09/10 After-Final Response including amendment to claim 23, wherein the electronic contact list comprises the computer user's personal electronic ~~contact list~~ address book. Applicant's remarks state: Claim 23 has been amended to correct an error. In particular, the limitation that the "contact list comprises the computer user's personal electronic contact list" is revised to be consistent with the corresponding limitations in claims 1, 2, 10, 22, 24, 25 and 26 (p. 9). Enclosed arguments are based on the claim limitation as amended.

03/01/10 Advisory action is mailed. Entry of After final mailed 02/09/10 is denied on the basis that "proposed amendment to claim 23 would change the scope of the invention and require new grounds of rejection, analogous to those presented in the Final Office action with respect to claim 10." (see p. 2)

03/04/10 Petition under 1.181 was filed requesting entry of After final response filed

02/09/10 Petition was filed on the basis that: "that the amendment to claim 23 places claim 23 in a better form for consideration on appeal under 37 C.F.R. § 1.116 (B)(2). In particular, the limitation that the "contact list comprises the computer user's personal electronic contact list" is revised to be consistent with the corresponding limitations in claims 1, 2, 10, 22, 24, 25 and 26." (p. 1)

03/09/10 Notice of Appeal Brief was filed.

## REGULATION PRACTICES AND PROCEDURES

**§ 1.116**. Amendments and affidavits or other evidence after final action and prior to appeal.

(a) An amendment after final action must comply with § 1.114 or this section.

(b) After a final rejection or other final action ( § 1.113) in an application or in an ex parte reexamination filed under § 1.510, or an action closing prosecution ( § 1.949) in an inter partes reexamination filed under § 1.913, but before or on the same date of filing an appeal ( § 41.31 or § 41.61 of this title):

(1) An amendment may be made canceling claims or complying with any requirement of form expressly set forth in a previous Office action;

(2) An amendment presenting rejected claims in better form for consideration on appeal may be admitted; or

(3) An amendment touching the merits of the application or patent under reexamination may be admitted upon a showing of good and sufficient reasons why the amendment is necessary and was not earlier presented.

706.07(e) Withdrawal of Final Rejection, General

> Once a final rejection that is not premature has been entered in an application/reexamination proceeding, it should not be withdrawn at the applicant's or patent owner's request except on a showing under 37 CFR 1.116(b). Further amendment or argument will be considered in certain instances. An amendment that will place the application either in condition for allowance or in better form for appeal may be admitted. Also, amendments complying with objections or requirements as to form are to be permitted after final action in accordance with 37 CFR 1.116(a). The examiner may withdraw the rejection of finally rejected claims. If new facts or reasons are presented such as to convince the examiner that the previously rejected claims are in fact allowable or patentable in the case of reexamination, then the final rejection should be withdrawn. Occasionally, the finality of a rejection may be withdrawn in order to apply a new ground of rejection.

## OPINION

The prosecution history of instant application has been carefully reviewed. The after final amendment does not cancel claims, complies with any requirement of form expressly set forth in a previous office action, places the application in condition for allowance nor simplifies issues on appeal (§ 1.116 (b) (1)) (see advisory action). If applicant believes this Amendment to claim 23 is necessary as it clarifies and/or narrows the issues for consideration by the Board, it remains unclear why this amendment was not presented earlier. Accordingly, request of entry of the after final amendment, at this stage, does not appear as an earnest attempt to advance prosecution.

The proposed after final amendment touches on the merits of the application and relates to a feature that was argued through out the prosecution history of instant application beginning from Applicant's first response, see communications dated 11/26/08, 01/02/09, and 04/02/09 supra. More specifically, Applicant's response(s) argued this precise feature (which amendment proposes to further limit) notwithstanding that such amendment would distinguish the claim over the Beringer reference (see 01/02/09 rejection supra). Applicant fails to show a good and sufficient reason(s) why the amendment is necessary at this stage and was not earlier presented (§ 1.116 (b) (3)), particularly, in view of Examiner's recommendations in this regards on record (see rejections 01/02/09 and 5/22/09 supra).

Applicant states that "that the amendment to claim 23 places claim 23 in a better form for consideration on appeal under 37 C.F.R. § 1.116 (B)(2). In particular, the limitation that the "contact list comprises the computer user's personal electronic contact list" is revised to be *consistent* with the corresponding limitations in claims 1, 2, 10, 22, 24, 25 and 26." (p. 1).

Applicant's concern regarding *consistency* is acknowledged, nevertheless, examiner proposed this amendment in an attempt to advance prosecution on two occasions, as mentioned above. Examiner has also indicated that proposed amendment to claim 23 would change the scope of the invention and require new grounds of rejection, particularly, analogous to those presented in the Final Office action with respect to claim 10 (see advisory supra).

For the reasons above, refusal to enter the proposed amendment has not deemed to be arbitrary and has been given sufficient consideration as to whether the proposed amendment to the claim(s) places the application in condition for allowance and/or as to whether the issues on appeal are simplified.

Accordingly, this petition is **dismissed.**

Any inquiry regarding this decision should be directed the undersigned whose telephone number is (571) 272-3902. If attempts to reach the undersigned by telephone are unsuccessful, Kim Huynh, Quality Assurance Specialist, can be reached at (571) 272-4147.

/bp/

/Beatriz Prieto/

Beatriz Prieto, Quality Assurance Specialist
Technology Center 2400
**Network, Multiplexing, Cable and Security**

UNITED STATES PATENT AND TRADEMARK OFFICE

UNITED STATES DEPARTMENT OF COMMERCE
United States Patent and Trademark Office
Address: COMMISSIONER FOR PATENTS
P.O. Box 1450
Alexandria, Virginia 22313-1450
www.uspto.gov

| APPLICATION NO. | FILING DATE | FIRST NAMED INVENTOR | ATTORNEY DOCKET NO. | CONFIRMATION NO. |
|---|---|---|---|---|
| 10/957,551 | 09/30/2004 | Kevin David Fox | 060963-5041US | 8798 |

82750 7590 03/12/2010
Morgan, Lewis & Bockius LLP/Google
2 Palo Alto Square
3000 El Camino Real, Suite 700
Palo Alto, CA 94306

| EXAMINER |
|---|
| SURVILLO, OLEG |

| ART UNIT | PAPER NUMBER |
|---|---|
| 2442 | |

| NOTIFICATION DATE | DELIVERY MODE |
|---|---|
| 03/12/2010 | ELECTRONIC |

**Please find below and/or attached an Office communication concerning this application or proceeding.**

The time period for reply, if any, is set in the attached communication.

Notice of the Office communication was sent electronically on above-indicated "Notification Date" to the following e-mail address(es):

padocketingdepartment@morganlewis.com
vskliba@morganlewis.com

UNITED STATES PATENT AND TRADEMARK OFFICE

COMMISSIONER FOR PATENTS
UNITED STATES PATENT AND TRADEMARK OFFICE
P.O. BOX 1450
ALEXANDRIA, VA 22313-1450
www.uspto.gov

ELECTRIC POWER RESEARCH INSTITUTE
C/O KILPATRICK STOCKTON LLP
1001 WEST FOURTH STREET
WINSTON - SALEM NC 27101

**MAILED**

JUN 21 2010

OFFICE OF PETITIONS

| | |
|---|---|
| In re Patent No. 7,527,733 | : |
| McKenna et al. | : DECISION ON REQUEST FOR |
| Issue Date: May 5, 2009 | : RECONSIDERATION OF |
| Application No. 10/957,553 | : PATENT TERM ADJUSTMENT |
| Filed: September 30, 2004 | : AND NOTICE OF INTENT |
| Attorney Docket No. | : TO ISSUE CERTIFICATE OF |
| 58113/345104 | : CORRECTION |
| Title: CHELATING AGENTS FOR | : |
| HEAVY METAL REMOVAL | : |

This is a decision on the petition filed on March 20, 2009, which is also being treated as a petition under 37 CFR 1.705(d) requesting that the patent term adjustment indicated on the above-identified patent be corrected to indicate that the term of the above-identified patent is extended or adjusted by four hundred fifty-three (453) days.

The request is DISMISSED.

Patentee is given thirty (30) days to respond to this decision. No extensions of time will be granted under § 1.136(a).

Patentee is advised that § 1.705(b) provides the avenue before the Office for requesting reconsideration of the patent term adjustment mailed with the notice of allowance. See § 1.702-1.705. Moreover, § 1.705(b) provides that:

An application for patent term adjustment under this section must be filed no later than the payment of the issue fee

but may not be filed earlier than the date of mailing of the notice of allowance. An application for patent term adjustment under this section must be accompanied by:

(1) The fee set forth in § 1.18(e) ...

The instant application for patent term adjustment was filed after the mailing of the notice of allowance and with payment of the issue fee. Thus, the application for patent term adjustment was timely filed. However, neither the fee under § 1.18(e) nor a general authorization to charge any required fees, accompanied the application for patent term adjustment. Accordingly, the request is dismissed for failure to comply with the requirement of paragraph (b)(1) to submit the fee under §1.18(e). Patentee is not precluded from promptly paying the required fee for consideration of this application for patent term adjustment. Patentee should call the undersigned upon submission of such fee.

With respect to Office delay in taking more than 3 years to issue the patent, rather than file the request for reconsideration of Patent Term Adjustment at the time of the mailing of the notice of allowance, patentee is advised that they may wait until the time of the issuance of the patent and file a request for reconsideration of the patent term pursuant to 37 CFR 1.705(d). The USPTO notes that it does not calculate the amount of time earned pursuant to 37 CFR 1.702(b) until the time of the issuance of the patent and accordingly, the Office will consider any request for reconsideration of the patent term adjustment due to an error in the calculation of 37 CFR 1.702(b) to be timely if the request for reconsideration is filed within two months of the issuance of the patent. As of the filing of this application, the patent had not issued. The patent has now issued.

Telephone inquiries specific to this matter should be directed to the undersigned at (571) 272-3219.

Nancy Johnson
Senior Petitions Attorney
Office of Petitions

UNITED STATES PATENT AND TRADEMARK OFFICE

Commissioner for Patents
United States Patent and Trademark Office
P.O. Box 1450
Alexandria, VA 22313-1450
www.uspto.gov

WONG, CABELLO, LUTSCH, RUTHERFORD &
BRUCCULERI L.L.P.
20333 SH 249
SUITE 600
HOUSTON, TX 77070

MAILED

AUG 17 2006

Technology Center 2100

In re Application of: Brunner, et al.
Application No. 10/957,557
Filed: October 1, 2004
For: PARTIAL DISPLAY UPDATES IN A WINDOWING SYSTEM USING A PROGRAMMABLE GRAPHICS PROCESSING UNIT

DECISION ON PETITION
TO MAKE SPECIAL
(ACCELERATED EXAMINATION)
UNDER M.P.E.P. §708.02 (VIII)

This is a response to the petition filed January 26, 2006, under 37 C.F.R. §1.102(d) and M.P.E.P. §708.02 (VIII): Accelerated Examination, to make the above-identified application special.

The Petition is **DISMISSED**.

M.P.E.P. §708.02, Section VIII which sets out the prerequisites for a grantable petition for Accelerated Examination under 37 C.F.R. §1.102(d) states in relevant part:

A new application (one which has not received any examination by the examiner) may be granted special status provided that applicant (and this term includes applicant's attorney or agent) complies with each of the following items:

(a) Submits a petition to make special accompanied by the fee set forth in 37 CFR 1.17(h);

**(b) Presents all claims directed to a single invention**, or if the Office determines that all the claims presented are not obviously directed to a single invention, will make an election without traverse as a prerequisite to the grant of special status;

(c) Submits a statement(s) that a pre-examination search was made, listing the field of search by class and subclass, publication, Chemical Abstracts, foreign patents, etc. The pre-examination search must be directed to the invention as claimed in the application for which special status is requested. A search made by a foreign patent office satisfies this requirement;

(d) Submits one copy each of the references deemed most closely related to the subject matter encompassed by the claims if said references are not already of record; and

**(e) Submits a detailed discussion of the references, which discussion points out, with the particularity required by 37 CFR 1.111 (b) and (c), how the claimed subject matter is patentable over the references.**

The petition filed January 26, 2006 fails to adequately meet requirements (b) & (e) of the criteria set forth above. With respect to requirement (b), the petition fails to state unequivocally "all claims are directed to a single invention". With respect to requirement (e), a complete detailed discussion of the (aforementioned most closely related) references has not been provided with the necessary specificity required under 37 CFR 1.111 (b) and (c). Specifically, Petitioner should ensure that the above discussion is directed to how the language of ***each of*** the independent claims is specifically distinguishable and patentable from the references provided in requirement (d) above. Reference is made to Petitioner's statement that "None of the identified prior art teach or describe methods or devices that determine a buffer's size and location based on an identified output region or adjusts the size and location of such a buffer in accordance with factors associated with the output region (e.g. a filter's input region associated with the output region) or adjusts the size of such a buffer in a top-to-bottom manner." It is noted that none of the independent claims (i.e. 1, 10, or 18) appear to include the above identified claim language.

Petition to Make Special **DISMISSED**.

Petitioner is given one opportunity to perfect the petition. Any request for reconsideration must be filed within TWO MONTHS of the mail date of this decision.

Until the renewed petition is submitted, the application will be returned to the examiner's docket to await treatment on the merits in the normal order of examination.

Brian L. Johnson
Special Program Examiner
Technology Center 2100
Computer Architecture, Software and Information Security
571-272-3595

UNITED STATES PATENT AND TRADEMARK OFFICE

UNITED STATES DEPARTMENT OF COMMERCE
United States Patent and Trademark Office
Address: COMMISSIONER FOR PATENTS
P.O. Box 1450
Alexandria, Virginia 22313-1450
www.uspto.gov

WONG, CABELLO, LUTSCH, RUTHERFORD & BRUCCULERI LLP
20333 Tomball Parkway
SUITE 600
HOUSTON, TX 77070

Mail Date: 04/20/2010

| | | |
|---|---|---|
| **Applicant** | : Ralph Brunner | : DECISION ON REQUEST FOR |
| **Patent Number** | : 7652678 | : RECALCULATION of PATENT |
| **Issue Date** | : 01/26/2010 | : TERM ADJUSTMENT IN VIEW |
| **Appliction No** | : 10/957,557 | : OF WYETH AND NOTICE OF INTENT TO |
| **Filed** | : 10/01/2004 | : ISSUE CERTIFICATE OF CORRECTION |
| | | : |

The Request for Recalculation is **GRANTED** to the extent indicated.

The patent term adjustment has been determined to be **1013** days. The USPTO will *sua sponte* issue a certificate of correction reflecting the amount of PTA days determined by the recalculation.

Prior to the issuance of the certificate of correction, the USPTO will afford patentee an opportunity to be heard and request reconsideration. Accordingly, patentee has **one month or thirty (30) days**, whichever is longer, to file a request for reconsideration of this patent term adjustment calculation. See 35 U.S.C. 154(b)(3)(B)(ii) and 37 CFR 1.322(a)(4). No extensions of time will be granted under 37 CFR 1.136.

Patentee should use document code PET.OP if electronically filing a request for reconsideration of this patent term adjustment calculation. The patentee must also include the information required by 37 CFR 1.705(b)(2) and the fee required by 37 CFR 1.18(e). If patentee does not file a timely request for reconsideration of this patent term adjustment calculation including the information required by 37 CFR 1.705(b)(2) and the fee required by 37 CFR 1.18(e), the USPTO will issue a certificate of correction reflecting the PTA determination noted above.

Patentee should be aware that in order to preserve the right to review in the United States District Court for the District of Columbia of the USPTO patent term adjustment determination, patentee must ensure that he or she also take the steps required under 35 U.S.C. 154(b)(4)(A) in a timely manner. Nothing in the request for recalculation should be construed as providing an alternative time frame for commencing a civil action under 35 U.S.C. 154(b)(4)(A).

Any questions concerning this decision should be directed to the Office of Patent Legal Administration at 571-272-7702.

UNITED STATES PATENT AND TRADEMARK OFFICE

Commissioner for Patents
United States Patent and Trademark Office
P.O. Box 1450
Alexandria, VA 22313-1450
www.uspto.gov
DIW Nov-06

GOWLING LAFLEUR HENDERSON, LLP
SUITE 2600
160 ELGIN STREET
OTTAWA ON K1P 1C3
CANADA

COPY MAILED
NOV 0 2 2006
OFFICE OF PETITIONS

In re Application of :
Patchell et al. :
Application No. 10/957,580 : ON PETITION
Filed: 5 October, 2004 :
For: BARRIER CLOSURE SYSTEM :

This is a decision on the petition to withdraw holding of abandonment, filed on 2 August, 2006.

This application became abandoned on 7 January, 2006, for failure to file a timely reply to the non-final Office action mailed on 6 October, 2005, which set a three (3) month shortened statutory period for reply. No extensions of the time for reply in accordance with 37 CFR 1.136(a) were obtained. On 15 June, 2006, a Notice of Abandonment was mailed.

In the present petition, petitioners request that the Office withdraw the holding of abandonment due to non-receipt of the Notice mailed on 6 October, 2005. In support of the allegation that the Notice was never received, petitioners have submitted a a statement by Gesilah Rada, Supervisor of Intellectual Property at counsel's law firm, explaining the docketing system used by petitioners counsel and stating that the office action was not received.

A review of the record indicates no irregularity in the mailing of the non-final Office action mailed on Notice of Non-Compliant Amendment mailed on 6 October, 2005, and in the absence of any irregularity in the mailing, there is a strong presumption that the Office action was properly mailed to the address of record. This presumption may be overcome by a showing that the Notice was not in fact received. The showing required to establish non-receipt of an Office communication must include a statement from the practitioner, stating that the practitioner did not receive the Office communication and attesting to the fact that a search of the file jacket and docket records indicates that the Office

communication was not received. A copy of the docket record where the non-received Office communication would have been entered had it been received and docketed must be attached to and referenced in practitioner's statement.[1] For example, if a three month period for reply was set in the non-received Office action, a copy of the docket report showing all replies docketed for a date three months from the mail date of the non-received Office action must be submitted as documentary proof of non-receipt of the Office action.

The showing of record is insufficient to warrant withdrawal of the holding of abandonment at this time. The non-final Office action set a three (3)-month extendable period for reply. Therefore, the practitioner must submit a copy of the docket report showing all replies docketed for a date three (3) months from the mail date of the non-final Office action as documentary proof of non-receipt of the Office action.

Further, petitioners must provide a statement from the practitioner stating that the practitioner did not receive the Office communication and attesting to the fact that a search of the file jacket and docket records indicates that the Office communication was not received. *A copy of the docket record where the non-received Office communication would have been entered had it been received and docketed must be attached to and referenced in practitioner's statement.*

As such the application is properly held abandoned.

The petition is **DISMISSED.**

Any request for reconsideration of this decision must be submitted within **TWO (2) MONTHS** from the mail date of this decision.

Further correspondence with respect to this matter should be addressed as follows:

By mail: Mail Stop Petition
Commissioner for Patents
P.O. Box 1450
Alexandria, VA 22313-1450

---

[1] M.P.E.P. § 711.03(c); See Notice entitled "Withdrawing the Holding of Abandonment When Office Actions Are Not Received," 1156 O.G. 53 (November 16, 1993).

Application No. 10/957,580

By FAX: (571) 273-8300
Attn: Office of Petitions

By hand: Customer Service Window
Mail Stop Petition
Randolph Building
401 Dulany Street
Alexandria, VA 22314

Telephone inquiries related to this decision should be directed to the undersigned at 571-272-3231.

D Wood

Douglas I. Wood
Senior Petitions Attorney
Office of Petitions

UNITED STATES PATENT AND TRADEMARK OFFICE

Commissioner for Patents
United States Patent and Trademark Office
P.O. Box 1450
Alexandria, VA 22313-1450
www.uspto.gov

**NGHIA VAN PHAM**
**781 STAFFORDSHIRE CT**
**POULSBO WA 98370**

MAILED

SEP 24 2009

OFFICE OF PETITIONS

In re Application of :
Pham, Nghia Van :
Application No. 10/957,581 : ON PETITION
Filed: October 5, 2004 :
Title: METHOD FOR STORING AND :
COMPARING COMPUTER GENERATED
LINES

This is a decision on the petition, filed April 30, 2009, which is being treated as a petition under 37 CFR 1.8(b), requesting withdrawal of the holding of abandonment in the above-identified application.

The petition is **DISMISSED**.

This application was held abandoned for failure to timely and properly respond to the Notice of Allowance of November 14, 2008, which set a three (3) month statutory period for reply. Accordingly, a reply was due on or before February 17, 2009, as stated on the Notice.

Petitioner states that a timely reply was submitted on February 11, 2009 via facsimile, which included a credit card payment form. However, according to USPTO records, the payment form was blank. A USPTO employee attempted to remedy the situation by giving a courtesy call to the number listed in the contact information of the file. Petitioner contends that the phone number used was the wrong number and therefore, gave him no chance to properly correct the problem.

As stated above, the telephone call by the USPTO employee was a courtesy and is not mandatory procedure. It is the petitioner's duty to provide the correct documents in a timely manner. Failure to do so will result in abandonment, as it did in the instant application.

If petitioner wishes to renew the instant petition, a copy of the credit card payment form submitted on February 11, 2009, shown properly filled out, along with a copy of the fax unit's confirmation report, verifying a successful transmission, should be submitted.

If petitioner cannot provide the evidence requested above, or simply does not wish to, petitioner may wish to file a petition under 37 CFR 1.137(b).

A grantable petition pursuant to 37 CFR 1.137(b) must be accompanied by:

(1) The reply required to the outstanding Office action or notice, unless previously filed.

(2) The petition fee as set forth in 37 CFR 1.17(m), **$810.00 for a small entity**;

(3) A statement that the entire delay in filing the required reply from the due date for the reply until the filing of a grantable petition was unintentional. The Director may require additional information where there is a question whether the delay was unintentional.

Further correspondence with respect to this matter should be addressed as follows:

By mail: Mail Stop PETITIONS
Commissioner for Patents
Post Office Box 1450
Alexandria, VA 22313-1450

By hand: Customer Window located at:

U.S. Patent and Trademark Office
Customer Service Window Randolph Building
401 Dulany Street
Alexandria, VA 22314

By fax: (571) 273-8300
ATTN: Office of Petitions

Any questions concerning this matter may be directed to the undersigned at (571) 272-3206.

Liana Walsh
Petitions Examiner
Office of Petitions

UNITED STATES PATENT AND TRADEMARK OFFICE

Commissioner for Patents
United States Patent and Trademark Office
P.O. Box 1450
Alexandria, VA 22313-1450
www.uspto.gov

**NGHIA VAN PHAM**
**781 STAFFORDSHIRE CT**
**POULSBO WA 98370**

**COPY MAILED**

JAN 04 2010

| | | |
|---|---|---|
| In re Application of<br>Pham, Nghia Van<br>Application No. 10/957,581<br>Filed: October 5, 2004<br>Title: METHOD FOR STORING AND COMPARING COMPUTER GENERATED LINES | :<br>:<br>:<br>:<br>: | ON PETITION |

This is a decision on the petition under 37 C.F.R. § 1.137(b), filed November 2, 2009, to revive the above-identified application.

The petition is **GRANTED**.

The petition satisfies the requirements of 37 CFR 1.137(b) in that petitioner has supplied (1) the reply in the form of the payment of the issue and publication fees (previously submitted April 30, 2009), (2) the petition fee, and (3) a proper statement of unintentional delay.

The file does not indicate a change of address has been submitted, although the address given on the petition differs from the address of record. If appropriate, a request to change the address of record should be filed. A courtesy copy of this decision is being mailed to the address given on the petition; however, the Office will mail all future correspondence solely to the address of record.

Telephone inquiries concerning this decision should be directed to the undersigned at (571) 272-3206.

This matter is being referred to the Office of Data Management for processing into a patent.

Liana Walsh
Petitions Examiner
Office of Petitions

cc: WILSON DANIEL SWAYZE, JR.
3804 CLEARWATER CT
PLANO, TX 75025

UNITED STATES PATENT AND TRADEMARK OFFICE

Commissioner for Patents
United States Patent and Trademark Office
P.O. Box 1450
Alexandria, VA 22313-1450
www.uspto.gov
DIW 02-05

SEAN W. GOODWIN
237- 8TH AVE. S.E., SUITE 360
THE BURNS BUILDING
CALGARY AB T2G 5C3
CANADA

COPY MAILED
FEB 18 2005
OFFICE OF PETITIONS

| | |
|---|---|
| In re Application of | : |
| Horner, Guichon, Danielson, and | : DECISION REFUSING STATUS |
| Beliveau | : UNDER 37 CFR 1.47(a) |
| Application No. 10/957,582 | : |
| Filed: 5 October, 2004 | : |
| Atty Docket No. 2318-001 | : |

This is in response to the petition filed under 37 CFR 1.47(a) on 18 January, 2005.

The petition is **DISMISSED**.

Rule 47 applicant is given TWO MONTHS from the mailing date of this decision to reply, correcting the below-noted deficiencies. Any reply should be entitled "Request for Reconsideration of Petition Under 37 CFR 1.47(a)," and should only address the deficiencies noted below, except that the reply may include an oath or declaration executed by the non-signing inventor. **FAILURE TO RESPOND WILL RESULT IN ABANDONMENT OF THE APPLICATION.** Extensions of time may be obtained in accordance with 37 CFR 1.136(a).

The above-identified application was filed on 5 October, 2004, without an executed oath or declaration. Accordingly, on 19 November, 2004, a Notice to File Missing Parts of Nonprovisional Application was mailed, requiring an executed oath or declaration and a surcharge for its late filing.

In response, on 18 January, 2005, petitioners filed the present petition, the late-filing surcharge, and a declaration naming W. Norval Horner, David A. Guichon, Arthur Danielson, and Dennis A. Beliveau as joint inventors and signed by all inventors except

Beliveau on behalf of themselves and non-signing joint inventor Beliveau.

Petitioners assert that joint inventor Beliveau has failed to sign the declaration. In support, petitioners have provided a copy of a letter by joint inventor Guichon to non-signing inventor Beliveau transmitting the declaration. Petitioners have also provided a declaration from joint inventor Guichon in which he states that no executed declaration has been received from joint inventor Beliveau.

A grantable petition under 37 CFR 1.47(a) requires:

(1) proof that the non-signing inventor cannot be reached or located, notwithstanding diligent effort, or refuses to sign the oath or declaration after having been presented with the application papers (specification, claims and drawings);

(2) an acceptable oath or declaration in compliance with 35 U.S.C. §§ 115 and 116;

(3) the petition fee;

(4) a surcharge of $130 or $65 (small entity) if the petition and/or declaration is not filed at the time of filing the application, and

(5) a statement of the last known address of the non-signing inventor.

The petition lacks items (1).

In regards to item (1), petitioners have not shown that joint inventor Beliveau was sent or presented with a copy of the application as filed (specification, including claims, drawings, if any, and the declaration).[1] Based on the showing of record, it does not appear that the specification, including claims, and the drawings, were among the application papers sent to the non-signing inventor.

Petitioners may show proof that a copy of the application was sent or given to the non-signing inventor for review by providing a copy of the cover letter transmitting the application papers (specification, including claims, drawings, if any, and the declaration) to the non-signing inventor or details given in an affidavit or declaration of facts by a person having first-hand knowledge of the details.

---

[1] MPEP 409.03(d).

Likewise, before a *bona fide* refusal to sign the declaration can be alleged, petitioners must show that a copy of the application was sent or given to the inventor. If the inventor refuses in writing, petitioners must submit a copy of that written refusal with any renewed petition. If the refusal was made orally to a person, then that person must provide details of the refusal in an affidavit or declaration of fact.

Further correspondence with respect to this matter should be addressed as follows:

By mail: Mail Stop Petition
Commissioner for Patents
P.O. Box 1450
Alexandria, VA 22313-1450

By FAX: (703) 872-9306
Attn: Office of Petitions

By hand: Customer Service Window
Mail Stop Petition
Randolph Building
401 Dulany Street
Alexandria, VA 22314

Telephone inquiries related to this decision should be directed to the undersigned at 571-272-3231.

D Wood

Douglas I. Wood
Senior Petitions Attorney
Office of Petitions

UNITED STATES PATENT AND TRADEMARK OFFICE

Commissioner for Patents
United States Patent and Trademark Office
P.O. Box 1450
Alexandria, VA 22313-1450
www.uspto.gov
DIW May-05

SEAN W. GOODWIN
237-8TH AVE., S.E., SUITE 360
THE BURNS BUILDING
CALGARY AB T2G 5C3
CANADA

COPY MAILED

MAY 13 2005

OFFICE OF PETITIONS

| | |
|---|---|
| In re Application of | : |
| Horner, Guichon, Danielson, and | : DECISION ACCORDING STATUS |
| Beliveau | : UNDER 37 CFR 1.47(a) |
| Application No. 10/957,582 | : |
| Filed: 5 October, 2004 | : |
| Atty Dckt No. 2318-001 | : |

This is in response to the renewed petition filed under 37 CFR 1.47(a) on 14 April, 2005.

The petition is **GRANTED**.

Petitioners have shown that the non-signing inventor, Dennis A. Beliveau, could not be located despite diligent efforts. Specifically, petitioners have shown, via the affidavit of joint inventor David A. Guichon, that repeated efforts were mean to contact the non-signing inventor, that an attempt was made to present the application papers to the non-signing inventor, but that the inventor could not be reached.

The above-identified application and papers have been reviewed and found in compliance with 37 CFR 1.47(a). This application is hereby accorded Rule 1.47(a) status.

As provided in Rule 1.47(c), this Office will forward notice of this application's filing to the non-signing inventor at the address given in the in the petition, not the declaration. Notice of the filing of this application will also be published in the *Official Gazette*.

The application is being referred to Technology Center 3672 for examination in due course.

Telephone inquiries related to this decision should be directed to the undersigned at 571-272-3231.

DWood

Douglas I. Wood
Senior Petitions Attorney
Office of Petitions

UNITED STATES PATENT AND TRADEMARK OFFICE

Commissioner for Patents
United States Patent and Trademark Office
P.O. Box 1450
Alexandria, VA 22313-1450
www.uspto.gov
DIW May-05

Dennis A. Beliveau
5547 Dalhart Hill N.W.
Calgary AB T3A 1S8
CANADA

COPY MAILED

MAY 13 2005

OFFICE OF PETITIONS

In re Application of
Horner et al.
Application No. 10/957,582
Filed: 5 October, 2004
For: APPLICATIONS OF WASTE GAS INJECTION INTO NATURAL GAS RESERVOIRS

Dear Mr. Beliveau:

You are named as a joint inventor in the above identified United States patent application, filed under the provisions of 35 U.S.C. 116 (United States Code), and 37 CFR 1.47(a), Rules of Practice in Patent Cases. Should a patent be granted on the application you will be designated therein as a joint inventor.

As a named inventor you are entitled to inspect any paper in the file wrapper of the application, order copies of all or any part thereof (at a prepaid cost per 37 CFR 1.19) or make your position of record in the application. Alternatively, you may arrange to do any of the preceding through a registered patent attorney or agent presenting written authorization from you. If you care to join the application, counsel of record (see below) would presumably assist you. Joining in the application would entail the filing of an appropriate oath or declaration by you pursuant to 37 CFR 1.63.

Telephone inquiries regarding this communication should be directed to the undersigned at 571/272-3231. Requests for information regarding your application should be directed to the File Information Unit at 703/308-2733. Information regarding how to pay for and order a copy of the application, or a specific paper in the application, should be directed to Certification Division at 703/308-9726 or 1-800-972-6382 (outside the Washington D.C. area).

Douglas I. Wood
Senior Petitions Attorney
Office of Petitions

SEAN W. GOODWIN
237-8TH AVENUE, S.E., SUITE 360
THE BURNS BUILDING
CALGARY AB T2G 5C3
CANADA

UNITED STATES PATENT AND TRADEMARK OFFICE

UNITED STATES DEPARTMENT OF COMMERCE
United States Patent and Trademark Office
Address: COMMISSIONER FOR PATENTS
P.O. Box 1450
Alexandria, Virginia 22313-1450
www.uspto.gov

H.C. PARK & ASSOCIATES, PLC
8500 LEESBURG PIKE
SUITE 7500
VIENNA, VA 22182

Mail Date: 04/20/2010

| | | |
|---|---|---|
| **Applicant** | : Seung-Jae Lee | : DECISION ON REQUEST FOR |
| **Patent Number** | : 7615303 | : RECALCULATION of PATENT |
| **Issue Date** | : 11/10/2009 | : TERM ADJUSTMENT IN VIEW |
| **Appliction No** | : 10/957,588 | : OF WYETH AND NOTICE OF INTENT TO |
| **Filed** | : 10/05/2004 | : ISSUE CERTIFICATE OF CORRECTION |
| | | : |

The Request for Recalculation is **GRANTED** to the extent indicated.

The patent term adjustment has been determined to be **948** days. The USPTO will *sua sponte* issue a certificate of correction reflecting the amount of PTA days determined by the recalculation.

Prior to the issuance of the certificate of correction, the USPTO will afford patentee an opportunity to be heard and request reconsideration. Accordingly, patentee has **one month or thirty (30) days**, whichever is longer, to file a request for reconsideration of this patent term adjustment calculation. See 35 U.S.C. 154(b)(3)(B)(ii) and 37 CFR 1.322(a)(4). No extensions of time will be granted under 37 CFR 1.136.

Patentee should use document code PET.OP if electronically filing a request for reconsideration of this patent term adjustment calculation. The patentee must also include the information required by 37 CFR 1.705(b)(2) and the fee required by 37 CFR 1.18(e). If patentee does not file a timely request for reconsideration of this patent term adjustment calculation including the information required by 37 CFR 1.705(b)(2) and the fee required by 37 CFR 1.18(e), the USPTO will issue a certificate of correction reflecting the PTA determination noted above.

Patentee should be aware that in order to preserve the right to review in the United States District Court for the District of Columbia of the USPTO patent term adjustment determination, patentee must ensure that he or she also take the steps required under 35 U.S.C. 154(b)(4)(A) in a timely manner. Nothing in the request for recalculation should be construed as providing an alternative time frame for commencing a civil action under 35 U.S.C. 154(b)(4)(A).

Any questions concerning this decision should be directed to the Office of Patent Legal Administration at 571-272-7702.

UNITED STATES PATENT AND TRADEMARK OFFICE

Commissioner for Patents
United States Patent and Trademark Office
P.O. Box 1450
Alexandria, VA 22313-1450
www.uspto.gov

OLIFF & BERRIDGE, PLC
P O BOX 19928
ALEXANDRIA, VA 22320

COPY MAILED

SEP 0 9 2005

OFFICE OF PETITIONS

| | | |
|---|---|---|
| In re Application of | : | |
| Akira Ohmura et al | : | |
| Application No. 10/957,591 | : | DECISION GRANTING PETITION |
| Filed: October 5, 2004 | : | UNDER 37 CFR 1.313(c)(2) |
| Attorney Docket No. 106121.10 | : | |

This is a decision on the petition, filed September 8, 2005, under 37 CFR 1.313(c)(2) to withdraw the above-identified application from issue after payment of the issue fee.

The petition is **GRANTED**.

The above-identified application is withdrawn from issue for consideration of a submission under 37 CFR 1.114 (request for continued examination). See 37 CFR 1.313(c)(2).

***Petitioner is advised that the issue fee paid on May 23, 2005 in the above-identified application cannot be refunded. If, however, the above-identified application is again allowed, petitioner may request that it be applied towards the issue fee required by the new Notice of Allowance.***[1]

Telephone inquiries should be directed to the undersigned at (571) 272-3218.

This matter is being referred to Technology Center AU 2116 for processing of the request for continued examination under 37 CFR 1.114 and for consideration of the Information Disclosure Statement.

Frances Hicks
Petitions Examiner
Office of Petitions

---

[1] *The request to apply the issue fee to the new Notice may be satisfied by completing and returning the new Issue Fee Transmittal Form PTOL-85(b), which includes the following language thereon: "Commissioner for Patents is requested to apply the Issue Fee and Publication Fee (if any) or re-apply any previously paid issue fee to the application identified above." Petitioner is advised that, whether a fee is indicated as being due or not, the Issue Fee Transmittal Form* ***must*** *be completed and timely submitted to avoid abandonment. Note the language in bold text on the first page of the Notice of Allowance and Fee(s) Due (PTOL-85).*

UNITED STATES PATENT AND TRADEMARK OFFICE

COMMISSIONER FOR PATENTS
UNITED STATES PATENT AND TRADEMARK OFFICE
P.O. BOX 1450
ALEXANDRIA, VA 22313-1450
www.uspto.gov

MAILED

SEP 19 2007

Technology Center 2100

| | | |
|---|---|---|
| *In re* Patent No. OHMURA ET AL. | : | |
| Issue Date: June 13, 2006 | : | **DECISION GRANTING** |
| Appl No.: 10/957,591 | : | **PETITION** |
| Filed: October 05, 2004 | : | *37 CFR 1.324* |
| For: DIGITAL CAMERA HAVING IMAGING PORTION, FIRST TERMINAL, AND SECOND TERMINAL FOR OUTPUTTING SIGNALS BASED ON IMAGE DATA IN ACCORDANCE WITH SAME DATA COMMUNICATION INTERFACE STANDARD | : | |

This is a decision on the petition filed January 18, 2007 to correct inventorship under 37 CFR 1.324.

The petition is granted.

The patented file is being forwarded to Certificate of Corrections Branch for issuance of a certificate naming only the actual inventor or inventors.

Rehana Perveen
Supervisory Patent Examiner
Art Unit 2116
Technology Center 2100

OLIFF & BERRIDGE, PLC
P.O. BOX 19928
ALEXANDRIA, VA 22320

UNITED STATES DEPARTMENT OF COMMERCE
U.S. Patent and Trademark Office
Address: COMMISSIONER FOR PATENTS
P.O. Box 1450
Alexandria, Virginia 22313-1450

| APPLICATION NO./ CONTROL NO. | FILING DATE | FIRST NAMED INVENTOR / PATENT IN REEXAMINATION | ATTORNEY DOCKET NO. |
|---|---|---|---|
| 10957591 | 10/5/04 | OHMURA ET AL. | 106121.10 |

| EXAMINER |
|---|
| Rehana Perveen |

| ART UNIT | PAPER |
|---|---|
| 2116 | 20070918 |

DATE MAILED:

OLIFF & BERRIDGE, PLC
P.O. BOX 19928
ALEXANDRIA, VA 22320

**Please find below and/or attached an Office communication concerning this application or proceeding.**

Commissioner for Patents

UNITED STATES PATENT AND TRADEMARK OFFICE

COMMISSIONER FOR PATENTS
UNITED STATES PATENT AND TRADEMARK OFFICE
P.O. BOX 1450
ALEXANDRIA, VA 22313-1450
www.uspto.gov

**DATE:** September 18, 2007
**TO:** Certificates of Correction Branch
**FROM:** Rehana Perveen
SPE, Art Unit 2116
**SUBJECT:** REQUEST FOR CERTIFICATE OF CORRECTION

Please issue a Certificate of Correction in U. S. Letters Patent No. 7,062,576 as specified on the attached Certificate.

Rehana Perveen, SPE
Art Unit 2116

REHANA PERVEEN
SUPERVISORY PATENT EXAMINER

# UNITED STATES PATENT AND TRADEMARK OFFICE

## CERTIFICATE

Patent No. 7,062,576
Patented: June 13, 2006

On petition requesting issuance of a certificate for correction of inventorship pursuant to 35 U.S.C. 256, it has been found that the above identified patent, through error and without deceptive intent, improperly sets forth the inventorship. Accordingly, it is hereby certified that the correct inventorship of this patent is:

Akira OHMURA

Rehana Perveen
Supervisory Patent Examiner
Art Unit 2116

REHANA PERVEEN
SUPERVISORY PATENT EXAMINER

PTO/SB/44 (02-01)
Approved for use through 1/31/2004. OMB 0651-0033
U.S. Patent and Trademark Office; U.S. DEPARTMENT OF COMMERCE
Under the Paperwork Reduction Action of 1995, no persons are required to respond to a collection of information unless it displays a valid OMB control number.
(Also Form PTO-1050)

## UNITED STATES PATENT AND TRADEMARK OFFICE
# CERTIFICATE OF CORRECTION

PATENT NO : 7,062,576

DATED : June 13, 2006

INVENTOR(S) : Akira OHMURA

It is certified that error appears in the above-identified patent and that said Letters Patent is hereby corrected as shown below:

On the Cover Page,

Item (75) should read:

(75) Inventors: Akira Ohmura, Tokyo (JP)

MAILING ADDRESS OF SENDER: OLIFF & BERRIDGE, PLC (MAC/CCS)
P.O. Box 19928
Alexandria, Virginia 22320
Telephone: (703) 836-6400

PATENT NO. 7,062,576

No. of additional copies

Burden Hour Statement: This form is estimated to take 1.0 hour to complete. Time will vary depending upon the needs of the individual case. Any comment on the amount of time you are required to complete this form should be sent to the Chief Information Officer, U.S. Patent and Trademark Office, Washington, DC 20231 DO NOT SEND FEES OR COMPLETED FORMS TO THIS ADDRESS. SEND TO: Attention Certificate of Corrections Branch, Commissioner for Patents, P.O. Box 1450, Alexandria, VA 22313-1450.

## SPE RESPONSE FOR CERTIFICATE OF CORRECTION

**Paper No.**:20070918

**DATE** : September 18, 2007

**TO SPE OF** : ART UNIT 2116

**SUBJECT** : Request for Certificate of Correction on Patent No.: 7,062,576

A response is requested with respect to the accompanying request for a certificate of correction.

Please complete this form and return with file, within **7** days to:
**Certificates of Correction Branch - PK 3-910**
Palm location **7590** - Tel. No. 305-8201

With respect to the change(s) requested, correcting Office and/or Applicant's errors, should the patent read as shown in the certificate of correction? No new matter should be introduced, nor should the scope or meaning of the claims be changed.

**Thank You For Your Assistance** **Certificates of Correction Branch**

**The request for issuing the above-identified correction(s) is hereby:**
Note your decision on the appropriate box.

☒ **Approved** **All** changes apply.

☐ **Approved in Part** Specify below which changes **do not** apply.

☐ **Denied** State the reasons for denial below.

**Comments:**

The Request to Correct Inventorship of this patent filed on 1/18/2007 is hereby GRANTED. Therefore, all changes are approved accordingly.

REHANA PERVEEN
SUPERVISORY PATENT EXAMINER

**SPE:** Rehana Perveen **Art Unit** 2116

UNITED STATES PATENT AND TRADEMARK OFFICE

Commissioner for Patents
United States Patent and Trademark Office
P.O. Box 1450
Alexandria, VA 22313-1450
www.uspto.gov

**BUCHANAN, INGERSOLL & ROONEY PC**
**POST OFFICE BOX 1404**
**ALEXANDRIA VA 22313-1404**

COPY MAILED

SEP 04 2008

OFFICE OF PETITIONS

| | | |
|---|---|---|
| In re Application of | : | DECISION ON PETITION |
| Willi Hempelmann | : | |
| Application No. 10/957,643 | : | |
| Filed: October 5, 2004 | : | |
| Attorney Docket No. 031309-009 | : | |

This is a decision on the petition, filed April 10, 2008, which is being treated as a petition under 37 CFR 1.181 (no fee) requesting withdrawal of the holding of abandonment in the above-identified application.

The petition is **GRANTED**.

This application was held abandoned for failure to reply to the nonfinal Office action mailed September 4, 2007, which set a three (3) month shortened statutory period for reply. No Notice of Abandonment was mailed.

Petitioner asserts that the Office action dated September 4, 2007 was not received.

A review of the written record indicates no irregularity in the mailing of the Office action, and, in the absence of any irregularity, there is a strong presumption that the Office action was properly mailed to the practitioner at the address of record. This presumption may be overcome by a showing that the Office action was not in fact received. In this regard, the showing required to establish the failure to receive the Office action must consist of the following:

1. a statement from practitioner stating that the Office action was not received by the practitioner;

2. a statement from the practitioner attesting to the fact that a search of the file jacket and docket records indicates that the Office action was not received; and

3. a copy of the docket record where the non-received Office action would have been entered had it been received and docketed must be attached to and referenced in the practitioner's statement.

*See* MPEP § 711.03(c) under subheading "Petition to Withdraw Holding of Abandonment Based on Failure to Receive Office Action," and "Withdrawing the Holding of Abandonment When Office Actions Are Not Received," 1156 Official Gazette 53 (November 16, 1993).

The petition satisfies the above-stated requirements. Further, the record shows that applicant's copy of the Office action was returned to the Office as undelivered. Accordingly, the application was not abandoned in fact.

In view of the above, the holding of abandonment is withdrawn.

This application is being referred to the Technology Center technical support staff of Art Unit 3746 for re-mailing the Office action of September 4, 2007. The period for reply will run from the mailing date of the Office action.

Carl Friedman
Petitions Examiner
Office of Petitions

UNITED STATES PATENT AND TRADEMARK OFFICE

Commissioner for Patents
United States Patent and Trademark Office
P.O. Box 1450
Alexandria, VA 22313-1450
www.uspto.gov

**BUCHANAN, INGERSOLL & ROONEY PC**
**POST OFFICE BOX 1404**
**ALEXANDRIA, VA 22313-1404**

**COPY MAILED**

JUN 30 2009

**OFFICE OF PETITIONS**

| | | |
|---|---|---|
| In re Application of | : | |
| **Willi HEMPELMANN** | : | |
| Application No. 10/957,643 | : | DECISION GRANTING PETITION |
| Filed: October 5, 2004 | : | UNDER 37 CFR 1.313(c)(3) |
| Attorney Docket No. **031309-009** | : | |

This is a decision on the petition, filed June 26, 2009, under 37 CFR 1.313(c)(3) to withdraw the above-identified application from issue after payment of the issue fee.

The petition is **GRANTED**.

Petitioner requests that the above-identified application be withdrawn from issue for express abandonment. *See* 37 CFR 1.313(c)(3).

The application is hereby withdrawn from issue, and the abandonment is hereby recognized.

Telephone inquiries should be directed to the undersigned at (571) 272-7253.

/Monica A. Graves/
Petitions Examiner, Office of Petitions

UNITED STATES PATENT AND TRADEMARK OFFICE

COMMISSIONER FOR PATENTS
UNITED STATES PATENT AND TRADEMARK OFFICE
P.O. BOX 1450
ALEXANDRIA, VA 22313-1450
www.uspto.gov

FOLEY AND LARDNER LLP
SUITE 500
3000 K STREET NW
WASHINGTON DC 20007

COPY MAILED

AUG 3 1 2009

OFFICE OF PETITIONS

| | | |
|---|---|---|
| In re Patent No. 7,445,076 | : | |
| Issued: November 4, 2008 | : | |
| Application No. 10/957,694 | : | PATENT TERM ADJUSTMENT |
| Filed: October 5, 2004 | : | |
| Dkt. No.: 040302-0418 | : | |

This is a decision on the "REQUEST FOR RECONSIDERATION OF PATENT TERM ADJUSTMENT UNDER 37 CFR 1.705," filed December 22, 2008. This matter is being properly treated under 37 CFR 1.705(d).

The request for reconsideration of patent term adjustment (PTA) is **DISMISSED**.

Patentee requests that the determination of patent term adjustment be corrected from 480 days to 703 days.

The application matured into U.S. Patent No. 7,445,076 on November 4, 2008 with a revised patent term adjustment of 480 days. The application was filed October 5, 2004. A request for continued examination was filed May 15, 2008. The Office determined that a portion of the 223 days of Office delay pursuant to 35 U.S.C. 154(b)(1)(B) and 37 CFR 1.702(b)[1,2] overlaps with

---

[1] Pursuant to 35 U.S.C. 154(b)(1)(B), 37 CFR 1.702(b) provides, in pertinent part, that:

> Failure to issue a patent within three years of the actual filing date of the application. Subject to the provisions of 35 U.S.C. 154(b) and this subpart, the term of an original patent shall be adjusted if the issuance of the patent was delayed due to the failure of the Office to issue a patent within three years after the date on which the application was filed under 35 U.S.C. 111(a) or the national stage commenced under 35 U.S.C. 371(b) or (f) in an international application, but not including:
>
> (i) any time consumed by continued examination of the application requested by the applicant under section 132(b).

[2] As of the filing of the RCE on May 15, 2008, the application was pending three years and 223 days.

the 480 days of Office delay pursuant to 35 U.S.C. 154(b)(1)(A) and 37 CFR 1.702(a)(1)[3,4] accorded prior to the filing of the request for continued examination. As such, the Office allowed only entry of the actual period of delay, to wit, 571 days. No additional days of patent term adjustment were entered at issuance under the three-year pendency provision. Given the applicant delay of 91 days and the overall adjustment of 571 days, the patent issued with a revised patent term adjustment of 480 days (571 days less 91 days).

On December 22, 2008, patentee timely submitted this request for reconsideration of patent term adjustment (with required fee), asserting that the correct number of days of Patent Term Adjustment is 703 days under the courts interpretation of the overlap provision as set forth in Wyeth v. Dudas, 580 F. Supp. 2d 138, 88 U.S.P.Q. 2d 1538 (D.D.C. 2008). Patentee asserts that pursuant to Wyeth, a PTO delay under §154(b)(1)(A) overlaps with a delay under §154(b)(1)(B) only if the delays "occur on the same day." Patentee maintains that the total non-overlapping PTO delay under §154(b)(1)(A) & (B) is 794 days (480 days + 223 days) as these periods do not occur on the same day. Further, given the applicant delay of 91 days, patentee asserts entitlement to 703 (794 days – 91 days) of patent term adjustment.

Patentee's interpretation of the period of overlap has been considered, but found inconsistent with the Office's interpretation of the overlap provision, 35 U.S.C. 154(b)(2)(A). 35 U.S.C. 154(b)(2)(A) limits the adjustment of patent term, as follows:

> To the extent that the periods of delay attributable to grounds specified in paragraph (1) overlap, the period of any adjustment granted under this subsection shall not exceed the actual number of days the issuance of the patent was delayed.

As explained in *Explanation of 37 CFR 1.703(f)*[5] *and of the United States Patent and Trademark Office Interpretation of 35 U.S.C. 154(b)(2)(A)*, 69 Fed. Reg. 34283 (June 21, 2004), the Office

---

[3] 37 CFR § 1.702, provides grounds for adjustment of patent term due to examination delay under the Patent Term Guarantee Act of 1999 (original applications, other than designs, filed on or after May 29, 2000).

> (a) Failure to take certain actions within specified time frames. Subject to the provisions of 35 U.S.C. 154(b) and this subpart, the term of an original patent shall be adjusted if the issuance of the patent was delayed due to the failure of the Office to:
> (1) Mail at least one of a notification under 35 U.S.C. 132 or a notice of allowance under 35 U.S.C. 151 not later than fourteen months after the date on which the application was filed under 35 U.S.C. 111(a) or fulfilled the requirements of 35 U.S.C. 371 in an international application;

[4] A first Office action was mailed June 29, 2007, fourteen months and 571 days after the application filing date, October 5, 2004.

[5] Likewise, 37 CFR 1.703(f) provides that:

interprets 35 U.S.C. 154(b)(2)(A) as permitting either patent term adjustment under 35 U.S.C. 154(b)(1)(A)(i)-(iv), or patent term adjustment under 35 U.S.C. 154(b)(1)(B), but not as permitting patent term adjustment under both 35 U.S.C. 154(b)(1)(A)(i)-(iv) and 154(b)(1)(B). Accordingly, the Office implements the overlap provision as follows:

> If an application is entitled to an adjustment under 35 U.S.C. 154(b)(1)(B), the entire period during which the application was pending (except for periods excluded under 35 U.S.C. 154(b)(1)(B)(i)-(iii)), and not just the period beginning three years after the actual filing date of the application, is the period of delay under 35 U.S.C. 154(b)(1)(B) in determining whether periods of delay overlap under 35 U.S.C. 154(b)(2)(A). Thus, any days of delay for Office issuance of the patent more than 3 years after the filing date of the application, which overlap with the days of patent term adjustment accorded prior to the issuance of the patent will not result in any additional patent term adjustment. See 35 U.S.C. 154(b)(1)(B), 35 U.S.C. 154(b)(2)(A), and 37 CFR § 1.703(f). See *Changes to Implement Patent Term Adjustment Under Twenty Year Term; Final Rule*, 65 Fed. Reg. 54366 (Sept. 18, 2000). See also *Revision of Patent Term Extension and Patent Term Adjustment Provisions; Final Rule*, 69 Fed. Reg. 21704 (April 22, 2004), 1282 Off. Gaz. Pat. Office 100 (May 18, 2004).

Further, as stated in the *Explanation of 37 CFR 1.703(f) and of the United States Patent and Trademark Office Interpretation of 35 U.S.C. 154(b)(2)(A)*, the Office has consistently taken the position that if an application is entitled to an adjustment under the three-year pendency provision of 35 U.S.C. 154(b)(1)(B), the entire period during which the application was pending before the Office (except for periods excluded under 35 U.S.C. 154(b)(1)(B)(i)-(iii)), and not just the period beginning three years after the actual filing date of the application, is the relevant period under 35 U.S.C. 154(b)(1)(B) in determining whether periods of delay "overlap" under 35 U.S.C. 154(b)(2)(A).

This interpretation is consistent with the statute. Taken together the statute and rule provide that to the extent that periods of delay attributable to grounds specified in 35 U.S.C. 154(b)(1) and in corresponding §1.702 overlap, the period of adjustment granted shall not exceed the actual number of days the issuance of the patent was delayed.

In this instance, the relevant period under 35 U.S.C. 154(b)(1)(B) in determining whether periods of delay "overlap" under 35 U.S.C. 154(b)(1)(A) is the period during which the application was pending before the Office beginning on the application filing date under 35 U.S.C. 111(a), October 5, 2004, and ending on the date of filing of a request for continued examination (RCE), May 15, 2008 (not including any other periods excluded under 35 U.S.C. 154(b)(1)(B)(i)-(iii)). The relevant period ends with the filing of the RCE as the three-year time frame specified in 35

---

To the extent that periods of delay attributable to the grounds specified in §1.702 overlap, the period of adjustment granted under this section shall not exceed the actual number of days the issuance of the patent was delayed.

U.S.C. 154(b)(1)(B) does not include the period subsequent to the filing of the RCE. 35 U.S.C. 154(b)(1)(B)(i).

Pursuant to 35 U.S.C. 154(b)(1)(A) and 37 CFR 1.702(a)(1), 571 days of patent term adjustment were accorded during the pendency of the application for Office delay prior to the filing of the request for continued examination. Pursuant to 35 U.S.C. 154(b)(1)(B) and 37 CFR 1.702(b), 223 days of patent term adjustment accrued for Office issuance of the patent more than three years after the filing date of the application.

All of the 223 days of delay under 37 CFR 1.702(b) overlap with the 571 days of patent term adjustment under 37 CFR 1.702(a)(1). Entry of both the 223 days and the 571 days is neither permitted nor warranted given that 571 days is the actual number of days issuance of the patent was delayed.

Accordingly, at issuance, the Office properly entered 480 days of patent term adjustment, having considered the 223 days of Office delay under the three-year pendency provision in conjunction with the 571 days of examination delay, and having reduced the adjustment 91 days for applicant's delay.

In view thereof, the Office affirms that the revised determination of patent term adjustment at the time of the issuance of the patent is 480 days.

The Office acknowledges submission of the $200.00 fee set forth in 37 CFR 1.18(e). No additional fees are required.

Telephone inquiries specific to this matter should be directed to the undersigned at (571) 272-3205.

Alesia M. Brown
Petitions Attorney
Office of Petitions

UNITED STATES PATENT AND TRADEMARK OFFICE

UNITED STATES DEPARTMENT OF COMMERCE
United States Patent and Trademark Office
Address: COMMISSIONER FOR PATENTS
P.O. Box 1450
Alexandria, Virginia 22313-1450
www.uspto.gov

DICKSTEIN SHAPIRO LLP
1825 EYE STREET, NW
WASHINGTON, DC 20006

Mail Date: 04/21/2010

| | | |
|---|---|---|
| **Applicant** | : Junichi Nakamura | : DECISION ON REQUEST FOR |
| **Patent Number** | : 7570293 | : RECALCULATION of PATENT |
| **Issue Date** | : 08/04/2009 | : TERM ADJUSTMENT IN VIEW |
| **Appliction No** | : 10/957,724 | : OF WYETH AND NOTICE OF INTENT TO |
| **Filed** | : 10/05/2004 | : ISSUE CERTIFICATE OF CORRECTION |
| | | : |

The Request for Recalculation is **GRANTED** to the extent indicated.

The patent term adjustment has been determined to be **1338** days. The USPTO will *sua sponte* issue a certificate of correction reflecting the amount of PTA days determined by the recalculation.

Prior to the issuance of the certificate of correction, the USPTO will afford patentee an opportunity to be heard and request reconsideration. Accordingly, patentee has **one month or thirty (30) days**, whichever is longer, to file a request for reconsideration of this patent term adjustment calculation. See 35 U.S.C. 154(b)(3)(B)(ii) and 37 CFR 1.322(a)(4). No extensions of time will be granted under 37 CFR 1.136.

Patentee should use document code PET.OP if electronically filing a request for reconsideration of this patent term adjustment calculation. The patentee must also include the information required by 37 CFR 1.705(b)(2) and the fee required by 37 CFR 1.18(e). If patentee does not file a timely request for reconsideration of this patent term adjustment calculation including the information required by 37 CFR 1.705(b)(2) and the fee required by 37 CFR 1.18(e), the USPTO will issue a certificate of correction reflecting the PTA determination noted above.

Patentee should be aware that in order to preserve the right to review in the United States District Court for the District of Columbia of the USPTO patent term adjustment determination, patentee must ensure that he or she also take the steps required under 35 U.S.C. 154(b)(4)(A) in a timely manner. Nothing in the request for recalculation should be construed as providing an alternative time frame for commencing a civil action under 35 U.S.C. 154(b)(4)(A).

Any questions concerning this decision should be directed to the Office of Patent Legal Administration at 571-272-7702.

**UNITED STATES DEPARTMENT OF COMMERCE**
**Patent and Trademark Office**
ASSISTANT SECRETARY OF COMMERCE AND
COMMISSIONER OF PATENTS AND TRADEMARKS
Washington, DC 20231

12/16/09

Patent No. :7599436
Inventor(s) :Takahiro Kobayakawa
Issued : 10/6/2009
Title : METHOD OF DETERMINING SEARCH REGION OF MOTION VECTOR AND MOTION VECTOR DETECTION APPARATUS
Atty.doc./File No.

Request for Certificates of Correction

Consideration has been given to your request for the issuance of a Certificate of Correction, for the above – identified patent under the provisions of CFR 1.322.

Inspection of the application for the patent reveals col. 14 claim 10, line 36 is printed in accordance with the record please show evidence of supporting data or amendment. Therefore being no fault on the Patent and Trademark Office, It has no authority to issue a certificate of correction under the provision of 1.322.

In view of the forgoing, your request in this matter, is hereby denied.

Future written correspondence concerning this matter should be filed and directed to Decisions & Certificates of Correction Branch.

Henry Randall
Decisions & Certificates
of Correction Branch
(703) 756-1571

STAAS & HALSEY LLP
SUITE 700
1201 NEW YORK AVENUE, N.W.
WASHINGTON, DC 20005

HR

UNITED STATES PATENT AND TRADEMARK OFFICE

Commissioner for Patents
United States Patent and Trademark Office
P.O. Box 1450
Alexandria, VA 22313-1450
www.uspto.gov

**MCGINN INTELLECTUAL PROPERTY LAW GROUP, PLLC**
**8321 OLD COURTHOUSE ROAD**
**SUITE 200**
**VIENNA VA 22182-3817**

**COPY MAILED**
AUG 0 1 2008

| | | |
|---|---|---|
| In re Patent No. 7,265,446 | : | |
| Issue Date: September 4, 2007 | : | |
| Application No. 10/957,739 | : | ON PETITION |
| Filed: October 5, 2004 | : | |
| Attorney Docket No. WNZ-2741 | : | |

This is a decision on the petition filed October 10, 2007, which is being treated as a request under 37 CFR 3.81(b)[1] to correct the name of an assignee on the front page of the above-identified patent by way of a Certificate of Correction.

The request is **GRANTED**.

Telephone inquiries concerning this decision may be directed to Carl Friedman at (571) 272-6842. Inquiries regarding the issuance of a certificate of correction should be directed to the Certificate of Correction Branch at (571) 272-4200.

The Certificates of Correction Branch will be notified of this decision granting the petition under 37 CFR 3.81(b) and directing issuance of the requested Certificate of Correction.

Carl Friedman
Petitions Examiner
Office of Petitions

[1] *See* MPEP 1309, subsection II; and Official Gazette of June 22, 2004.

UNITED STATES PATENT AND TRADEMARK OFFICE

Commissioner for Patents
United States Patent and Trademark Office
P.O. Box 1450
Alexandria, VA 22313-1450
www.uspto.gov

DITTHAVONG & CARLSON, P.C.
SUITE A
10507 BRADDOCK RD
FAIRFAX, VA 22032

COPY MAILED

OCT 2 7 2005

OFFICE OF PETITIONS

In re Application of :
Tony Petrilli :
Application No. 10/957,750 :
Filed: October 5, 2004 :
Attorney Docket No. 01045-1005 :

ON PETITION

This is a decision on the petition under 37 CFR 1.137(b), filed October 3, 2005, to revive the above-identified application.

The petition is **DISMISSED.**

Any request for reconsideration of this decision must be submitted within TWO (2) MONTHS from the mail date of this decision. Extensions of time under 37 CFR 1.136(a) are permitted. The reconsideration request should include a cover letter entitled "**Renewed Petition under 37 CFR 1.137(b)**." This is **not** final agency action within the meaning of 5 U.S.C. § 704.

The above-identified application became abandoned for failure to reply in a timely manner to the Notice to File Missing Parts of Application (Notice) mailed January 10, 2005. The Notice set a period for reply of two (2) months from the mail date of the Notice. No extensions of time under the provisions of 37 CFR 1.136(a) were obtained. Accordingly, the above-identified application became abandoned on March 11, 2005.

A grantable petition under 37 CFR 1.137(b) must be accompanied by: (1) the required reply, unless previously filed; (2) the petition fee as set forth in 37 CFR 1.17(m); (3) a statement that the entire delay in filing the required reply from the due date for the reply until the filing of a grantable petition pursuant to 37 CFR 1.137(b) was unintentional; and (4) any terminal disclaimer (and fee as set forth in 37 CFR 1.20(d)) required by 37 CFR 1.137(c). Where there is a question as to whether either the abandonment or the delay in filing a petition under 37 CFR 1.137 was unintentional, the Commissioner may require additional information. See MPEP 711.03(c)(III)(C) and (D). The instant petition lack(s) item(s) (1).

A petition to revive cannot be granted where there is an outstanding requirement. In the instant case, there was no response to the Notice to File Missing Parts of Nonprovisional Application mailed January 10, 2005. The USPTO Finance record show $2330 was charged to petitioner's credit card on October 3, 2005. A courtesy copy of the Notice to File Missing Parts of Nonprovisional Application is enclosed. Accordingly, the petition to revive cannot be granted until the outstanding requirement(s) is received.

Further correspondence with respect to this matter should be addressed as follows:

By mail: Mail Stop PETITION
Commissioner for Patents
Post Office Box 1450
Alexandria, VA 22313-1450

By hand: Customer Service Window
Randolph Building
401 Dulany Street
Alexandria, VA 22314

By facsimile: (571) 273-8300
ATTN: Office of Petitions

Telephone inquiries concerning this decision should be directed to the undersigned at (571) 272-3210.

Irvin Dingle
Petitions Examiner
Office of Petitions

Attachment: Notice to File Missing Parts Of Nonprovisional Application, Mailed January 10, 2005.

UNITED STATES PATENT AND TRADEMARK OFFICE

Commissioner for Patents
United States Patent and Trademark Office
P. O. Box 1450
Alexandria, VA 22313-1450
www. uspto. gov

DITTHAVONG & CARLSON, P.C.
10507 BRADDOCK ROAD
SUITE A
FAIRFAX, VA 22032

COPY MAILED
AUG 1 1 2006
OFFICE OF PETITIONS

| | | |
|---|---|---|
| In re Application of | : | |
| Tony Petrilli | : | |
| Application No. 10/957,750 | : | ON PETITION |
| Filed: October 5, 2004 | : | |
| Attorney Docket No. 01045-1005 | : | |

This is a decision on the renewed petition under 37 CFR 1.137(b), filed November 16, 2005, to revive the above-identified application.

The petition is **GRANTED.**

The above-identified application became abandoned for failure to reply in a timely manner to the Notice to File Missing Parts of Application (Notice) mailed January 10, 2005. The Notice set a period for reply of two (2) months from the mail date of the Notice. No extensions of time under the provisions of 37 CFR 1.136(a) were obtained. Accordingly, the above-identified application became abandoned on March 11, 2005.

The petition for extension of time is not accepted. An extension of time under 37 CFR 1.136 must be filed prior to the expiration of the maximum extendable period for reply. See In re Application of S., 8 USPQ2d 1630, 1631 (Comm'r Pats. 1988). Accordingly, since the $1080 extension of time submitted on October 3, 2005 was subsequent to the maximum extendable period for reply, this fee is unnecessary and is being credited to petitioner's credit card.

Telephone inquiries concerning this decision should be directed to Irvin Dingle at (571) 272-3210.

This matter is being referred to the Initial Patent Examination Unit.

Irvin Dingle
Petitions Examiner
Office of Petitions

UNITED STATES PATENT AND TRADEMARK OFFICE

Commissioner for Patents
United States Patent and Trademark Office
P.O. Box 1450
Alexandria, VA 22313-1450
www.uspto.gov

Howard J. Greenwald P.C.
349 W. Commercial Street, Suite 2490
East Rochester, NY 14445-2408

**COPY MAILED**

JUL 28 2006

**OFFICE OF PETITIONS**

| | | |
|---|---|---|
| In re Application of | : | |
| David N. CHILSON | : | |
| Application No. 10/957,765 | : | DECISION ON PETITION |
| Filed: October 4, 2004 | : | TO WITHDRAW |
| Attorney Docket No. DNC-664 | : | FROM RECORD |
| | : | |

This is a decision on the Request to Withdraw as attorney or agent of record under 37 C.F.R. § 1.36(b), filed November 22, 2005.

The request is **NOT APPROVED**.

A grantable request to withdraw as attorney/agent of record must be signed by every attorney/agent seeking to withdraw or contain a clear indication that one attorney is signing on behalf of another/others. A request to withdraw will not be approved unless at least 30 (thirty) days would remain between the date of approval and the later of the expiration date of a time to file a response or the expiration date of the maximum time period which can be extended under 37 C.F.R. § 1.136(a).

The Office cannot approve the request at this time since the reasons provided do not meet any of the conditions under the mandatory or permissive categories enumerated in 37 CFR 10.40. Section 10.40 of Title 37 of the Code of Federal Regulation states, "[a] practitioner shall not withdraw from employment in a proceeding before the Office without permission from the Office[.]" More specifically, 37 CFR 10.40 states, "[i]f paragraph (b) of this section is not applicable, a practitioner may not request permission to withdraw in matter pending before the Office unless such request or such withdrawal is" for one the permissive reasons listed in 37 CFR 10.40(c). The reasons set forth in the request, change of employment of attorney of record, does not meet any of the conditions set forth in 37 CFR 10.40.

All future communications from the Office will continue to be directed to the above-listed address until otherwise notified by applicant.

Telephone inquiries concerning this decision should be directed to Monica Graves at 571-272- 7253.

David Bucci
Petitions Examiner
Office of Petitions

cc: David N. Chilson
14 Arnold Park, Apt. A
Rochester, NY 14607

## SPE RESPONSE FOR CERTIFICATE OF CORRECTION

**Paper No.:** _____

**DATE** : 6-28-09

**TO SPE OF** : ART UNIT 1796

**SUBJECT** : Request for Certificate of Correction for Appl. No.: 10/957782 Patent No.: 7517919.

Please respond to this request for a certificate of correction within 7 days.

**FOR IFW FILES:**

Please review the requested changes/corrections as shown in the **COCIN** document(s) in the IFW application image. No new matter should be introduced, nor should the scope or meaning of the claims be changed.

Please complete the response (see below) and forward the completed response to scanning using document code **COCX**.

**FOR PAPER FILES:**

Please review the requested changes/corrections as shown in the attached certificate of correction. Please complete this form (see below) and forward it with the file to:

**Certificates of Correction Branch (CofC)**
**South Tower - 9A22**
**Palm Location 7580**

**Angela Green**
**Certificates of Correction Branch**
**703-756-1541**

**Thank You For Your Assistance**

**The request for issuing the above-identified correction(s) is hereby:**
Note your decision on the appropriate box.

- ☒ **Approved** — **All** changes apply.
- ☐ **Approved in Part** — Specify below which changes **do not** apply.
- ☐ **Denied** — State the reasons for denial below.

**Comments:** Fig 2 supports the changes to col 20

Susan Berman for James Seidleck . 1796
**SPE** **Art Unit**

UNITED STATES PATENT AND TRADEMARK OFFICE

Commissioner for Patents
United States Patent and Trademark Office
P.O. Box 1450
Alexandria, VA 22313-1450
www.uspto.gov

**CANTOR COLBURN, LLP**
**20 Church Street**
**22nd Floor**
**Hartford CT 06103**

COPY MAILED

MAY 09 2008

| | |
|---|---|
| In re Application of | : |
| Thomas Ebeling et al. | : |
| Application No. 10/957,799 | : DECISION ON PETITION |
| Filed: October 4, 2004 | : UNDER 37 CFR 1.78(a)(3) |
| Attorney Docket No. 148228-1 | : |

This is a decision on the petition under 37 CFR 1.78(a)(3), filed February 15, 2008, to accept an unintentionally delayed claim under 35 U.S.C. § 120 for the benefit of priority to the prior-filed nonprovisional applications set forth in the amendment filed with the petition.

The petition is **GRANTED**.

A petition for acceptance of a claim for late priority under 37 CFR 1.78(a)(3) is only applicable to those applications filed on or after November 29, 2000. Further, the petition is appropriate only after the expiration of the period specified in 37 CFR 1.78(a)(2)(ii). In addition, the petition under 37 CFR 1.78(a)(3) must be accompanied by:

**(1)** the reference required by 35 U.S.C. § 120 and 37 CFR 1.78(a)(2)(i) of the prior-filed application, unless previously submitted;
**(2)** the surcharge set forth in § 1.17(t); and
**(3)** a statement that the entire delay between the date the claim was due under 37 CFR 1.78(a)(2)(ii) and the date the claim was filed was unintentional. The Director may require additional information where there is a question whether the delay was unintentional.

All of the above requirements having been satisfied, the late claim for priority under 35 U.S.C. § 120 is accepted as being unintentionally delayed.

***The granting of the petition to accept the delayed benefit claim to the prior-filed applications under 37 CFR 1.78(a)(3) should not be construed as meaning that this application is entitled to the benefit of the prior-filed applications. In order for this application to be entitled to the benefit of the prior-filed applications, all other requirements under 35 U.S.C. § 120 and 37 CFR 1.78(a)(1) and (a)(2) must be met. Similarly, the fact that the corrected Filing Receipt accompanying this decision on petition includes the prior-filed applications should not be construed as meaning that applicant is entitled to the claim for benefit of priority to the prior-filed applications noted thereon. Accordingly, the examiner will, in due course, consider this benefit claim and determine whether the application is entitled to the benefit of the earlier filing date.***

A corrected Filing Receipt, which includes the priority claim to the prior-filed nonprovisional applications, accompanies this decision on petition.

Any inquiries concerning this decision may be directed to Christopher Bottorff at (571) 272-6692. All other inquiries concerning either the examination procedures or status of the application should be directed to the Technology Center.

This application is being forwarded to Technology Center AU 1796 for processing of the RCE and for appropriate action by the Examiner in the normal course of business on the amendment submitted in accordance with 37 CFR 1.114.

for

David Bucci
Petitions Examiner
Office of Petitions

**ATTACHMENT**: Corrected Filing Receipt

UNITED STATES PATENT AND TRADEMARK OFFICE

UNITED STATES DEPARTMENT OF COMMERCE
United States Patent and Trademark Office
Address: COMMISSIONER FOR PATENTS
P.O. Box 1450
Alexandria, Virginia 22313-1450
www.uspto.gov

| APPLICATION NUMBER | FILING or 371(c) DATE | GRP ART UNIT | FIL FEE REC'D | ATTY.DOCKET.NO | TOT CLAIMS | IND CLAIMS |
|---|---|---|---|---|---|---|
| 10/957,799 | 10/04/2004 | 1796 | 1204 | 148228-1 | 43 | 1 |

**CONFIRMATION NO. 9996**

**CORRECTED FILING RECEIPT**

23413
CANTOR COLBURN, LLP
20 Church Street
22nd Floor
Hartford, CT 06103

*OC000000029753423*

Date Mailed: 05/05/2008

Receipt is acknowledged of this non-provisional patent application. The application will be taken up for examination in due course. Applicant will be notified as to the results of the examination. Any correspondence concerning the application must include the following identification information: the U.S. APPLICATION NUMBER, FILING DATE, NAME OF APPLICANT, and TITLE OF INVENTION. Fees transmitted by check or draft are subject to collection. Please verify the accuracy of the data presented on this receipt. **If an error is noted on this Filing Receipt, please submit a written request for a Filing Receipt Correction. Please provide a copy of this Filing Receipt with the changes noted thereon. If you received a "Notice to File Missing Parts" for this application, please submit any corrections to this Filing Receipt with your reply to the Notice. When the USPTO processes the reply to the Notice, the USPTO will generate another Filing Receipt incorporating the requested corrections**

**Applicant(s)**

Thomas Ebeling, Evansville, IN;
Monica Martinez Marugan, Bergen op Zoom, NETHERLANDS;
Srinivas Siripurapu, Evansville, IN;

**Power of Attorney:** The patent practitioners associated with Customer Number 023413

**Domestic Priority data as claimed by applicant**

This application is a CIP of 10/015,049 11/12/2001 ABN

**Foreign Applications**

**If Required, Foreign Filing License Granted:** 03/16/2005

The country code and number of your priority application, to be used for filing abroad under the Paris Convention, is **US 10/957,799**

**Projected Publication Date:** Not Applicable

**Non-Publication Request:** No

**Early Publication Request:** No

**Title**

Flame retardant thermoplastic polycarbonate compositions, use and method thereof

**Preliminary Class**

524

## PROTECTING YOUR INVENTION OUTSIDE THE UNITED STATES

Since the rights granted by a U.S. patent extend only throughout the territory of the United States and have no effect in a foreign country, an inventor who wishes patent protection in another country must apply for a patent in a specific country or in regional patent offices. Applicants may wish to consider the filing of an international application under the Patent Cooperation Treaty (PCT). An international (PCT) application generally has the same effect as a regular national patent application in each PCT-member country. The PCT process **simplifies** the filing of patent applications on the same invention in member countries, but **does not result** in a grant of "an international patent" and does not eliminate the need of applicants to file additional documents and fees in countries where patent protection is desired.

Almost every country has its own patent law, and a person desiring a patent in a particular country must make an application for patent in that country in accordance with its particular laws. Since the laws of many countries differ in various respects from the patent law of the United States, applicants are advised to seek guidance from specific foreign countries to ensure that patent rights are not lost prematurely.

Applicants also are advised that in the case of inventions made in the United States, the Director of the USPTO must issue a license before applicants can apply for a patent in a foreign country. The filing of a U.S. patent application serves as a request for a foreign filing license. The application's filing receipt contains further information and guidance as to the status of applicant's license for foreign filing.

Applicants may wish to consult the USPTO booklet, "General Information Concerning Patents" (specifically, the section entitled "Treaties and Foreign Patents") for more information on timeframes and deadlines for filing foreign patent applications. The guide is available either by contacting the USPTO Contact Center at 800-786-9199, or it can be viewed on the USPTO website at http://www.uspto.gov/web/offices/pac/doc/general/index.html.

For information on preventing theft of your intellectual property (patents, trademarks and copyrights), you may wish to consult the U.S. Government website, http://www.stopfakes.gov. Part of a Department of Commerce initiative, this website includes self-help "toolkits" giving innovators guidance on how to protect intellectual property in specific countries such as China, Korea and Mexico. For questions regarding patent enforcement issues, applicants may call the U.S. Government hotline at 1-866-999-HALT (1-866-999-4158).

## LICENSE FOR FOREIGN FILING UNDER

## Title 35, United States Code, Section 184

## Title 37, Code of Federal Regulations, 5.11 & 5.15

**GRANTED**

The applicant has been granted a license under 35 U.S.C. 184, if the phrase "IF REQUIRED, FOREIGN FILING LICENSE GRANTED" followed by a date appears on this form. Such licenses are issued in all applications where the conditions for issuance of a license have been met, regardless of whether or not a license may be required as

set forth in 37 CFR 5.15. The scope and limitations of this license are set forth in 37 CFR 5.15(a) unless an earlier license has been issued under 37 CFR 5.15(b). The license is subject to revocation upon written notification. The date indicated is the effective date of the license, unless an earlier license of similar scope has been granted under 37 CFR 5.13 or 5.14.

This license is to be retained by the licensee and may be used at any time on or after the effective date thereof unless it is revoked. This license is automatically transferred to any related applications(s) filed under 37 CFR 1.53(d). This license is not retroactive.

The grant of a license does not in any way lessen the responsibility of a licensee for the security of the subject matter as imposed by any Government contract or the provisions of existing laws relating to espionage and the national security or the export of technical data. Licensees should apprise themselves of current regulations especially with respect to certain countries, of other agencies, particularly the Office of Defense Trade Controls, Department of State (with respect to Arms, Munitions and Implements of War (22 CFR 121-128)); the Bureau of Industry and Security, Department of Commerce (15 CFR parts 730-774); the Office of Foreign AssetsControl, Department of Treasury (31 CFR Parts 500+) and the Department of Energy.

**NOT GRANTED**

No license under 35 U.S.C. 184 has been granted at this time, if the phrase "IF REQUIRED, FOREIGN FILING LICENSE GRANTED" DOES NOT appear on this form. Applicant may still petition for a license under 37 CFR 5.12, if a license is desired before the expiration of 6 months from the filing date of the application. If 6 months has lapsed from the filing date of this application and the licensee has not received any indication of a secrecy order under 35 U.S.C. 181, the licensee may foreign file the application pursuant to 37 CFR 5.15(b).

UNITED STATES PATENT AND TRADEMARK OFFICE

Commissioner for Patents
United States Patent and Trademark Office
P.O. Box 1450
Alexandria, VA 22313-1450
www.uspto.gov

**CANTOR COLBURN, LLP**
**20 CHURCH STREET**
**22ND FLOOR**
**HARTFORD CT 06103**

MAILED

NOV 18 2009

OFFICE OF PETITIONS

| | | |
|---|---|---|
| In re Application of | : | |
| Ebeling et al. | : | |
| Application No. 10/957,799 | : | DECISION ON PETITION |
| Filed: October 4, 2004 | : | |
| Attorney Docket No. 148228-1 | : | |

This is a decision on the petition under the unintentional provisions of 37 CFR 1.137(b), filed September 21, 2009, to revive the above-identified application.

The petition is **DISMISSED**.

Any request for reconsideration of this decision must be submitted within TWO (2) MONTHS from the mail date of this decision. Extensions of time under 37 CFR 1.136(a) are permitted. The reconsideration request should include a cover letter entitled "Renewed Petition under 37 CFR 1.137(b)." This is **not** a final agency action within the meaning of 5 U.S.C. § 704.

The application became abandoned for failure to file a timely reply within the meaning of 37 CFR 1.113 to the final Office action of September 24, 2008. No extensions of time under the provisions of 37 CFR 1.136(a) were timely obtained. Accordingly, the application became abandoned on December 25, 2008. A Notice of Abandonment was mailed April 14, 2009.

A grantable petition under 37 CFR 1.137(b) must be accompanied by: (1) the required reply, unless previously filed; (2) the petition fee as set forth in 37 CFR 1.17(m); (3) a statement that the entire delay in filing the required reply from the due date for the reply until the filing of a grantable petition pursuant to 37 CFR 1.137(b) was unintentional; and (4) any terminal disclaimer (and fee as set forth in 37 CFR 1.20(d)) required by 37 CFR 1.137(d). Where there is a question as to whether either the abandonment or the delay in filing a petition under 37 CFR 1.137 was unintentional, the Director may require additional information. See MPEP 711.03(c)(II)(C) and (D). The instant petition lacks item 1.

Since the amendment submitted does not *prima facie* place the application in condition for allowance, the reply required must be a Notice of Appeal (and appeal fee), RCE, or the filing of a continuing application under 37 CFR 1.53(b).

The Examiner has responded to the Amendment After Final with an Advisory Action (copy enclosed).

Additionally, an extension of time under 37 CFR 1.136 must be filed prior to the expiration of the maximum extendable period for reply. *See* In re Application of S., 8 USPQ2d 1630, 1631 (Comm'r Pats. 1988). Since the $1,110.00, three-month extension of time fee submitted with the petition on September 21, 2009 was subsequent to the maximum extendable period for reply, this fee is unnecessary and will be refunded to petitioner's deposit account in due course.

Further correspondence with respect to this matter should be addressed as follows:

By Mail: Mail Stop PETITION
Commissioner for Patents
P. O. Box 1450
Alexandria, VA 22313-1450

By hand: U. S. Patent and Trademark Office
Customer Service Window, Mail Stop Petitions
Randolph Building
401 Dulany Street
Alexandria, VA 22314

The centralized facsimile number is **(571) 273-8300.**

Telephone inquiries concerning this decision should be directed to Joan Olszewski at (571) 272-7751.

Joan Olszewski
Petitions Examiner
Office of Petitions

Enclosure: Examiner's Advisory

| Advisory Action Before the Filing of an Appeal Brief | Application No. 10/957,799 | Applicant(s) EBELING ET AL. | |
|---|---|---|---|
| | Examiner Peter Szekely | Art Unit 1796 | |

***--The MAILING DATE of this communication appears on the cover sheet with the correspondence address --***

THE REPLY FILED 21 September 2009 FAILS TO PLACE THIS APPLICATION IN CONDITION FOR ALLOWANCE.

1. ☐ The reply was filed after a final rejection, but prior to or on the same day as filing a Notice of Appeal. To avoid abandonment of this application, applicant must timely file one of the following replies: (1) an amendment, affidavit, or other evidence, which places the application in condition for allowance; (2) a Notice of Appeal (with appeal fee) in compliance with 37 CFR 41.31; or (3) a Request for Continued Examination (RCE) in compliance with 37 CFR 1.114. The reply must be filed within one of the following time periods:
   a) ☒ The period for reply expires 6 months from the mailing date of the final rejection.
   b) ☐ The period for reply expires on: (1) the mailing date of this Advisory Action, or (2) the date set forth in the final rejection, whichever is later. In no event, however, will the statutory period for reply expire later than SIX MONTHS from the mailing date of the final rejection.

   Examiner Note: If box 1 is checked, check either box (a) or (b). ONLY CHECK BOX (b) WHEN THE FIRST REPLY WAS FILED WITHIN TWO MONTHS OF THE FINAL REJECTION. See MPEP 706.07(f).

Extensions of time may be obtained under 37 CFR 1.136(a). The date on which the petition under 37 CFR 1.136(a) and the appropriate extension fee have been filed is the date for purposes of determining the period of extension and the corresponding amount of the fee. The appropriate extension fee under 37 CFR 1.17(a) is calculated from: (1) the expiration date of the shortened statutory period for reply originally set in the final Office action; or (2) as set forth in (b) above, if checked. Any reply received by the Office later than three months after the mailing date of the final rejection, even if timely filed, may reduce any earned patent term adjustment. See 37 CFR 1.704(b).

NOTICE OF APPEAL

2. ☐ The Notice of Appeal was filed on _____. A brief in compliance with 37 CFR 41.37 must be filed within two months of the date of filing the Notice of Appeal (37 CFR 41.37(a)), or any extension thereof (37 CFR 41.37(e)), to avoid dismissal of the appeal. Since a Notice of Appeal has been filed, any reply must be filed within the time period set forth in 37 CFR 41.37(a).

AMENDMENTS

3. ☒ The proposed amendment(s) filed after a final rejection, but prior to the date of filing a brief, will not be entered because
   (a) ☐ They raise new issues that would require further consideration and/or search (see NOTE below);
   (b) ☐ They raise the issue of new matter (see NOTE below);
   (c) ☒ They are not deemed to place the application in better form for appeal by materially reducing or simplifying the issues for appeal; and/or
   (d) ☐ They present additional claims without canceling a corresponding number of finally rejected claims.

   NOTE: _____. (See 37 CFR 1.116 and 41.33(a)).
4. ☐ The amendments are not in compliance with 37 CFR 1.121. See attached Notice of Non-Compliant Amendment (PTOL-324).
5. ☐ Applicant's reply has overcome the following rejection(s): _____.
6. ☐ Newly proposed or amended claim(s) _____ would be allowable if submitted in a separate, timely filed amendment canceling the non-allowable claim(s).
7. ☐ For purposes of appeal, the proposed amendment(s): a) ☐ will not be entered, or b) ☐ will be entered and an explanation of how the new or amended claims would be rejected is provided below or appended.

   The status of the claim(s) is (or will be) as follows:
   Claim(s) allowed: _____.
   Claim(s) objected to: _____.
   Claim(s) rejected: _____.
   Claim(s) withdrawn from consideration: _____.

AFFIDAVIT OR OTHER EVIDENCE

8. ☐ The affidavit or other evidence filed after a final action, but before or on the date of filing a Notice of Appeal will not be entered because applicant failed to provide a showing of good and sufficient reasons why the affidavit or other evidence is necessary and was not earlier presented. See 37 CFR 1.116(e).
9. ☐ The affidavit or other evidence filed after the date of filing a Notice of Appeal, but prior to the date of filing a brief, will not be entered because the affidavit or other evidence failed to overcome all rejections under appeal and/or appellant fails to provide a showing a good and sufficient reasons why it is necessary and was not earlier presented. See 37 CFR 41.33(d)(1).
10. ☐ The affidavit or other evidence is entered. An explanation of the status of the claims after entry is below or attached.

REQUEST FOR RECONSIDERATION/OTHER

11. ☒ The request for reconsideration has been considered but does NOT place the application in condition for allowance because: See Continuation Sheet.
12. ☐ Note the attached Information *Disclosure Statement*(s). (PTO/SB/08) Paper No(s). _____
13. ☐ Other: _____.

/Peter Szekely/
Primary Examiner, Art Unit 1796

Continuation of 11. does NOT place the application in condition for allowance because: Mitsuta et al. disclose a siloxane content of 0.5-30% in paragraph 0031 and 26.6% is about 25%. As far as EE 600 196 is concerned references have to be considered for all they disclose and must not be limited to their working examples. In re Mills 176 USPQ (CCPA 1972).

UNITED STATES PATENT AND TRADEMARK OFFICE

Commissioner for Patents
United States Patent and Trademark Office
P.O. Box 1450
Alexandria, VA 22313-1450
www.uspto.gov

**CANTOR COLBURN, LLP**
**20 CHURCH STREET**
**22ND FLOOR**
**HARTFORD CT 06103**

MAILED

APR 08 2010

OFFICE OF PETITIONS

| | | |
|---|---|---|
| In re Application of | : | |
| Ebeling et al. | : | |
| Application No. 10/957,799 | : | DECISION ON PETITION |
| Filed: October 4, 2004 | : | |
| Attorney Docket No. 148228-1 | : | |

This is a decision on the renewed petition under the unintentional provisions of 37 CFR 1.137(b), filed February 5, 2010, to revive the above-identified application.

The petition is **GRANTED**.

The application became abandoned for failure to reply in a timely manner within the meaning of 37 CFR 1.113 to the final Office action mailed September 24, 2008, which set a shortened statutory period for reply of three (3) months. No extensions of time under the provisions of 37 CFR 1.136(a) were timely obtained. Accordingly, the application became abandoned on December 25, 2008. A Notice of Abandonment was mailed April 14, 2009.

The petition satisfies the requirements of 37 CFR 1.137(b) in that petitioner has supplied (1) the reply in the form of a Notice of Appeal and fee of $540.00; (2) the petition fee of $1,620.00 (previously submitted September 21, 2009; and (3) a proper statement of unintentional delay.

**The two-month period for filing an appeal brief under 37 CFR 41.37 (accompanied by the fee required by 37 CFR 41.20(b)(2)), runs from the date of this decision.**

Telephone inquiries concerning this decision should be directed to the undersigned at (571) 272-7751.

This application is being referred to Technology Center AU 1796 to await the filing of an appeal brief or for such other appropriate reply as may be submitted to continue prosecution of the application.

Joan Olszewski

Joan Olszewski
Petitions Examiner
Office of Petitions

UNITED STATES PATENT AND TRADEMARK OFFICE

Commissioner for Patents
United States Patent and Trademark Office
P.O. Box 1450
Alexandria, VA 22313-1450
www.uspto.gov

PRATT & WHITNEY
400 MAIN STREET
MAIL STOP: 132-13
EAST HARTFORD CT 06108

MAILED

APR 27 2009

OFFICE OF PETITIONS

ON PETITION

In re Application of :
Das :
Application No. 10/957,805 :
Filed: October4, 2004 :
Attorney Docket No. EH-11256 :

This is a decision on the petition, filed April 8, 2009, under 37 CFR 1.137(b) to revive the above-identified application.

The above-identified application became abandoned for failure to timely submit a reply within three (3) months of the mailing of the April 21, 2008 final Office action. No response being received and no extensions of time being obtained under 37 CFR 1.136(a), this application became abandoned on July 22, 2008. A Notice of Abandonment was mailed on February 10, 2009.

Applicant has submitted an amendment in reply to the April 21, 2008 final Office action, an acceptable statement of the unintentional nature of the delay in responding to the April 21, 2008 final Office action, and the $1,620.00 petition fee.

The petition is **GRANTED**.

After the mailing of this decision the application will be forwarded to Technology Center AU 1793 for consideration of the amendment filed on April 8, 2009.

Telephone inquiries should be directed to the undersigned at (571) 272-3230.

Shirene Willis Brantley
Senior Petitions Attorney
Office of Petitions

UNITED STATES PATENT AND TRADEMARK OFFICE

Commissioner for Patents
United States Patent and Trademark Office
P.O. Box 1450
Alexandria, VA 22313-1450
www.uspto.gov

**CALFEE HALTER & GRISWOLD, LLP**
**800 SUPERIOR AVENUE**
**SUITE 1400**
**CLEVELAND OH 44114**

**COPY MAILED**

JUN 27 2006

**OFFICE OF PETITIONS**

| | | |
|---|---|---|
| In re Application of | : | |
| James M. Byrne | : | |
| Application No. 10/957,825 | : | DECISION ON PETITION |
| Filed: October 4, 2004 | : | TO WITHDRAW |
| Attorney Docket No. 28283/04007 | : | FROM RECORD |
| | : | |

This is a decision on the Request to Withdraw as attorney or agent of record under 37 C.F.R. § 1.36(b), filed February 10, 2006.

The request is **APPROVED**.

A grantable request to withdraw as attorney/agent of record must be signed by every attorney/agent seeking to withdraw or contain a clear indication that one attorney is signing on behalf of another/others. A request to withdraw will not be approved unless at least 30 (thirty) days would remain between the date of approval and the later of the expiration date of a time to file a response or the expiration date of the maximum time period which can be extended under 37 C.F.R. § 1.136(a).

The request was signed by Joan N. Drew, on behalf of all attorneys of record who are associated with Customer No. **24024**.

All attorneys/agents associated with the Customer Number **24024** have been withdrawn.

Applicant is reminded that there is no attorney of record at this time.

All future correspondence will be directed to the sole inventor at the first-listed address below until otherwise notified by applicant/assignee.

This application is being referred to Technology Center AU 3727.

Telephone inquiries concerning this decision should be directed to the undersigned at (571) 272-3208.

Karen Creasy

Karen Creasy
Petitions Examiner
Office of Petitions

Conferee: cd

cc:
**JAMES M. BYRNE**
**4334 HUNTINGTON WOODS**
**WOOSTER, OH 44691**

**MCNEES, WALLACE & NURICK LLC**
**21 E. STATE STREET**
**17TH FLOOR**
**COLUMBUS OH 43215-4228**

UNITED STATES PATENT AND TRADEMARK OFFICE

Commissioner for Patents
United States Patent and Trademark Office
P.O. Box 1450
Alexandria, VA 22313-1450
www.uspto.gov

**WOODCOCK WASHBURN LLP**
**CIRA CENTRE, 12TH FLOOR**
**2929 ARCH STREET**
**PHILADELPHIA, PA 19104-2891**

**COPY MAILED**

JAN 3 1 2008

**OFFICE OF PETITIONS**

| | | |
|---|---|---|
| In re Application of | : | |
| Jonathan S. CALLE | : | |
| Application No. 10/957,857 | : | DECISION ON PETITION |
| Filed: October 4, 2004 | : | TO WITHDRAW |
| Attorney Docket No. AHS-0007 | : | FROM RECORD |
| | : | |

This is a decision on the Request to Withdraw as attorney or agent of record under 37 C.F.R. § 1.36(b), filed October 25, 2007.

The request is **DISMISSED** as moot.

A review of the file record indicates that the power of attorney to Woodcock Washburn LLP, has been revoked by the assignee of the patent application on December 12, 2007. Accordingly, the request to withdraw under 37 C.F.R. § 1.36(b) is moot.

All future communications from the Office will be directed to the address below.

Telephone inquires concerning this decision should be directed to the undersigned at 571-272-6735.

Diane Goodwyn
Petitions Examiner
Office of Petitions

cc: SYNNESTVEDT & LECHNER, LLP
1101 MARKET STREET
26TH FLOOR
PHILADELPHIA, PA 19107-2950

UNITED STATES PATENT AND TRADEMARK OFFICE

Commissioner for Patents
United States Patent and Trademark Office
P.O. Box 1450
Alexandria, VA 22313-1450
www.uspto.gov

MAILED
FROM DIRECTORS OFFICE

APR 26 2005

TECHNOLOGY CENTER 3600

HOUSTON ELISEEVA
4 MILITIA DRIVE, SUITE 4
LEXINGTON MA 02421

| | | |
|---|---|---|
| In re application of<br>Valentin T. Grebennikov et al.<br>Application No. 10/957,871<br>Filed: October 4, 2004<br>For: DEVICE FOR CUTTING OF SLOT-LIKE KEY SEATS IN WELLS BY A HYDROABRASIVE METHOD | :<br>:<br>:<br>:<br>:<br>:<br>: | **DECISION ON PETITION TO MAKE SPECIAL (APPLICANT'S AGE)** |

This is a decision on the petition submitted on November 4, 2004 under 37 CFR 1.102 (c) to make the above-identified application special under the accelerated examination procedure set forth in MPEP 708.02, Section IV: Applicant's Age.

The petition is **DISMISSED**.

An application may be accorded special status upon the filing of a petition providing evidence showing that the applicant is at least 65 years old. Such a showing may be provided by evidence such as a birth certificate or a statement from the applicant.

The evidence submitted with the petition is a statement signed by Attorney Maria M. Eliseeva indicating that Mr. Grebennikov is at least 65 years of age. The statement must be from the applicant.

**SUMMARY**: Petition to Make Special **DISMISSED**.

Steven N. Meyers
Special Programs Examiner
Technology Center 3600
(571) 272-6611

SNM/dew: 04/19/05

UNITED STATES PATENT AND TRADEMARK OFFICE

Commissioner for Patents
United States Patent and Trademark Office
P.O. Box 1450
Alexandria, VA 22313-1450
www.uspto.gov

MAILED
FROM DIRECTORS OFFICE

JUL 29 2005

TECHNOLOGY CENTER 3600

HOUSTON ELISEEVA
4 MILITIA DRIVE, SUITE 4
LEXINGTON, MA 02421

In re application of
Valentin T. Grebennikov et al.
Application No. 10/957,871
Filed: October 4, 2004
For: DEVICE FOR CUTTING SLOT-LIKE KEY SEATS IN WELLS BY A HYDROABRASIVE METHOD

**DECISION ON PETITION TO MAKE SPECIAL (APPLICANT'S AGE)**

This is a decision on the renewed petition submitted on July 12, 2005 under 37 CFR 1.102 (c) to make the above-identified application special under the accelerated examination procedure set forth in MPEP 708.02, Section IV: Applicant's Age.

The petition is **GRANTED** .

An application may be accorded special status upon the filing of a petition providing evidence showing that the applicant is at least 65 years old. Such a showing may be provided by evidence such as a birth certificate or a statement from the applicant.

The evidence submitted with the petition is a statement signed by Mr. Grebennikov indicating that he is at least 65 years of age.

The examiner is directed (1) to make an interference search for possible interfering applications, (2) to promptly examine this application out of turn, and (3) if any interfering application is discovered, to examine such application simultaneously and state in the first official letter of such application that it is being taken out of turn because of a possible interference.

Petitioner is advised that this application will continue to be special, throughout its entire prosecution and pendency, including interference or appeal, if any, only if petitioner makes a prompt ***bona fide*** effort, in response to each Office action, to place the application in condition for allowance, even if it is necessary to conduct an interview with the examiner to accomplish this purpose.

**SUMMARY**: Petition to Make Special **GRANTED** .

Randolph A. Reese
Special Programs Examiner
Technology Center 3600
(571) 272-6619

RAR/dew: 07/29/05

UNITED STATES PATENT AND TRADEMARK OFFICE

Commissioner for Patents
United States Patent and Trademark Office
P.O. Box 1450
Alexandria, VA 22313-1450
www.uspto.gov

MAILED
FROM DIRECTORS OFFICE

JUL 19 2005

TECHNOLOGY CENTER 3600

HOUSTON ELISEEVA
4 MILITIA DRIVE, SUITE 4
LEXINGTON, MA 02421

| | | |
|---|---|---|
| In re application of<br>Valentin T. Grebennikov et al.<br>Application No. 10/957,872<br>Filed: October 4, 2004<br>For: METHOD OF INCREASING THE WELL RATE OF EXPLOITATION AND RECHARGE WELLS | : | **DECISION ON PETITION TO MAKE SPECIAL (APPLICANT'S AGE)** |

This is a decision on the petition submitted on July 12, 2005 under 37 CFR 1.102 (c) to make the above-identified application special under the accelerated examination procedure set forth in MPEP 708.02, Section IV: Applicant's Age.

The petition is **GRANTED** .

An application may be accorded special status upon the filing of a petition providing evidence showing that the applicant is at least 65 years old. Such a showing may be provided by evidence such as a birth certificate or a statement from the applicant.

The evidence submitted with the petition is a declaration signed by Mr. Grebennikov indicating that he is at least 65 years of age.

The examiner is directed (1) to make an interference search for possible interfering applications, (2) to promptly examine this application out of turn, and (3) if any interfering application is discovered, to examine such application simultaneously and state in the first official letter of such application that it is being taken out of turn because of a possible interference.

Petitioner is advised that this application will continue to be special, throughout its entire prosecution and pendency, including interference or appeal, if any, only if petitioner makes a prompt ***bona fide*** effort, in response to each Office action, to place the application in condition for allowance, even if it is necessary to conduct an interview with the examiner to accomplish this purpose.

**SUMMARY**: Petition to Make Special **GRANTED** .

Steven N. Meyers
Special Programs Examiner
Technology Center 3600
(571) 272-6611

SNM/dew: 07/15/05

UNITED STATES PATENT AND TRADEMARK OFFICE

COMMISSIONER FOR PATENTS
UNITED STATES PATENT AND TRADEMARK OFFICE
P.O. BOX 1450
ALEXANDRIA, VA 22313-1450
www.uspto.gov

COPY MAILED
NOV 16 2006
OFFICE OF PETITIONS

Pauley Petersen & Erickson
Suite 365
2800 West Higgins Road
Hoffman Estates, IL 60195

In re Application of :
Leroy Dean Chapman :
Application No. 10/957,884 : ON PETITION
Filed: October 4, 2004 :
Attorney Docket No. IIT-197 :

This is a decision on the petition under 37 CFR 1.137(b), filed July 27, 2006, to revive the above-identified application.

The petition is **DISMISSED**.

The application became abandoned for failure to reply to the non-final Office action mailed September 9, 2005. A Notice of Abandonment was mailed on May 16, 2006.

A grantable petition to revive an abandoned application under 37 CFR 1.137(b) must be accompanied by: (1) the required reply (unless previously filed), which may met by the filing of a continuing application in a nonprovisional application abandoned for failure to prosecute, but must be the payment of the issue fee or any outstanding balance thereof in an application or patent, abandoned or lapsed for failure to pay the issue fee or any portion thereof; (2) the petition fee required by 37 CFR 1.17(m); (3) a statement that the entire delay in filing the required reply from the due date for the reply until the filing of a grantable petition pursuant to 37 CFR 1.137(b) was unintentional; and (4) a terminal disclaimer (and fee as set forth in 37 CFR 1.20(d)). This petition lacks item (3) above.

The statement of unintentional delay cannot be accepted, since it appears that the instant petition is signed/filed on behalf of the assignee and fails to comply with the requirements of 37 CFR 3.73(b). 37 CFR 3.73(b) provides that: (1) when an assignee seeks to take action in a matter before the Office, the assignee must establish its ownership of the property to the satisfaction of the Commissioner; (2) ownership is established by submitting to the Office, in the Office file related to the matter in which action is sought to be taken, documentary evidence of a chain of title from the original owner to the assignee (*e.g.*, copy of an executed assignment submitted for recording) or by specifying (*e.g.*, reel and frame number) where such evidence is recorded in the Office; (3) the submission establishing ownership must be signed by a party authorized to act on behalf of the assignee; and (4) documents submitted to establish ownership may be required to be recorded as a condition to permitting the assignee to take action in a matter pending before the Office. A blank Statement under 37 CFR 3.73(b) is enclosed with this decision on petition.

A courtesy copy of this decision is being mailed to petitioner, using the address listed on the instant petition. Thereafter, all future correspondence will be mailed to the address of record until otherwise instructed.

Any request for reconsideration must be submitted within **TWO (2) MONTHS** from the mail date of this decision. Extensions of time under 37 CFR 1.136(a) are permitted. The reconsideration request should include a cover letter entitled "Renewed Petition under 37 CFR 1.137(b)." Petitioner is advised that this is **not** a final agency decision.

Further correspondence with respect to this matter should be addressed as follows:

**By Mail**: Mail Stop PETITIONS
Commissioner for Patents
Post Office Box 1450
Alexandria, VA 22313-1450

**By Hand**: Customer Service Window
Randolph Building
401 Dulany Street
Alexandria, VA 22314

**By Fax**: (571) 273-8300
ATTN: Office of Petitions

Any questions concerning this matter may be directed to the undersigned at (571) 272-3226.

Andrea Smith
Petitions Examiner
Office of Petitions

Enclosure: Privacy Act Statement
Blank Statement under 37 CFR 3.73(b)

cc: Robert F. Anderson (Director)
Technology Transfer and Intellectual Property
Illinois institute of Technology
3301 South Dearborn, Siegel Hall, Room #103
Chicago, IL 60616

# Privacy Act Statement

The **Privacy Act of 1974 (P.L. 93-579)** requires that you be given certain information in connection with your submission of the attached form related to a patent application or patent. Accordingly, pursuant to the requirements of the Act, please be advised that: (1) the general authority for the collection of this information is 35 U.S.C. 2(b)(2); (2) furnishing of the information solicited is voluntary; and (3) the principal purpose for which the information is used by the U.S. Patent and Trademark Office is to process and/or examine your submission related to a patent application or patent. If you do not furnish the requested information, the U.S. Patent and Trademark Office may not be able to process and/or examine your submission, which may result in termination of proceedings or abandonment of the application or expiration of the patent.

The information provided by you in this form will be subject to the following routine uses:

1. The information on this form will be treated confidentially to the extent allowed under the Freedom of Information Act (5 U.S.C. 552) and the Privacy Act (5 U.S.C 552a). Records from this system of records may be disclosed to the Department of Justice to determine whether disclosure of these records is required by the Freedom of Information Act.
2. A record from this system of records may be disclosed, as a routine use, in the course of presenting evidence to a court, magistrate, or administrative tribunal, including disclosures to opposing counsel in the course of settlement negotiations.
3. A record in this system of records may be disclosed, as a routine use, to a Member of Congress submitting a request involving an individual, to whom the record pertains, when the individual has requested assistance from the Member with respect to the subject matter of the record.
4. A record in this system of records may be disclosed, as a routine use, to a contractor of the Agency having need for the information in order to perform a contract. Recipients of information shall be required to comply with the requirements of the Privacy Act of 1974, as amended, pursuant to 5 U.S.C. 552a(m).
5. A record related to an International Application filed under the Patent Cooperation Treaty in this system of records may be disclosed, as a routine use, to the International Bureau of the World Intellectual Property Organization, pursuant to the Patent Cooperation Treaty.
6. A record in this system of records may be disclosed, as a routine use, to another federal agency for purposes of National Security review (35 U.S.C. 181) and for review pursuant to the Atomic Energy Act (42 U.S.C. 218(c)).
7. A record from this system of records may be disclosed, as a routine use, to the Administrator, General Services, or his/her designee, during an inspection of records conducted by GSA as part of that agency's responsibility to recommend improvements in records management practices and programs, under authority of 44 U.S.C. 2904 and 2906. Such disclosure shall be made in accordance with the GSA regulations governing inspection of records for this purpose, and any other relevant (*i.e.*, GSA or Commerce) directive. Such disclosure shall not be used to make determinations about individuals.
8. A record from this system of records may be disclosed, as a routine use, to the public after either publication of the application pursuant to 35 U.S.C. 122(b) or issuance of a patent pursuant to 35 U.S.C. 151. Further, a record may be disclosed, subject to the limitations of 37 CFR 1.14, as a routine use, to the public if the record was filed in an application which became abandoned or in which the proceedings were terminated and which application is referenced by either a published application, an application open to public inspection or an issued patent.
9. A record from this system of records may be disclosed, as a routine use, to a Federal, State, or local law enforcement agency, if the USPTO becomes aware of a violation or potential violation of law or regulation.

PTO/SB/96 (09-06)
Approved for use through 03/31/2007. OMB 0651-0031
U.S. Patent and Trademark Office; U.S. DEPARTMENT OF COMMERCE
Under the Paperwork Reduction Act of 1995, no persons are required to respond to a collection of information unless it displays a valid OMB control number.

# STATEMENT UNDER 37 CFR 3.73(b)

Applicant/Patent Owner: _____

Application No./Patent No.: _____ Filed/Issue Date: _____

Entitled:

_____, a _____
(Name of Assignee) (Type of Assignee, e.g., corporation, partnership, university, government agency, etc.)

states that it is:

1. ☐ the assignee of the entire right, title, and interest; or

2. ☐ an assignee of less than the entire right, title and interest
(The extent (by percentage) of its ownership interest is _____%)

in the patent application/patent identified above by virtue of either:

A. ☐ An assignment from the inventor(s) of the patent application/patent identified above. The assignment was recorded in the United States Patent and Trademark Office at Reel _____, Frame _____, or for which a copy thereof is attached.

**OR**

B. ☐ A chain of title from the inventor(s), of the patent application/patent identified above, to the current assignee as follows:

1. From: _____ To: _____
The document was recorded in the United States Patent and Trademark Office at
Reel _____, Frame _____, or for which a copy thereof is attached.

2. From: _____ To: _____
The document was recorded in the United States Patent and Trademark Office at
Reel _____, Frame _____, or for which a copy thereof is attached.

3. From: _____ To: _____
The document was recorded in the United States Patent and Trademark Office at
Reel _____, Frame _____, or for which a copy thereof is attached.

☐ Additional documents in the chain of title are listed on a supplemental sheet.

☐ As required by 37 CFR 3.73(b)(1)(i), the documentary evidence of the chain of title from the original owner to the assignee was, or concurrently is being, submitted for recordation pursuant to 37 CFR 3.11.

[NOTE: A separate copy (*i.e.*, a true copy of the original assignment document(s)) must be submitted to Assignment Division in accordance with 37 CFR Part 3, to record the assignment in the records of the USPTO. See MPEP 302.08]

The undersigned (whose title is supplied below) is authorized to act on behalf of the assignee.

| | |
|---|---|
| _____ | _____ |
| Signature | Date |
| _____ | _____ |
| Printed or Typed Name | Telephone Number |
| _____ | |
| Title | |

This collection of information is required by 37 CFR 3.73(b). The information is required to obtain or retain a benefit by the public which is to file (and by the USPTO to process) an application. Confidentiality is governed by 35 U.S.C. 122 and 37 CFR 1.11 and 1.14. This collection is estimated to take 12 minutes to complete, including gathering, preparing, and submitting the completed application form to the USPTO. Time will vary depending upon the individual case. Any comments on the amount of time you require to complete this form and/or suggestions for reducing this burden, should be sent to the Chief Information Officer, U.S. Patent and Trademark Office, U.S. Department of Commerce, P.O. Box 1450, Alexandria, VA 22313-1450. DO NOT SEND FEES OR COMPLETED FORMS TO THIS ADDRESS. **SEND TO: Commissioner for Patents, P.O. Box 1450, Alexandria, VA 22313-1450.**

*If you need assistance in completing the form, call 1-800-PTO-9199 and select option 2.*

UNITED STATES PATENT AND TRADEMARK OFFICE

COMMISSIONER FOR PATENTS
UNITED STATES PATENT AND TRADEMARK OFFICE
P.O. BOX 1450
ALEXANDRIA, VA 22313-1450
www.uspto.gov

Pauley Petersen & Erickson
Suite 365
2800 West Higgins Road
Hoffman Estates, IL 60195

**COPY MAILED**

JUN 13 2007

**OFFICE OF PETITIONS**

| | | |
|---|---|---|
| In re Application of<br>Leroy Dean Chapman<br>Application No. 10/957,884<br>Filed: October 4, 2004<br>Attorney Docket No. IIT-197 | :<br>:<br>:<br>:<br>: | ON PETITION |

This is a decision on the renewed petition under 37 CFR 1.137(b), filed December 19, 2006, to revive the above-identified application.

The petition satisfies the requirements of 37 CFR 1.137(b), in that, petitioner has supplied (1) the reply in the form of an amendment; (2) the petition fee of $750; and (3) an adequate statement of unintentional delay. Therefore, the petition is **GRANTED**.

This application file is being referred to Technology Center Art Unit 2882, for review of the amendment filed on July 27, 2006.

Any questions concerning this matter may be directed to the undersigned at (571) 272-3226.

Andrea Smith
Petitions Examiner
Office of Petitions

UNITED STATES PATENT AND TRADEMARK OFFICE

UNITED STATES DEPARTMENT OF COMMERCE
United States Patent and Trademark Office
Address: COMMISSIONER FOR PATENTS
P.O. Box 1450
Alexandria, Virginia 22313-1450
www.uspto.gov

KNOBLE, YOSHIDA & DUNLEAVY
EIGHT PENN CENTER
SUITE 1350, 1628 JOHN F KENNEDY BLVD
PHILADELPHIA, PA 19103

Mail Date: 04/21/2010

| | | |
|---|---|---|
| **Applicant** | : Michael L. Price | : DECISION ON REQUEST FOR |
| **Patent Number** | : 7637384 | : RECALCULATION of PATENT |
| **Issue Date** | : 12/29/2009 | : TERM ADJUSTMENT IN VIEW |
| **Appliction No** | : 10/957,924 | : OF WYETH AND NOTICE OF INTENT TO |
| **Filed** | : 10/04/2004 | : ISSUE CERTIFICATE OF CORRECTION |
| | | : |

The Request for Recalculation is **GRANTED** to the extent indicated.

The patent term adjustment has been determined to be **725** days. The USPTO will *sua sponte* issue a certificate of correction reflecting the amount of PTA days determined by the recalculation.

Prior to the issuance of the certificate of correction, the USPTO will afford patentee an opportunity to be heard and request reconsideration. Accordingly, patentee has **one month or thirty (30) days**, whichever is longer, to file a request for reconsideration of this patent term adjustment calculation. See 35 U.S.C. 154(b)(3)(B)(ii) and 37 CFR 1.322(a)(4). No extensions of time will be granted under 37 CFR 1.136.

Patentee should use document code PET.OP if electronically filing a request for reconsideration of this patent term adjustment calculation. The patentee must also include the information required by 37 CFR 1.705(b)(2) and the fee required by 37 CFR 1.18(e). If patentee does not file a timely request for reconsideration of this patent term adjustment calculation including the information required by 37 CFR 1.705(b)(2) and the fee required by 37 CFR 1.18(e), the USPTO will issue a certificate of correction reflecting the PTA determination noted above.

Patentee should be aware that in order to preserve the right to review in the United States District Court for the District of Columbia of the USPTO patent term adjustment determination, patentee must ensure that he or she also take the steps required under 35 U.S.C. 154(b)(4)(A) in a timely manner. Nothing in the request for recalculation should be construed as providing an alternative time frame for commencing a civil action under 35 U.S.C. 154(b)(4)(A).

Any questions concerning this decision should be directed to the Office of Patent Legal Administration at 571-272-7702.

UNITED STATES PATENT AND TRADEMARK OFFICE

COMMISSIONER FOR PATENTS
UNITED STATES PATENT AND TRADEMARK OFFICE
P.O. BOX 1450
ALEXANDRIA, VA 22313-1450
www.uspto.gov

FISH & RICHARDSON PC
P.O. BOX 1022
MINNEAPOLIS, MN 55440-1022

**COPY MAILED**

FEB 14 2006

**OFFICE OF PETITIONS**

ON PETITION

In re Application of
Gunther Waitl, et al.
Application No. 10/957,927
Filed: October 4, 2004
Atty Docket No.: 12406-074003 / 1998P1998

This is a decision on the petition, filed February 6, 2006, under 37 CFR 1.313(c)(2) to withdraw the above-identified application from issue after payment of the issue fee.

The petition is **GRANTED**.

The above-identified application is withdrawn from issue for consideration of a submission under 37 CFR 1.114 (request for continued examination). See 37 CFR 1.313(c)(2).

***Petitioner is advised that the issue fee paid on January 19, 2006, in the above-identified application, cannot be refunded. If, however, the above-identified application is again allowed, petitioner may request that it be applied towards the issue fee required by the new Notice of Allowance.*** [1]

It is noted that the address given on the petition differs from the address of record. If appropriate, a change of address should be filed in this case in accordance with MPEP 601.03. A courtesy copy of this decision is being mailed to the address noted on the petition. However, until otherwise instructed, all future correspondence regarding this application will be mailed solely to the address of record.

Telephone inquiries relating to this decision should be directed to the undersigned at (571) 272-3204.

[1]The request to apply the issue fee to the new Notice may be satisfied by completing and returning the new Issue Fee Transmittal Form PTOL-85(b), which includes the following language thereon: " Commissioner for Patents is requested to apply the Issue Fee and Publication Fee (if any) or re-apply any previously paid issue fee to the application identified above." Petitioner is advised that, whether a fee is indicated as being due or not, the Issue Fee Transmittal Form **must** be completed and timely submitted to avoid abandonment. Note the language in bold text on the first page of the Notice of Allowance and Fee(s) Due (PTOL-85).

The application is being referred to Technology Center AU 2823 for further processing of the request for continued examination under 37 CFR 1.114.

Sherry D. Brinkley
Petitions Examiner
Office of Petitions

cc: FISH & RICHARSON, P.C.
225 FRANKLIN STREET
BOSTON, MA 02110

UNITED STATES PATENT AND TRADEMARK OFFICE

Commissioner for Patents
United States Patent and Trademark Office
P.O. Box 1450
Alexandria, VA 22313-1450
www.uspto.gov

**Hamilton, Brook, Smith & Reynolds, P.C.**
**530 Virginia Road**
**P.O. Box 9133**
**Concord, MA 010742-9133**

**COPY MAILED**

JUN 1 8 2007

**OFFICE OF PETITIONS**

| | | |
|---|---|---|
| In re Application of | : | |
| Antoine J. Rouphael et al. | : | |
| Application No. 10/957,928 | : | DECISION ON PETITION |
| Filed: October 4, 2004 | : | TO WITHDRAW |
| Attorney Docket No. TAN-2-1497.02.US | : | FROM RECORD |
| | : | |

This is a decision on the Request to Withdraw as attorney or agent of record under 37 C.F.R. § 1.36(b), filed December 11, 2006.

The request is **NOT APPROVED** as moot.

A review of the file record indicates that the power of attorney to Hamilton, Brook, Smith & Reynolds, P.C. has been revoked by the assignee of the patent application on April 26, 2007. Accordingly, the request to withdraw under 37 C.F.R. § 1.36(b) is moot.

All future communications from the Office will continue to be directed to the below-listed address until otherwise notified by applicant.

Telephone inquires concerning this decision should be directed to Terri Williams at 571-272-2991.

Terri Williams
Petitions Examiner
Office of Petitions

cc: **Volpe and Koeing, P.C.**
**Dept. ICC**
**United Plaza, Suite 1600**
**30 South 17th Street**
**Philadelphia, PA 19103**

UNITED STATES PATENT AND TRADEMARK OFFICE

Commissioner for Patents
United States Patent and Trademark Office
P.O. Box 1450
Alexandria, VA 22313-1450
www.uspto.gov

GAUTHIER & CONNORS, LLP
225 FRANKLIN STREET
SUITE 2300
BOSTON, MA 02110

COPY MAILED

JUN 18 2008

OFFICE OF PETITIONS

In re Application of :
Ying Sun, et al. :
Application No. 10/957,930 : DECISION ON PETITION
Filed: October 4, 2004 :
Attorney Docket No. 6560 :

This is a decision on the petition, filed March 11, 2008, to revive the above-identified application under the provisions of 37 CFR 1.137(b).

The petition is **GRANTED**.

The application became abandoned for failure to reply in a timely manner to the Office action under Ex parte Quayle, 1935 Dec. Comm'r Pat. 11 (1935), mailed September 10, 2007, which set a shortened statutory period for reply of two (2) months. No extension of time under the provisions of 37 CFR 1.136(a) was obtained. Accordingly, the application became abandoned on November 11, 2007. A Notice of Abandonment was subsequently mailed on March 19, 2008.

The petition satisfies the requirements of 37 CFR 1.137(b) in that petitioner has supplied (1) the reply in the form of amendment, (2) the petition fee of $770, and (3) an adequate statement of unintentional delay.

This application is being referred to Technology Center AU 3762 for further processing in accordance with this decision on petition.

Telephone inquiries concerning this decision may be directed to the undersigned at (571) 272-3204. All other inquiries regarding this application should be directed to the Technology Center.

Sherry D. Brinkley
Petitions Examiner
Office of Petitions

UNITED STATES PATENT AND TRADEMARK OFFICE

COMMISSIONER FOR PATENTS
UNITED STATES PATENT AND TRADEMARK OFFICE
P.O. BOX 1450
ALEXANDRIA, VA 22313-1450
www.uspto.gov

MAIL

DEC 0 2 2004

DIRECTOR OFFICE
TECHNOLOGY CENTER 2600

KAPLAN & GILMAN , L.L.P.
900 ROUTE 9 NORTH
WOODBRIDGE NJ 07095

In re Application of
Ernest L. TRAMMELL, et al.
Application No. 10/957,936
Filed: October 4, 2004
For: METHODS AND APPARATUS FOR SUB-HARMONIC GENERATION, STEREO EXPANSION AND DISTORTION

DECISION ON PETITION TO MAKE SPECIAL

This is a decision on the petition to make special filed October 28, 2004 under Manual of Patent Examination Procedure §708.02, VIII requesting accelerated examination.

The petition under Manual of Patent Examination Procedure §708.02, VIII, must:
(1) be filed prior to receiving any examination by the examiner,
(2) be accompanied by the required fee- $130,
(3) the claims should be directed to a single invention (if it is determined that the claims pertain to more than one invention, then applicant will have to make an election without traverse or forfeit accelerated examination status),
(4) state that a pre-examination search was made, and fully discuss the search method employed, such as classes and subclasses searched, publications, Chemical abstracts, patents, etc. A search made by a foreign patent office satisfies this requirement,
(5) be accompanied by a copy of each of the references most closely related to the subject matter encompassed by the claims if said references are not already of record,
(6) fully discuss the references, pointing out with the particularity required by 37 C.F.R. §1.111 (b) and (c), how the claimed subject matter is patentable over the references.

The petition meets all the above-listed requirements. Accordingly, the petition is **GRANTED**.

The application will retain its special status throughout its entire prosecution, including any appeal to the Board of Patent Appeals and Interferences, subject only to diligent prosecution by the applicant. The application file is being forwarded to the examiner for appropriate action in due course.

Kenneth A. Wieder
Special Program Examiner
Technology Center 2600
Communications

UNITED STATES PATENT AND TRADEMARK OFFICE

Commissioner for Patents
United States Patent and Trademark Office
P.O. Box 1450
Alexandria, VA 22313-1450
www.uspto.gov

**KAPLAN GILMAN GIBSON & DERNIER L.L.P.**
**900 ROUTE 9 NORTH**
**WOODBRIDGE NJ 07095**

COPY MAILED

MAR 3 1 2006

OFFICE OF PETITIONS

| | | |
|---|---|---|
| In re Application of | : | |
| Coats et al. | : | |
| Application No. 10/957,936 | : | ON PETITION |
| Filed: October 4, 2004 | : | |
| Attorney Docket No. 509/6X2 | : | |

This is a decision on the petition under 37 CFR 1.182, filed November 3, 2005, to change the order of the names of the inventors.

The petition is **DISMISSED**.

Petitioner submitted $130.00 towards payment of the petition fee. However, the fee is actually $400.00. An attempt was made on March 28, 2006, to charge the additional $270.00. However, there were insufficient funds in Deposit Account 11-0223.

Further correspondence with respect to this matter should be addressed as follows:

By mail: Mail Stop PETITIONS
Commissioner for Patents
Post Office Box 1450
Alexandria, VA 22313-1450

By hand: Customer Window located at:
U.S. Patent and Trademark Office
Customer Service Window Randolph Building
401 Dulany Street
Alexandria, VA 22314

By fax: (571) 273-8300
ATTN: Office of Petitions

Telephone inquiries should be directed to Petitions Examiner Liana Chase at (571) 272-3206.

Liana Chase for
Frances Hicks
Petitions Examiner
Office of Petitions

UNITED STATES PATENT AND TRADEMARK OFFICE

Commissioner for Patents
United States Patent and Trademark Office
P.O. Box 1450
Alexandria, VA 22313-1450
www.uspto.gov

Andrew G. Rozycki
Cardinal Health, Inc.
7000 Cardinal Place
Dublin, OH 43017

**COPY MAILED**

SEP 05 2007

**OFFICE OF PETITIONS**

In re Application of Brewer et al. :
Application No. 10/957,947 : Decision on Petition
Filing Date: July 1, 2003 :
Attorney Docket No. RPS6042C2-US :

This is a decision on the "Petition Under 37 CFR §§ 1.136(a) and 1.183" filed June 21, 2007.

Petitioner requests the Office accept a Revocation Of Power of Attorney and accept a new Power of Attorney despite the papers failing to include the signature of inventor Francesca Brewer.

On August 14, 2007, petitioner filed a paper requesting withdrawal of the petition filed June 21, 2007. Therefore, the petition is **dismissed**.

The petition fee of $400 has been credited back to deposit account number 19-4709.

If the person signing the instant petition desires to receive future correspondence regarding this application, the appropriate power of attorney or authorization of agent must be submitted. While a courtesy copy of this decision is being mailed to the person signing the instant petition, all future correspondence will be directed solely to the address currently of record until such time as appropriate instructions are received to the contrary.

Technology Center Art Unit 1614 will be informed of the instant decision and the application will be further examined in due course.

Telephone inquiries regarding this communication should be directed to Petitions Attorney Steven Brantley at (571) 272-3203.

Charles Steven Brantley
Senior Petitions Attorney
Office of Petitions

cc: Steven B. Pokotilow
Strook & Strook & Lavan LLP
180 Maiden Lane
New York, NY 10038

UNITED STATES PATENT AND TRADEMARK OFFICE

Commissioner for Patents
United States Patent and Trademark Office
P.O. Box 1450
Alexandria, VA 22313-1450
www.uspto.gov

RICHARD L. HUFF
19304 OLNEY MILL ROAD
OLNEY, MD 20832

COPY MAILED

JUN 25 2007

OFFICE OF PETITIONS

ON PETITION

In re Application of :
Glen Allen Yarbrough et al :
Application No. 10/957,949 :
Filed: October 4, 2004 :
Attorney Docket No. YARB100 :

This is a decision on the petition filed February 12, 2007 under 37 CFR 1.137(b), to revive the above-identified application.

The petition is **GRANTED.**

The above-identified application became abandoned for failure to submit the formal drawings in a timely manner in reply to the Notice of Allowance mailed October 4, 2006, which set a statutory period for reply of three (3) months. Accordingly, the above-identified application became abandoned on January 5, 2007.

The petition satisfies the conditions for revival pursuant to the provisions of 37 CFR 1.137(b) in that (1) the reply in the form of the formal drawings; (2) the petition fee; and (3) the required statement of unintentional delay have been received. Accordingly, the issue fee is accepted as having been unintentionally delayed.

Telephone inquiries concerning this decision should be directed to the undersigned at (571) 272-3210.

This matter is being referred to the Publishing Division for further processing.

Irvin Dingle
Petitions Examiner
Office of Petitions

UNITED STATES DEPARTMENT OF COMMERCE
**Patent and Trademark Office**
ASSISTANT SECRETARY OF COMMERCE AND
COMMISSIONER OF PATENTS AND TRADEMARKS
Washington, DC 20231

1/17/08

Patent No. :7246406
Inventor(s) : Yarbrough et al.
Issued : 7/24/2007
Title : DUST COLLECTION SYSTEM
Atty.doc./File No.

Request for Certificates of Correction

Consideration has been given to your request for the issuance of a Certificate of Correction, for the above – identified patent under the provisions of CFR 1.322.

Inspection of the application for the patent reveals that Col. 1 lines 45-54. Therefore being no fault on the Patent and Trademark Office, It has no authority to issue a certificate of correction under the provision of 1.322.

In view of the forgoing, your request in this matter, is hereby denied.

Future written correspondence concerning this matter should be filed and directed to Decisions & Certificates of Correction Branch.

Henry Randall
Cecelia Newman
Decisions & Certificates
of Correction Branch
(703) 308-9390 Ext. 108

RICHARD L. HUFF
19304 OLNEY MILL ROAD
OLNEY, MD 20832

HR/CBN

UNITED STATES PATENT AND TRADEMARK OFFICE

Commissioner for Patents
United States Patent and Trademark Office
P.O. Box 1450
Alexandria, VA 22313-1450
www.uspto.gov

RAGGIO & DINNIN, P.C.
2701 CAMBRIDGE COURT, STE. 410
AUBURN HILLS MI 48326

**COPY MAILED**

JUN 2 3 2008

**OFFICE OF PETITIONS**

| | | |
|---|---|---|
| In re Application of | : | |
| O'BOYLE et al. | : | LETTER REGARDING PATENT |
| Application No. 10/957,968 | : | TERM ADJUSTMENT |
| Filed: October 4, 2004 | : | |
| Attorney Docket No. 5701.01287 | : | |

This letter is in response to the "Letter Under MPEP 2733 Advising that Patent Term Adjustment is Longer Than Expected," filed February 5, 2008. Pursuant to applicants' duty of good faith and candor to the Office, applicants request that the determination of patent term adjustment under 35 U.S.C. 154(b) be reviewed for accuracy. Applicants state that the patent term adjustment should be corrected from 346 days to 340 days.

The request for review of the initial Determination of Patent Term Adjustment is **granted**.

The Office has updated the PAIR screen to reflect that the correct Patent Term Adjustment (PTA) determination at the time of the mailing of the notice of allowance is **340 days**. A copy of the updated PAIR screen, showing the correct determination, is enclosed.

On November 5, 2007, the Office mailed the Determination of Patent Term Adjustment under 35 U.S.C. 154(b) in the above-identified application. The Notice stated that the patent term adjustment to date is 346 days. On February 5, 2008, applicants submitted the instant comment.

Applicants request that the Office recalculate the period of patent term adjustment. Specifically, applicants direct the Office's attention to the supplemental reply in the form of an

Information Disclosure Statement (IDS) received by the USPTO on August 21, 2007.

A review of the application history confirms that applicants should have been assessed a delay of 6 days pursuant to 37 CFR 1.704(c)(8). It is undisputed that after filing the initial response on August 15, 2007, applicants filed an IDS on August 21, 2007. The record does not support a conclusion that the examiner expressly requested the IDS. Further, a review of the IDS, filed August 21, 2007, reveals that applicants did not include a statement under 37 CFR 1.704(d).[4] Thus, applicants failed to engage in reasonable efforts to conclude prosecution of the application. The period of adjustment should have been reduced by 6 days, the number of days beginning on the day after the date the initial reply was filed, August 16, 2007, and ending on the date that the supplemental reply was filed, August 21, 2007. See 37 CFR 1.704(c)(8).

In view thereof, the correct patent term adjustment at the time of the mailing of the notice of allowance is **340 days** (438 days of Office delay - 98 days of applicant delay).

As this letter was submitted as an advisement to the Office of an error in applicants' favor, the Office will not assess the $200.00 fee as set forth in 37 CFR 1.18(e). The Office thanks applicants for their good faith and candor in bringing this to the attention of the Office.

Applicants are reminded that any delays by the Office pursuant to 37 CFR 1.702(a)(4) and 1.702(b) and any applicant delays under 37 CFR 1.704(c)(10) will be calculated at the time of the

---

[4] Pursuant to 37 CFR 1.704(d):

> A paper containing only an information disclosure statement in compliance with §§ 1.97 and 1.98 will not be considered a failure to engage in reasonable efforts to conclude prosecution (processing or examination) of the application under paragraphs (c)(6), (c)(8), (c)(9), or (c)(10) of this section if it is accompanied by a statement that each item of information contained in the information disclosure statement was first cited in any communication from a foreign patent office in a counterpart application and that this communication was not received by any individual designated in § 1.56(c) more than thirty days prior to the filing of the information disclosure statement. This thirty-day period is not extendable.

issuance of the patent and applicants will be notified in the Issue Notification letter that is mailed to applicant approximately three weeks prior to issuance.

The Office of Data Management has been advised of this decision. This matter is being referred to the Office of Data Management for issuance of the patent.

Telephone inquiries regarding this matter should be directed to Christina Tartera Donnell, Senior Petitions Attorney, at (571) 272-3211.

Kery A. Fries

Kery A. Fries
Senior Legal Advisor
Office of Patent Legal Administration
Office of the Deputy Commissioner
For Patent Examination Policy

Enclosure: Copy of updated PAIR screen

Day : Friday
Date: 6/20/2008

PALM INTRANET

Time: 14:17:42

| PTA Calculations for Application: 10/957968 | | | |
|---|---|---|---|
| Application Filing Date: | 10/04/2004 | PTO Delay (PTO): | 438 |
| Issue Date of Patent: | | Three Years: | 0 |
| Pre-Issue Petitions: | 0 | Applicant Delay (APPL): | 92 |
| Post-Issue Petitions: | 0 | Total PTA (days): | 340 |
| PTO Delay Adjustment: | -6 | | |

**File Contents History**

| Number | Date | Contents Description | PTO | APPL | START |
|---|---|---|---|---|---|
| 57 | 06/20/2008 | ADJUSTMENT OF PTA CALCULATION BY PTO | | 6 | |
| 49 | 11/05/2007 | MAIL NOTICE OF ALLOWANCE | | | |
| 48 | 11/05/2007 | MAIL EXAMINER'S AMENDMENT | | | |
| 47 | 11/02/2007 | ISSUE REVISION COMPLETED | | | |
| 46 | 11/03/2007 | NOTICE OF ALLOWANCE DATA VERIFICATION COMPLETED | | | |
| 45 | 11/03/2007 | CASE DOCKETED TO EXAMINER IN GAU | | | |
| 44 | 11/02/2007 | DOCUMENT VERIFICATION | | | |
| 43 | 11/03/2007 | EXAMINER'S AMENDMENT COMMUNICATION | | | |
| 42 | 11/03/2007 | NOTICE OF ALLOWABILITY | | | |
| 41 | 08/21/2007 | INFORMATION DISCLOSURE STATEMENT CONSIDERED | | | |
| 40 | 10/17/2007 | CASE DOCKETED TO EXAMINER IN GAU | | | |
| 39 | 08/21/2007 | ELECTRONIC INFORMATION DISCLOSURE STATEMENT | | | |
| 38 | 08/21/2007 | INFORMATION DISCLOSURE STATEMENT (IDS) FILED | | | |
| 37 | 08/15/2007 | AFFIDAVIT(S) (RULE 131 OR 132) OR EXHIBIT(S) RECEIVED | | | |
| 36 | 08/15/2007 | NEW OR ADDITIONAL DRAWING FILED | | | |
| 35 | 08/20/2007 | DATE FORWARDED TO EXAMINER | | | |
| 34 | 08/15/2007 | RESPONSE AFTER NON-FINAL ACTION | | 92 | 31 |
| 33 | 08/15/2007 | REQUEST FOR EXTENSION OF TIME - GRANTED | | | |
| 32 | 03/07/2007 | CASE DOCKETED TO EXAMINER IN GAU | | | |
| 31 | 02/15/2007 | MAIL NON-FINAL REJECTION | 438 | | -1 |
| 30 | 02/08/2007 | NON-FINAL REJECTION | | | |
| 28 | 01/25/2007 | CASE DOCKETED TO EXAMINER IN GAU | | | |

| | | | | | |
|---|---|---|---|---|---|
| 27 | 05/24/2005 | INFORMATION DISCLOSURE STATEMENT CONSIDERED | | | |
| 26 | 05/18/2005 | INFORMATION DISCLOSURE STATEMENT CONSIDERED | | | |
| 25 | 09/19/2006 | CASE DOCKETED TO EXAMINER IN GAU | | | |
| 24 | 09/19/2006 | CASE DOCKETED TO EXAMINER IN GAU | | | |
| 23 | 03/28/2006 | CASE DOCKETED TO EXAMINER IN GAU | | | |
| 22 | 03/22/2006 | CASE DOCKETED TO EXAMINER IN GAU | | | |
| 21 | 07/29/2005 | IFW TSS PROCESSING BY TECH CENTER COMPLETE | | | |
| 20 | 07/29/2005 | CASE DOCKETED TO EXAMINER IN GAU | | | |
| 19 | 01/27/2005 | CORRECTED FILING RECEIPT | | | |
| 18.7 | 05/24/2005 | INFORMATION DISCLOSURE STATEMENT (IDS) FILED | | | |
| 18 | 05/24/2005 | INFORMATION DISCLOSURE STATEMENT (IDS) FILED | | | |
| 17.7 | 05/18/2005 | ELECTRONIC INFORMATION DISCLOSURE STATEMENT | | | |
| 17 | 05/18/2005 | INFORMATION DISCLOSURE STATEMENT (IDS) FILED | | | |
| 16 | 02/25/2005 | TRANSFER INQUIRY TO GAU | | | |
| 15 | 02/15/2005 | APPLICATION RETURN FROM OIPE | | | |
| 14 | 02/15/2005 | APPLICATION RETURN TO OIPE | | | |
| 13 | 02/14/2005 | APPLICATION RETURN FROM OIPE | | | |
| 12 | 02/15/2005 | APPLICATION IS NOW COMPLETE | | | |
| 11 | 02/14/2005 | APPLICATION RETURN TO OIPE | | | |
| 10 | 02/14/2005 | APPLICATION DISPATCHED FROM OIPE | | | |
| 9 | 02/14/2005 | APPLICATION IS NOW COMPLETE | | | |
| 8 | 01/27/2005 | ADDITIONAL APPLICATION FILING FEES | | | |
| 7 | 01/27/2005 | A STATEMENT BY ONE OR MORE INVENTORS SATISFYING THE REQUIREMENT UNDER 35 USC 115, OATH OF THE APPLIC | | | |
| 5 | 12/16/2004 | CLEARED BY L&R (LARS) | | | |
| 4 | 11/10/2004 | REFERRED TO LEVEL 2 (LARS) BY OIPE CSR | | | |
| 3 | 11/10/2004 | CASE CLASSIFIED BY OIPE | | | |
| 2 | 10/20/2004 | IFW SCAN & PACR AUTO SECURITY REVIEW | | | |
| 1 | 10/04/2004 | INITIAL EXAM TEAM NN | | | |

**Search Another: Application#** [ ] Search

## EXPLANATION OF PTA CALCULATION

## EXPLANATION OF PTE CALCULATION

To go back, right click here and select Back. To go forward, right click here and select Forward. To refresh, right click here and select Refresh.

Back to OASIS | Home page

UNITED STATES PATENT AND TRADEMARK OFFICE

Commissioner for Patents
United States Patent and Trademark Office
P.O. Box 1450
Alexandria, VA 22313-1450
www.uspto.gov

MEDLEN & CARROLL, LLP
SUITE 350
101 HOWARD STREET
SAN FRANCISCO CA 94105

COPY MAILED
JUN 30 2006
OFFICE OF PETITIONS

In re Application of :
Robert C. Macdonald et al. :
Application No. 10/957,977 : ON PETITION
Filed: October 4, 2005 :
Attorney Docket No. NWESTERN-09620 :

This is a decision on the petition under 37 CFR 1.10 filed April 7, 2006 to correct the filing date to October 4, 2005, rather than the presently accorded filing date of October 1, 2005.

Petitioner alleges that the application was deposited in Express Mail service on October 4, 2005. In support, petitioner supplies a copy of Express Mail Label No. EV472999154US (the same Express Mail number found on the transmittal sheet accompanying the original application papers located in the official file). The "date-in" on the Express Mail Label is not clear however, petitioners have provided a copy of a the tracking report printed from the USPS Internet Track & Confirm and database which shows that a mailing bearing Express Mail Label No. EV472999154US was accepted and "Enroute" on October 4, 2005.

In view of the above, the petition is **GRANTED** and since no fee is due, none will be charged to petitioner's deposit account.

The application is being forwarded to the Office of Initial Patent Examination for correction of the **filing date to October 4, 2005** and for issuance of a corrected filing receipt.

Telephone inquiries related to this matter should be directed to the undersigned Petitions Attorney at (571) 272-3212.

Patricia Faison-Ball

Patricia Faison-Ball
Senior Petitions Attorney
Office of Petitions

UNITED STATES PATENT AND TRADEMARK OFFICE

Commissioner for Patents
United States Patent and Trademark Office
P.O. Box 1450
Alexandria, VA 22313-1450
www.uspto.gov

MEDLEN & CARROLL, LLP
SUITE 350
101 HOWARD STREET
SAN FRANCISCO CA 94105

COPY MAILED

OCT 25 2006

OFFICE OF PETITIONS

In re Application of :
Robert C. Macdonald et al. :
Application No. 10/957,977 :
Filed: October 4, 2004 :
Attorney Docket No. NWESTERN-09620 :

ON PETITION

**CORRECTED DECISION**[1]

This is a decision on the petition under 37 CFR 1.10 filed April 7, 2006 to correct the filing date to October 4, 2004, rather than the presently accorded filing date of October 1, 2004.

Petitioner alleges that the application was deposited in Express Mail service on October 4, 2005. In support, petitioner supplies a copy of Express Mail Label No. EV472999154US (the same Express Mail number found on the transmittal sheet accompanying the original application papers located in the official file). The "date-in" on the Express Mail Label is not clear however, petitioners have provided a copy of a the tracking report printed from the USPS Internet Track & Confirm and database which shows that a mailing bearing Express Mail Label No. EV472999154US was accepted and "Enroute" on October 4, 2005.

In view of the above, the petition is **GRANTED** and since no fee is due, none will be charged to petitioner's deposit account.

The application is being forwarded to the Office of Initial Patent Examination for correction of the **filing date to October 4, 2004** and for issuance of a corrected filing receipt.

Telephone inquiries related to this matter should be directed to the undersigned Petitions Attorney at (571) 272-3212.

Patricia Faison-Ball

Patricia Faison-Ball
Senior Petitions Attorney
Office of Petitions

[1]This decision corrects the decision mailed June 29, 2006 and the filing date to October 4, 2004.

## SPE RESPONSE FOR CERTIFICATE OF CORRECTION

Paper No.: _____

**DATE** : 07-02-08

**TO SPE OF** : ART UNIT 1624

**SUBJECT** : Request for Certificate of Correction for Appl. No.: **10/957980** Patent No.: **7351703**

Please respond to this request for a certificate of correction within 7 days.

Please review the requested changes/corrections as shown in the **COCIN** document(s) in the IFW application image. No new matter should be introduced, nor should the scope or meaning of the claims be changed.

Please complete the response (see below) and forward the completed response to scanning using document code **COCX**.


**Angela Green**
**Certificates of Correction Branch**
**703.308.9380 ext.** 123


**Thank You For Your Assistance**

**The request for issuing the above-identified correction(s) is hereby:**

Note your decision on the appropriate box.

- ☒ **Approved** — **All** changes apply.
- ☐ **Approved in Part** — Specify below which changes **do not** apply.
- ☐ **Denied** — State the reasons for denial below.

**Comments:** _____

SPE

1624
Art Unit

# UNITED STATES PATENT AND TRADEMARK OFFICE

# CERTIFICATE OF CORRECTION

PATENT NO. 7,351,703

DATED: April 1, 2008

INVENTORS: URSULA SCHINDLER, et al.

It is hereby certified that errors appear in the above-identified patent and that said Letters Patent is hereby corrected as shown below:

* In claim 1, column 29, line 6, "$S(O)^n$-$NR^5R^6$" should read --$S(O)_n$-$NR^5R^6$--.

* In claim 1, column 29, line 18, "$S_2$-aryl or $S_2$-heterocyclyl;" should read --$SO_2$-aryl or $SO_2$-heterocyclyl;--.

* In claim 1, column 29, lines 30-31, "-O-($C_2$-$C_4$)-alkyl-O-($C_1$-$C_4$ )-alkyl," should read -- -O-($C_2$-$C_4$)-alkyl-O-($C_1$-$C_7$)-alkyl,--.

In claim 1, column 29, line 52, "atom a sulfur" should read --atom, a sulfur--.

In claim 1, column 29, line 64, "independently or" should read --independently of--.

* In claim 3, column 30, line 54, "$A_2$," should read --$A^2$,--.

* In claim 3, column 31, line 6, "$S(O)^n$-$NR^5R^6$" should read --$S(O)_n$-$NR^5R^6$--.

* In claim 3, column 31, lines 9-10, "-S-($C_1$-$C_7$)-alkyl-$R_7$," should read -- -S-($C_1$-$C_7$)-alkyl-$R^7$,--.

* In claim 3, column 31, line 11, "$NR_8R_9$," should read --$NR^8R^9$,--.

* In claim 3, column 31, lines 36-37, "$(CH_2)_m$-NH-($C_1$-$C_4$)-alkyl" should read -- -$(CH_2)_m$-NH-($C_1$-$C_4$)-alkyl--.

* In claim 3, column 31, line 45, "-O-($C_1$-$C_4$)-alkyl," should read -- -O-($C_1$-$C_7$)-alkyl,--.

In claim 3, column 32, line 3, "atom a sulfur" should read --atom, a sulfur--.

In claim 3, column 32, line 15, "independently or" should read --independently of--.

* In claim 3, column 32, lines 42-43, "-NH-($C_1$-$C_3$)" should read -- -NH-($C_1$-$C_3$)-alkyl,--.

MAILING ADDRESS OF SENDER

Finnegan, Henderson, Farabow,
Garrett & Dunner, L.L.P.
901 New York Avenue, NW
Washington, D.C. 20001-4413

Patent No. 7,351,703

No. of additional copies
@ 50¢ per page

UNITED STATES PATENT AND TRADEMARK OFFICE

Commissioner for Patents
United States Patent and Trademark Office
P.O. Box 1450
Alexandria, VA 22313-1450
www.uspto.gov

JJGJR.: 02-06

Paper No: __

HOGAN & HARTSON LLP
IP GROUP, COLUMBIA SQUARE
555 THIRTEENTH STREET, N.W.
WASHINGTON DC 20004

**COPY MAILED**

FEB 2 2 2006

**OFFICE OF PETITIONS**

In re Application of :
Beretta :
Application No. 10/958,006 :
Filing Date: 4 October, 2004 :
Attorney Docket No. 71555//82062-0144 CON :

This is a decision on the petition filed on 1 February, 2006, to revive the instant application 37 C.F.R. §1.137(b) as having been abandoned due to unintentional delay.

For the reasons set forth below, the petition under 37 C.F.R. §1.137(b) **GRANTED**.

## BACKGROUND

The record reflects that:

- Petitioner failed to reply timely and properly to the non-final Office action mailed on 5 May, 2005, with reply due absent extension of time on or 5 August, 2005;
- the Application went abandoned after midnight 5 August, 2005;
- the Office mailed a Notice of Abandonment on 9 December, 2005;
- with the instant petition and fee, Petition files a reply in the form of an amendment and makes the statement of unintentional delay.
-

Thus, Petitioner is considered to have satisfied the requirements of the regulation.

## STATUTES, REGULATIONS AND ANALYSIS

Congress has authorized the Commissioner to "revive an application if the delay is shown to the satisfaction of the Commissioner to have been "unavoidable." 35 U.S.C. §133 (1994).[1]

The regulations at 37 C.F.R. §1.137(a) and (b) set forth the requirements for a petitioner to revive a previously unavoidably or unintentionally, respectively, abandoned application under this congressional grant of authority. The language of 35 U.S.C. §133 and 37 C.F.R. §1.137(a) is clear, unambiguous, and without qualification: the delay in tendering the reply to the outstanding Office action, as well as filing the first petition seeking revival, must have been unavoidable for the reply now to be accepted on petition.[2]

Delays in responding properly raise the question whether delays are unavoidable.[3] Where there is a question whether the delay was unavoidable, Petitioners must meet the burden of establishing that the delay was unavoidable within the meaning of 35 U.S.C. §133 and 37 C.F.R. §1.137(a).[4] And the Petitioner must be diligent in attending to the matter.[5] Failure to do so does not constitute the care required under Pratt, and so cannot satisfy the test for diligence and due care.

(By contrast, unintentional delays are those that do not satisfy the very strict statutory and regulatory requirements of unavoidable delay, and also, by definition, are not intentional.[6]))

---

[1] 35 U.S.C. §133 provides:
**35 U.S.C. §133 Time for prosecuting application.**
Upon failure of the applicant to prosecute the application within six months after any action therein, of which notice has been given or mailed to the applicant, or within such shorter time, not less than thirty days, as fixed by the Commissioner in such action, the application shall be regarded as abandoned by the parties thereto, unless it be shown to the satisfaction of the Commissioner that such delay was unavoidable.

[2] Therefore, by example, an unavoidable delay in the payment of the Filing Fee might occur if a reply is shipped by the US Postal Service, but due to catastrophic accident, the delivery is not made.

[3] See: *Changes to Patent Practice and Procedure; Final Rule Notice*, 62 *Fed. Reg.* at 53158-59 (October 10, 1997), 1203 *Off. Gaz. Pat. Office* at 86-87 (October 21, 1997).

[4] See: In re Application of G, 11 USPQ2d 1378, 1380 (Comm'r Pats. 1989).

[5] See: Diligence in Filing Petitions to Revive and Petitions to Withdraw the Holding of Abandonment, 1124 Off. Gaz. Pat. Office 33 (March 19, 1991). It was and is Petitioner's burden to exercise diligence in seeking either to have the holding of abandonment withdrawn or the application revived. See 1124 Off. Gaz. Pat. Office supra.

[6] Therefore, by example, an unintentional delay in the reply might occur if the reply and transmittal form are to be prepared for shipment by the US Postal Service, but other pressing matters distract one's attention and the mail is not timely deposited for shipment.

Allegations as to Unintentional Delay

A grantable petition under 37 C.F.R. §1.137(b) requires a petition, fee, statement of unintentional delay, reply, and a terminal disclaimer and fee if appropriate.

As indicated above, Petitioner has satisfied the requirements of the regulation.

## CONCLUSION

The petition under 37 C.F.R. §1.137(b) is **granted**.

The application is released to Technology Center 3600 for further processing in due course.

Telephone inquiries concerning this decision may be directed to the undersigned at (571) 272-3214.

John J. Gillon, Jr.
Senior Attorney
Office of Petitions

## SPE RESPONSE FOR CERTIFICATE OF CORRECTION

**DATE** : 10/13/09 **Paper No.:** —

**TO SPE OF** : ART UNIT 1795

**SUBJECT** : Request for Certificate of Correction for Appl. No.: 10/858007 Patent No.: 7560215 B2

Please respond to this request for a certificate of correction within 7 days.

**FOR IFW FILES:**

Please review the requested changes/corrections as shown in the **COCIN** document(s) in the IFW application image. No new matter should be introduced, nor should the scope or meaning of the claims be changed.

Please complete the response (see below) and forward the completed response to scanning using document code **COCX**.

**FOR PAPER FILES:**

Please review the requested changes/corrections as shown in the attached certificate of correction. Please complete this form (see below) and forward it with the file to:

**Certificates of Correction Branch (CofC)**
**Randolph Square – 9D10-A**
**Palm Location 7580**

Virginia Tolbert
**Certificates of Correction Branch**
571-272-0460

**Thank You For Your Assistance**

**The request for issuing the above-identified correction(s) is hereby:**
Note your decision on the appropriate box.

- XXXXX ☐ **Approved** — **All** changes apply.
- ☐ **Approved in Part** — Specify below which changes **do not** apply.
- ☐ **Denied** — State the reasons for denial below.

**Comments:** _____

/Mark F. Huff/
SPE 1795

11/18/2009

## SPE RESPONSE FOR CERTIFICATE OF CORRECTION

Paper No.: ____

DATE : 11/2/06

TO SPE OF : ART UNIT 2612

SUBJECT : Request for Certificate of Correction for Appl. No.: 10/958028 Patent No.: 7113079 B2

Please respond to this request for a certificate of correction within 7 days.

Please review the requested changes/corrections as shown in the **COCIN** document(s) in the IFW application image. No new matter should be introduced, nor should the scope or meaning of the claims be changed.

Please complete the response (see below) and forward the completed response to scanning using document code **COCX**.

*Virginia Tolbert*
**Certificates of Correction Branch**

**703-308-9390 ext. 113**

**Thank You For Your Assistance**

**The request for issuing the above-identified correction(s) is hereby:**
Note your decision on the appropriate box.

- [X] **Approved** — **All** changes apply.
- [ ] **Approved in Part** — Specify below which changes **do not** apply.
- [ ] **Denied** — State the reasons for denial below.

**Comments:** OK to enter

DANIEL WU
SUPERVISORY PATENT EXAMINER

SPE

2612
Art Unit

UNITED STATES PATENT AND TRADEMARK OFFICE

COMMISSIONER FOR PATENTS
UNITED STATES PATENT AND TRADEMARK OFFICE
P.O. BOX 1450
ALEXANDRIA, VA 22313-1450
WWW.USPTO.GOV

Paper No. None

FOLEY & LARDNER
P.O. BOX 80278
SAN DIEGO CA 92138-0278

**COPY MAILED**

JUL 12 2005

**OFFICE OF PETITIONS**

In re Application of
Mich B. Hein et al.
Application No. 10/958,062
Filed: October 4, 2004
Attorney Docket No. EPI3007I (071344-0314)
Title: TRANSGENIC PLANTS EXPRESSING ASSEMBLED SECRETORY ANTIBODIES

DECISION ON PETITION

This is a decision on the petition under 37 C.F.R. §1.182, filed May 31, 2005, requesting that the above-identified application be accorded a filing date of October 4, 2004, with Figure 3B of the specification as part of the original disclosure of the application.

The application was deposited on October 4, 2004. However, on April 4, 2005, the Office of Initial Patent Examination (OIPE) mailed a "Notice of Omitted Item(s) in a Nonprovisional Application – Filing Date Granted" (notice) stating that the application had been accorded a filing date, and advising applicants that it appeared as though the application was deposited without Figure 3B of the specification. The notice set a two-month period for response.

On May 31, 2005, the instant petition was filed, along with a copy of Figure 3B. The petition fee of $400 has been charged to Petitioner's Deposit Account, as authorized in the petition.

Petitioner has not contended that this page was present on filing. While it appears that this page was omitted on filing, Petitioner contends that it was constructively included, through incorporation by reference.

The Office allows an applicant to rely upon an incorporation by reference of a parent application when a portion of the child application has been inadvertently omitted. The specification indicates that the instant application is a continuation of application 09/512,568, and the Utility Patent Application Transmittal letter indicates that the entire disclosure of the parent application is incorporated by reference.

Section 201.06(c) of the MPEP sets forth, in part:

an applicant may incorporate by reference the prior application by including, in the continuation or divisional application-as-filed, a statement that such specifically enumerated prior application or applications are "hereby incorporated herein by reference." The statement may appear in the specification or in the application transmittal

letter. The incorporation by reference statement can only be relied upon to permit the entering of a portion of the prior application into the continuation or divisional application when the portion of the prior application has been inadvertently omitted from the submitted application papers in the continuation or divisional application. The inclusion of this incorporation by reference of the prior application(s) will permit an applicant to amend the continuation or divisional application to include any subject matter in such prior application(s), without the need for a petition (emphasis added) provided the continuation or divisional application is entitled to a filing date notwithstanding the incorporation by reference.

For this reason, the petition under 37 CFR §182 is **DISMISSED**.

The application will receive a filing date of October 4, 2004, however, Figure 3B submitted with the instant petition will not be entered. If Petitioner desires for the missing page to be included, he should submit this page via an amendment. This amendment, of course, will not be entered until it has been reviewed by the examiner for new matter[1]. The amendment is not new matter if the substance was a part of the disclosure of the prior application.

The original application papers will include only those application papers present on the date of deposit.

The petition fee of $400.00 will not be refunded, as this petition was not necessitated by any error on the part of the Office.

Telephone inquiries regarding this decision should be directed to the undersigned at (571) 272-3225. All other inquiries concerning examination procedures or status of the application should be directed to the Technology Center.

**Paul Shanoski**
**Senior Attorney**
**Office of Petitions**
**United States Patent and Trademark Office**

1 See MPEP 608.02(a).