UNITED STATES PATENT AND TRADEMARK OFFICE

Commissioner for Patents
United States Patent and Trademark Office
P.O. Box 1450
Alexandria, VA 22313-1450
www.uspto.gov

Merchant & Gould PC
P.O. Box 2903
Minneapolis, MN 55402-0903

COPY MAILED

JUN 1 8 2007

OFFICE OF PETITIONS

In re Application of	:	
Benton S. Coons et al.	:	
Application No. 10/973,809	:	DECISION ON PETITION
Filed: October 25, 2004	:	TO WITHDRAW
Attorney Docket No. 12105.2USI1	:	FROM RECORD
	:	

This is a decision on the Request to Withdraw as attorney or agent of record under 37 C.F.R. § 1.36(b), filed November 28, 2006.

The request is **APPROVED**.

A grantable request to withdraw as attorney/agent of record must be signed by every attorney/agent seeking to withdraw or contain a clear indication that one attorney is signing on behalf of another/others. A request to withdraw will not be approved unless at least 30 (thirty) days would remain between the date of approval and the later of the expiration date of a time to file a response or the expiration date of the maximum time period which can be extended under 37 C.F.R. § 1.136(a).

The request was signed by David G. Schmaltz on behalf of all attorneys of record.

All attorneys/agents have been withdrawn.

Applicant is reminded that there is no attorney of record at this time.

The request to change the correspondence of record is not acceptable as the requested correspondence address is not that of: (1) the first named signing inventor; or (2) an intervening assignee of the entire interest under 37 C.F.R 3.71. All future communications from the Office will be directed to the first named signing inventor at the first copied address below until otherwise properly notified by the applicant.

There is no outstanding Office action at this time.

Telephone inquiries concerning this decision should be directed to Terri Williams at 571-272-2991.

Terri Williams

Terri Williams
Petitions Examiner
Office of Petitions

cc: **Benton S. Coons**
19185 Edgewood Lane
Prior Lake, MN 55372

cc: **Advanced Wireless Communications**
20809 Kensington Blvd.
Lakeville, MN 55044-7486

UNITED STATES PATENT AND TRADEMARK OFFICE

UNITED STATES DEPARTMENT OF COMMERCE
United States Patent and Trademark Office
Address: COMMISSIONER FOR PATENTS
P.O. Box 1450
Alexandria, Virginia 22313-1450
www.uspto.gov

GRAYBEAL JACKSON LLP
400 - 108TH AVENUE NE
SUITE 700
BELLEVUE, WA 98004

Mail Date: 04/21/2010

Applicant	: Rajat Chauhan	: DECISION ON REQUEST FOR
Patent Number	: 7613853	: RECALCULATION of PATENT
Issue Date	: 11/03/2009	: TERM ADJUSTMENT IN VIEW
Appliction No	: 10/973,812	: OF WYETH AND NOTICE OF INTENT TO
Filed	: 10/25/2004	: ISSUE CERTIFICATE OF CORRECTION
		:

The Request for Recalculation is **GRANTED** to the extent indicated.

The patent term adjustment has been determined to be **754** days. The USPTO will *sua sponte* issue a certificate of correction reflecting the amount of PTA days determined by the recalculation.

Prior to the issuance of the certificate of correction, the USPTO will afford patentee an opportunity to be heard and request reconsideration. Accordingly, patentee has **one month or thirty (30) days**, whichever is longer, to file a request for reconsideration of this patent term adjustment calculation. See 35 U.S.C. 154(b)(3)(B)(ii) and 37 CFR 1.322(a)(4). No extensions of time will be granted under 37 CFR 1.136.

Patentee should use document code PET.OP if electronically filing a request for reconsideration of this patent term adjustment calculation. The patentee must also include the information required by 37 CFR 1.705(b)(2) and the fee required by 37 CFR 1.18(e). If patentee does not file a timely request for reconsideration of this patent term adjustment calculation including the information required by 37 CFR 1.705(b)(2) and the fee required by 37 CFR 1.18(e), the USPTO will issue a certificate of correction reflecting the PTA determination noted above.

Patentee should be aware that in order to preserve the right to review in the United States District Court for the District of Columbia of the USPTO patent term adjustment determination, patentee must ensure that he or she also take the steps required under 35 U.S.C. 154(b)(4)(A) in a timely manner. Nothing in the request for recalculation should be construed as providing an alternative time frame for commencing a civil action under 35 U.S.C. 154(b)(4)(A).

Any questions concerning this decision should be directed to the Office of Patent Legal Administration at 571-272-7702.

UNITED STATES PATENT AND TRADEMARK OFFICE

UNITED STATES DEPARTMENT OF COMMERCE
United States Patent and Trademark Office
Address: COMMISSIONER FOR PATENTS
P.O. Box 1450
Alexandria, Virginia 22313-1450
www.uspto.gov

GRAYBEAL JACKSON LLP
400 - 108TH AVENUE NE
SUITE 700
BELLEVUE, WA 98004

Mail Date: 05/18/2010

Applicant : Rajat Chauhan
Patent Number : 7613853
Issue Date : 11/03/2009
Application No : 10/973,812
Filed : 10/25/2004

: NOTICE CONCERNING IMPROPER
: CALCULATION OF PATENT TERM
: ADJUSTMENT BASED UPON USPTO
: IMPROPERLY MEASURING REDUCTION
: PERIOD UNDER 37 CFR 1.704(c)(10).

The United States Patent and Trademark Office (USPTO) discovered that in processing the recent recalculation decisions mailed in response to patentee's filed Request for Recalculation of Patent Term Adjustment in view of Wyeth, the USPTO improperly measured the reduction period for reductions under 37 CFR 1.704(c)(10). Pursuant to 37 CFR 1.704(c)(10), patentee's reduction begins on the date of filing the amendment under 37 CFR 1.312 ("1.312 amendment") or other related paper and ends on the date that the Office mails a response to the filing of the 1.312 amendment or other paper. It has been discovered that during the recalculation, the calculation failed to the limit the reduction to the mail date of the response to the 1.312 amendment or other paper. Accordingly, patentee's reductions were greater than warranted.

This notice **VACATES** the previous GRANTED request for recalculation and provides patentee with a revised GRANTED recalculation.

The patent term adjustment has been determined to be **788** days. The USPTO will *sua sponte* issue a certificate of correction reflecting the amount of patent term adjustment (PTA) days determined by the recalculation.

Prior to the issuance of the certificate of correction, the USPTO will afford patentee an opportunity to be heard and request reconsideration. Accordingly, patentee has **one month or thirty (30) days** from the mail date of this notice, whichever is longer, to file a request for reconsideration of this PTA calculation. See 35 U.S.C. § 154(b)(3)(B)(ii) and 37 CFR 1.322(a)(4).

Patentee should use document code PET.OP if electronically filing a request for reconsideration of this PTA calculation. The patentee must also include the information required by 37 CFR 1.705(b)(2), and the fee required by 37 CFR 1.18(e). If patentee does not file a timely request for reconsideration of this PTA calculation, including the information required by 37 CFR 1.705(b)(2) and the fee required by 37 CFR 1.18(e), the USPTO will issue a certificate of correction reflecting the PTA determination noted above.

Patentee should be aware that in order to preserve the right of review of the USPTO's PTA determination in the United States District Court for the District of Columbia, patentee must ensure that the steps required under 35 U.S.C. § 154 (b)(4) are taken in a timely manner. Nothing in the request for recalculation should be construed as providing an alternative time frame for commencing a civil action under 35 U.S.C. § 154(b)(4).

UNITED STATES PATENT AND TRADEMARK OFFICE

Commissioner for Patents
United States Patent and Trademark Office
P.O. Box 1450
Alexandria, VA 22313-1450
www.uspto.gov

Robert B. O'Dell
602 Calmar Avenue
Oakland CA 94610

COPY MAILED

MAR 0 3 2008

OFFICE OF PETITIONS

In re Application of	:	
Robert B. O'Dell	:	
Application No. 10/973,813	:	DECISION ON PETITION
Filed: October 25, 2004	:	TO MAKE SPECIAL UNDER
Attorney Docket No. RO 0010	:	37 CFR 1.102(c)(1)
	:	

This is a decision on the petition under 37 CFR 1.102(c)(1), filed January 9 2008, to make the above-identified application special based on applicant's age as set forth in M.P.E.P. § 708.02, Section IV.

The petition is **GRANTED**.

A grantable petition to make an application special under 37 CFR 1.102(c)(1) and MPEP § 708.02, Section IV: Applicant's Age must be accompanied by evidence showing that at least one of the applicants is 65 years of age, or more, such as a birth certificate or a statement by applicant. No fee is required

The instant petition includes a statement from the applicant declaring that he is 65 years of age or older. Accordingly, the above-identified application has been accorded "special" status.

Telephone inquiries concerning this decision should be directed to Terri Williams at 571-272-2991.

All other inquiries concerning either the examination or status of the application should be directed to the Technology Center.

The application is being forwarded to the Technology Center Art Unit 2629 for action on the merits commensurate with this decision.

T. Williams

Terri Williams
Petitions Examiner
Office of Petitions

UNITED STATES PATENT AND TRADEMARK OFFICE

COMMISSIONER FOR PATENTS
UNITED STATES PATENT AND TRADEMARK OFFICE
P.O. BOX 1450
ALEXANDRIA, VA 22313-1450
www.uspto.gov

BORGWARNER INC.
PATENT ADMINISTRATOR
3850 HAMLIN ROAD
AUBURN HILLS, MI 48326-2872

COPY MAILED

JUN 06 2007

OFFICE OF PETITIONS

In re Application of
Thomas E. Braford
Application No. 10/973,823
Filed: October 26, 2004
Attorney Docket No. DKT04041

ON PETITION

This is a decision on the petition under 37 CFR 1.137(b) to revive the above-identified application, filed January 17, 2007.

The petition is **GRANTED**.

The application became abandoned for failure to pay the issue fee on or before December 8, 2006. A Notice of Abandonment was mailed on January 5, 2007. On January 17, 2007, the present petition was filed.

The petition satisfies the requirements of 37 CFR 1.137(b) in that petitioner has supplied (1) the reply in the form of the $1,400 issue fee and the $300 publication fee; (2) the petition fee of $1,500; and (3) an adequate statement of unintentional delay.

The file does not indicate a change of address has been submitted, although the address given on the petition differs from the address of record. If appropriate, a change of address should be filed in accordance with MPEP 601.03. A courtesy copy of this decision is being mailed to the address given on the petition; however, the Office will mail all future correspondence solely to the address of record.

The application is being referred to the Office of Publications to be processed into a patent.

Telephone inquires related to this decision should be directed to the undersigned at (571) 272-3204. Telephone inquiries related to processing at Publishing Division should be directed to (571) 272-4200.

Sherry D. Brinkley
Petitions Examiner
Office of Petitions

cc: PHILIP PETTI
FITCH EVEN TABIN AND FLANNERY
102 S LASALLE ST STE 1600
CHICAGO, IL 60603

UNITED STATES PATENT AND TRADEMARK OFFICE

Commissioner for Patents
United States Patent and Trademark Office
P.O. Box 1450
Alexandria, VA 22313-1450
www.uspto.gov

COPY MAILED

JUL 13 2007

OFFICE OF PETITIONS

WILSON SONSINI GOODRICH & ROSATI
650 PAGE MILL ROAD
PALO ALTO CA 94304-1050

In re Application of	:	
YUAN, et al.	:	
Application No. 10/973,834	:	DECISION ON PETITION
Filed: October 25, 2004	:	TO WITHDRAW
Attorney Docket No. **29914-702.501**	:	FROM RECORD

This is a decision on the Request to Withdraw as attorney or agent of record under 37 C.F.R. § 1.36(b), filed December 8, 2006.

The request is **NOT APPROVED** as moot.

A review of the file record indicates that the power of attorney to WILSON SONSINI GOODRICH & ROSATI has been revoked by the assignee of the patent application on January 5, 2007. Accordingly, the request to withdraw under 37 C.F.R. § 1.36(b) is moot.

All future communications from the Office will continue to be directed to the below-listed address until otherwise notified by applicant.

Telephone inquires concerning this decision should be directed to the undersigned at 571-272-7253.

Monica A. Graves
Petitions Examiner
Office of Petitions

cc: **SHAY LAW GROUP LLP**
2755 CAMPUS DRIVE, SUITE 210
SAN MATEO, CA 94403

UNITED STATES PATENT AND TRADEMARK OFFICE

UNITED STATES DEPARTMENT OF COMMERCE
United States Patent and Trademark Office
Address: COMMISSIONER FOR PATENTS
P.O. Box 1450
Alexandria, Virginia 22313-1450
www.uspto.gov

SHAY GLENN LLP
2755 CAMPUS DRIVE
SUITE 210
SAN MATEO, CA 94403

Mail Date: 04/30/2010

Applicant	: Hansen Yuan	: DECISION ON REQUEST FOR
Patent Number	: 7608104	: RECALCULATION of PATENT
Issue Date	: 10/27/2009	: TERM ADJUSTMENT IN VIEW
Application No	: 10/973,834	: OF WYETH AND NOTICE OF INTENT TO
Filed	: 10/25/2004	: ISSUE CERTIFICATE OF CORRECTION
		:

The Request for Recalculation is **GRANTED** to the extent indicated.

The patent term adjustment has been determined to be **1219** days. The USPTO will *sua sponte* issue a certificate of correction reflecting the amount of PTA days determined by the recalculation.

Prior to the issuance of the certificate of correction, the USPTO will afford patentee an opportunity to be heard and request reconsideration. Accordingly, patentee has **one month or thirty (30) days**, whichever is longer, to file a request for reconsideration of this patent term adjustment calculation. See 35 U.S.C. 154(b)(3)(B)(ii) and 37 CFR 1.322(a)(4). No extensions of time will be granted under 37 CFR 1.136.

Patentee should use document code PET.OP if electronically filing a request for reconsideration of this patent term adjustment calculation. The patentee must also include the information required by 37 CFR 1.705(b)(2) and the fee required by 37 CFR 1.18(e). If patentee does not file a timely request for reconsideration of this patent term adjustment calculation including the information required by 37 CFR 1.705(b)(2) and the fee required by 37 CFR 1.18(e), the USPTO will issue a certificate of correction reflecting the PTA determination noted above.

Patentee should be aware that in order to preserve the right to review in the United States District Court for the District of Columbia of the USPTO patent term adjustment determination, patentee must ensure that he or she also take the steps required under 35 U.S.C. 154(b)(4)(A) in a timely manner. Nothing in the request for recalculation should be construed as providing an alternative time frame for commencing a civil action under 35 U.S.C. 154(b)(4)(A).

Any questions concerning this decision should be directed to the Office of Patent Legal Administration at 571-272-7702.

UNITED STATES PATENT AND TRADEMARK OFFICE

Commissioner for Patents
United States Patent and Trademark Office
P.O. Box 1450
Alexandria, VA 22313-1450
www.uspto.gov

DONALD T. SHOEBRIDGE
4402 N. 750 WEST
HUNTINGTON IN 46750

COPY MAILED

JAN 2 5 2007

OFFICE OF PETITIONS

ON PETITION

In re Application of :
Shoebridge et al. :
Application No. 10/973,839 :
Filed: October 26, 2004 :
Attorney Docket No. AUTOMATICFOLDER :

This is a decision on the petition under 37 C.F.R. § 1.137(b), filed December 26, 2006, to revive the above-identified application.

The petition is **DISMISSED**.

Any request for reconsideration must be submitted within TWO (2) MONTHS from the mail date of this decision. No further petition fee is required for the request. Extensions of time under 37 CFR 1.136(a) are permitted. The reconsideration request should include a cover letter entitled "Renewed Petition under 37 CFR 1.137(b)." This is **not** a final agency action within the meaning of 5 U.S.C. § 704.

The above-identified application became abandoned for failure to submit formal drawings in a timely manner in reply to the Notice of Allowability mailed June 12, 2006, which set a non-extendable period for reply of three (3) months. Accordingly, the above-identified application became abandoned on September 13, 2006. A Notice of Abandonment was mailed on October 19, 2006.

A grantable petition under 37 CFR 1.137(b) must be accompanied by:
(1) the required reply,[1]
(2) the petition fee,
(3) a statement that the entire delay in filing the required reply from the due date for the reply until the filing of a grantable petition pursuant to 37 CFR 1.137(b) was unintentional, and
(4) a terminal disclaimer and fee if the application was filed on or before June 8, 1995 or if the application is a design application.

Where there is a question as to whether either the abandonment or the delay in filing a petition under 37 CFR 1.137 was unintentional, the Commissioner may require additional information.[2]

---

[1] In a nonprovisional application abandoned for failure to prosecute, the required reply may be met by the filing of a continuing application. In an application or patent, abandoned or lapsed for failure to pay the issue fee or any portion thereof, the required reply must be the payment of the issue fee or any outstanding balance thereof.

[2] See MPEP 711.03(c)(III)(C) and (D).

The instant petition lacks item (1). The instant application cannot be revived until the corrected drawings have been submitted. A copy of the Notice of Allowability and the Office action mailed March 2, 2006 referenced in relation to the Corrected Drawings requirement are both enclosed per petitioner's request. Any questions concerning the drawings should be directed to the Examiner.

Further correspondence with respect to this matter should be addressed as follows:

By mail: Mail Stop PETITIONS
Commissioner for Patents
Post Office Box 1450
Alexandria, VA 22313-1450

By hand: Customer Window located at:

U.S. Patent and Trademark Office
Customer Service Window Randolph Building
401 Dulany Street
Alexandria, VA 22314

By fax: (571) 273-8300
ATTN: Office of Petitions

Any questions concerning this matter may be directed to the undersigned at (571) 272-3206.

Liana Walsh
Petitions Examiner
Office of Petitions

Enclosure: Notice of Allowability previously mailed June 12, 2006
Office Action previously mailed March 2, 2006

Notice of Allowability	Application No.	Applicant(s)	
	10/973,839	SHOEBRIDGE ET AL.	
	Examiner	Art Unit	
	Hemant M. Desai	3721	

-- The MAILING DATE of this communication appears on the cover sheet with the correspondence address--

All claims being allowable, PROSECUTION ON THE MERITS IS (OR REMAINS) CLOSED in this application. If not included herewith (or previously mailed), a Notice of Allowance (PTOL-85) or other appropriate communication will be mailed in due course. **THIS NOTICE OF ALLOWABILITY IS NOT A GRANT OF PATENT RIGHTS.** This application is subject to withdrawal from issue at the initiative of the Office or upon petition by the applicant. See 37 CFR 1.313 and MPEP 1308.

1. ☒ This communication is responsive to 5/10/06.

2. ☒ The allowed claim(s) is/are 9-11.

3. ☐ Acknowledgment is made of a claim for foreign priority under 35 U.S.C. § 119(a)-(d) or (f).
   a) ☐ All b) ☐ Some* c) ☐ None of the:
      1. ☐ Certified copies of the priority documents have been received.
      2. ☐ Certified copies of the priority documents have been received in Application No. _____.
      3. ☐ Copies of the certified copies of the priority documents have been received in this national stage application from the International Bureau (PCT Rule 17.2(a)).

   * Certified copies not received: _____.

Applicant has THREE MONTHS FROM THE "MAILING DATE" of this communication to file a reply complying with the requirements noted below. Failure to timely comply will result in ABANDONMENT of this application.
THIS THREE-MONTH PERIOD IS NOT EXTENDABLE.

4. ☐ A SUBSTITUTE OATH OR DECLARATION must be submitted. Note the attached EXAMINER'S AMENDMENT or NOTICE OF INFORMAL PATENT APPLICATION (PTO-152) which gives reason(s) why the oath or declaration is deficient.

5. ☒ CORRECTED DRAWINGS (as "replacement sheets") must be submitted.
   (a) ☐ including changes required by the Notice of Draftsperson's Patent Drawing Review (PTO-948) attached
      1) ☐ hereto or 2) ☐ to Paper No./Mail Date _____.
   (b) ☒ including changes required by the attached Examiner's Amendment / Comment or in the Office action of Paper No./Mail Date 3/2/2006.

   Identifying indicia such as the application number (see 37 CFR 1.84(c)) should be written on the drawings in the front (not the back) of each sheet. Replacement sheet(s) should be labeled as such in the header according to 37 CFR 1.121(d).

6. ☐ DEPOSIT OF and/or INFORMATION about the deposit of BIOLOGICAL MATERIAL must be submitted. Note the attached Examiner's comment regarding REQUIREMENT FOR THE DEPOSIT OF BIOLOGICAL MATERIAL.

Attachment(s)

1. ☐ Notice of References Cited (PTO-892)
2. ☐ Notice of Draftperson's Patent Drawing Review (PTO-948)
3. ☐ Information Disclosure Statements (PTO-1449 or PTO/SB/08), Paper No./Mail Date _____
4. ☐ Examiner's Comment Regarding Requirement for Deposit of Biological Material
5. ☐ Notice of Informal Patent Application (PTO-152)
6. ☒ Interview Summary (PTO-413), Paper No./Mail Date _____.
7. ☒ Examiner's Amendment/Comment
8. ☒ Examiner's Statement of Reasons for Allowance
9. ☐ Other _____.

UNITED STATES PATENT AND TRADEMARK OFFICE

UNITED STATES DEPARTMENT OF COMMERCE
United States Patent and Trademark Office
Address: COMMISSIONER FOR PATENTS
P.O. Box 1450
Alexandria, Virginia 22313-1450
www.uspto.gov

APPLICATION NO.	FILING DATE	FIRST NAMED INVENTOR	ATTORNEY DOCKET NO.	CONFIRMATION NO.
10/973,839	10/26/2004	Donald Thomas Shoebridge	AUTOMATICFOLDER	8131

7590 03/02/2006

DONALD T. SHOEBRIDGE
4402 N. 750 WEST
HUNTINGTON, IN 46750

EXAMINER
DESAI, HEMANT

ART UNIT	PAPER NUMBER
3721	

DATE MAILED: 03/02/2006

Please find below and/or attached an Office communication concerning this application or proceeding.

Office Action Summary	Application No.	Applicant(s)	
	10/973,839	SHOEBRIDGE ET AL.	
	Examiner	Art Unit	
	Hemant M. Desai	3721	

-- The MAILING DATE of this communication appears on the cover sheet with the correspondence address --

Period for Reply

A SHORTENED STATUTORY PERIOD FOR REPLY IS SET TO EXPIRE 3 MONTH(S) OR THIRTY (30) DAYS, WHICHEVER IS LONGER, FROM THE MAILING DATE OF THIS COMMUNICATION.

- Extensions of time may be available under the provisions of 37 CFR 1.136(a). In no event, however, may a reply be timely filed after SIX (6) MONTHS from the mailing date of this communication.
- If NO period for reply is specified above, the maximum statutory period will apply and will expire SIX (6) MONTHS from the mailing date of this communication.
- Failure to reply within the set or extended period for reply will, by statute, cause the application to become ABANDONED (35 U.S.C. § 133). Any reply received by the Office later than three months after the mailing date of this communication, even if timely filed, may reduce any earned patent term adjustment. See 37 CFR 1.704(b).

Status

1)☒ Responsive to communication(s) filed on 26 October 2004.

2a)☐ This action is FINAL. 2b)☒ This action is non-final.

3)☐ Since this application is in condition for allowance except for formal matters, prosecution as to the merits is closed in accordance with the practice under *Ex parte Quayle*, 1935 C.D. 11, 453 O.G. 213.

Disposition of Claims

4)☒ Claim(s) 1-8 is/are pending in the application.

4a) Of the above claim(s) _____ is/are withdrawn from consideration.

5)☐ Claim(s) _____ is/are allowed.

6)☒ Claim(s) 1-4,7 and 8 is/are rejected.

7)☒ Claim(s) 5 and 6 is/are objected to.

8)☐ Claim(s) _____ are subject to restriction and/or election requirement.

Application Papers

9)☐ The specification is objected to by the Examiner.

10)☒ The drawing(s) filed on 26 October 2004 is/are: a)☐ accepted or b)☒ objected to by the Examiner.

Applicant may not request that any objection to the drawing(s) be held in abeyance. See 37 CFR 1.85(a).

Replacement drawing sheet(s) including the correction is required if the drawing(s) is objected to. See 37 CFR 1.121(d).

11)☐ The oath or declaration is objected to by the Examiner. Note the attached Office Action or form PTO-152.

Priority under 35 U.S.C. § 119

12)☐ Acknowledgment is made of a claim for foreign priority under 35 U.S.C. § 119(a)-(d) or (f).

a)☐ All b)☐ Some * c)☐ None of:

1.☐ Certified copies of the priority documents have been received.

2.☐ Certified copies of the priority documents have been received in Application No. _____.

3.☐ Copies of the certified copies of the priority documents have been received in this National Stage application from the International Bureau (PCT Rule 17.2(a)).

* See the attached detailed Office action for a list of the certified copies not received.

Attachment(s)

1) ☒ Notice of References Cited (PTO-892)

2) ☐ Notice of Draftsperson's Patent Drawing Review (PTO-948)

3) ☒ Information Disclosure Statement(s) (PTO-1449 or PTO/SB/08) Paper No(s)/Mail Date 10/26/2004.

4) ☐ Interview Summary (PTO-413) Paper No(s)/Mail Date. _____ .

5) ☐ Notice of Informal Patent Application (PTO-152)

6) ☐ Other: _____.

DETAILED ACTION

Claim Objections

1. Claim 7 is objected to under 37 CFR 1.75(c) as being in improper form because a multiple dependent claim should refer to other claims in the alternative only and/or cannot depend from any other multiple dependent claim. See MPEP § 608.01(n). Accordingly, the claim 7 has not been further treated on the merits.

Drawings

2. The drawings are objected to as failing to comply with 37 CFR 1.84(p)(5) because they include the following reference character(s) not mentioned in the description: 9, fig. 2.

The drawings are objected to as failing to comply with 37 CFR 1.84(p)(5) because they do not include the following reference sign(s) mentioned in the description: roller assembly 7, page 5, lines 7, 10 etc.

Corrected drawing sheets in compliance with 37 CFR 1.121(d), or amendment to the specification to add the reference character(s) in the description in compliance with 37 CFR 1.121(b) are required in reply to the Office action to avoid abandonment of the application. Any amended replacement-drawing sheet should include all of the figures appearing on the immediate prior version of the sheet, even if only one figure is being amended. Each drawing sheet submitted after the filing date of an application must be labeled in the top margin as either "Replacement Sheet" or "New Sheet" pursuant to 37 CFR 1.121(d). If the changes are not accepted by the examiner, the applicant will be

notified and informed of any required corrective action in the next Office action. The objection to the drawings will not be held in abeyance.

Claim Rejections - 35 USC § 112

3. The following is a quotation of the second paragraph of 35 U.S.C. 112:

> The specification shall conclude with one or more claims particularly pointing out and distinctly claiming the subject matter which the applicant regards as his invention.

4. Claim 8 is rejected under 35 U.S.C. 112, second paragraph, as being indefinite for failing to particularly point out and distinctly claim the subject matter which applicant regards as the invention.

Claim 8 recites the limitation "the predetermined distance" in lines 1-2. There is insufficient antecedent basis for this limitation in the claim.

Claim 8 recites the limitation "said retarder", "said feed wheel" in line 2. There is insufficient antecedent basis for this limitation in the claim.

Claim Rejections - 35 USC § 102

5. The following is a quotation of the appropriate paragraphs of 35 U.S.C. 102 that form the basis for the rejections under this section made in this Office action:

> A person shall be entitled to a patent unless --
>
> (b) the invention was patented or described in a printed publication in this or a foreign country or in public use or on sale in this country, more than one year prior to the date of application for patent in the United States.

6. Claims 1-4 and 8 are rejected under 35 U.S.C. 102(b) as being anticipated by Lindsay et al. (6554271).

Lindsay et al. disclose an automatic paper folder comprising a paper feed assembly (1, fig. 1), a first fold table assembly (147, fig. 6), a second fold table

assembly (149, fig. 6), an exit conveyor table assembly (15, fig. 6), and a roller drive assembly (11, fig. 6), which meets all the claimed limitations.

Regarding claim 2, Lindsay et al. disclose that the paper feed assembly comprises a paper feed table assembly (6, fig. 3) and a paper feed control assembly (9, fig. 4).

Regarding claim 3, Lindsay et al. disclose that the paper feed table assembly comprises a feed wheel (60, fig. 4), the feed wheel pivotably disposed on the paper feed table assembly.

Regarding claim 8, Lindsay et al. disclose that the predetermined distance between the feed wheel and the retarder (127, fig. 4) is smaller than the thickness of the paper being processed, whereby providing for the processing of a stack of paper in such manner that only one sheet of paper at the time is fed into the automatic paper folder.

Allowable Subject Matter

7. Claims 5 and 6 are objected to as being dependent upon a rejected base claim, but would be allowable if rewritten in independent form including all of the limitations of the base claim and any intervening claims.

Conclusion

8. The prior art made of record and not relied upon is considered pertinent to applicant's disclosure.

9. Any inquiry concerning this communication or earlier communications from the examiner should be directed to Hemant M. Desai whose telephone number is (571) 272-4458. The examiner can normally be reached on 7:00 AM-5: 30 PM, Mon-Thurs..

If attempts to reach the examiner by telephone are unsuccessful, the examiner's supervisor, Rinaldi I. Rada can be reached on (571) 272-4467. The fax phone number for the organization where this application or proceeding is assigned is 571-273-8300.

Information regarding the status of an application may be obtained from the Patent Application Information Retrieval (PAIR) system. Status information for published applications may be obtained from either Private PAIR or Public PAIR. Status information for unpublished applications is available through Private PAIR only. For more information about the PAIR system, see http://pair-direct.uspto.gov. Should you have questions on access to the Private PAIR system, contact the Electronic Business Center (EBC) at 866-217-9197 (toll-free).

Hemant M Desai
Examiner
Art Unit 3721

HMD

UNITED STATES PATENT AND TRADEMARK OFFICE

Commissioner for Patents
United States Patent and Trademark Office
P.O. Box 1450
Alexandria, VA 22313-1450
www.uspto.gov

DONALD T. SHOEBRIDGE
4402 N. 750 WEST
HUNTINGTON IN 46750

COPY MAILED
APR 03 2007
OFFICE OF PETITIONS

In re Application of	:	
Shoebridge et al.	:	
Application No. 10/973,839	:	ON PETITION
Filed: October 26, 2004	:	
Attorney Docket No. AUTOMATICFOLDER	:	

This is a decision on the petition under 37 C.F.R. § 1.137(b), filed February 5, 2007, to revive the above-identified application.

The petition is **GRANTED.**

The petition satisfies the conditions for revival pursuant to the provisions of 37 CFR 1.137(b) in that (1) the reply in the form of corrected drawings; (2) the petition fee; and (3) the required statement of unintentional delay have been received. Accordingly, the response has been accepted as having been unintentionally delayed.

This matter is being referred to the Publishing Division for processing into a patent.

Telephone inquiries regarding this decision should be directed to the undersigned at (571) 272-3206.

Liana Walsh
Petitions Examiner
Office of Petitions

UNITED STATES PATENT AND TRADEMARK OFFICE

UNITED STATES DEPARTMENT OF COMMERCE
United States Patent and Trademark Office
Address: COMMISSIONER FOR PATENTS
P.O. Box 1450
Alexandria, Virginia 22313-1450
www.uspto.gov

DOCKET CLERK
P.O. DRAWER 800889
DALLAS, TX 75380

Mail Date: 04/20/2010

Applicant	: Laurence D. Lewicki	: DECISION ON REQUEST FOR
Patent Number	: 7571360	: RECALCULATION of PATENT
Issue Date	: 08/04/2009	: TERM ADJUSTMENT IN VIEW
Appliction No	: 10/973,843	: OF WYETH AND NOTICE OF INTENT TO
Filed	: 10/26/2004	: ISSUE CERTIFICATE OF CORRECTION
		:

The Request for Recalculation is **GRANTED** to the extent indicated.

The patent term adjustment has been determined to be **815** days. The USPTO will *sua sponte* issue a certificate of correction reflecting the amount of PTA days determined by the recalculation.

Prior to the issuance of the certificate of correction, the USPTO will afford patentee an opportunity to be heard and request reconsideration. Accordingly, patentee has **one month or thirty (30) days**, whichever is longer, to file a request for reconsideration of this patent term adjustment calculation. See 35 U.S.C. 154(b)(3)(B)(ii) and 37 CFR 1.322(a)(4). No extensions of time will be granted under 37 CFR 1.136.

Patentee should use document code PET.OP if electronically filing a request for reconsideration of this patent term adjustment calculation. The patentee must also include the information required by 37 CFR 1.705(b)(2) and the fee required by 37 CFR 1.18(e). If patentee does not file a timely request for reconsideration of this patent term adjustment calculation including the information required by 37 CFR 1.705(b)(2) and the fee required by 37 CFR 1.18(e), the USPTO will issue a certificate of correction reflecting the PTA determination noted above.

Patentee should be aware that in order to preserve the right to review in the United States District Court for the District of Columbia of the USPTO patent term adjustment determination, patentee must ensure that he or she also take the steps required under 35 U.S.C. 154(b)(4)(A) in a timely manner. Nothing in the request for recalculation should be construed as providing an alternative time frame for commencing a civil action under 35 U.S.C. 154(b)(4)(A).

Any questions concerning this decision should be directed to the Office of Patent Legal Administration at 571-272-7702.

UNITED STATES PATENT AND TRADEMARK OFFICE

Commissioner for Patents
United States Patent and Trademark Office
P.O. Box 1450
Alexandria, VA 22313-1450
www.uspto.gov

NOV 08 2005

John R. McNelis
FENWICK & WEST LLP
Silicon Valley Center
801 California Street
Mountain View CA 94041

In re Application of:	:	
Steven W. Meeks	:	
Serial No.: 10/973,855	:	DECISION ON REQUEST TO WITHDRAW FROM RECORD
Filed: October 25, 2004	:	
Attorney Docket No.: **20830-09604**	:	

This is a decision on the request to withdraw as attorney/agent of record under 37 C.F.R. § 1.36, filed June 17, 2005.

A grantable request to withdraw as attorney of record must be signed by every attorney seeking to withdraw or contain a clear indication that one attorney is signing on behalf of others. A request to withdraw will not be approved unless at least thirty (30) days would remain between the date of approval and the later of the expiration date of a time to file a response or the expiration date of the maximum time period, which can be extended under 37 C.F.R. § 1.136(a).

The request meets all the above stated requirements. The request was signed by John T. McNelis, on behalf of himself and all the attorneys/agents of record.

The request is **APPROVED**.

All future communications from the Office will be directed to the inventor, Steven W. Meeks, at the below address, until otherwise notified by applicant.

Inquiries related to this decision should be directed to Clayton E. LaBalle at (571) 272-1594.

Clayton E. LaBalle, Special Programs Examiner
Technology Center 2800
Semiconductors, Electrical and Optical
Systems and Components

cc: Caven & Aghevil LLC
9249 S Broadway Blvd., Unit 200-201
Highlands Ranch CO 80129

UNITED STATES PATENT AND TRADEMARK OFFICE

Commissioner for Patents
United States Patent and Trademark Office
P.O. Box 1450
Alexandria, VA 22313-1450
www.uspto.gov

Perkins, Coie, LLP
Patent-Sea
P.O. Box 1247
Seattle, WA 98111-1247

COPY MAILED

OCT 17 2008

OFFICE OF PETITIONS

In re Application of	:	
Stanley Liow et al.	:	
Application No. 10/973,864	:	DECISION ON PETITION
Filed: October 25, 2004	:	
Attorney Docket No. 320528660US2	:	

This is a decision on the petition under 37 CFR 1.137(b), filed October 1, 2008, to revive the above-identified application.

The petition is **GRANTED**.

This application became abandoned for failure to timely pay the issue and publication fees on or before September 17, 2008, as required by the Notice of Allowance and Fee(s) Due, mailed June 17, 2008. Accordingly, the date of abandonment of this application is September 18, 2008. A Notice of Abandonment was mailed on October 3, 2008.

The petition satisfies the requirements of 37 CFR 1.137(b) in that petitioner has supplied (1) the reply in the form of payment of the issue fee of $1440 and the publication fee of $300, (2) the petition fee of $1540, and (3) a proper statement of unintentional delay. Accordingly, the issue and publication fees are accepted as being unintentionally delayed.

Telephone inquiries concerning this decision should be directed to Kimberly Inabinet at (571) 272-4618.

This application is being referred to the Office of Data Management for further processing into a patent.

Carl Friedman
Petitions Examiner
Office of Petitions

UNITED STATES PATENT AND TRADEMARK OFFICE

Commissioner for Patents
United States Patent and Trademark Office
P.O. Box 1450
Alexandria, VA 22313-1450
www.uspto.gov

COPY MAILED
NOV 01 2006
OFFICE OF PETITIONS

Ancel W. Lewis, Jr.
425 West Mulberry
Suite 101
Fort Collins, CO 80521

In re Application of	:	
Kenneth C. Hopkins	:	
Application No. 10/973,873	:	DECISION ON PETITION
Filed: July 17, 2006	:	TO WITHDRAW
Attorney Docket No.	:	FROM RECORD

This is a decision on the Request to Withdraw as attorney or agent of record under 37 C.F.R. § 1.36(b), filed July 17, 2006.

The request is **NOT APPROVED**.

A grantable request to withdraw as attorney/agent of record must be signed by every attorney/agent seeking to withdraw or contain a clear indication that one attorney is signing on behalf of another/others. A request to withdraw will not be approved unless at least 30 (thirty) days would remain between the date of approval and the later of the expiration date of a time to file a response or the expiration date of the maximum time period which can be extended under 37 C.F.R. § 1.136(a).

The request cannot be approved because there remains less than 30 (thirty days) between the date of this decision and the maximum extendable time period for filing a response to the Office action mailed on May 3, 2006 and because no reasons for withdrawal have been provided. The Office cannot, at this time, determine whether practitioner's request is one of the mandatory or permissive reasons enumerated in 37 CFR 10.40. Any subsequent requests must include reasons for withdrawal. Please note that there is a space provided for on PTO/SB/83 (Request to Withdraw as Attorney or Agent) to supply practitioner's reasons.

All future communications from the Office will continue to be directed to the above-listed address until otherwise notified by applicant.

Telephone inquiries concerning this decision should be directed to Terri Williams at 571-272- 2991.

Terri Williams
for
David Bucci
Petitions Examiner
Office of Petitions

cc: **Kenneth C. Hopkins**
1421 1/2 N. Taft Hill Road
Fort Collins, Colorado 80521

SPE RESPONSE FOR CERTIFICATE OF CORRECTION

Paper No.: 06/30/2009

DATE : 06-24-09

TO SPE OF : ART UNIT 2839

SUBJECT : Request for Certificate of Correction for Appl. No.: 10/973880 Patent No.: 7255591

Please respond to this request for a certificate of correction within 7 days.

FOR IFW FILES:

Please review the requested changes/corrections as shown in the **COCIN** document(s) in the IFW application image. No new matter should be introduced, nor should the scope or meaning of the claims be changed.

Please complete the response (see below) and forward the completed response to scanning using document code **COCX**.

FOR PAPER FILES:

Please review the requested changes/corrections as shown in the attached certificate of correction. Please complete this form (see below) and forward it with the file to:

Certificates of Correction Branch (CofC)
South Tower - 9A22
Palm Location 7580

Angela Green
Certificates of Correction Branch
703-756-1541

Thank You For Your Assistance

The request for issuing the above-identified correction(s) is hereby:
Note your decision on the appropriate box.

- ☑ **Approved** — **All** changes apply.
- ☐ **Approved in Part** — Specify below which changes **do not** apply.
- ☐ **Denied** — State the reasons for denial below.

Comments: _____

/Tulsidas C. Patel/
SPE

2839
Art Unit

UNITED STATES PATENT AND TRADEMARK OFFICE

UNITED STATES DEPARTMENT OF COMMERCE
United States Patent and Trademark Office
Address: COMMISSIONER FOR PATENTS
P.O. Box 1450
Alexandria, Virginia 22313-1450
www.uspto.gov

STERNE, KESSLER, GOLDSTEIN & FOX P.L.L.C.
1100 NEW YORK AVENUE, N.W.
WASHINGTON, DC 20005

Mail Date: 04/21/2010

Applicant	: George W. McClurg	: DECISION ON REQUEST FOR
Patent Number	: 7586591	: RECALCULATION of PATENT
Issue Date	: 09/08/2009	: TERM ADJUSTMENT IN VIEW
Appliction No	: 10/973,898	: OF WYETH AND NOTICE OF INTENT TO
Filed	: 10/27/2004	: ISSUE CERTIFICATE OF CORRECTION
		:

The Request for Recalculation is **GRANTED** to the extent indicated.

The patent term adjustment has been determined to be **1295** days. The USPTO will *sua sponte* issue a certificate of correction reflecting the amount of PTA days determined by the recalculation.

Prior to the issuance of the certificate of correction, the USPTO will afford patentee an opportunity to be heard and request reconsideration. Accordingly, patentee has **one month or thirty (30) days**, whichever is longer, to file a request for reconsideration of this patent term adjustment calculation. See 35 U.S.C. 154(b)(3)(B)(ii) and 37 CFR 1.322(a)(4). No extensions of time will be granted under 37 CFR 1.136.

Patentee should use document code PET.OP if electronically filing a request for reconsideration of this patent term adjustment calculation. The patentee must also include the information required by 37 CFR 1.705(b)(2) and the fee required by 37 CFR 1.18(e). If patentee does not file a timely request for reconsideration of this patent term adjustment calculation including the information required by 37 CFR 1.705(b)(2) and the fee required by 37 CFR 1.18(e), the USPTO will issue a certificate of correction reflecting the PTA determination noted above.

Patentee should be aware that in order to preserve the right to review in the United States District Court for the District of Columbia of the USPTO patent term adjustment determination, patentee must ensure that he or she also take the steps required under 35 U.S.C. 154(b)(4)(A) in a timely manner. Nothing in the request for recalculation should be construed as providing an alternative time frame for commencing a civil action under 35 U.S.C. 154(b)(4)(A).

Any questions concerning this decision should be directed to the Office of Patent Legal Administration at 571-272-7702.

UNITED STATES PATENT AND TRADEMARK OFFICE

UNITED STATES DEPARTMENT OF COMMERCE
United States Patent and Trademark Office
Address: COMMISSIONER FOR PATENTS
P.O. Box 1450
Alexandria, Virginia 22313-1450
www.uspto.gov

STERNE, KESSLER, GOLDSTEIN & FOX P.L.L.C.
1100 NEW YORK AVENUE, N.W.
WASHINGTON, DC 20005

Mail Date: 05/18/2010

Applicant : George W. McClurg
Patent Number : 7586591
Issue Date : 09/08/2009
Application No : 10/973,898
Filed : 10/27/2004

: NOTICE CONCERNING IMPROPER
: CALCULATION OF PATENT TERM
: ADJUSTMENT BASED UPON USPTO
: IMPROPERLY MEASURING REDUCTION
: PERIOD UNDER 37 CFR 1.704(c)(10).

The United States Patent and Trademark Office (USPTO) discovered that in processing the recent recalculation decisions mailed in response to patentee's filed Request for Recalculation of Patent Term Adjustment in view of Wyeth, the USPTO improperly measured the reduction period for reductions under 37 CFR 1.704(c)(10). Pursuant to 37 CFR 1.704(c)(10), patentee's reduction begins on the date of filing the amendment under 37 CFR 1.312 ("1.312 amendment") or other related paper and ends on the date that the Office mails a response to the filing of the 1.312 amendment or other paper. It has been discovered that during the recalculation, the calculation failed to the limit the reduction to the mail date of the response to the 1.312 amendment or other paper. Accordingly, patentee's reductions were greater than warranted.

This notice **VACATES** the previous GRANTED request for recalculation and provides patentee with a revised GRANTED recalculation.

The patent term adjustment has been determined to be **1336** days. The USPTO will *sua sponte* issue a certificate of correction reflecting the amount of patent term adjustment (PTA) days determined by the recalculation.

Prior to the issuance of the certificate of correction, the USPTO will afford patentee an opportunity to be heard and request reconsideration. Accordingly, patentee has **one month or thirty (30) days** from the mail date of this notice, whichever is longer, to file a request for reconsideration of this PTA calculation. See 35 U.S.C. § 154(b)(3)(B)(ii) and 37 CFR 1.322(a)(4).

Patentee should use document code PET.OP if electronically filing a request for reconsideration of this PTA calculation. The patentee must also include the information required by 37 CFR 1.705(b)(2), and the fee required by 37 CFR 1.18(e). If patentee does not file a timely request for reconsideration of this PTA calculation, including the information required by 37 CFR 1.705(b)(2) and the fee required by 37 CFR 1.18(e), the USPTO will issue a certificate of correction reflecting the PTA determination noted above.

Patentee should be aware that in order to preserve the right of review of the USPTO's PTA determination in the United States District Court for the District of Columbia, patentee must ensure that the steps required under 35 U.S.C. § 154 (b)(4) are taken in a timely manner. Nothing in the request for recalculation should be construed as providing an alternative time frame for commencing a civil action under 35 U.S.C. § 154(b)(4).

UNITED STATES PATENT AND TRADEMARK OFFICE

UNITED STATES DEPARTMENT OF COMMERCE
United States Patent and Trademark Office
Address: COMMISSIONER FOR PATENTS
P.O. Box 1450
Alexandria, Virginia 22313-1450
www.uspto.gov

Robert D. Shedd, Patent Operations
THOMSON Licensing LLC
P.O. Box 5312
Princeton, NJ 08543-5312

Mail Date: 04/21/2010

Applicant	: Loic Nunez	: DECISION ON REQUEST FOR
Patent Number	: 7574668	: RECALCULATION of PATENT
Issue Date	: 08/11/2009	: TERM ADJUSTMENT IN VIEW
Appliction No	: 10/973,907	: OF WYETH AND NOTICE OF INTENT TO
Filed	: 10/26/2004	: ISSUE CERTIFICATE OF CORRECTION
		:

The Request for Recalculation is **GRANTED** to the extent indicated.

The patent term adjustment has been determined to be **667** days. The USPTO will *sua sponte* issue a certificate of correction reflecting the amount of PTA days determined by the recalculation.

Prior to the issuance of the certificate of correction, the USPTO will afford patentee an opportunity to be heard and request reconsideration. Accordingly, patentee has **one month or thirty (30) days**, whichever is longer, to file a request for reconsideration of this patent term adjustment calculation. See 35 U.S.C. 154(b)(3)(B)(ii) and 37 CFR 1.322(a)(4). No extensions of time will be granted under 37 CFR 1.136.

Patentee should use document code PET.OP if electronically filing a request for reconsideration of this patent term adjustment calculation. The patentee must also include the information required by 37 CFR 1.705(b)(2) and the fee required by 37 CFR 1.18(e). If patentee does not file a timely request for reconsideration of this patent term adjustment calculation including the information required by 37 CFR 1.705(b)(2) and the fee required by 37 CFR 1.18(e), the USPTO will issue a certificate of correction reflecting the PTA determination noted above.

Patentee should be aware that in order to preserve the right to review in the United States District Court for the District of Columbia of the USPTO patent term adjustment determination, patentee must ensure that he or she also take the steps required under 35 U.S.C. 154(b)(4)(A) in a timely manner. Nothing in the request for recalculation should be construed as providing an alternative time frame for commencing a civil action under 35 U.S.C. 154(b)(4)(A).

Any questions concerning this decision should be directed to the Office of Patent Legal Administration at 571-272-7702.

UNITED STATES PATENT AND TRADEMARK OFFICE

Commissioner for Patents
United States Patent and Trademark Office
P.O. Box 1450
Alexandria, VA 22313-1450
www.uspto.gov

STERNE, KESSLER, GOLDSTEIN & FOX PLLC
1100 NEW YORK AVENUE, N.W.
WASHINGTON DC 20005

COPY MAILED

MAR 1 1 2005

OFFICE OF PETITIONS

ON PETITION

In re Application of :
Sorrells, et al. :
Application No. 10/973,917 :
Filed: October 27, 2004 :
Attorney Docket No. 1744.0330003 :
For: UNIVERSAL PLATFORM MODULE AND METHODS AND APPARATUSES RELATING THERETO ENABLED BY UNIVERSAL FREQUENCY TRANSLATION TECHNOLOGY

This is a decision on the petition filed January 26, 2005, requesting, in effect, withdrawal of a Notice mailed December 8, 2004.

The application was filed on October 27, 2004. However, on December 8, 2004, The Office of Initial Patent Examination mailed a "Notice of Omitted Item(s) in a Nonprovisional Application" (Notice) stating that the application had been accorded a filing date of October 27, 2004, and advising applicant that figure 20A-1 appeared to have been omitted.

In response, the present petition was filed. Petitioners argue that the drawing should be included with the papers filed on October 27, 2004, because (1) it is not new matter and (2) it was filed in prior application No. 09/569,044, the entire disclosure of which was incorporated by reference at the time of this application's filing.

The petition is dismissed.

The mailing of a "Notice of Omitted Items" permits the applicant to either: (1) promptly establish prior receipt in the PTO of the items at issue (generally by way of a date-stamped postcard receipt (MPEP 503)), or (2) promptly submit the omitted items in a nonprovisional application and accept the date of such submission as the application filing date. An applicant asserting that the missing items were in fact deposited in the PTO with the application papers must file a petition (and the appropriate petition fee) with evidence of such deposit. An applicant desiring to submit the omitted items in a nonprovisional application and accept the date of such submission as the application filing date must file any omitted items with an oath or declaration in compliance with 37 CFR 1.63 and 1.64 referring to such items and a petition under 37 CFR 1.182 (with the petition fee under 37 CFR 1.17(h)) requesting the later filing date within two months of the date of the "Notice of Omitted Items" (37 CFR 1.181(f)).

In this case, petitioners neither assert that the missing drawing was actually deposited in the PTO on October 27, 2004 with the other application papers nor request a later filing date.

Instead, applicants seek to add the figure to the present application on the basis that the figure

does not contain new matter. However, no petition is necessary for that purpose. Additional figures may be entered by the primary examiner without a petition so long as the pages contain no new matter. See MPEP § 608.02(a).

MPEP 201.06(c) states that:

> . . . an applicant may incorporate by reference the prior application by including, in the application-as-filed, a statement that such specifically enumerated prior application or applications are "hereby incorporated herein by reference." The statement may appear in the specification or in the application transmittal letter. The inclusion of this incorporation by reference of the prior application(s) will permit an applicant to amend the continuing application to include any subject matter in such prior application(s), without the need for a petition. (emphasis supplied)

If applicants desire that figure 20A-1 be added to the application, the appropriate procedure is by way of amendment requesting the entry of the figure.

Accordingly, the petition is inappropriate and is subject to dismissal.

The petition fee will not be refunded, since the petition was not necessitated by any error on the part of the Office.

The application is being returned to the Office of Initial Patent Examination for further processing with a filing date of October 27, 2004. Drawing figure 20A-1 will not be processed at this time.

Thereafter, the application will be forwarded to Technology Center 2600 for examination in due course. The examiner may consider the January 26, 2005 "Request to Approve Proposed Drawing Corrections" as an amendment requesting the entry of the figure or the examiner may require a more formal submission.

Telephone inquiries specific to this matter should be directed to the undersigned at (571) 272-3230.

E Shirene Willis

E. Shirene Willis
Senior Petitions Attorney
Office of Petitions
Office of the Deputy Commissioner
for Patent Examination Policy

UNITED STATES PATENT AND TRADEMARK OFFICE

Commissioner for Patents
United States Patent and Trademark Office
P.O. Box 1450
Alexandria, VA 22313-1450
www.uspto.gov

LARSON, NEWMAN, ABEL, POLANSKY & WHITE, L
5914 WEST COURTYARD DRIVE
SUITE 200
AUSTIN, TX 78730

COPY MAILED
JUN 23 2006
OFFICE OF PETITIONS

In re Application of	:	
Joy et al.	:	DECISION ON PETITION
Application No. 10/973,931	:	TO WITHDRAW
Filed: October 26, 2004	:	FROM RECORD
Attorney Docket No. 1017-0039US	:	

This is a decision on the Request to Withdraw as attorney or agent of record under 37 C.F.R. § 1.36(b), filed October 28, 2005.

The request is **NOT APPROVED** as moot.

A review of the file record indicates that the power of attorney to the attorneys/agents associated with Customer Number 34456 has been revoked by the assignee of the entire interest of the patent application. Accordingly, the request to withdraw under 37 C.F.R. § 1.36(b) is moot.

All future communications from the Office will continue to be directed to the first below-listed address until otherwise notified by applicant.

Telephone inquires concerning this decision should be directed to Petitions Examiner Liana Chase at 571-272- 3206. All other inquires concerning either the examination or status of the application should be directed to the Technology Center.

David Bucci
Petitions Examiner
Office of Petitions

cc:

TOLER SCHAFFER, LLP
5000 PLAZA ON THE LAKES
SUITE 265
AUSTIN TX 78746

MINTZ, LEVIN, COHN, FERRIS, GLOVSKY AND POPEO, P.C.
ONE FINANCIAL CENTER
BOSTON, MA 02111

UNITED STATES PATENT AND TRADEMARK OFFICE

UNITED STATES DEPARTMENT OF COMMERCE
United States Patent and Trademark Office
Address: COMMISSIONER FOR PATENTS
P.O. Box 1450
Alexandria, Virginia 22313-1450
www.uspto.gov

LANDO & ANASTASI, LLP
ONE MAIN STREET, SUITE 1100
CAMBRIDGE, MA 02142

Mail Date: 04/20/2010

Applicant	: Ryan Joy	: DECISION ON REQUEST FOR
Patent Number	: 7627651	: RECALCULATION of PATENT
Issue Date	: 12/01/2009	: TERM ADJUSTMENT IN VIEW
Appliction No	: 10/973,931	: OF WYETH AND NOTICE OF INTENT TO
Filed	: 10/26/2004	: ISSUE CERTIFICATE OF CORRECTION
		:

The Request for Recalculation is **GRANTED** to the extent indicated.

The patent term adjustment has been determined to be **985** days. The USPTO will *sua sponte* issue a certificate of correction reflecting the amount of PTA days determined by the recalculation.

Prior to the issuance of the certificate of correction, the USPTO will afford patentee an opportunity to be heard and request reconsideration. Accordingly, patentee has **one month or thirty (30) days**, whichever is longer, to file a request for reconsideration of this patent term adjustment calculation. See 35 U.S.C. 154(b)(3)(B)(ii) and 37 CFR 1.322(a)(4). No extensions of time will be granted under 37 CFR 1.136.

Patentee should use document code PET.OP if electronically filing a request for reconsideration of this patent term adjustment calculation. The patentee must also include the information required by 37 CFR 1.705(b)(2) and the fee required by 37 CFR 1.18(e). If patentee does not file a timely request for reconsideration of this patent term adjustment calculation including the information required by 37 CFR 1.705(b)(2) and the fee required by 37 CFR 1.18(e), the USPTO will issue a certificate of correction reflecting the PTA determination noted above.

Patentee should be aware that in order to preserve the right to review in the United States District Court for the District of Columbia of the USPTO patent term adjustment determination, patentee must ensure that he or she also take the steps required under 35 U.S.C. 154(b)(4)(A) in a timely manner. Nothing in the request for recalculation should be construed as providing an alternative time frame for commencing a civil action under 35 U.S.C. 154(b)(4)(A).

Any questions concerning this decision should be directed to the Office of Patent Legal Administration at 571-272-7702.

UNITED STATES PATENT AND TRADEMARK OFFICE

Commissioner for Patents
United States Patent and Trademark Office
P.O. Box 1450
Alexandria, VA 22313-1450
www.uspto.gov

Wilson Sonsini Goodrich & Rosati
650 Page Mill Road
Palo Alto, CA 94304-1050

COPY MAILED

JUN 1 8 2007

OFFICE OF PETITIONS

In re Application of	:	
Mark K. Kuiper et al.	:	
Application No. 10/973,939	:	DECISION ON PETITION
Filed: October 25, 2004	:	TO WITHDRAW
Attorney Docket No. 29914-701.503	:	FROM RECORD
	:	

This is a decision on the Request to Withdraw as attorney or agent of record under 37 C.F.R. § 1.36(b), filed December 8, 2006.

The request is **NOT APPROVED** as moot.

A review of the file record indicates that the power of attorney to Wilson Sonsini Goodrich & Rosati has been revoked by the assignee of the patent application on January 5, 2007. Accordingly, the request to withdraw under 37 C.F.R. § 1.36(b) is moot.

All future communications from the Office will continue to be directed to the below-listed address until otherwise notified by applicant.

Telephone inquires concerning this decision should be directed to Terri Williams at 571-272-2991.

Terri Williams
Petitions Examiner
Office of Petitions

cc: **Shay Law Group LLP**
2755 Campus Drive
Suite 210
San Mateo, CA 94403

UNITED STATES PATENT AND TRADEMARK OFFICE

UNITED STATES DEPARTMENT OF COMMERCE
United States Patent and Trademark Office
Address: COMMISSIONER FOR PATENTS
P.O. Box 1450
Alexandria, Virginia 22313-1450
www.uspto.gov

MEDTRONIC, INC.
710 MEDTRONIC PARKWAY NE
MINNEAPOLIS, MN 55432-9924

Mail Date: 04/20/2010

Applicant	: Martin T. Gerber	: DECISION ON REQUEST FOR
Patent Number	: 7593777	: RECALCULATION of PATENT
Issue Date	: 09/22/2009	: TERM ADJUSTMENT IN VIEW
Appliction No	: 10/973,944	: OF WYETH AND NOTICE OF INTENT TO
Filed	: 10/26/2004	: ISSUE CERTIFICATE OF CORRECTION
		:

The Request for Recalculation is **GRANTED** to the extent indicated.

The patent term adjustment has been determined to be **1366** days. The USPTO will *sua sponte* issue a certificate of correction reflecting the amount of PTA days determined by the recalculation.

Prior to the issuance of the certificate of correction, the USPTO will afford patentee an opportunity to be heard and request reconsideration. Accordingly, patentee has **one month or thirty (30) days**, whichever is longer, to file a request for reconsideration of this patent term adjustment calculation. See 35 U.S.C. 154(b)(3)(B)(ii) and 37 CFR 1.322(a)(4). No extensions of time will be granted under 37 CFR 1.136.

Patentee should use document code PET.OP if electronically filing a request for reconsideration of this patent term adjustment calculation. The patentee must also include the information required by 37 CFR 1.705(b)(2) and the fee required by 37 CFR 1.18(e). If patentee does not file a timely request for reconsideration of this patent term adjustment calculation including the information required by 37 CFR 1.705(b)(2) and the fee required by 37 CFR 1.18(e), the USPTO will issue a certificate of correction reflecting the PTA determination noted above.

Patentee should be aware that in order to preserve the right to review in the United States District Court for the District of Columbia of the USPTO patent term adjustment determination, patentee must ensure that he or she also take the steps required under 35 U.S.C. 154(b)(4)(A) in a timely manner. Nothing in the request for recalculation should be construed as providing an alternative time frame for commencing a civil action under 35 U.S.C. 154(b)(4)(A).

Any questions concerning this decision should be directed to the Office of Patent Legal Administration at 571-272-7702.

UNITED STATES PATENT AND TRADEMARK OFFICE

Commissioner for Patents
United States Patent and Trademark Office
P.O. Box 1450
Alexandria, VA 22313-1450
www.uspto.gov

Paper No.

Patent Consultants & Services, Inc.
204 Bouchillion Drive
Greenville SC 29615

MAILED

JUL 12 2010

OFFICE OF PETITIONS

In re Application of :
Reese :
Application No. 10/973,960 :
Patent No. 6,958,010 : DECISION ON PETITION
Filed: October 26, 2004 : UNDER 37 C.F.R. § 1.378(C)
Issue Date: October 25, 2005 :
Attorney Docket Number: TB&B02- :
1 :
Title: CRAWL SPACE VENTILATION :
SYSTEM :

This is a decision on the petition filed pursuant to 37 C.F.R. § 1.378(c) on February 16, 2010, to accept the unintentionally delayed payment of a maintenance fee for the above-identified patent.

This petition pursuant to 37 C.F.R. § 1.378(c) is **GRANTED**.

The patent issued on October 25, 2005. The grace period for paying the 3½-year maintenance fee provided in 37 C.F.R. § 1.362(e) expired at midnight on October 25, 2009, with no payment received. Accordingly, the patent expired on October 25, 2009 at midnight.

A grantable petition pursuant to 37 C.F.R. § 1.378(c) must be accompanied by:

(1) The maintenance fee as set forth in 37 C.F.R. §§ 1.362(e) and 1.20;
(2) The surcharge for accepting a maintenance fee after expiration of a patent for non-timely payment of a maintenance fee, as set forth in 37 C.F.R. § 1.20;
(3) A statement that the delay was unintentional from

a proper party in interest, and;

(4) The petition must be filed within 24 months of the date of expiration.

With this petition, Petitioner submitted the surcharge associated with a petition to accept late payment of a maintenance fee as unintentional, the 3½-year maintenance fee, and a statement that the delay in payment of the maintenance fee was unintentional. This petition was timely filed within twenty-four months after the expiration of the six-month grace period.

Petitioner has met each of the requirements of Rule 1.378(c).

Accordingly, the maintenance fee in this case is hereby accepted and the above-identified patent is hereby reinstated as of the mail date of this decision.

Telephone inquiries regarding this decision should be directed to the undersigned at (571) 272-3225.[1] Inquiries pertaining to the submission of maintenance fees should be directed to the Maintenance Fee branch at 571-272-6500.

/Paul Shanoski/
Paul Shanoski
Senior Attorney
Office of Petitions

1 Petitioner will note that all practice before the Office should be in writing, and the action of the Office will be based exclusively on the written record in the Office. See 37 C.F.R. § 1.2. As such, Petitioner is reminded that no telephone discussion may be controlling or considered authority for any further action(s) of Petitioner.

UNITED STATES PATENT AND TRADEMARK OFFICE

COMMISSIONER FOR PATENTS
UNITED STATES PATENT AND TRADEMARK OFFICE
P.O. BOX 1450
ALEXANDRIA, VA 22313-1450
www.uspto.gov

AKIKO KOBAYASHI
2313 CAMINO ROBLEDO
CARLSBAD CA 92009

COPY MAILED

DEC 27 2005

OFFICE OF PETITIONS

Applicant: Takahashi
Appl. No.: 10/973,962
Filing Date: October 25, 2004
Title: URINE SAMPLE COLLECTOR FOR WOMEN
Attorney Docket No.: MTU1Y04
Pub. No.: US 2005/0059907 A1
Pub. Date: March 17, 2005

This is a decision on the request for a corrected patent application publication under 37 CFR 1.221(b), filed on March 29, 2005, for the above-identified application

The request is DISMISSED.

Applicant requests that the application be republished because the patent application publication contains a material error on the front page of the publication, as it includes a foreign priority claim to JP 2001 – 099836, which was not made by applicant.

37 CFR 1.221 (b) is applicable "only when the Office makes a material mistake which is apparent from Office records.... Any request for a corrected publication or revised patent application publication other than provided as provided in paragraph (a) of this section must be filed within two months from the date of the patent application publication. This period is not extendable." A material mistake must affect the public's ability to appreciate the technical disclosure of the patent application publication, to determine the scope of the patent application publication, or to determine the scope of the provisional rights that an applicant may seek to enforce upon issuance of a patent. [1]

The error in the foreign priority information on the front page of the published patent application is an Office error but it is not a material error, as required by 37 CFR 1.221(b). The error in the foreign priority claim is not a material mistake because it does not affect the public's ability to appreciate the technical disclosure of the patent application publication, to determine the scope of the patent application publication or to determine the scope of the provisional rights that an applicant may seek to enforce upon issuance of a patent. The specification and claims were accurately published, thus one can read and understand the content of the application. The error

[1] Changes to Implement Eighteen-Month Publication of Patent Applications, 65 FR 57023, 57038 (Sept. 20, 2000), 1239, Off. Gaz. Pat. Office Notices 63, 75 (Oct. 10, 2000) (final rule).

also does not affect the use of the patent application publication as a prior art reference, because the foreign priority date is not useable as a reference date.

On December 8, 2004, a Filing Receipt was mailed, which included the improper foreign priority claim. To avoid this type of problem in the future, applicant's representative should make request a corrected filing receipt.

The applicant is advised that a "request for republication of an application previously published" may be filed under 37 CFR 1.221 (a). Such a request for republication "must include a copy of the application compliance with the Office's electronic filing system requirements and be accompanied by the publication fee set forth in § 1.18 (d) and the processing fee set forth in § 1.17 (i)." If the request for republication does not comply with the electronic filing system requirements, the republication will not take place and the publication fee set forth in § 1.18 (d) will be refunded. The processing fee will be retained.

Any request for republication under 37 CFR 1.221(a), must be submitted via the EFS system and questions or request for reconsideration of the decision, should be addressed as follows:

By mail to: Mail Stop PGPUB
Commissioner for Patents
P.O. Box 1450
Alexandria, Va. 22313-1450

By facsimile: 571-273-8300

Inquiries relating to this matter may be directed to Mark Polutta at (571) 272-7709 (voice).

Mark O. Polutta
Senior Legal Advisor
Office of Patent Legal Administration
Office of the Deputy Commissioner
for Patent Examination Policy

UNITED STATES PATENT AND TRADEMARK OFFICE

UNITED STATES DEPARTMENT OF COMMERCE
United States Patent and Trademark Office
Address: COMMISSIONER FOR PATENTS
P.O. Box 1450
Alexandria, Virginia 22313-1450
www.uspto.gov

APPLICATION NO.	FILING DATE	FIRST NAMED INVENTOR	ATTORNEY DOCKET NO.	CONFIRMATION NO.
10/973,970	10/27/2004	Elliot D. Lewis	14917.0554USU1	2812

27488 7590 01/27/2008
MERCHANT & GOULD (MICROSOFT)
P.O. BOX 2903
MINNEAPOLIS, MN 55402-0903

EXAMINER
LAI, MICHAEL C

ART UNIT	PAPER NUMBER
2157	

MAIL DATE	DELIVERY MODE
01/27/2008	PAPER

Please find below and/or attached an Office communication concerning this application or proceeding.

The time period for reply, if any, is set in the attached communication.

UNITED STATES PATENT AND TRADEMARK OFFICE

COMMISSIONER FOR PATENTS
UNITED STATES PATENT AND TRADEMARK OFFICE
P.O. BOX 1450
ALEXANDRIA, VA 22313-1450
www.uspto.gov

MAILED

JAN 28 2008

TECHNOLOGY CENTER 2100

Gregory D. Leibold
Merchant & Gould (Microsoft)
P.O. Box 2903
Minneapolis, MN 55402-0903

In re Application of:
Elliot LEWIS et al.
Appl. No.: 10/973,970
Filed: October 27, 2004
For: SYSTEM AND METHODS FOR PROVIDING NETWORK QUARANTINE

DECISION ON PETITION UNDER 37 CFR § 1.59

This is a decision on the petition under 37 CFR § 1.59(b), filed on 15 January 2008, to expunge information submitted pursuant to MPEP § 724.05.

The petition is **DISMISSED**.

Petitioner requests that the information submitted on 15 January 2008 be expunged from the record if found not to be important to a reasonable examiner in deciding whether to allow the application to issue as a patent. The petition fee set forth in 37 CFR § 1.17(g) has been paid.

The petition is premature because the application has not been allowed or abandoned. Accordingly, it is not appropriate to make a final determination of whether or not the material requested to be expunged is "material," with "materiality" being defined as any information which the examiner considers as being important to a determination of patentability of the claims. Thus, the petition to expunge must be dismissed at this time.

During prosecution on the merits, the examiner will determine whether or not the information submitted on 15 January 2008 is considered to be "material." Once prosecution on the merits is closed, applicant may re-submit a petition to expunge the information. No further fee is required for such a second submission of a petition under 37 CFR § 1.59 to expunge information. If the information is not considered by the examiner to be material, the information will be expunged from the application and may be returned to applicant.

Any inquiry concerning this decision should be directed to the undersigned whose telephone number is (571) 272-3613.

Vincent N. Trans, SPRE/QAS
Technology Center 2100
Computer Architecture, Software, and
Information Security

UNITED STATES PATENT AND TRADEMARK OFFICE

UNITED STATES DEPARTMENT OF COMMERCE
United States Patent and Trademark Office
Address: COMMISSIONER FOR PATENTS
P.O. Box 1450
Alexandria, Virginia 22313-1450
www.uspto.gov

APPLICATION NO.	FILING DATE	FIRST NAMED INVENTOR	ATTORNEY DOCKET NO.	CONFIRMATION NO.
10/973,970	10/27/2004	Elliot D. Lewis	14917.0554USU1	2812

27488 7590 02/04/2008
MERCHANT & GOULD (MICROSOFT)
P.O. BOX 2903
MINNEAPOLIS, MN 55402-0903

EXAMINER
LAI, MICHAEL C

ART UNIT	PAPER NUMBER
2157	

MAIL DATE	DELIVERY MODE
02/04/2008	PAPER

Please find below and/or attached an Office communication concerning this application or proceeding.

The time period for reply, if any, is set in the attached communication.

UNITED STATES PATENT AND TRADEMARK OFFICE

COMMISSIONER FOR PATENTS
UNITED STATES PATENT AND TRADEMARK OFFICE
P.O. BOX 1450
ALEXANDRIA, VA 22313-1450
www.uspto.gov

Gregory D. Leibold
Merchant & Gould (Microsoft)
P.O. Box 2903
Minneapolis, MN 55402-0903

MAILED

JAN 3 1 2008

TECHNOLOGY CENTER 2100

In re Application of:
Elliot LEWIS et al.
Appl. No.: 10/973,970
Filed: October 27, 2004
For: SYSTEM AND METHODS FOR PROVIDING NETWORK QUARANTINE

DECISION ON PETITION UNDER 37 CFR § 1.59

This is a decision on the petition under 37 CFR § 1.59(b), filed on 22 January 2008, to expunge information submitted pursuant to MPEP § 724.05.

The petition is **DISMISSED**.

Petitioner requests that the information submitted on 22 January 2008 be expunged from the record if found not to be important to a reasonable examiner in deciding whether to allow the application to issue as a patent. The petition fee set forth in 37 CFR § 1.17(g) has been paid.

The petition is premature because the application has not been allowed or abandoned. Accordingly, it is not appropriate to make a final determination of whether or not the material requested to be expunged is "material," with "materiality" being defined as any information which the examiner considers as being important to a determination of patentability of the claims. Thus, the petition to expunge must be dismissed at this time.

During prosecution on the merits, the examiner will determine whether or not the information submitted on 22 January 2008 is considered to be "material." Once prosecution on the merits is closed, applicant may re-submit a petition to expunge the information. No further fee is required for such a second submission of a petition under 37 CFR § 1.59 to expunge information. If the information is not considered by the examiner to be material, the information will be expunged from the application and may be returned to applicant.

Any inquiry concerning this decision should be directed to the undersigned whose telephone number is (571) 272-3613.

Vincent N. Trans, SPRE/QAS
Technology Center 2100
Computer Architecture, Software, and
Information Security

UNITED STATES PATENT AND TRADEMARK OFFICE

UNITED STATES DEPARTMENT OF COMMERCE
United States Patent and Trademark Office
Address: COMMISSIONER FOR PATENTS
P.O. Box 1450
Alexandria, Virginia 22313-1450
www.uspto.gov

MARTIN & FERRARO, LLP
1557 LAKE O'PINES STREET, NE
HARTVILLE, OH 44632

Mail Date: 04/21/2010

Applicant	: Gary Karlin Michelson	: DECISION ON REQUEST FOR
Patent Number	: 7608107	: RECALCULATION of PATENT
Issue Date	: 10/27/2009	: TERM ADJUSTMENT IN VIEW
Appliction No	: 10/973,974	: OF WYETH AND NOTICE OF INTENT TO
Filed	: 10/26/2004	: ISSUE CERTIFICATE OF CORRECTION
		:

The Request for Recalculation is **GRANTED** to the extent indicated.

The patent term adjustment has been determined to be **639** days. The USPTO will *sua sponte* issue a certificate of correction reflecting the amount of PTA days determined by the recalculation.

Prior to the issuance of the certificate of correction, the USPTO will afford patentee an opportunity to be heard and request reconsideration. Accordingly, patentee has **one month or thirty (30) days**, whichever is longer, to file a request for reconsideration of this patent term adjustment calculation. See 35 U.S.C. 154(b)(3)(B)(ii) and 37 CFR 1.322(a)(4). No extensions of time will be granted under 37 CFR 1.136.

Patentee should use document code PET.OP if electronically filing a request for reconsideration of this patent term adjustment calculation. The patentee must also include the information required by 37 CFR 1.705(b)(2) and the fee required by 37 CFR 1.18(e). If patentee does not file a timely request for reconsideration of this patent term adjustment calculation including the information required by 37 CFR 1.705(b)(2) and the fee required by 37 CFR 1.18(e), the USPTO will issue a certificate of correction reflecting the PTA determination noted above.

Patentee should be aware that in order to preserve the right to review in the United States District Court for the District of Columbia of the USPTO patent term adjustment determination, patentee must ensure that he or she also take the steps required under 35 U.S.C. 154(b)(4)(A) in a timely manner. Nothing in the request for recalculation should be construed as providing an alternative time frame for commencing a civil action under 35 U.S.C. 154(b)(4)(A).

Any questions concerning this decision should be directed to the Office of Patent Legal Administration at 571-272-7702.

UNITED STATES PATENT AND TRADEMARK OFFICE

COMMISSIONER FOR PATENTS
UNITED STATES PATENT AND TRADEMARK OFFICE
P.O. BOX 1450
ALEXANDRIA, VA 22313-1450
www.uspto.gov

McKENNA LONG & ALDRIDGE LLP
1900 K STREET, N.W.
WASHINGTON, DC 20006

COPY MAILED

MAR 30 2006

OFFICE OF PETITIONS

In re Application of:	:	
Kim et al.	:	
Application No. 10/973,984	:	
Filed: October 27, 2004	:	DECISION GRANTING
Title of Invention:	:	STATUS UNDER
METHOD FOR PATTERNING THIN FILM,	:	37 CFR 1.47
METHOD AND APPARATUS FOR	:	
FABRICATING FLAT PANEL DISPLAY	:	

This is in response to a Petition Under 37 CFR 1.47(a), filed July 15, 2005, to allow the other inventor(s) to proceed with the application on behalf of himself or herself and the nonsigning inventor.

The petition is **granted**.

The above-identified application and papers have been reviewed and found in compliance with 37 CFR 1.47(a). This application is hereby accorded Rule 1.47(a) status.

Petitioner has shown that the non-signing inventor, Yong Bum Kim, cannot be found or reached after diligent effort.

As provided in Rule 1.47(a), this Office will forward notice of this application's filing to the non-signing inventor at the addresses given in the Petition. Notice of the filing of this application will also be published in the Official Gazette.

The application file is being referred to the Office of Initial Patent Examination for continued processing.

Telephone inquiries related to this decision may be directed to the undersigned at (571) 272-3232.

Derek L. Woods
Attorney
Office of Petitions

UNITED STATES PATENT AND TRADEMARK OFFICE

COMMISSIONER FOR PATENTS
UNITED STATES PATENT AND TRADEMARK OFFICE
P.O. BOX 1450
ALEXANDRIA, VA 22313-1450
www.uspto.gov

MR. YONG BUM KIM
#27-1311, JANGMI APARTMENT
SINCHEON-DONG, SONGPA-KU, SEOUL, KOREA
REPUBLIC OF KOREA

COPY MAILED

MAR 30 2006

OFFICE OF PETITIONS

In re Application of: :
Kim et al. :
Application No. 10/973,984 :
Filed: October 27, 2004 : LETTER
Title of Invention: :
METHOD FOR PATTERNING THIN FILM, :
METHOD AND APPARATUS FOR :
FABRICATING FLAT PANEL DISPLAY :

Dear Mr. Kim:

You are named as a joint inventor in the above-identified United States patent application filed under the provisions of 35 U.S.C. 116 (United States Code) and 37 CFR 1.47(a), Rules of Practice in Patent Cases. Should a patent be granted on the application you will be designated therein as a joint inventor.

As a named inventor you are entitled to inspect any paper in the file wrapper of the application, order copies of all or any part thereof (at a prepaid cost per 37 CFR 1.19) or make your position of record in the application. Alternatively, you may arrange to do any of the preceding through a registered patent attorney or agent presenting written authorization from you. If you care to join the application, counsel of record (see below) would presumably assist you. Joining in the application would entail the filing of an appropriate oath or declaration by you pursuant to 37 CFR 1.63.

Telephone inquiries regarding this communication should be directed to the undersigned at (571) 272-3232. Requests for information regarding your application should be directed to the File Information Unit at (703) 308-2733. Information regarding how to pay for and order a copy of the application, or a specific paper in the application, should be directed to Certification Division at (703) 308-9726 or 1-800-972-6382 (outside the Washington D.C. area).

Derek L. Woods
Attorney
Office of Petitions

cc: McKENNA LONG & ALDRIDGE LLP
1900 K STREET, N.W.
WASHINGTON, DC 20006

UNITED STATES PATENT AND TRADEMARK OFFICE

Commissioner for Patents
United States Patent and Trademark Office
P.O. Box 1450
Alexandria, VA 22313-1450
www.uspto.gov

APPLICATION NUMBER	FILING/RECEIPT DATE	FIRST NAMED APPLICANT	ATTORNEY DOCKET NUMBER
10/973994	10/26/2004	Hoarty	1436/162

Steven G. Saunders
Bromberg & Sunstein LLP
125 Summer Street
Boston MA 02110-1618

DATE MAILED: November 29, 2004

PETITION DECISION

Dear Applicant:

The petition for PG Pub replacement drawings received by the U. S. Patent and Trademark Office is **granted**. The drawings will be included for patent publication.

Telephone inquiries should be directed to The Office of Pre-Grant Publication at 703 605-4283.

Kaletus King

Signature of Reviewer, Office of Pre-Grant Publication

UNITED STATES PATENT AND TRADEMARK OFFICE

Commissioner for Patents
United States Patent and Trademark Office
P.O. Box 1450
Alexandria, VA 22313-1450
www.uspto.gov

Wilson Sonsini Goodrich & Rosati
650 Page Mill Road
Palo Alto, CA 94304

COPY MAILED

JUN 18 2007

OFFICE OF PETITIONS

In re Application of	:	
Mark A. Reiley et al.	:	
Application No. 10/974,009	:	DECISION ON PETITION
Filed: October 25, 2004	:	TO WITHDRAW
Attorney Docket No. 29914.701.504	:	FROM RECORD
	:	

This is a decision on the Request to Withdraw as attorney or agent of record under 37 C.F.R. § 1.36(b), filed December 8, 2006.

The request is **NOT APPROVED** as moot.

A review of the file record indicates that the power of attorney to Wilson Sonsini Goodrich & Rosati has been revoked by the assignee of the patent application on January 5, 2007. Accordingly, the request to withdraw under 37 C.F.R. § 1.36(b) is moot.

All future communications from the Office will continue to be directed to the below-listed address until otherwise notified by applicant.

Telephone inquires concerning this decision should be directed to Terri Williams at 571-272-2991.

Terri Williams

Terri Williams
Petitions Examiner
Office of Petitions

cc: **Shay Law Group LLP**
2755 Campus Drive
Suite 210
San Mateo, CA 94403

UNITED STATES PATENT AND TRADEMARK OFFICE

Commissioner for Patents
United States Patent and Trademark Office
P.O. Box 1450
Alexandria, VA 22313-1450
www.uspto.gov

ERIC P. MIRABEZ
BIOARRY SOLUTIONS LLC
35 TECHNOLOGY DRIVE
WARREN NJ 07059

COPY MAILED

JAN 19 2007

OFFICE OF PETITIONS

In re Application of	:
Seul et al.	:
Application No. 10/974,036	: DECISION GRANTING PETITION
Filed: October 26, 2004	: UNDER 37 CFR 1.78(a)(6)
Attorney Docket No. MEXPR-US	:

This is a decision on the petition under 37 CFR 1.78(a)(6), filed November 28, 2006, to accept an unintentionally delayed claim under 35 U.S.C. § 119(e) for the benefit of prior-filed provisional Application No. 60/516,611, filed October 28, 2003, as set forth in the concurrently filed amendment.

The petition is **GRANTED**.

A petition under 37 CFR 1.78(a)(6) is only applicable to those applications filed on or after November 29, 2000. Further, the petition is appropriate only after expiration of the period specified in 37 CFR 1.78(a)(5)(ii) and must be filed during the pendency of the nonprovisional application. In addition, the petition must be accompanied by:

(1) the reference required by 35 U.S.C. § 119(e) and 37 CFR 1.78(a)(5)(i) to the prior-filed application, unless previously submitted;
(2) the surcharge set forth in § 1.17(t); and
(3) a statement that the entire delay between the date the claim was due under 37 CFR 1.78(a)(5)(ii) and the date the claim was filed was unintentional. The Commissioner may require additional information where there is a question whether the delay was unintentional.

The instant nonprovisional application was filed after November 29, 2000, and the claim herein for the benefit of priority to the prior-filed provisional application is submitted after expiration of the period specified by 37 CFR 1.78(a)(5)(ii). Therefore, this is a proper petition under 37 CFR 1.78(a)(6).

The instant nonprovisional application was pending at the time of filing of the reference to the prior-filed provisional application as required by 37 1.78(a)(5)(iii). Additionally, the instant nonprovisional application was filed within twelve months of the filing date of the prior-filed provisional application, Application No. 60/516,611, which was filed on October 28, 2003, for which priority is claimed.

The petition complies with the requirements for a grantable petition under 37 CFR 1.78(a)(6) in that (1) a reference to the above-noted, prior-filed provisional application has been included in an

amendment to the first sentence of the specification following the title, as provided by 37 CFR 1.78(a)(5)(iii); (2) the surcharge fee required by 37 CFR 1.17(t) has been submitted; and (3) the petition contains a proper statement of unintentional delay. Accordingly, having found that the instant petition for acceptance of an unintentionally delayed claim for the benefit of priority under 35 U.S.C. § 119(e) to the above-noted, prior-filed provisional application satisfies the conditions of 37 CFR 1.78(a)(6), the petition is granted.

The granting of the petition to accept the delayed benefit claim to the prior-filed application under 37 CFR 1.78(a)(6) should not be construed as meaning that the instant application is entitled to the benefit of the filing date of the prior-filed application. In order for the instant application to be entitled to the benefit of the prior-filed application, all other requirements under 35 U.S.C. §119(e) and 37 CFR 1.78(a)(4) and (a)(5) must be met. Similarly, the fact that the corrected Filing Receipt accompanying this decision on petition includes the prior-filed application should not be construed as meaning that applicant is entitled to the claim for benefit of priority to the prior-filed application noted thereon. Accordingly, the examiner will, in due course, consider this benefit claim and determine whether the instant application is entitled to the benefit of the earlier filing date.

A corrected Filing Receipt, which includes the priority claim to the prior-filed provisional application, accompanies this decision on petition.

Any inquiries concerning this decision may be directed to the undersigned at (571) 272-3206. Any other inquiries concerning either the examination procedures or status of the application should be directed to the Technology Center.

This matter is being referred to Technology Center AU 1634 for appropriate action on the amendment submitted November 28, 2006, including consideration by the examiner of the claim under 35 U.S.C. §119(e) for the benefit of priority to prior-filed provisional Application No. 60/516,611.

Liana Walsh
Petitions Examiner
Office of Petitions

ATTACHMENT: Corrected Filing Receipt

UNITED STATES PATENT AND TRADEMARK OFFICE

UNITED STATES DEPARTMENT OF COMMERCE
United States Patent and Trademark Office
Address: COMMISSIONER FOR PATENTS
P.O. Box 1450
Alexandria, Virginia 22313-1450
www.uspto.gov

APPL NO.	FILING OR 371 (c) DATE	ART UNIT	FIL FEE REC'D	ATTY.DOCKET NO	DRAWINGS	TOT. CLMS	IND CLMS
10/974,036	10/26/2004	1634	1567	MEXPR-US	31	62	16

CONFIRMATION NO. 3526
CORRECTED FILING RECEIPT
OC000000022047927
OC000000022047927

36038
ERIC P. MIRABEZ
BIOARRY SOLUTIONS LLC
35 TECHNOLOGY DRIVE
WARREN, NJ 07059

Date Mailed: 01/18/2007

Receipt is acknowledged of this regular Patent Application. It will be considered in its order and you will be notified as to the results of the examination. Be sure to provide the U.S. APPLICATION NUMBER, FILING DATE, NAME OF APPLICANT, and TITLE OF INVENTION when inquiring about this application. Fees transmitted by check or draft are subject to collection. Please verify the accuracy of the data presented on this receipt. **If an error is noted on this Filing Receipt, please mail to the Commissioner for Patents P.O. Box 1450 Alexandria Va 22313-1450. Please provide a copy of this Filing Receipt with the changes noted thereon. If you received a "Notice to File Missing Parts" for this application, please submit any corrections to this Filing Receipt with your reply to the Notice. When the USPTO processes the reply to the Notice, the USPTO will generate another Filing Receipt incorporating the requested corrections (if appropriate).**

Applicant(s)

Michael Seul, Fanwood, NJ;
Sukanta Banerjee, Pennington, NJ;
Jiacheng Yang, Hillsboro, NJ;
Tatiana Vener, Stirling, NJ;

Power of Attorney:

Eric Mirabel--31211

Domestic Priority data as claimed by applicant

This appln claims benefit of 60/516,611 10/28/2003
and claims benefit of 60/544,533 02/14/2004

Foreign Applications

If Required, Foreign Filing License Granted: 01/18/2007

The country code and number of your priority application, to be used for filing abroad under the Paris Convention, is US10/974,036

Projected Publication Date: Not Applicable

Non-Publication Request: No

Early Publication Request: No

**** SMALL ENTITY ****

Title

Optimization of gene expression analysis using immobilized capture probes

Preliminary Class

435

PROTECTING YOUR INVENTION OUTSIDE THE UNITED STATES

Since the rights granted by a U.S. patent extend only throughout the territory of the United States and have no effect in a foreign country, an inventor who wishes patent protection in another country must apply for a patent in a specific country or in regional patent offices. Applicants may wish to consider the filing of an international application under the Patent Cooperation Treaty (PCT). An international (PCT) application generally has the same effect as a regular national patent application in each PCT-member country. The PCT process **simplifies** the filing of patent applications on the same invention in member countries, but **does not result** in a grant of "an international patent" and does not eliminate the need of applicants to file additional documents and fees in countries where patent protection is desired.

Almost every country has its own patent law, and a person desiring a patent in a particular country must make an application for patent in that country in accordance with its particular laws. Since the laws of many countries differ in various respects from the patent law of the United States, applicants are advised to seek guidance from specific foreign countries to ensure that patent rights are not lost prematurely.

Applicants also are advised that in the case of inventions made in the United States, the Director of the USPTO must issue a license before applicants can apply for a patent in a foreign country. The filing of a U.S. patent application serves as a request for a foreign filing license. The application's filing receipt contains further information and guidance as to the status of applicant's license for foreign filing.

Applicants may wish to consult the USPTO booklet, "General Information Concerning Patents" (specifically, the section entitled "Treaties and Foreign Patents") for more information on timeframes and deadlines for filing foreign patent applications. The guide is available either by contacting the USPTO Contact Center at 800-786-9199, or it can be viewed on the USPTO website at http://www.uspto.gov/web/offices/pac/doc/general/index.html.

For information on preventing theft of your intellectual property (patents, trademarks and copyrights), you may wish to consult the U.S. Government website, http://www.stopfakes.gov. Part of a Department of Commerce initiative, this website includes self-help "toolkits" giving innovators guidance on how to protect intellectual property in specific countries such as China, Korea and Mexico. For questions regarding patent enforcement issues, applicants may call the U.S. Government hotline at 1-866-999-HALT (1-866-999-4158).

LICENSE FOR FOREIGN FILING UNDER
Title 35, United States Code, Section 184
Title 37, Code of Federal Regulations, 5.11 & 5.15

GRANTED

The applicant has been granted a license under 35 U.S.C. 184, if the phrase "IF REQUIRED, FOREIGN FILING LICENSE GRANTED" followed by a date appears on this form. Such licenses are issued in all applications where the conditions for issuance of a license have been met, regardless of whether or not a license may be required as set forth in 37 CFR 5.15. The scope and limitations of this license are set forth in 37 CFR 5.15(a) unless an earlier license has been issued under 37 CFR 5.15(b). The license is subject to revocation upon written notification. The

date indicated is the effective date of the license, unless an earlier license of similar scope has been granted under 37 CFR 5.13 or 5.14.

This license is to be retained by the licensee and may be used at any time on or after the effective date thereof unless it is revoked. This license is automatically transferred to any related applications(s) filed under 37 CFR 1.53(d). This license is not retroactive.

The grant of a license does not in any way lessen the responsibility of a licensee for the security of the subject matter as imposed by any Government contract or the provisions of existing laws relating to espionage and the national security or the export of technical data. Licensees should apprise themselves of current regulations especially with respect to certain countries, of other agencies, particularly the Office of Defense Trade Controls, Department of State (with respect to Arms, Munitions and Implements of War (22 CFR 121-128)); the Bureau of Industry and Security, Department of Commerce (15 CFR parts 730-774); the Office of Foreign Assets Control, Department of Treasury (31 CFR Parts 500+) and the Department of Energy.

NOT GRANTED

No license under 35 U.S.C. 184 has been granted at this time, if the phrase "IF REQUIRED, FOREIGN FILING LICENSE GRANTED" DOES NOT appear on this form. Applicant may still petition for a license under 37 CFR 5.12, if a license is desired before the expiration of 6 months from the filing date of the application. If 6 months has lapsed from the filing date of this application and the licensee has not received any indication of a secrecy order under 35 U.S.C. 181, the licensee may foreign file the application pursuant to 37 CFR 5.15(b).

UNITED STATES PATENT AND TRADEMARK OFFICE

Commissioner for Patents
United States Patent and Trademark Office
P.O. Box 1450
Alexandria, VA 22313-1450
www.uspto.gov

Levenfeld Pearlstein, LLC (ILLINOIS TOOL WORKS)
2 North LaSalle Street
Suite 1300
Chicago IL 60602

COPY MAILED

OCT 0 8 2008

OFFICE OF PETITIONS

DECISION ON PETITION

In re Patent No. 7,410,141 :
Issue Date: August 12, 2008 :
Application No. 10/974,043 :
Filed: October 25, 2004 :
Attorney Docket No. 20711-1 (35371-69131) :
(20711-A (35371-69129CIP1)) :

This is a decision on the petition under 37 CFR 3.81, filed September 9, 2008, to delete the indicated assignee's name on the Title Page on the above-identified patent by way of a Certificate of Correction.

The petition is **GRANTED**.

Petitioner states that incorrect assignee information was inadvertent entered on the form PTOL-85(b) that was submitted with payment of the Issue Fee on July 1, 2008. Accordingly, petitioner requests that a Certificate of Correction be issued to delete the erroneously identified assignee name on the Title Page of the Letters Patent.

37 CFR 3.81(b), effective June 25, 2004, reads:

> *After payment of the issue fee:* Any request for issuance of an application in the name of the assignee submitted after the date of payment of the issue fee, and any request for a patent to be corrected to state the name of the assignee, must state that the assignment was submitted for recordation as set forth in § 3.11 before issuance of the patent, and must include a request for a certificate of correction under § 1.323 of this chapter (accompanied by the fee set forth in § 1.20(a) and the processing fee set forth in § 1.17(i) of this chapter.

The Petition was accompanied by a Certificate of Correction and deposit account authorization to charge the fees required by 37 CFR 3.81(b). As such, the requisite $100.00 fee (Fee Code 1811), as set forth under in 37 CFR 1.20(a), and the requisite $130.00 processing fee (Fee Code 1464), as set forth under 37 CFR 1.17(i), have been charged to Deposit Account No. 50-2035, as authorized in the Petition. Further, Office assignment records reflect that there is no assignee of record. Accordingly, as the Petition complies with the provisions of 37 CFR 3.81(b), it is appropriate for the Office to issue a Certificate of Correction in accordance with the content of the PTO/SB/44 that accompanied the present Petition.

Inquiries related to this communication should be directed to Brian W. Brown at (571) 272-5338.

Any questions concerning the issuance of a Certificate of Correction should be directed to the Certificates of Correction Branch at (571) 272-4200.

The matter is being referred to the Certificate of Corrections Branch for processing of a Certificate of Correction in US Patent 7,410,141 B2.

Brian W. Brown
Petitions Examiner
Office of Petitions

UNITED STATES PATENT AND TRADEMARK OFFICE

COMMISSIONER FOR PATENTS
UNITED STATES PATENT AND TRADEMARK OFFICE
P.O. BOX 1450
ALEXANDRIA, VA 22313-1450
www.uspto.gov

LOUIS J. WILLE
BRISTOL-MYERS SQUIBB COMPANY
PATENT DEPARTMENT
P O BOX 4000
PRINCETON, NJ 08543-4000

COPY MAILED
JAN 24 2006
OFFICE OF PETITIONS

In re Application of	:	
Mark E. Salvatiet, et al.	:	
Application No. 10/974,049	:	ON PETITION
Filed: October 25, 2004	:	
Attorney Docket No.: LD0192B CNT	:	
	:	

This is a decision on the petition, filed January 23, 2006, under 37 CFR 1.313(c)(2) to withdraw the above-identified application from issue after payment of the issue fee.

The petition is **GRANTED**.

The above-identified application is withdrawn from issue for consideration of a submission under 37 CFR 1.114 (request for continued examination). See 37 CFR 1.313(c)(2).

Petitioner is advised that the issue fee paid on July 7, 2005, in the above-identified application cannot be refunded. If, however, the above-identified application is again allowed; petitioner may request that it be applied towards the issue fee required by the new Notice of Allowance. [1]

Telephone inquiries relating to this decision should be directed to the undersigned at (571) 272-3204.

The application is being referred to Technology Center AU 1626 for further processing of the request for continued examination under 37 CFR 1.114.

Sherry D. Brinkley
Petitions Examiner
Office of Petitions

[1]The request to apply the issue fee to the new Notice may be satisfied by completing and returning the new Issue Fee Transmittal Form PTOL-85(b), which includes the following language thereon: " Commissioner for Patents is requested to apply the Issue Fee and Publication Fee (if any) or re-apply any previously paid issue fee to the application identified above." Petitioner is advised that, whether a fee is indicated as being due or not, the Issue Fee Transmittal Form **must** be completed and timely submitted to avoid abandonment. Note the language in bold text on the first page of the Notice of Allowance and Fee(s) Due (PTOL-85).

SPE RESPONSE FOR CERTIFICATE OF CORRECTION

Paper No.: X

DATE : **March 31, 2008**

TO SPE OF : ART UNIT **1626**

SUBJECT : Request for Certificate of Correction for Appl. No.: **10/974049** Patent No.: **7141578 B2**

A response is requested with respect to a request for a certificate of correction.

With respect to the change(s) requested to correct Office and/or Applicant's errors, should the patent read as shown in the certificate of correction attached herewith or the COCIN document(s), in IFW images for the above-identified patented application? No new matter should be introduced, nor should the scope or meaning of the claims be changed.

If the response is for an IFW, within **7** days, please complete and forward the response, to the employee (named below) via scanning into application images, using document code **COCX**.

DO NOT SENT TO ATTORNEY

If the response is for a paper file wrapper, please complete the response and forward the response with the paper file wrapper, to the employee (named below), within **7** days, to:

Certificates of Correction Branch (CofC)
South Tower - 9A22
Palm Location 7580

You can fax the Directors/SPE response to 571-270-9990

LAMONTE NEWSOME
Certificates of Correction Branch
703-308-9390 ext. 112

Thank You For Your Assistance

The request for issuing the above-identified correction(s) is hereby:
Note your decision on the appropriate box.

- ☒ **Approved** — **All** changes apply.
- ☐ **Approved in Part** — Specify below which changes **do not** apply.
- ☐ **Denied** — State the reasons for denial below.

Comments: _____

Joseph K. McKane
JOSEPH K. McKANE
SUPERVISORY PATENT EXAMINER
TECHNOLOGY CENTER 1600

SPE

1626
Art Unit

UNITED STATES PATENT AND TRADEMARK OFFICE

Commissioner for Patents
United States Patent and Trademark Office
P.O. Box 1450
Alexandria, VA 22313-1450
www.uspto.gov

COPY MAILED

SEP 12 2007

OFFICE OF PETITIONS

HEWLETT-PACKARD DEVELOPMENT COMPANY
INTELLECTUAL PROPERTY ADMINISTRATION
PO BOX 272400
FORT COLLINS CO 80527-2400

In re Application of	:	
Rodenas, et al.	:	
Application No. 10/974,066	:	ON PETITION
Filed: October 27, 2004	:	
Attorney Docket No. 200402847-1	:	

This is a decision on the petition under 37 CFR 1.137(b), filed August 20, 2007, to revive the above-identified application.

The petition under 37 CFR 1.137(b) is **GRANTED**.

The above-identified application became abandoned for failure to timely file a response to the non-final Office action mailed January 8, 2007. This Office action set a statutory period for reply of three months. No extensions of time were obtained. Accordingly, no reply having been received, the application became abandoned on April 9, 2007. A Notice of Abandonment was mailed on July 23, 2007.

With the instant petition, applicant paid the petition fee, made the proper statement of unintentional delay, and submitted the required reply in the form of an Amendment.

The $1500 petition fee has been charged to Deposit Account No. 08-2025, as authorized.

The matter is being forwarded to Group Art Unit 2853 for consideration of the Amendment filed August 20, 2007.

Telephone inquiries concerning this decision should be directed to the undersigned at (571)272-3207.

Cliff Congo
Petitions Attorney
Office of Petitions

UNITED STATES PATENT AND TRADEMARK OFFICE

Commissioner for Patents
United States Patent and Trademark Office
P.O. Box 1450
Alexandria, VA 22313-1450
www.uspto.gov

BRINKS HOFER GILSON & LIONE
P.O. BOX 10395
CHICAGO, IL 60610

COPY MAILED

MAY 1 3 2005

OFFICE OF PETITIONS

In re Application of	:	
Bartels, et al.	:	
Application No. 10/974,069	:	DECISION GRANTING PETITION
Filed: October 27, 2004	:	
Attorney Docket No. 11371-43	:	

This is a decision on the petition filed April 7, 2005, to vacate the language in the "Notice to File Missing Parts of Nonprovisional Application" (the "Notice") relative to the alleged omitted Figure 3.

The petition is **granted**.

On October 27, 2004, the above-identified application was filed. However, on February 2, 2005, the Office of Initial Patent Examination mailed the Notice stating that application had been accorded a filing date of October 27, 2004, and advising applicant that Figure 3 as described in the specification appeared to have been omitted. Relative to the alleged omitted item, the notice set a non-extendable period for reply two-month period for reply.

In response, on April 7, 2005, applicant filed the present petition, a copy of Figure 3 as described in the specification, and an Office date-stamped postcard receipt acknowledging receipt of 2 sheets of the drawings, among other items.

Upon review of the record, Figure 3 was not located among the application papers. However, the evidence is convincing that the application papers deposited October 27, 2004, included Figure 3, which was subsequently misplaced by the Office. Therefore, the application, including Figure 3, was complete on filing and entitled to the presently accorded filing date of October 27, 2004, with Figure 3 as part of the original disclosure.

Accordingly, the petition is granted; the language of the Notice relative to the omitted items is vacated, accordingly. The petition fee of $400.00 will be refunded, in due course.

The application file is being returned to the Office of Initial Patent Examination for further processing with the presently accorded filing date of October 27, 2004, using the 2 sheets of drawings filed on that date.

The declaration filed April 7, 2005, is noted and made of record.

Any inquiries related to this decision should be directed to the undersigned at (571) 272-3222.

Kenya A. McLaughlin
Petitions Attorney
Office of Petitions

UNITED STATES PATENT AND TRADEMARK OFFICE

Commissioner for Patents
United States Patent and Trademark Office
P.O. Box 1450
Alexandria, VA 22313-1450
www.uspto.gov

JOHN M. GUYNN
WORKMAN NYDEGGER
1000 EAGLE GATE TOWER/60 EAST SOUTH TEMPLE
SALT LAKE CITY, UT 84111

COPY MAILED

JUN 16 2008

In re Application of	:	
MAGANAS, Thomas C.	:	
Application No. 10/974,094	:	DECISION ON PETITION
Filed: October 27, 2004	:	TO MAKE SPECIAL UNDER
Attorney Docket No. **13215.12**	:	37 CFR 1.102(c)(1)
	:	

This is a decision on the petition under 37 CFR 1.102(c)(1), filed May 22, 2008, to make the above-identified application special based on applicant's age as set forth in M.P.E.P. § 708.02, Section IV.

The petition is **GRANTED.**

A grantable petition to make an application special under 37 CFR 1.102(c)(1) and MPEP § 708.02, Section IV: Applicant's Age must be accompanied by evidence showing that at least one of the applicants is 65 years of age, or more, such as a birth certificate or a statement by applicant. No fee is required

The instant petition includes the declaration of inventor Thomas C. Maganas, attesting to his age. Accordingly, the above-identified application has been accorded "special" status.

Inquiries concerning either the examination or status of the application should be directed to the Technology Center at (571) 272-3700.

Telephone inquiries concerning this decision should be directed to the undersigned at 571-272-7253.

The application is being forwarded to the Technology Center AU 3748 for action on the merits commensurate with this decision.

Monica A. Graves
Petitions Examiner
Office of Petitions

UNITED STATES PATENT AND TRADEMARK OFFICE

UNITED STATES DEPARTMENT OF COMMERCE
United States Patent and Trademark Office
Address: COMMISSIONER FOR PATENTS
P.O. Box 1450
Alexandria, Virginia 22313-1450
www.uspto.gov

APPL NO.	FILING OR 371 (c) DATE	ART UNIT	FIL FEE REC'D	ATTY.DOCKET NO	DRAWINGS	TOT CLMS	IND CLMS
10/974,104	10/26/2004	2825	914	SYN-0600	13	22	4

CONFIRMATION NO. 3720

CORRECTED FILING RECEIPT

OC000000015970067

35273
BEVER, HOFFMAN & HARMS, LLP
1432 CONCANNON BLVD
BLDG G
LIVERMORE, CA 94550-6006

Date Mailed: 05/09/2005

Receipt is acknowledged of this regular Patent Application. It will be considered in its order and you will be notified as to the results of the examination. Be sure to provide the U.S. APPLICATION NUMBER, FILING DATE, NAME OF APPLICANT, and TITLE OF INVENTION when inquiring about this application. Fees transmitted by check or draft are subject to collection. Please verify the accuracy of the data presented on this receipt. **If an error is noted on this Filing Receipt, please mail to the Commissioner for Patents P.O. Box 1450 Alexandria Va 22313-1450. Please provide a copy of this Filing Receipt with the changes noted thereon. If you received a "Notice to File Missing Parts" for this application, please submit any corrections to this Filing Receipt with your reply to the Notice. When the USPTO processes the reply to the Notice, the USPTO will generate another Filing Receipt incorporating the requested corrections (if appropriate).**

Applicant(s)

Jun Zhu, Sunnyvale, CA;
Yulan Wang, Fremont, CA;
Charles Samuel McFalls JR., Graham, NC;

Assignment For Published Patent Application

Synopsys, Inc., Mountain View, CA

Power of Attorney: The patent practitioners associated with Customer Number **35273**.

Domestic Priority data as claimed by applicant

Foreign Applications

If Required, Foreign Filing License Granted: 01/18/2005

The country code and number of your priority application, to be used for filing abroad under the Paris Convention, is US10/974,104

Projected Publication Date: 04/27/2006

Non-Publication Request: No

Early Publication Request: No

BEST AVAILABLE COPY

Title

Wide geometry recognition by using circle-tangent variable spacing model

Preliminary Class

716

LICENSE FOR FOREIGN FILING UNDER
Title 35, United States Code, Section 184
Title 37, Code of Federal Regulations, 5.11 & 5.15

GRANTED

The applicant has been granted a license under 35 U.S.C. 184, if the phrase "IF REQUIRED, FOREIGN FILING LICENSE GRANTED" followed by a date appears on this form. Such licenses are issued in all applications where the conditions for issuance of a license have been met, regardless of whether or not a license may be required as set forth in 37 CFR 5.15. The scope and limitations of this license are set forth in 37 CFR 5.15(a) unless an earlier license has been issued under 37 CFR 5.15(b). The license is subject to revocation upon written notification. The date indicated is the effective date of the license, unless an earlier license of similar scope has been granted under 37 CFR 5.13 or 5.14.

This license is to be retained by the licensee and may be used at any time on or after the effective date thereof unless it is revoked. This license is automatically transferred to any related applications(s) filed under 37 CFR 1.53(d). This license is not retroactive.

The grant of a license does not in any way lessen the responsibility of a licensee for the security of the subject matter as imposed by any Government contract or the provisions of existing laws relating to espionage and the national security or the export of technical data. Licensees should apprise themselves of current regulations especially with respect to certain countries, of other agencies, particularly the Office of Defense Trade Controls, Department of State (with respect to Arms, Munitions and Implements of War (22 CFR 121-128)); the Office of Export Administration, Department of Commerce (15 CFR 370.10 (j)); the Office of Foreign Assets Control, Department of Treasury (31 CFR Parts 500+) and the Department of Energy.

NOT GRANTED

No license under 35 U.S.C. 184 has been granted at this time, if the phrase "IF REQUIRED, FOREIGN FILING LICENSE GRANTED" DOES NOT appear on this form. Applicant may still petition for a license under 37 CFR 5.12, if a license is desired before the expiration of 6 months from the filing date of the application. If 6 months has lapsed from the filing date of this application and the licensee has not received any indication of a secrecy order under 35 U.S.C. 181, the licensee may foreign file the application pursuant to 37 CFR 5.15(b).

MENU

Freeform Search

Database:
US Pre-Grant Publication Full-Text Da
US Patents Full-Text Database
US Patents OCR Backfile
EPO Abstracts Database
JPO Abstracts Database
Derwent World Patents Index

Term: cross$ and l1

Display: 30 **Documents in Display Format:** - **Starting with Number** 1

Generate: ○ **Hit List** ◉ **Hit Count** ○ **Side by Side** ○ **Image**

Search | Clear | Interrupt

Search History

DATE: Saturday, October 25, 2008 Purge Queries Printable Copy Create Case

Set Name side by side	Query	Hit Count	Set Name result set
DB=PGPB,USPT,EPAB,JPAB,DWPI,TDBD; PLUR=YES; OP=ADJ			
L3	L1 and crosslinked	0	L3
L2	L1 and crosslink	0	L2
L1	10/974118	1	L1

END OF SEARCH HISTORY

UNITED STATES PATENT AND TRADEMARK OFFICE

Commissioner for Patents
United States Patent and Trademark Office
P.O. Box 1450
Alexandria, VA 22313-1450
www.uspto.gov

Roger D. Emerson, Esq.
Brouse McDowell, LPA
388 S. Main Street, Suite 500
Akron, Ohio 44311-4407

COPY MAILED

APR 17 2006

OFFICE OF PETITIONS

In re Application of	:	
Larry Laurenzi, et al.	:	
Application No. 10/974,156	:	DECISION ON PETITION
Filed: October 27, 2004	:	TO WITHDRAW
Attorney Docket No. N/A	:	FROM RECORD
	:	

This is a decision on the Request to Withdraw as attorney or agent of record under 37 C.F.R. § 1.36(b), filed May 9, 2005.

The request is **APPROVED**.

A grantable request to withdraw as attorney/agent of record must be signed by every attorney/agent seeking to withdraw or contain a clear indication that one attorney is signing on behalf of another/others. A request to withdraw will not be approved unless at least 30 (thirty) days would remain between the date of approval and the later of the expiration date of a time to file a response or the expiration date of the maximum time period which can be extended under 37 C.F.R. § 1.136(a).

The request was signed by Roger D. Emerson, Esq. on behalf of himself.

Roger D. Emerson has been withdrawn. However, Tim Bennett will remain of record.

The correspondence address of record has been changed to the Paragon Data Systems, Inc. address listed below.

The Revocation Powers of Attorney by Applicant(s) filed July 20, 2005 has not been accepted. A 37 CFR §3.73(b) has not been include din order for the assignee to establish ownership of the patent property to the satisfaction of the Director.

There is a notice mailed December 7, 2005 that requires a response from the applicant.

Telephone inquiries concerning this decision should be directed to Cheryl Gibson-Baylor at (571)272-3213.

Denise Pothier
Petitions Examiner
Office of Petitions

cc: Larry Laurenzi
Paragon Data Systems, Inc.
2218 Superior Avenue
Cleveland, OH 44114

cc: Renner, Otto, Boisselle & Sklar, LLP
1621 Euclid Avenue, 19th Floor
Cleveland, Ohio 44115

UNITED STATES PATENT AND TRADEMARK OFFICE

Commissioner for Patents
United States Patent and Trademark Office
P.O. Box 1450
Alexandria, VA 22313-1450
www.uspto.gov

COPY MAILED

FEB 01 2007

OFFICE OF PETITIONS

LARRY LAURENZI
PARAGAON DATA SYSTEMS, INC.
2218 SUPERIOR AVENUE
CLEVELAND, OH 44114

In re Application of	:	
Larry Laurenzi et al	:	
Application No. 10/974,156	:	ON PETITION
Filed: October 27, 2004	:	
Attorney Docket No.	:	

This is a decision on the petition under 37 CFR 1.137(b), filed August 24, 2006, to revive the above-identified application.

The petition is **GRANTED**.

The above-identified application became abandoned for failure to reply in a timely manner to the non-final Office action mailed August 18, 2005, which set a shortened statutory period for reply of three (3) months. No extensions of time under the provisions of 37 CFR 1.136(a) were obtained. Accordingly, the above-identified application became abandoned on November 19, 2005.

The Power of Attorney received August 24, 2006 is not accepted. In order for an assignee to take action in a case before the Office, compliance with 37 CFR 3.73(b) must be satisfied. More specifically, 37 CFR 3.73(b) provides that: (1) when an assignee seeks to take action in a matter before the Office, the assignee must establish its ownership of the property to the satisfaction of the Commissioner; (2) ownership is established by submitting to the Office, in the Office file related to the matter in which action is sought to be taken, documentary evidence of a chain of title from the original owner to the assignee (*e.g.*, copy of an executed assignment submitted for recording) or by specifying (*e.g.*, reel and frame number) where such evidence is recorded in the Office; (3) the submission establishing ownership must be signed by a party authorized to act on behalf of the assignee; and (4) documents submitted to establish ownership may be required to be recorded as a condition to permitting the assignee to take action in a matter pending before the Office. A blank 37 CFR 3.73(b) accompanies this decision.

Telephone inquiries concerning this decision should be directed to Irvin Dingle at (571) 272-3210.

This matter is being forwarded to Technology Center AU 1734 for further processing.

Irvin Dingle
Petitions Examiner
Office of Petitions

cc:

Cynthia S. Murphy, Esq.
Renner Otto, Boisselle & Sklar, LLP
1621 Euclid Avenue, 19th Floor
Cleveland, OH 44115

Attachment: blank 37 CFR 3.73(b)

PTO/SB/96 (09-06)
Approved for use through 03/31/2007. OMB 0651-0031
U.S. Patent and Trademark Office; U.S. DEPARTMENT OF COMMERCE
Under the Paperwork Reduction Act of 1995, no persons are required to respond to a collection of information unless it displays a valid OMB control number.

STATEMENT UNDER 37 CFR 3.73(b)

Applicant/Patent Owner: _____

Application No./Patent No.: _____ Filed/Issue Date: _____

Entitled:

_____, a _____
(Name of Assignee) (Type of Assignee, e.g., corporation, partnership, university, government agency, etc.)

states that it is:

1. ☐ the assignee of the entire right, title, and interest; or

2. ☐ an assignee of less than the entire right, title and interest
(The extent (by percentage) of its ownership interest is_____ %)

in the patent application/patent identified above by virtue of either:

A. ☐ An assignment from the inventor(s) of the patent application/patent identified above. The assignment was recorded in the United States Patent and Trademark Office at Reel _____, Frame _____, or for which a copy thereof is attached.

OR

B. ☐ A chain of title from the inventor(s), of the patent application/patent identified above, to the current assignee as follows:

1. From: _____ To: _____
The document was recorded in the United States Patent and Trademark Office at
Reel _____, Frame _____, or for which a copy thereof is attached.

2. From: _____ To: _____
The document was recorded in the United States Patent and Trademark Office at
Reel _____, Frame _____, or for which a copy thereof is attached.

3. From: _____ To: _____
The document was recorded in the United States Patent and Trademark Office at
Reel _____, Frame _____, or for which a copy thereof is attached.

☐ Additional documents in the chain of title are listed on a supplemental sheet.

☐ As required by 37 CFR 3.73(b)(1)(i), the documentary evidence of the chain of title from the original owner to the assignee was, or concurrently is being, submitted for recordation pursuant to 37 CFR 3.11.

[NOTE: A separate copy (*i.e.*, a true copy of the original assignment document(s)) must be submitted to Assignment Division in accordance with 37 CFR Part 3, to record the assignment in the records of the USPTO. See MPEP 302.08]

The undersigned (whose title is supplied below) is authorized to act on behalf of the assignee.

Signature	Date
Printed or Typed Name	Telephone Number
Title	

This collection of information is required by 37 CFR 3.73(b). The information is required to obtain or retain a benefit by the public which is to file (and by the USPTO to process) an application. Confidentiality is governed by 35 U.S.C. 122 and 37 CFR 1.11 and 1.14. This collection is estimated to take 12 minutes to complete, including gathering, preparing, and submitting the completed application form to the USPTO. Time will vary depending upon the individual case. Any comments on the amount of time you require to complete this form and/or suggestions for reducing this burden, should be sent to the Chief Information Officer, U.S. Patent and Trademark Office, U.S. Department of Commerce, P.O. Box 1450, Alexandria, VA 22313-1450. DO NOT SEND FEES OR COMPLETED FORMS TO THIS ADDRESS. **SEND TO: Commissioner for Patents, P.O. Box 1450, Alexandria, VA 22313-1450.**

If you need assistance in completing the form, call 1-800-PTO-9199 and select option 2.

UNITED STATES PATENT AND TRADEMARK OFFICE

Commissioner for Patents
United States Patent and Trademark Office
P.O. Box 1450
Alexandria, VA 22313-1450
www.uspto.gov

PERKINS COIE, LLP
P. O. BOX 1247
PATENT - SEA
SEATTLE, WA 98111-1247

COPY MAILED

SEP 17 2007

OFFICE OF PETITIONS

In re Application of
Thomas A. Campbell et al
Application No. 10/974,167
Filed: October 26, 2004
Attorney Docket No. 03004-8168-US00

: DECISION GRANTING PETITION
: UNDER 37 CFR 1.313(c)(2)

This is a decision on the petition, filed September 17, 2007, under 37 CFR 1.313(c)(2) to withdraw the above-identified application from issue after payment of the issue fee.

The petition is **GRANTED**.

The above-identified application is withdrawn from issue for consideration of a submission under 37 CFR 1.114 (request for continued examination). See 37 CFR 1.313(c)(2).

Petitioner is advised that the issue fee paid on July 12, 2007 in the above-identified application cannot be refunded. If, however, the above-identified application is again allowed, petitioner may request that it be applied towards the issue fee required by the new Notice of Allowance.[1]

Telephone inquiries should be directed to the undersigned at (571) 272-3218.

This matter is being referred to Technology Center AU 3643 for processing of the request for continued examination under 37 CFR 1.114 and for consideration of the Information Disclosure Statement.

Frances Hicks
Petitions Examiner
Office of Petitions

C:\Documents and Settings\fhicks\My Documents\470\Sept10\974167.wpd

---

[1] *The request to apply the issue fee to the new Notice may be satisfied by completing and returning the new Part B – Fee(s) Transmittal Form (along with any balance due at the time of submission). Petitioner is advised that the Issue Fee Transmittal Form **must** be completed and timely submitted to avoid abandonment.*

UNITED STATES PATENT AND TRADEMARK OFFICE

Commissioner for Patents
United States Patent and Trademark Office
P.O. Box 1450
Alexandria, VA 22313-1450
www.uspto.gov

UNISYS CORPORATION
UNISYS WAY
MAIL STATION: E8-114
BLUE BELL PA 19424

MAILED

APR 12 2010

OFFICE OF PETITIONS

In re Application of	:	
Phillip M. Hoffman et al	:	
Application No. 10/974,194	:	DECISION ON PETITION
Filed: October 27, 2004	:	
Attorney Docket No. TN348	:	

This is a decision on the petition under the unintentional provisions of 37 CFR 1.137(b), filed December 27, 2009, to revive the above-identified application.

The petition is **GRANTED**.

The petition satisfies the conditions for revival pursuant to the provisions of 37 CFR 1.137(b) in that (1) the reply in the form of the issue fee; (2) the petition fee; and (3) the required statement of unintentional delay have been received. Accordingly, the reply to the Notice of Allowance mailed September 3, 2009, is accepted as having been unintentionally delayed.

Telephone inquiries concerning this decision should be directed to the undersigned at (571) 272-3208.

This application is being referred to the Office of Data Management to be processed into a patent.

/KOC/
Karen Creasy
Petitions Examiner
Office of Petitions

UNITED STATES PATENT AND TRADEMARK OFFICE

Commissioner for Patents
United States Patent and Trademark Office
P.O. Box 1450
Alexandria, VA 22313-1450
www.uspto.gov

IP GROUP OF DLA PIPER US LLP
ONE LIBERTY PLACE
1650 MARKET ST, SUITE 4900
PHILADELPHIA PA 19103

COPY MAILED

FEB 13 2008

OFFICE OF PETITIONS

In re Application of	:	
Christopher Nivelet	:	
Application No. 10/974212	:	ON PETITION
Filing Date: 10/27/2004	:	
Attorney Docket Number:	:	
BDM-04-1278	:	

This is a decision on the petition under the unintentional provisions of 37 CFR 1.137(b), filed December 27, 2007, to revive the above-identified application.

The petition is **GRANTED**.

The application became abandoned for failure to timely file a reply within the meaning of 37 CFR 1.113 to the final Office action of April 4, 2007. The proposed reply required for consideration of a petition to revive must be a Notice of Appeal (and appeal fee required by 37 CFR 41.20(b)(2), an amendment that *prima facie* places the application in condition for allowance, a Request for Continued Examination and submission (37 CFR 1.114), or the filing of a continuing application under 37 CFR 1.53(b). See MPEP 711.03(c)(III)(A)(2). No extensions of time pursuant to the provisions of 37 CFR 1.136(a) were obtained. Accordingly, the date of abandonment of this application is July 5, 2007.

The petition satisfies the requirements of 37 CFR 1.137(b) in that petitioner has supplied (1) the reply in the form of a Request for Continued Examination (RCE) and fee, and the submission required by 37 CFR 1.114; (2) the petition fee; and (3) a proper statement of unintentional delay.

Telephone inquiries concerning this decision should be directed to the undersigned at (571) 272-3232.

This application is being referred to Technology Center AU 2154 for processing of the RCE and for appropriate action by the Examiner in the normal course of business on the amendment submitted in accordance with 37 CFR 1.114.

Derek L. Woods
Attorney
Office of Petitions

UNITED STATES PATENT AND TRADEMARK OFFICE

UNITED STATES DEPARTMENT OF COMMERCE
United States Patent and Trademark Office
Address: COMMISSIONER FOR PATENTS
P.O. Box 1450
Alexandria, Virginia 22313-1450
www.uspto.gov

HONEYWELL/IFL
Patent Services
101 Columbia Road
P.O.Box 2245
Morristown, NJ 07962-2245

Mail Date: 04/20/2010

Applicant	: Arul Ganesh	: DECISION ON REQUEST FOR
Patent Number	: 7630336	: RECALCULATION of PATENT
Issue Date	: 12/08/2009	: TERM ADJUSTMENT IN VIEW
Appliction No	: 10/974,216	: OF WYETH AND NOTICE OF INTENT TO
Filed	: 10/27/2004	: ISSUE CERTIFICATE OF CORRECTION
		:

The Request for Recalculation is **GRANTED** to the extent indicated.

The patent term adjustment has been determined to be **662** days. The USPTO will *sua sponte* issue a certificate of correction reflecting the amount of PTA days determined by the recalculation.

Prior to the issuance of the certificate of correction, the USPTO will afford patentee an opportunity to be heard and request reconsideration. Accordingly, patentee has **one month or thirty (30) days**, whichever is longer, to file a request for reconsideration of this patent term adjustment calculation. See 35 U.S.C. 154(b)(3)(B)(ii) and 37 CFR 1.322(a)(4). No extensions of time will be granted under 37 CFR 1.136.

Patentee should use document code PET.OP if electronically filing a request for reconsideration of this patent term adjustment calculation. The patentee must also include the information required by 37 CFR 1.705(b)(2) and the fee required by 37 CFR 1.18(e). If patentee does not file a timely request for reconsideration of this patent term adjustment calculation including the information required by 37 CFR 1.705(b)(2) and the fee required by 37 CFR 1.18(e), the USPTO will issue a certificate of correction reflecting the PTA determination noted above.

Patentee should be aware that in order to preserve the right to review in the United States District Court for the District of Columbia of the USPTO patent term adjustment determination, patentee must ensure that he or she also take the steps required under 35 U.S.C. 154(b)(4)(A) in a timely manner. Nothing in the request for recalculation should be construed as providing an alternative time frame for commencing a civil action under 35 U.S.C. 154(b)(4)(A).

Any questions concerning this decision should be directed to the Office of Patent Legal Administration at 571-272-7702.

UNITED STATES PATENT AND TRADEMARK OFFICE

Commissioner for Patents
United States Patent and Trademark Office
P.O. Box 1450
Alexandria, VA 22313-1450
www.uspto.gov

Caven & Aghevli LLC
c/o CPA Global
P.O. BOX 52050
MINNEAPOLIS MN 55402

MAILED

JUL 21 2009

OFFICE OF PETITIONS

In re Application of	:	
David I. Poisner	:	
Application No. 10/974,217	:	DECISION GRANTING PETITION
Filed: October 27, 2004	:	UNDER 37 CFR 1.313(c)(2)
Attorney Docket No. P20137	:	

This is a decision on the petition under 37 CFR 1.313(c)(2), filed July 20, 2009, to withdraw the above-identified application from issue after payment of the issue fee.

The petition is **GRANTED**.

The above-identified application is withdrawn from issue for consideration of a submission under 37 CFR 1.114 (request for continued examination). *See* 37 CFR 1.313(c)(2).

Petitioner is advised that the issue fee paid on July 6, 2009 cannot be refunded. If, however, this application is again allowed, petitioner may request that it be applied towards the issue fee required by the new Notice of Allowance.[1]

Telephone inquiries should be directed to Terri Williams at (571) 272-2991.

This application is being referred to Technology Center AU 2431 for processing of the request for continued examination under 37 CFR 1.114 and for consideration of the concurrently filed information disclosure statement.

Terri Williams

Terri Williams
Petitions Examiner
Office of Petitions

---

[1] *The request to apply the issue fee to the new Notice may be satisfied by completing and returning the new Part B – Fee(s) Transmittal Form (along with any balance due at the time of submission). Petitioner is advised that the Issue Fee Transmittal Form* ***must*** *be completed and timely submitted to avoid abandonment of the application.*

UNITED STATES PATENT AND TRADEMARK OFFICE

COMMISSIONER FOR PATENTS
UNITED STATES PATENT AND TRADEMARK OFFICE
P.O. BOX 1450
ALEXANDRIA, VA 22313-1450
www.uspto.gov

JJGJR.: 03-05

Paper No: __

TIMOTHY N. TROP
TROP, PRUNER & HU, P.C.
STE. 100
8554 KATY FREEWAY
HOUSTON TX 77024

COPY MAILED

MAR 1 6 2005

OFFICE OF PETITIONS

In re Application of
Boyd, et al. :
Application No. 10/974,241 : DECISION ON PETITION
Filing Date: 26 October, 2004
Attorney Docket No. ITL.0471D1US :

This is a decision on the petition filed on 25 January, 2005, and considered under 37 C.F.R. §1.53, to obtain a filing date of 26 October, 2004, for Fig. 5 as described in the specification.

The petition is **DISMISSED**.

BACKGROUND

This nonprovisional application was deposited on 26 October, 2004.

On 13 January, 2005, the Office mailed a "Notice of Omitted Items in a Nonprovisional Application," and indicated that, while a filing date had been granted, it appeared that Fig. 5 as described in the specification was omitted from the application.

The Notice informed Petitioner of three alternative responses to the Notice: (a) to contend that the materials had been submitted, providing evidence thereof and a copy of the materials; (b) to submit the omitted materials and accept the date of submission as the date of the application; or (c) to ignore the Notice and accept the application as filed.

Petitioner actually elected to do none of the above, in that while he has submitted the petition and

fee he has submitted no evidence of deposit of the Fig. 5 on filing–though he apparently has submitted a drawing identified as Fig. 5.

Petitioner:

- filed the instant petition on 25 January, 2005; and
- alleged that the instant application incorporated by reference the parent such that the presence of the drawing in the parent with the incorporation by reference results in there being no new matter if Fig. 2 as described in the specification is included in the instant application.

Analysis

A search of the official file reveals that on 26 October, 2004, Petitioner deposited the instant application, and stated therein on the first and second pages of the transmittal that this was a " . . . Divisional . . . of prior application No.: 09/693,424 . . . a Continuation of prior application No. 09/301,172 . . . " and further that "[t]he entire disclosure of the prior application . . . is considered as being part of the accompanying application and is hereby incorporated by reference."

CONCLUSION

The petition is **dismissed**.

Petitioner asserts that the first paragraph of the specification states that the application is a divisional of prior application No.: 09/693,424 (a continuation of prior application No. 09/301,172), and pending as of the filing of the instant application, and that application was incorporated by reference. This incorporation may be proper in practice before the Office. (See: MPEP §201.06(c) (in pertinent part).)[1] As a matter of expediting prosecution, Petitioner may

[1] The commentary at MPEP §201.06(c) provides in pertinent part:

* * *

INCORPORATION BY REFERENCE

* * *

In a continuation or divisional application, the safe-guard (petition and fee under former 37 C.F.R. 1.60(b)) concerning the filing of an application lacking all of the pages of the specification or sheets of drawings of the prior application has not been retained in 37 C.F.R. 1.53(b) since the specification and drawings of a continuation or divisional application are not limited to a reproduction or a "true copy" of the prior application. As a safeguard, however, an applicant may incorporate by reference the prior application by including, in the continuation or divisional application-as-filed, a statement that such specifically enumerated prior application or applications are "hereby incorporated herein by reference." The statement may appear in the specification or in the application transmittal letter. The incorporation by reference statement can only be relied upon to permit the entering of a portion of the prior application into the continuation or divisional application when the portion of the prior application has been inadvertently omitted from the submitted application papers in the continuation or divisional application The inclusion of this incorporation by reference of the prior application(s) will permit an applicant to amend the continuation or divisional application to include any subject matter in such prior application(s), without the need for a petition provided the continuation or divisional

submit a copy of the parent application with a preliminary amendment and seek entry of that amendment by the Examiner.

No petition is required for that purpose.

Because the instant petition was not occasioned by an error of the Office, the fee will not be refunded.

This file (Image File Wrapper (IFW)) is released to OIPE for further processing consistent with this decision before being forwarded for examination in due course.

Telephone inquiries concerning this decision may be directed to the undersigned at (571) 272-3214.

John J. Gillon, Jr.
Senior Attorney
Office of Petitions

---

application is entitled to a filing date notwithstanding the incorporation by reference. (Emphasis supplied.).

UNITED STATES PATENT AND TRADEMARK OFFICE

UNITED STATES DEPARTMENT OF COMMERCE
United States Patent and Trademark Office
Address: COMMISSIONER FOR PATENTS
P.O. Box 1450
Alexandria, Virginia 22313-1450
www.uspto.gov

MHKKG/Oracle (Sun)
P.O. BOX 398
AUSTIN, TX 78767

Mail Date: 04/20/2010

Applicant	: Mohamed M. AbdelAziz	: DECISION ON REQUEST FOR
Patent Number	: 7656822	: RECALCULATION of PATENT
Issue Date	: 02/02/2010	: TERM ADJUSTMENT IN VIEW
Appliction No	: 10/974,246	: OF WYETH AND NOTICE OF INTENT TO
Filed	: 10/27/2004	: ISSUE CERTIFICATE OF CORRECTION
		:

The Request for Recalculation is **GRANTED** to the extent indicated.

The patent term adjustment has been determined to be **1444** days. The USPTO will *sua sponte* issue a certificate of correction reflecting the amount of PTA days determined by the recalculation.

Prior to the issuance of the certificate of correction, the USPTO will afford patentee an opportunity to be heard and request reconsideration. Accordingly, patentee has **one month or thirty (30) days**, whichever is longer, to file a request for reconsideration of this patent term adjustment calculation. See 35 U.S.C. 154(b)(3)(B)(ii) and 37 CFR 1.322(a)(4). No extensions of time will be granted under 37 CFR 1.136.

Patentee should use document code PET.OP if electronically filing a request for reconsideration of this patent term adjustment calculation. The patentee must also include the information required by 37 CFR 1.705(b)(2) and the fee required by 37 CFR 1.18(e). If patentee does not file a timely request for reconsideration of this patent term adjustment calculation including the information required by 37 CFR 1.705(b)(2) and the fee required by 37 CFR 1.18(e), the USPTO will issue a certificate of correction reflecting the PTA determination noted above.

Patentee should be aware that in order to preserve the right to review in the United States District Court for the District of Columbia of the USPTO patent term adjustment determination, patentee must ensure that he or she also take the steps required under 35 U.S.C. 154(b)(4)(A) in a timely manner. Nothing in the request for recalculation should be construed as providing an alternative time frame for commencing a civil action under 35 U.S.C. 154(b)(4)(A).

Any questions concerning this decision should be directed to the Office of Patent Legal Administration at 571-272-7702.

UNITED STATES PATENT AND TRADEMARK OFFICE

Commissioner for Patents
United States Patent and Trademark Office
P.O. Box 1450
Alexandria, VA 22313-1450
www.uspto.gov

HUGH P. GORTLER
23 ARRIVO DRIVE
MISSION VIEJO CA 92692

MAILED

MAY 11 2009

OFFICE OF PETITIONS

In re Patent No. 7,450,294	:	
Issue Date: November 11, 2008	:	
Application No. 10/974,251	:	DECISION ON PETITION
Filed: October 27, 2004	:	
Attorney Docket No. 03-1044A	:	

This is a decision on the petition, filed, December 23, 2008, which is being treated as a request under 37 CFR 3.81(b)[1] to correct the assignee's name on the Fee(s) Transmittal form PTOL-85(b) by way of a certificate of correction in the patent to be issued from the above-identified application.

The request is **GRANTED**.

Petitioner states that the assignee's name is "The Boeing Company" and that the assignee's name was not included on the Fee(s) Transmittal form PTOL-85(b) at the time of payment of the issue fee. Accordingly, petitioner requests that a certificate of correction be issued to reflect the correct assignee on the front page of the Letters Patent in the patent to be issued from the application.

37 CFR 3.81(b), effective June 25, 2004, reads:

> *After payment of the issue fee:* Any request for issuance of an application in the name of the assignee submitted after the date of payment of the issue fee, and any request for a patent to be corrected to state the name of the assignee, must state that the assignment was submitted for recordation as set forth in § 3.11 before issuance of the patent, and must include a request for a certificate of correction under § 1.323 of this chapter (accompanied by the fee set forth in § 1.20(a) and the processing fee set forth in § 1.17(i) of this chapter.

[1] *See* MPEP 1309, subsection II; and Official Gazette of June 22, 2004.

The request was accompanied by a certificate of correction (and fee) as required by 3.81(b). Further, Office assignment records reflect that "The Boeing Company" is the assignee of record. Accordingly, as the request complies with the provisions of 37 CFR 3.81(b), it would be appropriate for a certificate of correction to be processed after issuance of this application into a patent.

Inquiries concerning this decision should be directed to the Michelle R. Eason at (571) 272-4231. Any questions concerning the issuance of a certificate of correction should be directed to the Certificates of Correction Branch at (571) 272-4200.

This matter is being referred to the Certificates of Correction Branch for processing of a certificate of correction after issuance of this application into a patent.

Thurman Page
Petitions Examiner
Office of Petitions

UNITED STATES PATENT AND TRADEMARK OFFICE

Commissioner for Patents
United States Patent and Trademark Office
P.O. Box 1450
Alexandria, VA 22313-1450
www.uspto.gov

Rutan & Tucker, LLP
611 Anton Boulevard
Suite 1400
Costa Mesa, CA 92626

COPY MAILED

SEP 15 2008

In re Application of	:	
Paul T. Wegener et al.	:	
Application No. 10/974,253	:	DECISION ON PETITION
Filed: October 26, 2004	:	TO WITHDRAW
Attorney Docket No. 100799.0010US1	:	FROM RECORD

This is a decision on the Requests to Withdraw as attorney or agent of record under 37 C.F.R. § 1.36(b), filed August 22, 2008 and September 3, 2008.

The request is **NOT APPROVED.**

A grantable request to withdraw as attorney/agent of record must be signed by every attorney/agent seeking to withdraw or contain a clear indication that one attorney is signing on behalf of another/others. The Office requires the practitioner(s) requesting withdrawal to certify that he, she, or they have: (1) given reasonable notice to the client, prior to the expiration of the response period, that the practitioner(s) intends to withdraw from employment; (2) delivered to the client or a duly authorized representative of the client all papers and property (including funds) to which the client is entitled; and (3) notified the client of any responses that may be due and the time frame within which the client must respond, pursuant 37 CFR 10.40(c).

The request cannot be approved because there is no indication that the acts noted in the above-identified certifications have been performed. Refer to Form No. PTO/SB/83 (Updated 4/2008).

The Office cannot further approve the request at this time since the reasons provided do not meet any of the conditions under the mandatory or permissive categories enumerated in 37 CFR 10.40. Section 10.40 of Title 37 of the Code of Federal Regulation states, "[a] practitioner shall not withdraw from employment in a proceeding before the Office without permission from the Office[.]" More specifically, 37 CFR 10.40 states, "[i]f paragraph (b) of this section is not applicable, a practitioner may not request permission to withdraw in matter pending before the Office unless such request or such withdrawal is" for one the permissive reasons listed in 37 CFR 10.40(c).

All future communications from the Office will continue to be directed to the above-listed address until otherwise notified by applicant.

Telephone inquiries concerning this decision should be directed to the undersigned at 571-272- 6735.

Kimberly Inabinet
Petitions Examiner
Office of Petitions

cc: Robert Fish
Fish & Associates, PC
2603 Main Street, Suite 1050
Irvine, CA 92614

UNITED STATES PATENT AND TRADEMARK OFFICE

Commissioner for Patents
United States Patent and Trademark Office
P.O. Box 1450
Alexandria, VA 22313-1450
www.uspto.gov

ALLERGAN, INC.
2525 DUPONT DRIVE
T2-7H
IRVINE, CA 92612-1599

COPY MAILED

APR 17 2007

OFFICE OF PETITIONS

In re Application of
Robert M. Burk et al
Application No. 10/974,268
Filed: October 26, 2004
Attorney Docket No. 17472CON2 (AP)

: DECISION ON PETITION
: UNDER 37 CFR 1.313(c):

This is a decision on the petition under 37 CFR 1.313(c), filed April 12, 2007, to withdraw the above-identified application from issue after payment of the issue fee. This is also being treated as a petition under 37 CFR 1.78(a)(3) to accept an unintentionally delayed claim under 35 U.S.C. §120 for the benefit of priority to prior-filed nonprovisional Application No. 10/701,977, filed November 4, 2003.

The petition under 37 CFR 1.313(c) is **DISMISSED**.

The petition under 37 CFR 1.78(a)(3) is **DISMISSED.**

DISCUSSION OF PETITION UNDER 37 CFR 1.313(c)

Petitioner requests that this application be withdrawn from issue in order to correct the claim for benefit of priority to the above-noted application.

The issue fee in this application was paid on March 19, 2007.

37 CFR 1.313(c) provides that:

Once the issue fee has been paid, the application will not be withdrawn from issue upon petition by the applicant for any reason except:

(1) Unpatentability of one of more claims, which petition must be accompanied by an unequivocal statement that one or more claims are unpatentable, an amendment to such claim or claims, and an explanation as to how the amendment causes such claim or claims to be patentable;

(2) Consideration of a request for continued examination in compliance with 37 CFR 1.114; or

(3) Express abandonment of the application. Such express abandonment may be in favor of a continuing application.

Upon payment of the issue fee, an application will not be withdrawn from issue upon petition except for the reasons enumerated in 37 CFR 1.313(c). The circumstances of the above-identified application do not fall within any of those exceptions.

In view of the above, the petition under 37 CFR 1.313(c) to withdraw this application from issue cannot be granted at this time.

Petitioner is advised that any renewed petition to withdraw this application from issue must be received and granted by the appropriate deciding official before the date of issue.

DISCUSSION OF PETITION UNDER 37 CFR 1.78(a)(3)

A petition for acceptance of a claim for late priority under 37 CFR 1.78(a)(3) is only applicable to those applications filed on or after November 29, 2000 and after the expiration of the period specified in 37 CFR 1.78(a)(2)(ii). In addition, the petition under 37 CFR 1.78(a)(3) must be accompanied by:

(1) the reference required by 35 U.S.C. § 120 and 37 CFR 1.78(a)(2)(i) and (iii) of the prior-filed application, unless previously submitted;

(2) the surcharge set forth in § 1.17(t); and

(3) a statement that the entire delay between the date the claim was due under 37 CFR 1.78(a)(2)(ii) and the date the claim was filed was unintentional. The Director may require additional information where there is a question whether the delay was unintentional.

The amendment as drafted is unacceptable and, therefore, is not considered a proper reference under 37 CFR 1.78(a)(2)(i). In this regard, the amendment is physically part of the petition and, as such, does not comply with 37 CFR 1.121, 1.52, or 1.4(c). Note that 37 CFR 1.121 states that amendments are made by filing a paper, in compliance with § 1.52, directing that specified amendments be made. The pertinent section of 37 CFR 1.52 provides that the claim (in this case, the claim for priority) must commence on a separate physical sheet. 37 CFR 1.4(c) provides that each distinct subject must be contained in a separate paper since different matters may be considered by different branches of the United States Patent and Trademark Office.

The amendment as drafted is further unacceptable since it improperly incorporates by reference the prior-filed application. An incorporation by reference statement added after an application's filing date is not effective because no new matter can be added to an application after its filing date (*see* 35 U.S.C. § 132(a)). If an incorporation by reference statement is included in an amendment to the specification to add a benefit claim under 35 U.S.C. § 120 after the filing date of the application, the amendment would not be proper. When a benefit claim under 35 U.S.C. §

120 is submitted after the filing of an application, the reference to the prior application cannot include an incorporation by reference statement of the prior application. *See* Dart Industries v. Banner, 636 F.2d 684, 207 USPQ 273 (C.A.D.C. 1980). *Note* MPEP §§ 201.06(c) and 608.04(b). *See also* In re Fouche, 439 F.2d 1237, 169 USPQ 429 (CCPA 1971).

Before the petition under 37 CFR § 1.78(a)(3) can be granted, a renewed petition and either an Application Data Sheet or a substitute amendment (complying with the provisions of 37 CFR 1.121 and 37 CFR 1.76(b)(5)) to correct the above matters are required. Additionally, if petitioner desires to withdraw this application from issue, a renewed petition under 37 CFR 1.313(c) must also be submitted.

As authorized, the $130 fee for the petition under 37 CFR 1.313(c) and the $1,370 surcharge fee for the petition under 37 CFR 1.78(a)(3) have been charged to petitioner's deposit account.

Further correspondence with respect to this matter should be addressed as follows:

By mail: Mail Stop PETITIONS
Commissioner for Patents
Post Office Box 1450
Alexandria, VA 22313-1450

By hand: Customer Service Window
Mail Stop Petitions
Randolph Building
401 Dulany Street
Alexandria, VA 22314

By fax: (571) 273-8300
ATTN: Office of Petitions

Any questions concerning this matter may be directed to the undersigned at (571) 272-3218.

Frances Hicks
Petitions Examiner
Office of Petitions

UNITED STATES PATENT AND TRADEMARK OFFICE

Commissioner for Patents
United States Patent and Trademark Office
P.O. Box 1450
Alexandria, VA 22313-1450
www.uspto.gov

MAR - 7 2005

MAILED

MAR 7 2005
OFFICE OF THE DIRECTOR
TC 3600

Brown Raysman Millstein Felder & Steiner LLP
Attorney for Applicants
900 Third Avenue
New York, NY 10022

In re application of :
Jonathan Schull :
Application No. 10/974,280 :
Filed: October 27, 2004 :
For: SYSTEM AND METHOD FOR PROCESSING PROTECTED VIDEO INFORMATION

DECISION ON PETITION TO MAKE SPECIAL (INFRINGEMENT)

This is a decision on the petition under 37 C.F.R §1.102(d) filed February 07, 2005 to make the above-identified application special. The petition requests that the above-identified application be made special under the procedure set forth in M.P.E.P. § 708.02, item II: Infringement.

MPEP 708.02 states that a Petition to Make Special based on Infringement must have the following: (1) the appropriate petition fee under 37 CFR 1.17(h); (2) a statement by the assignee, applicant, or attorney alleging: (A) that there is an infringing device or product actually on the market or method in use; (B) that a rigid comparison of the alleged infringing device, product or method with the claims of the application has been made, and that, in his or her opinion, some of the claims are unquestionably infringed; and (C) that he or she has made a careful and thorough search of the prior art, or has good knowledge of the prior art, and has sent a copy of the references deemed most closely related to the subject matter encompassed by the claims.

The petition filed February 07, 2005 lacks requirement 2(C) above. In this regard the application file has been reviewed, and no copies provided by applicant, of the most closely related prior art, have been located. In view of this deficiency, the petition is **DISMISSED**.

Any request for reconsideration must be filed within TWO MONTHS of the date of this decision. Extensions of time under 37 CFR 1.136(a) are permitted. Should petitioner desire reconsideration, he should supplement this petition by a declaration or statement giving the information as outlined above.

Applicant should promptly submit a renewed petition to the Commissioner for Patents, P.O. Box 1450, Alexandria, VA 22313-1450. The envelope should indicate that the correspondence be brought to the attention of Technology Center 3600.

Until the renewed petition is submitted, the application will be returned to the examiner's docket to await treatment on the merits in the normal order of examination.

Steven N. Meyers
Special Programs Examiner
Technology Center 3600
(703) 308-3868

SNM/pav: 02/16/05

UNITED STATES PATENT AND TRADEMARK OFFICE

Commissioner for Patents
United States Patent and Trademark Office
P.O. Box 1450
Alexandria, VA 22313-1450
www.uspto.gov

MAY 25 2005

BROWN RAYSMAN MILLSTEIN
FELDER & STEINER LLP
Attorney for Applicants
900 Third Avenue
New York, NY 10022

In re application of	:	**DECISION ON RENEWED**
Jonathan Schull	:	**PETITION TO MAKE**
Application No. 10/974,280	:	**SPECIAL (INFRINGEMENT)**
Filed: October 27, 2004	:	
For: SYSTEM AND METHOD FOR PROCESSING PROTECTED VIDEO INFORMATION		

This is a decision on the renewed petition under 37 C.F.R § 1.102(d) filed April 11, 2005 to make the above-identified application special.

The petition requests that the above-identified application be made special under the procedure set forth in M.P.E.P. § 708.02, item II: Infringement.

MPEP 708.02 states that a Petition to Make Special based on Infringement must have the following: (1) the appropriate petition fee under 37 CFR 1.17(i); (2) a statement by the assignee, applicant, or attorney alleging: (A) that there is an infringing device or product actually on the market or method in use; (B) that a rigid comparison of the alleged infringing device, product or method with the claims of the application has been made, and that, in his or her opinion, some of the claims are unquestionably infringed; and (C) that he or she has made a careful and thorough search of the prior art, or has good knowledge of the prior art, and has sent a copy of the references deemed most closely related to the subject matter encompassed by the claims.

The original petition of February 07, 2005 was dismissed on March 07, 2005 for failing to satisfy condition 2(C) above. The renewed petition satisfies the above deficiency.

The renewed petition filed April 11, 2005 meets all of the requirements above and, therefore, the petition is **GRANTED**.

The examiner is directed (1) to make an interference search for possible interfering applications; (2) to promptly examine this application out of turn; and (3) if any interfering application is discovered, to examine such application simultaneously and state in the first official letter of such application that it is being taken out of turn because of a possible interference.

Petitioner is advised that this application will continue to be special, throughout its entire prosecution and pendency, including interference and appeal, if any, only if petitioner makes a prompt *bona fide* effort, in response to each Office action, to place the application in condition for allowance, even if it is necessary to conduct an interview with the examiner to accomplish this purpose.

Kenneth J. Dorner
Special Programs Examiner
Technology Center 3600
(571) 272-6587

KJD/pav: 05/19/05

UNITED STATES PATENT AND TRADEMARK OFFICE

Commissioner for Patents
United States Patent and Trademark Office
P.O. Box 1450
Alexandria, VA 22313-1450
www.uspto.gov

SAND & SEBOLT
AEGIS TOWER, SUITE 1100
4940 MUNSON STREET, NW
CANTON OH 44718-3615

COPY MAILED

MAY 1 0 2007

OFFICE OF PETITIONS

In re Application of

CHANDARIA, Ashok V.
Application No. 10/974,284
Filed: October 27, 2004
Attorney Docket No. **1002134US1AP**

DECISION ON PETITION
TO WITHDRAW
FROM RECORD

This is a decision on the Request to Withdraw as attorney or agent of record under 37 C.F.R. § 1.36(b), filed January 18, 2007.

The request is **NOT APPROVED**.

A grantable request to withdraw as attorney/agent of record must be signed by every attorney/agent seeking to withdraw or contain a clear indication that one attorney is signing on behalf of another/others. A request to withdraw will not be approved unless at least 30 (thirty) days would remain between the date of approval and the later of the expiration date of a time to file a response or the expiration date of the maximum time period which can be extended under 37 C.F.R. § 1.136(a).

The request cannot be approved because no reasons for withdrawal have been provided. The Office cannot, at this time, determine whether practitioner's request is one of the mandatory or permissive reasons enumerated in 37 CFR 10.40. Any subsequent requests must include reasons for withdrawal. Please note that there is a space provided for on PTO/SB/83 (Request to Withdraw as Attorney or Agent) to supply practitioner's reasons.

All future communications from the Office will continue to be directed to the above-listed address until otherwise notified by applicant.

Telephone inquiries concerning this decision should be directed to Michelle R. Eason at 571-272- 4231.

Terri Williams

Terri Williams
Petitions Examiner
Office of Petitions

cc: **JARDEN CORPORATION**
DAVID L. BERDAN, ESQ.
3600 N. HYDRAULLC
WICHITA, KANSAS 67219

UNITED STATES DEPARTMENT OF COMMERCE
U.S. Patent and Trademark Office
Address: COMMISSIONER FOR PATENTS
P.O. Box 1450
Alexandria, Virginia 22313-1450

APPLICATION NO./ CONTROL NO.	FILING DATE	FIRST NAMED INVENTOR / PATENT IN REEXAMINATION	ATTORNEY DOCKET NO.
10974286	10/27/04	BRUCHMANN ET AL.	P0020721.00

EXAMINER
CARL H.. LAYNO

ART UNIT	PAPER
3766	20080619

DATE MAILED: JUN 26 2008

MEDTRONIC, INC.
710 MEDTRONIC PARKWAY NE
MINNEAPOLIS, MN 55432-9924

Please find below and/or attached an Office communication concerning this application or proceeding.

Commissioner for Patents

See attached Petition Decision.

/Carl H. Layno/
Supervisory Patent Examiner, Art Unit 3766

UNITED STATES PATENT AND TRADEMARK OFFICE

Commissioner for Patents
United States Patent and Trademark Office
P.O. Box 1450
Alexandria, VA 22313-1450
www.uspto.gov

In re Patent No. 7,257,445 (BRUCHMANN ET AL.) Issue Date: August 14, 2007 Appl No.: 10/974,286 Filed: October 27, 2004 For. Cert. of Correction adding inventors James Strom and John E. Nicholson to the patent	**DECISION GRANTING PETITION** *37 CFR 1.324*

This is a decision on the petition filed June 18, 2008 to correct inventorship under 37 CFR 1.324.

The petition is granted.

The patented file is being forwarded to Certificate of Corrections Branch for issuance of a certificate naming only the actual inventor or inventors.

/Carl H. Layno/

Carl H. Layno
Supervisory Patent Examiner
Art Unit 3766
Technology Center 3700

MEDTRONIC, INC.
710 MEDTRONIC PARKWAY NE
MINNEAPOLIS, MN 55432-9924

UNITED STATES PATENT AND TRADEMARK OFFICE

COMMISSIONER FOR PATENTS
UNITED STATES PATENT AND TRADEMARK OFFICE
P.O. BOX 1450
ALEXANDRIA, VA 22313-1450
www.uspto.gov

ANDREW W. LUDY
17 SHERWOOD WAY
P.O. BOX 418
MT. ARLINGTON, NJ 07856

COPY MAILED

DEC 21 2007

OFFICE OF PETITIONS

In re Application of :
Oren Cotton :
Application No. 10/974,324 :
Filed: October 27, 2004 :
Attorney Docket No. 1066 :

ON PETITION

This is a decision in response to the petition, filed July 18, 2007, to revive the above-identified application under the provisions of 37 CFR 1.137(b).

The petition is **DISMISSED**.

Any request for reconsideration of this decision must be submitted within TWO (2) MONTHS from the mail date of this decision. Extensions of time under 37 CFR 1.136(a) are permitted. The reconsideration request should include a cover letter entitled "Renewed Petition under 37 CFR 1.137(b)." This is **not** a final agency action within the meaning of 5 U.S.C. § 704.

A grantable petition under 37 CFR 1.137(b)[1] must be accompanied by: (1) the required reply,[2] unless previously filed; (2) the petition fee as set forth in 37 CFR 1.17(m); (3) a statement that the entire delay in filing the required reply from the due date for the reply until the filing of a grantable petition pursuant to 37 CFR 1.137(b) was unintentional; and (4) any terminal disclaimer (and fee as set forth in 37 CFR 1.20(d)) required by 37 CFR 1.137(c). Where there is a question as to whether either the abandonment or the delay in filing a petition under 37 CFR 1.137 was unintentional, the Commissioner may require additional information. See MPEP 711.03(c)(II)(C) and (D). The instant petition lacks item 1.

It is noted that an amendment was included with the petition filed on July 18, 2007. However, the amendment is considered non-responsive, since it did not place the application in condition for allowance. See the attached Advisory Action. The proposed reply required for consideration of a petition to revive this application must be a Notice of Appeal (and appeal fee required by 37 CFR 1.17(b)), an amendment that *prima facie* places the application in condition for

[1] As amended effective December 1, 1997. See Changes to Patent Practice and Procedure; Final Rule Notice, 62 Fed. Reg. 53131, 53194-95 (October 10, 1997), 1203 Off. Gaz. Pat. Office 63, 119-20 (October 21, 1997).

[2] In a nonprovisional application abandoned for failure to prosecute, the required reply may be met by the filing of a continuing application. In an application or patent, abandoned or lapsed for failure to pay the issue fee or any portion thereof, the required reply must be the payment of the issue fee or any outstanding balance thereof.

allowance, or the filing of a submission under 37 CFR 114 (RCE) or a continuing application under 37 CFR 1.53(b). See MPEP 711.03(c)(II)(A)(2).

Further correspondence with respect to this matter should be addressed as follows:

By mail: Mail Stop PETITION
Commissioner for Patents
Post Office Box 1450
Alexandria, VA 22313-1450

By hand: U.S. Patent and Trademark Office
Customer Service Window, Mail Stop PETITION
Randolph Building
401 Dulany Street
Alexandria, VA 22314

The centralized facsimile number is **(571) 273-8300**.

Any questions concerning this matter may be directed to the undersigned at (571) 272-3204.

Sherry D. Brinkley
Petitions Examiner
Office of Petitions

Attachment: Advisory Action

Advisory Action Before the Filing of an Appeal Brief	Application No. 10/974,324	Applicant(s) COTTON, OREN	
	Examiner Todd M. Epps	Art Unit 3632	

--The MAILING DATE of this communication appears on the cover sheet with the correspondence address --

THE REPLY FILED 27 July 2007 FAILS TO PLACE THIS APPLICATION IN CONDITION FOR ALLOWANCE.

1 ☒ The reply was filed after a final rejection, but prior to or on the same day as filing a Notice of Appeal. To avoid abandonment of this application, applicant must timely file one of the following replies: (1) an amendment, affidavit, or other evidence, which places the application in condition for allowance; (2) a Notice of Appeal (with appeal fee) in compliance with 37 CFR 41.31; or (3) a Request for Continued Examination (RCE) in compliance with 37 CFR 1.114. The reply must be filed within one of the following time periods:

a) ☒ The period for reply expires 3 months from the mailing date of the final rejection.

b) ☐ The period for reply expires on: (1) the mailing date of this Advisory Action, or (2) the date set forth in the final rejection, whichever is later. In no event, however, will the statutory period for reply expire later than SIX MONTHS from the mailing date of the final rejection.

Examiner Note: If box 1 is checked, check either box (a) or (b). ONLY CHECK BOX (b) WHEN THE FIRST REPLY WAS FILED WITHIN TWO MONTHS OF THE FINAL REJECTION. See MPEP 706.07(f).

Extensions of time may be obtained under 37 CFR 1.136(a). The date on which the petition under 37 CFR 1.136(a) and the appropriate extension fee have been filed is the date for purposes of determining the period of extension and the corresponding amount of the fee. The appropriate extension fee under 37 CFR 1.17(a) is calculated from: (1) the expiration date of the shortened statutory period for reply originally set in the final Office action, or (2) as set forth in (b) above, if checked. Any reply received by the Office later than three months after the mailing date of the final rejection, even if timely filed, may reduce any earned patent term adjustment. See 37 CFR 1.704(b).

NOTICE OF APPEAL

2. ☐ The Notice of Appeal was filed on _____. A brief in compliance with 37 CFR 41.37 must be filed within two months of the date of filing the Notice of Appeal (37 CFR 41.37(a)), or any extension thereof (37 CFR 41.37(e)), to avoid dismissal of the appeal. Since a Notice of Appeal has been filed, any reply must be filed within the time period set forth in 37 CFR 41.37(a).

AMENDMENTS

3. ☒ The proposed amendment(s) filed after a final rejection, but prior to the date of filing a brief, will not be entered because

(a) ☒ They raise new issues that would require further consideration and/or search (see NOTE below);

(b) ☐ They raise the issue of new matter (see NOTE below);

(c) ☐ They are not deemed to place the application in better form for appeal by materially reducing or simplifying the issues for appeal; and/or

(d) ☒ They present additional claims without canceling a corresponding number of finally rejected claims.

NOTE: *The word "attachment means" was removed and made the claim broader, which would require further consideration and search.* (See 37 CFR 1.116 and 41.33(a)).

4. ☐ The amendments are not in compliance with 37 CFR 1.121. See attached Notice of Non-Compliant Amendment (PTOL-324).

5. ☐ Applicant's reply has overcome the following rejection(s): _____.

6 ☐ Newly proposed or amended claim(s) _____ would be allowable if submitted in a separate, timely filed amendment canceling the non-allowable claim(s).

7. ☒ For purposes of appeal, the proposed amendment(s): a) ☒ will not be entered, or b) ☐ will be entered and an explanation of how the new or amended claims would be rejected is provided below or appended.

The status of the claim(s) is (or will be) as follows:

Claim(s) allowed: _____.

Claim(s) objected to: _____.

Claim(s) rejected: 20-23.

Claim(s) withdrawn from consideration: _____.

AFFIDAVIT OR OTHER EVIDENCE

8. ☐ The affidavit or other evidence filed after a final action, but before or on the date of filing a Notice of Appeal will not be entered because applicant failed to provide a showing of good and sufficient reasons why the affidavit or other evidence is necessary and was not earlier presented. See 37 CFR 1.116(e).

9. ☐ The affidavit or other evidence filed after the date of filing a Notice of Appeal, but prior to the date of filing a brief, will not be entered because the affidavit or other evidence failed to overcome all rejections under appeal and/or appellant fails to provide a showing a good and sufficient reasons why it is necessary and was not earlier presented. See 37 CFR 41.33(d)(1).

10 ☐ The affidavit or other evidence is entered. An explanation of the status of the claims after entry is below or attached.

REQUEST FOR RECONSIDERATION/OTHER

11. ☐ The request for reconsideration has been considered but does NOT place the application in condition for allowance because _____.

12. ☐ Note the attached Information Disclosure Statement(s). (PTO/SB/08) Paper No(s). _____

13. ☐ Other: _____.

A. JOSEPH WUJCIAK III
PRIMARY EXAMINER
TECHNOLOGY CENTER

TMG 12/19/07

UNITED STATES PATENT AND TRADEMARK OFFICE

COMMISSIONER FOR PATENTS
UNITED STATES PATENT AND TRADEMARK OFFICE
P.O. BOX 1450
ALEXANDRIA, VA 22313-1450
www.uspto.gov

ANDREW W. LUDY
17 SHERWOOD WAY
P.O. BOX 418
MT. ARLINGTON, NJ 07856

COPY MAILED
AUG 13 2008

In re Application of
Oren Cotton
Application No. 10/974,324
Filed: October 27, 2004
Attorney Docket No. 1066

DECISION ON PETITION

This is a decision in response to the communication filed February 19, 2008, which is being treated as a renewed petition under the unintentional provisions of 37 CFR 1.137(b) to revive the above-identified application.

The petition is **GRANTED**.

The two-month period for filing an appeal brief under 37 CFR 41.37 (accompanied by the fee required by 37 CFR 41.20(b)(2)), runs from the date of this decision.

This application became abandoned for failure to timely file a reply within the meaning of 37 CFR 1.113 to the final Office action of December 19, 2006. A Notice of Abandonment was mailed on July 19, 2007. On July 27, 2007, a petition to revive under 37 CFR 1.137(b) was filed; however, the petition was dismissed in a decision mailed December 21, 2007. In response, on February 19, 2008, the present "petition" was filed.

The petition now satisfies the requirements of 37 CFR 1.137(b) in that petitioner has supplied (1) the reply in the form of a Notice of Appeal and appeal fee; (2) the petition fee of $750; and (3) an adequate statement of unintentional delay.

This application is being referred to Technology Center AU 3632 to await the filing of an appeal brief or for such other appropriate reply as may be submitted to continue prosecution of the application.

Telephone inquiries concerning this decision may be directed to the undersigned at (571) 272-3204. Inquiries relating to the prosecution of the application should be referred to the Technology Center.

Sherry D. Brinkley
Petitions Examiner
Office of Petitions

UNITED STATES PATENT AND TRADEMARK OFFICE

UNITED STATES DEPARTMENT OF COMMERCE
United States Patent and Trademark Office
Address: COMMISSIONER FOR PATENTS
P.O. Box 1450
Alexandria, Virginia 22313-1450
www.uspto.gov

HONEYWELL INTERNATIONAL INC.
PATENT SERVICES
101 COLUMBIA ROAD
P O BOX 2245
MORRISTOWN, NJ 07962-2245

Mail Date: 04/21/2010

Applicant	: Leonard W. Wubs	: DECISION ON REQUEST FOR
Patent Number	: 7593056	: RECALCULATION of PATENT
Issue Date	: 09/22/2009	: TERM ADJUSTMENT IN VIEW
Appliction No	: 10/974,337	: OF WYETH AND NOTICE OF INTENT TO
Filed	: 10/27/2004	: ISSUE CERTIFICATE OF CORRECTION
		:

The Request for Recalculation is **GRANTED** to the extent indicated.

The patent term adjustment has been determined to be **1142** days. The USPTO will *sua sponte* issue a certificate of correction reflecting the amount of PTA days determined by the recalculation.

Prior to the issuance of the certificate of correction, the USPTO will afford patentee an opportunity to be heard and request reconsideration. Accordingly, patentee has **one month or thirty (30) days**, whichever is longer, to file a request for reconsideration of this patent term adjustment calculation. See 35 U.S.C. 154(b)(3)(B)(ii) and 37 CFR 1.322(a)(4). No extensions of time will be granted under 37 CFR 1.136.

Patentee should use document code PET.OP if electronically filing a request for reconsideration of this patent term adjustment calculation. The patentee must also include the information required by 37 CFR 1.705(b)(2) and the fee required by 37 CFR 1.18(e). If patentee does not file a timely request for reconsideration of this patent term adjustment calculation including the information required by 37 CFR 1.705(b)(2) and the fee required by 37 CFR 1.18(e), the USPTO will issue a certificate of correction reflecting the PTA determination noted above.

Patentee should be aware that in order to preserve the right to review in the United States District Court for the District of Columbia of the USPTO patent term adjustment determination, patentee must ensure that he or she also take the steps required under 35 U.S.C. 154(b)(4)(A) in a timely manner. Nothing in the request for recalculation should be construed as providing an alternative time frame for commencing a civil action under 35 U.S.C. 154(b)(4)(A).

Any questions concerning this decision should be directed to the Office of Patent Legal Administration at 571-272-7702.

UNITED STATES PATENT AND TRADEMARK OFFICE

Commissioner for Patents
United States Patent and Trademark Office
P.O. Box 1450
Alexandria, VA 22313-1450
www.uspto.gov

RATNERPRESTIA
P.O. BOX 980
VALLEY FORGE PA 19482-0980

COPY MAILED

DEC 15 2004

OFFICE OF PETITIONS

In re Application of :
Jyh-Long Chern et al :
Application No. 10/974,341 :
Filed: October 27, 2004 :
Attorney Docket No. LTP-100US :

NOTICE

This is a notice regarding your request for acceptance of a fee deficiency submission under 37 CFR 1.28. On September 1, 1998, the Court of Appeals for the Federal Circuit held that 37 CFR 1.28(c) is the sole provision governing the time for correction of the erroneous payment of the issue fee as a small entity. **See DH Technology v. Synergystex International, Inc. 154 F.3d 1333, 47 USPQ2d 1865 (Fed. Cir. Sept. 1, 1998).**

The Office no longer investigates or rejects original or reissue applications under 37 CFR 1.56. **1098 Off. Gaz. Pat. Office 502 (January 3, 1989)**. Therefore, nothing in this Notice is intended to imply that an investigation was done.

Your fee deficiency submission under 37 CFR 1.28 is hereby **ACCEPTED**.

This application no longer qualifies for small entity status. Accordingly, all future fees must be paid at the large entity rate.

Inquiries related to this communication should be directed to the undersigned at (571) 272-3208.

Karen Creasy

Karen Creasy
Petitions Examiner
Office of Petitions
Office of the Deputy Commissioner
for Patent Examination Policy

UNITED STATES PATENT AND TRADEMARK OFFICE

Commissioner for Patents
United States Patent and Trademark Office
P.O. Box 1450
Alexandria, VA 22313-1450
www.uspto.gov

TREXLER, BUSHNELL, GIANGIORGI,
BLACKSTONE & MARR, LTD.
105 W. ADAMS STREET
CHICAGO IL 60603

COPY MAILED

APR 11 2005

OFFICE OF PETITIONS

In re Application of
Romita & Castillo
Application No. 10/974,344
Filed: October 27, 2004
Attorney Docket No. 464/41449/16
For: REMOVABLE PORTION FORMAT

DECISION ACCORDING STATUS
UNDER 37 CFR 1.47(a)

This is in response to the petition under 37 CFR 1.47(a), filed February 4, 2005.

The petition is granted.

Petitioner has shown that the non-signing inventor, John M. Romita, has constructively refused to join in the filing of the above-identified application after having been presented with the application papers. Specifically, the statement of facts of Attorney David J. Marr establishes that the inventor was mailed the application papers, including the specification, claims and drawings, but failed to respond to the request that he sign the declaration. Petitioner has submitted a declaration in compliance with 37 CFR 1.63 and 1.64.

This application and papers have been reviewed and found in compliance with 37 CFR 1.47(a). This application is hereby accorded Rule 1.47(a) status.

As provided in Rule 1.47(c), this Office will forward notice of this application's filing to the non-signing inventor at the address given in the petition. Notice of the filing of this application will also be published in the Official Gazette.

After this decision is mailed, the above-identified application will be forwarded to the Office of Initial Patent Examination for further processing.

Telephone inquiries should be directed to the undersigned at (571) 272-3230.

E. Shirene Willis

E. Shirene Willis
Senior Petitions Attorney
Office of Petitions

UNITED STATES PATENT AND TRADEMARK OFFICE

Commissioner for Patents
United States Patent and Trademark Office
P.O. Box 1450
Alexandria, VA 22313-1450
www.uspto.gov

JOHN ROMITA
3308 CASEY COURT
LOCKPORT, IL 60441

COPY MAILED

APR 11 2005

LETTER OFFICE OF PETITIONS

In re Application of
Romita & Castillo
Application No. 10/974,344
Filed: October 27, 2004
Attorney Docket No. 464/41449/16
For: REMOVABLE PORTION FORMAT

Dear Mr. Romita:

You are named as a joint inventor in the above identified United States patent application, filed under the provisions of 35 U.S.C. 116 (United States Code), and 37 CFR 1.47(a), Rules of Practice in Patent Cases. Should a patent be granted on the application you will be designated therein as a joint inventor.

As a named inventor you are entitled to inspect any paper in the file wrapper of the application, order copies of all or any part thereof (at a prepaid cost per 37 CFR 1.19) or make your position of record in the application. Alternatively, you may arrange to do any of the preceding through a registered patent attorney or agent presenting written authorization from you. If you care to join the application, counsel of record (see below) would presumably assist you. Joining in the application would entail the filing of an appropriate oath or declaration by you pursuant to 37 CFR 1.63.

Requests for information regarding your application should be directed to the File Information Unit at (703)308-2733. Information regarding how to pay for and order a copy of the application, or a specific paper in the application, should be directed to Certification Division at (703)308-9726 or 1(800)972-6382 (outside the Washington D.C. area).

Telephone inquiries regarding this communication should be directed to the undersigned at (571) 272-3230.

E. Shirene Willis

E. Shirene Willis
Senior Petitions Attorney
Office of Petitions

ATTORNEY OF RECORD: TREXLER, BUSHNELL, GIANGIORGI,
BLACKSTONE & MARR, LTD.
105 W. ADAMS STREET
CHICAGO IL 60603

UNITED STATES PATENT AND TRADEMARK OFFICE

Commissioner for Patents
United States Patent and Trademark Office
P.O. Box 1450
Alexandria, VA 22313-1450
www.uspto.gov

August 2005

TREXLER, BUSHNELL, GIANGIORGI, BLACKSTONE, & MARR, LTD.
105 W. ADAMS STREET
CHICAGO, IL 60603

SEP - 8 2005

In re Application of: WILLIAM CASTILLO Serial No.: 10/974,344 Filed: 27 October 2004 Docket: 464/41449/16 Title: REMOVABLE PORTION FORMAT	:	DECISION ON PETITION TO MAKE SPECIAL UNDER 37 C.F.R. § 1.102(d)

This is a decision on the petition filed on May 23, 2005, to make the above-identified application special under the accelerated examination procedure set forth in MPEP § 708.02(VIII) in accordance with 37 C.F.R. § 1.102(d).

The petition to make the application special is **GRANTED**.

In support of the petition, petition provides: a) the applicable petition fee; b) a statement that a pre-examination search was made, including the search areas; c) a statement that all claims are directed towards a single invention; and d) a detailed discussion of each of a number of references submitted as being pertinent to patentability, pointing out how the claimed subject matter is distinguishable over those references.

For accelerated examination under MPEP § 708.02(VIII) in accordance with 37 C.F.R. § 1.102(d), a petition with the following showing is required: a) a petition fee; b) all claims are directed to a single invention; c) a statement that a pre-examination search was made, including the search areas; d) a copy of each of the (non-US) references deemed most closely related to the claimed subject matter; and e) a detailed discussion of the references pointing out with the particularity required by 37 CFR 1.111 (b) and (c), how the claimed subject matter is distinguishable over the references.

The requirements of MPEP § 708.02(VIII)(a) – (e) are considered to have been met. The application will be advanced out of turn for examination, and will continue to be treated as special throughout the entire prosecution in the Office according to the procedure set forth in MPEP § 708.02(VIII). Any restriction later required by the Office must be responded with an election without traverse by applicant as a condition for the application retaining its special status.

The application file is being forwarded to the examiner for expedited prosecution.

If the examiner can make this application special without prejudice to any possible interfering applications, and he/she should make a rigid search for such, he/she is authorized to do so for the next action. Should the application be rejected, the application will not be considered special for the subsequent action unless the applicant promptly makes a bona fide effort to place the application in condition for allowance, even if it is necessary to have an interview with the examiner to accomplish this purpose.

If the examiner finds any interfering application for the same subject matter, he/she should consider such application simultaneously with this application and should state in the official letter of such application that he/she is taking it out of its turn because of possible interference.

Should an appeal be taken in this application or should this application becomes involved in an interference, consideration of the appeal and the interference will be expedited by all Patent and Trademark Office officials concerned, contingent likewise upon diligent prosecution by the applicant.

After allowance, this application will be given priority for printing. See M.P.E.P. § 1309.

Any inquiry regarding this decision should be directed to Hien H. Phan, Special Program Examiner, at (571) 272-1606.

Henry Phan

Hien H. Phan, Special Program Examiner
Technology Center 2800 - Semiconductors,
Electrical & Optical Systems & Components

UNITED STATES PATENT AND TRADEMARK OFFICE

Commissioner for Patents
United States Patent and Trademark Office
P.O. Box 1450
Alexandria, VA 22313-1450
www.uspto.gov

TREXLER, BUSHNELL, GIANGIORGI,
BLACKSTONE & MARR, LTD.
105 W. ADAMS STREET
CHICAGO IL 60603

SEP - 8 2005

In re Application of:	:	
ROMITA et al.	:	
Application No. 10/974,344	:	DECISION ON PETITION
Filed: 10/974,344	:	TO MAKE SPECIAL
Attorney Docket No. 464/41449/16	:	

This is a decision on the petition under 37 C.F.R. § 1.102, filed August 1, 2005, to make the above-identified application special.

Petitioner requests that the above-identified application be made special under the accelerated examination procedure set forth in the Manual of Patent Examining Procedure (M.P.E.P.), Section 708.02, Item II. INFRINGEMENT

Subject to a requirement for a further showing as may be necessitated by the facts of a particular case, an application may be made special because of actual infringement (but not for prospective infringement) upon payment of the fee under 37 CFR 1.17(h) and the filing of a petition accompanied by a statement by the applicant, assignee, or an attorney/agent registered to practice before the Office alleging:

(A) That there is an infringing device or product actually on the market or method in use;

(B) That a rigid comparison of the alleged infringing device, product, or method with the claims of the application has been made, and that, in his or her opinion, some of the claims are unquestionably infringed; and

(C) That he or she has made or caused to be made a careful and thorough search of the prior art or has a good knowledge of the pertinent prior art.

(D) Applicant must provide one copy of each of the references deemed most closely related to the subject matter encompassed by the claims if said references are not already of record.

The petition contains the petition fee and a statement in accordance with M.P.E.P., Section 708.02, Item II.

For the above stated reasons, the petition is GRANTED.

The application is being forwarded to the examiner for expedited prosecution.

If the examiner can make this application special without prejudice to any possible interfering applications, and he/she should make a rigid search for such, he/she is authorized to do so for the next action. Should the application be rejected, the application will not be considered special for the subsequent action unless the applicant promptly makes a bona fide effort to place the application in condition for allowance, even if it is necessary to have an interview with the examiner to accomplish this purpose.

If the examiner finds any interfering application for the same subject matter, he/she should consider such application simultaneously with this application and should state in the official letter of such application that she/he is taking it out of its turn because of possible interference.

Should an appeal be taken in this application or should this application becomes involved in an interference, consideration of the appeal and the interference will be expedited by all Patent and Trademark Office officials concerned, contingent likewise upon diligent prosecution by the applicant.

After allowance, this application will be given priority for printing. See M.P.E.P. Section 1309.

Inquiries regarding this decision should be directed to Jose' G. Dees at (571) 272-1569.

for Jose' G. Dees, Special Programs Examiner
Technology Center 2800
Semiconductors, Electrical and Optical
Systems and Components

UNITED STATES PATENT AND TRADEMARK OFFICE

Commissioner for Patents
United States Patent and Trademark Office
P.O. Box 1450
Alexandria, VA 22313-1450
www.uspto.gov

REINHART BOERNER VAN DEUREN P.C.
2215 PERRYGREEN WAY
ROCKFORD IL 61107

In re Application of:
Ashworth, Nicholas
Serial No.: 10/974,353
Filed: Oct. 27, 2004
Docket: 502571
Title: THERMOSTATIC CONTROLLER WITH DECORATIVE FACEPLATE

DECISION ON PETITION

This is a decision on the petition filed on Nov. 9, 2007 by which petitioner requests reconsideration and withdrawal of the restriction requirement by constructive election in the Final Office action mailed Jul. 10, 2007 and that non-elected claims 1-10 and 19-21 be rejoined and examined on the merits. Claims 11-18 and 22-29 were constructively elected and examined. This petition is being considered pursuant to 37 CFR § 1.144 and 37 CFR § 1.181, and no fee is required.

The petition is granted.

A review of the record reveals that a restriction requirement by constructive election in the Final Office action was issued Jul. 10, 2007. The applicant filed reconsideration in his amendment after final on Aug.31, 207. The examiner repeated the restriction requirement in the Advisory Action of Oct. 17, 2007. On Nov. 9, 2007, the current petition was filed requesting the non-elected claims 1-10 and 19-21 be rejoined because the examiner has not established that the claimed inventions as amended on Apr. 30, 2007 are independent and distinct.

In judging the propriety of the restriction requirement, the related inventions, as claimed, must be shown to be distinct. See MPEP 802.01. The inventions can be shown to be distinct if both of the following can be shown: that the combination as claimed in claims 1-10 and 19-21: (A) does not require the particulars of the subcombination as claimed in claims 11-18 and 22-29 for patentability (to show novelty and unobviousness) and (B) the subcombination as claimed in claims 11-18 and 22-29 can be shown to have utility either by itself or in another materially different combination. See MPEP 806.05(c)[1].

[1] MPEP 806.05(c) [R-5] Criteria of Distinctness Between Combination and Subcombination: To support a requirement for restriction between combination and subcombination inventions, both two-way distinctness and reasons for insisting on restriction are necessary, i.e., there would be a *>serious< search burden >if restriction were not required< as evidenced by separate classification, status, or field of search. See MPEP §808.02. The inventions are distinct if it can be shown that a combination as claimed: (A) does not require the particulars of the subcombination as claimed for patentability (to show novelty and unobviousness), and (B) the subcombination can be shown to have utility either by itself or in another materially different combination. When these factors cannot be shown, such inventions are not distinct.

The record also reveals that the restriction requirement issued on Jul. 10, 2007 and repeated in the Advisory Action of Oct. 17, 2007 failed to explain exactly which limitations, if any, in the subcombination claims 11 and 22 that the combination claims 1 and 19 do not require. Moreover, there is no explanation as to why the subcombination claims 11 and 22 have utility either by itself or in another materially different combination. Without showing such two-way distinctness, the restriction based on the combination and subcombination cannot stand.

In finding petitioner's points of argument persuasive, the requested relief is granted. The restriction requirement of Jul. 10, 2007 is hereby withdrawn. Claims 1-10 and 19-21 will be rejoined with the elected invention as claimed in claims 11-18 and 22-29. The examiner has been directed to issue a supplemental Office action to treat claims 11-18 and 22-29 on the merits as soon as possible.

Petitioner has commented that the claims cannot be restricted because they are amended original claims and this would be contrary to MPEP 821.03. In fact, they became newly added claims with the same numbering by the amendments made to define a different invention, a combination instead of a subcombination. Within MPEP 821.03 is cited the controlling regulation, 37 CFR § 1.145. There is nothing in the regulation that prohibits the presentation of a different invention by amendment of original claims. Moreover, MPEP 821.03 does not conflict with this observation. In spite of this, however, and as noted previously, there has been no two-way distinctness shown to permit the restriction requirement to stand.

Conclusion

Based on the analysis of the record, the restriction requirement promulgated in the Office communication dated Jul. 10, 2007 is withdrawn. Non-elected claims 11-18 and 22-29 will be examined in a supplemental Office action. The relief requested in the petition is granted.

The application is being forwarded to the Supervisory Patent Examiner of Art Unit 3781 for further consideration of the amended claims 1-10 and 19-21 in a Supplemental Office action. Any inquiry regarding this decision should be directed to Henry C. Yuen, Special Programs Examiner, at (571) 272-4856.

PETITION GRANTED.

Karen M. Young

for Frederick R. Schmidt, Director
Technology Center 3700

UNITED STATES PATENT AND TRADEMARK OFFICE

UNITED STATES DEPARTMENT OF COMMERCE
United States Patent and Trademark Office
Address: COMMISSIONER FOR PATENTS
P.O. Box 1450
Alexandria, Virginia 22313-1450
www.uspto.gov

DAVIS WRIGHT TREMAINE LLP - SANDISK CORPORATION
505 MONTGOMERY STREET
SUITE 800
SAN FRANCISCO, CA 94111

Mail Date: 05/04/2010

Applicant	: Daniel L. Auclair	: DECISION ON REQUEST FOR
Patent Number	: 7616484	: RECALCULATION of PATENT
Issue Date	: 11/10/2009	: TERM ADJUSTMENT IN VIEW
Application No	: 10/974,366	: OF WYETH AND NOTICE OF INTENT TO
Filed	: 10/26/2004	: ISSUE CERTIFICATE OF CORRECTION
		:

The Request for Recalculation is **GRANTED** to the extent indicated.

The patent term adjustment has been determined to be **517** days. The USPTO will *sua sponte* issue a certificate of correction reflecting the amount of PTA days determined by the recalculation.

Prior to the issuance of the certificate of correction, the USPTO will afford patentee an opportunity to be heard and request reconsideration. Accordingly, patentee has **one month or thirty (30) days**, whichever is longer, to file a request for reconsideration of this patent term adjustment calculation. See 35 U.S.C. 154(b)(3)(B)(ii) and 37 CFR 1.322(a)(4). No extensions of time will be granted under 37 CFR 1.136.

Patentee should use document code PET.OP if electronically filing a request for reconsideration of this patent term adjustment calculation. The patentee must also include the information required by 37 CFR 1.705(b)(2) and the fee required by 37 CFR 1.18(e). If patentee does not file a timely request for reconsideration of this patent term adjustment calculation including the information required by 37 CFR 1.705(b)(2) and the fee required by 37 CFR 1.18(e), the USPTO will issue a certificate of correction reflecting the PTA determination noted above.

Patentee should be aware that in order to preserve the right to review in the United States District Court for the District of Columbia of the USPTO patent term adjustment determination, patentee must ensure that he or she also take the steps required under 35 U.S.C. 154(b)(4)(A) in a timely manner. Nothing in the request for recalculation should be construed as providing an alternative time frame for commencing a civil action under 35 U.S.C. 154(b)(4)(A).

Any questions concerning this decision should be directed to the Office of Patent Legal Administration at 571-272-7702.

SPE RESPONSE FOR CERTIFICATE OF CORRECTION

Paper No.: X

DATE : September 20,2007

TO SPE OF : ART UNIT 3753

SUBJECT : Request for Certificate of Correction for Appl. No.: 10/974,373 Patent No.: 7235178 B2

A response is requested with respect to a request for a certificate of correction.

With respect to the change(s) requested to correct Office and/or Applicant's errors, should the patent read as shown in the certificate of correction attached herewith or the COCIN document(s), in IFW images for the above-identified patented application? No new matter should be introduced, nor should the scope or meaning of the claims be changed.

If the response is for an IFW, within 7 days, please complete and forward the response, to the employee (named below) via scanning into application images, using document code **COCX**.

DO NOT SENT TO ATTORNEY

If the response is for a paper file wrapper, please complete the response and forward the response with the paper file wrapper, to the employee (named below), within 7 days, to:

Certificates of Correction Branch (CofC)
South Tower - 9A22
Palm Location 7580

LAMONTE NEWSOME
Certificates of Correction Branch
703-308-9390 ext. 112

Thank You For Your Assistance

The request for issuing the above-identified correction(s) is hereby:

Note your decision on the appropriate box.

- ☑ **Approved** — **All** changes apply.
- ☐ **Approved in Part** — Specify below which changes **do not** apply.
- ☐ **Denied** — State the reasons for denial below.

Comments: OK

DUANE SMITH
SUPERVISORY PATENT EXAMINER

SPE

1724
Art Unit

UNITED STATES PATENT AND TRADEMARK OFFICE

COMMISSIONER FOR PATENTS
UNITED STATES PATENT AND TRADEMARK OFFICE
P.O. BOX 1450
ALEXANDRIA, VA 22313-1450
WWW.USPTO.GOV

COPY MAILED

NOV 03 2009

OFFICE OF PETITIONS

Paper No.

FISH & RICHARDSON P.C.
PO BOX 1022
MINNEAPOLIS MN 55440-1022

In re Application of	:	
Harry K. Kraklow and Cynthia R.	:	DECISION ON PETITION
Kandler	:	PURSUANT TO
Application No. 10/974,379	:	37 C.F.R. § 1.183
Filed: October 27, 2004	:	
Attorney Docket No. 18538-	:	
007001	:	
Title: FROZEN MICROWAVEABLE	:	
BAKERY PRODUCTS	:	

This is in response to the petition filed pursuant to 37 C.F.R. § 1.183 on September 18, 2009. Petitioner has requested the waiver of the requirement present in 37 C.F.R. § 1.131 that each inventor sign the declaration of prior inventorship.[1]

This petition pursuant to 37 C.F.R. § 1.183 is **DISMISSED.**

Receipt of the petition fee is acknowledged.

BACKGROUND

The above-identified application was filed on October 27, 2004. On March 4, 2005, the Office received a 37 C.F.R. § 1.63 declaration that has been signed by both of the joint inventors. On December 18, 2008, a final Office action was mailed. As part of the response to this Office communication, Applicants filed a "DECLARATION OF DONALD J. JOHNSON UNDER 37 C.F.R. § 1.131," so as to attempt to overcome certain rejections contained therein. Neither joint inventor has executed this Rule 1.131 declaration

1 A petition pursuant to 37 C.F.R. § 1.47 is only applicable to an original oath or declaration pursuant to 37 C.F.R. § 1.63.

(the declaration was instead executed by a corporate officer of the Assignee of record).

Petitioner has filed this petition, seeking the acceptance of the Rule 1.131 declaration without the signature of either joint inventor. Petitioner has indicated that the first-named inventor has refused to execute the Rule 1.131 declaration, and the second-named inventor cannot be located.[2]

RELEVANT REGULATIONS AND PORTION OF THE MPEP

37 C.F.R. § 1.183 sets forth, *in toto*:

> In an extraordinary situation, when justice requires, any requirement of the regulations in this part which is not a requirement of the statutes may be suspended or waived by the Director or the Director's designee, sua sponte, or on petition of the interested party, subject to such other requirements as may be imposed. Any petition under this section must be accompanied by the petition fee set forth in § 1.17(f).

37 C.F.R. § 1.131(a) sets forth, *in pertinent part*:

> When any claim of an application or a patent under reexamination is rejected, the inventor of the subject matter of the rejected claim, the owner of the patent under reexamination, or the party qualified under §§ 1.42, 1.43, or 1.47, may submit an appropriate oath or declaration to establish invention of the subject matter of the rejected claim prior to the effective date of the reference or activity on which the rejection is based.

In addition, MPEP § 715.04(I)(B) sets forth, *in toto*:

> An affidavit or declaration by less than all named inventors of an application is accepted where it is shown that less than all named inventors of an application invented the subject matter of the claim or claims under rejection. For example, one of two joint inventors is accepted where it is shown that one of the joint inventors is the sole inventor of the claim or claims under rejection.

ANALYSIS

Here, there has not been a party qualified under 37 C.F.R. §§ 1.42, 1.43, or 1.47. In addition, Petitioner does not contend that less than all of the named inventors of the application invented the subject matter of the claims under

---

2 See petition, page 2 and Rule 1.131 declaration, paragraph 5.

rejection. Accordingly, the proper parties to sign the revised Rule 1.131 declaration include all of the joint inventors. Petitioner has asserted that the present situation comprises an extraordinary situation, such that justice requires the waiver of the requirement that the Rule 1.131 declaration be executed by both joint inventors.[3] However, the record does not support this assertion.

Petitioner will note that although Rule 1.47(b) is not applicable to the current set of facts, it does involve a parallel set of circumstances - the refusal of an inventor to join in the Rule 1.131 declaration and the unavailability of an inventor.

Prior to submitting a renewed petition pursuant to Rule 1.183, Petitioner should:

1. Mail a complete copy of the application to Mr. Kraklow, and provide him with a reasonable period of time to respond.[4] Petitioner should note that any statement that pertains to the presentation should be made by one having firsthand knowledge of the event. Statements based on hearsay are not normally accepted.

2. Provide a copy of the search terms which were used when the attempt to locate Ms. Kandler was made, along with a copy of the results which were obtained.[5]

3. Provide proof of irreparable damage.[6] A statement that the filing is necessary to preserve the rights of the parties would be sufficient.

---

3 Petition, page 3, paragraph 11.
4 Both the statement found in paragraph 14 (page 4) of the petition and the mailings of May 6, 2009 and June 9, 2009 strongly suggest that a complete copy of the application was not included with the mailings that were sent to Mr. Kraklow. A refusal by an inventor to sign an oath or declaration when the inventor has not been presented with the application papers does not itself suggest that the inventor is refusing to join the application unless it is clear that the inventor understands exactly what he or she is being asked to sign and refuses to accept the application papers. It is reasonable to require that the inventors be presented with the application papers since such a procedure ensures that the inventor is apprised of the application to which the oath or declaration is directed. See In re Gray, 115 USPQ 80 (Comm'r Pat. 1956).
5 Without a copy of the search, it is not clear whether the search was sufficiently broad so as to provide a reasonable chance at locating this individual. Without a copy of the results, it cannot be determined if any alternate potentially successful leads were obtained.
6 See MPEP § 409.03(g).

4. Provide "a statement affirming that the documentary evidence of the chain of title from the original owner to the assignee was or concurrently is being submitted for recordation pursuant to § 3.11."[7]

5. Confirm that the last known addresses for these two non-singing inventors are the same addresses which appear on the USPS return-postcard receipts which were submitted concurrently with this petition (and labeled as Exhibits J and K).

CONCLUSION

The time period for filing a renewed petition is governed by 37 C.F.R. § 1.181(f). Therefore, if reconsideration of this decision is desired, any response to this decision must be submitted within **TWO MONTHS** from the mail date of this decision, and **extensions of time under 37 C.F.R. § 1.136(a) are not permitted.** The reply should include a cover letter entitled "Renewed Petition pursuant to 37 C.F.R. § 1.183." This is not a final agency action within the meaning of 5 U.S.C § 704.

Any subsequent filing pertaining to this matter should indicate that the attorney handling this matter is Paul Shanoski, and may be submitted by mail,[8] hand-delivery,[9] or facsimile.[10] Registered users of EFS-Web may alternatively submit a response to this decision via EFS-Web.[11]

If responding by mail, Petitioner is advised not to place the undersigned's name on the envelope. Only the information that appears in the footnote should be included - adding anything else to the address will delay the delivery of the response to the undersigned.

The general phone number for the Office of Petitions that should be used for status requests is (571) 272-3282. Telephone

---

7 Rule 3.73(b)(1)(i). See also 37 C.F.R. §§ 3.73(b)(1)(ii), 3.73(b)(2) and 3.73(c).
8 Mail Stop Petition, Commissioner for Patents, United States Patent and Trademark Office, P.O. Box 1450, Alexandria, VA, 22313-1450.
9 Customer Window, Randolph Building, 401 Dulaney Street, Alexandria, VA, 22314.
10 (571) 273-8300- please note this is a central facsimile number.
11 https://sportal.uspto.gov/authenticate/authenticateuserlocalepf.html

inquiries regarding this decision should be directed to the undersigned at (571) 272-3225.[12] All other inquiries concerning examination procedures or status of the application should be directed to the Technology Center.

/Paul Shanoski/
Paul Shanoski
Senior Attorney
Office of Petitions

12 Petitioner will note that all practice before the Office should be in writing, and the action of the Office will be based exclusively on the written record in the Office. See 37 C.F.R. § 1.2. As such, Petitioner is reminded that no telephone discussion may be controlling or considered authority for any of Petitioner's further action(s).

UNITED STATES PATENT AND TRADEMARK OFFICE

COMMISSIONER FOR PATENTS
UNITED STATES PATENT AND TRADEMARK OFFICE
P.O. BOX 1450
ALEXANDRIA, VA 22313-1450
WWW.USPTO.GOV

Paper No.

FISH & RICHARDSON P.C.
PO BOX 1022
MINNEAPOLIS MN 55440-1022

COPY MAILED
FEB 01 2010

In re Application of	:	
Harry K. Kraklow and Cynthia R.	:	DECISION ON RENEWED
Kandler	:	PETITION PURSUANT TO
Application No. 10/974,379	:	37 C.F.R. § 1.183
Filed: October 27, 2004	:	
Attorney Docket No. 18538-	:	
007001	:	
Title: FROZEN MICROWAVEABLE	:	
BAKERY PRODUCTS	:	

This is in response to the renewed petition filed pursuant to 37 C.F.R. § 1.183 on December 31, 2009. Petitioner has requested the waiver of the requirement present in 37 C.F.R. § 1.131 that each inventor sign the declaration of prior inventorship.[1]

This renewed petition pursuant to 37 C.F.R. § 1.183 is **GRANTED**.

BACKGROUND

The above-identified application was filed on October 27, 2004. On March 4, 2005, the Office received a 37 C.F.R. § 1.63 declaration that has been signed by both of the joint inventors. On December 18, 2008, a final Office action was mailed. As part of the response to this Office communication, Applicants filed a "DECLARATION OF DONALD J. JOHNSON UNDER 37 C.F.R. § 1.131," so as to attempt to overcome certain rejections contained therein. Neither joint inventor has executed this Rule 1.131 declaration (the declaration was instead executed by a corporate officer of the Assignee of record).

1 A petition pursuant to 37 C.F.R. § 1.47 is only applicable to an original oath or declaration pursuant to 37 C.F.R. § 1.63.

Petitioner has filed this petition, seeking the acceptance of the Rule 1.131 declaration without the signature of either joint inventor. Petitioner has indicated that the first-named inventor has refused to execute the Rule 1.131 declaration, and the second-named inventor cannot be located.[2]

RELEVANT REGULATIONS AND PORTION OF THE MPEP

37 C.F.R. § 1.183 sets forth, *in toto*:

> In an extraordinary situation, when justice requires, any requirement of the regulations in this part which is not a requirement of the statutes may be suspended or waived by the Director or the Director's designee, sua sponte, or on petition of the interested party, subject to such other requirements as may be imposed. Any petition under this section must be accompanied by the petition fee set forth in § 1.17(f).

37 C.F.R. § 1.131(a) sets forth, *in pertinent part*:

> When any claim of an application or a patent under reexamination is rejected, the inventor of the subject matter of the rejected claim, the owner of the patent under reexamination, or the party qualified under §§ 1.42, 1.43, or 1.47, may submit an appropriate oath or declaration to establish invention of the subject matter of the rejected claim prior to the effective date of the reference or activity on which the rejection is based.

In addition, MPEP § 715.04(I)(B) sets forth, *in toto*:

> An affidavit or declaration by less than all named inventors of an application is accepted where it is shown that less than all named inventors of an application invented the subject matter of the claim or claims under rejection. For example, one of two joint inventors is accepted where it is shown that one of the joint inventors is the sole inventor of the claim or claims under rejection.

PROCEDURAL HISTORY AND ANALYSIS

An original petition pursuant to 37 C.F.R. § 1.183 was filed on September 18, 2009, along with, *inter alia*, the petition fee. The original petition was dismissed via the mailing of a decision on November 3, 2009.

With this renewed petition, Petitioner has included a statement of the last known address of each non-signing inventor,[3] proof

---

2 See petition, page 2 and Rule 1.131 declaration, paragraph 5.
3 Renewed petition, paragraph 24.

that a copy of the application was sent to Mr. Kraklow,[4] proof that diligent efforts have been made to locate Ms. Kandler,[5] proof that the Assignee the has sufficient proprietary interest in the subject matter to justify the filing of the application coupled with an establishment of the Assignee's right to take action,[6] and proof of irreparable damage.[7]

The renewed petition is granted to the extent that the Rule 1.131 declaration of September 18, 2009 may be entered, despite the fact that the requirement that all of the inventors sign the declaration has not been satisfied - the declaration was executed by a corporate officer of the Assignee.

This is not a decision on the merits of the declaration.

The Technology Center will be notified of this decision. It is noted that the Examiner has mailed an Office action which did not consider this Rule 1.131 declaration, prior to the entry of the same (see page 5 of the non-final Office action, dated November 23, 2009).

Telephone inquiries regarding *this decision* should be directed to the undersigned at (571) 272-3225.[8] All other inquiries concerning examination procedures or status of the application should be directed to the Technology Center.

/Paul Shanoski/
Paul Shanoski
Senior Attorney
Office of Petitions/

---

4 Renewed petition, paragraph 24.
5 Renewed petition, paragraph 25.
6 Exhibit A submitted with both the original petition and the renewed petition.
7 Renewed petition, paragraph 29.
8 Petitioner will note that all practice before the Office should be in writing, and the action of the Office will be based exclusively on the written record in the Office. See 37 C.F.R. § 1.2. As such, Petitioner is reminded that no telephone discussion may be controlling or considered authority for Petitioner's further action(s).

UNITED STATES PATENT AND TRADEMARK OFFICE

Commissioner for Patents
United States Patent and Trademark Office
P.O. Box 1450
Alexandria, VA 22313-1450
www.uspto.gov

FISH & RICHARDSON P.C.
PO Box 1022
Minneapolis, MN 55440-1022

MAILED

MAY 24 2010

OFFICE OF PETITIONS

In re Application of	:	
Harry K. Karklow, et al.	:	
Application No. 10/974,379	:	DECISION ON PETITION
Filed: October 27, 2004	:	TO WITHDRAW
Attorney Docket No. 18538-007001	:	FROM RECORD
	:	

This is a decision on the Request to Withdraw as attorney or agent of record under 37 C.F.R. § 1.36(b), filed April 6, 2010.

The request is **APPROVED**.

A grantable request to withdraw as attorney/agent of record must be signed by every attorney/agent seeking to withdraw or contain a clear indication that one attorney is signing on behalf of another/others. A request to withdraw will not be approved unless at least 30 (thirty) days would remain between the date of approval and the later of the expiration date of a time to file a response or the expiration date of the maximum time period which can be extended under 37 C.F.R. § 1.136(a).

The request was signed by Teresa A. Lavoie on behalf of all attorneys of record. All attorneys/agents have been withdrawn. Applicant is reminded that there is no attorney of record at this time.

The correspondence address of record has been changed and the new correspondence address is the address indicated below.

There is an outstanding Office action mailed May 17, 2010 that requires a reply from the applicant.

Telephone inquiries concerning this decision should be directed to Terri Johnson at 571-272-2991.

Terri Johnson
Petitions Examiner
Office of Petitions

cc: **First Products, Inc.**
2626 East 82nd Street
Bloomington, MN 55425

UNITED STATES PATENT AND TRADEMARK OFFICE

UNITED STATES DEPARTMENT OF COMMERCE
United States Patent and Trademark Office
Address: COMMISSIONER FOR PATENTS
P.O. Box 1450
Alexandria, Virginia 22313-1450
www.uspto.gov

APPLICATION NUMBER	FILING OR 371(C) DATE	FIRST NAMED APPLICANT	ATTY. DOCKET NO./TITLE
10/974,379	10/27/2004	Harry K. Kraklow	18538-007001

CONFIRMATION NO. 3538

POWER OF ATTORNEY NOTICE

26191
FISH & RICHARDSON P.C.
PO BOX 1022
MINNEAPOLIS, MN 55440-1022

OC000000041753329

Date Mailed: 05/24/2010

NOTICE REGARDING CHANGE OF POWER OF ATTORNEY

This is in response to the Power of Attorney filed 04/06/2010.

- The withdrawal as attorney in this application has been accepted. Future correspondence will be mailed to the new address of record. 37 CFR 1.33.

/tsjohnson/

Office of Data Management, Application Assistance Unit (571) 272-4000, or (571) 272-4200, or 1-888-786-0101

UNITED STATES PATENT AND TRADEMARK OFFICE

Commissioner for Patents
United States Patent and Trademark Office
P.O. Box 1450
Alexandria, VA 22313-1450
www.uspto.gov

SWANSON & BRATSCHUN, L.L.C.
8210 SOUTHPARK TERRACE
LITTLETON CO 80120

COPY MAILED

JUL 01 2008

OFFICE OF PETITIONS

In re Application of	:	
ZELINSKY	:	
Application No. 10/974,383	:	NOTICE
Filed: 10/26/2004	:	
Attorney Docket No. APP.01	:	

This is a Notice regarding your request for acceptance of a fee deficiency submission under 37 CFR 1.28, filed May 2, 2008.

The Office no longer investigates or rejects original or reissue applications under 37 CFR 1.56. **1098 Off. Gaz. Pat. Office 502 (January 3, 1989)**. Therefore, nothing in this Notice is intended to imply that an investigation was done.

Your fee deficiency submission under 37 CFR 1.28 is hereby **ACCEPTED**.

This application is no longer entitled to small entity status. Accordingly, all future fees paid in this application must be paid at the large entity rate.

The fee deficiency of $930.00 will be charged to the Deposit Account as requested.

This application is being referred to the Office of Data Management.

Inquiries related to this communication should be directed to the undersigned at (571) 272-3211.

Christina Tartera Donnell

Christina Tartera Donnell
Senior Petitions Attorney
Office of Petitions

Pet. Dec.

UNITED STATES PATENT AND TRADEMARK OFFICE

Commissioner for Patents
United States Patent and Trademark Office
P.O. Box 1450
Alexandria, VA 22313-1450
www.uspto.gov

FEB 7 2005

In re Application of	:	
MURCIA.	:	
Serial Number: 10/974,409	:	PETITION UNDER
Filed: October 27, 2004	:	M.P.E.P.708.02 V
For: ORGANICALLY CLEAN BIOMASS FUEL	:	AND VI

This is in response to the petition filed October 27, 2004, requesting that the above-identified application be granted Special Status under Sections 708.02 V and VI of the MPEP and 37 CFR 1.102(c) (**no fee required**).

The request for Special Status considered under Sections 708.02 V and VI is granted because criteria under 37 CFR 1.102(c) has been met.

The petition is **GRANTED.**

R Crispino

Richard Crispino, Special Programs Examiner
Technology Center 1700
Chemical and Materials Engineering

Gibbons, Del Deo, Dolan, Griffinger & Vecchione
1 Riverfront Plaza
Newark, NJ 07102-5497

UNITED STATES PATENT AND TRADEMARK OFFICE

Commissioner for Patents
United States Patent and Trademark Office
P.O. Box 1450
Alexandria, VA 22313-1450
www.uspto.gov

CHEVRON PHILLIPS CHEMICAL COMPANY LP
LAW DEPARTMENT - IP
P.O BOX 4910
THE WOODLANDS TX 77387-4910

COPY MAILED

MAR 1 3 2007

OFFICE OF PETITIONS

In re Application of	:
Hartsock et al.	:
Application No. 10/974,411	: DECISION ON PETITION
Filed: 27 October, 2004	: UNDER 37 CFR 1.78(a)(3)
Attorney Docket No. 210596US	:

This is a decision on the petition under 37 CFR 1.78(a)(3), filed 16 January, 2007, to accept an unintentionally delayed claim under 35 U.S.C. § 120 for the benefit of priority to the prior-filed nonprovisional application set forth in the amendment filed with the petition.

The petition is **GRANTED**.

A petition for acceptance of a claim for late priority under 37 CFR 1.78(a)(3) is only applicable to those applications filed on or after November 29, 2000. Further, the petition is appropriate only after the expiration of the period specified in 37 CFR 1.78(a)(2)(ii). In addition, the petition under 37 CFR 1.78(a)(3) must be accompanied by:

(1) the reference required by 35 U.S.C. § 120 and 37 CFR 1.78(a)(2)(i) of the prior-filed application, unless previously submitted;
(2) the surcharge set forth in § 1.17(t); and
(3) a statement that the entire delay between the date the claim was due under 37 CFR 1.78(a)(2)(ii) and the date the claim was filed was unintentional. The Director may require additional information where there is a question whether the delay was unintentional.

All of the above requirements having been satisfied, the late claim for priority under 35 U.S.C. § 120 is accepted as being unintentionally delayed.

The granting of the petition to accept the delayed benefit claim to the prior-filed application under 37 CFR 1.78(a)(3) should not be construed as meaning that this application is entitled

to the benefit of the prior-filed application. In order for this application to be entitled to the benefit of the prior-filed application, all other requirements under 35 U.S.C. § 120 and 37 CFR 1.78(a)(1) and (a)(2) must be met. Similarly, the fact that the corrected Filing Receipt accompanying this decision on petition includes the prior-filed application should not be construed as meaning that applicant is entitled to the claim for benefit of priority to the prior-filed application noted thereon. Accordingly, the examiner will, in due course, consider this benefit claim and determine whether the application is entitled to the benefit of the earlier filing date.

A corrected Filing Receipt, which includes the priority claim to the prior-filed nonprovisional application, accompanies this decision on petition.

Any inquiries concerning this decision may be directed to Senior Petitions Attorney Douglas I. Wood at (571) 272-3231. All other inquiries concerning either the examination procedures or status of the application should be directed to the Technology Center.

This application is being forwarded to Technology Center Art Unit 1711 for consideration by the examiner of applicant's entitlement to claim benefit of priority under 35 U.S.C. § 120 to the prior-filed application.

Christina Tartera Donnell

Christina Tartera Donnell
Senior Petitions Attorney
Office of Petitions

ATTACHMENT: Corrected Filing Receipt

UNITED STATES PATENT AND TRADEMARK OFFICE

UNITED STATES DEPARTMENT OF COMMERCE
United States Patent and Trademark Office
Address: COMMISSIONER FOR PATENTS
P.O. Box 1450
Alexandria, Virginia 22313-1450
www.uspto.gov

APPL NO.	FILING OR 371(c) DATE	ART UNIT	FIL FEE REC'D	ATTY.DOCKET NO	TOT CLMS	IND CLMS
10/974,411	10/27/2004	1711	1342	210596US	36	6

CONFIRMATION NO. 5402

CORRECTED FILING RECEIPT

OC000000022874639

32223
CHEVRON PHILLIPS CHEMICAL COMPANY LP
LAW DEPARTMENT - IP
P.O BOX 4910
THE WOODLANDS, TX 77387-4910

Date Mailed: 03/13/2007

Receipt is acknowledged of this regular Patent Application. It will be considered in its order and you will be notified as to the results of the examination. Be sure to provide the U.S. APPLICATION NUMBER, FILING DATE, NAME OF APPLICANT, and TITLE OF INVENTION when inquiring about this application. Fees transmitted by check or draft are subject to collection. Please verify the accuracy of the data presented on this receipt. **If an error is noted on this Filing Receipt, please mail to the Commissioner for Patents P.O. Box 1450 Alexandria Va 22313-1450. Please provide a copy of this Filing Receipt with the changes noted thereon. If you received a "Notice to File Missing Parts" for this application, please submit any corrections to this Filing Receipt with your reply to the Notice. When the USPTO processes the reply to the Notice, the USPTO will generate another Filing Receipt incorporating the requested corrections (if appropriate).**

Applicant(s)

David L. Hartsock, Bartlesville, OK;
John M. Brown, Bartlesville, OK;
James A. Keane, The Woodlands, TX;

Assignment For Published Patent Application

Chevron Phillips Chemical Company, LP, The Woodlands, TX

Power of Attorney: The patent practitioners associated with Customer Number **32223**.

Domestic Priority data as claimed by applicant

This application is a CIP of 10/784,143 02/20/2004 PAT 7,193,014

Foreign Applications

If Required, Foreign Filing License Granted: 02/15/2005

The country code and number of your priority application, to be used for filing abroad under the Paris Convention, is
US10/974,411

Projected Publication Date: Not Applicable

Non-Publication Request: No

Early Publication Request: No

Title

Composition for monovinylrenic-based shrink label films

Preliminary Class

525

PROTECTING YOUR INVENTION OUTSIDE THE UNITED STATES

Since the rights granted by a U.S. patent extend only throughout the territory of the United States and have no effect in a foreign country, an inventor who wishes patent protection in another country must apply for a patent in a specific country or in regional patent offices. Applicants may wish to consider the filing of an international application under the Patent Cooperation Treaty (PCT). An international (PCT) application generally has the same effect as a regular national patent application in each PCT-member country. The PCT process **simplifies** the filing of patent applications on the same invention in member countries, but **does not result** in a grant of "an international patent" and does not eliminate the need of applicants to file additional documents and fees in countries where patent protection is desired.

Almost every country has its own patent law, and a person desiring a patent in a particular country must make an application for patent in that country in accordance with its particular laws. Since the laws of many countries differ in various respects from the patent law of the United States, applicants are advised to seek guidance from specific foreign countries to ensure that patent rights are not lost prematurely.

Applicants also are advised that in the case of inventions made in the United States, the Director of the USPTO must issue a license before applicants can apply for a patent in a foreign country. The filing of a U.S. patent application serves as a request for a foreign filing license. The application's filing receipt contains further information and guidance as to the status of applicant's license for foreign filing.

Applicants may wish to consult the USPTO booklet, "General Information Concerning Patents" (specifically, the section entitled "Treaties and Foreign Patents") for more information on timeframes and deadlines for filing foreign patent applications. The guide is available either by contacting the USPTO Contact Center at 800-786-9199, or it can be viewed on the USPTO website at http://www.uspto.gov/web/offices/pac/doc/general/index.html.

For information on preventing theft of your intellectual property (patents, trademarks and copyrights), you may wish to consult the U.S. Government website, http://www.stopfakes.gov. Part of a Department of Commerce initiative, this website includes self-help "toolkits" giving innovators guidance on how to protect intellectual property in specific countries such as China, Korea and Mexico. For questions regarding patent enforcement issues, applicants may call the U.S. Government hotline at 1-866-999-HALT (1-866-999-4158).

LICENSE FOR FOREIGN FILING UNDER
Title 35, United States Code, Section 184
Title 37, Code of Federal Regulations, 5.11 & 5.15

GRANTED

The applicant has been granted a license under 35 U.S.C. 184, if the phrase "IF REQUIRED, FOREIGN FILING LICENSE GRANTED" followed by a date appears on this form. Such licenses are issued in all applications where the conditions for issuance of a license have been met, regardless of whether or not a license may be required as set forth in 37 CFR 5.15. The scope and limitations of this license are set forth in 37 CFR 5.15(a) unless an earlier license has been issued under 37 CFR 5.15 (b). The license is subject to revocation upon written notification. The date indicated is the effective date of the license, unless an earlier license of similar scope has been granted under 37 CFR 5.13 or 5.14.

This license is to be retained by the licensee and may be used at any time on or after the effective date thereof unless it is revoked. This license is automatically transferred to any related applications(s) filed under 37 CFR 1.53(d). This license is not retroactive.

The grant of a license does not in any way lessen the responsibility of a licensee for the security of the subject matter as imposed by any Government contract or the provisions of existing laws relating to espionage and the national security or the export of technical data. Licensees should apprise themselves of current regulations especially with respect to certain countries, of other agencies, particularly the Office of Defense Trade Controls, Department of State (with respect to Arms, Munitions and Implements of War (22 CFR 121-128)); the Bureau of Industry and Security, Department of Commerce (15 CFR parts 730-774); the Office of Foreign Assets Control, Department of Treasury (31 CFR Parts 500+) and the Department of Energy.

NOT GRANTED

No license under 35 U.S.C. 184 has been granted at this time, if the phrase "IF REQUIRED, FOREIGN FILING LICENSE GRANTED" DOES NOT appear on this form. Applicant may still petition for a license under 37 CFR 5.12, if a license is desired before the expiration of 6 months from the filing date of the application. If 6 months has lapsed from the filing date of this application and the licensee has not received any indication of a secrecy order under 35 U.S.C. 181, the licensee may foreign file the application pursuant to 37 CFR 5.15(b).

UNITED STATES PATENT AND TRADEMARK OFFICE

Commissioner for Patents
United States Patent and Trademark Office
P.O. Box 1450
Alexandria, VA 22313-1450
www.uspto.gov

Basch & Nickerson, LLP
1777 Penfield Road
Penfield, NY 14526

COPY MAILED

JUL 3 1 2009

OFFICE OF PETITIONS

In re Application of	:	
Xingwu Wang et al.	:	
Application No. 10/974,412	:	DECISION ON PETITION
Filed: October 27, 2004	:	TO WITHDRAW
Attorney Docket No. 1008 072 301 0251	:	FROM RECORD
	:	

This is a decision on the Request to Withdraw as attorney or agent of record under 37 C.F.R. § 1.36(b), filed March 5, 2009.

The request is **moot because a revocation of power of attorney has been filed**.

A review of the file record indicates that the power of attorney to Basch & Nickerson, LLP, has been revoked by the assignee of the patent application on February 17, 2009. Accordingly, the request to withdraw under 37 C.F.R. § 1.36(b) is moot.

All future communications from the Office will continue to be directed to the below listed until otherwise notified by applicant.

Telephone inquires concerning this decision should be directed to Kimberly Inabinet at 571-272-4618.

Kimberly Inabinet
Petitions Examiner
Office of Petitions

cc: Biophan Technologies, Inc.
15 Schoen Place
Pittsford, NY 14534

UNITED STATES PATENT AND TRADEMARK OFFICE

Commissioner for Patents
United States Patent and Trademark Office
P.O. Box 1450
Alexandria, VA 22313-1450
www.uspto.gov

MAYER & WILLIAMS
251 NORTH AVENUE WEST
2ND FLOOR
WESTFIELD NJ 07090

COPY MAILED
DEC 2 2 2006
OFFICE OF PETITIONS

In re Application of	:
Tasch et al.	:
Application No. 10/974,420	: DECISION ON PETITION
Filed: 26 October, 2004	: UNDER 37 CFR 1.78(a)(3)
Attorney Docket No. 00139-005002	:

This is a decision on the petition under 37 CFR 1.78(a)(3), filed 3 July, 2006, to accept an unintentionally delayed claim under 35 U.S.C. § 120 for the benefit of priority to the prior-filed nonprovisional application set forth in the amendment filed on 13 October, 2006.

The petition is **GRANTED**.

A petition for acceptance of a claim for late priority under 37 CFR 1.78(a)(3) is only applicable to those applications filed on or after November 29, 2000. Further, the petition is appropriate only after the expiration of the period specified in 37 CFR 1.78(a)(2)(ii). In addition, the petition under 37 CFR 1.78(a)(3) must be accompanied by:

(1) the reference required by 35 U.S.C. § 120 and 37 CFR 1.78(a)(2)(i) of the prior-filed application, unless previously submitted;
(2) the surcharge set forth in § 1.17(t); and
(3) a statement that the entire delay between the date the claim was due under 37 CFR 1.78(a)(2)(ii) and the date the claim was filed was unintentional. The Director may require additional information where there is a question whether the delay was unintentional.

37 CFR § 1.78(a)(3) requires a statement that the entire delay between the date the claim was due under 37 CFR § 1.78(a)(2)(ii) and the date the claim was filed was unintentional. Since the statement appearing in the petition varies from the required language, the statement is being construed as the statement required by 37 CFR § 1.78(a)(3). If this is not a correct reading of the statement appearing in the petition, petitioner should promptly notify the Office.

All of the above requirements having been satisfied, the late claim for priority under 35 U.S.C. § 120 is accepted as being unintentionally delayed.

The granting of the petition to accept the delayed benefit claim to the prior-filed application under 37 CFR 1.78(a)(3) should not be construed as meaning that this application is entitled to the benefit of the prior-filed application. In order for this application to be entitled to the benefit of the prior-filed application, all other requirements under 35 U.S.C. § 120 and 37 CFR 1.78(a)(1) and (a)(2) must be met. Similarly, the fact that the corrected Filing Receipt accompanying this decision on petition includes the prior-filed application should not be construed as meaning that applicant is entitled to the claim for benefit of priority to the prior-filed application noted thereon. Accordingly, the examiner will, in due course, consider this benefit claim and determine whether the application is entitled to the benefit of the earlier filing date.

A corrected Filing Receipt, which includes the priority claim to the prior-filed nonprovisional application, accompanies this decision on petition.

Any inquiries concerning this decision may be directed to Senior Petitions Attorney Douglas I. Wood at (571) 272-3231. All other inquiries concerning either the examination procedures or status of the application should be directed to the Technology Center.

This application is being forwarded to Technology Center Art Unit 2811 for consideration by the examiner of applicant's entitlement to claim benefit of priority under 35 U.S.C. § 120 to the prior-filed application.

Christina Tartera Donnell

Senior Petitions Attorney
Office of Petitions

ATTACHMENT: Corrected Filing Receipt

UNITED STATES PATENT AND TRADEMARK OFFICE

UNITED STATES DEPARTMENT OF COMMERCE
United States Patent and Trademark Office
Address: COMMISSIONER FOR PATENTS
P.O. Box 1450
Alexandria, Virginia 22313-1450
www.uspto.gov

APPL NO.	FILING OR 371 (c) DATE	ART UNIT	FIL FEE REC'D	ATTY.DOCKET NO	DRAWINGS	TOT CLMS	IND CLMS
10/974,420	10/26/2004	2811	695	00139-005002	4	1	1

CONFIRMATION NO. 4205

CORRECTED FILING RECEIPT

OC000000020998869

27774
MAYER & WILLIAMS PC
251 NORTH AVENUE WEST
2ND FLOOR
WESTFIELD, NJ 07090

Date Mailed: 10/26/2006

Receipt is acknowledged of this regular Patent Application. It will be considered in its order and you will be notified as to the results of the examination. Be sure to provide the U.S. APPLICATION NUMBER, FILING DATE, NAME OF APPLICANT, and TITLE OF INVENTION when inquiring about this application. Fees transmitted by check or draft are subject to collection. Please verify the accuracy of the data presented on this receipt. **If an error is noted on this Filing Receipt, please mail to the Commissioner for Patents P.O. Box 1450 Alexandria Va 22313-1450. Please provide a copy of this Filing Receipt with the changes noted thereon. If you received a "Notice to File Missing Parts" for this application, please submit any corrections to this Filing Receipt with your reply to the Notice. When the USPTO processes the reply to the Notice, the USPTO will generate another Filing Receipt incorporating the requested corrections (if appropriate).**

Applicant(s)

Stefan Tasch, Jennersdorf, AUSTRIA;
Peter Pachler, Graz, AUSTRIA;
Gundula Roth, Levenhagen, GERMANY;
Walter Tews, Greifswald, GERMANY;
Wolfgang Kempfert, Bad Liebenstein, GERMANY;
Detlef Starick, Bad Liebenstein, GERMANY;

Power of Attorney:

Mark Wieczorek--37966

Domestic Priority data as claimed by applicant

This application is a CON of 10/250,435 12/22/2003 PAT 6,809,347
which is a 371 of PCT/AT01/00364 11/19/2001

Foreign Applications

AUSTRIA A 2154/2000 12/28/2000

If Required, Foreign Filing License Granted: 01/12/2005

The country code and number of your priority application, to be used for filing abroad under the Paris Convention, is
US10/974,420

Projected Publication Date: Not Applicable

Non-Publication Request: No

Early Publication Request: No

Title

LIGHT SOURCE WITH A LIGHT-EMITTING ELEMENT

Preliminary Class

257

PROTECTING YOUR INVENTION OUTSIDE THE UNITED STATES

Since the rights granted by a U.S. patent extend only throughout the territory of the United States and have no effect in a foreign country, an inventor who wishes patent protection in another country must apply for a patent in a specific country or in regional patent offices. Applicants may wish to consider the filing of an international application under the Patent Cooperation Treaty (PCT). An international (PCT) application generally has the same effect as a regular national patent application in each PCT-member country. The PCT process **simplifies** the filing of patent applications on the same invention in member countries, but **does not result** in a grant of "an international patent" and does not eliminate the need of applicants to file additional documents and fees in countries where patent protection is desired.

Almost every country has its own patent law, and a person desiring a patent in a particular country must make an application for patent in that country in accordance with its particular laws. Since the laws of many countries differ in various respects from the patent law of the United States, applicants are advised to seek guidance from specific foreign countries to ensure that patent rights are not lost prematurely.

Applicants also are advised that in the case of inventions made in the United States, the Director of the USPTO must issue a license before applicants can apply for a patent in a foreign country. The filing of a U.S. patent application serves as a request for a foreign filing license. The application's filing receipt contains further information and guidance as to the status of applicant's license for foreign filing.

Applicants may wish to consult the USPTO booklet, "General Information Concerning Patents" (specifically, the section entitled "Treaties and Foreign Patents") for more information on timeframes and deadlines for filing foreign patent applications. The guide is available either by contacting the USPTO Contact Center at 800-786-9199, or it can be viewed on the USPTO website at http://www.uspto.gov/web/offices/pac/doc/general/index.html.

For information on preventing theft of your intellectual property (patents, trademarks and copyrights), you may wish to consult the U.S. Government website, http://www.stopfakes.gov. Part of a Department of Commerce initiative, this website includes self-help "toolkits" giving innovators guidance on how to protect intellectual property in specific countries such as China, Korea and Mexico. For questions regarding patent enforcement issues, applicants may call the U.S. Government hotline at 1-866-999-HALT (1-866-999-4158).

LICENSE FOR FOREIGN FILING UNDER
Title 35, United States Code, Section 184
Title 37, Code of Federal Regulations, 5.11 & 5.15

GRANTED

The applicant has been granted a license under 35 U.S.C. 184, if the phrase "IF REQUIRED, FOREIGN FILING LICENSE GRANTED" followed by a date appears on this form. Such licenses are issued in all applications where the conditions for issuance of a license have been met, regardless of whether or not a license may be required as set forth in 37 CFR 5.15. The scope and limitations of this license are set forth in 37 CFR 5.15(a) unless an earlier license has been issued under 37 CFR 5.15 (b). The license is subject to revocation upon written notification. The date indicated is the effective date of the license, unless an earlier license of similar scope has been granted under 37 CFR 5.13 or 5.14.

This license is to be retained by the licensee and may be used at any time on or after the effective date thereof unless it is revoked. This license is automatically transferred to any related applications(s) filed under 37 CFR 1.53(d). This license is not retroactive.

The grant of a license does not in any way lessen the responsibility of a licensee for the security of the subject matter as imposed by any Government contract or the provisions of existing laws relating to espionage and the national security or the export of technical data. Licensees should apprise themselves of current regulations especially with respect to certain countries, of other agencies, particularly the Office of Defense Trade Controls, Department of State (with respect to Arms, Munitions and Implements

of War (22 CFR 121-128)); the Bureau of Industry and Security, Department of Commerce (15 CFR parts 730-774); the Office of Foreign Assets Control, Department of Treasury (31 CFR Parts 500+) and the Department of Energy.

NOT GRANTED

No license under 35 U.S.C. 184 has been granted at this time, if the phrase "IF REQUIRED, FOREIGN FILING LICENSE GRANTED" DOES NOT appear on this form. Applicant may still petition for a license under 37 CFR 5.12, if a license is desired before the expiration of 6 months from the filing date of the application. If 6 months has lapsed from the filing date of this application and the licensee has not received any indication of a secrecy order under 35 U.S.C. 181, the licensee may foreign file the application pursuant to 37 CFR 5.15(b).

UNITED STATES PATENT AND TRADEMARK OFFICE

UNITED STATES DEPARTMENT OF COMMERCE
United States Patent and Trademark Office
Address: COMMISSIONER FOR PATENTS
P.O. Box 1450
Alexandria, Virginia 22313-1450
www.uspto.gov

CHRISTENSEN, O'CONNOR, JOHNSON, KINDNESS, PLLC
1420 FIFTH AVENUE
SUITE 2800
SEATTLE, WA 98101-2347

Mail Date: 04/20/2010

Applicant	: Vidya Venkatachalam	: DECISION ON REQUEST FOR
Patent Number	: 7583852	: RECALCULATION of PATENT
Issue Date	: 09/01/2009	: TERM ADJUSTMENT IN VIEW
Appliction No	: 10/974,423	: OF WYETH AND NOTICE OF INTENT TO
Filed	: 10/26/2004	: ISSUE CERTIFICATE OF CORRECTION
		:

The Request for Recalculation is **GRANTED** to the extent indicated.

The patent term adjustment has been determined to be **1301** days. The USPTO will *sua sponte* issue a certificate of correction reflecting the amount of PTA days determined by the recalculation.

Prior to the issuance of the certificate of correction, the USPTO will afford patentee an opportunity to be heard and request reconsideration. Accordingly, patentee has **one month or thirty (30) days**, whichever is longer, to file a request for reconsideration of this patent term adjustment calculation. See 35 U.S.C. 154(b)(3)(B)(ii) and 37 CFR 1.322(a)(4). No extensions of time will be granted under 37 CFR 1.136.

Patentee should use document code PET.OP if electronically filing a request for reconsideration of this patent term adjustment calculation. The patentee must also include the information required by 37 CFR 1.705(b)(2) and the fee required by 37 CFR 1.18(e). If patentee does not file a timely request for reconsideration of this patent term adjustment calculation including the information required by 37 CFR 1.705(b)(2) and the fee required by 37 CFR 1.18(e), the USPTO will issue a certificate of correction reflecting the PTA determination noted above.

Patentee should be aware that in order to preserve the right to review in the United States District Court for the District of Columbia of the USPTO patent term adjustment determination, patentee must ensure that he or she also take the steps required under 35 U.S.C. 154(b)(4)(A) in a timely manner. Nothing in the request for recalculation should be construed as providing an alternative time frame for commencing a civil action under 35 U.S.C. 154(b)(4)(A).

Any questions concerning this decision should be directed to the Office of Patent Legal Administration at 571-272-7702.

UNITED STATES PATENT AND TRADEMARK OFFICE

Commissioner for Patents
United States Patent and Trademark Office
P.O. Box 1450
Alexandria, VA 22313-1450
www.uspto.gov

PERKINS COIE LLP
P.O. BOX 1208
SEATTLE WA 98111-1208

COPY MAILED
JAN 22 2010

In re Application of	:	
Sandeep Yadav et al	:	
Application No. 10/974,427	:	DECISION GRANTING PETITION
Filed: October 26, 2004	:	UNDER 37 CFR 1.313(c)(2)
Attorney Docket No. 67272-8057.US01	:	

This is a decision on the petition under 37 CFR 1.313(c)(2), filed January 20, 2010, to withdraw the above-identified application from issue after payment of the issue fee.

The petition is **GRANTED**.

The above-identified application is withdrawn from issue for consideration of a submission under 37 CFR 1.114 (request for continued examination). *See* 37 CFR 1.313(c)(2).

Petitioner is advised that the issue fee paid on December 17, 2009 cannot be refunded. If, however, this application is again allowed, petitioner may request that it be applied towards the issue fee required by the new Notice of Allowance.[1]

Telephone inquiries should be directed to the undersigned at (571) 272-3208.

This application is being referred to Technology Center AU 2454 for processing of the request for continued examination under 37 CFR 1.114 and for consideration of the concurrently filed IDS.

/Karen Creasy/
Karen Creasy
Petitions Examiner
Office of Petitions

---

[1] *The request to apply the issue fee to the new Notice may be satisfied by completing and returning the new Part B – Fee(s) Transmittal Form (along with any balance due at the time of submission). Petitioner is advised that the Issue Fee Transmittal Form must be completed and timely submitted to avoid abandonment of the application.*

IN THE UNITED STATES PATENT AND TRADEMARK OFFICE

In re Patent Application of:
Yadav et al.

Application No.: 10/974,427 Confirmation No.: 4204

Filed: October 26, 2004 Art Unit: 2441

For: METHOD AND APPARATUS TO EFFICIENTLY TRANSMIT STREAMING MEDIA Examiner: C. R. Patel

Mail Stop 313(c)
Commissioner for Patents
P.O. Box 1450
Alexandria, VA 22313-1450

PETITION UNDER 37 C.F.R. 1.313(c)(2) TO WITHDRAW APPLICATION FROM ISSUE

Sir:

Applicants hereby request that the present application be withdrawn from issue under 37 C.F.R. 1.313(c)(2). Withdrawal from issue is necessary so that a request for continued examination (RCE) under 37 C.F.R. 1.114 (enclosed herewith) can be considered by the Office. The RCE is being submitted to allow consideration of an Information Disclosure Statement (IDS) (also enclosed herewith).

Please charge the required petition fee under 37 C.F.R. 1.17(h) and any other required charges to Deposit Account No. 50-2207 under order no. 67272-8057.US01.

Dated: January 20, 2010

Respectfully submitted,

By

Jordan M. Becker
Registration No.: 39,602
PERKINS COIE LLP
P.O. Box 1208
Seattle, Washington 98111-1208
(650) 838-4300
(650) 838-4350 (Fax)
Attorney for Applicant

01/25/2010 LDIEP1 00000001 502207 10974427
01 FC:1464 130.00 DA

UNITED STATES PATENT AND TRADEMARK OFFICE

COMMISSIONER FOR PATENTS
UNITED STATES PATENT AND TRADEMARK OFFICE
P.O. BOX 1450
ALEXANDRIA, VA 22313-1450
www.uspto.gov

COPY MAILED

MAY 01 2007

OFFICE OF PETITIONS

JOHN M. DEL VECCHIO
HODGSON RUSS LLP
SUITE 2000
ONE M&T PLAZA
BUFFALO, NY 14203-2391

In re Application of James G. Streicher Application No. 10/974,431 Filed: October 27, 2004 Attorney Docket No. 36786.0002	: : : : :	ON PETITION

This is a decision on the petition under 37 CFR 1.137(b) to revive the above-identified application, filed December 26, 2006.

The petition is **GRANTED**.

The application became abandoned for failure to pay the issue fee on or before December13, 2006. On December 26, 2006, the present petition was filed. A Notice of Abandonment was subsequently mailed on January 12, 2007.

The petition satisfies the requirements of 37 CFR 1.137(b) in that petitioner has supplied (1) the reply in the form of the requisite issue/publication fee; (2) the petition fee of $750; and (3) an adequate statement of unintentional delay.

The application is being referred to the Office of Publications to be processed into a patent.

Telephone inquires related to this decision should be directed to the undersigned at (571) 272-3204. Telephone inquiries related to processing at Publishing Division should be directed to (571) 272-4200.

Sherry D. Brinkley

Sherry D. Brinkley
Petitions Examiner
Office of Petitions

UNITED STATES PATENT AND TRADEMARK OFFICE

Commissioner for Patents
United States Patent and Trademark Office
P.O. Box 1450
Alexandria, VA 22313-1450
www.uspto.gov

COPY MAILED

APR 26 2007

OFFICE OF PETITIONS

LADAS & PARRY
26 WEST 61ST STREET
NEW YORK NY 10023

In re Application of	:	
Robert Seemayer et al	:	
Application No. 10/974,447	:	DECISION ON PETITION
Filed: October 27, 2004	:	
Attorney Docket No. U 015425-7	:	

This is a decision on the petition under the unintentional provisions of 37 CFR 1.137(b), filed January 23, 2007, to revive the above-identified application.

The petition is **GRANTED**.

The two-month period for filing an appeal brief under 37 CFR 41.37 (accompanied by the fee required by 37 CFR 41.20(b)(2)), runs from the date of this decision.

This application became abandoned for failure to timely file a reply within the meaning of 37 CFR 1.113 to the final Office action of July 3, 2006. The proposed reply required for consideration of a petition to revive must be a Notice of Appeal (and appeal fee required by 37 CFR 41.20(b)(2)), an amendment that *prima facie* places the application in condition for allowance, a Request for Continued Examination (RCE) and submission (37 CFR 1.114), or the filing of a continuing application under 37 CFR 1.53(b). See MPEP 711.03(c)(III)(A)(2).

The petition satisfies the requirements of 37 CFR 1.137(b) in that petitioner has supplied (1) the reply in the form of a Notice of Appeal; (2) the petition fee of 1,500; and (3) a proper statement of unintentional delay.

Telephone inquiries concerning this decision should be directed to the undersigned at (571) 272-3208.

This application is being referred to Technology Center AU 1625 to await the filing of an appeal brief or for such other appropriate reply as may be submitted to continue prosecution of the application.

Karen Creasy
Petitions Examiner
Office of Petitions

UNITED STATES PATENT AND TRADEMARK OFFICE

Commissioner for Patents
United States Patent and Trademark Office
P.O. Box 1450
Alexandria, VA 22313-1450
www.uspto.gov

TOWNSEND AND TOWNSEND AND CREW, LLP
TWO EMBARCADERO CENTER
EIGHTH FLOOR
SAN FRANCISCO CA 94111-3834

COPY MAILED

NOV 0 5 2009

OFFICE OF PETITIONS

In re Application of	:	
Toshio OTANI et al.	:	
Application No. 10/974,457	:	DECISION ON PETITION
Filed: October 26, 2004	:	
Attorney Docket No. 16869S-133100US	:	

This is a decision on the petition, filed July 29, 2009, which is being treated as a petition under 37 CFR 1.181 (no fee) requesting withdrawal of the holding of abandonment in the above-identified application.

The petition is **GRANTED**.

This application was held abandoned for failure to reply to the Notice to File Corrected Application Papers (Notice) mailed April 27, 2009, which set a two (2) month period for reply. A Notice of Abandonment was mailed on July 14, 2009.

Petitioner asserts that the Notice dated April 27, 2009 was not received.

A review of the written record indicates an irregularity in the mailing of the Notice of April 27, 2009. In this regard, a closer review of the Notice dated April 27, 2009 reveals a typographical error in the application number. The instant application has an application number of 10/974,457. The application number typed on the first page of the Notice incorrectly identifies 10/**8**74,457. Accordingly, as the Office action was mailed to an incorrect address, the Notice of Abandonment mailed July 14, 2009 is hereby vacated and the holding of abandonment withdrawn.

Telephone inquiries concerning this decision should be directed to Niketa I. Patel at 571-272-4156 or in her absence, the undersigned at 571-272-7099.

The required drawing, filed on July 29, 2009, has been received and the application file is being referred to the Office of Data Management for further processing.

David A. Bucci
Petitions Examiner
Office of Petitions

UNITED STATES PATENT AND TRADEMARK OFFICE

Commissioner for Patents
United States Patent and Trademark Office
P.O. Box 1450
Alexandria, VA 22313-1450
www.uspto.gov

FISH & RICHARDSON PC
P O BOX 1022
MINNEAPOLIS, MN 55440-1022

COPY MAILED
JUL 1 0 2006
OFFICE OF PETITIONS

In re Application of	:
Shaoher X. Pan	:
Application No. 10/974,461	: DECISION ON PETITION
Filed: October 25, 2004	: UNDER 37 CFR 1.137(b)
Attorney Docket No. 18529-008001	:

This is a decision on the petition under 37 CFR 1.137(b), filed April 26, 2006, to revive the instant nonprovisional application for failure to timely notify the U.S. Patent and Trademark Office (USPTO) of the filing of an application in a foreign country, or under a multinational treaty that requires publication of applications eighteen months after filing. *See* 37 CFR 1.137(f).

The petition is **DISMISSED**.

Any request for reconsideration of this decision must be submitted within TWO (2) MONTHS from the mail date of this decision. Extensions of time under 37 CFR 1.136(a) are permitted. The reconsideration request should include a cover letter entitled "Renewed Petition under 37 CFR 1.137(b)." This is **not** a final agency action within the meaning of 5 U.S.C. § 704.

The petition states that this application became abandoned on October 26, 2004; however, the petition fails to provide the date of filing of the foreign application. As the stated date of abandonment is October 26, 2004, the filing of the foreign application would have occurred prior to the filing of this application. Therefore, in order to make a proper determination on the merits of the petition to revive, the record must be clear as to the date of filing of the disclosed subject matter in a foreign application. The date of filing of the disclosed subject matter in a foreign country should be provided in a renewed petition under 37 CFR 1.137(b). No additional petition fee is required.

The Nonpublication Request and Certification Under 35 U.S.C. § 122(b)(2)(B)(i) has been rescinded. A Communication Regarding Rescission of Nonpublication Request and/or Notice of Foreign Filing indicating a projected publication date of October 19, 2006 has been mailed under separate cover.

Further correspondence with respect to this matter should be addressed as follows:

By mail: Mail Stop PETITIONS
Commissioner for Patents
Post Office Box 1450
Alexandria, VA 22313-1450

By hand: Customer Service Window
Mail Stop Petitions
Randolph Building
401 Dulany Street
Alexandria, VA 22314

By fax: (571) 273-8300
ATTN: Office of Petitions

Any questions concerning this matter may be directed to the undersigned at (571) 272-3218.

Frances Hicks

Frances Hicks
Petitions Examiner
Office of Petitions

UNITED STATES PATENT AND TRADEMARK OFFICE

Commissioner for Patents
United States Patent and Trademark Office
P.O. Box 1450
Alexandria, VA 22313-1450
www.uspto.gov

FISH & RICHARDSON PC
P O BOX 1022
MINNEAPOLIS, MN 55440-1022

COPY MAILED
OCT 0 2 2006
OFFICE OF PETITIONS

In re Application of :
Shaoher X. Pan :
Application No. 10/974,461 : DECISION ON PETITION
Filed: October 25, 2004 : UNDER 37 CFR 1.137(b)
Attorney Docket No. 18529-008001 :

This is a decision on the renewed petition under 37 CFR 1.137(b), filed September 5, 2006, to revive this nonprovisional application for failure to timely notify the U.S. Patent and Trademark Office (USPTO) of the filing of an application in a foreign country, or under a multinational treaty that requires publication of applications eighteen months after filing. *See* 37 CFR 1.137(f).

The petition is **GRANTED**.

The petition filed on April 26, 2006 was dismissed in a decision mailed July 10, 2006 for failure to state the date of filing of the foreign application.

In reply, petitioner states that "PCT application number PCT/US2004/035662 * * * was filed on October 26, 2004. The PCT application includes subject matter disclosed in this application." Petitioner has provided a chart which compares claim 16 as originally filed in this application to claim 1 as originally filed in the PCT application and provides an explanation as to how claim 16 of this application differs from claim 1 in the PCT application. Petitioner states on page 2 in the last sentence of the third paragraph that "[a]pplicant believes that claim 1 of the PCT application would be supported by the specification of this application." Petitioner requests that "the Patent Office determine whether the PCT application was 'directed to the invention disclosed' in this application, and thus whether this application is abandoned under 37 CFR 1.213(c)."

The statute at 35 U.S.C. § 122(b)(1)(B)(i) states that, upon filing of a request for nonpublication, applicant must certify that the invention "disclosed" in the application has not and will not be the subject of an application filed in another country, or under a multilateral international agreement, that requires publication of applications 18 months after filing. Petitioner has made the statement that "[t]he PCT application includes subject matter disclosed in this application." Therefore, by petitioner's own admission, the subject matter of this application is disclosed in the PCT application. Accordingly, the appropriate avenue of relief is by way of the filing of a petition under 37 CFR 1.137(b). Petitioner is

advised that the USPTO does not make any determination as to whether the subject matter of an application is disclosed in a PCT application in those instances where a petition under 37 CFR 1.137(b) has been filed. The determination as to whether or not a petition under 37 CFR 1.137(b) is necessary must be made by the applicant and the burden of such determination cannot be shifted to the USPTO.

A petition to revive an application abandoned pursuant to 35 U.S.C. 122(b)(2)(B)(iii) for failure to notify the USPTO of a foreign filing must be accompanied by:

(1) the required reply which is met by the notification of such filing in a foreign country or under a multinational treaty;
(2) the petition fee as set forth in 37 CFR 1.17(m); and
(3) a statement that the entire delay in filing the required reply from the due date of the reply until the filing of a grantable petition was unintentional.

The instant petition has been found to be in compliance with 37 CFR 1.137(b). Accordingly, the failure to timely notify the USPTO of a foreign or international filing within 45 days after the date of filing of such foreign or international application as provided by 35 U.S.C. § 122(b)(2)(B)(iii) and 37 CFR 1.213(c) is accepted as having been unintentionally delayed.

The previous Request and Certification under 35 U.S.C. § 122(b)(2)(B)(i) has been rescinded. A Notice Regarding Rescission of Nonpublication Request which sets forth the projected publication date of October 16, 2006, was mailed on July 10, 2006.

Any inquiries concerning this decision may be directed to the undersigned at (571) 272-3218.

This application is being forwarded to Technology Center Art Unit 2873 for appropriate action in the normal course of business on the reply received April 4, 2006.

Frances Hicks
Petitions Examiner
Office of Petitions

UNITED STATES PATENT AND TRADEMARK OFFICE

COMMISSIONER FOR PATENTS
UNITED STATES PATENT AND TRADEMARK OFFICE
P.O. BOX 1450
ALEXANDRIA, VA 22313-1450
WWW.USPTO.GOV

Paper No. None

HARNESS, DICKEY, & PIERCE, P.L.C
7700 BONHOMME, STE 400
ST. LOUIS MO 63105

COPY MAILED

APR 06 2005

OFFICE OF PETITIONS

In re Application of
Brian Marcell et al.
Application No. 10/974,465
Filing Date: October 28, 2004
Attorney Docket No. Golf IT/000001/US
Title: GOLF COURSE MANAGEMENT SYSTEM

DECISION ON PETITION UNDER 37 C.F.R. §§1.10(d)

This is a decision on the petition under 37 C.F.R. §1.10(c) that is properly treated as a petition under 37 C.F.R. §1.10(d)[1], filed January 20, 2005, requesting that application number 10/974,465 be accorded a filing date of October 27, 2004.

The application was deposited on October 28, 2004. Shortly thereafter, a filing receipt was mailed by the Office, which indicated that the application had received a filing date of October 28, 2004.

With the instant petition, Petitioner has alleged that the application was deposited on October 27, 2004. With his petition, Petitioner has included a copy of express mail label EV412030589US[2] bearing a date-in field of "10 28."

A check of the Office's USPS Express Mail Finder Database computer program was inconclusive. A check of the United States Postal Service's website

1 37 C.F.R. §1.10(c) is applicable when a discrepancy exisits between the filing date accorded by the Office to the correspondence and the date of deposit as shown by the "date-in" on the "Express Mail" mailing label. With the present application, no such discrepancy exists.

2 It is noted that this same Express Mail number appears on Utility Patent Application Transmittal sheet which was included on filing.

(http://www.usps.com/shipping/trackandconfirm.htm) was also inconclusive, in that it stated that the information pertaining to this Express Mail label number is stored off-line. A copy of the latter search result is enclosed.

37 C.F.R. §1.10(d) sets forth:

Any person filing correspondence under this section that was received by the Office and delivered by the "Express Mail Post Office to Addressee" service of the USPS, who can show that the "date-in" on the "Express Mail" mailing label or other official notation entered by the USPS was incorrectly entered or omitted by the USPS, may petition the Director to accord the correspondence a filing date as of the date the correspondence is shown to have been deposited with the USPS, provided that:

(1) The petition is filed promptly after the person becomes aware that the Office has accorded, or will accord, a filing date based upon an incorrect entry by the USPS;

(2) The number of the "Express Mail" mailing label was placed on the paper(s) or fee(s) that constitute the correspondence prior to the original mailing by "Express Mail"; and

(3) The petition includes a showing which establishes, to the satisfaction of the Director, that the requested filing date was the date the correspondence was deposited in the "Express Mail Post Office to Addressee" service prior to the last scheduled pickup for that day. Any showing pursuant to this paragraph must be corroborated by evidence from the USPS or that came into being after deposit and within one business day of the deposit of the correspondence in the "Express Mail Post Office to Addressee" service of the USPS.

Petitioner has not explicitly asserted that the USPS placed the wrong date on the Express Mail label at hand. However, since Petitioner has filed a petition under 37 C.F.R. §1.10, and the filing date Petitioner seeks differs from the "date-in" field on the Express Mail label, this assertion is inherent with the filing of this petition.

This application received a filing date of October 28, 2004, which is the date that appears in the date-in field. In order for Petitioner to establish that the correspondence at issue was deposited in the "Express Mail Post Office to Addressee" service prior to the last scheduled pickup on a day other than the filing date assigned to him by the Office, Petitioner must provide a showing which is corroborated by evidence from the USPS or that came into being after deposit and within one business day of the deposit of the correspondence in the "Express Mail Post Office to Addressee" service of the USPS.

Petitioner has supplied a copy of the Express Mail label that contains a "date-in date" of "10 28." No showing has been

provided which is corroborated by evidence from the USPS or that came into being after deposit and within one business day of the deposit of the correspondence in the "Express Mail Post Office to Addressee" service of the USPS. Petitioner has included a copy of his return postcard that contains the field "Mailed: October 27, 2004," but clearly a postcard which was placed in the Express Mail envelope did not come into being after the express mail envelope was deposited with the USPS.

As no showing has been provided, this petition must be **DISMISSED**.

The application file is being forwarded to Files Repository. The filing date will remain October 28, 2004.

The general phone number for the Office of Petitions which should be used for status requests is (571) 272-3282. Telephone inquiries regarding *this decision* should be directed to the undersigned at (571) 272-3225.

Paul Shanoski
Senior Attorney
Office of Petitions
United States Patent and Trademark Office

Encl. Printout of USPS online tracking results

UNITED STATES PATENT AND TRADEMARK OFFICE

COMMISSIONER FOR PATENTS
UNITED STATES PATENT AND TRADEMARK OFFICE
P.O. BOX 1450
ALEXANDRIA, VA 22313-1450
WWW.USPTO.GOV

Paper No. None

HARNESS, DICKEY, & PIERCE, P.L.C
7700 BONHOMME, STE 400
ST. LOUIS MO 63105

COPY MAILED

MAY 3 1 2005

OFFICE OF PETITIONS

In re Application of
Brian Marcell et al.
Application No. 10/974,465
Filing Date: October 27, 2004
Attorney Docket No. Golf IT/000001/US
Title: GOLF COURSE MANAGEMENT SYSTEM

DECISION ON RENEWED PETITION UNDER 37 C.F.R. §1.10(c)

This is a decision on the renewed petition under 37 C.F.R. §1.10(c), filed April 25, 2005, requesting that application number 10/974,465 be accorded a filing date of October 27, 2004.

The application was deposited on October 28, 2004. Shortly thereafter, a filing receipt was mailed by the Office, which indicated that the application had received a filing date of October 28, 2004.

The original petition was submitted on January 20, 2005, and was dismissed via the mailing of a decision on April 6, 2005.

The renewed petition is **GRANTED**.

The application file is being returned to the Office of Initial Patent Examination for further processing with a **filing date of October 27, 2004**, as well as the **mailing of a corrected filing receipt**.

The general phone number for the Office of Petitions which should be used for status requests is (571) 272-3282. Telephone inquiries regarding *this decision* should be directed to the undersigned at (571) 272-3225.

Paul Shanoski
Senior Attorney
Office of Petitions
United States Patent and Trademark Office

SPE RESPONSE FOR CERTIFICATE OF CORRECTION

Paper No.: _____

DATE : 6/20/07

TO SPE OF : ART UNIT 2873

SUBJECT : Request for Certificate of Correction for Appl. No.: 10974468 Patent No.: 7167298

Please respond to this request for a certificate of correction within 7 days.

Please review the requested changes/corrections as shown in the **COCIN** document(s) in the IFW application image. No new matter should be introduced, nor should the scope or meaning of the claims be changed.

Please complete the response (see below) and forward the completed response to scanning using document code **COCX**.

Valerie Jackson
Certificates of Correction Branch
703-308-9390 ext. 114

Thank You For Your Assistance

The request for issuing the above-identified correction(s) is hereby:

Note your decision on the appropriate box.

- [x] **Approved** — All changes apply.
- [ ] **Approved in Part** — Specify below which changes **do not** apply.
- [ ] **Denied** — State the reasons for denial below.

Comments: _____

Ricky Mack
RICKY MACK
SUPERVISORY PATENT EXAMINER
SPE

2873
Art Unit

Attorney's Docket No.: 18529-009001 / SP001

IN THE UNITED STATES PATENT AND TRADEMARK OFFICE

Applicant : Shaoher X. Pan
Patent No. : 7,167,298
Issue Date : January 23, 2007
Serial No. : 10/974,468
Filed : October 26, 2004
Title : HIGH CONTRAST SPATIAL LIGHT MODULATOR AND METHOD

Art Unit : 2873
Examiner : David N. Spector

Attn.: Certificate of Corrections Branch
Commissioner for Patents
P.O. Box 1450
Alexandria, VA 22313-1450

TRANSMITTAL OF REQUEST FOR CERTIFICATE OF CORRECTION

Applicant hereby requests that a certificate of correction be issued for the above patent in accordance with the attached request. Applicant submits that the mistake is one for which a certificate of correction can be issued, as required by 35 U.S.C. § 255. The error was a clerical error and/or a mistake of minor character and the proposed correction does not introduce new matter, in that Figure 1A is merely changed for consistency with other Figures. In particular, the reflective layer (reference number 606) in FIG. 25 is shown as parallel to the mirror plate (reference number 605) and the correction makes the reflective layer (reference number 102) parallel with the mirror plate (reference number 103a/103b) in Figure 1A.

The error sought to be corrected was made by applicant, and a check for $100 is enclosed to cover the required fee of 37 CFR §1.20(a).

Please apply any charges or credits to Deposit Account No. 06-1050.

Respectfully submitted,

Date: June 11, 2007

Jennifer A. Zanocco
Reg. No. 54,563

Customer No. 26181
Fish & Richardson P.C.
Telephone: (650) 839-5070
Facsimile: (650) 839-5071

50419186.doc

Staple Here Only

UNITED STATES PATENT AND TRADEMARK OFFICE
CERTIFICATE OF CORRECTION

PATENT NO. .: 7,167,298

APPLICATION NO .: 10/974,468

DATED .: JANUARY 23, 2007

INVENTOR(S) .: SHAOHER X. PAN

It is certified that an error appears in the above-identified patent and that said Letters Patent is hereby corrected as shown below:

Please replace Figure 1A, with:

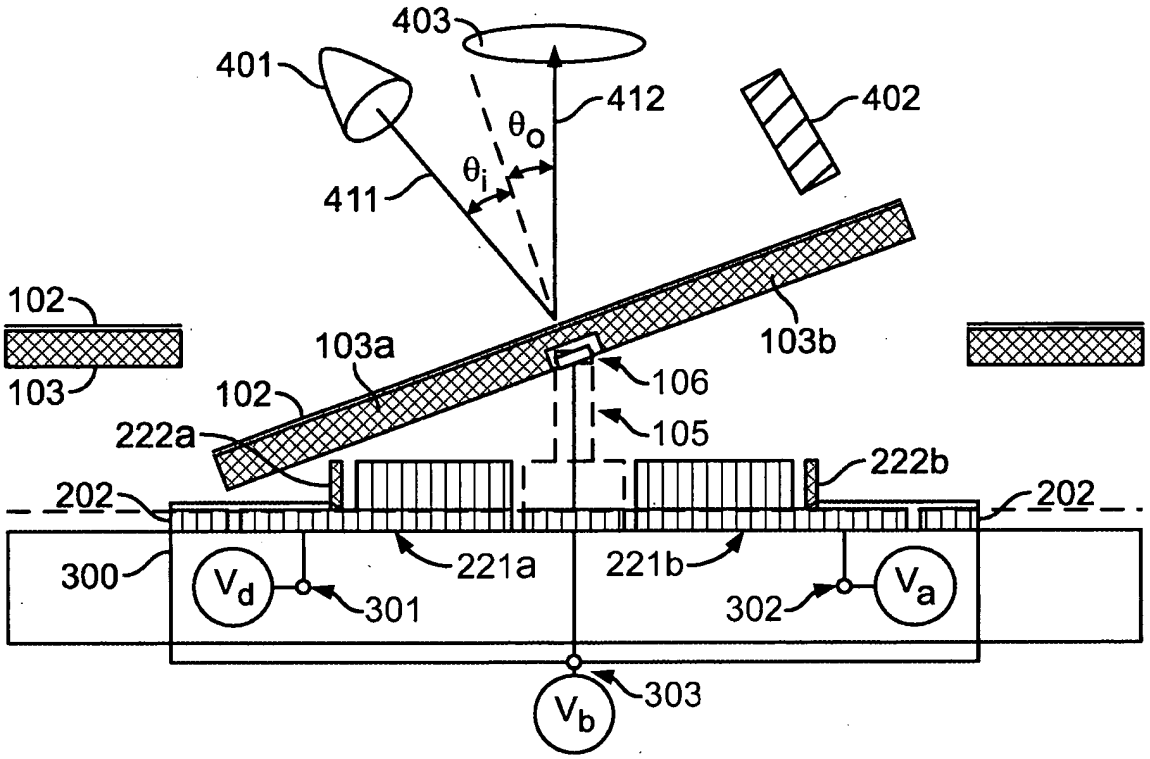

MAILING ADDRESS OF SENDER:

Jennifer A. Zanocco
Fish & Richardson P.C.
P.O. Box 1022
Minneapolis, Minnesota 55440-1022

UNITED STATES PATENT AND TRADEMARK OFFICE

Commissioner for Patents
United States Patent and Trademark Office
P.O. Box 1450
Alexandria, VA 22313-1450
www.uspto.gov

USDA-ARS-OFFICE OF TECHNOLOGY TRANSFER
PATENT ADVISORS OFFICE
WESTERN REGIONAL RESEARCH CENTER
800 BUCHANAN ST
ALBANY, CA 94710

COPY MAILED
JAN 27 2010

In re Application of
Donald W. Meyer, et al.
Application No. 10/974,471
Filed: October 27 2004
Attorney Docket No. 7596

ON PETITION

This is a decision on the petition, filed June 29, 2009, to revive the above-identified application under 37 CFR 1.137(b).

The petition is GRANTED.

The two-month period for filing an appeal brief under 37 CFR 41.37 (accompanied by the fee required by 37 CFR 41.20(b)(2)), runs from the date of this decision.

This application became abandoned for failure to timely file a reply within the meaning of 37 CFR 1.113 to the final Office action of July 24, 2008. A Notice of Abandonment was mailed on February 13, 2009. The proposed reply required for consideration of a petition to revive must be a Notice of Appeal (and appeal fee required by 37 CFR 41.20(b)(2)), an amendment that *prima facie* places the application in condition for allowance, a Request for Continued Examination (RCE) and submission (37 CFR 1.114), or the filing of a continuing application under 37 CFR 1.53(b). See MPEP 711.03(c)(II)(A)(2).

The petition satisfies the requirements of 37 CFR 1.137(b) in that petitioner has supplied (1) the reply in the form of a Notice of Appeal and appeal fee of $540; (2) the petition fee of $1,620; and (3) an adequate statement of unintentional delay.

This application is being referred to Technology Center AU 1641 to await the filing of an appeal brief or for such other appropriate reply as may be submitted to continue prosecution of the application.

Telephone inquiries concerning this decision should be directed to the undersigned at (571) 272-3204. Inquiries relating to further prosecution should be directed to the Technology Center.

Sherry D. Brinkley
Petitions Examiner
Office of Petitions

UNITED STATES PATENT AND TRADEMARK OFFICE

UNITED STATES DEPARTMENT OF COMMERCE
United States Patent and Trademark Office
Address: COMMISSIONER FOR PATENTS
P.O. Box 1450
Alexandria, Virginia 22313-1450
www.uspto.gov

APPLICATION NO.	FILING DATE	FIRST NAMED INVENTOR	ATTORNEY DOCKET NO.	CONFIRMATION NO.
10/974,478	10/27/2004	Daniel G. Norgaard	3334.02US02	3980

24113 7590 09/14/2005

PATTERSON, THUENTE, SKAAR & CHRISTENSEN, P.A.
4800 IDS CENTER
80 SOUTH 8TH STREET
MINNEAPOLIS, MN 55402-2100

EXAMINER
NGUYEN, SON T

ART UNIT	PAPER NUMBER
3643	

DATE MAILED: 09/14/2005

Please find below and/or attached an Office communication concerning this application or proceeding.

UNITED STATES PATENT AND TRADEMARK OFFICE

Commissioner for Patents
United States Patent and Trademark Office
P.O. Box 1450
Alexandria, VA 22313-1450
www.uspto.gov

24113
Patterson, Thuente, Skaar & Christensen, P.A.
4800 IDS Center
80 South 8th Street
Minneapolis, MN
55402-2100

In re Application of	:	PETITION TO
Norgaard et al.	:	ACCEPT COLOR
Application No. 10/974,478	:	DRAWINGS/PHOTOGRAPHS
Filed: October 27, 2004	:	
For: Method of Selecting Crop Varieties		

This is a decision on applicant's petition under 37 CFR 1.84(A)(2) Filed July 19, 2005 to accept color drawings/photographs.

For the acceptance of color drawings in accordance with 37 CFR 1.84(A)(2), a petition is required which fulfills the following requirements:

(i) The appropriate fee set forth in 1.17(h),
(ii) three (3) sets of color drawings/photographs, and
(iii) amending the specification to contain the following language as the first paragraph in that portion of the specification relating to the brief description of the drawings: "The file of this patent contains at least one drawing executed in color photography. Copies of this patent with color photographs will be provided by the Patent and Trademark Office upon request and payment of necessary fee."

Having met the requirements of 37 CFR 1.84(A)(2), the petition is **GRANTED**.

Any questions or comments with respect to the decision should be forwarded to Supervisory Patent Examiner, Peter M. Poon at the number listed below.

Peter M. Poon 9/9/05

Peter M. Poon
Supervisory Patent Examiner
Art Unit 3643
(571) 272-6891

pmp: 9/9/05

HC

UNITED STATES PATENT AND TRADEMARK OFFICE

Commissioner for Patents
United States Patent and Trademark Office
P.O. Box 1450
Alexandria, VA 22313-1450
www.uspto.gov

TOWNSEND AND TOWNSEND AND CREW, LLP
TWO EMBARCADERO CENTER
EIGHTH FLOOR
SAN FRANCISCO CA 94111-3834

COPY MAILED

NOV 22 2006

OFFICE OF PETITIONS

In re Application of	:	
Daniel Burnett, et al.	:	
Application No. 10/974, 482	:	DECISION ON PETITION
Filed: October 26, 2004	:	TO WITHDRAW
Attorney Docket No. 022190-000500US	:	FROM RECORD
	:	

This is a decision on the Request to Withdraw as attorney or agent of record under 37 C.F.R. § 1.36(b) filed August 11, 2006.

The request is **APPROVED**.

A grantable request to withdraw as attorney/agent of record must be signed by every attorney/agent seeking to withdraw or contain a clear indication that one attorney is signing on behalf of another/others. A request to withdraw will not be approved unless at least 30 (thirty) days would remain between the date of approval and the later of the expiration date of a time to file a response or the expiration date of the maximum time period which can be extended under 37 C.F.R. § 1.136(a).

The request was signed by Mark D. Barrish on behalf of all attorneys of record who are associated with customer No. 20350.

All attorneys/agents associated with the Customer Number 20350 have been withdrawn.

Applicant is reminded that there is no attorney of record at this time.

The request to change the correspondence of record is not acceptable as the requested correspondence address is not that of: (1) the first named signing inventor; or (2) an intervening assignee of the entire interest under 37 C.F.R 3.71. All future communications from the Office will be directed to the first named signing inventor at the first copied address below until otherwise properly notified by the applicant.

In order to request or take action in a patent matter, the assignee must establish its ownership of the patent to the satisfaction of the Director. In this regard, a Statement under 37 CFR 3.73(b) must have either: (i) documentary evidence of a chain of title from the original owner to the assignee (*e.g.*, copy of an executed assignment), and a statement affirming that the documentary evidence of the chain of title from the original owner to the assignee was or concurrently is being submitted for recordation pursuant to § 3.11; or (ii) a statement specifying where documentary evidence of a chain of title from the original owner to the assignee is recorded in the assignment records of the Office (*e.g.*, reel and frame number). The power of attorney filed on February 17, 2005 does not include the reel and frame number or a proper chain of title.

Telephone inquiries concerning this decision should be directed to April Wise at 571-272-1642.

April M. Wise
Petitions Examiner
Office of Petitions

cc: DANIEL R. BURNETT
215 VALDEZ AVENUE
SAN FRANCISCO, CA 94127

cc: LUCE, FORWARD, HAMILTON & SCRIPPS LLP
11988 EL CAMINO REAL
SUITE 200
SAN DIEGO CA 92130

UNITED STATES PATENT AND TRADEMARK OFFICE

UNITED STATES DEPARTMENT OF COMMERCE
United States Patent and Trademark Office
Address: COMMISSIONER FOR PATENTS
P.O. Box 1450
Alexandria, Virginia 22313-1450
www.uspto.gov

APPLICATION NUMBER	FILING OR 371 (c) DATE	FIRST NAMED APPLICANT	ATTY. DOCKET NO./TITLE
10/974,482	10/26/2004	Daniel R. Burnett	022190-000500US

CONFIRMATION NO. 3976

OC000000021229908

OC000000021229908

20350
TOWNSEND AND TOWNSEND AND CREW, LLP
TWO EMBARCADERO CENTER
EIGHTH FLOOR
SAN FRANCISCO, CA 94111-3834

Date Mailed: 11/15/2006

NOTICE REGARDING CHANGE OF POWER OF ATTORNEY

This is in response to the Power of Attorney filed 08/11/2006.

- The withdrawal as attorney in this application has been accepted. Future correspondence will be mailed to the new address of record. 37 CFR 1.33.

April M Wise

APRIL M WISE
OP (571) 272-1642

FORMER ATTORNEY/AGENT COPY

UNITED STATES PATENT AND TRADEMARK OFFICE

UNITED STATES DEPARTMENT OF COMMERCE
United States Patent and Trademark Office
Address: COMMISSIONER FOR PATENTS
P.O. Box 1450
Alexandria, Virginia 22313-1450
www.uspto.gov

SCULLY SCOTT MURPHY & PRESSER, PC
400 GARDEN CITY PLAZA
SUITE 300
GARDEN CITY, NY 11530

Mail Date: 04/21/2010

Applicant	: Akio Uchiyama	: DECISION ON REQUEST FOR
Patent Number	: 7604591	: RECALCULATION of PATENT
Issue Date	: 10/20/2009	: TERM ADJUSTMENT IN VIEW
Appliction No	: 10/974,486	: OF WYETH AND NOTICE OF INTENT TO
Filed	: 10/27/2004	: ISSUE CERTIFICATE OF CORRECTION
		:

The Request for Recalculation is **GRANTED** to the extent indicated.

The patent term adjustment has been determined to be **1324** days. The USPTO will *sua sponte* issue a certificate of correction reflecting the amount of PTA days determined by the recalculation.

Prior to the issuance of the certificate of correction, the USPTO will afford patentee an opportunity to be heard and request reconsideration. Accordingly, patentee has **one month or thirty (30) days**, whichever is longer, to file a request for reconsideration of this patent term adjustment calculation. See 35 U.S.C. 154(b)(3)(B)(ii) and 37 CFR 1.322(a)(4). No extensions of time will be granted under 37 CFR 1.136.

Patentee should use document code PET.OP if electronically filing a request for reconsideration of this patent term adjustment calculation. The patentee must also include the information required by 37 CFR 1.705(b)(2) and the fee required by 37 CFR 1.18(e). If patentee does not file a timely request for reconsideration of this patent term adjustment calculation including the information required by 37 CFR 1.705(b)(2) and the fee required by 37 CFR 1.18(e), the USPTO will issue a certificate of correction reflecting the PTA determination noted above.

Patentee should be aware that in order to preserve the right to review in the United States District Court for the District of Columbia of the USPTO patent term adjustment determination, patentee must ensure that he or she also take the steps required under 35 U.S.C. 154(b)(4)(A) in a timely manner. Nothing in the request for recalculation should be construed as providing an alternative time frame for commencing a civil action under 35 U.S.C. 154(b)(4)(A).

Any questions concerning this decision should be directed to the Office of Patent Legal Administration at 571-272-7702.

UNITED STATES PATENT AND TRADEMARK OFFICE

UNITED STATES DEPARTMENT OF COMMERCE
United States Patent and Trademark Office
Address: COMMISSIONER FOR PATENTS
P.O. Box 1450
Alexandria, Virginia 22313-1450
www.uspto.gov

SCULLY SCOTT MURPHY & PRESSER, PC
400 GARDEN CITY PLAZA
SUITE 300
GARDEN CITY, NY 11530

Mail Date: 05/18/2010

Applicant : Akio Uchiyama
Patent Number : 7604591
Issue Date : 10/20/2009
Application No: 10/974,486
Filed : 10/27/2004

: NOTICE CONCERNING IMPROPER
: CALCULATION OF PATENT TERM
: ADJUSTMENT BASED UPON USPTO
: IMPROPERLY MEASURING REDUCTION
: PERIOD UNDER 37 CFR 1.704(c)(10).

The United States Patent and Trademark Office (USPTO) discovered that in processing the recent recalculation decisions mailed in response to patentee's filed Request for Recalculation of Patent Term Adjustment in view of Wyeth, the USPTO improperly measured the reduction period for reductions under 37 CFR 1.704(c)(10). Pursuant to 37 CFR 1.704(c)(10), patentee's reduction begins on the date of filing the amendment under 37 CFR 1.312 ("1.312 amendment") or other related paper and ends on the date that the Office mails a response to the filing of the 1.312 amendment or other paper. It has been discovered that during the recalculation, the calculation failed to the limit the reduction to the mail date of the response to the 1.312 amendment or other paper. Accordingly, patentee's reductions were greater than warranted.

This notice **VACATES** the previous GRANTED request for recalculation and provides patentee with a revised GRANTED recalculation.

The patent term adjustment has been determined to be **1371** days. The USPTO will *sua sponte* issue a certificate of correction reflecting the amount of patent term adjustment (PTA) days determined by the recalculation.

Prior to the issuance of the certificate of correction, the USPTO will afford patentee an opportunity to be heard and request reconsideration. Accordingly, patentee has **one month or thirty (30) days** from the mail date of this notice, whichever is longer, to file a request for reconsideration of this PTA calculation. See 35 U.S.C. § 154(b)(3)(B)(ii) and 37 CFR 1.322(a)(4).

Patentee should use document code PET.OP if electronically filing a request for reconsideration of this PTA calculation. The patentee must also include the information required by 37 CFR 1.705(b)(2), and the fee required by 37 CFR 1.18(e). If patentee does not file a timely request for reconsideration of this PTA calculation, including the information required by 37 CFR 1.705(b)(2) and the fee required by 37 CFR 1.18(e), the USPTO will issue a certificate of correction reflecting the PTA determination noted above.

Patentee should be aware that in order to preserve the right of review of the USPTO's PTA determination in the United States District Court for the District of Columbia, patentee must ensure that the steps required under 35 U.S.C. § 154 (b)(4) are taken in a timely manner. Nothing in the request for recalculation should be construed as providing an alternative time frame for commencing a civil action under 35 U.S.C. § 154(b)(4).

UNITED STATES PATENT AND TRADEMARK OFFICE

Commissioner for Patents
United States Patent and Trademark Office
P.O. Box 1450
Alexandria, VA 22313-1450
www.uspto.gov

MARK A. LITMAN & ASSOCIATES, P.A.
YORK BUSINESS CENTER, SUITE 205
3209 WEST 76TH STREET
EDINA MN 55435

COPY MAILED

JUL 14 2006

OFFICE OF PETITIONS

In re Application of :
Roger M. Snow :
Application No. 10/974,506 :
Filed: October 27, 2004 :
Attorney Docket No. PA1181.AP.US :

ON PETITION

This is a decision on the petition, filed July 7, 2006, and resubmitted on July 13, 2006, under 37 CFR 1.313(c)(2) to withdraw the above-identified application from issue after payment of the issue fee.

The petition is **GRANTED**.

The above-identified application is withdrawn from issue for consideration of a submission under 37 CFR 1.114 (request for continued examination). See 37 CFR 1.313(c)(2).

Petitioner is advised that the issue fee paid on April 3, 2006, in the above-identified application cannot be refunded. If, however, the above-identified application is again allowed, petitioner may request that it be applied towards the issue fee required by the new Notice of Allowance.[1]

Telephone inquiries should be directed to the undersigned at (571) 272-3208.

The examiner of Technology Center AU 3711 will consider the request for continued examination under 37 CFR 1.114.

Karen Creasy

Karen Creasy
Petitions Examiner
Office of Petitions

---

[1] The request to apply the issue fee to the new Notice may be satisfied by completing and returning the new Issue Fee Transmittal Form PTOL-85(b), which includes the following language thereon: "Commissioner for Patents is requested to apply the Issue Fee and Publication Fee (if any) or re-apply any previously paid issue fee to the application identified above." Petitioner is advised that, whether a fee is indicated as being due or not, the Issue Fee Transmittal Form **must** be completed and timely submitted to avoid abandonment. Note the language in bold text on the first page of the Notice of Allowance and Fee(s) Due (PTOL-85).

UNITED STATES PATENT AND TRADEMARK OFFICE

COMMISSIONER FOR PATENTS
UNITED STATES PATENT AND TRADEMARK OFFICE
P.O. BOX 1450
ALEXANDRIA, VA 22313-1450
www.uspto.gov

Paper No. _____

Date : July 14, 2006

TO : Director, Office of Patent Publication

FROM : Office of the Deputy Commissioner
for Patent Examination Policy

SUBJECT : Withdrawal from Issue of

Applicant(s) :Roger M. Snow
Application No. :10/974,506
Filed :October 27, 2004

The above-identified application has been assigned Patent No. 7,077,401 and an issue date of July 18, 2006.

It is hereby directed that this application be withdrawn from issue at the request of the applicant.

Do not refund the issue fee.

The following erratum should be published in the Official Gazette if the above-identified application is published in the OG of July 18, 2006:

"All reference to Patent No. 7,077,401 to Roger M. Snow of Nevada for POKER GAME WITH DEALER DISQUALIFYING HAND appearing in the Official Gazette of July 18, 2006 should be deleted since no patent was granted."

Karen Creasy

Karen Creasy
Petitions Examiner
Office of Petitions
Office of the Deputy Commissioner
for Patent Examination Policy

cc: Paul Harrison, MDW-4B03,(FAX-273-5468)
Deneise Boyd, MDE-3D39 (FAX-273-5124)
Mary Louise McAskill, ST-8C15 (FAX 305-4372)
Niomi Farmer, ST-8C14 (FAX-305-4372)
Mary E. Johnson (Cookie), MDE-7C71 (FAX 273-0038
Duane Davis P/OPC MDE-7D89

SPE RESPONSE FOR CERTIFICATE OF CORRECTION

Paper No.:20070823

DATE : August 24, 2007

TO SPE OF : ART UNIT 2617

SUBJECT : Request for Certificate of Correction on Patent No.: 7203506

A response is requested with respect to the accompanying request for a certificate of correction.

Please complete this form and return with file, within **7** days to:
Certificates of Correction Branch - PK 3-910
Palm location **7590** - Tel. No. 305-8201

With respect to the change(s) requested, correcting Office and/or Applicant's errors, should the patent read as shown in the certificate of correction? No new matter should be introduced, nor should the scope or meaning of the claims be changed.

Thank You For Your Assistance **Certificates of Correction Branch**

The request for issuing the above-identified correction(s) is hereby:
Note your decision on the appropriate box.

☒ **Approved** **All** changes apply.

☐ **Approved in Part** Specify below which changes **do not** apply.

☐ **Denied** State the reasons for denial below.

Comments:

A discussion with applicant's attorney on 8-24-2007 revealed that ONLY the following data is being corrected:
-- "Related US Application Data"
-- "Foreign Application Priority Data"
-- "Cross-Reference to Related Applications"

The previously allowed claims are not being changed (eg. the allowance sent 12/06 reflects the allowed claims). Therefore, disregard any/all attached pages from the request which are from the Preliminary Amendment submitted in 2004. These were provided for background purposes only.

STEVE M. D'AGOSTA
PRIMARY EXAMINER
8-24-07

UNITED STATES PATENT AND TRADEMARK OFFICE

Commissioner for Patents
United States Patent and Trademark Office
P.O. Box 1450
Alexandria, VA 22313-1450
www.uspto.gov

MINTZ, LEVIN, COHN, FERRIS, GLOVSKY
AND POPEO, P.C.
ONE FINANCIAL CENTER
BOSTON, MA 02111

COPY MAILED

MAR 1 2 2008

OFFICE OF PETITIONS

In re Application of :
Luciano Franzolini :
Application No. 10/974,525 : DECISION ON PETITION
Filed: October 27, 2004 :
Attorney Docket No. 34106603 :

This is a decision on the petition under the unintentional provisions of 37 CFR 1.137(b), filed November 12, 2007, to revive the above-identified application.

The petition is **DISMISSED.**

Any request for reconsideration of this decision must be submitted within TWO (2) MONTHS from the mail date of this decision. Extensions of time under 37 CFR 1.136(a) are permitted. The reconsideration request should include a cover letter entitled "Renewed Petition under 37 CFR 1.137(b)." This is **not** a final agency action within the meaning of 5 U.S.C. § 704.

The application became abandoned for failure to reply in a timely manner to the Restriction Requirement, mailed August 26, 2005, which set a shortened statutory period for reply of one (1) month or thirty (30) days (whichever is later). No extension of time under the provisions of 37 CFR 1.136(a) was obtained. Accordingly, the application became abandoned on September 27, 2005. On November 12, 2007, the present petition was filed.

A grantable petition under 37 CFR 1.137(b) must be accompanied by: (1) the required reply, unless previously filed; (2) the petition fee as set forth in 37 CFR 1.17(m); (3) a statement that the entire delay in filing the required reply from the due date for the reply until the filing of a grantable petition pursuant to 37 CFR 1.137(b) was unintentional; and (4) any terminal disclaimer (and fee as set forth in 37 CFR 1.20(d)) required by 37 CFR 1.137(d). Where there is a question as to whether either the abandonment or the delay in filing a petition under 37 CFR

1.137 was unintentional, the Director may require additional information. *See* MPEP 711.03(c)(II)(C) and (D). The instant petition lacks item (3).

In this regard, the record indicates that petitioner was not responsible for prosecution of the application when the reply necessary to avoid abandonment was due. Further, there are three periods to be considered during the evaluation of a petition under 37 CFR 1.137(b):

(1) the delay in reply that originally resulted in the abandonment;

(2) the delay in filing an initial petition pursuant to 37 CFR 1.137(b) to revive the application; and

(3) the delay in filing a grantable petition pursuant to 37 CFR 1.137(b) to revive the application.

Currently, the delay has not been shown to the satisfaction of the Director to be unintentional for periods (1) and (2).

As to Period (1):

The patent statute at 35 U.S.C. § 41(a)(7) authorizes the Director to revive an "unintentionally abandoned application." The legislative history of Public Law 97-247 reveals that the purpose of 35 U.S.C. § 41(a)(7) is to permit the Office to have more discretion than in 35 U.S.C. §§ 133 or 151 to revive abandoned applications in appropriate circumstances, but places a limit on this discretion, stating that "[u]nder this section a petition accompanied by either a fee of $500 or a fee of $50 **would not be granted where the abandonment** or the failure to pay the fee for issuing the patent **was intentional** as opposed to being unintentional or unavoidable." [emphasis added]. See H.R. Rep. No. 542, 97th Cong., 2d Sess. 6-7 (1982), *reprinted in* 1982 U.S.C.C.A.N. 770-71. The revival of an intentionally abandoned application is antithetical to the meaning and intent of the statute and regulation.

35 U.S.C. § 41(a)(7) authorizes the Director to accept a petition "for the revival of an unintentionally abandoned application for a patent." As amended December 1, 1997, 37 CFR 1.137(b)(3) provides that a petition under 37 CFR 1.137(b) must be accompanied by a statement that the delay was unintentional, but provides that "[t]he Commissioner may require additional information where there is a question whether the delay was

unintentional." Where, as here, there is a question whether the initial delay was unintentional, the petitioner must meet the burden of establishing that the delay was unintentional within the meaning of 35 U.S.C. § 41(a)(7) and 37 CFR 1.137(b). *See* In re Application of G, 11 USPQ2d 1378, 1380 (Comm'r Pats. 1989); 37 CFR 1.137(b). Here, in view of the inordinate delay (over two years) in resuming prosecution, there is a question whether the entire delay was unintentional. Petitioner should note that the issue is not whether some of the delay was unintentional by any party; rather, the issue is whether the entire delay has been shown to the satisfaction of the Director to be unintentional.

The question under 37 CFR 1.137(b) for period (1) is whether the delay on the part of the party having the right or authority to reply to avoid abandonment (or not reply) was unintentional. Accordingly, any renewed petition must clearly identify the party having the right to reply to avoid abandonment on September 27, 2005. That party, in turn must explain what effort(s) was made to further reply to the outstanding Office action and, further, why no reply was filed. If no effort was made to further reply, then that party must explain why the delay in this application does not result from a deliberate course of action (or inaction). Likewise, as Seyfarth Shaw LLP was counsel of record at the time of abandonment, Seyfarth Shaw LLP should explain why this application became abandoned while it was under their control and what efforts Seyfarth Shaw LLP made to further reply of itself and with whom this matter was discussed outside of Seyfarth Shaw LLP. Copies of any correspondence relating to the filing, or to not filing a further reply to the outstanding Office action are required from any and all persons then at Seyfarth Shaw LLP, and the responsible person(s) having firsthand knowledge of the circumstances surrounding the lack of a reply to the outstanding Office action. As the courts have made clear, it is pointless for the USPTO to revive a long abandoned application without an adequate showing that the delay did not result from a deliberate course of action. *See* Lawman Armor v. Simon, 2005 U.S. Dist. LEXIS 10843, 74 USPQ2d 1633 (DC EMich 2005); Field Hybrids, LLC v. Toyota Motor Corp., 2005 U.S. Dist. LEXIS 1159 (D. Minn Jan. 27, 2005); Lumenyte Int'l Corp. v. Cable Lite Corp., Nos. 96-1011, 96-1077, 1996 U.S. App. LEXIS 16400, 1996 WL 383927 (Fed. Cir. July 9, 1996) (unpublished) (patents held unenforceable due to a finding of inequitable conduct in submitting an inappropriate statement that the abandonment was unintentional).

As to Period (2):

Likewise, where the applicant deliberately chooses not to seek or persist in seeking the revival of an abandoned application, or where the applicant deliberately chooses to delay seeking the

revival of an abandoned application, the resulting delay in seeking revival of the abandoned application cannot be considered as "unintentional" within the meaning of 37 CFR 1.137(b). *See* MPEP 711.03(c).

The language of both 35 U.S.C. § 41(a)(7) and 37 CFR 1.137(b) are clear and unambiguous, and, furthermore, without qualification. That is, the delay in filing the reply during prosecution, as well as in filing the petition seeking revival, must have been, without qualification, "unintentional" for the reply to now be accepted on petition. The Office requires that the entire delay be at least unintentional as a prerequisite to revival of an abandoned application to prevent abuse and injury to the public. *See* H.R. Rep. No. 542, 97th Cong., 2d Sess. 7 (1982), reprinted in 1982 U.S.C.C.A.N. 771 ("[i]n order to prevent abuse and injury to the public the Commissioner . . . could require applicants to act promptly after becoming aware of the abandonment"). The December 1997 change to 37 CFR 1.137 did not create any new right to overcome an intentional delay in seeking revival, or in renewing an attempt at seeking revival, of an abandoned application. *See* Changes to Patent Practice and Procedure; Final Rule Notice, 62 Fed. Reg. 53131, 53160 (October 10, 1997), 1203 Off. Gaz. Pat. Office 63, 87 (October 21, 1997), which clearly stated that any protracted delay (here, over two years) could trigger, as here, a request for additional information. As the courts have since made clear, a protracted delay in seeking revival, as here, requires a petitioner's detailed explanation seeking to excuse the delay as opposed to USPTO acceptance of a general allegation of unintentional delay. *See* Lawman Armor v. Simon, 2005 U.S. Dist. LEXIS 10843, 74 USPQ2d 1633, at 1637-8 (DC EMich 2005); Field Hybrids, LLC v. Toyota Motor Corp., 2005 U.S. Dist. LEXIS 1159 (D. Minn Jan. 27, 2005) at *21-*23. Statements are required from any and all persons then at Seyfarth Shaw LLP and the responsible person(s) having firsthand knowledge of the circumstances surrounding the protracted delay, after the abandonment date, in seeking revival.

As noted in MPEP 711.03(c)(II), subsection D, in instances in which such petition was not filed within 1 year of the date of abandonment of the application, applicants should include:

> (A) the date that the applicant first became aware of the abandonment of the application; and
> (B) a showing as to how the delay in discovering the abandoned status of the application occurred despite the exercise of due care or diligence on the part of the applicant.

In either instance, applicant's failure to carry the burden of proof to establish that the "entire" delay was "unavoidable" or "unintentional" may lead to the denial of a petition under 37 CFR 1.137(b), regardless of the circumstances that originally resulted in the abandonment of the application. *See also* New York University v. Autodesk, 2007 U.S. DIST LEXIS, U.S.District LEXIS 50832, *10 -*12 (S.D.N.Y. 2007)(protracted delay in seeking revival undercuts assertion of unintentional delay).

Any renewed petition may be addressed as follows:

By Mail: Mail Stop PETITION
Commissioner for Patents
P. O. Box 1450
Alexandria, VA 22313-1450

By hand: U. S. Patent and Trademark Office
Customer Service Window, Mail Stop Petitions
Randolph Building
401 Dulany Street
Alexandria, VA 22314

The centralized facsimile number is **(571) 273-8300.**

Correspondence regarding this decision may also be filed through the electronic filing system of the USPTO.

To expedite consideration, petitioner may wish to contact the undersigned regarding the filing of the renewed petition under 37 CFR 1.137(b).

Telephone inquiries concerning this decision should be directed to the undersigned at (571) 272-3204.

Sherry D. Brinkley
Petitions Examiner
Office of Petitions

UNITED STATES PATENT AND TRADEMARK OFFICE

Commissioner for Patents
United States Patent and Trademark Office
P.O. Box 1450
Alexandria, VA 22313-1450
www.uspto.gov

FRANCIS J. MAGUIRE
WARE, FRESSOLA, VAN DER SLUYS & ADOLPHSON LLP
755 MAIN STREET
P.O. BOX 224
MONROE, CT 06468

COPY MAILED

APR 13 2005

OFFICE OF PETITIONS

ON PETITION

In re Application of
Okhotnikov et al.
Application No. 10/974,533
Filed: October 26, 2004
Attorney Docket No. 915-016.2

This is a decision on the petition filed March 11, 2005, requesting that the above-identified application be accorded a filing date of October 26, 2004. The petition is properly treated as a petition under 37 CFR 1.10(d).

The petition is **DISMISSED AS MOOT**.

When an application is filed under 37 CFR 1.10, the filing date given to the application is the date written for the date-in on the express mail label. The mail label for the instant application has a handwritten date-in of October 27, 2004. For an unknown reason, the application was given a filing date of October 26, 2004. Applicant has wisely filed a petition to ensure the record clearly demonstrates the application was correctly accorded a filing date of October 26, 2004. Applicant has submitted a copy of Express Mail label No. EV 452365016 US showing an incorrect handwritten "date-in" of "October 27, 2004." The same Express Mail receipt number appears on the original "Patent Application Transmittal Letter," which includes the Express Mail label number. The Express Mail label number appears on the Certificate of Mailing by "Express Mail" and includes a statement of express mailing dated October 26, 2004 on the cover page for the application papers. Additionally, applicant has submitted copy of the Track & Confirm record showing that the package in question was accepted on October 26, 2004, at 1:40 p.m. in Botsford, CT.

The evidence establishes the Office acted correctly in according the application a filing date of October 26, 2004. Since the application was accorded a filing date of October 26, 2004, the instant petition to accord a filing date of October 26, 2004, is dismissed as moot.

A petition under 37 CFR 1.10(d) does not require a petition fee. Accordingly, the $130.00 petition fee collected will be refunded by treasury check in due course.

This matter is being referred to the Office of Initial Patent Examination Division for further processing. Thereafter, the matter will be referred to Technology Center 2873 for examination in due course.

Telephone inquiries concerning this matter may be directed Paralegal Liana Chase at (571) 272-3206.

Charles Steven Brantley
Petitions Attorney
Office of Petitions

UNITED STATES PATENT AND TRADEMARK OFFICE

Commissioner for Patents
United States Patent and Trademark Office
P.O. Box 1450
Alexandria, VA 22313-1450
www.uspto.gov

FISH & RICHARDSON PC
P.O. BOX 1022
MINNEAPOLIS MN 55440-1022

COPY MAILED

AUG 18 2009

OFFICE OF PETITIONS

In re Patent No. 7,425,958
Issued: September 16, 2008
Application No. 10/974,547
Filed: October 26, 2004
Attorney Docket No. 07844-0678001 / P632

DECISION ON APPLICATION FOR PATENT TERM ADJUSTMENT

This is a decision on the "APPLICATION FOR PATENT TERM ADJUSTMENT UNDER 37 C.F.R. § 1.705(d)" filed November 14, 2008, requesting that the patent term adjustment determination for the above-identified patent be changed from two hundred ninety-three (293) days to six hundred nineteen (619) days.

The request for reconsideration of patent term adjustment is **DISMISSED**.

On September 16, 2008, the above-identified application matured into US Patent No. 7,425,958 with a patent term adjustment of 293 days. This request for reconsideration of patent term adjustment was timely filed within two months of the issue date of the patent. See 37 CFR 1.705(d).

The Office acknowledges submission of the $200.00 fee set forth in 37 CFR 1.18(e). No additional fees are required.

Patentees request recalculation of the patent term adjustment based on the decision in Wyeth v. Dudas, 580 F. Supp. 2d 138, 88 U.S.P.Q. 2d 1538 (D.D.C. 2008). Patentees assert that in view of the decision in Wyeth, they are "entitled to a total patent term adjustment of 619 days, which includes 326 days of patent term adjustment due to exceeding three year pendency and 402 days due to USPTO delay in prosecution."

The 326-day period is calculated based on the application having been filed under 35 U.S.C. 111(a) on October 26, 2004, and the patent having been issued on September 16, 2008, three years and 326 days later. Patentees assert that in addition to this 326-day period, they are entitled to a period of adjustment due to examination delay pursuant to 37 CFR 1.702(a).

Under 37 CFR 1.703(f), patentees are entitled to a period of patent term adjustment equal to the period of delays based on the grounds set forth in 37 CFR 1.702 reduced by the period of time equal to the period of time during which patentees failed to engage in reasonable efforts to conclude prosecution pursuant to 37 CFR 1.704. In other words, it is the period of Office delay reduced by the period of applicant delay. Patentees do not dispute the period of reduction of 109 days for applicant delay.

Patentees do not dispute that the total period of Office delay is the sum of the period of Three Years Delay (326 days) and the period of Examination Delay (402 days) to the extent that these periods of delay are not overlapping. However, in effect, patentees contend that no portion of the Three Year Delay period overlaps with the examination delay. Accordingly, patentees submit that the total period of adjustment for Office delay is 728 days, which is the sum of the period of Three Year Delay (326 days) and the period of Examination Delay (402 days), reduced by the period of overlap (0 days). As such, patentees assert entitlement to a patent term adjustment of 619 days (326 + 402 reduced by 0 overlap – 109(applicant delay)).

The Office agrees that as of the issuance of the patent on September 16, 2008, the application was pending three years and 326 days after its filing date. The Office agrees that the action detailed above was not taken within the specified time frame, and thus, the entry of a period of adjustment of 402 days is correct. At issue is whether patentees should accrue 326 days of patent term adjustment for the Office taking in excess of three years to issue the patent, as well as 402 days for Office failure to take a certain action within a specified time frame (or examination delay).

The Office contends that 326 days overlap. Patentees' calculation of the period of overlap is inconsistent with the Office's interpretation of this provision. 35 U.S.C. 154(b)(2)(A) limits the adjustment of patent term, as follows:

> to the extent that the periods of delay attributable to grounds specified in paragraph (1) overlap, the period of any adjustment granted under this subsection shall not exceed the actual number of days the issuance of the patent was delayed.

Likewise, 35 CFR 1.703(f) provides that:

> To the extent that periods of delay attributable to the grounds specified in § 1.702 overlap, the period of adjustment granted under this section shall not exceed the actual number of days the issuance of the patent was delayed.

As explained in *Explanation of 37 CFR 1.703(f) and of the United States Patent and Trademark Office Interpretation of 35 U.S.C. 154(b)(2)(A)*, 69 Fed. Reg. 34283 (June 21, 2004), the Office interprets 35 U.S.C. 154(b)(2)(A) as permitting either patent term

adjustment under 35 U.S.C. 154(b)(1)(A)(i)-(iv), or patent term adjustment under 35 U.S.C. 154(b)(1)(B), but not as permitting patent term adjustment under both 35 U.S.C. 154(b)(1)(A)(i)-(iv) and 154(b)(1)(B). Accordingly, the Office implements the overlap provision as follows:

> If an application is entitled to an adjustment under 35 U.S.C. 154(b)(1)(B), the entire period during which the application was pending (except for periods excluded under 35 U.S.C. 154(b)(1)(B)(i)-(iii)), and not just the period beginning three years after the actual filing date of the application, is the period of delay under 35 U.S.C. 154(b)(1)(B) in determining whether periods of delay overlap under 35 U.S.C. 154(b)(2)(A). Thus, any days of delay for Office issuance of the patent more than 3 years after the filing date of the application, which overlap with the days of patent term adjustment accorded prior to the issuance of the patent will not result in any additional patent term adjustment. See 35 U.S.C. 154(b)(1)(B), 35 U.S.C. 154(b)(2)(A), and 37 CFR § 1.703(f). See *Changes to Implement Patent Term Adjustment Under Twenty Year Term; Final Rule*, 65 Fed. Reg. 56366 (Sept. 18, 2000). See also *Revision of Patent Term Extension and Patent Term Adjustment Provisions; Final Rule*, 69 Fed. Reg. 21704 (April 22, 2004), 1282 Off. Gaz. Pat. Office 100 (May 18, 2004). See also *Explanation of 37 CFR 1.703(f) and of the United States Patent and Trademark Office Interpretation of 35 U.S.C. 154(b)(2)(A),* 69 Fed. Reg. 34283 (June 21, 2004).

The current wording of § 1.703(f) was revised in response to the misinterpretation of this provision by a number of Patentees. The rule was slightly revised to more closely track the corresponding language of 35 U.S.C. 154(b)(2)(A). The relevant portion differs only to the extent that the statute refers back to provisions of the statute whereas the rule refers back to sections of the rule. This was not a substantive change to the rule nor did it reflect a change of the Office's interpretation of 35 U.S.C. 154(b)(2)(A). As stated in the *Explanation of 37 CFR 1.703(f) and of the United States Patent and Trademark Office Interpretation of 35 U.S.C. 154(b)(2)(A)*, the Office has consistently taken the position that if an application is entitled to an adjustment under the three-year pendency provision of 35 U.S.C. 154(b)(1)(B), the entire period during which the application was pending before the Office (except for periods excluded under 35 U.S.C. 154(b)(1)(B)(i)-(iii)), and not just the period beginning three years after the actual filing date of the application, is the relevant period under 35 U.S.C. 154(b)(1)(B) in determining whether periods of delay "overlap" under 35 U.S.C. 154(b)(2)(A).

This interpretation is consistent with the statute. Taken together the statute and rule provide that to the extent that periods of delay attributable to grounds specified in 35 U.S.C. 154(b)(1) and in corresponding § 1.702 overlap, the period of adjustment granted shall not exceed the actual number of days the issuance of the patent was delayed. The grounds specified in these sections cover the A) guarantee of prompt Patent and Trademark Office responses, B) guarantee of no more than 3-year

application pendency, and C) guarantee or adjustments for delays due to interference, secrecy orders and appeals. A section by section analysis of 35 U.S.C. 154(b)(2)(A) specifically provides that:

> Section 4402 imposes limitations on restoration of term. In general, pursuant to [35 U.S.C.] 154(b)(2)(A)-(C), total adjustments granted for restorations under [35 U.S.C. 154](b)(1) are reduced as follows: (1) To the extent that there are multiple grounds for extending the term of a patent that may exist simultaneously (e.g., delay due to a secrecy order under [35 U.S.C.] 181 and administrative delay under [35 U.S.C.] 154(b)(1)(A)), the term should not be extended for each ground of delay but only for the actual number of days that the issuance of a patent was delayed; See 145 Cong. Rec. S14,718[1]

As such, the period for over three-year pendency does not overlap only to the extent that the actual dates in the period beginning three years after the date on which the application was filed overlap with the actual dates in the periods for failure of the Office to take action within specified time frames. In other words, consideration of the overlap does not begin three years after the filing date of the application.

In this instance, the relevant period under 35 U.S.C. 154(b)(1)(B) in determining whether periods of delay "overlap" under 35 U.S.C. 154(b)(2)(A) is the entire period during which the application was pending before the Office, October 26, 2004, to the date the patent issued on September 16, 2008. Prior to the issuance of the patent, 402 days of patent term adjustment were accorded for the Office failing to respond within a specified time frame during the pendency of the application. All of the 326 days for Office delay in issuing the patent overlap with the 402 days of Office delay. During that time, the issuance of the patent was delayed by 402 days, not 402 + 326 days. The Office experienced 402 days of examination delay. Otherwise, the Office took all actions set forth in 37 CFR 1.702(a) within the prescribed time frames. Nonetheless, given the 326 days of Office delay and the time allowed within the time frames for processing and examination, as of the date the patent issued, the application was pending three years and 326 days. The Office did not delay 402 days and then an additional 326 days. Accordingly, 402 days of patent term adjustment (not 402 and 326 days) was properly entered since the period of delay of 326 days attributable to the delay in the issuance of the patent overlaps with the adjustment of 402 days attributable to grounds specified in § 1.702(a)(1). Entry of both periods is not warranted. Thus, 402 days is determined to be the actual number of days that the issuance of the patent was delayed, considering the 326 days over three years to the issuance of the patent.

---

[1] The AIPA is title IV of the Intellectual Property and Communications Omnibus Reform Act of 1999 (S. 1948), which was incorporated and enacted as law as part of Pub. L. 106-113. The Conference Report for H.R. 3194, 106th Cong. 1st Sess. (1999), which resulted in Pub. L. 106-113, does not contain any discussion (other than the incorporated language) of S. 1948. A section-by-section analysis of S. 1948, however, was printed in the Congressional Record at the request of Senator Lott, See 145 Cong. Rec. S14,708-26 (1999)(daily ed. Nov. 17, 1999).

Accordingly, at issuance, the Office properly entered 293 days of patent term adjustment.

In view thereof, no adjustment to the patent term will be made.

Telephone inquiries specific to this decision should be directed to Senior Petitions Attorney Patricia Faison-Ball at (571) 272-3212.

Kery A. Fries

Kery A. Fries
Senior Legal Advisor
Office of Patent Legal Administration
Office of Deputy Commissioner
for Examination Policy

UNITED STATES PATENT AND TRADEMARK OFFICE

Commissioner for Patents
United States Patent and Trademark Office
P.O. Box 1450
Alexandria, VA 22313-1450
www.uspto.gov

Kilpatrick Stockton LLP- Adobe Systems, Inc. 58083
Kilpatrick Stockton LLP
1100 Peachtree Street
Atlanta GA 30309-4530

MAILED

JUL 15 2010

OFFICE OF PETITIONS

In re Patent of Reid et al	: DECISION ON REQUEST
Patent No. 7,631,290	: FOR RECONSIDERATION OF
Issued: December 8, 2009	: PATENT TERM ADJUSTMENT
Application No. 10/974,556	: AND
Filed: October 27, 2004	: NOTICE OF INTENT TO ISSUE
Docket No. 58083/375124 (M091)	: CERTIFICATE OF CORRECTION

This is a decision on the petition filed January 21, 2010, which is being treated as a petition under 37 CFR 1.705(d) requesting the patent term adjustment indicated on the above-identified patent be corrected to indicate that the term of the above-identified patent is extended or adjusted by one thousand three hundred sixty-seven (1,367) days.

The petition to correct the patent term adjustment indicated on the above-identified patent to indicate that the term of the above-identified patent is extended or adjusted by one thousand three hundred sixty-seven (1,367) days is **GRANTED to the extent indicated herein**.

The over three year period begins on October 28, 2007 and ends on December 8, 2009 and is 773 (not 772) days. Further, 212 (not 211) days are excluded as appellate period beginning on the date the Notice of Appeal was filed, January 7, 2009, and ending on the day the Notice of Allowance was mailed, August 6, 2009. There is an overlapping period of 28 days, not 157 days. The potential period of overlap begins on May 27, 2008, the day after 36 months from the filing date plus the number of days excluded, and ends on December 8, 2009, the date of issuance of the patent. Only 28 days during the potential period of overlap actually overlaps with any of the "A Delay" period – the period associated with the mailing of the Notice of Allowance on August 6, 2009. *See* 35 U.S.C. 154(b)(1)(B)(i). As such, the patent term adjustment is 1,339, not 1,367 days.

The Office will *sua sponte* issue a certificate of correction. Pursuant to 37 CFR 1.322, the Office will not issue a certificate of correction without first providing assignee or patentee an opportunity to be heard. Accordingly, patentees are given **one (1) month or thirty (30) days**, whichever is longer, from the mail date of this decision to respond. No extensions of time will be granted under 37 CFR 1.136.

The Office acknowledges receipt of the required $200.00 fee set forth in 37 CFR 1.18(e). No additional fees are required.

The application is being forwarded to the Certificates of Correction Branch for issuance of a certificate of correction. The Office will issue a certificate of correction indicating that the term of the above-identified patent is extended or adjusted by **one thousand three hundred thirty-nine (1,339)** days.

Telephone inquiries specific to this matter should be directed to the undersigned at (571) 272-3230.

Shirene Willis Brantley

Shirene Willis Brantley
Senior Petitions Attorney
Office of Petitions

Enclosure: Copy of DRAFT Certificate of Correction

UNITED STATES PATENT AND TRADEMARK OFFICE

CERTIFICATE OF CORRECTION

PATENT : 7,631,290 B1

DATED : **December 8, 2009** **DRAFT**

INVENTOR(S) : Reid et al.

It is certified that error appears in the above-identified patent and that said Letters Patent is hereby corrected as shown below:

On the cover page,

[*] Notice: Subject to any disclaimer, the term of this patent is extended or adjusted under 35 U.S.C. 154(b) by 806 days

Delete the phrase "by 806 days" and insert – by 1339 days--

UNITED STATES PATENT AND TRADEMARK OFFICE

Commissioner for Patents
United States Patent and Trademark Office
P.O. Box 1450
Alexandria, VA 22313-1450
www.uspto.gov

GEORGE R. MCGUIRE
BOND, SCHOENECK & KING, PLLC
ONE LINCOLN CENTER
SYRACUSE, NY 13202

COPY MAILED

JAN 1 2 2005

OFFICE OF PETITIONS

In re Application of: Abby J. Howes	:	
Application No. 10/974,590	:	NOTICE
Filed: October 26, 2004	:	
Attorney Docket No. 100 P 627	:	

This is a notice regarding your request for acceptance of a fee deficiency submission under 37 CFR 1.28. On September 1, 1998, the Court of Appeals for the Federal Circuit held that 37 CFR 1.28(c) is the sole provision governing the time for correction of the erroneous payment of the issue fee as a small entity. **See DH Technology v. Synergystex International, Inc. 154 F.3d 1333, 47 USPQ2d 1865 (Fed. Cir. Sept. 1, 1998).**

The Office no longer investigates or rejects original or reissue applications under 37 CFR 1.56. **1098 Off. Gaz. Pat. Office 502 (January 3, 1989)**. Therefore, nothing in this Notice is intended to imply that an investigation was done.

Your fee deficiency submission under 37 CFR 1.28 is hereby **ACCEPTED**.

This file is being referred to the Office of Initial Patent Examination for further processing.

Inquiries related to this communication should be directed to the undersigned at (571) 272-3226.

Andrea Smith
Petitions Examiner
Office of Petitions
Office of the Deputy Commissioner
for Patent Examination Policy

UNITED STATES PATENT AND TRADEMARK OFFICE

Commissioner for Patents
United States Patent and Trademark Office
P.O. Box 1450
Alexandria, VA 22313-1450
www.uspto.gov

MEADWESTVACO CORPORATION
ATTN: IP LEGAL DEPARTMENT
1021 MAIN CAMPUS DRIVE
RALEIGH, NC 27606

COPY MAILED

FEB 1 9 2009

OFFICE OF PETITIONS

In re Application of	:	
Abby J. Howes	:	
Application No. 10/974,590	:	DECISION ON PETITION
Filed: October 26, 2004	:	
Attorney Docket No. EA20346	:	

This is a decision on the petition under the unintentional provisions of 37 CFR 1.137(b), filed November 13, 2008, to revive the above-identified application.

The petition is **GRANTED**.

The application became abandoned for failure to reply in a timely manner to the Non-Final Office Action mailed, February 1, 2008, which set a shortened statutory period for reply of three (3) months. No extensions of time under the provisions of 37 CFR 1.136 (a) were obtained. Accordingly, the application became abandoned on May 2, 2008.

The petition satisfies the requirements of 37 CFR 1.137(b) in that petitioner has supplied (1) the reply in the form of an Amendment After Non-Final Office Action, (2) the petition fee of $1620, and (3) a proper statement of unintentional delay.

Telephone inquiries concerning this decision should be directed to Denise Williams at (571) 272-8930.

This application is being referred to Technology Center AU 3725 for appropriate action by the Examiner in the normal course of business on the amendment filed with the present petition.

Andrea Smith
Petitions Examiner
Office of Petitions

UNITED STATES PATENT AND TRADEMARK OFFICE

Commissioner for Patents
United States Patent and Trademark Office
P.O. Box 1450
Alexandria, VA 22313-1450
www.uspto.gov

MOTOROLA INC
600 NORTH US HIGHWAY 45
W4 - 39Q
LIBERTYVILLE IL 60048-5343

MAILED

JUN 23 2009

OFFICE OF PETITIONS

In re Application of	:	
Stephen A. HOWELL et al.	:	
Application No. 10/974,625	:	DECISION ON PETITION
Filed: October 27, 2004	:	
Attorney Docket No. CS25241RL	:	

This is a decision on the petition under the unintentional provisions of 37 CFR 1.137(b), filed May 26, 2009, to revive the above-identified application.

The petition is **GRANTED**.

The application became abandoned for failure to reply in a timely manner to the non-final Office action mailed, June 02, 2008 which set a shortened statutory period for reply of three (3) month. No extensions of time under the provisions of 37 CFR 1.136(a) were obtained. Accordingly, the application became abandoned on September 03, 2008.

The petition satisfies the requirements of 37 CFR 1.137(b) in that petitioner has supplied (1) the reply in the form of an amendment; (2) the petition fee of $1,620.00; and (3) a proper statement of unintentional delay. Accordingly, the reply to the non-final Office action of June 02, 2008 is accepted as having been unintentionally delayed.

Telephone inquiries concerning this decision should be directed to the undersigned at (571) 272- 4231.

The application file is being referred to Technology Center AU 2617 for appropriate action on the concurrently filed amendment.

Michelle R. Eason

Michelle R. Eason
Paralegal Specialist
Office of Petitions

UNITED STATES PATENT AND TRADEMARK OFFICE

COMMISSIONER FOR PATENTS
UNITED STATES PATENT AND TRADEMARK OFFICE
P.O. BOX 1450
ALEXANDRIA, VA 22313-1450
www.uspto.gov

HEWLETT PACKARD COMPANY
P O BOX 272400, 3404 E. HARMONY ROAD
INTELLECTUAL PROPERTY ADMINISTRATION
FORT COLLINS, CO 80527-2400

COPY MAILED
JUN 14 2006
OFFICE OF PETITIONS

In re Application of
Gregory S. Snider, et al.
Application No. 10/974,660
Filed: October 27, 2004
Attorney Docket No. 200405711-1

ON PETITION

This is a decision on the petition under 37 CFR 1.313, filed June 13, 2006, requesting that the above-identified application be withdrawn from issue.

The petition is DISMISSED AS MOOT.

A review of the record discloses that a Notice of Allowance and Issue Fee Due was mailed on May 17, 2006. Since the Request for Continued Examination (RCE) under 37 CFR 1.114 was filed within the period set for paying the issue fee, a petition to withdraw the application from issue under 37 CFR 1.313 is not necessary.

The application is being referred to Technology Center AU 2819 for processing the RCE filed June 13, 2006.

Telephone inquiries should be directed to the undersigned at (571) 272-3204.

Sherry D. Brinkley
Petitions Examiner
Office of Petitions

UNITED STATES PATENT AND TRADEMARK OFFICE

UNITED STATES DEPARTMENT OF COMMERCE
United States Patent and Trademark Office
Address: COMMISSIONER FOR PATENTS
P.O. Box 1450
Alexandria, Virginia 22313-1450
www.uspto.gov

FULBRIGHT & JAWORSKI, LLP
666 FIFTH AVE
NEW YORK, NY 10103-3198

Mail Date: 04/21/2010

Applicant	: Koichi Kugo	: DECISION ON REQUEST FOR
Patent Number	: 7602523	: RECALCULATION of PATENT
Issue Date	: 10/13/2009	: TERM ADJUSTMENT IN VIEW
Appliction No	: 10/974,665	: OF WYETH AND NOTICE OF INTENT TO
Filed	: 10/26/2004	: ISSUE CERTIFICATE OF CORRECTION
		:

The Request for Recalculation is **GRANTED** to the extent indicated.

The patent term adjustment has been determined to be **1182** days. The USPTO will *sua sponte* issue a certificate of correction reflecting the amount of PTA days determined by the recalculation.

Prior to the issuance of the certificate of correction, the USPTO will afford patentee an opportunity to be heard and request reconsideration. Accordingly, patentee has **one month or thirty (30) days**, whichever is longer, to file a request for reconsideration of this patent term adjustment calculation. See 35 U.S.C. 154(b)(3)(B)(ii) and 37 CFR 1.322(a)(4). No extensions of time will be granted under 37 CFR 1.136.

Patentee should use document code PET.OP if electronically filing a request for reconsideration of this patent term adjustment calculation. The patentee must also include the information required by 37 CFR 1.705(b)(2) and the fee required by 37 CFR 1.18(e). If patentee does not file a timely request for reconsideration of this patent term adjustment calculation including the information required by 37 CFR 1.705(b)(2) and the fee required by 37 CFR 1.18(e), the USPTO will issue a certificate of correction reflecting the PTA determination noted above.

Patentee should be aware that in order to preserve the right to review in the United States District Court for the District of Columbia of the USPTO patent term adjustment determination, patentee must ensure that he or she also take the steps required under 35 U.S.C. 154(b)(4)(A) in a timely manner. Nothing in the request for recalculation should be construed as providing an alternative time frame for commencing a civil action under 35 U.S.C. 154(b)(4)(A).

Any questions concerning this decision should be directed to the Office of Patent Legal Administration at 571-272-7702.

UNITED STATES PATENT AND TRADEMARK OFFICE

UNITED STATES DEPARTMENT OF COMMERCE
United States Patent and Trademark Office
Address: COMMISSIONER FOR PATENTS
P.O. Box 1450
Alexandria, Virginia 22313-1450
www.uspto.gov

BIRCH STEWART KOLASCH & BIRCH
PO BOX 747
FALLS CHURCH, VA 22040-0747

Mail Date: 04/20/2010

Applicant	: Joel Bougaret	: DECISION ON REQUEST FOR
Patent Number	: 7595335	: RECALCULATION of PATENT
Issue Date	: 09/29/2009	: TERM ADJUSTMENT IN VIEW
Appliction No	: 10/974,675	: OF WYETH AND NOTICE OF INTENT TO
Filed	: 10/28/2004	: ISSUE CERTIFICATE OF CORRECTION
		:

The Request for Recalculation is **GRANTED** to the extent indicated.

The patent term adjustment has been determined to be **922** days. The USPTO will *sua sponte* issue a certificate of correction reflecting the amount of PTA days determined by the recalculation.

Prior to the issuance of the certificate of correction, the USPTO will afford patentee an opportunity to be heard and request reconsideration. Accordingly, patentee has **one month or thirty (30) days**, whichever is longer, to file a request for reconsideration of this patent term adjustment calculation. See 35 U.S.C. 154(b)(3)(B)(ii) and 37 CFR 1.322(a)(4). No extensions of time will be granted under 37 CFR 1.136.

Patentee should use document code PET.OP if electronically filing a request for reconsideration of this patent term adjustment calculation. The patentee must also include the information required by 37 CFR 1.705(b)(2) and the fee required by 37 CFR 1.18(e). If patentee does not file a timely request for reconsideration of this patent term adjustment calculation including the information required by 37 CFR 1.705(b)(2) and the fee required by 37 CFR 1.18(e), the USPTO will issue a certificate of correction reflecting the PTA determination noted above.

Patentee should be aware that in order to preserve the right to review in the United States District Court for the District of Columbia of the USPTO patent term adjustment determination, patentee must ensure that he or she also take the steps required under 35 U.S.C. 154(b)(4)(A) in a timely manner. Nothing in the request for recalculation should be construed as providing an alternative time frame for commencing a civil action under 35 U.S.C. 154(b)(4)(A).

Any questions concerning this decision should be directed to the Office of Patent Legal Administration at 571-272-7702.

UNITED STATES PATENT AND TRADEMARK OFFICE

UNITED STATES DEPARTMENT OF COMMERCE
United States Patent and Trademark Office
Address: COMMISSIONER FOR PATENTS
P.O. Box 1450
Alexandria, Virginia 22313-1450
www.uspto.gov

WOOD, PHILLIPS, KATZ, CLARK & MORTIMER
500 W. MADISON STREET
SUITE 3800
CHICAGO, IL 60661

Mail Date: 04/21/2010

Applicant	: James Lyle Hazen	: DECISION ON REQUEST FOR
Patent Number	: 7651977	: RECALCULATION of PATENT
Issue Date	: 01/26/2010	: TERM ADJUSTMENT IN VIEW
Appliction No	: 10/974,711	: OF WYETH AND NOTICE OF INTENT TO
Filed	: 10/28/2004	: ISSUE CERTIFICATE OF CORRECTION
		:

The Request for Recalculation is **GRANTED** to the extent indicated.

The patent term adjustment has been determined to be **78** days. The USPTO will *sua sponte* issue a certificate of correction reflecting the amount of PTA days determined by the recalculation.

Prior to the issuance of the certificate of correction, the USPTO will afford patentee an opportunity to be heard and request reconsideration. Accordingly, patentee has **one month or thirty (30) days**, whichever is longer, to file a request for reconsideration of this patent term adjustment calculation. See 35 U.S.C. 154(b)(3)(B)(ii) and 37 CFR 1.322(a)(4). No extensions of time will be granted under 37 CFR 1.136.

Patentee should use document code PET.OP if electronically filing a request for reconsideration of this patent term adjustment calculation. The patentee must also include the information required by 37 CFR 1.705(b)(2) and the fee required by 37 CFR 1.18(e). If patentee does not file a timely request for reconsideration of this patent term adjustment calculation including the information required by 37 CFR 1.705(b)(2) and the fee required by 37 CFR 1.18(e), the USPTO will issue a certificate of correction reflecting the PTA determination noted above.

Patentee should be aware that in order to preserve the right to review in the United States District Court for the District of Columbia of the USPTO patent term adjustment determination, patentee must ensure that he or she also take the steps required under 35 U.S.C. 154(b)(4)(A) in a timely manner. Nothing in the request for recalculation should be construed as providing an alternative time frame for commencing a civil action under 35 U.S.C. 154(b)(4)(A).

Any questions concerning this decision should be directed to the Office of Patent Legal Administration at 571-272-7702.

SPE RESPONSE FOR CERTIFICATE OF CORRECTION

Paper No.: _____

DATE : 8/27/07

TO SPE OF : **Technology Center** 2856 10/974724

SUBJECT : Request for Certificate of Correction on Patent No.: 7072180 B2

A response is requested with respect to the accompanying request for a certificate of correction.

Please complete this form and return with file, within 7 days to:

Palm location **7580, Certificates of Correction Branch – South Tower – 9A22**

If response is for an IFW, **return to employee (named below) via PUBSCofC Team in MADRAS.**

With respect to the change(s) requested, correcting Office and/or Applicant's errors, should the patent read as shown in the certificate of correction (COCIN)? No new matter should be introduced, nor should the scope or meaning of the claims be changed.

Thank You For Your Assistance

Elisha Evans
Certificates of Correction Branch
Tel. No. 703-308-9390 EXT 110

The request for issuing the above-identified correction(s) is hereby:

Note your decision on the appropriate box.

- ☒ **Approved** — **All** changes apply.
- ☐ **Approved in Part** — Specify below which changes **do not** apply.
- ☐ **Denied** — State the reasons for denial below.

Comments:

HEZRON WILLIAMS
SUPERVISORY PATENT EXAMINER
TECHNOLOGY CENTER 2800

SPE — **Art Unit** 2856

UNITED STATES PATENT AND TRADEMARK OFFICE

Commissioner for Patents
United States Patent and Trademark Office
P.O. Box 1450
Alexandria, VA 22313-1450
www.uspto.gov
DIW Mar-06

SILVERBROOK RESEARCH PTY LTD
393 DARLING STREET
BALMAIN NSW 2-041
AUSTRALIA

COPY MAILED

MAR 29 2006

OFFICE OF PETITIONS

In re Application of	:	
Kia Silverbrook	:	DECISION ON PETITION
Application No. 10/974,729	:	UNDER 37 CFR 1.78(a)(3)
Filed: 28 October, 2004	:	
Atty Docket No. ZE040US	:	

This is a decision in reference to the petition under 37 CFR §§ 1.78(a)(3), filed on 27 February, 2006, to accept an unintentionally delayed claim under 35 U.S.C. §§ 120 for the benefit of the prior-filed nonprovisional application set forth in the petition.

The petition is **GRANTED**.

A petition for acceptance of a claim for late priority under 37 CFR 1.78(a)(3) is only applicable to those applications filed on or after November 29, 2000. Further, the petition is appropriate only after the expiration of the period specified in 37 CFR 1.78(a)(2)(ii). In addition, the petition under 37 CFR 1.78(a)(3) must be accompanied by:

> **(1)** the reference required by 35 U.S.C. § 120 and 37 CFR 1.78(a)(2)(i) of the prior-filed application, unless previously submitted;
> **(2)** the surcharge set forth in § 1.17(t); and
> **(3)** a statement that the entire delay between the date the claim was due under 37 CFR 1.78(a)(2)(ii) and the date the claim was filed was unintentional. The Commissioner may require additional information where there is a question whether the delay was unintentional.

The instant nonprovisional application was filed after November 29, 2000, and the claim herein for the benefit of priority to the prior-filed nonprovisional application is submitted after

expiration of the period specified in 37 CFR 1.78(a)(2)(ii). Therefore, this is a proper petition under 37 CFR 1.78(a)(3).

The petition complies with the requirements for a grantable petition under 37 CFR 1.78(a)(3) in that (1) a reference to the prior-filed nonprovisional application has been included in an amendment to the first sentence of the specification following the title, as provided by 37 CFR 1.78(a)(2)(iii); (2) the surcharge fee required by 37 CFR 1.17(t) has been submitted; and (3) the petition contains a proper statement of unintentional delay. Accordingly, having found that the instant petition for acceptance of an unintentionally delayed claim for the benefit of priority under 35 U.S.C. § 120 to the prior-filed nonprovisional application satisfies the conditions of 37 CFR 1.78(a)(3), the petition is granted.

The granting of the petition to accept the delayed benefit claim to the prior-filed application(s) under 37 CFR 1.78(a)(3) should not be construed as meaning that the instant application is entitled to the benefit of the prior-filed application(s). In order for the instant application to be entitled to the benefit of the prior-filed application(s), all other requirements under 35 U.S.C. § 120 and 37 CFR 1.78(a)(1) and (a)(2) must be met. Similarly, the fact that the corrected Filing Receipt accompanying this decision on petition includes the prior-filed application(s) should not be construed as meaning that applicant is entitled to the claim for benefit of priority to the prior-filed application(s) noted thereon. Accordingly, the examiner will, in due course, consider this benefit claim and determine whether the instant application is entitled to the benefit of the earlier filing date.

A corrected Filing Receipt, which includes the priority claim to the prior-filed nonprovisional application, accompanies this decision on petition.

Any inquiries concerning this decision may be directed to Senior Petitions Attorney Douglas I. Wood at (571) 272-3231. All other inquiries concerning either the examination procedures or status of the application should be directed to the Technology Center.

Frances Hicks

Frances M. Hicks
Lead Paralegal
Office of Petitions

Encl: Corrected Filing Receipt

UNITED STATES PATENT AND TRADEMARK OFFICE

Commissioner for Patents
United States Patent and Trademark Office
P.O. Box 1450
Alexandria, VA 22313-1450
www.uspto.gov

MAIL

NOV 20 2007

DIRECTOR'S OFFICE
TECHNOLOGY CENTER 2600

FITZPATRICK CELLA HARPER & SCINTO
30 ROCKEFELLER PLAZA
NEW YORK NY 10112

In re Application of MASUMURA, TAKAHIRO, et al. Application No. 10/974,732 Filed: October 28, 2004 Attorney Docket No. 02975.103034	DECISION ON REQUEST TO PARTICIPATE IN PATENT PROSECUTION HIGHWAY PILOT PROGRAM AND PETITION TO MAKE SPECIAL UNDER 37 CFR 1.102(d)

This is a decision on the request to participate in the Patent Prosecution Highway (PPH) pilot program and the petition under 37 CFR 1.102(d), filed November 7, 2007, to make the above-identified application special.

The request and petition are **GRANTED**.

A grantable request to participate in the PPH pilot program and petition to make special require:

(1) The U.S. application must validly claim priority under 35 U.S.C. 119(a) to one or more applications filed in the JPO;
(2) Applicant must submit a copy of the allowable/patentable claim(s) from the JPO application(s) along with an English translation thereof and a statement that the English translation is accurate;
(3) All the claims in the U.S. application must sufficiently correspond or be amended to sufficiently correspond to the allowable/patentable claim(s) in the JPO application(s);
(4) Examination of the U.S. application has not begun;
(5) Applicant must submit a copy of all the office actions from each of the JPO application(s) containing the allowable/patentable claim(s) along with an English translation thereof and a statement that the English translation is accurate;
(6) Applicant must submit an IDS listing the documents cited by the JPO examiner in the JPO office action along with copies of documents except U.S. patents or U.S. patent application publications; and
(7) The required petition fee under 37 CFR 1.17(h).

The request to participate in the PPH pilot program and petition comply with the above requirements. Accordingly, the above-identified application has been accorded "special" status.

Telephone inquiries concerning this decision should be directed to Kenneth Wieder at 571-272-2986.

All other inquiries concerning the examination or status of the application should be directed to Patent Application Information Retrieval (PAIR) system.

The application is being forwarded to the examiner for action on the merits commensurate with this decision.

Kenneth A. Wieder

Kenneth Wieder
Quality Assurance Specialist
Technology Center 2600
Communications

UNITED STATES PATENT AND TRADEMARK OFFICE

Commissioner for Patents
United States Patent and Trademark Office
P.O. Box 1450
Alexandria, VA 22313-1450
www.uspto.gov

FITZPATRICK CELLA HARPER & SCINTO
30 ROCKEFELLER PLAZA
NEW YORK, NY 10112

COPY MAILED

FEB 07 2008

OFFICE OF PETITIONS

In re Application of :
Takahiro Masumura et al :
Application No. 10/974,732 :
Filed: October 28, 2004 :
Attorney Docket No. 02975.103034

ON PETITION

This is a decision on the petition, filed February 5, 2008 under 37 CFR 1.313(c)(2) to withdraw the above-identified application from issue after payment of the issue fee.

The petition is **GRANTED**.

The above-identified application is withdrawn from issue for consideration of a submission under 37 CFR 1.114 (request for continued examination). See 37 CFR 1.313(c)(2).

Petitioner is advised that the issue fee paid on January 18, 2008 in the above-identified application cannot be refunded. If, however, the above-identified application is again allowed, petitioner may request that it be applied towards the issue fee required by the new Notice of Allowance.[1]

Telephone inquiries should be directed to Irvin Dingle at (571) 272-3210.

This matter is being referred to Technology Center AU 2624 for processing of the request for continued examination under 37 CFR 1.114 and for consideration of the concurrently filed amendment.

Irvin Dingle
Petitions Examiner
Office of Petitions

---

[1] The request to apply the issue fee to the new Notice may be satisfied by completing and returning the new Issue Fee Transmittal Form PTOL-85(b), which includes the following language thereon: Commissioner for Patents is requested to apply the Issue Fee and Publication Fee (if any) or re-apply any previously paid issue fee to the application identified above. Petitioner is advised that, whether a fee is indicated as being due or not, the Issue Fee Transmittal Form must be completed and timely submitted to avoid abandonment. Note the language in bold text on the first page of the Notice of Allowance and Fee(s) Due (PTOL-85).

UNITED STATES PATENT AND TRADEMARK OFFICE

Commissioner for Patents
United States Patent and Trademark Office
P.O. Box 1450
Alexandria, VA 22313-1450
www.uspto.gov

SILVERBROOK RESEARCH PTY LTD
393 DARLING STREET
BALMAIN 2041 AU AUSTRALIA

COPY MAILED
MAR 05 2010

In re Application of	:	
Silverbrook et al.	:	
Application No. 10/974,742	:	DECISION ON PETITION
Filed: October 28, 2004	:	
Attorney Docket No. NPP058US	:	

This is a decision on the petition under the unintentional provisions of 37 CFR 1.137(b), filed December 29, 2009, to revive the above-identified application.

The petition is **GRANTED**.

This application became abandoned for failure to timely submit Corrected Drawings on or before November 6, 2009, as required by the Notice of Allowability mailed August 6, 2009. Accordingly, the date of abandonment of this application is November 7, 2009. A Notice of Abandonment was mailed November 23, 2009.

The petition satisfies the requirements of 37 CFR 1.137(b) in that petitioner has supplied (1) the reply in the form of Corrected Drawings; (2) the petition fee of $1,620.00; and (3) a proper statement of unintentional delay.

Telephone inquiries concerning this decision should be directed to the undersigned at (571) 272-7751.

This application is being referred to the Office of Data Management for processing into a patent and review of the Corrected Drawings submitted on December 29, 2009.

Joan Olszewski

Joan Olszewski
Petitions Examiner
Office of Petitions

UNITED STATES PATENT AND TRADEMARK OFFICE

Commissioner for Patents
United States Patent and Trademark Office
P.O. Box 1450
Alexandria, VA 22313-1450
www.uspto.gov

COPY MAILED
SEP 22 2006
OFFICE OF PETITIONS

SILVERBROOK RESEARCH PTY LTD
393 DARLING STREET
BALMAIN NSW 2-041 AUSTRALIA

In re Application of	:
David William Jensen	:
Application No. 10/974,754	: DECISION ON PETITION
Filed: October 28, 2004	: UNDER 37 CFR 1.78(a)(3)
Attorney Docket No. BAL105US	:

This is a decision on the petition under 37 CFR 1.78(a)(3), filed June 12, 2006, to accept an unintentionally delayed claim under 35 U.S.C. § 120 for the benefit of priority to the prior-filed nonprovisional applications set forth in the amendment filed with the petition.

The petition is **GRANTED**.

A petition for acceptance of a claim for late priority under 37 CFR 1.78(a)(3) is only applicable to those applications filed on or after November 29, 2000. Further, the petition is appropriate only after the expiration of the period specified in 37 CFR 1.78(a)(2)(ii). In addition, the petition under 37 CFR 1.78(a)(3) must be accompanied by:

(1) the reference required by 35 U.S.C. § 120 and 37 CFR 1.78(a)(2)(i) of the prior-filed applications, unless previously submitted;
(2) the surcharge set forth in § 1.17(t); and
(3) a statement that the entire delay between the date the claim was due under 37 CFR 1.78(a)(2)(ii) and the date the claim was filed was unintentional. The Director may require additional information where there is a question whether the delay was unintentional.

All of the above requirements having been satisfied, the late claim for priority under 35 U.S.C. § 120 is accepted as being unintentionally delayed.

The granting of the petition to accept the delayed benefit claim to the prior-filed applications under 37 CFR 1.78(a)(3) should not be construed as meaning that this application is entitled to the benefit of the prior-filed applications. In order for this application to be entitled to the benefit of the prior-filed applications, all other requirements under 35 U.S.C. § 120 and 37 CFR 1.78(a)(1) and (a)(2) must be met. Similarly, the fact that the corrected Filing Receipt accompanying this decision on petition includes the prior-filed applications should not be construed as meaning that applicant is entitled to the claim for benefit of priority to the prior-

filed applications noted thereon. Accordingly, the examiner will, in due course, consider this benefit claim and determine whether the application is entitled to the benefit of the earlier filing date.

A corrected Filing Receipt, which includes the priority claim to the prior-filed nonprovisional applications, accompanies this decision on petition.

Any inquiries concerning this decision may be directed to Charlema Grant at (571) 272-3215. All other inquiries concerning either the examination procedures or status of the application should be directed to the Technology Center.

This application is being forwarded to Technology Center Art Unit 3653 for consideration by the examiner of applicant's entitlement to claim benefit of priority under 35 U.S.C. § 120 to the prior-filed applications.

Frances Hicks

Frances Hicks
Petitions Examiner
Office of Petitions

ATTACHMENT: Corrected Filing Receipt

UNITED STATES PATENT AND TRADEMARK OFFICE

UNITED STATES DEPARTMENT OF COMMERCE
United States Patent and Trademark Office
Address: COMMISSIONER FOR PATENTS
P.O. Box 1450
Alexandria, Virginia 22313-1450
www.uspto.gov

APPL NO.	FILING OR 371 (c) DATE	ART UNIT	FIL FEE REC'D	ATTY.DOCKET NO	DRAWINGS	TOT CLMS	IND CLMS
10/974,754	10/28/2004	2853	790	BAL105US	5	8	1

CONFIRMATION NO. 5639

24011
SILVERBROOK RESEARCH PTY LTD
393 DARLING STREET
BALMAIN, 2041
AUSTRALIA

FILING RECEIPT

OC000000014690998

OC000000014690998

Date Mailed: 12/08/2004

Receipt is acknowledged of this regular Patent Application. It will be considered in its order and you will be notified as to the results of the examination. Be sure to provide the U.S. APPLICATION NUMBER, FILING DATE, NAME OF APPLICANT, and TITLE OF INVENTION when inquiring about this application. Fees transmitted by check or draft are subject to collection. Please verify the accuracy of the data presented on this receipt. **If an error is noted on this Filing Receipt, please write to the Office of Initial Patent Examination's Filing Receipt Corrections, facsimile number 703-746-9195. Please provide a copy of this Filing Receipt with the changes noted thereon. If you received a "Notice to File Missing Parts" for this application, please submit any corrections to this Filing Receipt with your reply to the Notice. When the USPTO processes the reply to the Notice, the USPTO will generate another Filing Receipt incorporating the requested corrections (if appropriate).**

Applicant(s)

David William Jensen, Balmain, AUSTRALIA;

Power of Attorney: None

Domestic Priority data as claimed by applicant

This application is a CON of 10/693,876 10/28/2003

Foreign Applications

AUSTRALIA PR3153 02/19/2001

If Required, Foreign Filing License Granted: 12/07/2004

The country code and number of your priority application, to be used for filing abroad under the Paris Convention, is US10/974,754

Projected Publication Date: 03/17/2005

Non-Publication Request: No

Early Publication Request: No

Title

Method of feeding porous sheets of media from media stack

Preliminary Class

347

LICENSE FOR FOREIGN FILING UNDER
Title 35, United States Code, Section 184
Title 37, Code of Federal Regulations, 5.11 & 5.15

GRANTED

The applicant has been granted a license under 35 U.S.C. 184, if the phrase "IF REQUIRED, FOREIGN FILING LICENSE GRANTED" followed by a date appears on this form. Such licenses are issued in all applications where the conditions for issuance of a license have been met, regardless of whether or not a license may be required as set forth in 37 CFR 5.15. The scope and limitations of this license are set forth in 37 CFR 5.15(a) unless an earlier license has been issued under 37 CFR 5.15(b). The license is subject to revocation upon written notification. The date indicated is the effective date of the license, unless an earlier license of similar scope has been granted under 37 CFR 5.13 or 5.14.

This license is to be retained by the licensee and may be used at any time on or after the effective date thereof unless it is revoked. This license is automatically transferred to any related applications(s) filed under 37 CFR 1.53(d). This license is not retroactive.

The grant of a license does not in any way lessen the responsibility of a licensee for the security of the subject matter as imposed by any Government contract or the provisions of existing laws relating to espionage and the national security or the export of technical data. Licensees should apprise themselves of current regulations especially with respect to certain countries, of other agencies, particularly the Office of Defense Trade Controls, Department of State (with respect to Arms, Munitions and Implements of War (22 CFR 121-128)); the Office of Export Administration, Department of Commerce (15 CFR 370.10 (j)); the Office of Foreign Assets Control, Department of Treasury (31 CFR Parts 500+) and the Department of Energy.

NOT GRANTED

No license under 35 U.S.C. 184 has been granted at this time, if the phrase "IF REQUIRED, FOREIGN FILING LICENSE GRANTED" DOES NOT appear on this form. Applicant may still petition for a license under 37 CFR 5.12, if a license is desired before the expiration of 6 months from the filing date of the application. If 6 months has lapsed from the filing date of this application and the licensee has not received any indication of a secrecy order under 35 U.S.C. 181, the licensee may foreign file the application pursuant to 37 CFR 5.15(b).

PMG160C Continuity and Foreign Priority - 10974754

File Edit Options Window Help

Insert Continuity | Disclaim | Remove | Change | Insert Foreign | Accept | Reject

Domestic Continuity

Child Application Number	Cont Code	Parent Application Number	Parent Filing Date	Parent Status	Parent Patent	IN	Seq No.
B/4 10974754	CON	10693876	10/28/2003	PATENTED	6834851	N	1
10693876	CON	10309226	12/04/2002	PATENTED	6648321	N	2
10309226	CON	10052424	01/23/2002	PATENTED	6568670	N	3

After

Foreign Priority

Cntry Code	Country/Receiving Office Name	Foreign/PCT Application	Filing Date	Seq No.
B/4 AU	AUSTRALIA	PR3153	02/19/2001	1

(*) - Request to retrieve electronic copy of foreign priority from participating receiving offices

Print Screen | carant3 | 09/17/2006

Before

UNITED STATES PATENT AND TRADEMARK OFFICE

UNITED STATES DEPARTMENT OF COMMERCE
United States Patent and Trademark Office
Address: COMMISSIONER FOR PATENTS
P.O. Box 1450
Alexandria, Virginia 22313-1450
www.uspto.gov

BIBDATASHEET

Bib Data Sheet

CONFIRMATION NO. 5639

SERIAL NUMBER	FILING OR 371(c) DATE	CLASS	GROUP ART UNIT	ATTORNEY DOCKET NO.
10/974,754	10/28/2004 RULE	271	3653	BAL105US

APPLICANTS

David William Jensen, Balmain, AUSTRALIA;

**** CONTINUING DATA ****************************

This application is a CON of 10/693,876 10/28/2003 PAT 6,834,851

**** FOREIGN APPLICATIONS ***********************

AUSTRALIA PR3153 02/19/2001

IF REQUIRED, FOREIGN FILING LICENSE GRANTED

** 12/07/2004

		STATE OR COUNTRY	SHEETS DRAWING	TOTAL CLAIMS	INDEPENDENT CLAIMS
Foreign Priority claimed 35 USC 119 (a-d) conditions met Verified and Acknowledged	☐ yes ☐ no ☐ yes ☐ no ☐ Met after Allowance Examiner's Signature Initials	AUSTRALIA	5	8	1

ADDRESS

AIR MAIL

24011

TITLE

Method of feeding porous sheets of media from media stack

FILING FEE RECEIVED		
790	FEES: Authority has been given in Paper No. _____ to charge/credit DEPOSIT ACCOUNT No. _____ for following:	☐ All Fees ☐ 1.16 Fees (Filing) ☐ 1.17 Fees (Processing Ext. of time) ☐ 1.18 Fees (Issue) ☐ Other _____ ☐ Credit

Amendments to the Specification:

The paragraph beginning at Page 1, lines 4-9, is to be amended as follows:

The present application is a continuation of US Application Serial No. 10/693,876 filed on October 28, 2003, now issued as US Patent No. 6,834,851, which is a continuation of US Application No. 10/309,226 filed on December 4, 2002, now issued as Patent No. 6,648,321, which is a continuation of US Application No. 10/052,424 filed on January 23, 2002, now issued as Patent No. 6,568,670~~, the entire contents of which are herein incorporated by reference~~.

10/974,754

OIPE IAP68
JUN 1 2 2006
PATENT & TRADEMARK OFFICE

COPY

Petition to Accept an Unintentionally Delayed Claim under 35 U.S.C. 120

The Applicant hereby petitions to accept an unintentionally delayed claim under 35 U.S.C. 120 for the benefit of a prior-filed application in accordance with 37 C.F.R. 1.78(a)(3).

- With respect to 37 C.F.R. 1.78(a)(3)(i), the reference required by 35 U.S.C. 120 and 37 C.F.R. 1.78(a)(2) is being concurrently filed herewith;
- With respect to 37 C.F.R. 1.78(a)(3)(ii), the surcharge set forth in 37 C.F.R. 1.17(t) is being submitted herewith (US$1,370.00); and
- With respect to 37 C.F.R. 1.78(a)(3)(iii), it is submitted that the entire delay between the date the claim was due under 37 C.F.R. 1.78(a)(2)(ii) and the date the claim is being filed concurrently herewith was unintentional.

It is hereby submitted that this petition is timely filed and meets the priority claim referred to by the Examiner in the Office Action dated March 23, 2005.

Very respectfully,

Applicant: D Jensen

DAVID WILLIAM JENSEN

C/o: Silverbrook Research Pty Ltd
393 Darling Street
Balmain NSW 2041, Australia

Email: kia.silverbrook@silverbrookresearch.com
Telephone: +612 9818 6633
Facsimile: +61 2 9555 7762

UNITED STATES PATENT AND TRADEMARK OFFICE

Commissioner for Patents
United States Patent and Trademark Office
P.O. Box 1450
Alexandria, VA 22313-1450
www.uspto.gov

SILVERBROOK RESEARCH PTY LTD
393 DARLING STREET
BALMAIN 2041 AU AUSTRALIA

COPY MAILED

SEP 19 2005

OFFICE OF PETITIONS

In re Application of
King and Silverbrook
Application No. 10/974,766
Filed: October 28, 2004
Attorney Docket No. **ZF038US**

ON PETITION

This is a decision on the petition under 37 CFR 1.78(a)(3), filed June 20, 2005, to accept an unintentionally delayed claim under 35 U.S.C §120 for the benefit of priority to the prior –filed non-provisional application set forth in the amendment filed concurrently with the instant petition.

The petition under 37 CFR 1.78(a)(3) is **GRANTED**.

A petition for acceptance of a claim for late priority under 37 CFR 1.78(a)(3) is only applicable to those applications filed on, or after, November 29, 2000. Further, the petition is appropriate only after the expiration of the period specified in 37 CFR 1.78(a)(2)(ii). In addition, the petition under 37 CFR 1.78(a)(3) must be accompanied by:

1. the reference required by 35 U.S.C § 120 and 37 CFR § 1.78(a)(2)(i) of the prior-filed application, unless previously submitted;

2. the surcharge set forth in § 1.17(t), and

3. a statement that the entire delay between the date the claim was due under 37 CFR 1.78(a)(2)(ii) and the date the claim was filed was unintentional. The Commissioner may require additional information where there is a question whether the delay was unintentional.

The instant pending application was filed on October 28, 2004, and was pending at the time of the filing of the instant petition. A reference to the prior-filed nonprovisional application has been included in an amendment to the first page of the specification, as required by 37 CFR 1.78(a)(2)(iii).

The instant nonprovisional application was filed after November 29, 2000, and the claim herein for the benefit of priority to the prior-filed application is submitted after the expiration of the period specified in 37 CFR 1.78(a)(2)(ii). Also, the reference to the prior filed application was submitted during the pendency of the instant nonprovisional application for which the claim for benefit of priority is sought. See 35 U.S.C. § 120. Accordingly, having found that the instant petition for acceptance of an unintentionally delayed claim for benefit of priority under 35 U.S.C. § 120 to the prior-filed non-provisional application satisfies the conditions of 37 CFR 1.78(a)(3), the petition is granted.

The granting of the petition to accept the delayed benefit claim to the prior-filed application under 37 CFR 1.78(a)(3) should not be construed as meaning the instant application is entitled to the benefit of the prior-filed application. In order for the instant application to be entitled to the benefit of the prior-filed application, all other requirements under 35 U.S.C. § 120 and 37 CFR 1.78(a)(1) and (a)(2) must be met. Similarly, the fact that the corrected Filing Receipt accompanying this decision on petition includes the prior-filed application should not be construed as meaning that applicant is entitled to the claim for benefit of priority to the prior-filed application noted thereon. Accordingly, the examiner will, in due course, consider this benefit claim and determine whether the instant application is entitled to the benefit of the earlier filing date.

A corrected Filing Receipt, which includes the priority claim to the prior-filed application, accompanies this decision on petition.

Any inquiries concerning this decision may be directed to Kenya A. McLaughlin, Petitions Attorney, at (571) 272-3222.

This matter is being referred to Technology Center 2800, Art Unit 2854 for appropriate action on the amendment filed June 20, 2005, including consideration by the examiner of applicant's entitlement to claim benefit of priority under 35 U.S.C. §120 to the prior-filed non-provisional application.

Frances Hicks

Frances Hicks
Lead Petitions Examiner
Office of Petitions

Enclosure: Corrected Filing Receipt

UNITED STATES PATENT AND TRADEMARK OFFICE

Commissioner for Patents
United States Patent and Trademark Office
P.O. Box 1450
Alexandria, VA 22313-1450
www.uspto.gov

MAILED
FROM DIRECTOR'S OFFICE
OCT 2 4 2006
TECHNOLOGY CENTER 3600

OLIFF & BERRIDGE, PLC
P.O. BOX 19928
ALEXANDRIA, VA 22320

In re application of Geoff A. Baldwin Application No. 10/974,781 Filed: October 28, 2004 For: METHOD AND APPARATUS FOR MONITORING A LOAD CONDITION OF A DRAGLINE	: : : : :	**DECISION ON PETITION TO MAKE SPECIAL (ACCELERATED EXAMINATION)**

This is in response to the petition filed on June 01, 2006 to make the above-identified application special on the basis of special examining procedure for certain new applications - accelerated examination as set forth in MPEP § 708.02 VIII.

The requirements for granting special status under this section are: (A) a petition to make special accompanied by the fee set forth in 37 CFR 1.17(h); (B) all claims being directed to a single invention, or an election without traverse if the Office determines that all the claims are not directed to a single invention; (C) a statement that a pre-examination search was made listing the field of search; (D) one copy of each of the references deemed most closely related to the subject matter encompassed by the claims if said references are not already of record; and (E) a detailed discussion of how the claimed subject matter is patentable over the references in accordance with 37 CFR 1.111 (b) and (c).

The petition fails to adequately meet requirements (B) and (E) above. In this regard, item (B) is not met because the petition fails to include an election without traverse, or a statement that applicants are willing to elect without traverse should a restriction or election be required. As to requirement (E), a detailed discussion of all the references cited in the petition is required.

For the above stated reasons, the petition is **DISMISSED**.

Petitioner is given one more opportunity to perfect the petition. Any request for reconsideration must be filed within TWO MONTHS of the date of this decision. Extensions of time under 37 CFR 1.136(a) are permitted.

Applicant should promptly submit a renewed petition to the Commissioner for Patents, P.O. Box 1450, Alexandria, VA 22313-1450. The envelope should indicate that the correspondence be brought to the attention of Technology Center 3600.

Applicant should promptly submit a renewed petition to the Commissioner for Patents, P.O. Box 1450, Alexandria, VA 22313-1450. The envelope should indicate that the correspondence be brought to the attention of Technology Center 3600.

Until the renewed petition is submitted, the application will be returned to the examiner's docket to await treatment on the merits in the normal order of examination.

Kenneth Dorner
Special Programs Examiner
Technology Center 3600
(571) 272-6587

KJD/slb: 10/12/06

SPE RESPONSE FOR CERTIFICATE OF CORRECTION

Paper No.:20090220

DATE : August 13, 2009

TO SPE OF : ART UNIT 2852

SUBJECT : Request for Certificate of Correction on Patent No.: 7,356,285

A response is requested with respect to the accompanying request for a certificate of correction.

Please complete this form and return with file, within **7** days to:
Certificates of Correction Branch - PK 3-910
Palm location **7590** - Tel. No. 305-8201

With respect to the change(s) requested, correcting Office and/or Applicant's errors, should the patent read as shown in the certificate of correction? No new matter should be introduced, nor should the scope or meaning of the claims be changed.

Thank You For Your Assistance **Certificates of Correction Branch**

The request for issuing the above-identified correction(s) is hereby:
Note your decision on the appropriate box.

☒ **Approved** **All** changes apply.

☐ **Approved in Part** Specify below which changes **do not** apply.

☐ **Denied** State the reasons for denial below.

Comments:

SPE: David Gray **Art Unit** 2852

UNITED STATES PATENT AND TRADEMARK OFFICE

Commissioner for Patents
United States Patent and Trademark Office
P.O. Box 1450
Alexandria, VA 22313-1450
www.uspto.gov

COPY MAILED

NOV 0 5 2008

OFFICE OF PETITIONS

BIRCH STEWART KOLASCH & BIRCH
P.O. BOX 747
FALLS CHURCH VA 22040-0747

In re Application of	:	
Kyung Chan Park et al	:	
Application No. 10/974,790	:	DECISION GRANTING PETITION
Filed: October 28, 2004	:	UNDER 37 CFR 1.313(c)(2)
Attorney Docket No. 0465-1235PUS1	:	

This is a decision on the petition filed November 3, 2008, which is being treated under 37 CFR 1.313(c)(2), to withdraw the above-identified application from issue after payment of the issue fee.

The petition is **GRANTED**.

The above-identified application is withdrawn from issue for consideration of a submission under 37 CFR 1.114 (request for continued examination). *See* 37 CFR 1.313(c)(2).

Petitioner is advised that the issue fee paid on October 14, 2008, cannot be refunded. If, however, this application is again allowed, petitioner may request that it be applied towards the issue fee required by the new Notice of Allowance.[1]

Telephone inquiries should be directed to the undersigned at (571) 272-3208.

This application is being referred to Technology Center AU 2627 for processing of the request for continued examination under 37 CFR 1.114 and for consideration of the concurrently filed IDS.

/Karen Creasy/
Karen Creasy
Petitions Examiner
Office of Petitions

---

[1] *The request to apply the issue fee to the new Notice may be satisfied by completing and returning the new Part B – Fee(s) Transmittal Form (along with any balance due at the time of submission). Petitioner is advised that the Issue Fee Transmittal Form* ***must*** *be completed and timely submitted to avoid abandonment of the application.*

SPE RESPONSE FOR CERTIFICATE OF CORRECTION

Paper No.:20091015

DATE : October 16, 2009

TO SPE OF : ART UNIT 2627

SUBJECT : Request for Certificate of Correction on Patent No.: 7,536,703

A response is requested with respect to the accompanying request for a certificate of correction.

Please complete this form and return with file, within **7** days to:
Certificates of Correction Branch - PK 3-910
Palm location **7590** - Tel. No. 305-8201

With respect to the change(s) requested, correcting Office and/or Applicant's errors, should the patent read as shown in the certificate of correction? No new matter should be introduced, nor should the scope or meaning of the claims be changed.

Thank You For Your Assistance **Certificates of Correction Branch**

The request for issuing the above-identified correction(s) is hereby:
Note your decision on the appropriate box.

☒ **Approved** **All** changes apply.

☐ **Approved in Part** Specify below which changes **do not** apply.

☐ **Denied** State the reasons for denial below.

Comments:

SPE: /Andrea L. Wellington/ **Art Unit** 2627

UNITED STATES PATENT AND TRADEMARK OFFICE

Commissioner for Patents
United States Patent and Trademark Office
P.O. Box 1450
Alexandria, VA 22313-1450
www.uspto.gov

RADER FISHMAN & GRAUER PLLC
LION BUILDING
1233 20TH STREET N.W., SUITE 501
WASHINGTON DC 20036

COPY MAILED
APR 0 4 2007
OFFICE OF PETITIONS

In re Application of	:	
Kuzukawa, Mitsuo	:	
Application No. 10/974,835	:	ON PETITION
Filed: October 28, 2004	:	
Attorney Docket No. OMY-0039	:	

This is a decision on the petition under 37 C.F.R. § 1.137(b), filed January 31, 2007, to revive the above-identified application.

The petition is **GRANTED.**

The petition satisfies the conditions for revival pursuant to the provisions of 37 CFR 1.137(b) in that (1) the reply in the form of a Request for Continued Examination (RCE); (2) the petition fee; and (3) the required statement of unintentional delay have been received. Accordingly, the response has been accepted as having been unintentionally delayed.

This matter is being referred to Technology Center 3600 for processing of the Request for Continued Examination under 37 CFR 1.114 filed with the instant petition.

Telephone inquiries regarding this decision should be directed to the undersigned at (571) 272-3206.

Liana Walsh
Petitions Examiner
Office of Petitions

UNITED STATES PATENT AND TRADEMARK OFFICE

Commissioner for Patents
United States Patent and Trademark Of

BIRCH STEWART KOLASCH & BIRCH
PO BOX 747
FALLS CHURCH VA 22040-0747

COPY MAILED

OCT 1 7 2008

OFFICE OF PETITIONS

In re Application of	:	
Anne Yusof et al	:	
Application No. 10/974,842	:	DECISION ON PETITION
Filed: October 28, 2004	:	
Attorney Docket No. 0825-0169PUS2	:	

This is a decision on the petition under 37 CFR 1.182, filed, July 10, 2008, to change the name of inventor "**Anne Bolmstrom**" to – **Anne Yusof** --.

The petition is **GRANTED**.

Office records have been updated to reflect the inventor's change of name. A corrected Filing Receipt, which reflects the inventor's change of name, accompanies this decision on petition.

Any questions concerning this matter may be directed to the undersigned at (571) 272-3208. Any questions concerning the examination procedures or status of the application should be directed to the Technology Center.

This application is being referred to Technology Center AU 3653.

Karen Creasy
Petitions Examiner
Office of Petitions

ATTACHMENT: Corrected Filing Receipt

UNITED STATES PATENT AND TRADEMARK OFFICE

UNITED STATES DEPARTMENT OF COMMERCE
United States Patent and Trademark Office
Address: COMMISSIONER FOR PATENTS
P.O. Box 1450
Alexandria, Virginia 22313-1450
www.uspto.gov

APPLICATION NUMBER	FILING or 371(c) DATE	GRP ART UNIT	FIL FEE REC'D	ATTY.DOCKET.NO	TOT CLAIMS	IND CLAIMS
10/974,842	10/28/2004	3653	790	0825-0169PUS2	6	1

CONFIRMATION NO. 6254

CORRECTED FILING RECEIPT

2292
BIRCH STEWART KOLASCH & BIRCH
PO BOX 747
FALLS CHURCH, VA 22040-0747

OC000000032589948

Date Mailed: 10/15/2008

Receipt is acknowledged of this non-provisional patent application. The application will be taken up for examination in due course. Applicant will be notified as to the results of the examination. Any correspondence concerning the application must include the following identification information: the U.S. APPLICATION NUMBER, FILING DATE, NAME OF APPLICANT, and TITLE OF INVENTION. Fees transmitted by check or draft are subject to collection. Please verify the accuracy of the data presented on this receipt. **If an error is noted on this Filing Receipt, please submit a written request for a Filing Receipt Correction. Please provide a copy of this Filing Receipt with the changes noted thereon. If you received a "Notice to File Missing Parts" for this application, please submit any corrections to this Filing Receipt with your reply to the Notice. When the USPTO processes the reply to the Notice, the USPTO will generate another Filing Receipt incorporating the requested corrections**

Applicant(s)

Anne Yusof, Akerberga, SWEDEN;
Dusan Kolar, Knivsta, SWEDEN;

Assignment For Published Patent Application

AB BIODISK

Power of Attorney: The patent practitioners associated with Customer Number 2292

Domestic Priority data as claimed by applicant

This application is a DIV of 10/146,950 05/17/2002 PAT 6,843,474

Foreign Applications

SWEDEN 0101740-9 05/17/2001

If Required, Foreign Filing License Granted: 12/17/2004

The country code and number of your priority application, to be used for filing abroad under the Paris Convention, is **US 10/974,842**

Projected Publication Date: Not Applicable

Non-Publication Request: No

Early Publication Request: No

Title

Method and device for application of thin objects

Preliminary Class

271

PROTECTING YOUR INVENTION OUTSIDE THE UNITED STATES

Since the rights granted by a U.S. patent extend only throughout the territory of the United States and have no effect in a foreign country, an inventor who wishes patent protection in another country must apply for a patent in a specific country or in regional patent offices. Applicants may wish to consider the filing of an international application under the Patent Cooperation Treaty (PCT). An international (PCT) application generally has the same effect as a regular national patent application in each PCT-member country. The PCT process **simplifies** the filing of patent applications on the same invention in member countries, but **does not result** in a grant of "an international patent" and does not eliminate the need of applicants to file additional documents and fees in countries where patent protection is desired.

Almost every country has its own patent law, and a person desiring a patent in a particular country must make an application for patent in that country in accordance with its particular laws. Since the laws of many countries differ in various respects from the patent law of the United States, applicants are advised to seek guidance from specific foreign countries to ensure that patent rights are not lost prematurely.

Applicants also are advised that in the case of inventions made in the United States, the Director of the USPTO must issue a license before applicants can apply for a patent in a foreign country. The filing of a U.S. patent application serves as a request for a foreign filing license. The application's filing receipt contains further information and guidance as to the status of applicant's license for foreign filing.

Applicants may wish to consult the USPTO booklet, "General Information Concerning Patents" (specifically, the section entitled "Treaties and Foreign Patents") for more information on timeframes and deadlines for filing foreign patent applications. The guide is available either by contacting the USPTO Contact Center at 800-786-9199, or it can be viewed on the USPTO website at http://www.uspto.gov/web/offices/pac/doc/general/index.html.

For information on preventing theft of your intellectual property (patents, trademarks and copyrights), you may wish to consult the U.S. Government website, http://www.stopfakes.gov. Part of a Department of Commerce initiative, this website includes self-help "toolkits" giving innovators guidance on how to protect intellectual property in specific countries such as China, Korea and Mexico. For questions regarding patent enforcement issues, applicants may call the U.S. Government hotline at 1-866-999-HALT (1-866-999-4158).

LICENSE FOR FOREIGN FILING UNDER

Title 35, United States Code, Section 184

Title 37, Code of Federal Regulations, 5.11 & 5.15

GRANTED

The applicant has been granted a license under 35 U.S.C. 184, if the phrase "IF REQUIRED, FOREIGN FILING LICENSE GRANTED" followed by a date appears on this form. Such licenses are issued in all applications where the conditions for issuance of a license have been met, regardless of whether or not a license may be required as

set forth in 37 CFR 5.15. The scope and limitations of this license are set forth in 37 CFR 5.15(a) unless an earlier license has been issued under 37 CFR 5.15(b). The license is subject to revocation upon written notification. The date indicated is the effective date of the license, unless an earlier license of similar scope has been granted under 37 CFR 5.13 or 5.14.

This license is to be retained by the licensee and may be used at any time on or after the effective date thereof unless it is revoked. This license is automatically transferred to any related applications(s) filed under 37 CFR 1.53(d). This license is not retroactive.

The grant of a license does not in any way lessen the responsibility of a licensee for the security of the subject matter as imposed by any Government contract or the provisions of existing laws relating to espionage and the national security or the export of technical data. Licensees should apprise themselves of current regulations especially with respect to certain countries, of other agencies, particularly the Office of Defense Trade Controls, Department of State (with respect to Arms, Munitions and Implements of War (22 CFR 121-128)); the Bureau of Industry and Security, Department of Commerce (15 CFR parts 730-774); the Office of Foreign AssetsControl, Department of Treasury (31 CFR Parts 500+) and the Department of Energy.

NOT GRANTED

No license under 35 U.S.C. 184 has been granted at this time, if the phrase "IF REQUIRED, FOREIGN FILING LICENSE GRANTED" DOES NOT appear on this form. Applicant may still petition for a license under 37 CFR 5.12, if a license is desired before the expiration of 6 months from the filing date of the application. If 6 months has lapsed from the filing date of this application and the licensee has not received any indication of a secrecy order under 35 U.S.C. 181, the licensee may foreign file the application pursuant to 37 CFR 5.15(b).

UNITED STATES PATENT AND TRADEMARK OFFICE

Commissioner for Patents
United States Patent and Trademark Office
P.O. Box 1450
Alexandria, VA 22313-1450
www.uspto.gov

MOTOROLA INC
600 NORTH US HIGHWAY 45
W4 - 39Q
LIBERTYVILLE IL 60048-5343

COPY MAILED

NOV 21 2007

OFFICE OF PETITIONS

In re Application of :
Richard Ng et al :
Application No. 10/974,864 : DECISION ON PETITION
Filed: October 27, 2004 :
Attorney Docket No. CS22305RL :

This is a decision on the petition under 37 CFR 1.137(b), filed April 27, 2007, which, for the reasons stated below, is being treated as a petition under 37 CFR 1.181(a) to withdraw the holding of abandonment in this application.

The petition treated under 37 CFR 1.181(a) is **GRANTED**.

The record shows that a non-final Office action was mailed on August 15, 2006, which set a three month shortened statutory period for reply. On November 13, 2006, petitioner timely filed an amendment. However, the amendment to the claims was found to be non-compliant as noted in the Notice of Non-Compliant Amendment (hereafter Notice), mailed November 27, 2006. The Notice set an extendable one (1) month period within which to correct the amendment to the claims. Accordingly, a reply was due on or before December 27, 2006 or up to and including May 29, 2007 (May 27, 2007, is a Sunday, and May 28, 2007, is a holiday), with the appropriate extension of time fees.

A Notice of Abandonment was mailed on July 12, 2007, stating that the reply received on April 27, 2007 was received after the expiration of the period for reply to the November 27, 2006 Office action, which period expired on December 27, 2006. However, this application was improperly held abandoned since, as noted above, extensions of time were available to reply to the November 27, 2006 Office action up to and including May 29, 2007. Therefore, at the time of the April 27, 2007 reply, a four month extension of time was due. Accordingly, a fee of $1,640 for the four (4) month extension of time will be charged to petitioner's deposit account. An authorization to charge any

additional fees during the pendency of this application was received in the transmittal letter submitted with the application.

In view of the above, this application is not in fact abandoned. Accordingly, the Notice of Abandonment mailed July 12, 2007 is **vacated** and the holding of abandonment **withdrawn**.

In view of the above, the $1,500 petition fee is unnecessary and will be refunded to petitioner's deposit account in due course.

Inquiries concerning this decision may be directed to the undersigned at (571) 272-3218.

This application is being referred to Technology Center AU 2821 for further action on the reply received April 27, 2007.

Frances Hicks

Frances Hicks
Petitions Examiner
Office of Petitions

UNITED STATES PATENT AND TRADEMARK OFFICE

Commissioner for Patents
United States Patent and Trademark Office
P.O. Box 1450
Alexandria, VA 22313-1450
www.uspto.gov

HARRINGTON & SMITH, PC
4 RESEARCH DRIVE
SHELTON CT 06484-6212

COPY MAILED
SEP 02 2008

In re Application of	:	
Antti VALJAKKA et al.	:	
Application No. 10/974,865	:	DECISION ON PETITION
Filed: October 26, 2004	:	
Attorney Docket No. **881B.0012.U1 (US)**	:	

This is a decision on the petition under the unintentional provisions of 37 CFR 1.137(b), filed July 09, 2008, to revive the above-identified application.

The petition is **GRANTED**.

The application became abandoned for failure to timely file a reply within the meaning of 37 CFR 1.113 to the final Office action of November 02, 2007. The proposed reply required for consideration of a petition to revive must be a Notice of Appeal (and appeal fee required by 37 CFR 41.20(b)(2), an amendment that *prima facie* places the application in condition for allowance, a Request for Continued Examination and submission (37 CFR 1.114), or the filing of a continuing application under 37 CFR 1.53(b). See MPEP 711.03(c)(III)(A)(2). A three (3) months extension of time pursuant to the provisions of 37 CFR 1.136(a) were obtained. Accordingly, the date of abandonment of this application is May 03, 2008.

The petition satisfies the requirements of 37 CFR 1.137(b) in that petitioner has supplied (1) the reply in the form of a Request for Continued Examination (RCE) and fee of $405, and the submission required by 37 CFR 1.114; (2) the petition fee of $770; and (3) a proper statement of unintentional delay. Accordingly, the reply to the final Office Action of November 02, 2007 is accepted as having been unintentionally delayed.

Telephone inquiries concerning this decision should be directed to the undersigned at (571) 272-2783.

This application is being referred to Technology Center AU 3739 for processing of the RCE and for appropriate action by the Examiner in the normal course of business on the amendment submitted in accordance with 37 CFR 1.114.

Ramesh Krishnamurthy

Ramesh Krishnamurthy
Petitions Examiner
Office of Petitions

OIPE IAP79
JUL 0 9 2008
PATENT & TRADEMARK OFFICE

PTO/SB/30 (01-08)
Approved for use through 03/31/2008. OMB 0651-0031
U.S. Patent and Trademark Office: U.S. DEPARTMENT OF COMMERCE
Under the Paperwork Reduction Act of 1995, no persons are required to respond to a collection of information unless it displays a valid OMB control number.

Request For Continued Examination (RCE) Transmittal

Address to:
Mail Stop RCE
Commissioner for Patents
P.O. Box 1450
Alexandria, VA 22313-1450

Application Number	10/974,865
Filing Date	10/26/2004
First Named Inventor	Antti Valjakka
Art Unit	3739
Examiner Name	Cohen, Lee S.
Attorney Docket Number	881B.0012.U1(US)

This is a Request for Continued Examination (RCE) under 37 CFR 1.114 of the above-identified application.
Request for Continued Examination (RCE) practice under 37 CFR 1.114 does not apply to any utility or plant application filed prior to June 8, 1995, or to any design application. See Instruction Sheet for RCEs (not to be submitted to the USPTO) on page 2.

1. Submission required under 37 CFR 1.114 — Note: If the RCE is proper, any previously filed unentered amendments and amendments enclosed with the RCE will be entered in the order in which they were filed unless applicant instructs otherwise. If applicant does not wish to have any previously filed unentered amendment(s) entered, applicant must request non-entry of such amendment(s).
   a. ☒ Previously submitted. If a final Office action is outstanding, any amendments filed after the final Office action may be considered as a submission even if this box is not checked.
      i. ☐ Consider the arguments in the Appeal Brief or Reply Brief previously filed on _____
      ii. ☐ Other _____
   b. ☐ Enclosed
      i. ☐ Amendment/Reply
      ii. ☐ Affidavit(s)/Declaration(s)
      iii. ☐ Information Disclosure Statement (IDS)
      iv. ☐ Other _____
2. Miscellaneous
   a. ☐ Suspension of action on the above-identified application is requested under 37 CFR 1.103(c) for a period of _____ months. (Period of suspension shall not exceed 3 months; Fee under 37 CFR 1.17(i) required)
   b. ☐ Other _____
3. Fees — The RCE fee under 37 CFR 1.17(e) is required by 37 CFR 1.114 when the RCE is filed.
   a. ☒ The Director is hereby authorized to charge the following fees, any underpayment of fees, or credit any overpayments to Deposit Account No. 50-1924. I have enclosed a duplicate copy of this sheet.
      i. ☒ RCE fee required under 37 CFR 1.17(e)
      ii. ☐ Extension of time fee (37 CFR 1.136 and 1.17)
      iii. ☐ Other _____
   b. ☒ Check in the amount of $ 405.00 enclosed
   c. ☐ Payment by credit card (Form PTO-2038 enclosed)

WARNING: Information on this form may become public. Credit card information should not be included on this form. Provide credit card information and authorization on PTO-2038.

SIGNATURE OF APPLICANT, ATTORNEY, OR AGENT REQUIRED

Signature	Mark F. Harrington	Date	July 7, 2008
Name (Print / Type)	Mark F. Harrington	Registration No.	31,686

CERTIFICATE OF MAILING OR TRANSMISSION

I hereby certify that this correspondence is being deposited with the United States Postal Service with sufficient postage as first class mail in an envelope addressed to: Mail Stop RCE, Commissioner For Patents, P.O. Box 1450, Alexandria, VA 22313-1450 or facsimile transmitted to the U.S. Patent and Trademark Office on the date shown below.

Signature	Elaine F. Mian		
Name (Print / Type)	Elaine F. Mian	Date	July 7, 2008

07/09/2008 HABDELR1 00000060 10974865
01 FC:2801 405.00 OP

This collection of information is required by 37 CFR 1.114. The information is required to obtain or retain a benefit by the public which is to file (and by the USPTO to process) an application. Confidentiality is governed by 35 U.S.C. 122 and 37 CFR 1.11 and 1.14. This collection is estimated to take 12 minutes to complete, including gathering, preparing, and submitting the completed application form to the USPTO. Time will vary depending upon the individual case. Any comments on the amount of time you require to complete this form and/or suggestions for reducing the burden, should be sent to the Chief Information Officer, U.S. Patent and Trademark Office, U.S. Department of Commerce, P.O. Box 1450, Alexandria, VA 22313-1450. DO NOT SEND FEES OR COMPLETED FORMS TO THIS ADDRESS. SEND TO: Mail Stop RCE, Commissioner for Patents, P.O. Box 1450, Alexandria, VA 22313-1450.

If you need assistance in completing the form, call 1-800-PTO-9199 and select option 2.

OIPE IAP79
JUL 0 9 2008
PATENT & TRADEMARK OFFICE

1 Fm - DAC
PTO

PTO/SB/64 (01-08)
Approved for use through 03/31/2008. OMB 0651-0031
U.S. Patent and Trademark Office; U.S. DEPARTMENT OF COMMERCE
Under the Paperwork Reduction Act of 1995, no persons are required to respond to a collection of information unless it displays a valid OMB control number.

PETITION FOR REVIVAL OF AN APPLICATION FOR PATENT ABANDONED UNINTENTIONALLY UNDER 37 CFR 1.137(b)	Docket Number (Optional) 881B.0012.U1(US)

First named inventor: Antti Valjakka

Application No.: 10/974,865 Art Unit: 3739

Filed: October 26, 2004 Examiner: Cohen, Lee S.

Title: Electrode Detector for Monitoring Biopotential on Tissue

Attention: Office of Petitions
Mail Stop Petition
Commissioner for Patents
P.O. Box 1450
Alexandria, VA 22313-1450
FAX: (571) 273-8300

NOTE: If information or assistance is needed in completing this form, please contact Petitions Information at (571) 272-3282.

The above-identified application became abandoned for failure to file a timely and proper reply to a notice or action by the United States Patent and Trademark Office. The date of abandonment is the day after the expiration date of the period set for reply in the office notice or action plus any extensions of time actually obtained.

APPLICANT HEREBY PETITIONS FOR REVIVAL OF THIS APPLICATION

NOTE: A grantable petition requires the following items:
(1) Petition fee;
(2) Reply and/or issue fee;
(3) Terminal disclaimer with disclaimer fee - required for all utility and plant applications filed before June 8, 1995; and for all design applications; and
(4) Statement that the entire delay was unintentional.

1. Petition fee

☒ Small entity-fee $ 770 (37 CFR 1.17(m)). Applicant claims small entity status. See 37 CFR 1.27.

☐ Other than small entity - fee $ _____ (37 CFR 1.17(m))

2. Reply and/or fee

A. The reply and/or fee to the above-noted Office action in the form of Request for Continued Examination (RCE) (identify type of reply):

☐ has been filed previously on _____.

☒ is enclosed herewith.

B. The issue fee and publication fee (if applicable) of $ _____.

☐ has been paid previously on _____.

☐ is enclosed herewith.

07/09/2008 WABDELR1 00000060 10974865 770.00 OP
02 FC:2453

This collection of information is required by 37 CFR 1.137(b). The information is required to obtain or retain a benefit by the public which is to file (and by the USPTO to process) an application. Confidentiality is governed by 35 U.S.C. 122 and 37 CFR 1.11 and 1.14. This collection is estimated to take 1.0 hour to complete, including gathering, preparing, and submitting the completed application form to the USPTO. Time will vary depending on the individual case. Any comments on the amount of time you require to complete this form and/or suggestions for reducing this burden, should be sent to the Chief Information Officer, U.S. Patent and Trademark Office, U.S. Department of Commerce, P.O. Box 1450, Alexandria, VA 22313-1450. DO NOT SEND FEES OR COMPLETED FORMS TO THIS ADDRESS. SEND TO: Mail Stop Petition, Commissioner for Patents, P.O. Box 1450, Alexandria, VA 22313-1450.

If you need assistance in completing the form, call 1-800-PTO-9199 and select option 2.

Under the Paperwork Reduction Act of 1995, no persons are required to respond to a collection of information unless it displays a valid OMB control number.

3. Terminal disclaimer with disclaimer fee

☒ Since this utility/plant application was filed on or after June 8, 1995, no terminal disclaimer is required.

☐ A terminal disclaimer (and disclaimer fee (37 CFR 1.20(d)) of $ _____ for a small entity or $ _____ for other than a small entity) disclaiming the required period of time is enclosed herewith (see PTO/SB/63).

4. STATEMENT: The entire delay in filing the required reply from the due date for the required reply until the filing of a grantable petition under 37 CFR 1.137(b) was unintentional. [NOTE. The United States Patent and Trademark Office may require additional information if there is a question as to whether either the abandonment or the delay in filing a petition under 37 CFR 1.137(b) was unintentional (MPEP 711.03(c), subsections (III)(C) and (D)).]

WARNING:

Petitioner/applicant is cautioned to avoid submitting personal information in documents filed in a patent application that may contribute to identity theft. Personal information such as social security numbers, bank account numbers, or credit card numbers (other than a check or credit card authorization form PTO-2038 submitted for payment purposes) is never required by the USPTO to support a petition or an application. If this type of personal information is included in documents submitted to the USPTO, petitioners/applicants should consider redacting such personal information from the documents before submitting them to the USPTO. Petitioner/applicant is advised that the record of a patent application is available to the public after publication of the application (unless a non-publication request in compliance with 37 CFR 1.213(a) is made in the application) or issuance of a patent. Furthermore, the record from an abandoned application may also be available to the public if the application is referenced in a published application or an issued patent (see 37 CFR 1.14). Checks and credit card authorization forms PTO-2038 submitted for payment purposes are not retained in the application file and therefore are not publicly available.

Mark F. Harrington	July 7, 2008
Signature	Date
Mark F. Harrington	31,686
Typed or printed name	Registration Number, if applicable
Harrington & Smith, PC	(203) 925-9400
Address	Telephone Number
4 Research Drive, Shelton, CT 06484-6212	
Address	

Enclosures: ☒ Fee Payment

☐ Reply

☐ Terminal Disclaimer Form

☐ Additional sheets containing statements establishing unintentional delay

☒ Other: RCE

CERTIFICATE OF MAILING OR TRANSMISSION [37 CFR 1.8(a)]

I hereby certify that this correspondence is being:

☒ Deposited with the United States Postal Service on the date shown below with sufficient postage as first class mail in an envelope addressed to: Mail Stop Petition, Commissioner for Patents, P.O. Box 1450, Alexandria, VA 22313-1450.

☐ Transmitted by facsimile on the date shown below to the United States Patent and Trademark Office at (571) 273-8300.

7/7/2008	Elaine F. Mian
Date	Signature
	Elaine F. Mian
	Type or printed name of person signing certificate

RAM Fee History Query

Revenue Accounting and Management

Name/Number: 10974865 Total Records Found: 7

Start Date: Any Date End Date: Any Date

Accounting Date	Sequence Num.	Fee Type	Fee Code	Fee Amount	Mailroom Date	Payment Method
07/09/2008	00000208	1	2801	$405.00	07/09/2008	CK
07/09/2008	00000209	1	2453	$770.00	07/09/2008	CK
05/05/2008	00000074	1	2253	$525.00	05/05/2008	CK 3 months
10/05/2007	00000104	1	2253	$525.00	10/05/2007	CK
02/07/2005	00000014	1	8021	$40.00	02/03/2005	CK
02/07/2005	00000016	1	2051	$65.00	02/03/2005	CK
10/29/2004	00000132	1	2001	$395.00	10/26/2004	CK

OIPE IAP79
JUL 0 9 2008
PATENT & TRADEMARK OFFICE

IFW - DAC
RCE

PTO/SB/64 (01-08)
Approved for use through 03/31/2008. OMB 0651-0031
U.S. Patent and Trademark Office; U.S. DEPARTMENT OF COMMERCE
Under the Paperwork Reduction Act of 1995, no persons are required to respond to a collection of information unless it displays a valid OMB control number.

PETITION FOR REVIVAL OF AN APPLICATION FOR PATENT ABANDONED UNINTENTIONALLY UNDER 37 CFR 1.137(b)

Docket Number (Optional)
881B.0012.U1(US)

First named inventor: Antti Valjakka

Application No.: 10/974,865 Art Unit: 3739

Filed: October 26, 2004 Examiner: Cohen, Lee S.

Title: Electrode Detector for Monitoring Biopotential on Tissue

Attention: Office of Petitions
Mail Stop Petition
Commissioner for Patents
P.O. Box 1450
Alexandria, VA 22313-1450
FAX: (571) 273-8300

NOTE: If information or assistance is needed in completing this form, please contact Petitions Information at (571) 272-3282.

The above-identified application became abandoned for failure to file a timely and proper reply to a notice or action by the United States Patent and Trademark Office. The date of abandonment is the day after the expiration date of the period set for reply in the office notice or action plus any extensions of time actually obtained.

APPLICANT HEREBY PETITIONS FOR REVIVAL OF THIS APPLICATION

NOTE: A grantable petition requires the following items:
(1) Petition fee;
(2) Reply and/or issue fee;
(3) Terminal disclaimer with disclaimer fee - required for all utility and plant applications filed before June 8, 1995; and for all design applications; and
(4) Statement that the entire delay was unintentional.

1. Petition fee

☒ Small entity-fee $ 770 (37 CFR 1.17(m)). Applicant claims small entity status. See 37 CFR 1.27.

☐ Other than small entity - fee $ _____ (37 CFR 1.17(m))

2. Reply and/or fee

A. The reply and/or fee to the above-noted Office action in the form of Request for Continued Examination (RCE) (identify type of reply):

☐ has been filed previously on _____.

☒ is enclosed herewith.

B. The issue fee and publication fee (if applicable) of $ _____.

☐ has been paid previously on _____.

☐ is enclosed herewith.

This collection of information is required by 37 CFR 1.137(b). The information is required to obtain or retain a benefit by the public which is to file (and by the USPTO to process) an application. Confidentiality is governed by 35 U.S.C. 122 and 37 CFR 1.11 and 1.14. This collection is estimated to take 1.0 hour to complete, including gathering, preparing, and submitting the completed application form to the USPTO. Time will vary depending on the individual case. Any comments on the amount of time you require to complete this form and/or suggestions for reducing this burden, should be sent to the Chief Information Officer, U.S. Patent and Trademark Office, U.S. Department of Commerce, P.O. Box 1450, Alexandria, VA 22313-1450. DO NOT SEND FEES OR COMPLETED FORMS TO THIS ADDRESS. SEND TO: Mail Stop Petition, Commissioner for Patents, P.O. Box 1450, Alexandria, VA 22313-1450.

If you need assistance in completing the form, call 1-800-PTO-9199 and select option 2.

07/09/2008 WABDELR1 00000060 10974865
02 FC:2453 770.00 OP

Under the Paperwork Reduction Act of 1995, no persons are required to respond to a collection of information unless it displays a valid OMB control number.

3. Terminal disclaimer with disclaimer fee

☒ Since this utility/plant application was filed on or after June 8, 1995, no terminal disclaimer is required.

☐ A terminal disclaimer (and disclaimer fee (37 CFR 1.20(d)) of $ _____ for a small entity or $ _____ for other than a small entity) disclaiming the required period of time is enclosed herewith (see PTO/SB/63).

4. STATEMENT: The entire delay in filing the required reply from the due date for the required reply until the filing of a grantable petition under 37 CFR 1.137(b) was unintentional. [NOTE. The United States Patent and Trademark Office may require additional information if there is a question as to whether either the abandonment or the delay in filing a petition under 37 CFR 1.137(b) was unintentional (MPEP 711.03(c), subsections (III)(C) and (D)).]

WARNING:

Petitioner/applicant is cautioned to avoid submitting personal information in documents filed in a patent application that may contribute to identity theft. Personal information such as social security numbers, bank account numbers, or credit card numbers (other than a check or credit card authorization form PTO-2038 submitted for payment purposes) is never required by the USPTO to support a petition or an application. If this type of personal information is included in documents submitted to the USPTO, petitioners/applicants should consider redacting such personal information from the documents before submitting them to the USPTO. Petitioner/applicant is advised that the record of a patent application is available to the public after publication of the application (unless a non-publication request in compliance with 37 CFR 1.213(a) is made in the application) or issuance of a patent. Furthermore, the record from an abandoned application may also be available to the public if the application is referenced in a published application or an issued patent (see 37 CFR 1.14). Checks and credit card authorization forms PTO-2038 submitted for payment purposes are not retained in the application file and therefore are not publicly available.

Mark F. Harrington	July 7, 2008
Signature	Date
Mark F. Harrington	31,686
Typed or printed name	Registration Number, if applicable
Harrington & Smith, PC	(203) 925-9400
Address	Telephone Number
4 Research Drive, Shelton, CT 06484-6212	
Address	

Enclosures: ☒ Fee Payment

☐ Reply

☐ Terminal Disclaimer Form

☐ Additional sheets containing statements establishing unintentional delay

☒ Other: RCE

CERTIFICATE OF MAILING OR TRANSMISSION [37 CFR 1.8(a)]

I hereby certify that this correspondence is being:

☒ Deposited with the United States Postal Service on the date shown below with sufficient postage as first class mail in an envelope addressed to: Mail Stop Petition, Commissioner for Patents, P.O. Box 1450, Alexandria, VA 22313-1450.

☐ Transmitted by facsimile on the date shown below to the United States Patent and Trademark Office at (571) 273-8300.

7/7/2008	Elaine F. Mian
Date	Signature
	Elaine F. Mian
	Type or printed name of person signing certificate

UNITED STATES PATENT AND TRADEMARK OFFICE

Commissioner for Patents
United States Patent and Trademark Office
P.O. Box 1450
Alexandria, VA 22313-1450
www.uspto.gov

Clifford W. Vermette
Box 40
Granville Square
200 Granville Street, Suite 230
Vancouver, BC V6C 1S4 CA CANADA

COPY MAILED

APR 06 2005

OFFICE OF PETITIONS

In re Application of	:	
Katz et al.	:	
Application No. 10/974,884	:	DECISION GRANTING
Filed: October 28, 2004	:	STATUS UNDER
FOR: KEYBOARD AND STAND	:	37 CFR 1.47(a)
FOR PORTABLE COMPUTING AND	:	
COMMUNICATION DEVICES	:	

This is in response to a Petition Under 37 CFR 1.47 Regarding Refusal Co-Inventor to Proceed, filed March 4, 2005. The petition is properly treated under 37 CFR 1.47(a), to allow the other inventor(s) to proceed with the application on behalf of himself or herself and the nonsigning inventor.

The petition is **granted**.

The above-identified application and papers have been reviewed and found in compliance with 37 CFR 1.47(a). This application is hereby accorded Rule 1.47(a) status.

Petitioner has shown that the non-signing inventor, Rodger Li, refuses to join in the application.

As provided in Rule 1.47(a), this Office will forward notice of this application's filing to the non-signing inventor at the address given in the Petition. Notice of the filing of this application will also be published in the Official Gazette.

The application file is being returned to the Office of Initial Patent Examination for continued processing.

Telephone inquiries concerning this matter should be directed to Petitions Attorney Derek L. Woods at (571) 272-3232.

Derek L. Woods
Attorney/Advisor
Office of Petitions

UNITED STATES PATENT AND TRADEMARK OFFICE

Commissioner for Patents
United States Patent and Trademark Office
P.O. Box 1450
Alexandria, VA 22313-1450
www.uspto.gov

Roger Li
1459 Anderson Street
VANCOUVER, BRITISH COLUMBIA
V6H 3R5

COPY MAILED

APR 06 2005

OFFICE OF PETITIONS

In re Application of	:	
Katz et al.	:	
Application No. 10/974,884	:	LETTER
Filed: October 28, 2004	:	
FOR: KEYBOARD AND STAND	:	
FOR PORTABLE COMPUTING AND	:	
COMMUNICATION DEVICES	:	

Dear Mr. Li:

You are named as a joint inventor in the above-identified United States patent application filed under the provisions of 35 U.S.C. 116 (United States Code) and 37 CFR 1.47(a), Rules of Practice in Patent Cases. Should a patent be granted on the application you will be designated therein as a joint inventor.

As a named inventor you are entitled to inspect any paper in the file wrapper of the application, order copies of all or any part thereof (at a prepaid cost per 37 CFR 1.19) or make your position of record in the application. Alternatively, you may arrange to do any of the preceding through a registered patent attorney or agent presenting written authorization from you. If you care to join the application, counsel of record (see below) would presumably assist you. Joining in the application would entail the filing of an appropriate oath or declaration by you pursuant to 37 CFR 1.63.

Telephone inquiries regarding this communication should be directed to the undersigned at (571) 272-3232. Requests for information regarding your application should be directed to the File Information Unit at (703) 308-2733. Information regarding how to pay for and order a copy of the application, or a specific paper in the application, should be directed to Certification Division at (703) 308-9726 or 1-800-972-6382 (outside the Washington D.C. area).

Derek L. Woods
Attorney Advisor
Office of Petitions

cc: Clifford W. Vermette
Box 40
Granville Square
200 Granville Street, Suite 230
Vancouver, BC V6C 1S4 CA CANADA

UNITED STATES PATENT AND TRADEMARK OFFICE

Commissioner for Patents
United States Patent and Trademark Office
P.O. Box 1450
Alexandria, VA 22313-1450
www.uspto.gov

Clifford W. Vermette
Box 40
Granville Square
200 Granville Street, Suite 230
Vancouver BC V6C 1S4 CA **CANADA**

COPY MAILED

JUL 17 2008

OFFICE OF PETITIONS

In re Application of	:	
Michael Katz, et. al.	:	
Application No. 10/974,884	:	ON PETITION
Filed: October 28, 2004	:	
Attorney Docket No. 2390-102	:	

This is a decision on the petition under 37 CFR 1.137(b), filed on October 26, 2007, to revive the above-identified application.

The petition is **DISMISSED**.

The application became abandoned for failure to reply to the Notice of Allowance and Fee(s) Due mailed June 5, 2007. A Notice of Abandonment was mailed on September 28, 2007.

A grantable petition under 37 CFR 1.137(b) must be accompanied by: (1) the required reply, unless previously filed; (2) the petition fee as set forth in 37 CFR 1.17(m); (3) a statement that the entire delay in filing the required reply from the due date for the reply until the filing of a grantable petition pursuant to 37 CFR 1.137(b) was unintentional; and (4) any terminal disclaimer (and fee as set forth in 37 CFR 1.20(d)) required by 37 CFR 1.137(d). Where there is a question as to whether either the abandonment or the delay in filing a petition under 37 CFR 1.137 was unintentional, the Commissioner may require additional information. See MPEP 711.03(c)(III)(C) and (D). The instant petition lacks item(s) (1).

The Office acknowledges receipt of $770 for treatment of the instant petition, $300 for payment of the publication fee and $700 for payment of the issue fee. However, effective September 30, 2007, the required issue fee was increased to $720. Therefore, petitioner must submit the balance of $20 before revival can occur.

The file does not indicate a change of address has been submitted, although the address given on the petition differs from the address of record. If appropriate, a change of address should be filed

in accordance with MPEP 601.03. A courtesy copy of this decision is being mailed to the address given on the petition; however, the Office will mail all future correspondence solely to the address of record.

Any request for reconsideration of this decision must be submitted within **TWO (2) MONTHS** from the mail date of this decision. Extensions of time under 37 CFR 1.136(a) are permitted. The reconsideration request should include a cover letter entitled "Renewed Petition under 37 CFR 1.137(b)." This is **not** a final agency action within the meaning of 5 U.S.C. § 704.

Further correspondence with respect to this matter should be addressed as follows:

By mail: Mail Stop PETITION
Commissioner for Patents
P. O. Box 1450
Alexandria, VA 22313-1450

By hand: U. S. Patent and Trademark Office
Customer Service Window, Mail Stop Petitions
Randolph Building
401 Dulany Street
Alexandria, VA 22314

The centralized facsimile number is **(571) 273-8300.**

Correspondence regarding this decision may also be filed through the electronic filing system of the USPTO.

To expedite consideration, petitioner may wish to contact the undersigned regarding the filing of the renewed petition under 37 CFR 1.137(b).

Telephone inquiries concerning this decision should be directed to the undersigned at (571) 272-3226.

Andrea Smith
Petitions Examiner
Office of Petitions

cc: Clifford W. Vermette
Suite 320 – 1177 West Hastings Street
Vancouver, B.C. V6E 2K3
CANADA

UNITED STATES PATENT AND TRADEMARK OFFICE

UNITED STATES DEPARTMENT OF COMMERCE
United States Patent and Trademark Office
Address: COMMISSIONER FOR PATENTS
P.O. Box 1450
Alexandria, Virginia 22313-1450
www.uspto.gov

KENYON & KENYON LLP
ONE BROADWAY
NEW YORK, NY 10004

Mail Date: 04/21/2010

Applicant	: Mario Schmidt	: DECISION ON REQUEST FOR
Patent Number	: 7580784	: RECALCULATION of PATENT
Issue Date	: 08/25/2009	: TERM ADJUSTMENT IN VIEW
Appliction No	: 10/974,903	: OF WYETH AND NOTICE OF INTENT TO
Filed	: 10/26/2004	: ISSUE CERTIFICATE OF CORRECTION
		:

The Request for Recalculation is **GRANTED** to the extent indicated.

The patent term adjustment has been determined to be **1164** days. The USPTO will *sua sponte* issue a certificate of correction reflecting the amount of PTA days determined by the recalculation.

Prior to the issuance of the certificate of correction, the USPTO will afford patentee an opportunity to be heard and request reconsideration. Accordingly, patentee has **one month or thirty (30) days**, whichever is longer, to file a request for reconsideration of this patent term adjustment calculation. See 35 U.S.C. 154(b)(3)(B)(ii) and 37 CFR 1.322(a)(4). No extensions of time will be granted under 37 CFR 1.136.

Patentee should use document code PET.OP if electronically filing a request for reconsideration of this patent term adjustment calculation. The patentee must also include the information required by 37 CFR 1.705(b)(2) and the fee required by 37 CFR 1.18(e). If patentee does not file a timely request for reconsideration of this patent term adjustment calculation including the information required by 37 CFR 1.705(b)(2) and the fee required by 37 CFR 1.18(e), the USPTO will issue a certificate of correction reflecting the PTA determination noted above.

Patentee should be aware that in order to preserve the right to review in the United States District Court for the District of Columbia of the USPTO patent term adjustment determination, patentee must ensure that he or she also take the steps required under 35 U.S.C. 154(b)(4)(A) in a timely manner. Nothing in the request for recalculation should be construed as providing an alternative time frame for commencing a civil action under 35 U.S.C. 154(b)(4)(A).

Any questions concerning this decision should be directed to the Office of Patent Legal Administration at 571-272-7702.

UNITED STATES PATENT AND TRADEMARK OFFICE

Commissioner for Patents
United States Patent and Trademark Office
P.O. Box 1450
Alexandria, VA 22313-1450
www.uspto.gov

MAILED
FROM DIRECTORS OFFICE

MAR 16 2005

TECHNOLOGY CENTER 3600

BRIAN ROFFE, ESQ
11 SUNRISE PLAZA, SUITE 303
VALLEY STREAM, NY 11580-6170

In re application of : **DECISION ON PETITION**
David S. Breed : **TO MAKE SPECIAL**
Application No. 10/974,919 : **(APPLICANT'S AGE)**
Filed: October 27, 2004 :
For: STEERING WHEEL ASSEMBLIES FOR VEHICLES

This is a decision on the petition submitted on January 31, 2005 under 37 CFR 1.102 (c) to make the above-identified application special under the accelerated examination procedure set forth in MPEP 708.02, Section IV: Applicant's Age.

The petition is **GRANTED**.

An application may be accorded special status upon the filing of a petition providing evidence showing that the applicant is at least 65 years old. Such a showing may be provided by evidence such as a birth certificate or a statement from the applicant.

The evidence submitted with the petition is a passport indicating Mr. Breed is at least 65 years of age.

The examiner is directed (1) to make an interference search for possible interfering applications, (2) to promptly examine this application out of turn, and (3) if any interfering application is discovered, to examine such application simultaneously and state in the first official letter of such application that it is being taken out of turn because of a possible interference.

Petitioner is advised that this application will continue to be special, throughout its entire prosecution and pendency, including interference or appeal, if any, only if petitioner makes a prompt ***bona fide*** effort, in response to each Office action, to place the application in condition for allowance, even if it is necessary to conduct an interview with the examiner to accomplish this purpose.

SUMMARY: Petition to Make Special **GRANTED**.

Kenneth J. Dorner
Special Programs Examiner
Technology Center 3600
(703) 308-0866

KJD/slb: 02/08/05

SPE RESPONSE FOR CERTIFICATE OF CORRECTION

Paper No.: _____

DATE : August 31, 2009

TO SPE OF : ART UNIT 3726

SUBJECT : Request for certificate of correction for Appln.no. 10/974968

Please respond to this request for a certificate of correction within 7 days.

FOR IFW FILES:

Please review the requested changes/corrections as shown in the **COCIN** document(s) in the IFW application image. No new matter should be introduced, nor should the scope or meaning of the claims be changed.

Please complete the response (see below) and forward the completed response to scanning using document code **COCX**.

FOR PAPER FILES:

Please review the requested changes/corrections as shown in the attached certificate of correction. Please complete this form (see below) and forward it with the file to:

Certificates of Correction Branch (CofC)
South Tower - 9A22
Palm Location 7580

Magdalene Talley
Certificates of Correction Branch
703-308-9390 ext. 120

Thank You For Your Assistance

The request for issuing the above-identified correction(s) is hereby:
Note your decision on the appropriate box.

- ☐ **Approved** — All changes apply.
- ☐ **Approved in Part** — Specify below which changes **do not** apply.
- ☐ **Denied** — State the reasons for denial below.

Comments: _____

/David P. Bryant/
SPE, Art Unit 3726

UNITED STATES PATENT AND TRADEMARK OFFICE

Commissioner for Patents
United States Patent and Trademark Office
P.O. Box 1450
Alexandria, VA 22313-1450
www.uspto.gov
DIW Oct-06

OGILVY RENAULT LLP
1981 MCGILL COLLEGE AVENUE
SUITE 1600
MONTREAL QC H3A 2Y3
CANADA

COPY MAILED

OCT 16 2006

OFFICE OF PETITIONS

In re Application of	:	
Lefebvre et al.	:	
Application No. 10/974,974	:	DECISION ON PETITION
Filed: 28 October, 2004	:	
Atty Docket No. 6078-11US-1	:	
CMB/AD	:	

This is a decision on the petition filed on 31 July, 2006, under 37 CFR 1.137(b),[1] to revive the above-identified application.

The petition is **GRANTED**.

---

[1] Effective December 1, 1997, the provisions of 37 CFR 1.137(b) now provide that where the delay in reply was unintentional, a petition may be filed to revive an abandoned application or a lapsed patent pursuant to 37 CFR 1.137(b). A grantable petition filed under the provisions of 37 CFR 1.137(b) must be accompanied by:

(1) the required reply, unless previously filed. In a nonprovisional application abandoned for failure to prosecute, the required reply may be met by the filing of a continuing application. In a nonprovisional utility or plant application filed on or after June 8, 1995, and abandoned for failure to prosecute, the required reply may also be met by the filing of a request for continuing examination in compliance with § 1.114. In an application or patent, abandoned or lapsed for failure to pay the issue fee or any portion thereof, the required reply must be the payment of the issue fee or any outstanding balance thereof. In an application, abandoned for failure to pay the publication fee, the required reply must include payment of the publication fee.

(2) the petition fee as set forth in 37 CFR 1.17(m);

(3) a statement that the entire delay in filing the required reply from the due date for the reply until the filing of a grantable petition pursuant to 37 CFR 1.137(b) was unintentional. The Commissioner may required additional information where there is a question whether the delay was unintentional; and

(4) any terminal disclaimer (and fee as set forth in 37 CFR 1.20(d)) required pursuant to 37 CFR 1.137(c)).

The application became abandoned on 13 March, 2006, for failure to timely reply to the non-final Office action mailed on 12 December, 2005, which set a three (3) month shortened statutory period for reply. No extensions of the time for reply under 37 CFR 1.136(a) were obtained. An untimely amendment was filed on 12 April, 2006. A Notice Requiring Extension of Time Fee—No New Time Period is Provided, was mailed on 21 July, 2006, informing petitioners that the amendment filed on 12 April, 2006, was received after the expiration of the period for reply set in the Office action.

Petitioners request that the amendment filed on 12 April, 2006, be considered as the required reply.

The statement contained in the instant petition does not set forth that the entire delay from the due date of the required reply to the date of the filing of a grantable petition was unintentional as required by 37 CFR 1.137(b)(3). However, the statement contained in the instant petition is being so construed. Petitioner **must** notify the Office if this is not a correct interpretation.

The application will be referred to Technology Center Art Unit 2863 for further processing.

Telephone inquiries concerning this matter may be directed to the undersigned at (571)272-3231.

D Wood

Douglas I. Wood
Senior Petitions Attorney
Office of Petitions

UNITED STATES PATENT AND TRADEMARK OFFICE

UNITED STATES DEPARTMENT OF COMMERCE
United States Patent and Trademark Office
Address: COMMISSIONER FOR PATENTS
P.O. Box 1450
Alexandria, Virginia 22313-1450
www.uspto.gov

APPLICATION NO.	FILING DATE	FIRST NAMED INVENTOR	ATTORNEY DOCKET NO.	CONFIRMATION NO.
10/974,980	10/28/2004	Jonathan Brotchie	39-298	3549

23117 7590 11/23/2009
NIXON & VANDERHYE, PC
901 NORTH GLEBE ROAD, 11TH FLOOR
ARLINGTON, VA 22203

EXAMINER
HUI, SAN MING R

ART UNIT	PAPER NUMBER
1628	

MAIL DATE	DELIVERY MODE
11/23/2009	PAPER

Please find below and/or attached an Office communication concerning this application or proceeding.

The time period for reply, if any, is set in the attached communication.

UNITED STATES PATENT AND TRADEMARK OFFICE

Commissioner for Patents
United States Patent and Trademark Office
P.O. Box 1450
Alexandria, VA 22313-1450
www.uspto.gov

NOV 2 3 2009

Mary J. Wilson
NIXON & VANDERHYE, PC
901 NORTH GLEBE ROAD, 11TH FLOOR
ARLINGTON VA 22203

In re Application of	:
Brotchie et al	:Decision on Petition
Serial No: 10/974,980	:
Filed: 28 October 2004	:
Attorney Docket No.: 39-298	:

This letter is in response to the Petition filed on 20 July 2009 to request issuance of a new office action setting new due date for response. This petition was only recently brought to the deciding official's attention. The resulting delay in this decision is regretted.

On 15 June 2009, the Office mailed to applicants a non-final Office action. Applicant provided a copy of the Office action which they received. The first three pages are identical to those which had been scanned in the USPTO electronic file wrapper. However, the remainder of the Office action received by applicants pertained to a different application altogether.

Accordingly, the petition is **GRANTED.**

The non-final Office action mailed 8 June 2009 is withdrawn as incomplete. The Office will mail a complete version of the corrected Office action out shortly, setting a new response time period. There is no fee for this petition.

Should there be any questions regarding this decision, please Quality Assurance Specialist Julie Burke, by mail addressed to Director, Technology Center 1600, PO BOX 1450, ALEXANDRIA, VA 22313-1450, or by telephone at (571) 272-0512 or by Official Fax at 571-273-8300.

Remy Yucel
Director, Technology Center 1600

UNITED STATES PATENT AND TRADEMARK OFFICE

Commissioner for Patents
United States Patent and Trademark Office
P.O. Box 1450
Alexandria, VA 22313-1450
www.uspto.gov

PATENTMETRIX
14252 CULVER DR. BOX 914
IRVINE CA 92604

COPY MAILED

JUL 18 2007

OFFICE OF PETITIONS

In re Application of	:	
Robert S. Silverman	:	
Application No. 10/974988	:	
Filing or 371(c) Date: 10/28/2004	:	DECISION ON
Attorney Docket Number: PLI-1270	:	PETITION

This is a decision in response to the correspondence entitled "Response to Examiner Communication (Submitted by Express Mail EQ 656881934 US and Fax), filed May 3, 2006. The correspondence is properly treated as a petition to withdraw the holding of abandonment based upon evidence that a reply was timely filed, under 37 CFR 1.181. The delay in treating this petition is regretted.

This Petition is hereby **dismissed**.

Any further petition for reconsideration must be submitted within TWO (2) MONTHS from the mail date of this decision. Extensions of time under 37 CFR 1.136(a) are permitted. The reconsideration request should include a cover letter entitled "Renewed Petition under [insert the applicable code section]." This is **not** final agency action within the meaning of 5 U.S.C. § 704.

Background

The above-identified application became abandoned for failure to timely and properly reply to the non-final Office action, mailed October 4, 2005. The Office action set a shortened statutory reply period of three (3) months, and provided for extensions of time under 37 CFR 1.136(a). No reply having been received, the application became abandoned January 5, 2006. A Notice of Abandonment was mailed April 19, 2006.

The present petition

Applicant files the present petition and asserts that a reply to the Office action was timely filed on February 3, 2006, and included a certificate of mailing under 37 CFR 1.8(a). Applicant attests on a personal knowledge basis to the mailing of the correspondence on February 3, 2006. Applicant also files a copy of the reply that was putatively filed on February 3, 2006.

Applicable Law, Rules and MPEP

The MPEP, 711.03(c), Petition To Withdraw Holding of Abandonment Based on Evidence That a Reply Was Timely Mailed or Filed, states:

> 37 CFR 1.10(c) through 1.10(e) and 1.10(g) set forth procedures for petitioning the Director of the USPTO to accord a filing date to correspondence as of the date of deposit of the correspondence as "Express Mail." A petition to withdraw the holding of abandonment relying upon a timely reply placed in "Express Mail" must include an appropriate petition under 37 CFR 1.10(c), (d), (e), or (g) (see MPEP § 513). When a paper is shown to have been mailed to the Office using the "Express Mail" procedures, the paper must be entered in PALM with the "Express Mail" date.
> Similarly, applicants may establish that a reply was filed with a postcard receipt that properly identifies the reply and provides prima facie evidence that the reply was timely filed. See MPEP § 503. For example, if the application has been held abandoned for failure to file a reply to a first Office action, and applicant has a postcard receipt showing that an amendment was timely filed in response to the Office action, then the holding of abandonment should be withdrawn upon the filing of a petition to withdraw the holding of abandonment. When the reply is shown to have been timely filed based on a postcard receipt, the reply must be entered into PALM using the date of receipt of the reply as shown on the post card receipt.
>
> Where a certificate of mailing under 37 CFR 1.8, but not a postcard receipt, is relied upon in a petition to withdraw the holding of abandonment, see 37 CFR 1.8(b) and MPEP § 512. As stated in 37 CFR 1.8(b)(3) the statement that attests to the previous timely mailing or transmission of the correspondence must be on a personal knowledge basis, or to the satisfaction of the Director of the USPTO. If the statement attesting to the previous timely mailing is not made by the person who signed the Certificate of Mailing (i.e., there is no personal knowledge basis), then the statement attesting to the previous timely mailing should include evidence that supports the conclusion that the correspondence was actually mailed (e.g., copies of a mailing log establishing that correspondence was mailed for that application). When the correspondence is shown to have been timely filed based on a certificate of mailing, the correspondence is entered into PALM with the actual date of receipt (i.e., the date that the duplicate copy of the papers was filed with the statement under 37 CFR 1.8).
> 37 CFR 1.8(b) also permits applicant to notify the Office of a previous mailing or transmission of correspondence and submit a statement under 37 CFR 1.8(b)(3) accompanied by a duplicate copy of the correspondence when a reasonable amount of time (e.g., more than one month) has elapsed from the time of mailing or transmitting of the correspondence. Applicant does not have to wait until the application becomes abandoned before notifying the Office of the previous mailing or transmission of the correspondence. Applicant should check the private Patent Application Information Retrieval (PAIR) system for the status of the correspondence before notifying the Office. See MPEP § 512.

MPEP, 711.03(c)

37 CFR 1.8(b), Certificate of mailing or transmission; .The MPEP 711.03(c)A, Petition To Withdraw Holding of Abandonment Based on Failure To Receive Office Action, explains that

> (b) In the event that correspondence is considered timely filed by being mailed or transmitted in accordance with paragraph (a) of this section, but not received in the U.S. Patent and Trademark Office after a reasonable amount of time has elapsed from the time of mailing or transmitting of the correspondence, or after the application is held to be abandoned, or after the proceeding is dismissed, terminated, or decided with prejudice, the correspondence will be considered timely if the party who forwarded such correspondence:
> (1) Informs the Office of the previous mailing or transmission of the correspondence promptly after becoming aware that the Office has no evidence of receipt of the correspondence;
> (2) Supplies an additional copy of the previously mailed or transmitted correspondence **and certificate**; and
> (3) Includes a statement which attests on a personal knowledge basis or to the satisfaction of the Director to the previous timely mailing or transmission. If the correspondence was sent by facsimile transmission, a copy of the sending unit's report confirming transmission may be used to support this statement.
> (c) The Office may require additional evidence to determine if the correspondence was timely filed. (Emphasis supplied).

37 CFR 1.8(b)

Analysis

A review of office records reveals that no reply to the October 4, 2005 Office action was received on February 3, 2006[1].

A review of the reply filed with the petition reveals that, while it is dated February 3, 2006, it does not contain a certificate of mailing or transmission in accordance with 37 CFR 1.8.

Applicant has filed a copy of a facsimile coversheet that contains the date February 3, 2006; however, no certificate of mailing or transmission under 37 CFR 1.8 has been located thereon.

Applicant has, therefore, failed to demonstrate compliance with 37 CFR 1.10 (filing of the correspondence by Express Mail), or 37 CFR 1.8 (filing of correspondence using the certificate of mail procedures). As such, Applicant has failed to demonstrate that a reply to the Office action was timely mailed or filed. Accordingly, the date of receipt, April 26, 2006, is the date is accorded as the filing date. See, 37 CFR 1.6.

The petition is dismissed without prejudice. If Applicant has evidence that a reply was timely mailed or filed, Applicant should include such evidence in a request for reconsideration of petition.

[1] The reply to the October 4, 2005 Office action was first received in this Office on April 26, 2006.

Alternative venue

If Applicant is unable to demonstrate compliance with 37 CFR §§ 1.10 or 1.8, Applicant is strongly urged to file a petition stating that the delay was unintentional. An "unintentional" petition under 37 CFR 1.137(b) must be accompanied by the required fee, currently $750.00.

The filing of a petition under 37 CFR 1.137(b) cannot be intentionally delayed and therefore must be filed promptly. A person seeking revival due to unintentional delay can not make a statement that the delay was unintentional unless the entire delay, including the delay from the date it was discovered that the application was abandoned until the filing of the petition to revive under 37 CFR 1.137(b), was unintentional. A statement that the delay was unintentional is not appropriate if petitioner intentionally delayed the filing of a petition for revive under 37 CFR 1.137(b).

Further correspondence with respect to this matter should be addressed as follows:

By mail: Director for Patents
PO Box 1450
Alexandria, VA 22313-1450

By FAX: (571) 273-8300
Attn: Office of Petitions

By hand: Customer Service Window
Randolph Building
401 Dulany Street
Alexandria, VA 22314

Telephone inquiries concerning this matter should be directed to the undersigned at (571) 272-3232.

Derek L. Woods
Attorney
Office of Petitions

UNITED STATES PATENT AND TRADEMARK OFFICE

Commissioner for Patents
United States Patent and Trademark Office
P.O. Box 1450
Alexandria, VA 22313-1450
www.uspto.gov

PATENTMETRIX
14252 CULVER DR. BOX 914
IRVINE CA 92604

COPY MAILED

NOV 0 9 2007

OFFICE OF PETITIONS

In re Application of	:	
Robert S. Silverman	:	
Application No. 10/974988	:	
Filing or 371(c) Date: 10/28/2004	:	DECISION ON
Attorney Docket Number: PLI-1270	:	PETITION

This is a decision in response to the Petition to Revive Under 37 C.F.R. Section 1.137(b), filed August 14, 2007.

This Petition is hereby **granted**.

The above-identified application became abandoned for failure to timely and properly reply to the non-final Office action, mailed October 4, 2005. The Office action set a shortened statutory reply period of three (3) months, and provided for extensions of time under 37 CFR 1.136(a). No reply having been received, the application became abandoned January 5, 2006. A Notice of Abandonment was mailed April 19, 2006.

A petition to withdraw the holding of abandonment filed May 3, 2006, was dismissed in a Decision mailed July 18, 2007, for failing to meet the requirements for a grantable petition under 37 CFR 1.181.

Applicant files the present petition and includes an Amendment in response to the Office action. The petition satisfies the conditions for revival pursuant to the provisions of 37 CFR 1.137(b) in that the petition includes (1) the reply; (2) the petition fee; and (3) the required statement of unintentional delay[1]. Accordingly, the reply is accepted as having been unintentionally delayed.

The application is being referred to Technology Center Art Unit 3722 for **processing of the Amendment filed August 14, 2007** with the petition, in due course.

[1] 37 CFR 1.137(b)(3) requires a statement that "the entire delay in filing the required reply from the due date for the reply until the filing of a grantable petition pursuant to 37 CFR 1.137(b) was unintentional." Since the statement appearing in the petition varies from the language required by 37 CFR 1.137(b)(3), the statement is being construed as the required statement. Petitioner must notify the Office if this is **not** a correct reading of the statement appearing in the petition.

Telephone inquiries concerning this decision should be directed to the undersigned at (571) 272-3232.

Derek L. Woods
Attorney
Office of Petitions

UNITED STATES PATENT AND TRADEMARK OFFICE

UNITED STATES DEPARTMENT OF COMMERCE
United States Patent and Trademark Office
Address: COMMISSIONER FOR PATENTS
P.O. Box 1450
Alexandria, Virginia 22313-1450
www.uspto.gov

BUCHANAN, INGERSOLL & ROONEY PC
POST OFFICE BOX 1404
ALEXANDRIA, VA 22313-1404

Mail Date: 04/20/2010

Applicant	: Katsuhiko Matsusaka	: DECISION ON REQUEST FOR
Patent Number	: 7584199	: RECALCULATION of PATENT
Issue Date	: 09/01/2009	: TERM ADJUSTMENT IN VIEW
Appliction No	: 10/975,007	: OF WYETH AND NOTICE OF INTENT TO
Filed	: 10/28/2004	: ISSUE CERTIFICATE OF CORRECTION
		:

The Request for Recalculation is **GRANTED** to the extent indicated.

The patent term adjustment has been determined to be **518** days. The USPTO will *sua sponte* issue a certificate of correction reflecting the amount of PTA days determined by the recalculation.

Prior to the issuance of the certificate of correction, the USPTO will afford patentee an opportunity to be heard and request reconsideration. Accordingly, patentee has **one month or thirty (30) days**, whichever is longer, to file a request for reconsideration of this patent term adjustment calculation. See 35 U.S.C. 154(b)(3)(B)(ii) and 37 CFR 1.322(a)(4). No extensions of time will be granted under 37 CFR 1.136.

Patentee should use document code PET.OP if electronically filing a request for reconsideration of this patent term adjustment calculation. The patentee must also include the information required by 37 CFR 1.705(b)(2) and the fee required by 37 CFR 1.18(e). If patentee does not file a timely request for reconsideration of this patent term adjustment calculation including the information required by 37 CFR 1.705(b)(2) and the fee required by 37 CFR 1.18(e), the USPTO will issue a certificate of correction reflecting the PTA determination noted above.

Patentee should be aware that in order to preserve the right to review in the United States District Court for the District of Columbia of the USPTO patent term adjustment determination, patentee must ensure that he or she also take the steps required under 35 U.S.C. 154(b)(4)(A) in a timely manner. Nothing in the request for recalculation should be construed as providing an alternative time frame for commencing a civil action under 35 U.S.C. 154(b)(4)(A).

Any questions concerning this decision should be directed to the Office of Patent Legal Administration at 571-272-7702.

UNITED STATES PATENT AND TRADEMARK OFFICE

Commissioner for Patents
United States Patent and Trademark Office
P.O. Box 1450
Alexandria, VA 22313-1450
www.uspto.gov

Sr. Group Patent Counsel
Balck & Decker Corporation
701 E. Joppa Rd
Mail Stop TW199
Towson MD 21286

COPY MAILED

NOV 15 2007

OFFICE OF PETITIONS

In re Application of	:	
Mike Wilson	:	
Application No. 10/975,063	:	DECISION ON PETITION
Filed: October 26, 2004	:	
Attorney Docket No.	:	
P-US-PR 1086		

This is a decision on the petition under 37 CFR 1.137(b), filed April 9, 2007, to revive the above-identified application.

The petition is **GRANTED.**

The application became abandoned for failure to reply in a timely manner to the non-final Office action mailed April 18, 2006, which set a shortened statutory period for reply of three (3) months. No extensions of time were obtained under the provisions of 37 CFR 1.136(a). Accordingly, the application became abandoned on July 19, 2006. A Notice of Abandonment was mailed on November 15, 2006.

The petition satisfies the requirements of 37 CFR 1.137(b) in that petitioner has supplied (1) a reply in the form of an amendment, (2) the petition fee of $1,500, and (3) a proper statement of unintentional delay. Accordingly, the failure to timely reply to the non-final Office action of April 18, 2006 is accepted as being unintentionally delayed.

An extension of time under 37 CFR 1.136 must be filed prior to the expiration of the maximum extendable period for reply. *See* In re Application of S, 8 USPQ2d 1630, 1631 (Comm'r Pats. 1988). Since the $1,020 extension of time fee submitted with the petition on April 9, 2007 was subsequent to the maximum extendable period for reply, this fee is unnecessary and will be credited to petitioner's deposit account in due course.

This application is being referred to Technology Center AU 3724 for appropriate action in the normal course of business on the reply received April 9, 2006.

Telephone inquiries concerning this decision should be directed to the undersigned at (571) 272-3218.

Frances Hicks
Petitions Examiner
Office of Petitions

UNITED STATES PATENT AND TRADEMARK OFFICE

UNITED STATES DEPARTMENT OF COMMERCE
United States Patent and Trademark Office
Address: COMMISSIONER FOR PATENTS
P.O. Box 1450
Alexandria, Virginia 22313-1450
www.uspto.gov

STERNE, KESSLER, GOLDSTEIN & FOX P.L.L.C.
1100 NEW YORK AVENUE, N.W.
WASHINGTON, DC 20005

Mail Date: 04/21/2010

Applicant	: Kan Frankie Fan	: DECISION ON REQUEST FOR
Patent Number	: 7636372	: RECALCULATION of PATENT
Issue Date	: 12/22/2009	: TERM ADJUSTMENT IN VIEW
Appliction No	: 10/975,070	: OF WYETH AND NOTICE OF INTENT TO
Filed	: 10/28/2004	: ISSUE CERTIFICATE OF CORRECTION
		:

The Request for Recalculation is **GRANTED** to the extent indicated.

The patent term adjustment has been determined to be **1304** days. The USPTO will *sua sponte* issue a certificate of correction reflecting the amount of PTA days determined by the recalculation.

Prior to the issuance of the certificate of correction, the USPTO will afford patentee an opportunity to be heard and request reconsideration. Accordingly, patentee has **one month or thirty (30) days**, whichever is longer, to file a request for reconsideration of this patent term adjustment calculation. See 35 U.S.C. 154(b)(3)(B)(ii) and 37 CFR 1.322(a)(4). No extensions of time will be granted under 37 CFR 1.136.

Patentee should use document code PET.OP if electronically filing a request for reconsideration of this patent term adjustment calculation. The patentee must also include the information required by 37 CFR 1.705(b)(2) and the fee required by 37 CFR 1.18(e). If patentee does not file a timely request for reconsideration of this patent term adjustment calculation including the information required by 37 CFR 1.705(b)(2) and the fee required by 37 CFR 1.18(e), the USPTO will issue a certificate of correction reflecting the PTA determination noted above.

Patentee should be aware that in order to preserve the right to review in the United States District Court for the District of Columbia of the USPTO patent term adjustment determination, patentee must ensure that he or she also take the steps required under 35 U.S.C. 154(b)(4)(A) in a timely manner. Nothing in the request for recalculation should be construed as providing an alternative time frame for commencing a civil action under 35 U.S.C. 154(b)(4)(A).

Any questions concerning this decision should be directed to the Office of Patent Legal Administration at 571-272-7702.

UNITED STATES PATENT AND TRADEMARK OFFICE

Commissioner for Patents
United States Patent and Trademark Office
P.O. Box 1450
Alexandria, VA 22313-1450
www.uspto.gov

FINNEGAN HENDERSON FARABOW
GARRETT & DUNNER LLP
901 NEW YORK AVENUE, NW
WASHINGTON, DC 20001-4413

COPY MAILED

NOV 0 8 2005

OFFICE OF PETITIONS

In re Application of	:
Masahiko Hasunuma et al	:
Application No. 10/975,071	: DECISION GRANTING PETITION
Filed: October 28, 2004	: UNDER 37 CFR 1.313(c)(2)
Attorney Docket No. 04329.3438	:

This is a decision on the petition, filed November 7, 2005, which is being treated as a petition under 37 CFR 1.313(c)(2) to withdraw the above-identified application from issue after payment of the issue fee.

The petition is **GRANTED**.

The above-identified application is withdrawn from issue for consideration of a submission under 37 CFR 1.114 (request for continued examination). See 37 CFR 1.313(c)(2).

Petitioner is advised that the issue fee paid on October 13, 2005 in the above-identified application cannot be refunded. If, however, the above-identified application is again allowed, petitioner may request that it be applied towards the issue fee required by the new Notice of Allowance.[1]

Telephone inquiries should be directed to the undersigned at (571) 272-3218.

This matter is being referred to Technology Center AU 2815 for processing of the request for continued examination under 37 CFR 1.114 and for consideration of the Information Disclosure Statement.

Frances Hicks
Petitions Examiner
Office of Petitions

---

[1] *The request to apply the issue fee to the new Notice may be satisfied by completing and returning the new Issue Fee Transmittal Form PTOL-85(b) (along with any balance due or the amount due at the time of payment), which includes the following language thereon: "Commissioner for Patents is requested to apply the Issue Fee and Publication Fee (if any) or re-apply any previously paid issue fee to the application identified above." Petitioner is advised that, whether a fee is indicated as being due or not, the Issue Fee Transmittal Form* ***must*** *be completed and timely submitted to avoid abandonment. Note the language in bold text on the first page of the Notice of Allowance and Fee(s) Due (PTOL-85).*

UNITED STATES PATENT AND TRADEMARK OFFICE

Commissioner for Patents
United States Patent and Trademark Office
P.O. Box 1450
Alexandria, VA 22313-1450
www.uspto.gov

FOLEY AND LARDNER LLP
SUITE 500
3000 K STREET NW
WASHINGTON, DC 20007

MAILED

SEP 11 2009

OFFICE OF PETITIONS

In re Patent No. 7,439,036 :
Norihiko Hirata :
Application No. 10/975,076 :
Issue Date: October 21, 2008 :
Filed: October 28, 2004 :
Attorney Docket No.023174-0119:

DECISION DISMISSING REQUEST FOR RECONSIDERATION OF PATENT TERM ADJUSTMENT

This is in response to the REQUEST FOR RECONSIDERATION OF PATENT TERM ADJUSTMENT UNDER 37 C.F.R. § 1.705, filed November 5, 2008, which is properly treated pursuant to 37 CFR 1.705(d). Patentee requests that the determination of patent term adjustment be corrected from three hundred nineteen (319) days to six hundred seventy-eight (678) days.

The request for reconsideration of patent term adjustment is **DISMISSED** with respect to making any change in the patent term adjustment determination under 35 U.S.C. § 154(b) of 319 days.

BACKGROUND

This application was filed on October 28, 2004. On October 21, 2008, the application matured into U.S. Patent No. 7,439,036, with a revised patent term adjustment of 319 days. The Office determined that the 359 days of Office delay, pursuant to 35 U.S.C. 154(b)(1)(B) and 37 CFR 1.702(b),[1] overlaps with the 378

[1] Pursuant to 35 U.S.C. 154(b)(1)(B), 37 CFR 1.702(b) provides:

> Failure to issue a patent within three years of the actual filing date of the application. Subject to the provisions of 35 U.S.C. 154(b) and this subpart, the term of an original patent shall be adjusted if the issuance of the patent was delayed due to the failure of the Office to issue a patent within three years after the date on which the application was filed under 35 U.S.C. 111(a) or the national stage commenced under 35 U.S.C. 371(b) or (f) in an international application, but not including:

days of Office delay,[2] pursuant to 35 U.S.C. 154(b)(1)(A) and 37 CFR 1.702(a)(1),[3] accorded during the pendency of the application. As such, the Office allowed entry of only the period of adjustment of 378 days. No additional days of patent term adjustment were entered at issuance under the three-year pendency provision. The patent issued with a revised patent term adjustment of 319 days (378 days of Office delay - 59 days of applicant delay.)

On November 5, 2008, patentee timely submitted this request for reconsideration of patent term adjustment (with required fee), asserting that the correct number of days of Patent Term Adjustment is 678 days under the court's interpretation of the overlap provision as set forth in Wyeth v. Dudas, 580 F. Supp. 2d 138, 88 U.S.P.Q. 2d 1538 (D.D.C. 2008). Patentee asserts that pursuant to Wyeth, a PTO delay under §154(b)(1)(A) overlaps with a delay under §154(b)(1)(B) only if the delays "occur on the same day." Patentee maintains that the total non-overlapping PTO delay under §154(b)(1)(A) & (B) is 737 (378 +

---

(1) Any time consumed by continued examination of the application under 35 U.S.C. 132(b);

(2) Any time consumed by an interference proceeding under 35 U.S.C. 135(a);

(3) Any time consumed by the imposition of a secrecy order under 35 U.S.C. 181;

(4) Any time consumed by review by the Board of Patent Appeals and Interferences or a Federal court; or

(5) Any delay in the processing of the application by the Office that was requested by the applicant.

[2] A restriction requirement was mailed on January 10, 2007, 14 months and 378 days after the application was filed on October 28, 2004.

[3] 37 CFR 1.702, provides grounds for adjustment of patent term due to examination delay under the Patent Term Guarantee Act of 1999 (original applications, other than designs, filed on or after May 29, 2000).

(a) Failure to take certain actions within specified time frames. Subject to the provisions of 35 U.S.C. 154(b) and this subpart, the term of an original patent shall be adjusted if the issuance of the patent was delayed due to the failure of the Office to:

(1) Mail at least one of a notification under 35 U.S.C. 132 or a notice of allowance under 35 U.S.C. 151 not later than fourteen months after the date on which the application was filed under 35 U.S.C. 111(a) or fulfilled the requirements of 35 U.S.C. 371 in an international application;

359) days as these periods do not occur on the same day. Patentee asserts entitlement to 678 (Office delay of 378 + 359 days - applicant delay of 59 days) days of patent term adjustment.

OPINION

Patentee's interpretation of the period of overlap has been considered, but found inconsistent with the Office's interpretation of the overlap provision, 35 U.S.C. 154(b)(2)(A). 35 U.S.C. 154(b)(2)(A) limits the adjustment of patent term, as follows:

> to the extent that the periods of delay attributable to grounds specified in paragraph (1) overlap, the period of any adjustment granted under this subsection shall not exceed the actual number of days the issuance of the patent was delayed.

As explained in *Explanation of 37 CFR 1.703(f)*[4] *and of the United States Patent and Trademark Office Interpretation of 35 U.S.C. 154(b)(2)(A)*, 69 Fed. Reg. 34283 (June 21, 2004), the Office interprets 35 U.S.C. 154(b)(2)(A) as permitting either patent term adjustment under 35 U.S.C. 154(b)(1)(A)(i)-(iv), or patent term adjustment under 35 U.S.C. 154(b)(1)(B), but not as permitting patent term adjustment under both 35 U.S.C. 154(b)(1)(A)(i)-(iv) and 154(b)(1)(B). Accordingly, the Office implements the overlap provision as follows:

> If an application is entitled to an adjustment under 35 U.S.C. 154(b)(1)(B), the entire period during which the application was pending (except for periods excluded under 35 U.S.C. 154(b)(1)(B)(i)-(iii)), and not just the period beginning three years after the actual filing date of the application, is the period of delay under 35 U.S.C. 154(b)(1)(B) in determining whether periods of delay overlap under 35 U.S.C. 154(b)(2)(A). Thus, any days of delay for Office issuance of the patent more than 3 years

---

[4] Likewise, 37 CFR 1.703(f) provides that:

> To the extent that periods of delay attributable to the grounds specified in §1.702 overlap, the period of adjustment granted under this section shall not exceed the actual number of days the issuance of the patent was delayed.

> after the filing date of the application, which overlap with the days of patent term adjustment accorded prior to the issuance of the patent will not result in any additional patent term adjustment. See 35 U.S.C. 154(b)(1)(B), 35 U.S.C. 154(b)(2)(A), and 37 CFR § 1.703(f). See *Changes to Implement Patent Term Adjustment Under Twenty Year Term; Final Rule*, 65 Fed. Reg. 56366 (Sept. 18, 2000). See also *Revision of Patent Term Extension and Patent Term Adjustment Provisions; Final Rule*, 69 Fed. Reg. 21704 (April 22, 2004), 1282 Off. Gaz. Pat. Office 100 (May 18, 2004). See also *Explanation of 37 CFR 1.703(f) and of the United States Patent and Trademark Office Interpretation of 35 U.S.C. 154(b)(2)(A)*, 69 Fed. Reg. 34283 (June 21, 2004).

Further, as stated in the *Explanation of 37 CFR 1.703(f) and of the United States Patent and Trademark Office Interpretation of 35 U.S.C. 154(b)(2)(A)*, the Office has consistently taken the position that if an application is entitled to an adjustment under the three-year pendency provision of 35 U.S.C. 154(b)(1)(B), the entire period during which the application was pending before the Office (except for periods excluded under 35 U.S.C. 154(b)(1)(B)(i)-(iii)), and not just the period beginning three years after the actual filing date of the application, is the relevant period under 35 U.S.C. 154(b)(1)(B) in determining whether periods of delay "overlap" under 35 U.S.C. 154(b)(2)(A).

This interpretation is consistent with the statute. Taken together the statute and rule provide that to the extent that periods of delay attributable to grounds specified in 35 U.S.C. 154(b)(1) and in corresponding §1.702 overlap, the period of adjustment granted shall not exceed the actual number of days the issuance of the patent was delayed.

In this instance, the relevant period under 35 U.S.C. 154(b)(1)(B) in determining whether periods of delay "overlap" under 35 U.S.C. 154(b)(2)(A) is the period during which the application was pending before the Office beginning on the application filing date under 35 U.S.C. 111(a), October 28, 2004, and ending on the date the patent issued, October 21, 2008,(not including any other periods excluded under 35 U.S.C. 154(b)(1)(B)(i)-(iii)).

Pursuant to 35 U.S.C. 154(b)(1)(A) and 37 CFR 1.702(a)(1), 378 days of patent term adjustment were accorded during the pendency

of the application for Office delay prior to the issuance of patent. Pursuant to 35 U.S.C. 154(b)(1)(B) and 37 CFR 1.702(b), 359 days of patent term adjustment accrued for Office issuance of the patent more than 3 years after the filing date of the application.

All of the 359 days of patent term adjustment under 37 CFR 1.702(b) overlap with the 378 days of patent term adjustment under 37 CFR 1.702(a)(1). Entry of both the 378 days and the 359 days is neither permitted nor warranted. 378 days is the actual number of days issuance of the patent was delayed.

Accordingly, at issuance, the Office properly entered 319 days of patent term adjustment (378 days of Office delay - 59 days of applicant delay).

CONCLUSION

In view thereof, the Office affirms that the revised determination of patent term adjustment at the time of the issuance of the patent is 319 days.

The Office acknowledges submission of the $200.00 fee set forth in 37 CFR 1.18(e). No additional fees are required.

Telephone inquiries specific to this matter should be directed to Kenya A. McLaughlin, Petitions Attorney, at (571) 272-3222.

Christina Tartera Donnell

Christina Tartera Donnell
Senior Petitions Attorney
Office of Petitions

UNITED STATES PATENT AND TRADEMARK OFFICE

Commissioner for Patents
United States Patent and Trademark Office
P.O. Box 1450
Alexandria, VA 22313-1450
www.uspto.gov

FOLEY AND LARDNER LLP
SUITE 500
3000 K STREET NW
WASHINGTON DC 20007

MAILED

JUN 14 2010

OFFICE OF PETITIONS

In re Patent No. 7,439,036	:	DECISION ON REQUEST
Norihiko Hirata	:	FOR
Issue Date: October 21, 2008	:	RECONSIDERATION OF
Application No. 10/975,076	:	PATENT TERM ADJUSTMENT
Filed: October 28, 2004	:	and
Atty Docket No. 023174-0119	:	NOTICE OF INTENT TO ISSUE
	:	CERTIFICATE OF CORRECTION

This is a decision on the petition filed on October 13, 2009, which is being treated as a petition under 37 CFR 1.705(d) requesting that the patent term adjustment indicated on the above-identified patent be corrected to indicate that the term of the above-identified patent is extended or adjusted by six hundred and seventy-eight(678) days.

The petition to correct the patent term adjustment indicated on the above-identified patent to indicate that the term of the above-identified patent is extended or adjusted **by six hundred and seventeen (617) days is GRANTED to the extent indicated herein.**

It is noted that patentees failed to account for the filing of the notice of appeal on May 23, 2008. The Office reminds patentees that the period consumed by appellate review, whether successful or not, is excluded from the calculation of B delay. See 35 U.S.C. 154(b)(1)(B)(ii). In this instance, the period consumed by appellate review is 61 days, beginning on the date on which the notice of appeal to the Board of Patent Appeals and Interferences was filed, May 23, 2008, and ending on the Notice of Allowance was mailed, July 23, 2008. Thus, the B delay is 298 days (359 - 61). Accordingly, the patent term adjustment is

617 days (378 days of A delay + 298 days of B delay - 0 days of overlap - 59 days of applicant delay).

The Office will *sua sponte* issue a certificate of correction. Pursuant to 37 CFR 1.322, the Office will not issue a certificate of correction without first providing assignee or patentee an opportunity to be heard. Accordingly, patentees are given **one (1) month or thirty (30) days**, whichever is longer, from the mail date of this decision to respond. No extensions of time will be granted under § 1.136.

Deposit account 19-0741 will be charged $200.00 for the fee set forth in 37 CFR 1.18(e). No additional fees are required.

The application is being forwarded to the Certificates of Corrections Branch for issuance of a certificate of correction. The Office will issue a certificate of correction indicating that the term of the above-identified patent is extended or adjusted by **six hundred and seventeen (617) days**

Telephone inquiries specific to this matter should be directed to the undersigned at (571) 272-3222.

Kenya A. McLaughlin
Petitions Attorney
Office of Petitions

Enclosure: Copy of DRAFT Certificate of Correction

DRAFT COPY

UNITED STATES PATENT AND TRADEMARK OFFICE

CERTIFICATE OF CORRECTION

PATENT : 7,439,036 B2

DATED : Oct. 21, 2008

INVENTOR(S) : Hirata

It is certified that error appears in the above-identified patent and that said Letters Patent is hereby corrected as shown below:

On the cover page,

[*] Notice: Subject to any disclaimer, the term of this patent is extended or adjusted under 35 USC 154(b) by (319) days

Delete the phrase "by 319 days" and insert – by 617 days--

UNITED STATES PATENT AND TRADEMARK OFFICE

Commissioner for Patents
United States Patent and Trademark Office
P.O. Box 1450
Alexandria, VA 22313-1450
www.uspto.gov

DEPT. OF THE NAVY/NAVAL AIR SYSTEMS COMMAND
AIR-11.2
47123 BUSE ROAD/BUILDING 2272/SUITE 257
PATUXENT RIVER, MD 20670-1547

COPY MAILED

JUN 20 2008

OFFICE OF PETITIONS

In re Application of :
John Paul Schofield III, et al. :
Application No. 10/975,126 :
Filed: October 25, 2004 :
Attorney Docket No. NC84944 :

ON PETITION

This is a decision in response to the petition, filed March 11, 2008, to revive the above-identified application under the provisions of 37 CFR 1.137(b).

The petition is **GRANTED**.

The above-identified application became abandoned for failure to reply in a timely manner to the non-final Office action mailed December 26, 2006, which set a shortened statutory period for reply of one (1) month or thirty (30) days (whichever is later). A Notice of Abandonment was mailed on September 13, 2007. In response, on March 11, 2008 the present petition was filed.

The petition satisfies the requirements of 37 CFR 1.137(b) in that petitioner has supplied (1) the response in the form of an election of the invention to be examined; (2) the petition fee of $1,540; and (3) an adequate statement of unintentional delay.

The application is being referred to Technology Center AU 2858 for appropriate action by the Examiner in the normal course of business on the reply received March 11, 2008.

Telephone inquiries concerning this decision may be directed to the undersigned at (571) 272-3204. All other inquiries regarding this application should be directed to the Technology Center.

Sherry D. Brinkley
Petitions Examiner
Office of Petitions

UNITED STATES PATENT AND TRADEMARK OFFICE

UNITED STATES DEPARTMENT OF COMMERCE
United States Patent and Trademark Office
Address: COMMISSIONER FOR PATENTS
P.O. Box 1450
Alexandria, Virginia 22313-1450
www.uspto.gov

DEPT. OF THE NAVY/NAVAL AIR SYSTEMS COMMAND
AIR-11.2
47123 BUSE ROAD/BUILDING 2272/SUITE 257
PATUXENT RIVER, MD 20670-1547

Mail Date: 04/21/2010

Applicant	: John Paul Schofield III	: DECISION ON REQUEST FOR
Patent Number	: 7616004	: RECALCULATION of PATENT
Issue Date	: 11/10/2009	: TERM ADJUSTMENT IN VIEW
Appliction No	: 10/975,126	: OF WYETH AND NOTICE OF INTENT TO
Filed	: 10/25/2004	: ISSUE CERTIFICATE OF CORRECTION
		:

The Request for Recalculation is **GRANTED** to the extent indicated.

The patent term adjustment has been determined to be **1085** days. The USPTO will *sua sponte* issue a certificate of correction reflecting the amount of PTA days determined by the recalculation.

Prior to the issuance of the certificate of correction, the USPTO will afford patentee an opportunity to be heard and request reconsideration. Accordingly, patentee has **one month or thirty (30) days**, whichever is longer, to file a request for reconsideration of this patent term adjustment calculation. See 35 U.S.C. 154(b)(3)(B)(ii) and 37 CFR 1.322(a)(4). No extensions of time will be granted under 37 CFR 1.136.

Patentee should use document code PET.OP if electronically filing a request for reconsideration of this patent term adjustment calculation. The patentee must also include the information required by 37 CFR 1.705(b)(2) and the fee required by 37 CFR 1.18(e). If patentee does not file a timely request for reconsideration of this patent term adjustment calculation including the information required by 37 CFR 1.705(b)(2) and the fee required by 37 CFR 1.18(e), the USPTO will issue a certificate of correction reflecting the PTA determination noted above.

Patentee should be aware that in order to preserve the right to review in the United States District Court for the District of Columbia of the USPTO patent term adjustment determination, patentee must ensure that he or she also take the steps required under 35 U.S.C. 154(b)(4)(A) in a timely manner. Nothing in the request for recalculation should be construed as providing an alternative time frame for commencing a civil action under 35 U.S.C. 154(b)(4)(A).

Any questions concerning this decision should be directed to the Office of Patent Legal Administration at 571-272-7702.

UNITED STATES PATENT AND TRADEMARK OFFICE

Commissioner for Patents
United States Patent and Trademark Office
P.O. Box 1450
Alexandria, VA 22313-1450
www.uspto.gov

JUL 2 1 2005

GEORGE A LEONE, SR
2150 128TH AVENUE, NW
MINNEAPOLIS MN 55448

In re Application of	:	
Mark E. Fauver	:	
Serial No.: 10/975,162	:	DECISION ON PETITION
Filed: October 28, 2004	:	
For: Improvements for Optical Projection	:	
Tomography	:	

This is in response to applicants' petition filed October 28, 2004, to make the above-identified application special under the provisions of 37 CFR 1.102(c), based on the merits as it relates HIV/AIDS.

Applicant has satisfied the provisions set forth in M.P.E.P. 708.02, X. Therefore the petition is **GRANTED**.

The application will be forwarded to the examiner for action on the merits commensurate with this decision.

Should there be any questions with regard to this letter please contact Frederick Schmidt by letter addressed to the Director, Technology Center 3700, P.O. Box 1450 Alexandria, VA 22313-1450 or by telephone at (571) 272-2975 or by facsimile transmission at (571) 273-8300.

Frederick R. Schmidt

Frederick R. Schmidt, Director
Technology Center 3700

UNITED STATES PATENT AND TRADEMARK OFFICE

Commissioner for Patents
United States Patent and Trademark Office
P.O. Box 1450
Alexandria, VA 22313-1450
www.uspto.gov

ZILKA-KOTAB, PC
P.O. BOX 721120
SAN JOSE, CA 95172-1120

MAILED

JAN 30 2009

OFFICE OF PETITIONS

In re Application of	:	
Alan Meissner	:	
Application No. 10/975,176	:	DECISION ON PETITION
Filed: October 27, 2004	:	TO WITHDRAW
Attorney Docket No. MEISP001	:	FROM RECORD
	:	

This is a decision on the Request to Withdraw as attorney or agent of record under 37 C.F.R. § 1.36(b), filed November 5, 2008

The request is **NOT APPROVED**.

A grantable request to withdraw as attorney/agent of record must be signed by every attorney/agent seeking to withdraw or contain a clear indication that one attorney is signing on behalf of another/others.

The request cannot be approved because the practitioners have not certified that he, she or they have: (1) given reasonable notice to the client, prior to the expiration of the reply period that the practitioner (s) intends to withdraw from employment; (2) delivered to the client or a duly authorized representative of the client all papers and property (including funds) to where the client is entitled; and (3) notified the client of any replies that may be due an the time frame within which the client must respond. It is noted that submitting a false certification may violate a practitioner's duty under 37 CFR 10.23(b)(4) and (b)(5).

All future communications from the Office will continue to be directed to the above-listed address until otherwise notified by applicant.

Telephone inquiries concerning this decision should be directed to undersigned at 571-272-1642.

/AMW/
April M. Wise
Petitions Examiner
Office of Petitions

Attachment: Blank copy of form PTO/SB/83

cc: ALAN MEISSNER
N. 25311 THE LORDS LANE
CHATTAROY, WA 99003

UNITED STATES PATENT AND TRADEMARK OFFICE

UNITED STATES DEPARTMENT OF COMMERCE
United States Patent and Trademark Office
Address: COMMISSIONER FOR PATENTS
P.O. Box 1450
Alexandria, Virginia 22313-1450
www.uspto.gov

FREDERICK W. GIBB, III
Gibb Intellectual Property Law Firm, LLC
844 West Street
SUITE 100
ANNAPOLIS, MD 21401

Mail Date: 04/20/2010

Applicant	: Lucian Popa	: DECISION ON REQUEST FOR
Patent Number	: 7596559	: RECALCULATION of PATENT
Issue Date	: 09/29/2009	: TERM ADJUSTMENT IN VIEW
Appliction No	: 10/975,213	: OF WYETH AND NOTICE OF INTENT TO
Filed	: 10/28/2004	: ISSUE CERTIFICATE OF CORRECTION
		:

The Request for Recalculation is **GRANTED** to the extent indicated.

The patent term adjustment has been determined to be **449** days. The USPTO will *sua sponte* issue a certificate of correction reflecting the amount of PTA days determined by the recalculation.

Prior to the issuance of the certificate of correction, the USPTO will afford patentee an opportunity to be heard and request reconsideration. Accordingly, patentee has **one month or thirty (30) days**, whichever is longer, to file a request for reconsideration of this patent term adjustment calculation. See 35 U.S.C. 154(b)(3)(B)(ii) and 37 CFR 1.322(a)(4). No extensions of time will be granted under 37 CFR 1.136.

Patentee should use document code PET.OP if electronically filing a request for reconsideration of this patent term adjustment calculation. The patentee must also include the information required by 37 CFR 1.705(b)(2) and the fee required by 37 CFR 1.18(e). If patentee does not file a timely request for reconsideration of this patent term adjustment calculation including the information required by 37 CFR 1.705(b)(2) and the fee required by 37 CFR 1.18(e), the USPTO will issue a certificate of correction reflecting the PTA determination noted above.

Patentee should be aware that in order to preserve the right to review in the United States District Court for the District of Columbia of the USPTO patent term adjustment determination, patentee must ensure that he or she also take the steps required under 35 U.S.C. 154(b)(4)(A) in a timely manner. Nothing in the request for recalculation should be construed as providing an alternative time frame for commencing a civil action under 35 U.S.C. 154(b)(4)(A).

Any questions concerning this decision should be directed to the Office of Patent Legal Administration at 571-272-7702.

UNITED STATES PATENT AND TRADEMARK OFFICE

Commissioner for Patents
United States Patent and Trademark Office
P.O. Box 1450
Alexandria, VA 22313-1450
www.uspto.gov

WOOD, HERRON & EVANS, LLP
(NORDSON)
2700 CAREW TOWER
441 VINE STREET
CINCINNATI OH 45202

COPY MAILED

FEB 1 1 2008

OFFICE OF PETITIONS

In re Application of	:	
John M. Riney	:	
Application No. 10/975,227	:	DECISION GRANTING PETITION
Filed: October 28, 2004	:	UNDER 37 CFR 1.313(c)(2)
Attorney Docket No. NOR-1204	:	

This is a decision on the petition under 37 CFR 1.313(c)(2), filed February 8, 2008 to withdraw the above-identified application from issue after payment of the issue fee.

The petition is **GRANTED**.

The above-identified application is withdrawn from issue for consideration of a submission under 37 CFR 1.114 (request for continued examination). *See* 37 CFR 1.313(c)(2).

Petitioner is advised that the issue fee paid on December 7, 2007 cannot be refunded. If, however, this application is again allowed, petitioner may request that it be applied towards the issue fee required by the new Notice of Allowance.[1]

Telephone inquiries should be directed to the undersigned at (571) 272-3208.

This application is being referred to Technology Center AU 3754 for processing of the request for continued examination under 37 CFR 1.114 and for consideration of the concurrently filed IDS.

Karen Creasy
Petitions Examiner
Office of Petitions

---

[1] *The request to apply the issue fee to the new Notice may be satisfied by completing and returning the new Part B – Fee(s) Transmittal Form (along with any balance due at the time of submission). Petitioner is advised that the Issue Fee Transmittal Form* ***must*** *be completed and timely submitted to avoid abandonment of the application.*

UNITED STATES PATENT AND TRADEMARK OFFICE

UNITED STATES DEPARTMENT OF COMMERCE
United States Patent and Trademark Office
Address: COMMISSIONER FOR PATENTS
P.O. Box 1450
Alexandria, Virginia 22313-1450
www.uspto.gov

NORDSON CORPORATION
28601 CLEMENS ROAD
WESTLAKE, OH 44145-1148

Mail Date: 04/21/2010

Applicant	: John M. Riney	: DECISION ON REQUEST FOR
Patent Number	: 7617955	: RECALCULATION of PATENT
Issue Date	: 11/17/2009	: TERM ADJUSTMENT IN VIEW
Appliction No	: 10/975,229	: OF WYETH AND NOTICE OF INTENT TO
Filed	: 10/28/2004	: ISSUE CERTIFICATE OF CORRECTION
		:

The Request for Recalculation is **GRANTED** to the extent indicated.

The patent term adjustment has been determined to be **891** days. The USPTO will *sua sponte* issue a certificate of correction reflecting the amount of PTA days determined by the recalculation.

Prior to the issuance of the certificate of correction, the USPTO will afford patentee an opportunity to be heard and request reconsideration. Accordingly, patentee has **one month or thirty (30) days**, whichever is longer, to file a request for reconsideration of this patent term adjustment calculation. See 35 U.S.C. 154(b)(3)(B)(ii) and 37 CFR 1.322(a)(4). No extensions of time will be granted under 37 CFR 1.136.

Patentee should use document code PET.OP if electronically filing a request for reconsideration of this patent term adjustment calculation. The patentee must also include the information required by 37 CFR 1.705(b)(2) and the fee required by 37 CFR 1.18(e). If patentee does not file a timely request for reconsideration of this patent term adjustment calculation including the information required by 37 CFR 1.705(b)(2) and the fee required by 37 CFR 1.18(e), the USPTO will issue a certificate of correction reflecting the PTA determination noted above.

Patentee should be aware that in order to preserve the right to review in the United States District Court for the District of Columbia of the USPTO patent term adjustment determination, patentee must ensure that he or she also take the steps required under 35 U.S.C. 154(b)(4)(A) in a timely manner. Nothing in the request for recalculation should be construed as providing an alternative time frame for commencing a civil action under 35 U.S.C. 154(b)(4)(A).

Any questions concerning this decision should be directed to the Office of Patent Legal Administration at 571-272-7702.

UNITED STATES PATENT AND TRADEMARK OFFICE

Commissioner for Patents
United States Patent and Trademark Office
P.O. Box 1450
Alexandria, VA 22313-1450
www.uspto.gov

VOLPE AND KOENIG, P.C.
UNITED PLAZA, SUITE 1600
30 SOUTH 17TH STREET
PHILADELPHIA, PA 19103

COPY MAILED

AUG 17 2009

OFFICE OF PETITIONS

In re Application of	:	
Valentino CAMPAGNOLO	:	
Application No. 10/975,236	:	ON PETITION
Filed: October 28, 2004	:	
Attorney Docket No. CAM3-PT019.1	:	

This is a decision on the petition under the unintentional provisions of 37 CFR 1.137(b), filed May 21, 2009, to revive the above-identified application.

The petition is **GRANTED**.

The application became abandoned for failure to timely file a reply within the meaning of 37 CFR 1.113 to the final Office action of August 21, 2008. The proposed reply required for consideration of a petition to revive must be a Notice of Appeal (and appeal fee required by 37 CFR 41.20(b)(2), an amendment that *prima facie* places the application in condition for allowance, a Request for Continued Examination and submission (37 CFR 1.114), or the filing of a continuing application under 37 CFR 1.53(b). See MPEP 711.03(c)(II)(A)(2). No extensions of time pursuant to the provisions of 37 CFR 1.136(a) were obtained. Accordingly, the date of abandonment of this application is November 22, 2008.

The petition satisfies the requirements of 37 CFR 1.137(b) in that petitioner has supplied (1) the reply in the form of a Request for Continued Examination (RCE) and fee of $810, and the submission required by 37 CFR 1.114; (2) the petition fee of $1620; and (3) a proper statement of unintentional delay.

Telephone inquiries concerning this decision should be directed to Diane Goodwyn at (571) 272-6735.

This application is being referred to Technology Center AU 3782 for processing of the RCE and for appropriate action by the Examiner in the normal course of business on the amendment submitted in accordance with 37 CFR 1.114.

Thurman K. Page
Petitions Examiner
Office of Petitions

DEC 0 5 2005
PATENT & TRADEMARK OFFICE

PATENT

IN THE UNITED STATES PATENT AND TRADEMARK OFFICE

Applicant:	Steven D. Leitch et al.	Examiner:	Steven L. Weinstein
Serial No.:	10/975,242	Group Art Unit:	1761
Filed:	October 28, 2004	Confirmation No.:	6368
Docket No.:	100P338US01		
Title:	METHOD OF COOKING A FROZEN TURKEY		

PETITION TO MAKE SPECIAL
UNDER 37 CFR 1.102(d)

MS: Petition
Commissioner for Patents
P.O. Box 1450
Alexandria, VA 22313-1450

Dear Sir:

Applicants respectfully request that the above-identified application be made special because of actual infringement under 37 CFR 1.102(d).

Accompanying this Petition are the required fee set forth in 37 CFR 1.17(h) and the Statement by the undersigned representative for the Applicants.

Please charge the petition fee under 37 CFR 1.17(h) to Deposit Account 50-0549.

Respectfully submitted,
STEVEN D. LEITCH ET AL.

12/06/2005 MGEBREM1 00000007 500549 10975242
01 FC:1464 130.00 DA

By: Robin A. Sannes

Robin A. Sannes
Reg. No.: 45,070
IPLM Group, P.A.
Post Office Box 18455
Minneapolis, MN 55418
Telephone: (612) 331-7419

PETITION GRANTED

William Krynski
Special Program Examiner
Technology Center 1700
DEC 2 2 2005

UNITED STATES PATENT AND TRADEMARK OFFICE

UNITED STATES DEPARTMENT OF COMMERCE
United States Patent and Trademark Office
Address: COMMISSIONER FOR PATENTS
P.O. Box 1450
Alexandria, Virginia 22313-1450
www.uspto.gov

MCKEE, VOORHEES & SEASE, P.L.C.
801 GRAND AVENUE
SUITE 3200
DES MOINES, IA 50309-2721

Mail Date: 04/20/2010

Applicant	: Vijay Kumar	: DECISION ON REQUEST FOR
Patent Number	: 7649089	: RECALCULATION of PATENT
Issue Date	: 01/19/2010	: TERM ADJUSTMENT IN VIEW
Appliction No	: 10/975,248	: OF WYETH AND NOTICE OF INTENT TO
Filed	: 10/28/2004	: ISSUE CERTIFICATE OF CORRECTION
		:

The Request for Recalculation is **GRANTED** to the extent indicated.

The patent term adjustment has been determined to be **1002** days. The USPTO will *sua sponte* issue a certificate of correction reflecting the amount of PTA days determined by the recalculation.

Prior to the issuance of the certificate of correction, the USPTO will afford patentee an opportunity to be heard and request reconsideration. Accordingly, patentee has **one month or thirty (30) days**, whichever is longer, to file a request for reconsideration of this patent term adjustment calculation. See 35 U.S.C. 154(b)(3)(B)(ii) and 37 CFR 1.322(a)(4). No extensions of time will be granted under 37 CFR 1.136.

Patentee should use document code PET.OP if electronically filing a request for reconsideration of this patent term adjustment calculation. The patentee must also include the information required by 37 CFR 1.705(b)(2) and the fee required by 37 CFR 1.18(e). If patentee does not file a timely request for reconsideration of this patent term adjustment calculation including the information required by 37 CFR 1.705(b)(2) and the fee required by 37 CFR 1.18(e), the USPTO will issue a certificate of correction reflecting the PTA determination noted above.

Patentee should be aware that in order to preserve the right to review in the United States District Court for the District of Columbia of the USPTO patent term adjustment determination, patentee must ensure that he or she also take the steps required under 35 U.S.C. 154(b)(4)(A) in a timely manner. Nothing in the request for recalculation should be construed as providing an alternative time frame for commencing a civil action under 35 U.S.C. 154(b)(4)(A).

Any questions concerning this decision should be directed to the Office of Patent Legal Administration at 571-272-7702.

UNITED STATES PATENT AND TRADEMARK OFFICE

Commissioner for Patents
United States Patent and Trademark Office
P.O. Box 1450
Alexandria, VA 22313-1450
www.uspto.gov

COPY MAILED

APR 15 2008

OFFICE OF PETITIONS

SEYFARTH SHAW LLP
131 S. DEARBORN ST., SUITE 2400
CHICAGO, IL 60603-5803

In re Application of	:	
Larry D. Hestand	:	
Application No. 10/975,250	:	DECISION ON PETITION
Filed: October 28, 2004	:	TO WITHDRAW
Attorney Docket No. 400100	:	FROM RECORD
	:	

This is a decision on the Request to Withdraw as attorney or agent of record under 37 C.F.R. § 1.36(b), filed October 18, 2007 and resubmitted February 4, 2008.

The request is **NOT APPROVED**.

A grantable request to withdraw as attorney/agent of record must be signed by every attorney/agent seeking to withdraw or contain a clear indication that one attorney is signing on behalf of another/others. A request to withdraw will not be approved unless at least 30 (thirty) days would remain between the date of approval and the later of the expiration date of a time to file a response or the expiration date of the maximum time period which can be extended under 37 C.F.R. § 1.136(a).

The Office cannot approve the request at this time since the reasons provided do not meet any of the conditions under the mandatory or permissive categories enumerated in 37 CFR 10.40. Section 10.40 of Title 37 of the Code of Federal Regulation states, "[a] practitioner shall not withdraw from employment in a proceeding before the Office without permission from the Office[.]" More specifically, 37 CFR 10.40 states, "[i]f paragraph (b) of this section is not applicable, a practitioner may not request permission to withdraw in matter pending before the Office unless such request or such withdrawal is" for one the permissive reasons listed in 37 CFR 10.40(c). The reasons set forth in the request, I have written to the applicant informing him of the issuance of an Office action mailed on June 18, 2007, does not meet any of the conditions set forth in 37 CFR 10.40.

All future communications from the Office will continue to be directed to the above-listed address until otherwise notified by applicant.

Telephone inquiries concerning this decision should be directed to undersigned at 571-272-1642.

April M. Wise
Petitions Examiner
Office of Petitions

cc: LARRY D. HESTAND
14291 HOOPER RANCH ROAD
WILLIS, TX 77378

UNITED STATES PATENT AND TRADEMARK OFFICE

Commissioner for Patents
United States Patent and Trademark Office
P.O. Box 1450
Alexandria, VA 22313-1450
www.uspto.gov

SEYFARTH SHAW LLP
131 S. DEARBORN ST.
SUITE 2400
CHICAGO IL 60603-5803

COPY MAILED

MAY 1 4 2008

In re Application of	:	
Larry D. Hestand	:	
Application No. 10/975,250	:	DECISION ON PETITION
Filed: October 28, 2004	:	TO WITHDRAW
Attorney Docket No. 400100	:	FROM RECORD
	:	

This is a decision on the Request to Withdraw as attorney or agent of record under 37 C.F.R. § 1.36(b), filed May 7, 2008.

The request is **APPROVED**.

A grantable request to withdraw as attorney/agent of record must be signed by every attorney/agent seeking to withdraw or contain a clear indication that one attorney is signing on behalf of another/others. A request to withdraw will not be approved unless at least 30 (thirty) days would remain between the date of approval and the later of the expiration date of a time to file a response or the expiration date of the maximum time period which can be extended under 37 C.F.R. § 1.136(a).

The request was signed by Harold V. Stotland on behalf of all attorneys of record who are associated with this application.

All attorneys/agents associated with this application have been withdrawn.

Applicant is reminded that there is no attorney of record at this time.

The request to change the correspondence of record is not acceptable as the requested correspondence address is not that of: (1) the first named signing inventor; or (2) an intervening assignee of the entire interest under 37 C.F.R 3.71. All future communications from the Office will be directed to the first named signing inventor at the first copied address below until otherwise properly notified by the applicant.

There is an outstanding Office action mailed June 18, 2007 that requires a reply from applicant.

Telephone inquiries concerning this decision should be directed to undersigned at 571-272-1642.

April M. Wise
Petitions Examiner
Office of Petitions

cc: LARRY D. HESTAND
14291 HOOPER RANCH ROAD
WILLIS, TX 77378

UNITED STATES PATENT AND TRADEMARK OFFICE

UNITED STATES DEPARTMENT OF COMMERCE
United States Patent and Trademark Office
Address: COMMISSIONER FOR PATENTS
P.O. Box 1450
Alexandria, Virginia 22313-1450
www.uspto.gov

APPLICATION NUMBER	FILING OR 371(C) DATE	FIRST NAMED APPLICANT	ATTY. DOCKET NO./TITLE
10/975,250	10/28/2004	Larry D. Hestand	400100

CONFIRMATION NO. 6365

POWER OF ATTORNEY NOTICE

27717
SEYFARTH SHAW LLP
131 S. DEARBORN ST., SUITE 2400
CHICAGO, IL 60603-5803

OC000000029905402

Date Mailed: 05/12/2008

NOTICE REGARDING CHANGE OF POWER OF ATTORNEY

This is in response to the Power of Attorney filed 05/07/2008.

- The withdrawal as attorney in this application has been accepted. Future correspondence will be mailed to the new address of record. 37 CFR 1.33.

/amwise/

Office of Data Management, Application Assistance Unit (571) 272-4000, or (571) 272-4200, or 1-888-786-0101

UNITED STATES PATENT AND TRADEMARK OFFICE

Commissioner for Patents
United States Patent and Trademark Office
P.O. Box 1450
Alexandria, VA 22313-1450
www.uspto.gov

MICHAEL K. CARRIER
EASTMAN CHEMICAL COMPANY
P.O. BOX 511
KINGSPORT, TN 37662

COPY MAILED
OCT 14 2008
OFFICE OF PETITIONS

In re Application of	:	
Thauming Kuo et al	:	
Application No. 10/975,251	:	ON PETITION
Filed: October 28, 2004	:	
Attorney Docket No. 71323 US07	:	

This is a decision on the petition under the unintentional provisions of 37 CFR 1.137(b), filed July 17, 2008, to revive the above-identified application.

The petition is **GRANTED**.

The petition satisfies the requirements of 37 CFR 1.137(b) in that petitioner has supplied (1) the reply in the form of a continuing application under 37 CFR 1.53(b); (2) the petition fee of $1540; and (3) a proper statement of unintentional delay.

This application is being revived solely for purposes of continuity. As continuity has been established by this decision, the application is again abandoned in favor of continuing application No. 12/175,090.

An extension of time under 37 CFR 1.136 must be filed prior to the expiration of the maximum extendable period for reply. See In re Application of S., 8 USPQ2d 1630, 1631 (Comm'r Pats. 1988). Accordingly, since the $1050 extension of time submitted with the petition on July 17, 2008 was subsequent to the maximum extendable period for reply, this fee is unnecessary and will be credit to petitioner's deposit account.

Telephone inquiries concerning this decision should be directed to Irvin Dingle at (571) 272-3210.

Irvin Dingle
Petitions Examiner
Office of Petitions

UNITED STATES PATENT AND TRADEMARK OFFICE

Commissioner for Patents
United States Patent and Trademark Office
P.O. Box 1450
Alexandria, VA 22313-1450
www.uspto.gov

COPY MAILED

OCT 12 2005

OFFICE OF PETITIONS

PHILIP S. JOHNSON
JOHNSON & JOHNSON
ONE JOHNSON & JOHNSON PLAZA
NEW BRUNSWICK, NJ 08933-7003

In re Application of :
Robert J. Shartle et al :
Application No. 10/975,258 : ON PETITION
Filed: October 28, 2004 :
Attorney Docket No. LFS-093USACON

This is a decision on the petition, filed October 3, 2005 under 37 CFR 1.313(c)(2) to withdraw the above-identified application from issue after payment of the issue fee.

The petition is **GRANTED.**

The above-identified application is withdrawn from issue for consideration of a submission under 37 CFR 1.114 (request for continued examination). See 37 CFR 1.313(c)(2).

Petitioner is advised that the issue fee paid on July 12, 2005 in the above-identified application cannot be refunded. If, however, the above-identified application is again allowed, petitioner may request that it be applied towards the issue fee required by the new Notice of Allowance.[1]

The file does not indicate a change of address has been submitted, although the address given on the petition differs from the address of record. If appropriate, a change of address should be filed in accordance with MPEP 601.03. A courtesy copy of this decision is being mailed to the address given on the petition; however, the Office will mail all future correspondence solely to the address of record.

Telephone inquiries should be directed to Irvin Dingle at (571) 272-3210.

This matter is being referred to Technology Center AU 3736 for processing of the request for continued examination under 37 CFR 1.114 and for consideration of the concurrently filed Information Disclosure Statement.

Irvin Dingle
Petitions Examiner
Office of Petitions

cc:
Johnson & Johnson
International Patent Law Division
Attention: Philip Johnson
P.O. Box 1222
New Brunswick, NJ 08903

---

[1] The request to apply the issue fee to the new Notice may be satisfied by completing and returning the new Issue Fee Transmittal Form PTOL-85(b), which includes the following language thereon: Commissioner for Patents is requested to apply the Issue Fee and Publication Fee (if any) or re-apply any previously paid issue fee to the application identified above. Petitioner is advised that, whether a fee is indicated as being due or not, the Issue Fee Transmittal Form **must** be completed and timely submitted to avoid abandonment. Note the language in bold text on the first page of the Notice of Allowance and Fee(s) Due (PTOL-85).

UNITED STATES PATENT AND TRADEMARK OFFICE

Commissioner for Patents
United States Patent and Trademark Office
P.O. Box 1450
Alexandria, VA 22313-1450
www.uspto.gov

Stephen M. Patton
7881 Grove Court East
Germantown, TN 38130

COPY MAILED

AUG 0 1 2006

OFFICE OF PETITIONS

In re Application of	:	
Sivakumar Batthala	:	
Application No. 10/975,265	:	DECISION ON PETITION
Filed: October 28, 2004	:	TO WITHDRAW
Attorney Docket No. 17564	:	FROM RECORD
	:	

This is a decision on the Request to Withdraw as attorney or agent of record under 37 C.F.R. § 1.36(b), filed January 17, 2006.

The request is **NOT APPROVED**.

A grantable request to withdraw as attorney/agent of record must be signed by every attorney/agent seeking to withdraw or contain a clear indication that one attorney is signing on behalf of another/others. A request to withdraw will not be approved unless at least 30 (thirty) days would remain between the date of approval and the later of the expiration date of a time to file a response or the expiration date of the maximum time period which can be extended under 37 C.F.R. § 1.136(a).

The Office cannot approve the request at this time since the reasons provided do not meet any of the conditions under the mandatory or permissive categories enumerated in 37 CFR 10.40. Section 10.40 of Title 37 of the Code of Federal Regulation states, "[a] practitioner shall not withdraw from employment in a proceeding before the Office without permission from the Office[.]" More specifically, 37 CFR 10.40 states, "[i]f paragraph (b) of this section is not applicable, a practitioner may not request permission to withdraw in matter pending before the Office unless such request or such withdrawal is" for one the permissive reasons listed in 37 CFR 10.40(c). The reasons set forth in the request, **I no longer legally represent the assignee**, do not meet any the conditions set forth in 37 CFR 10.40.

All future communications from the Office will continue to be directed to the above-listed address until otherwise notified by applicant.

Telephone inquiries concerning this decision should be directed to Terri Williams at 571-272-2991.

David Bucci
Petitions Examiner
Office of Petitions

UNITED STATES PATENT AND TRADEMARK OFFICE

UNITED STATES DEPARTMENT OF COMMERCE
United States Patent and Trademark Office
Address: COMMISSIONER FOR PATENTS
P.O. Box 1450
Alexandria, Virginia 22313-1450
www.uspto.gov

SPRINT
6391 SPRINT PARKWAY
KSOPHT0101-Z2100
OVERLAND PARK, KS 66251-2100

Mail Date: 04/21/2010

Applicant	: David K. Fultz	: DECISION ON REQUEST FOR
Patent Number	: 7640337	: RECALCULATION of PATENT
Issue Date	: 12/29/2009	: TERM ADJUSTMENT IN VIEW
Appliction No	: 10/975,276	: OF WYETH AND NOTICE OF INTENT TO
Filed	: 10/28/2004	: ISSUE CERTIFICATE OF CORRECTION
		:

The Request for Recalculation is **GRANTED** to the extent indicated.

The patent term adjustment has been determined to be **1077** days. The USPTO will *sua sponte* issue a certificate of correction reflecting the amount of PTA days determined by the recalculation.

Prior to the issuance of the certificate of correction, the USPTO will afford patentee an opportunity to be heard and request reconsideration. Accordingly, patentee has **one month or thirty (30) days**, whichever is longer, to file a request for reconsideration of this patent term adjustment calculation. See 35 U.S.C. 154(b)(3)(B)(ii) and 37 CFR 1.322(a)(4). No extensions of time will be granted under 37 CFR 1.136.

Patentee should use document code PET.OP if electronically filing a request for reconsideration of this patent term adjustment calculation. The patentee must also include the information required by 37 CFR 1.705(b)(2) and the fee required by 37 CFR 1.18(e). If patentee does not file a timely request for reconsideration of this patent term adjustment calculation including the information required by 37 CFR 1.705(b)(2) and the fee required by 37 CFR 1.18(e), the USPTO will issue a certificate of correction reflecting the PTA determination noted above.

Patentee should be aware that in order to preserve the right to review in the United States District Court for the District of Columbia of the USPTO patent term adjustment determination, patentee must ensure that he or she also take the steps required under 35 U.S.C. 154(b)(4)(A) in a timely manner. Nothing in the request for recalculation should be construed as providing an alternative time frame for commencing a civil action under 35 U.S.C. 154(b)(4)(A).

Any questions concerning this decision should be directed to the Office of Patent Legal Administration at 571-272-7702.

UNITED STATES PATENT AND TRADEMARK OFFICE

FEB 23 2005

COMMISSIONER FOR PATENTS
UNITED STATES PATENT AND TRADEMARK OFFICE
P.O. BOX 1450
ALEXANDRIA, VA 22313-1450
www.uspto.gov

MAILED

FEB 23 2005

OFFICE OF THE DIRECTOR
TC 3600

ECKERT SEAMANS CHERIN & MELLOTT
600 Grant Street
44th Floor
Pittsburgh, PA 15219

In re application of
Russell G. Ross et al
Application No. 10/975,277
Filed: October 28, 2004
For: SYSTEM AND METHOD OF PROVIDING DISCOUNTS ON THE PURCHASE OF GASOLINE

DECISION ON PETITION TO MAKE SPECIAL (INFRINGEMENT)

This is a decision on the petition under 37 C.F.R. § 1.102(d) filed November 15, 2004 to make the above-identified application special.

The petition requests that the above-identified application be made special under the procedure set forth in M.P.E.P. § 708.02, item II: Infringement.

MPEP 708.02 states that a Petition to Make Special based on Infringement must have the following: (1) the appropriate petition fee under 37 CFR 1.17(i); (2) a statement by the assignee, applicant, or attorney alleging: (A) that there is an infringing device or product actually on the market or method in use; (B) that a rigid comparison of the alleged infringing device, product or method with the claims of the application has been made, and that, in his or her opinion, some of the claims are unquestionably infringed; and (C) that he or she has made a careful and thorough search of the prior art, or has good knowledge of the prior art, and has sent a copy of the references deemed most closely related to the subject matter encompassed by the claims.

The petition filed November 15, 2004, meets all of the requirements above and is **GRANTED**.

The examiner is directed (1) to make an interference search for possible interfering applications; (2) to promptly examine this application out of turn; and (3) if any interfering application is discovered, to examine such application simultaneously and state in the first official letter of such application that it is being taken out of turn because of a possible interference.

Petitioner is advised that this application will continue to be special, throughout its entire prosecution and pendency, including interference and appeal, if any, only if petitioner makes a prompt *bona fide* effort, in response to each Office action, to place the application in condition for allowance, even if it is necessary to conduct an interview with the examiner to accomplish this purpose.

Steven N. Meyers
Special Programs Examiner
Technology Center 3600
(703) 308-3868

SNM/jwk: 1/26/05

UNITED STATES PATENT AND TRADEMARK OFFICE

Commissioner for Patents
United States Patent and Trademark Office
P.O. Box 1450
Alexandria, VA 22313-1450
www.uspto.gov
DIW Sep-07

BAKER BOTTS L.L.P.
30 ROCKEFELLER PLAZA
44TH FLOOR
NEW YORK NY 10112-4498

COPY MAILED

OCT 01 2007

OFFICE OF PETITIONS

In re Application of	:	
Fisher et al.	:	DECISION ON PETITION
Application Number: 10/975280	:	TO WITHDRAW HOLDING OF
Filing Date: 10/27/2004	:	ABANDONMENT
Attorney Docket Number: 35570-PCT-USA-A	:	

This is a decision on the petition to withdraw the holding of abandonment under 37 CFR 1.181(a), filed on 7 August, 2007.

The petition is **dismissed**.

The application was held abandoned for failure to timely reply to the final Office action mailed on 3 October, 2006, which set a three (3) month shortened statutory period for reply. The filing of the present petition precedes the mailing of Notice of Abandonment.

Petitioners assert that a response was in fact timely filed in the form of an amendment after final rejection. In support of the petition, petitioners submitted a copy of a date-stamped post card receipt acknowledging receipt of, *inter alia*, an amendment, a request for extension (of time), and an IDS in the United States Patent and Trademark Office (Office) on 3 April, 2007.

The petition lacks the required reply. The only proper reply to a final Office action is a Notice of Appeal and fee, Request for Continuing Examination and submission under 37 CFR 1.114, a continuing application, or an amendment placing the application

in *prima facie* condition for allowance. The examiner has determined that the amendment which petitioners assert was filed on 3 April, 2007, does not place the case in *prima facie* condition for allowance.

It is clear from 37 CFR 1.116 that abandonment of an application is risked when an amendment after a final Office action is filed. The rule clearly indicates that the mere filing of an amendment does not relieve petitioners of the duty of taking appropriate action to save the application from abandonment. Therefore, whether petition received an Advisory Action or not, prior to the expiration of the six month statutory period, the only right petitioner was entitled to was that of appealing the final rejection, filing a continuing application, or requesting continued examination by filing a submission and the required fee. This application became abandoned for failure on the part of petitioner to file an appeal, a continuing application, or a request for continued examination accompanied by a submission.

An Advisory Action Before the Filing of An Appeal Brief is enclosed for petitioners' information.

Petitioners are encouraged to consider the filing of a petition to revive, accompanied by a proper reply.

Any request for reconsideration must be filed within **TWO MONTHS** of the date of this decision. **This period may not be extended.**[1] Further correspondence with respect to this matter should be addressed as follows:

By mail: Mail Stop Petition
Commissioner for Patents
P.O. Box 1450
Alexandria, VA 22313-1450

By FAX: (571) 273-8300
Attn: Office of Petitions

By hand: Customer Service Window
Mail Stop Petition
Randolph Building
401 Dulany Street
Alexandria, VA 22314

[1] 37 CFR 1.181(f).

Telephone inquiries concerning this matter may be directed to the undersigned at (571)272-3231.

Douglas I. Wood
Senior Petitions Attorney
Office of Petitions

Encl: Advisory Action Before the Filing of an Appeal Brief

Advisory Action Before the Filing of an Appeal Brief	Application No.	Applicant(s)	
	10/975,280	FISHER ET AL.	
	Examiner	Art Unit	
	Zachariah Lucas	1648	

--The MAILING DATE of this communication appears on the cover sheet with the correspondence address --

THE REPLY FILED 07 August 2007 FAILS TO PLACE THIS APPLICATION IN CONDITION FOR ALLOWANCE.

1. ☒ The reply was filed after a final rejection, but prior to or on the same day as filing a Notice of Appeal. To avoid abandonment of this application, applicant must timely file one of the following replies: (1) an amendment, affidavit, or other evidence, which places the application in condition for allowance; (2) a Notice of Appeal (with appeal fee) in compliance with 37 CFR 41.31; or (3) a Request for Continued Examination (RCE) in compliance with 37 CFR 1.114. The reply must be filed within one of the following time periods:
   a) ☒ The period for reply expires 6 months from the mailing date of the final rejection.
   b) ☐ The period for reply expires on: (1) the mailing date of this Advisory Action, or (2) the date set forth in the final rejection, whichever is later. In no event, however, will the statutory period for reply expire later than SIX MONTHS from the mailing date of the final rejection.

   Examiner Note: If box 1 is checked, check either box (a) or (b). ONLY CHECK BOX (b) WHEN THE FIRST REPLY WAS FILED WITHIN TWO MONTHS OF THE FINAL REJECTION. See MPEP 706.07(f).

Extensions of time may be obtained under 37 CFR 1.136(a). The date on which the petition under 37 CFR 1.136(a) and the appropriate extension fee have been filed is the date for purposes of determining the period of extension and the corresponding amount of the fee. The appropriate extension fee under 37 CFR 1.17(a) is calculated from: (1) the expiration date of the shortened statutory period for reply originally set in the final Office action; or (2) as set forth in (b) above, if checked. Any reply received by the Office later than three months after the mailing date of the final rejection, even if timely filed, may reduce any earned patent term adjustment. See 37 CFR 1.704(b).

NOTICE OF APPEAL

2. ☐ The Notice of Appeal was filed on _____. A brief in compliance with 37 CFR 41.37 must be filed within two months of the date of filing the Notice of Appeal (37 CFR 41.37(a)), or any extension thereof (37 CFR 41.37(e)), to avoid dismissal of the appeal. Since a Notice of Appeal has been filed, any reply must be filed within the time period set forth in 37 CFR 41.37(a).

AMENDMENTS

3. ☒ The proposed amendment(s) filed after a final rejection, but prior to the date of filing a brief, will not be entered because
   (a) ☒ They raise new issues that would require further consideration and/or search (see NOTE below);
   (b) ☒ They raise the issue of new matter (see NOTE below);
   (c) ☐ They are not deemed to place the application in better form for appeal by materially reducing or simplifying the issues for appeal; and/or
   (d) ☐ They present additional claims without canceling a corresponding number of finally rejected claims.

   NOTE: *See Continuation Sheet*. (See 37 CFR 1.116 and 41.33(a)).
4. ☐ The amendments are not in compliance with 37 CFR 1.121. See attached Notice of Non-Compliant Amendment (PTOL-324).
5. ☐ Applicant's reply has overcome the following rejection(s): _____.
6. ☐ Newly proposed or amended claim(s) _____ would be allowable if submitted in a separate, timely filed amendment canceling the non-allowable claim(s).
7. ☒ For purposes of appeal, the proposed amendment(s): a) ☒ will not be entered, or b) ☐ will be entered and an explanation of how the new or amended claims would be rejected is provided below or appended.
   The status of the claim(s) is (or will be) as follows:
   Claim(s) allowed: *1,7,10 and 55*.
   Claim(s) objected to: *58,65 and 67*.
   Claim(s) rejected: *4,13,16,64 and 66*.
   Claim(s) withdrawn from consideration: _____.

AFFIDAVIT OR OTHER EVIDENCE

8. ☐ The affidavit or other evidence filed after a final action, but before or on the date of filing a Notice of Appeal will not be entered because applicant failed to provide a showing of good and sufficient reasons why the affidavit or other evidence is necessary and was not earlier presented. See 37 CFR 1.116(e).
9. ☐ The affidavit or other evidence filed after the date of filing a Notice of Appeal, but prior to the date of filing a brief, will not be entered because the affidavit or other evidence failed to overcome all rejections under appeal and/or appellant fails to provide a showing a good and sufficient reasons why it is necessary and was not earlier presented. See 37 CFR 41.33(d)(1).
10. ☒ The affidavit or other evidence is entered. An explanation of the status of the claims after entry is below or attached.

REQUEST FOR RECONSIDERATION/OTHER

11. ☒ The request for reconsideration has been considered but does NOT place the application in condition for allowance because: See Continuation Sheet.
12. ☒ Note the attached Information Disclosure Statement(s). (PTO/SB/08) Paper No(s). 8/7/07
13. ☒ Other: See Continuation Sheet.

Continuation of 3. NOTE: With respect to the assertion that claims 1 and 4 have been amended to read on the coding region of SEQ ID NO: 1, this assertion is not agreed with. Reference to Figure 14 as indicated by the Applicant shows that the coding region actually begins at position 220, not 221. It is therefore not clear where support may be found for the added subject matter. In any case, this is a new limitation which has not been previously considered. With respect to the amendment to claim 4 (reference to 90 percent identity), this is a new limitation which has not been previously considered.

Continuation of 11. does NOT place the application in condition for allowance because: The Applicant has presented a declaration showing possession of the nucleotide of SEQ ID NO: 1 prior to august 8, 2001, the submission date of GenBank Accession AF100421. However, the declaration is not found sufficent to demonstrate posession of the full scope of the claimed subject matter, nucleotides comprising any sequence that would hybridize to SEQ ID NO: 1 and encode a polypeptide with the desired functionality. Because the Applicant has not shown possession of more than the sequence of SEQ ID NO: 1 prior to the earliest date of the reference (i.e. has not shown posession of the entire claimed genus), and as the reference teaches a member of the claimed genus other than that in Applicant's possession, the argument is not found persuasive, and the rejection is maintained.

Continuation of 13. Other: It is noted that the IDS filed with the papers of 8/7/07 has not been considered as the IDS was filed after final, but was not accompanied by the statement required under 37 CFR 1.97(d).

UNITED STATES PATENT AND TRADEMARK OFFICE

COMMISSIONER FOR PATENTS
UNITED STATES PATENT AND TRADEMARK OFFICE
P.O. BOX 1450
ALEXANDRIA, VA 22313-1450
www.uspto.gov
DIW Nov-07

BAKER BOTTS L.L.P.
30 ROCKEFELLER PLAZA
44TH FLOOR
NEW YORK NY 10112-4498

COPY MAILED

NOV 15 2007

OFFICE OF PETITIONS

In re Application of	:	
Fisher et al.	:	
Application Number: 10/975280	:	DECISION ON PETITION
Filing Date: 10/27/2004	:	
Attorney Docket Number: 35570-PCT-USA-A	:	

This is a decision on the petition filed on October 5, 2007, under 37 CFR 1.137(b),[1] to revive the above-identified application.

The petition is **GRANTED**.

The application became abandoned on January 4, 2007, for failure to timely file a proper reply to the final Office action mailed on October 3, 2006, which set a three (3) month shortened statutory period for reply. The filing of the present petition

---

[1] Effective December 1, 1997, the provisions of 37 CFR 1.137(b) now provide that where the delay in reply was unintentional, a petition may be filed to revive an abandoned application or a lapsed patent pursuant to 37 CFR 1.137(b). A grantable petition filed under the provisions of 37 CFR 1.137(b) must be accompanied by:

(1) the required reply, unless previously filed. In a nonprovisional application abandoned for failure to prosecute, the required reply may be met by the filing of a continuing application. In a nonprovisional utility or plant application filed on or after June 8, 1995, and abandoned for failure to prosecute, the required reply may also be met by the filing of a request for continuing examination in compliance with § 1.114. In an application or patent, abandoned or lapsed for failure to pay the issue fee or any portion thereof, the required reply must be the payment of the issue fee or any outstanding balance thereof.

(2) the petition fee as set forth in 37 CFR 1.17(m);

(3) a statement that the entire delay in filing the required reply from the due date for the reply until the filing of a grantable petition pursuant to 37 CFR 1.137(b) was unintentional. The Commissioner may required additional information where there is a question whether the delay was unintentional; and

(4) any terminal disclaimer (and fee as set forth in 37 CFR 1.20(d)) required pursuant to 37 CFR 1.137(c)).

precedes the mailing of Notice of Abandonment. On August 7, 2007, a petition to withdraw the holding of abandonment was filed. On October 1, 2007, the petition was dismissed.

Petitioners have filed a Request for Continued Examination (RCE) and have filed an amendment as the submission required under 37 CFR 1.114.

The statement contained in the instant petition does not set forth that the entire delay from the due date of the required reply to the date of the filing of a grantable petition was unintentional as required by 37 CFR 1.137(b)(3). However, the statement contained in the instant petition is being so construed. Petitioner **must** notify the Office if this is not a correct interpretation.

This application is being forwarded to Technology Center 1648 for further processing.

Telephone inquiries concerning this matter may be directed to the undersigned at (571)272-3231.

Douglas I. Wood
Senior Petitions Attorney
Office of Petitions

UNITED STATES PATENT AND TRADEMARK OFFICE

COMMISSIONER FOR PATENTS
UNITED STATES PATENT AND TRADEMARK OFFICE
P.O. BOX 1450
ALEXANDRIA, VA 22313-1450
www.uspto.gov

WOODARD, EMHARDT, MORIARTY, MCNETT & HENRY LLP
BANK ONE CENTER/TOWER
111 MONUMENT CIRCLE, SUITE 3700
INDIANAPOLIS IN 46204-5137

MAIL

JAN 28 2005

DIRECTOR OFFICE
TECHNOLOGY CENTER 2600

In re Application of
Doug Strachota
Application No. 10/975,307
Filed: October 28, 2004
For: **SYSTEM AND METHOD FOR CONVERTING A CD COLLECTION TO A DIFFERENT MEDIA OR FORMAT**

DECISION ON PETITION
TO MAKE SPECIAL

This is a decision on the petition filed October 28, 2004. Applicant's petition includes the requirements from two different sections for advancement of prosecution. The first is section II Infringement and the second section VIII for Accelerated examination. Therefore, the requirements for both sections will be discussed below.

A grantable petition under 37 CFR §1.102(d) and MPEP §708.02, section II (Infringement), must be accompanied by the required fee and a statement alleging:
(1) that there is an infringing device or product actually on the market or method in use;
(2) that a rigid comparison of the alleged infringing device, product, or method with the claims of the application has been made, and that, in his or her opinion, some of the claims are unquestionably infringed; and
(3) that he or she has made or caused to be made a careful and thorough search of the prior art or has a good knowledge of the pertinent prior art. Further, Applicant must provide a copy of each of the references deemed most closely related to the subject matter encompassed by the claims if the references are not already of record.

The petitioner meets all the above-listed requirements. Accordingly, the petition pursuant to 37 CFR §1.102(d) and MPEP §708.02, section II (Infringement), is **GRANTED**.

The petition under Manual of Patent Examination Procedure §708.02, VIII, must:
(1) be filed prior to receiving any examination by the examiner,
(2) be accompanied by the required fee- $130,
(3) the claims should be directed to a single invention (if it is determined that the claims pertain to more than one invention, then applicant will have to make an election without traverse or forfeit accelerated examination status),
(4) state that a pre-examination search was made, and fully discuss the search method employed, such as classes and subclasses searched, publications, Chemical abstracts, patents, etc. A search made by a foreign patent office satisfies this requirement,

(5) be accompanied by a copy of each of the references most closely related to the subject matter encompassed by the claims if said references are not already of record,
(6) fully discuss the references, pointing out with the particularity required by 37 C.F.R. §1.111 (b) and (c), how the claimed subject matter is patentable over the references.

The petitioner fails to provide a detailed discussion pointing out with the particularity required, how the claimed subject matter is patentable over the references. Therefore, petitioner failed to meet all the above-listed requirements.

However, given that petitioner satisfied the requirements of section II (Infringement), petitioner's separate petition under section VIII (Accelerated examination) is **Dismissed as Moot**.

The application will retain its special status throughout its entire prosecution, including any appeal to the Board of Patent Appeals and Interferences, subject only to diligent prosecution by the applicant. The application file is being forwarded to the examiner for appropriate action in due course.

Dwayne Bost
Special Program Examiner
Technology Center 2600
Communications

UNITED STATES PATENT AND TRADEMARK OFFICE

Commissioner for Patents
United States Patent and Trademark Office
P.O. Box 1450
Alexandria, VA 22313-1450
www.uspto.gov

LERNER GREENBERG STEMER LLP
P O BOX 2480
HOLLYWOOD FL 33022-2480

COPY MAILED

SEP 3 0 2008

OFFICE OF PETITIONS

In re Application of :
Bunte :
Application No. 10/975,318 :
Filed: October 28, 2004 :
Attorney Docket No. 2598/207-150 CIP :

ON PETITION

This decision is mailed in response to (1) the petition under 37 CFR 1.181, filed August 25, 2008, requesting withdrawal of the holding of abandonment in the above-identified application and (2) the petition to revive the above-identified application under the unavoidable delay provisions of 37 CFR 1.137(a), filed September 3, 2008.

The petition under 37 CFR 1.181 is **DISMISSED**.

The petition under 37 CFR 1.137(a) is **GRANTED**.

This application became abandoned for failure to timely respond to the Notice of Allowability, mailed February 27, 2008, which set a three (3) month period for reply. Accordingly, this application became abandoned on May 28, 2008. A Notice of Abandonment was mailed on June 24, 2008.

Petitioner asserts the application did not become abandoned because there were no objections to the drawings of record as of the mail date of the Notice of Allowability. Therefore, petitioner argues that the February 27, 2008 Notice of Allowability was mailed in error.

Petitioner is reminded that the Notice of Allowability set a three month non-extendable period for reply. The Notice of Allowability was never withdrawn. Failure to timely reply resulted in the abandonment of the application. Even if an applicant believes an Office action is mailed in error or lacks merit, failure to respond in some manner by the deadline set in the Office action will result in the application's abandonment.

The petition under 37 CFR 1.181 to withdraw the holding of abandonment is **dismissed**.

Petitioner has submitted corrected drawings, an acceptable showing of the unavoidable nature of the delay in responding to the February 27, 2008 Notice of Allowability, and the petition fee.

The petition under 37 CFR 1.137(a) is **granted.**

After the mailing of this decision, the application will be forwarded to the Office of Data Management for processing into a patent.

Telephone inquiries may be directed to the undersigned at (571) 272-3230.

Shirene Willis Brantley

Shirene Willis Brantley
Senior Petitions Attorney
Office of Petitions

UNITED STATES PATENT AND TRADEMARK OFFICE

UNITED STATES DEPARTMENT OF COMMERCE
United States Patent and Trademark Office
Address: COMMISSIONER FOR PATENTS
P.O. Box 1450
Alexandria, Virginia 22313-1450
www.uspto.gov

APPL NO.	FILING OR 371 (c) DATE	ART UNIT	FIL FEE REC'D	ATTY.DOCKET NO	DRAWINGS	TOT CLMS	IND CLMS
10/975,322	10/28/2004	2642	790	BS02071 CIP	9	20	3

CONFIRMATION NO. 4753

CORRECTED FILING RECEIPT

OC000000015650782

38516
SCOTT P. ZIMMERMAN, PLLC
PO BOX 3822
CARY, NC 27519

Date Mailed: 04/05/2005

Receipt is acknowledged of this regular Patent Application. It will be considered in its order and you will be notified as to the results of the examination. Be sure to provide the U.S. APPLICATION NUMBER, FILING DATE, NAME OF APPLICANT, and TITLE OF INVENTION when inquiring about this application. Fees transmitted by check or draft are subject to collection. Please verify the accuracy of the data presented on this receipt. **If an error is noted on this Filing Receipt, please mail to the Commissioner for Patents P.O. Box 1450 Alexandria Va 22313-1450. Please provide a copy of this Filing Receipt with the changes noted thereon. If you received a "Notice to File Missing Parts" for this application, please submit any corrections to this Filing Receipt with your reply to the Notice. When the USPTO processes the reply to the Notice, the USPTO will generate another Filing Receipt incorporating the requested corrections (if appropriate).**

Applicant(s)

Robert A. Koch, Norcross, GA;

Power of Attorney:

Geoff Sutcliffe--36348
Matthew Mitchem--40731
Jennifer Medlin--41385
Scott Zimmerman--41390
Bambi Walters--45197

Domestic Priority data as claimed by applicant

This application is a CIP of 10/109,934 03/29/2002

Foreign Applications

If Required, Foreign Filing License Granted: 12/07/2004

The country code and number of your priority application, to be used for filing abroad under the Paris Convention, is US10/975,322

Projected Publication Date: Not Applicable

Non-Publication Request: No

Early Publication Request: No

Title

Customized alerts for incoming data messages

Preliminary Class

379

LICENSE FOR FOREIGN FILING UNDER
Title 35, United States Code, Section 184
Title 37, Code of Federal Regulations, 5.11 & 5.15

GRANTED

The applicant has been granted a license under 35 U.S.C. 184, if the phrase "IF REQUIRED, FOREIGN FILING LICENSE GRANTED" followed by a date appears on this form. Such licenses are issued in all applications where the conditions for issuance of a license have been met, regardless of whether or not a license may be required as set forth in 37 CFR 5.15. The scope and limitations of this license are set forth in 37 CFR 5.15(a) unless an earlier license has been issued under 37 CFR 5.15(b). The license is subject to revocation upon written notification. The date indicated is the effective date of the license, unless an earlier license of similar scope has been granted under 37 CFR 5.13 or 5.14.

This license is to be retained by the licensee and may be used at any time on or after the effective date thereof unless it is revoked. This license is automatically transferred to any related applications(s) filed under 37 CFR 1.53(d). This license is not retroactive.

The grant of a license does not in any way lessen the responsibility of a licensee for the security of the subject matter as imposed by any Government contract or the provisions of existing laws relating to espionage and the national security or the export of technical data. Licensees should apprise themselves of current regulations especially with respect to certain countries, of other agencies, particularly the Office of Defense Trade Controls, Department of State (with respect to Arms, Munitions and Implements of War (22 CFR 121-128)); the Office of Export Administration, Department of Commerce (15 CFR 370.10 (j)); the Office of Foreign Assets Control, Department of Treasury (31 CFR Parts 500+) and the Department of Energy.

NOT GRANTED

No license under 35 U.S.C. 184 has been granted at this time, if the phrase "IF REQUIRED, FOREIGN FILING LICENSE GRANTED" DOES NOT appear on this form. Applicant may still petition for a license under 37 CFR 5.12, if a license is desired before the expiration of 6 months from the filing date of the application. If 6 months has lapsed from the filing date of this application and the licensee has not received any indication of a secrecy order under 35 U.S.C. 181, the licensee may foreign file the application pursuant to 37 CFR 5.15(b).

UNITED STATES PATENT AND TRADEMARK OFFICE

UNITED STATES DEPARTMENT OF COMMERCE
United States Patent and Trademark Office
Address: COMMISSIONER FOR PATENTS
P.O. Box 1450
Alexandria, Virginia 22313-1450
www.uspto.gov

ROYLANCE, ABRAMS, BERDO & GOODMAN, L.L.P.
1300 19TH STREET, N.W.
SUITE 600
WASHINGTON,, DC 20036

Mail Date: 05/21/2010

Applicant	: Jae-Gon Son	: DECISION ON REQUEST FOR
Patent Number	: 7652692	: RECALCULATION of PATENT
Issue Date	: 01/26/2010	: TERM ADJUSTMENT IN VIEW
Application No	: 10/975,341	: OF WYETH AND NOTICE OF INTENT TO
Filed	: 10/29/2004	: ISSUE CERTIFICATE OF CORRECTION
		:

The Request for Recalculation is **GRANTED** to the extent indicated.

The patent term adjustment has been determined to be **944** days. The USPTO will *sua sponte* issue a certificate of correction reflecting the amount of PTA days determined by the recalculation.

Prior to the issuance of the certificate of correction, the USPTO will afford patentee an opportunity to be heard and request reconsideration. Accordingly, patentee has **one month or thirty (30) days**, whichever is longer, to file a request for reconsideration of this patent term adjustment calculation. See 35 U.S.C. 154(b)(3)(B)(ii) and 37 CFR 1.322(a)(4). No extensions of time will be granted under 37 CFR 1.136.

Patentee should use document code PET.OP if electronically filing a request for reconsideration of this patent term adjustment calculation. The patentee must also include the information required by 37 CFR 1.705(b)(2) and the fee required by 37 CFR 1.18(e). If patentee does not file a timely request for reconsideration of this patent term adjustment calculation including the information required by 37 CFR 1.705(b)(2) and the fee required by 37 CFR 1.18(e), the USPTO will issue a certificate of correction reflecting the PTA determination noted above.

Patentee should be aware that in order to preserve the right to review in the United States District Court for the District of Columbia of the USPTO patent term adjustment determination, patentee must ensure that he or she also take the steps required under 35 U.S.C. 154(b)(4)(A) in a timely manner. Nothing in the request for recalculation should be construed as providing an alternative time frame for commencing a civil action under 35 U.S.C. 154(b)(4)(A).

Any questions concerning this decision should be directed to the Office of Patent Legal Administration at 571-272-7702.

UNITED STATES PATENT AND TRADEMARK OFFICE

Commissioner for Patents
United States Patent and Trademark Office
P.O. Box 1450
Alexandria, VA 22313-1450
www.uspto.gov

SUGHRUE MION, PLLC
2100 PENNSYLVANIA AVENUE, N.W.
SUITE 800
WASHINGTON DC 20037

MAILED

JUL 23 2010

OFFICE OF PETITIONS

In re Application of	:	DECISION ON
Ohishi et al.	:	REQUEST FOR
Patent Number: 7,662,775	:	RECONSIDERATION OF
Issue Date: 02/16/2010	:	PATENT TERM ADJUSTMENT
Application No. 10/975367	:	and
Filing or 371(c) Date: 10/29/2004	:	NOTICE OF INTENT TO ISSUE
Attorney Docket Number: Q102804	:	CERTIFICATE OF CORRECTION

This is a decision on the petition filed on April 8, 2010, which is being treated as a petition under 37 CFR 1.705(d), requesting that the patent term adjustment indicated on the above-identified patent be corrected to indicate that the term of the above-identified patent is extended or adjusted by two hundred forty-one (241) days.

The petition to correct the patent term adjustment indicated on the above-identified patent to indicate that the term of the above-identified patent is extended or adjusted by two hundred forty-one (241) days is **GRANTED**.

The Office will *sua sponte* issue a certificate of correction. Pursuant to 37 CFR 1.322, the Office will not issue a certificate of correction without first providing assignee or patentee an opportunity to be heard. Accordingly, patentees are given **one (1) month or thirty (30) days**, whichever is longer, from the mail date of this decision to respond. No extensions of time will be granted under § 1.136.

Nothing in this decision shall be construed as a waiver of the requirement of 35 U.S.C. 154(b)(4) that any civil action by an applicant dissatisfied with a determination made by the Director under 35 U.S.C. 154(b)(3) be filed in the United States District Court for the District of Columbia within 180 days after the grant of the patent.

The Office acknowledges submission of the $200.00 fee set forth in 37 CFR 1.18(e). No additional fees are required.

The application is being forwarded to the Certificate of Corrections Branch for issuance of a certificate of correction. The Office will issue a certificate of correction indicating that the term of the above-identified patent is extended or adjusted by **two hundred forty-one (241)** days.

Telephone inquiries specific to this matter should be directed to the undersigned at (571) 272-3232.

/Derek L. Woods/

Derek L. Woods
Attorney
Office of Petitions

Enclosure: Copy of DRAFT Certificate of Correction

UNITED STATES PATENT AND TRADEMARK OFFICE

CERTIFICATE OF CORRECTION

PATENT : 7,662,775 B2

DATED : **February 16, 2010**

INVENTOR(S) : Ohishi et al.

It is certified that error appears in the above-identified patent and that said Letters Patent is hereby
corrected as shown below:

On the cover page,

[*] Notice: Subject to any disclaimer, the term of this patent is extended or adjusted under 35 USC 154(b) by 0 days.

Delete the phrase "by 0 days" and insert – by 241 days--

SPE RESPONSE FOR CERTIFICATE OF CORRECTION

DATE : 1/17/08

Paper No.: ——

TO SPE OF : ART UNIT 2883

SUBJECT : Request for Certificate of Correction for Appl. No.: 10/975406 Patent No.: 7141788B2

Please respond to this request for a certificate of correction within 7 days.

Please review the requested changes/corrections as shown in the **COCIN** document(s) in the IFW application image. No new matter should be introduced, nor should the scope or meaning of the claims be changed.

Please complete the response (see below) and forward the completed response to scanning using document code **COCX**.

Virginia Tolbert
Certificates of Correction Branch

703-308-9390 ext. 113

Thank You For Your Assistance

The request for issuing the above-identified correction(s) is hereby:
Note your decision on the appropriate box.

- ☐ **Approved** — All changes apply.
- ☐ **Approved in Part** — Specify below which changes **do not** apply.
- ☑ **Denied** — State the reasons for denial below.

Comments: There is no oath/declaration signed by "new inventor" Hideki Hasegawa.

SPE

2883
Art Unit

UNITED STATES PATENT AND TRADEMARK OFFICE

Commissioner for Patents
United States Patent and Trademark Office
P.O. Box 1450
Alexandria, VA 22313-1450
www.uspto.gov

February 27, 2007

Stanley P. Fisher
REED SMITH, LLP
3110 Fairview Park Drive
Suite 1400
Falls Church, VA 22042

Patent No.: 7141788 B2
Application No.: 10/975406
Inventor(s): Atsumu Hirabayashi, et al.
Issued: November 28, 2006
Title: **ION SOURCE AND MASS SPECTROMETRIC APPARATUS**

Re: Request for Certificate of Correction

Consideration has been given your request for the issuance of a certificate of correction for the above-identified patent under the provisions of Rule 1.323.

A petition under C.F.R. 1.182 is required to correct the alleged error in the inventor's name. Since inventor's names are printed in accordance with the typed names on the Declaration on file, at the times of payment of the issue fee, and since non-initialed and/or non-dated changes are not taken into consideration no correction is in order here under the provision of C.F.R. 1.322 and /or 1.323.

In view of the foregoing, your request, in this mater, is hereby denied.

Any request under 37 CFR 1.182 (required fee currently $130.00) should be directed to the following address or facsimile number:

By mail: Mail Stop PETITIONS
Commissioner for Patents
Post Office Box 1450
Alexandria, VA 22313-1450

By hand: Customer Service Window
Mail Stop Petitions
Randolph Building
401 Dulany Street
Alexandria, VA 22314

By fax: (571) 273-0025
ATTN: Office of Petitions

If a fee (currently $100) was previously submitted for consideration of a Request for Certificate of Correction, under CFR 1.323, to correct assignment data, no additional fee is required.

Virginia Tolbert
For Cecelia Newman
Decisions & Certificates
of Correction Branch
(703) **308-9390 ext 113** or (703) 308-9390 ext.113

vt

UNITED STATES PATENT AND TRADEMARK OFFICE

COMMISSIONER FOR PATENTS
UNITED STATES PATENT AND TRADEMARK OFFICE
P.O. BOX 1450
ALEXANDRIA, VA 22313-1450
www.uspto.gov

Stanley P. Fisher
REED SMITH LLP
3110 Fairview Park Drive
Suite 1400
Falls Church, VA 22042-4503

MAILED

OCT 12 2006

TECHNOLOGY CENTER 2100

In re Application of: Chikusa, et al.
Application No. 10/975,417
Filed: October 29, 2004
For: DISK ARRAY APPARATUS

DECISION ON PETITION
TO MAKE SPECIAL
(ACCELERATED EXAMINATION)
UNDER M.P.E.P. §708.02 (VIII)

This is a response to the petition filed 26 April 2006, under 37 C.F.R. §1.102(d) and M.P.E.P. §708.02 (VIII): Accelerated Examination, to make the above-identified application special.

The Petition is **DISMISSED**.

M.P.E.P. §708.02, Section VIII which sets out the prerequisites for a grantable petition for Accelerated Examination under 37 C.F.R. §1.102(d) states in relevant part:

A new application (one which has not received any examination by the examiner) may be granted special status provided that applicant (and this term includes applicant's attorney or agent) complies with each of the following items:

(a) Submits a petition to make special accompanied by the fee set forth in 37 CFR 1.17(h);

(b) Presents all claims directed to a single invention, or if the Office determines that all the claims presented are not obviously directed to a single invention, will make an election without traverse as a prerequisite to the grant of special status;

(c) Submits a statement(s) that a pre-examination search was made, listing the field of search by class and subclass, publication, Chemical Abstracts, foreign patents, etc. The pre-examination search must be directed to the invention as claimed in the application for which special status is requested. A search made by a foreign patent office satisfies this requirement;

(d) Submits one copy each of the references deemed most closely related to the subject matter encompassed by the claims if said references are not already of record; and

(e) Submits a detailed discussion of the references, which discussion points out, with the particularity required by 37 CFR 1.111 (b) and (c), how the claimed subject matter is patentable over the references.

In those instances where the request for this special status does not meet all the prerequisites set forth above, **applicant will be notified and the defects in the request will be stated**. The application will remain in the status of a new application awaiting action in its regular turn. In those instances where a request is defective in one or more respects, applicant will be given one opportunity to perfect the request in a renewed petition to make special.

The petition filed 26 April 2006 fails to adequately meet requirement (e) of the criteria set forth above. The discussion of the references does not point out with the particularity required by 37 CFR 1.111(b) and (c) how the claimed subject matter is patentable over the references. The discussion fails to specifically point out how the **language** of **each** of independent **claims** 21 and 39 patentably distinguishes them from **each** of the **references**. Rather, the discussion states that the references (e.g. 2005/0138258, 2005/0138154 & 2005/0138191 to Seto), do not teach features of "determining a number of multiplexing based on a ratio of the transmission rate of the second physical link to the transmission rate of the first physical link, **multiplexing data equal to the number of multiplexing**, transmits a predetermined parameter **to make** the SAS expander demultiplex data **following the predetermined parameter**" (as recited in claim 12 and similar recite in claim 39). However, this language does not appear in independent claim 39. In addition, the limitations designated as "features (1) and (2)" on page 3 of the petition also do not appear to be recited in the instant independent claims. Finally, Petitioner makes reference to independent claim 1 in the instant petition (pages 2 and 3), however claim 1 was cancelled with the amendment filed 26 April 2006.

Petitioner should ensure the discussion is specific to the language found in the pending independent claims.

Petition to Make Special **DISMISSED**.

Petitioner is given one opportunity to perfect the petition. Any request for reconsideration must be filed within TWO MONTHS of the mail date of this decision.

Until the renewed petition is submitted, the application will be returned to the examiner's docket to await treatment on the merits in the normal order of examination.

Brian L. Johnson
Special Program Examiner
Technology Center 2100
Computer Architecture, Software and Information Security
571-272-3595

UNITED STATES PATENT AND TRADEMARK OFFICE

COMMISSIONER FOR PATENTS
UNITED STATES PATENT AND TRADEMARK OFFICE
P.O. BOX 1450
ALEXANDRIA, VA 22313-1450
www.uspto.gov

MATTINGLY, STANGER, MALUR &
BRUNDIDGE, P.C.
1800 Diagonal Road
Suite 370
Alexandria, VA 22314

MAILED

SEP 2 8 2005

Technology Center 2100

In re Application of:
KADOIRI et al.
Application No. 10/975,447
Filed: October 29, 2004
For: COMPUTER SYSTEM FOR LOAD BALANCE, PROGRAM AND METHOD FOR SETTING PATHS

DECISION ON PETITION TO MAKE SPECIAL

This is a decision on the petitions, filed on March 23, 2005 and June 22, 2005, under 37 C.F.R. §102(d) and M.P.E.P. § 708.02(VIII): Accelerated Examination, to make the above-identified application special.

The petition is **GRANTED**.

M.P.E.P. § 708.02, Section VIII which sets out the prerequisites for a grantable petition for Accelerated Examination under 37 C.F.R. § 102(d) states in relevant part:

> A new application (one which has not received any examination by the examiner) may be granted special status provided that applicant (and this term includes applicant's attorney or agent) complies with each of the following items:
>
> (A) Submits a petition to make special, accompanied by the fee set forth in 37 CFR 1.17(h);
>
> (B) Presents all claims directed to a single invention, or if the Office determines that all the claims presented are not obviously directed to a single invention, will make an election without traverse as a prerequisite to the grant of special status;
>
> (C) Submits a statement(s) that a pre-examination search was made, listing the field of search by class and subclass, publication, Chemical Abstracts, foreign patents, etc. A search made by a foreign patent office satisfies this requirement;
>
> (D) Submits one copy each of the references deemed most closely related to the subject matter encompassed by the claims if said references are not already of record; and
>
> (E) Submits a detailed discussion of the references, which discussion points out, with the particularity required by 37 CFR 1.111 (b) and (c), how the claimed subject matter is patentable over the references.

Applicant's submissions of March 23, 2005 and June 22, 2005 meet all the criteria set out above.

Accordingly, the petition is **GRANTED**. The application file is being forwarded to the Examiner for accelerated examination in accordance with M.P.E.P. § 708.02. If the application is subsequently allowed, it will be given priority for printing. See M.P.E.P. § 1309.

Vincent N. Trans
Special Program Examiner
Technology Center 2100
Computer Architecture, Software, and
Information Security
571-272-3613

UNITED STATES PATENT AND TRADEMARK OFFICE

Commissioner for Patents
United States Patent and Trademark Office
P.O. Box 1450
Alexandria, VA 22313-1450
www.uspto.gov

ANTINELLI TERRY STOUT & KRAUS LLP
1300 NORTH SEVENTEENTH STREET
SUITE 1800
ARLINGTON, VA 22209-3873

MAILED

JUN 22 2010

OFFICE OF PETITIONS

In re Application of
Tomio IWASAKI et al
Application No. 10/975,448
Filed: October 29, 2004
Attorney Docket No. 500.44405X00

DECISION ON PETITION

This is a decision on the petition, filed August 24, 2009, which is being treated as a petition under 37 CFR 1.181, requesting withdrawal of the holding of abandonment in the above-identified application.

The petition is **GRANTED**.

This application was held abandoned for failure to timely respond to the Office action of January 2, 2009, which set a three (3) months shortened statutory time limit . Extensions of time were permitted under 37 CFR 1.136(a). A three (3) months extension of time was requested on July 2, 2009. Accordingly, a reply was due on or before July 2, 2009.

Petitioner states that a timely reply was mailed via certificate of mailing on July 2, 2009, which included the following papers: transmittal form, response, request for RCE, an amendment, and a petition for three (3) MONTHS EXTENSION OF TIME.

A review of the application file indicates that a response was in fact received with a date of July 2, 2009, making that response timely. Accordingly, the holding of abandonment for failure to timely file a reply to the Office action of January 2, 2009 is hereby withdrawn and the application restored to pending status.

This application is being referred to Technology Center Art Unit 2814 for appropriate action in the normal course of business on the reply received with petition.

Telephone inquiries concerning this decision should be directed to the undersigned at 571-272-0602.

Thurman K. Page
Petitions Examiner
Office of Petitions

UNITED STATES PATENT AND TRADEMARK OFFICE

COMMISSIONER FOR PATENTS
UNITED STATES PATENT AND TRADEMARK OFFICE
P.O. BOX 1450
ALEXANDRIA, VA 22313-1450
www.uspto.gov

BIRCH STEWART KOLASCH & BIRCH
PO BOX 747
FALLS CHURCH, VA 22040-0747

COPY MAILED

JUL 12 2006

OFFICE OF PETITIONS

In re Application of :
Rkahi Kaneko, et al. :
Application No. 10/975,460 :
Filed: October 29, 2004 :
Attorney Docket No.: 0965-0437PUS1 :

ON PETITION

This is a decision on the petition, filed June 26, 2006, under 37 CFR 1.313(c)(2) to withdraw the above-identified application from issue after payment of the issue fee.

The petition is **GRANTED**.

The above-identified application is withdrawn from issue for consideration of a submission under 37 CFR 1.114 (request for continued examination). See 37 CFR 1.313(c)(2).

Petitioner is advised that the issue fee paid on January 31, 2006, in the above-identified application cannot be refunded. If, however, the above-identified application is again allowed, petitioner may request that it be applied towards the issue fee required by the new Notice of Allowance. [1]

Telephone inquiries relating to this decision should be directed to the undersigned at (571) 272-3204.

The application is being referred to Technology Center AU 3747 for further processing of the request for continued examination under 37 CFR 1.114.

Sherry D. Brinkley
Petitions Examiner
Office of Petitions

[1]The request to apply the issue fee to the new Notice may be satisfied by completing and returning the new Issue Fee Transmittal Form PTOL-85(b), which includes the following language thereon: "Commissioner for Patents is requested to apply the Issue Fee and Publication Fee (if any) or re-apply any previously paid issue fee to the application identified above." Petitioner is advised that, whether a fee is indicated as being due or not, the Issue Fee Transmittal Form **must** be completed and timely submitted to avoid abandonment. Note the language in bold text on the first page of the Notice of Allowance and Fee(s) Due (PTOL-85).

UNITED STATES PATENT AND TRADEMARK OFFICE

Commissioner for Patents
United States Patent and Trademark Office
P.O. Box 1450
Alexandria, VA 22313-1450
www.uspto.gov

ROSENBERG, KLEIN & LEE
3458 ELLICOTT CENTER DRIVE-SUITE 101
ELLICOTT CITY, MD 21043

COPY MAILED

MAY 01 2007

OFFICE OF PETITIONS

In re Application of :
Hsien-Chung Tuan Mu :
Application No. 10/975486 :
Filing or 371(c) Date: 10/29/2004 :
Attorney Docket Number: :
MR1891-207 : ON PETITION

This is a decision on the Petition to Withdraw Holding of Abandonment Based on Evidence That a Reply was Timely Filed and Further Request for Entry of Amendment, filed February 26, 2007. The Request is properly treated under 37 CFR 1.181(a).

This Petition is hereby **granted**.

The above-identified application became abandoned for failure to timely and properly reply to the non-final Office action, mailed May 4, 2006. The Office action set a three (3) month period for reply. Extensions of time were available under 37 CFR 1.136(a). No response having been received, the application became abandoned August 5, 2006. A Notice of Abandonment was mailed February 8, 2007.

Applicant's Assertion

Applicant files the instant petition and asserts that a timely reply to the Office action was filed, on July 7, 2006, and received by this Office as evidenced by the copy of Applicant's return-receipt postcards. In support of this assertion, Applicant files a copy of the Reply and a copy of his return-receipt postcards acknowledging receipt by this Office of and Amendment and Terminal Disclaimer on July 7, 2006.

A review of the return-receipt postcards reveal that Applicant is correct. The postcards acknowledges receipt by this Office an Amendment and Terminal Disclaimer on July 7, 2006.

In view of the foregoing, the petition is granted. The holding of abandonment is hereby withdrawn.

No petition fee has been charged and none is due.

The application will be referred to Technology Center Art Unit 3692 for processing of the Amendment and Terminal Disclaimer, and for continued processing in due course.

Telephone inquiries concerning this matter should be directed to the undersigned at (571) 272-3232.

Derek L. Woods
Attorney
Office of Petitions

UNITED STATES PATENT AND TRADEMARK OFFICE

Commissioner for Patents
United States Patent and Trademark Office
P.O. Box 1450
Alexandria, VA 22313-1450
www.uspto.gov

SUGHRUE MION, PLLC
2100 PENNSYLVANIA AVENUE NW
SUITE 800
WASHINGTON, DC 20037

COPY MAILED

OCT 01 2007

OFFICE OF PETITIONS

In re Application of Hubert Holderer et al Application No. 10/975,496 Filed: October 29, 2004 Attorney Docket No. Q84467	DECISION GRANTING PETITION UNDER 37 CFR 1.313(c)(2)

This is a decision on the petition, filed October 1, 2007, under 37 CFR 1.313(c)(2) to withdraw the above-identified application from issue after payment of the issue fee.

The petition is **GRANTED**.

The above-identified application is withdrawn from issue for consideration of a submission under 37 CFR 1.114 (request for continued examination). See 37 CFR 1.313(c)(2).

Petitioner is advised that the issue fee paid on August 24, 2007 in the above-identified application cannot be refunded. If, however, the above-identified application is again allowed, petitioner may request that it be applied towards the issue fee required by the new Notice of Allowance.[1]

Telephone inquiries should be directed to the undersigned at (571) 272-3218.

This matter is being referred to Technology Center AU 2851 for processing of the request for continued examination under 37 CFR 1.114 and for consideration of the Information Disclosure Statement, both of which were filed on September 26, 2007.

Frances Hicks

Frances Hicks
Petitions Examiner
Office of Petitions

C:\Documents and Settings\fhicks\My Documents\470\Oct11\975496.wpd

---

[1] *The request to apply the issue fee to the new Notice may be satisfied by completing and returning the new Part B – Fee(s) Transmittal Form (along with any balance due at the time of submission). Petitioner is advised that the Issue Fee Transmittal Form **must** be completed and timely submitted to avoid abandonment.*

UNITED STATES PATENT AND TRADEMARK OFFICE

Commissioner for Patents
United States Patent and Trademark Office
P.O. Box 1450
Alexandria, VA 22313-1450
www.uspto.gov

WILDMAN HARROLD ALLEN & DIXON
225 WEST WACKER DRIVE
SUITE 2800
CHICAGO IL 60606

COPY MAILED

JUL 18 2007

OFFICE OF PETITIONS

In re Application of	:	
Howard Frysh, et al.	:	
Application No. 10/975,515	:	DECISION ON PETITION
Filed: October 28, 2004	:	TO WITHDRAW
Attorney Docket No. D4D-1	:	FROM RECORD
	:	

This is a decision on the Request to Withdraw as attorney or agent of record under 37 C.F.R. § 1.36(b) filed February 1, 2007.

The request is **NOT APPROVED**.

A grantable request to withdraw as attorney/agent of record must be signed by every attorney/agent seeking to withdraw or contain a clear indication that one attorney is signing on behalf of another/others. A request to withdraw will not be approved unless at least 30 (thirty) days would remain between the date of approval and the later of the expiration date of a time to file a response or the expiration date of the maximum time period which can be extended under 37 C.F.R. § 1.136(a).

The request cannot be approved because no reasons for withdrawal have been provided. The Office cannot, at this time, determine whether practitioner's request is one of the mandatory or permissive reasons enumerated in 37 CFR 10.40. Any subsequent requests must include reasons for withdrawal. Please note that there is a space provided for on PTO/SB/83 (Request to Withdraw as Attorney or Agent) to supply practitioner's reasons.

All future communications from the Office will continue to be directed to the above-listed address until otherwise notified by applicant.

There are no pending Office actions at the present time.

Telephone inquiries concerning this decision should be directed to undersigned at 571-272-1642.

April M. Wise
Petitions Examiner
Office of Petitions

cc: DAVID JUDSON
TOLLWAY PLAZA II
15950 DALLAS PARKWAY
SUITE 225
DALLAS, TX 75248

UNITED STATES PATENT AND TRADEMARK OFFICE

Commissioner for Patents
United States Patent and Trademark Office
P.O. Box 1450
Alexandria, VA 22313-1450
www.uspto.gov

WILDMAN HARROLD ALLEN & DIXON LLP
225 WEST WACKER DRIVE
SUITE 2800
CHICAGO, IL 60606

COPY MAILED

JUL 24 2008

OFFICE OF PETITIONS

In re Application of	:	
Howard Frysh, et al.	:	
Application No. 10/975,515	:	DECISION ON PETITION
Filed: October 28, 2004	:	TO WITHDRAW
Attorney Docket No. D4D-1	:	FROM RECORD

This is a decision on the renewed Request to Withdraw as attorney or agent of record under 37 C.F.R. § 1.36(b), filed July 26, 2007.

The request is **APPROVED**.

A grantable request to withdraw as attorney/agent of record must be signed by every attorney/agent seeking to withdraw or contain a clear indication that one attorney is signing on behalf of another/others. A request to withdraw will not be approved unless at least 30 (thirty) days would remain between the date of approval and the later of the expiration date of a time to file a response or the expiration date of the maximum time period which can be extended under 37 C.F.R. § 1.136(a).

The request was signed by Gary R. Gillen on behalf of all attorneys of record who are associated with customer No. 26689.

All attorneys/agents associated with the Customer Number 26689 have been withdrawn.

Applicant is reminded that there is no attorney of record at this time.

The request to change the correspondence of record is not acceptable as the requested correspondence address is not that of: (1) the first named signing inventor; or (2) an intervening assignee of the entire interest under 37 C.F.R 3.71. All future communications from the Office will be directed to the first named signing inventor at the first copied address below until otherwise properly notified by the applicant.

In order to request or take action in a patent matter, the assignee must establish its ownership of the patent to the satisfaction of the Director. In this regard, a Statement under 37 CFR 3.73(b) must have either: (i) documentary evidence of a chain of title from the original owner to the assignee (*e.g.*, copy of an executed assignment), and a statement affirming that the documentary evidence of the chain of title from the original owner to the assignee was or concurrently is being submitted for recordation pursuant to § 3.11; or (ii) a statement specifying where documentary evidence of a chain of title from the original owner to the assignee is recorded in the assignment records of the Office (*e.g.*, reel and frame number).

There is an outstanding Office action mailed April 29, 2008 that requires a reply from the applicant.

Telephone inquiries concerning this decision should be directed to undersigned at 571-272-1642.

April M. Wise
Petitions Examiner
Office of Petitions

cc: HOWARD FRYSH
7212 DEBBE DRIVE
DALLAS, TX 75252

cc: DAVID JUDSON
TOLLWAY PLAZA II
15950 DALLAS PARKWAY
SUITE 225
DALLAS, TX 75248

UNITED STATES PATENT AND TRADEMARK OFFICE

UNITED STATES DEPARTMENT OF COMMERCE
United States Patent and Trademark Office
Address: COMMISSIONER FOR PATENTS
P.O. Box 1450
Alexandria, Virginia 22313-1450
www.uspto.gov

APPLICATION NUMBER	FILING OR 371(C) DATE	FIRST NAMED APPLICANT	ATTY. DOCKET NO./TITLE
10/975,515	10/28/2004	Howard Frysh	D4D-1

CONFIRMATION NO. 8089

POWER OF ATTORNEY NOTICE

26689
WILDMAN HARROLD ALLEN & DIXON LLP
225 WEST WACKER DRIVE, SUITE 2800
CHICAGO, IL 60606

OC000000031168577

Date Mailed: 07/24/2008

NOTICE REGARDING CHANGE OF POWER OF ATTORNEY

This is in response to the Power of Attorney filed 07/26/2007.

- The withdrawal as attorney in this application has been accepted. Future correspondence will be mailed to the new address of record. 37 CFR 1.33.

/amwise/

Office of Data Management, Application Assistance Unit (571) 272-4000, or (571) 272-4200, or 1-888-786-0101

UNITED STATES PATENT AND TRADEMARK OFFICE

Commissioner for Patents
United States Patent and Trademark Office
P.O. Box 1450
Alexandria, VA 22313-1450
www.uspto.gov

RABIN & BERDO PC
1101 14TH ST
SUITE 500
WASHINGTON DC 20005

COPY MAILED

JUN 08 2005

OFFICE OF PETITIONS

In re Application of	:	
Tai-Her Yang	:	
Application No. 10/975,525	:	DECISION ON PETITION
Filed: October 29, 2004	:	
Attorney Docket No. GIAN 140	:	

This is a decision on the paper titled "RESPONSE", filed March 2, 2005, which is being treated as a petition under 37 CFR 1.53 to accord the instant application a filing date of October 29, 2004.

The petition is **GRANTED**.

The application was filed on October 29, 2004. However, on January 31, 2005, the Office mailed a Notice of Incomplete Nonprovisional Application, stating that the application had not been accorded a filing date because the specification did not include at least one claim.

A review of the application file reveals the presence of claims on pages 127 - 247 of the specification. Clearly the Notice of Incomplete Nonprovisional Application was mailed in error and is hereby **WITHDRAWN**.

Given the basis for granting this petition, no petition fee was required, and none has been charged.

The application is being returned to the Office of Initial Patent Examination for further processing with a filing date of October 29, 2004, using the application papers deposited on that date, including 38 claims on pages 127 - 247 of the specification.

Telephone inquiries specific to this matter should be directed to the undersigned at 571-272-3207.

Cliff Congo
Petitions Attorney
Office of Petitions

UNITED STATES PATENT AND TRADEMARK OFFICE

UNITED STATES DEPARTMENT OF COMMERCE
United States Patent and Trademark Office
Address: COMMISSIONER FOR PATENTS
P.O. Box 1450
Alexandria, Virginia 22313-1450
www.uspto.gov

APPL NO.	FILING OR 371 (c) DATE	ART UNIT	FIL FEE REC'D	ATTY.DOCKET NO	DRAWINGS	TOT CLMS	IND CLMS
10/975,554	10/28/2004	2811	1132	1433.136.101/13.396	10	22	5

CONFIRMATION NO. 1192

UPDATED FILING RECEIPT

OC000000015213718

025281
DICKE, BILLIG & CZAJA, P.L.L.C.
FIFTH STREET TOWERS
100 SOUTH FIFTH STREET, SUITE 2250
MINNEAPOLIS, MN 55402

Date Mailed: 02/17/2005

Receipt is acknowledged of this regular Patent Application. It will be considered in its order and you will be notified as to the results of the examination. Be sure to provide the U.S. APPLICATION NUMBER, FILING DATE, NAME OF APPLICANT, and TITLE OF INVENTION when inquiring about this application. Fees transmitted by check or draft are subject to collection. Please verify the accuracy of the data presented on this receipt. **If an error is noted on this Filing Receipt, please write to the Office of Initial Patent Examination's Filing Receipt Corrections, facsimile number 703-746-9195. Please provide a copy of this Filing Receipt with the changes noted thereon. If you received a "Notice to File Missing Parts" for this application, please submit any corrections to this Filing Receipt with your reply to the Notice. When the USPTO processes the reply to the Notice, the USPTO will generate another Filing Receipt incorporating the requested corrections (if appropriate).**

Applicant(s)

Wolfgang Horn, Klagenfurt, AUSTRIA;

Power of Attorney: The patent practitioners associated with Customer Number **45782**.

Domestic Priority data as claimed by applicant

Foreign Applications

GERMANY 103 50 162.2 10/28/2003

If Required, Foreign Filing License Granted: 01/18/2005

The country code and number of your priority application, to be used for filing abroad under the Paris Convention, is US10/975,554

Projected Publication Date: 05/26/2005

Non-Publication Request: No

Early Publication Request: No

Title

Semiconductor component

Preliminary Class

257

LICENSE FOR FOREIGN FILING UNDER
Title 35, United States Code, Section 184
Title 37, Code of Federal Regulations, 5.11 & 5.15

GRANTED

The applicant has been granted a license under 35 U.S.C. 184, if the phrase "IF REQUIRED, FOREIGN FILING LICENSE GRANTED" followed by a date appears on this form. Such licenses are issued in all applications where the conditions for issuance of a license have been met, regardless of whether or not a license may be required as set forth in 37 CFR 5.15. The scope and limitations of this license are set forth in 37 CFR 5.15(a) unless an earlier license has been issued under 37 CFR 5.15(b). The license is subject to revocation upon written notification. The date indicated is the effective date of the license, unless an earlier license of similar scope has been granted under 37 CFR 5.13 or 5.14.

This license is to be retained by the licensee and may be used at any time on or after the effective date thereof unless it is revoked. This license is automatically transferred to any related applications(s) filed under 37 CFR 1.53(d). This license is not retroactive.

The grant of a license does not in any way lessen the responsibility of a licensee for the security of the subject matter as imposed by any Government contract or the provisions of existing laws relating to espionage and the national security or the export of technical data. Licensees should apprise themselves of current regulations especially with respect to certain countries, of other agencies, particularly the Office of Defense Trade Controls, Department of State (with respect to Arms, Munitions and Implements of War (22 CFR 121-128)); the Office of Export Administration, Department of Commerce (15 CFR 370.10 (j)); the Office of Foreign Assets Control, Department of Treasury (31 CFR Parts 500+) and the Department of Energy.

NOT GRANTED

No license under 35 U.S.C. 184 has been granted at this time, if the phrase "IF REQUIRED, FOREIGN FILING LICENSE GRANTED" DOES NOT appear on this form. Applicant may still petition for a license under 37 CFR 5.12, if a license is desired before the expiration of 6 months from the filing date of the application. If 6 months has lapsed from the filing date of this application and the licensee has not received any indication of a secrecy order under 35 U.S.C. 181, the licensee may foreign file the application pursuant to 37 CFR 5.15(b).

UNITED STATES PATENT AND TRADEMARK OFFICE

Commissioner for Patents
United States Patent and Trademark Office
P.O. Box 1450
Alexandria, VA 22313-1450
www.uspto.gov

TOWNSEND AND TOWNSEND AND CREW
LLP/EVALVE INC. (020489)
TWO EMBARCADERO CENTER, 8TH FLOOR
SAN FRANCISCO, CA 94111

COPY MAILED
SEP 18 2008

In re Application of	:
Eric A. Goldfarb et al	:
Application No. 10/975,555	: DECISION ON PETITIONS
Filed: October 27, 2004	: UNDER 37 CFR 1.78(a)(3) AND (a)(6)
Attorney Docket No. 020489-001900US	:

This is a decision on the petitions under 37 CFR §§ 1.78(a)(3) and 1.78(a)(6), filed January 18, 2008 and supplemented on February 6, 2008, to accept an unintentionally delayed claim under 35 U.S.C. §§120 and 119(e) for the benefit of the prior-filed applications set forth in the concurrently filed Application Data Sheet.

The petitions are **GRANTED.**

A petition for acceptance of a claim for late priority under 37 CFR §§ 1.78(a)(3) and 1.78(a)(6) is only applicable to those applications filed on or after November 29, 2000. Further, the petition is appropriate only after the expiration of the period specified in 37 CFR §§ 1.78(a)(2)(ii) and 1.78(a)(5)(ii). In addition, the petition under 37 CFR §§ 1.78(a)(3) and 1.78(a)(6) must be accompanied by:

(1) the reference required by 35 U.S.C. §§ 120 and 119(e) and 37 CFR §§ 1.78(a)(2)(i) and 1.78(a)(5)(i) of the prior-filed application, unless previously submitted;

(2) the surcharge set forth in § 1.17(t); and

(3) a statement that the entire delay between the date the claim was due under 37 CFR §§ 1.78(a)(2)(ii) and 1.78(a)(5)(ii) and the date the claim was filed was unintentional. The Director may require additional information where there is a question whether the delay was unintentional.

Additionally, the instant nonprovisional application must be pending at the time of filing of the reference to the prior-filed provisional application as required by 37 CFR 1.78(a)(5)(ii). Further, the nonprovisional application claiming the benefit of the prior-filed provisional application must have been filed within twelve months of the filing date of the prior-filed provisional application.

All the above requirements having been satisfied, the late claim for benefit of priority under 35 U.S.C. §§ 120 and 119(e) is accepted as being unintentionally delayed.

Also, 37 CFR §§ 1.78(a)(3) and 1.78(a)(6) require a statement that the entire delay between the date the claim was due under 37 CFR §§ 1.78(a)(2)(ii) and 1.78(a)(5)(ii) and the date the claim was filed was unintentional. Since the statement appearing in the petition varies from the required language, the statement is being construed as the statement required by 37 CFR §§1.78(a)(3) and 1.78(a))(6). If this is not a correct reading of the statement appearing in the petition, petitioner should promptly notify the Office.

The granting of the petition to accept the delayed benefit claim to the prior-filed applications under 37 CFR §§ 1.78(a)(3) and 1.78(a)(6) should not be construed as meaning that this application is entitled to the benefit of the filing date of the prior-filed applications. In order for this application to be entitled to the benefit of the prior-filed applications, all other requirements under 35 U.S.C. §§120 and 1.78(a)(1) and (a)(2) and under 35 U.S.C. §119(e) and 37 CFR 1.78(a)(4) and (a)(5) must be met. Similarly, the fact that the corrected Filing Receipt accompanying this decision on petition includes the prior-filed applications should not be construed as meaning that applicant is entitled to the claim for benefit of priority to the prior-filed applications noted thereon. Accordingly, the examiner will, in due course, consider this benefit claim and determine whether the application is entitled to the benefit of the earlier filing date.

A corrected Filing Receipt, which includes the priority claim to the prior-filed applications, accompanies this decision on petition.

Any questions concerning this matter may be directed to Irvin Dingle at (571) 272-3210. All other inquiries concerning either the examination procedures or status of the application should be directed to the Technology Center.

This application is being forwarded to Technology Center Art Unit 3773 for consideration by the examiner of the claim under 35 U.S.C. § §120 and 119(e) of the prior-filed nonprovisional and provisional applications.

David Buczi
Petition Examiner
Office of Petitions

ATTACHMENT : Corrected Filing Receipt

UNITED STATES PATENT AND TRADEMARK OFFICE

UNITED STATES DEPARTMENT OF COMMERCE
United States Patent and Trademark Office
Address: COMMISSIONER FOR PATENTS
P.O. Box 1450
Alexandria, Virginia 22313-1450
www.uspto.gov

APPLICATION NUMBER	FILING or 371(c) DATE	GRP ART UNIT	FIL FEE REC'D	ATTY.DOCKET.NO	TOT CLAIMS	IND CLAIMS
10/975,555	10/27/2004	3773	520	020489-001900US	29	4

CONFIRMATION NO. 1209

CORRECTED FILING RECEIPT

76081
TOWNSEND AND TOWNSEND AND CREW
LLP/EVALVE INC. (020489)
TWO EMBARCADERO CENTER
8TH FLOOR
SAN FRANCISCO, CA 94111

OC000000032161961

Date Mailed: 09/18/2008

Receipt is acknowledged of this non-provisional patent application. The application will be taken up for examination in due course. Applicant will be notified as to the results of the examination. Any correspondence concerning the application must include the following identification information: the U.S. APPLICATION NUMBER, FILING DATE, NAME OF APPLICANT, and TITLE OF INVENTION. Fees transmitted by check or draft are subject to collection. Please verify the accuracy of the data presented on this receipt. **If an error is noted on this Filing Receipt, please submit a written request for a Filing Receipt Correction. Please provide a copy of this Filing Receipt with the changes noted thereon. If you received a "Notice to File Missing Parts" for this application, please submit any corrections to this Filing Receipt with your reply to the Notice. When the USPTO processes the reply to the Notice, the USPTO will generate another Filing Receipt incorporating the requested corrections**

Applicant(s)

Eric A. Goldfarb, San Francisco, CA;
Alfred H. Raschdorf, San Francisco, CA;
Jaime E. Sarabia, San Jose, CA;
Sylvia Wen-Chin Fan, Burlingame, CA;
Kent D. Dell, Redwood City, CA;
Jan Komtebedde, Los Gatos, CA;
Ferolyn Powell, San Francisco, CA;

Assignment For Published Patent Application

Evalve, Inc., Menlo Park, CA

Power of Attorney: The patent practitioners associated with Customer Number 76081

Domestic Priority data as claimed by applicant

This application is a CIP of 10/803,444 03/17/2004
which is a CON of 09/894,463 06/27/2001 PAT 6,752,813
which is a CIP of 09/544,930 04/07/2000 PAT 6,629,534
which claims benefit of 60/128,690 04/09/1999

Foreign Applications

If Required, Foreign Filing License Granted: 01/25/2005

The country code and number of your priority application, to be used for filing abroad under the Paris Convention, is **US 10/975,555**

Projected Publication Date: Not Applicable

Non-Publication Request: No

Early Publication Request: No
**** SMALL ENTITY ****
Title

Fixation devices for variation in engagement of tissue

Preliminary Class

606

PROTECTING YOUR INVENTION OUTSIDE THE UNITED STATES

Since the rights granted by a U.S. patent extend only throughout the territory of the United States and have no effect in a foreign country, an inventor who wishes patent protection in another country must apply for a patent in a specific country or in regional patent offices. Applicants may wish to consider the filing of an international application under the Patent Cooperation Treaty (PCT). An international (PCT) application generally has the same effect as a regular national patent application in each PCT-member country. The PCT process **simplifies** the filing of patent applications on the same invention in member countries, but **does not result** in a grant of "an international patent" and does not eliminate the need of applicants to file additional documents and fees in countries where patent protection is desired.

Almost every country has its own patent law, and a person desiring a patent in a particular country must make an application for patent in that country in accordance with its particular laws. Since the laws of many countries differ in various respects from the patent law of the United States, applicants are advised to seek guidance from specific foreign countries to ensure that patent rights are not lost prematurely.

Applicants also are advised that in the case of inventions made in the United States, the Director of the USPTO must issue a license before applicants can apply for a patent in a foreign country. The filing of a U.S. patent application serves as a request for a foreign filing license. The application's filing receipt contains further information and guidance as to the status of applicant's license for foreign filing.

Applicants may wish to consult the USPTO booklet, "General Information Concerning Patents" (specifically, the section entitled "Treaties and Foreign Patents") for more information on timeframes and deadlines for filing foreign patent applications. The guide is available either by contacting the USPTO Contact Center at 800-786-9199, or it can be viewed on the USPTO website at http://www.uspto.gov/web/offices/pac/doc/general/index.html.

For information on preventing theft of your intellectual property (patents, trademarks and copyrights), you may wish to consult the U.S. Government website, http://www.stopfakes.gov. Part of a Department of Commerce initiative, this website includes self-help "toolkits" giving innovators guidance on how to protect intellectual property in specific countries such as China, Korea and Mexico. For questions regarding patent enforcement issues, applicants may call the U.S. Government hotline at 1-866-999-HALT (1-866-999-4158).

LICENSE FOR FOREIGN FILING UNDER

Title 35, United States Code, Section 184

Title 37, Code of Federal Regulations, 5.11 & 5.15

GRANTED

The applicant has been granted a license under 35 U.S.C. 184, if the phrase "IF REQUIRED, FOREIGN FILING LICENSE GRANTED" followed by a date appears on this form. Such licenses are issued in all applications where the conditions for issuance of a license have been met, regardless of whether or not a license may be required as set forth in 37 CFR 5.15. The scope and limitations of this license are set forth in 37 CFR 5.15(a) unless an earlier license has been issued under 37 CFR 5.15(b). The license is subject to revocation upon written notification. The date indicated is the effective date of the license, unless an earlier license of similar scope has been granted under 37 CFR 5.13 or 5.14.

This license is to be retained by the licensee and may be used at any time on or after the effective date thereof unless it is revoked. This license is automatically transferred to any related applications(s) filed under 37 CFR 1.53(d). This license is not retroactive.

The grant of a license does not in any way lessen the responsibility of a licensee for the security of the subject matter as imposed by any Government contract or the provisions of existing laws relating to espionage and the national security or the export of technical data. Licensees should apprise themselves of current regulations especially with respect to certain countries, of other agencies, particularly the Office of Defense Trade Controls, Department of State (with respect to Arms, Munitions and Implements of War (22 CFR 121-128)); the Bureau of Industry and Security, Department of Commerce (15 CFR parts 730-774); the Office of Foreign AssetsControl, Department of Treasury (31 CFR Parts 500+) and the Department of Energy.

NOT GRANTED

No license under 35 U.S.C. 184 has been granted at this time, if the phrase "IF REQUIRED, FOREIGN FILING LICENSE GRANTED" DOES NOT appear on this form. Applicant may still petition for a license under 37 CFR 5.12, if a license is desired before the expiration of 6 months from the filing date of the application. If 6 months has lapsed from the filing date of this application and the licensee has not received any indication of a secrecy order under 35 U.S.C. 181, the licensee may foreign file the application pursuant to 37 CFR 5.15(b).

UNITED STATES PATENT AND TRADEMARK OFFICE

Commissioner for Patents
United States Patent and Trademark Office
P.O. Box 1450
Alexandria, VA 22313-1450
www.uspto.gov

HOLME ROBERTS & OWEN LLP
299 SOUTH MAIN, SUITE 800
SALT LAKE CITY, UT 84111

COPY MAILED

FEB 15 2005

OFFICE OF PETITIONS

In re Application of	:	
Dennis B. Brown et al	:	
Application No. 10/975,561	:	NOTICE
Filed: October 28, 2004	:	
Attorney Docket No. 45824-01013	:	

This is a notice regarding your request for acceptance of a fee deficiency submission under 37 CFR 1.28. On September 1, 1998, the Court of Appeals for the Federal Circuit held that 37 CFR 1.28(c) is the sole provision governing the time for correction of the erroneous payment of the issue fee as a small entity. **See DH Technology v. Synergystex International, Inc. 154 F.3d 1333, 47 USPQ2d 1865 (Fed. Cir. Sept. 1, 1998).**

The Office no longer investigates or rejects original or reissue applications under 37 CFR 1.56. **1098 Off. Gaz. Pat. Office 502 (January 3, 1989)**. Therefore, nothing in this Notice is intended to imply that an investigation was done.

Your fee deficiency submission under 37 CFR 1.28 is hereby **ACCEPTED**.

This application no longer qualifies for small entity status. Accordingly, all future fees must be paid at the large entity rate.

As requested, a corrected Filing Receipt accompanies this Notice.

Inquiries related to this communication should be directed to the undersigned at (571) 272-3218.

This matter is being referred to Technology Center AU 3754.

Frances Hicks

Frances Hicks
Petitions Examiner
Office of Petitions
Office of the Deputy Commissioner
for Patent Examination Policy

Enclosure: Corrected Filing Receipt

UNITED STATES PATENT AND TRADEMARK OFFICE

Commissioner for Patents
United States Patent and Trademark Office
P.O. Box 1450
Alexandria, VA 22313-1450
www.uspto.gov

MAILED
FROM DIRECTORS OFFICE

OCT 13 2005

TECHNOLOGY CENTER 3600

SCHOX PLC
209 N. MAIN STREET #200
ANN ARBOR MI 48104

In re Application of:
Joseph Valencic et al.
Serial No. 10/975,563
Filed: October 27, 2004
For: WEAPON AND INPUT DEVICE TO RECORD INFORMATION

DECISION ON PETITION TO MAKE SPECIAL (COUNTER TERRORISM)

This is a decision on the petition filed August 24, 2005 under 37 CFR 1.102 to make the above-identified application special. Though not specified, the petition appears to be relying upon MPEP 708.02, Section XI: Inventions for Countering Terrorism. If this is not the intended basis for petitioning to make this application special under 37 CFR 1.102, applicants should specify under what section of MPEP 708.02 the petition is intended to be based.

The petition is **DISMISSED**.

The requirements for granting special status under this section are: (A) a petition to make special; and (B) a statement explaining how the invention contributes to countering terrorism.

The petition fails to state how the invention will contribute to countering terrorism. The statement "the recorded information should increase the accountability of army personnel and police officers" is a general conclusion and does not satisfy the requirement of explaining specifically how the invention contributes to countering terrorism. Also, the invention is not fully described. A general description of the invention is all that is provided. No details of the invention and how it would counter terrorism are provided.

Furthermore, petitioner's invention, based on the disclosure, deals more with civil law enforcement and military crowd control rather than counter terrorism. MPEP 708.02 XI lists examples of types of inventions that would qualify as countering terrorism. While a grantable petition is not limited to these examples, these examples all clearly act to directly and primarily counter terrorism. The tie

to countering terrorism must be sufficient to accord special status to the application.

Any request for reconsideration must be filed within TWO MONTHS of the date of this decision. Extensions of time under 37 CFR 1.136(a) are permitted. Should petitioner desire reconsideration, he should supplement this petition by a declaration or statement giving the information as outlined above. Applicants should promptly submit a renewed petition to the Commissioner for Patents, P.O. Box 1450, Alexandria, VA 22313-1450. The envelope should indicate that the correspondence be brought to the attention of Technology Center 3600.

Until the renewed petition is submitted, the application will be returned to the examiner's docket to await treatment on the merits in the normal order of examination.

Randolph A. Reese

Randolph A. Reese
Special Programs Examiner
Technology Center 3600
(571) 272-6619

RAR/rjc 08/30/05

UNITED STATES PATENT AND TRADEMARK OFFICE

UNITED STATES DEPARTMENT OF COMMERCE
United States Patent and Trademark Office
Address: COMMISSIONER FOR PATENTS
P.O. Box 1450
Alexandria, Virginia 22313-1450
www.uspto.gov

DEAN D. SMALL
THE SMALL PATENT LAW GROUP LLP
225 S. MERAMEC, STE. 725T
ST. LOUIS, MO 63105

Mail Date: 04/20/2010

Applicant	: Snehal Chandrakant Shah	: DECISION ON REQUEST FOR
Patent Number	: 7611463	: RECALCULATION of PATENT
Issue Date	: 11/03/2009	: TERM ADJUSTMENT IN VIEW
Appliction No	: 10/975,579	: OF WYETH AND NOTICE OF INTENT TO
Filed	: 10/28/2004	: ISSUE CERTIFICATE OF CORRECTION
		:

The Request for Recalculation is **GRANTED** to the extent indicated.

The patent term adjustment has been determined to be **668** days. The USPTO will *sua sponte* issue a certificate of correction reflecting the amount of PTA days determined by the recalculation.

Prior to the issuance of the certificate of correction, the USPTO will afford patentee an opportunity to be heard and request reconsideration. Accordingly, patentee has **one month or thirty (30) days**, whichever is longer, to file a request for reconsideration of this patent term adjustment calculation. See 35 U.S.C. 154(b)(3)(B)(ii) and 37 CFR 1.322(a)(4). No extensions of time will be granted under 37 CFR 1.136.

Patentee should use document code PET.OP if electronically filing a request for reconsideration of this patent term adjustment calculation. The patentee must also include the information required by 37 CFR 1.705(b)(2) and the fee required by 37 CFR 1.18(e). If patentee does not file a timely request for reconsideration of this patent term adjustment calculation including the information required by 37 CFR 1.705(b)(2) and the fee required by 37 CFR 1.18(e), the USPTO will issue a certificate of correction reflecting the PTA determination noted above.

Patentee should be aware that in order to preserve the right to review in the United States District Court for the District of Columbia of the USPTO patent term adjustment determination, patentee must ensure that he or she also take the steps required under 35 U.S.C. 154(b)(4)(A) in a timely manner. Nothing in the request for recalculation should be construed as providing an alternative time frame for commencing a civil action under 35 U.S.C. 154(b)(4)(A).

Any questions concerning this decision should be directed to the Office of Patent Legal Administration at 571-272-7702.

UNITED STATES PATENT AND TRADEMARK OFFICE

Commissioner for Patents
United States Patent and Trademark Office
P.O. Box 1450
Alexandria, VA 22313-1450
www.uspto.gov

STEVEN WESEMAN
ASSOCIATE GENERAL COUNSEL, I.P.
CABOT MICROELECTRONICS CORPORATION
870 NORTH COMMONS DRIVE
AURORA IL 60504

COPY MAILED

NOV 28 2007

OFFICE OF PETITIONS

In re Application of	:	
Sun et al.	:	
Application No. 10/975585	:	ON PETITION
Filing or 371(c) Date: 10/28/2004	:	
Title of Invention:	:	
CMP COMPOSITION	:	
COMPRISING SURFACTANT	:	

This is a decision on the Petition and Statement to Waive Requirements Under 37 CFR 1.183, filed October 22, 2007, to waive 37 CFR 1.131 in that it requires that a declaration filed thereunder to be signed by all inventors.

The petition is **dismissed.**

Any request for reconsideration of this decision must be submitted within TWO (2) MONTHS from the mail date of this decision. Extensions of time under 37 CFR 1.136(a) are permitted. **FAILURE TO TIMELY RESPOND WILL RESULT IN ABANDONMENT OF THE APPLICATION**. The reconsideration request should include a cover letter entitled "Renewed Petition Under 37 CFR 1.183."

This application was filed on October 28, 2004, and named Tao Sun and Robert Medsker as joint inventors.

On October 9, 2007, a declaration under 37 CFR 1.131 signed by joint inventor Medsker only, was filed.

Applicant/Petitioner files the present petition and asserts that after diligent effort, he is unable to locate non-signing inventor Sun. Applicant provides that Cabot Microelectronics Corporation is the assignee of the above-referenced application. Applicant asserts that correspondence was sent by Cabot Microelectronics Corporation via U.S. mail to inventor Sun at his last known address, but was returned as undeliverable. Applicant also states that he contacted employees at Cabot Microelectronics Corporation who had contact with inventor Sun during his employment at Cabot Microelectronics Corporation; however, the employees had no knowledge of the current whereabouts of inventor Sun. Applicant asserts that these efforts demonstrate diligent effort by Cabot Microelectronics Corporation in attempting to reach inventor Sun.

Analysis

Suspension of the rules under 37 CFR 1.183 may be granted in an "extraordinary situation, when justice requires." The facts presented on the record do not adequately establish an extraordinary situation. Petitioner has not sufficiently established any special circumstances of equities that would require suspension of the rules in the interests of justice.

There is no requirement for a showing under 37 CFR 1.47, as noted above. This application bears an original Declaration executed by all joint inventors, and thus, the provisions of 37 CFR 1.47 do not apply in this instance. Nevertheless, it is appropriate to apply the principles thereof to the present situation in deciding whether this is an extraordinary situation.

Specifically, where an inventor is unavailable (cannot be reached), Applicant must establish the exercise of diligent effort in trying to find or reach the nonsigning inventor. A statement of facts should be submitted from a person with first hand knowledge of the facts relied upon that fully describes the exact facts which are relied on to establish that a diligent effort was made to locate the inventor. *See*, MPEP § 409.03(d). At the very least, an Internet search, or a search of telephone directories should be undertaken of the regions where it is suspected the non-signing inventor may reside. Copies of the results of such searches must be referred to in any renewed petition. It is important that the forthcoming communication contain statements of fact as opposed to conclusions. *See*, MPEP § 409.03(d). (Emphasis supplied).

Here, Applicant provides that correspondence was sent by Cabot Microelectronics Corporation via U.S. mail to inventor Sun at his last known address, but was returned as undeliverable. Applicant also states that he contacted employees at Cabot Microelectronics Corporation who had contact with inventor Sun during his employment at Cabot Microelectronics Corporation; however, the employees had no knowledge of the current whereabouts of inventor Sun. At the very least, an Internet search, or a search of telephone directories should be undertaken of the regions where it is suspected the non-signing inventor may reside. Copies of the results of such searches must be referred to in any renewed petition

If a more recent address is discovered for either or both of the inventors, petitioners should send the declaration to the inventor(s) at that address. If the inventor refuses orally, petitioners should

submit details of the refusal in an affidavit or declaration of facts by a person having first-hand knowledge of the refusal.

Conclusion

Applicants' showing is deficient in that proof of diligent efforts to locate inventor Sun has not been made.[2] The petition is dismissed without prejudice. Applicant should file a request for reconsideration and include the necessary statements and copies of documents.

Further correspondence with respect to this matter should be addressed as follows:

By mail: Mail Stop Petition
Director for Patents
P.O. Box 1450
Alexandria, VA 22313-1450

By FAX: (571) 273-8300
Attn: Office of Petitions

By hand: Customer Service Window
Mail Stop Petition
Randolph Building
401 Dulany Street
Alexandria, VA 22314

Telephone inquiries concerning this matter should be directed to the undersigned at (571) 272-3232.

Derek L. Woods
Attorney
Office of Petitions

[2] MPEP 409.03(d).

UNITED STATES PATENT AND TRADEMARK OFFICE

Commissioner for Patents
United States Patent and Trademark Office
P.O. Box 1450
Alexandria, VA 22313-1450
www.uspto.gov

STEVEN WESEMAN
ASSOCIATE GENERAL COUNSEL, I.P.
CABOT MICROELECTRONICS CORPORATION
870 NORTH COMMONS DRIVE
AURORA IL 60504

COPY MAILED

JAN 3 1 2008

OFFICE OF PETITIONS

In re Application of	:	
Sun et al.	:	CORRECTED DECISION
Application No. 10/975585	:	ON PETITION
Filing or 371(c) Date: 10/28/2004	:	
Title of Invention:	:	
CMP COMPOSITION	:	
COMPRISING SURFACTANT	:	

This is a decision on the Petition and Statement to Waive Requirements Under 37 CFR 1.183, filed October 22, 2007, to waive 37 CFR 1.131 in that it requires that a declaration filed thereunder to be signed by all inventors.

The petition is **dismissed.**

Any request for reconsideration of this decision must be submitted within TWO (2) MONTHS from the mail date of this decision. Extensions of time under 37 CFR 1.136(a) are permitted. The reconsideration request should include a cover letter entitled "Renewed Petition Under 37 CFR 1.183."

This application was filed on October 28, 2004, and named Tao Sun and Robert Medsker as joint inventors.

On October 9, 2007, a declaration under 37 CFR 1.131 signed by joint inventor Medsker only, was filed.

Applicant/Petitioner files the present petition and asserts that after diligent effort, he is unable to locate non-signing inventor Sun. Applicant provides that Cabot Microelectronics Corporation is the assignee of the above-referenced application. Applicant asserts that correspondence was sent

by Cabot Microelectronics Corporation via U.S. mail to inventor Sun at his last known address, but was returned as undeliverable. Applicant also states that he contacted employees at Cabot Microelectronics Corporation who had contact with inventor Sun during his employment at Cabot Microelectronics Corporation; however, the employees had no knowledge of the current whereabouts of inventor Sun. Applicant asserts that these efforts demonstrate diligent effort by Cabot Microelectronics Corporation in attempting to reach inventor Sun.

Analysis

Suspension of the rules under 37 CFR 1.183 may be granted in an "extraordinary situation, when justice requires." The facts presented on the record do not adequately establish an extraordinary situation. Petitioner has not sufficiently established any special circumstances of equities that would require suspension of the rules in the interests of justice.

There is no requirement for a showing under 37 CFR 1.47, as noted above. This application bears an original Declaration executed by all joint inventors, and thus, the provisions of 37 CFR 1.47 do not apply in this instance. Nevertheless, it is appropriate to apply the principles thereof to the present situation in deciding whether this is an extraordinary situation.

Specifically, where an inventor is unavailable (cannot be reached), Applicant must establish the exercise of diligent effort in trying to find or reach the nonsigning inventor. A statement of facts should be submitted from a person with first hand knowledge of the facts relied upon that fully describes the exact facts which are relied on to establish that a diligent effort was made to locate the inventor. *See*, MPEP § 409.03(d). At the very least, an Internet search, or a search of telephone directories should be undertaken of the regions where it is suspected the non-signing inventor may reside. Copies of the results of such searches must be referred to in any renewed petition. It is important that the forthcoming communication contain statements of fact as opposed to conclusions. *See*, MPEP § 409.03(d). (Emphasis supplied).

Here, Applicant provides that correspondence was sent by Cabot Microelectronics Corporation via U.S. mail to inventor Sun at his last known address, but was returned as undeliverable. Applicant also states that he contacted employees at Cabot Microelectronics Corporation who had contact with inventor Sun during his employment at Cabot Microelectronics Corporation; however, the employees had no knowledge of the current whereabouts of inventor Sun. At the very least, an Internet search, or a search of telephone directories should be undertaken of the regions where it is suspected the non-signing inventor may reside. Copies of the results of such searches must be referred to in any renewed petition

If a more recent address is discovered for either or both of the inventors, petitioners should send the declaration to the inventor(s) at that address. If the inventor refuses orally, petitioners should submit details of the refusal in an affidavit or declaration of facts by a person having first-hand knowledge of the refusal.

Conclusion

Applicants' showing is deficient in that proof of diligent efforts to locate inventor Sun has not been made.[2] The petition is dismissed without prejudice. Applicant should file a request for reconsideration and include the necessary statements and copies of documents.

Further correspondence with respect to this matter should be addressed as follows:

By mail: Mail Stop Petition
Director for Patents
P.O. Box 1450
Alexandria, VA 22313-1450

By FAX: (571) 273-8300
Attn: Office of Petitions

By hand: Customer Service Window
Mail Stop Petition
Randolph Building
401 Dulany Street
Alexandria, VA 22314

Telephone inquiries concerning this matter should be directed to the undersigned at (571) 272-3232.

Derek L. Woods
Attorney
Office of Petitions

[2] MPEP 409.03(d).

UNITED STATES PATENT AND TRADEMARK OFFICE

Commissioner for Patents
United States Patent and Trademark Office
P.O. Box 1450
Alexandria, VA 22313-1450
www.uspto.gov

STEVEN WESEMAN
ASSOCIATE GENERAL COUNSEL, I.P.
CABOT MICROELECTRONICS CORPORATION
870 NORTH COMMONS DRIVE
AURORA IL 60504

COPY MAILED

MAY 1 3 2008

OFFICE OF PETITIONS

In re Application of	:	
Sun et al.	:	DECISION
Application No. 10/975585	:	ON PETITION
Filing or 371(c) Date: 10/28/2004	:	
Title of Invention:	:	
CMP COMPOSITION	:	
COMPRISING SURFACTANT	:	

This Decision is in response to the "Petition and Statement to Waive Requirements Under 37 C.F.R. § 1.183," filed April 18, 2008.

The petition is **granted**.

This application was filed on October 28, 2004, and named Tao Sun and Robert Medsker as joint inventors.

On October 9, 2007, a declaration under 37 CFR 1.131 signed by joint inventor Medsker only, was filed.

Applicant/Petitioner filed a petition under 37 CFR 1.183 to waive 37 CFR 1.131 on October 22, 2007, wherein Applicant asserted that after diligent effort, Applicant was unable to locate non-signing inventor Sun. Applicant stated that Cabot Microelectronics Corporation, the assignee of the above-referenced application, sent correspondence via U.S. mail to inventor Sun at his last known address, but the correspondence was returned as undeliverable. Applicant also stated that he contacted employees at Cabot Microelectronics Corporation who had contact with inventor Sun during his employment at Cabot Microelectronics Corporation; however, the employees had no knowledge of the current whereabouts of inventor Sun. Applicant asserted that these efforts demonstrated diligent effort by Cabot Microelectronics Corporation in attempting to reach inventor Sun.

The petition was dismissed in a Decision mailed November 28, 2007, and corrected and re-mailed January 31, 2008[1]. The Decision dismissing the petition informed Applicant that

> where an inventor is unavailable (cannot be reached), Applicant must establish the exercise of diligent effort in trying to find or reach the nonsigning inventor. A statement of facts should be submitted from a person with first hand knowledge of the facts relied upon that fully describes the exact facts which are relied on to establish that a diligent effort was made to locate the inventor. *See*, MPEP § 409.03(d). At the very least, an Internet search, or a search of telephone directories should be undertaken of the regions where it is suspected the non-signing inventor may reside. Copies of the results of such searches must be referred to in any renewed petition.

Decision at p.2.

Applicant files the present renewed petition and provides that it retained the services of LaSalle Process Servers, L.P. of Chicago, IL, for the purpose of conducting a search for inventor Tao Sun.

The MPEP 715.04, Swearing back of Reference, Affidavit or Declarant Under 37 CFR 1.131, provides in relevant part

> Where one or more of the named inventors of the subject matter of the rejected claim(s) (who had originally signed the oath or declaration for patent application under 37 CFR 1.63) is now unavailable to sign an affidavit or declaration under 37 CFR 1.131, the affidavit or declaration under 37 CFR 1.131 may be signed by the remaining joint inventors provided a petition under 37 CFR 1.183 requesting waiver of the signature of the unavailable inventor be submitted with the affidavit or declaration under 37 CFR 1.131. Proof that the non-signing inventor is unavailable or cannot be found similar to the proof required for a petition under 37 CFR 1.47 must be submitted with the petition under 37 CFR 1.183 (see MPEP § 409.03(d)). Petitions under 37 CFR 1.183 are decided by the Office of Petitions (see MPEP § 1002.02(b)).

This section states that a party qualified under 37 CFR 1.42, 1.43 or 1.47 may make the affidavit when it is not possible to produce the affidavit or declaration of the inventor, and that waiver of the signature requirement of the unavailable inventor may be demonstrated by proof similar to that required in a petition under 37 CFR 1.47. In discussing waiver requirements under 37 CFR 1.183, the Office is guided by proof similar to that required when an Applicant is unavailable. In this instance, Applicant asserts that the inventors refuse to join in the Declaration.

Analysis and Conclusion

The above-identified application and papers have been reviewed and found in compliance with 37 CFR 1.47(a).

---

[1] The Decision originally set a two (2) month period for reply, and was corrected to remove the two (2) month period for reply.

Petitioner has shown that the non-signing inventor, Tao Sun, cannot be found or reached after diligent effort.

The petition is granted. The application is being referred to Technology Center Art Unit 1793 for continued examination in due course.

Telephone inquiries concerning this matter should be directed to the undersigned at (571) 272-3232.

Derek L. Woods
Attorney
Office of Petitions

UNITED STATES PATENT AND TRADEMARK OFFICE

Commissioner for Patents
United States Patent and Trademark Office
P.O. Box 1450
Alexandria, VA 22313-1450
www.uspto.gov

KUSNER & JAFFE
HIGHLAND PLACE SUITE 310
6151 WILSON MILLS ROAD
HIGHLAND HEIGHTS OH 44143

COPY MAILED

JAN 0 5 2005

OFFICE OF PETITIONS

In re Application of :
Tsai, et al. :
Application No. 10/975,602 :
Filed: October 28, 2004 :
Attorney Docket No. HK8978US :
For: MULTIFUNCTION ADAPTER

NOTICE

This is a notice regarding your November 15, 2004 (certificate of mailing date November 10, 2004) request for acceptance of a fee deficiency submission under 37 CFR 1.28(c).

On September 1, 1998, the Court of Appeals for the Federal Circuit held that 37 CFR 1.28(c) is the sole provision governing the time for correction of the erroneous payment of the issue fee as a small entity. See DH Technology v. Synergystex International, Inc. 154 F.3d 1333, 47 USPQ2d 1865 (Fed. Cir. Sept. 1, 1998).

The Office no longer investigates or rejects original or reissue applications under 37 CFR 1.56. 1098 Off. Gaz. Pat. Office 502 (January 3, 1989). Therefore, nothing in this Notice is intended to imply that an investigation was done.

Your fee deficiency submission under 37 CFR 1.28 is hereby **ACCEPTED**. Your credit card will be charged $483.00. Office records have been altered to show that you are no longer a small entity.

Inquiries related to this communication should be directed to the undersigned at (571) 272-3230.

This file is being returned to the Office of Initial Patent Examination for further processing.

E. Shirene Willis

E. Shirene Willis
Senior Petitions Attorney
Office of Petitions
Office of the Deputy Commissioner
for Patent Examination Policy

UNITED STATES PATENT AND TRADEMARK OFFICE

Commissioner for Patents
United States Patent and Trademark Office
P.O. Box 1450
Alexandria, VA 22313-1450
www.uspto.gov

S.C. JOHNSON & SON, INC.
1525 HOWE STREET
RACINE WI 53403-2236

COPY MAILED

OCT 11 2006

OFFICE OF PETITIONS

In re Application of	:	
Michaels et al.	:	
Application No. 10/975,603	:	ON PETITION
Filed: October 28, 2004	:	
Attorney Docket No. J-3951A	:	

This is a decision on the petition under 37 CFR §1.102(d), filed August 21, 2006, to make the above-identified application special. The petition requests that the above-identified application be made special under the accelerated examination procedure set forth in M.P.E.P. § 708.02, Section II: Infringement.

The petition is **GRANTED.**

A grantable petition to make an application special under 37 CFR §1.102(d) and MPEP §708.02, Section II: Infringement, must be accompanied by the required fee pursuant to 37 CFR 1.17(h) and a statement by the applicant, assignee, or attorney/agent registered to practice before the office alleging:

(A) That there is an infringing device or product actually on the market or method in use;

(B) That a rigid comparison of the alleged infringing device, product, or method with the claims of the application has been made, and that, in his or her opinion, some of the claims are unquestionably infringed; and

(C) That he or she has made or caused to be made a careful and thorough search of the prior art or has a good knowledge of the pertinent prior art.

Applicant must provide one copy of each of the references deemed most closely related to the subject matter encompassed by the claims if said references are not already of record.

The petition complies with all the above stated requirements. Accordingly, the above-identified application has been accorded "special" status.

Telephone inquires concerning this decision should be directed to the undersigned at (571) 272-3206. All other inquires concerning either the examination or status of the application should be directed to the Technology Center.

This matter is being referred to the Technology Center Art Unit 1744 for expedited prosecution.

Liana Chase Walsh
Petitions Examiner
Office of Petitions

UNITED STATES PATENT AND TRADEMARK OFFICE

UNITED STATES DEPARTMENT OF COMMERCE
United States Patent and Trademark Office
Address: COMMISSIONER FOR PATENTS
P.O. Box 1450
Alexandria, Virginia 22313-1450
www.uspto.gov

S.C. JOHNSON & SON, INC.
1525 HOWE STREET
RACINE, WI 53403-2236

Mail Date: 04/20/2010

Applicant	: Kenneth W. Michaels	: DECISION ON REQUEST FOR
Patent Number	: 7650663	: RECALCULATION of PATENT
Issue Date	: 01/26/2010	: TERM ADJUSTMENT IN VIEW
Appliction No	: 10/975,603	: OF WYETH AND NOTICE OF INTENT TO
Filed	: 10/28/2004	: ISSUE CERTIFICATE OF CORRECTION
		:

The Request for Recalculation is **GRANTED** to the extent indicated.

The patent term adjustment has been determined to be **760** days. The USPTO will *sua sponte* issue a certificate of correction reflecting the amount of PTA days determined by the recalculation.

Prior to the issuance of the certificate of correction, the USPTO will afford patentee an opportunity to be heard and request reconsideration. Accordingly, patentee has **one month or thirty (30) days**, whichever is longer, to file a request for reconsideration of this patent term adjustment calculation. See 35 U.S.C. 154(b)(3)(B)(ii) and 37 CFR 1.322(a)(4). No extensions of time will be granted under 37 CFR 1.136.

Patentee should use document code PET.OP if electronically filing a request for reconsideration of this patent term adjustment calculation. The patentee must also include the information required by 37 CFR 1.705(b)(2) and the fee required by 37 CFR 1.18(e). If patentee does not file a timely request for reconsideration of this patent term adjustment calculation including the information required by 37 CFR 1.705(b)(2) and the fee required by 37 CFR 1.18(e), the USPTO will issue a certificate of correction reflecting the PTA determination noted above.

Patentee should be aware that in order to preserve the right to review in the United States District Court for the District of Columbia of the USPTO patent term adjustment determination, patentee must ensure that he or she also take the steps required under 35 U.S.C. 154(b)(4)(A) in a timely manner. Nothing in the request for recalculation should be construed as providing an alternative time frame for commencing a civil action under 35 U.S.C. 154(b)(4)(A).

Any questions concerning this decision should be directed to the Office of Patent Legal Administration at 571-272-7702.

UNITED STATES PATENT AND TRADEMARK OFFICE

Commissioner for Patents
United States Patent and Trademark Office
P.O. Box 1450
Alexandria, VA 22313-1450
www.uspto.gov

ABB INC
LEGAL DEPARTMENT - 4U6
29801 EUCLID AVENUE
WICKLIFFE OH 44092-1832

COPY MAILED

SEP 25 2006

OFFICE OF PETITIONS

In re Application of	:	
Poorman, et al.	:	
Application No. 10/975,604	:	ON PETITION
Filed: October 28, 2004	:	
Attorney Docket No. E20040090	:	

This is a decision on the petition to revive an abandoned application under 37 CFR 1.137(b), filed May 19, 2006.

The petition under 37 CFR 1.137(b) is **GRANTED**.

The above-identified application became abandoned for failure to timely file a response to the non-final Office action mailed November 14, 2005, which set a shortened statutory period for reply of three (3) months. No reply having been received, the application became abandoned on February 15, 2006. A Notice of Abandonment was mailed on June 5, 2006.

With the instant petition, petitioner paid the petition fee, submitted the required reply in the form of an Amendment, and made the proper statement of unintentional delay.

The matter is being forwarded to Group Art Unit 2863 for consideration of the Amendment filed May 19, 2006.

Telephone inquiries related to this decision should be directed to the undersigned at (571)272-3207.

Cliff Congo
Petitions Attorney
Office of Petitions

UNITED STATES PATENT AND TRADEMARK OFFICE

UNITED STATES DEPARTMENT OF COMMERCE
United States Patent and Trademark Office
Address: COMMISSIONER FOR PATENTS
P.O. Box 1450
Alexandria, Virginia 22313-1450
www.uspto.gov

PERKINS COIE LLP/MSFT
P. O. BOX 1247
SEATTLE, WA 98111-1247

Mail Date: 04/20/2010

Applicant	: Alexandru Gavrilescu	: DECISION ON REQUEST FOR
Patent Number	: 7660899	: RECALCULATION of PATENT
Issue Date	: 02/09/2010	: TERM ADJUSTMENT IN VIEW
Appliction No	: 10/975,612	: OF WYETH AND NOTICE OF INTENT TO
Filed	: 10/28/2004	: ISSUE CERTIFICATE OF CORRECTION
		:

The Request for Recalculation is **GRANTED** to the extent indicated.

The patent term adjustment has been determined to be **274** days. The USPTO will *sua sponte* issue a certificate of correction reflecting the amount of PTA days determined by the recalculation.

Prior to the issuance of the certificate of correction, the USPTO will afford patentee an opportunity to be heard and request reconsideration. Accordingly, patentee has **one month or thirty (30) days**, whichever is longer, to file a request for reconsideration of this patent term adjustment calculation. See 35 U.S.C. 154(b)(3)(B)(ii) and 37 CFR 1.322(a)(4). No extensions of time will be granted under 37 CFR 1.136.

Patentee should use document code PET.OP if electronically filing a request for reconsideration of this patent term adjustment calculation. The patentee must also include the information required by 37 CFR 1.705(b)(2) and the fee required by 37 CFR 1.18(e). If patentee does not file a timely request for reconsideration of this patent term adjustment calculation including the information required by 37 CFR 1.705(b)(2) and the fee required by 37 CFR 1.18(e), the USPTO will issue a certificate of correction reflecting the PTA determination noted above.

Patentee should be aware that in order to preserve the right to review in the United States District Court for the District of Columbia of the USPTO patent term adjustment determination, patentee must ensure that he or she also take the steps required under 35 U.S.C. 154(b)(4)(A) in a timely manner. Nothing in the request for recalculation should be construed as providing an alternative time frame for commencing a civil action under 35 U.S.C. 154(b)(4)(A).

Any questions concerning this decision should be directed to the Office of Patent Legal Administration at 571-272-7702.

UNITED STATES PATENT AND TRADEMARK OFFICE

COMMISSIONER FOR PATENTS
UNITED STATES PATENT AND TRADEMARK OFFICE
P.O. BOX 1450
ALEXANDRIA, VA 22313-1450
www.uspto.gov

JJGJR.: 03-05

Paper No. __

JERRY RICHARD POTTS
3248 VIA RIBERA
ESCONDIDO CA 92029

COPY MAILED
MAR 07 2005
OFFICE OF PETITIONS

In re Application of	:	
Brown, et al.	:	
Application No. 10/975,639	:	DECISION ON PETITION
Filed: 24 January, 2005	:	
Attorney Docket No. 803102-1	:	

This is a decision on the petition under 37 C.F.R. §1.53 and §1.182, filed on 24 January, 2005, requesting that the application be given the filing date of the submission of Fig. 3, *i.e.*, 24 January, 2005, rather than the presently accorded date of 28 October, 2004, without Fig. 3.

The petition is **GRANTED**.

The application was deposited on 28 October, 2004.

On 10 December, 2004, the Office of Initial Patent Examination (OIPE) mailed a "Notice to File Corrected Application Papers" and therein indicated, *inter alia*, that Fig. 3 as described in the specification appeared to be omitted from the application. The Notice informed Petitioner that the alternatives available were to: (a) petition contending that the application was deposited with the drawings; (b) file the drawings and accept their deposit date as the filing date of the application; or (c) prosecute the application as deposited on 28 October, 2004.

On 24 January, 2005, Petitioner replied to the Notice, *inter alia*, with the instant petition along

with a copy of Fig. 3, and elected "that this application be afforded a filing dated (sic) that the missing items are received in the United States Patent and Trademark Office."

The petition is **granted**.

The application is being forwarded to OIPE for further processing with a filing date of 24 January, 2005, using:

- **pages 1 - 32 of the specification (description, claims, abstract) and Figs. 1 - 2 and 4 - 46 of the 37 sheets of drawings deposited on 28 October, 2004; and**
- **Fig. 3 deposited on 24 January, 2005; and**

with direction to OIPE to correct Office records and provide to Petitioner a corrected filing receipt setting forth a filing date of 24 January, 2005, and reflecting therein that 32 pages of specification (description, claims and abstract) and 38 sheets of formal drawings (Figs. 1 -2, Fig. 3, and Figs. 4 - 46) were present on filing.

Telephone inquiries specific to this matter should be directed to the undersigned at (571) 272-3214.

John J. Gillon, Jr.
Senior Attorney
Office of Petitions

UNITED STATES PATENT AND TRADEMARK OFFICE

Commissioner for Patents
United States Patent and Trademark Office
P.O. Box 1450
Alexandria, VA 22313-1450
www.uspto.gov

MAIL

JUN 0 2 2005

DIRECTOR OFFICE
TECHNOLOGY CENTER 2100

Mattingly, Stanger & Malur, P.C.
1800 Diagonal Rd., Suite 370
Alexandria, Virginia 22314

In re Application of: Takahashi, et al.
Application No. 10/975,645
Filed: 29 October 2004
For: STORAGE SYSTEM AND DATA RELOCATION CONTROL DEVICE

DECISION ON PETITION FOR ACCELERATED EXAMINATION UNDER M.P.E.P.§708.02(VIII)

This is a decision on the petition filed 7 March 2005 under 37 C.F.R. 102(d) and M.P.E.P. § 708.02(VIII): Accelerated Examination, to make the above-identified application special.

The Petition is **GRANTED**.

M.P.E.P. § 708.02, Section VIII which sets out the prerequisites for a grantable petition for Accelerated Examination under 37 C.F.R. § 102(d) states in relevant part:

A new application (one which has not received any examination by the examiner) may be granted special status provided that applicant (and this term includes applicant's attorney or agent) complies with each of the following items:

(a) Submits a petition to make special accompanied by the fee set forth in 37 CFR 1.17(h);

(b) Presents all claims directed to a single invention, or if the Office determines that all the claims presented are not obviously directed to a single invention, will make an election without traverse as a prerequisite to the grant of special status;

(c) Submits a statement(s) that a pre-examination search was made, listing the field of search by class and subclass, publication, Chemical Abstracts, foreign patents, etc. The pre-examination search must be directed to the invention as claimed in the application for which special status is requested. A search made by a foreign patent office satisfies this requirement;

(d) Submits one copy each of the references deemed most closely related to the subject matter encompassed by the claims if said references are not already of record; and

(e) Submits a detailed discussion of the references, which discussion points out, with the particularity required by 37 CFR 1.111 (b) and (c), how the claimed subject matter is patentable over the references.

Petition to Make Special **GRANTED** since all of the requirements for special status under MPEP § 708.02(VIII) have been met.

The application file is being forwarded to the Examiner for accelerated examination in accordance with the procedures set forth in M.P.E.P. §708.02, Section VIII. If the application is subsequently allowed, it will be given priority for printing. See M.P.E.P. §1309.

for

Vincent Trans
Special Program Examiner
Technology Center 2100
Computer Architecture, Software and Information Security
571-272-3613

5/25/05

GO

UNITED STATES PATENT AND TRADEMARK OFFICE

UNITED STATES DEPARTMENT OF COMMERCE
United States Patent and Trademark Office
Address: COMMISSIONER FOR PATENTS
P.O. Box 1450
Alexandria, Virginia 22313-1450
www.uspto.gov

FITCH EVEN TABIN & FLANNERY
120 SOUTH LASALLE STREET
SUITE 1600
CHICAGO, IL 60603-3406

Mail Date: 04/21/2010

Applicant	: Barry L. Atkins	: DECISION ON REQUEST FOR
Patent Number	: 7656308	: RECALCULATION of PATENT
Issue Date	: 02/02/2010	: TERM ADJUSTMENT IN VIEW
Appliction No	: 10/975,652	: OF WYETH AND NOTICE OF INTENT TO
Filed	: 10/28/2004	: ISSUE CERTIFICATE OF CORRECTION
		:

The Request for Recalculation is **GRANTED** to the extent indicated.

The patent term adjustment has been determined to be **583** days. The USPTO will *sua sponte* issue a certificate of correction reflecting the amount of PTA days determined by the recalculation.

Prior to the issuance of the certificate of correction, the USPTO will afford patentee an opportunity to be heard and request reconsideration. Accordingly, patentee has **one month or thirty (30) days**, whichever is longer, to file a request for reconsideration of this patent term adjustment calculation. See 35 U.S.C. 154(b)(3)(B)(ii) and 37 CFR 1.322(a)(4). No extensions of time will be granted under 37 CFR 1.136.

Patentee should use document code PET.OP if electronically filing a request for reconsideration of this patent term adjustment calculation. The patentee must also include the information required by 37 CFR 1.705(b)(2) and the fee required by 37 CFR 1.18(e). If patentee does not file a timely request for reconsideration of this patent term adjustment calculation including the information required by 37 CFR 1.705(b)(2) and the fee required by 37 CFR 1.18(e), the USPTO will issue a certificate of correction reflecting the PTA determination noted above.

Patentee should be aware that in order to preserve the right to review in the United States District Court for the District of Columbia of the USPTO patent term adjustment determination, patentee must ensure that he or she also take the steps required under 35 U.S.C. 154(b)(4)(A) in a timely manner. Nothing in the request for recalculation should be construed as providing an alternative time frame for commencing a civil action under 35 U.S.C. 154(b)(4)(A).

Any questions concerning this decision should be directed to the Office of Patent Legal Administration at 571-272-7702.

UNITED STATES PATENT AND TRADEMARK OFFICE

Commissioner for Patents
United States Patent and Trademark Office
P.O. Box 1450
Alexandria, VA 22313-1450
www.uspto.gov

LEXMARK INTERNATIONAL, INC.
INTELLECTUAL PROPERTY LAW DEPT.
740 WEST NEW CIRCLE ROAD, BLDG. 082-1
LEXINGTON KY 40550-0999

MAILED

JAN 29 2010

OFFICE OF PETITIONS

In re Application of	:	
Chengwu CUI, et al	:	
Application No. 10/975,653	:	DECISION ON PETITION
Filed: October 28, 2004	:	
Attorney Docket No. 2002-0847.01	:	

This is a decision on the petition under the unintentional provisions of 37 CFR 1.137(b), filed December 7, 2009, to revive the above-identified application.

The petition is **GRANTED**.

The application became abandoned for failure to timely pay the issue and publication fees on or before September 11, 2009, as required by the Notice of Allowance and Fee(s) Due, mailed June 11, 2009, which set a statutory period for reply of three (3) months. Accordingly, the application became abandoned on September 12, 2009.

The petition satisfies the requirements of 37 CFR 1.137(b) in that petitioner has supplied (1) the reply in the form of payment of the Issue Fee of $1510 and Publication Fee of $300; (2) the petition fee of $1620; and (3) an adequate statement of unintentional delay.

37 CFR 1.137(b)(3) requires a statement that "the entire delay in filing the required reply from the due date for the reply until the filing of a grantable petition pursuant to 37 CFR 1.137(b) was unintentional." Since the statement appearing in the petition varies from the language required by 37 CFR 1.137(b)(3), the statement is being construed as the required statement. Petitioner must notify the Office if this is **not** a correct reading of the statement appearing in the petition.

There is no indication that the person signing the petition was ever given a power of attorney to prosecute the application. If the person signing the petition desires to receive future correspondence regarding this application, the appropriate power of attorney document must be submitted.

Telephone inquiries concerning this decision should be directed to the undersigned at (571) 272-6735.

The application is being referred to the Office of Data Management for processing into a patent.

/DCG/
Diane C. Goodwyn
Petitions Examiner
Office of Petitions

UNITED STATES PATENT AND TRADEMARK OFFICE

UNITED STATES DEPARTMENT OF COMMERCE
United States Patent and Trademark Office
Address: COMMISSIONER FOR PATENTS
P.O. Box 1450
Alexandria, Virginia 22313-1450
www.uspto.gov

FROMMER LAWRENCE & HAUG
745 FIFTH AVENUE- 10TH FL.
NEW YORK, NY 10151

Mail Date: 04/21/2010

Applicant	: Jochen Wurtz	: DECISION ON REQUEST FOR
Patent Number	: 7615232	: RECALCULATION of PATENT
Issue Date	: 11/10/2009	: TERM ADJUSTMENT IN VIEW
Appliction No	: 10/975,660	: OF WYETH AND NOTICE OF INTENT TO
Filed	: 10/28/2004	: ISSUE CERTIFICATE OF CORRECTION
		:

The Request for Recalculation is **GRANTED** to the extent indicated.

The patent term adjustment has been determined to be **0** days. The USPTO will *sua sponte* issue a certificate of correction reflecting the amount of PTA days determined by the recalculation.

Prior to the issuance of the certificate of correction, the USPTO will afford patentee an opportunity to be heard and request reconsideration. Accordingly, patentee has **one month or thirty (30) days**, whichever is longer, to file a request for reconsideration of this patent term adjustment calculation. See 35 U.S.C. 154(b)(3)(B)(ii) and 37 CFR 1.322(a)(4). No extensions of time will be granted under 37 CFR 1.136.

Patentee should use document code PET.OP if electronically filing a request for reconsideration of this patent term adjustment calculation. The patentee must also include the information required by 37 CFR 1.705(b)(2) and the fee required by 37 CFR 1.18(e). If patentee does not file a timely request for reconsideration of this patent term adjustment calculation including the information required by 37 CFR 1.705(b)(2) and the fee required by 37 CFR 1.18(e), the USPTO will issue a certificate of correction reflecting the PTA determination noted above.

Patentee should be aware that in order to preserve the right to review in the United States District Court for the District of Columbia of the USPTO patent term adjustment determination, patentee must ensure that he or she also take the steps required under 35 U.S.C. 154(b)(4)(A) in a timely manner. Nothing in the request for recalculation should be construed as providing an alternative time frame for commencing a civil action under 35 U.S.C. 154(b)(4)(A).

Any questions concerning this decision should be directed to the Office of Patent Legal Administration at 571-272-7702.

PTO/SB/83 (01-06)
Approved for use through 12/31/2008. OMB 0651-0035
U.S. Patent and Trademark Office, U.S. DEPARTMENT OF COMMERCE
Under the Paperwork Reduction Act of 1995, no persons are required to respond to a collection of information unless it displays a valid OMB control number.

REQUEST FOR WITHDRAWAL AS ATTORNEY OR AGENT AND CHANGE OF CORRESPONDENCE ADDRESS

Application Number	10/975,662
Filing Date	October 28, 2004
First Named Inventor	Apostolos Katefidis
Art Unit	1764
Examiner Name	Merkling, Matthew J.
Attorney Docket Number	SHN-116-A

To: Commissioner for Patents
P.O. Box 1450
Alexandria, VA 22313-1450

Approved 1-2-08
Jacqueline M. Stone, Director
Technology Center 1700

Please withdraw me as attorney or agent for the above identified patent application, and

- [x] all the attorneys/agents of record.
- [ ] the attorneys/agents (with registration numbers) listed on the attached paper(s), or
- [ ] the attorneys/agents associated with Customer Number

NOTE: This box can only be checked when the power of attorney of record in the application is to all the practitioners associated with a customer number.

The reasons for this request are:

Due to conflict , client is requesting that we transfer files to a new firm.

CORRESPONDENCE ADDRESS

1. [ ] The correspondence address is NOT affected by this withdrawal.
2. [ ] Change the correspondence address and direct all future correspondence to:

[ ] The address associated with Customer Number:

OR

[x] Firm *or* Individual Name	Law Offices, Factor & Lake, Ltd.				
Address	1327 W. Washington Blvd. Suite 5G/H				
City	Chicago	State	Illinois	Zip	60607-1912
Country	United States				
Telephone	(312) 226-1818	Email	jfactor@factor-lake.com		
Signature					
Name	Andrew R. Basile, Sr.	Registration No.	24,753		
Date	September 27, 2007	Telephone No.	(248) 649-3333		

NOTE: Withdrawal is effective when approved rather than when received. Unless there are at least 30 days between approval of withdrawal and the expiration date of a time period for response or possible extension period, the request to withdraw is normally disapproved.

This collection of information is required by 37 CFR 1.36. The information is required to obtain or retain a benefit by the public which is to file (and by the USPTO to process) an application. Confidentiality is governed by 35 U.S.C. 122 and 37 CFR 1.11 and 1.14. This collection is estimated to take 12 minutes to complete, including gathering, preparing, and submitting the completed application form to the USPTO. Time will vary depending upon the individual case. Any comments on the amount of time you require to complete this form and/or suggestions for reducing this burden, should be sent to the Chief Information Officer, U.S. Patent and Trademark Office, U.S. Department of Commerce, P.O. Box 1450, Alexandria, VA 22313-1450. DO NOT SEND FEES OR COMPLETED FORMS TO THIS ADDRESS. SEND TO: **Commissioner for Patents, P.O. Box 1450, Alexandria, VA 22313-1450.**

If you need assistance in completing the form, call 1-800-PTO-9199 and select option 2.

UNITED STATES PATENT AND TRADEMARK OFFICE

Commissioner for Patents
United States Patent and Trademark Office
P.O. Box 1450
Alexandria, VA 22313-1450
www.uspto.gov

CHRISTENSEN, O'CONNOR, JOHNSON, KINDNESS, PLLC
1420 FIFTH AVENUE
SUITE 2800
SEATTLE, WA 98101-2347

MAILED

OCT 27 2009

OFFICE OF PETITIONS

In re Application of
Christopher J. Corbett, et al.
Application No. 10/975,666
Filed: October 28, 2004
Attorney Docket No. 307335.04/MSFTI123771

ON PETITION

This is a decision on the petition under 37 CFR 1.137(b), filed July 23, 2009, to revive the above-identified application.

The petition is **GRANTED**.

The application became abandoned for failure to timely file a reply within the meaning of 37 CFR 1.113 to a final Office action mailed November 17, 2008. A Notice of Abandonment was mailed on May 26, 2009. On June 23, 2009, the present petition was filed.

The petition is not signed by a registered patent attorney or patent agent of record. However, in accordance with 37 CFR 1.34, the signature of MacLane C. Key appearing on the correspondence shall constitute a representation to the United States Patent and Trademark Office that he is authorized to represent the particular party on whose behalf he acts. If, Mr. Key desires to receive correspondence regarding this file, the appropriate power of attorney documents must be submitted. A courtesy copy of this decision is being mailed to the petitioner herein. However, all future correspondence regarding this application file will be directed solely to the above-noted correspondence address of record.

The proposed reply required for consideration of a petition to revive must be a Notice of Appeal (and appeal fee required by 37 CFR 41.20(b)(2), an amendment that *prima facie* places the application in condition for allowance, a Request for Continued Examination and submission (37 CFR 1.114), or the filing of a continuing application under 37 CFR 1.53(b). See MPEP 711.03(c)(II)(A)(2).

The petition satisfies the requirements of 37 CFR 1.137(b) in that petitioner has supplied (1) the reply in the form of a Request for Continued Examination (RCE), including the fee of $810 and

the submission required by 37 CFR 1.114; (2) the petition fee of $1,620; and (3) an adequate statement of unintentional delay[1].

This application is being referred to Technology Center AU 2182 for processing of the RCE and for appropriate action by the Examiner in the normal course of business on the amendment submitted in accordance with 37 CFR 1.114.

Telephone inquiries concerning this decision should be directed to the undersigned at (571) 272-3204. Inquiries relating to further prosecution should be directed to the Technology Center.

Sherry D. Brinkley
Petitions Examiner
Office of Petitions

cc: MAC LANE C. KEY
MICROSOFT CORPORATION
ONE MICROSOFT WAY
REDMOND, WA 98052

[1] 37 CFR 1.137(b)(3) requires a statement that the entire delay in filing the required reply from the due date for the reply until the filing of a grantable petition pursuant to 37 CFR 1.137(b) was unintentional. While the statement is not made by an attorney of record, such statement is being treated as having been made as the result of a reasonable inquiry into the facts and circumstances of such delay. See 37 CFR 10.18(b) and Changes to Patent Practice and Procedure; Final Rule Notice, 62 Fed. Reg. 53131, 53178 (October 10, 1997), 1203 Off. Gaz. Pat. Office 63, 103 (October 21, 1997). In the event that such an inquiry has not been made, petitioner must make such an inquiry. If such inquiry results in the discovery that it is not correct that the entire delay in filing the required reply from the due date for the reply until the filing of a grantable petition pursuant to 37 CFR 1.137(b) was unintentional, petitioner must notify the Office.

UNITED STATES PATENT AND TRADEMARK OFFICE

Commissioner for Patents
United States Patent and Trademark Office
P.O. Box 1450
Alexandria, VA 22313-1450
www.uspto.gov

Texas Instruments Incorporated
P.O. Box 655474, M/S 3999
Dallas, TX 75265

COPY MAILED

MAY 15 2007

OFFICE OF PETITIONS

In re Application of:
Martin Braier
Application No.: 10/975,686
Filed: October 27, 2004
Atty's Docket No.: TI-37253

DECISION ON PETITION UNDER
37 CFR 1.137(b)

This is a decision on the petition for revival of the above-entitled application under 37 CFR 1.137(b), filed October 03, 2006.

The petition is **GRANTED**.

The above-identified application became abandoned for failure to submit the issue and publication fees in a timely manner in reply to the Notice Of Allowance mailed June 13, 2006, which set a statutory period for reply of three (3) months. Accordingly, the above-identified application became abandoned at midnight on September 13, 2006.

On October 03, 2006, applicant filed the petition for revival under 37 CFR 1.137(b) considered herein. The petition satisfies the conditions for revival pursuant to the provisions of 37 CFR 1.137(b) in that it includes: (1) the petition fee; (2) the required statement of unintentional delay; and (3) the required reply in the form of payment of the issue and publication fees. Accordingly, the issue and publication fee payments are accepted as having been unintentionally delayed.

The application is being referred to the Office Of Publications.

Telephone inquiries concerning this decision should be directed to the undersigned.

Derek A. Putonen
Attorney Advisor
(571) 272-3294

UNITED STATES PATENT AND TRADEMARK OFFICE

Commissioner for Patents
United States Patent and Trademark Office
P.O. Box 1450
Alexandria, VA 22313-1450
www.uspto.gov

OWENS-ILLINOIS, INC.
ONE MICHAEL OWENS WAY, THREE O-I PLAZA
PERRYSBURG OH 43551-2999

COPY MAILED

OCT 14 2008

OFFICE OF PETITIONS

In re Application of	:	
Philip J. Robinson	:	
Application No. 10/975689	:	DECISION ON
Filing or 371(c) Date: 10/27/2004	:	PETITION
Attorney Docket Number: 18482 USA	:	

This is a decision in response to the "Petition to Withdraw Holding of Abandonment," filed November 19, 2007.

This Petition is hereby **dismissed**.

Any further petition must be submitted within TWO (2) MONTHS from the mail date of this decision. Extensions of time under 37 CFR 1.136(a) are permitted. The reconsideration request should include a cover letter entitled "Renewed Petition under 37 CFR 1.181." This is **not** final agency action within the meaning of 5 U.S.C. § 704.

Background

The above-identified application became abandoned for failure to timely and properly reply to the Notice of Allowance and Issue Fee Due, mailed July 12, 2007. The Notice set a non-extendable three (3) month period for reply.

Applicant submitted an Issue Fee Transmittal Form (PTOL-85B), authorizing this Office to charge Applicant's deposit account the issue fee, the fee for the advance order of four (4) additional copies, and any deficiency, on July 30, 2007.

This Office attempted to charge the fees to Applicant's deposit account on July 31, 2007; however, there were insufficient funds in the deposit account. As such, the reply was not a complete and proper reply to the Notice.

No complete and proper reply having been received, the application became abandoned on October 13, 2007. A Notice of Abandonment was mailed November 7, 2007.

The present petition

Applicant files the present petition and asserts that the issue and publication fees were timely filed.

Analysis and conclusion

As noted above, the Office attempted to charge the fees to Applicant's deposit account on July 31, 2007; however, there were insufficient funds in the deposit account. As such, the reply was not a complete and proper reply to the Notice. The application is abandoned.

Further correspondence with respect to this matter should be addressed as follows:

By mail:	Commissioner for Patents PO Box 1450 Alexandria, VA 22313-1450
By FAX:	(571) 273-8300 Attn: Office of Petitions
By hand:	Customer Service Window Randolph Building 401 Dulany Street Alexandria, VA 22314

Telephone inquiries concerning this matter should be directed to the undersigned at (571) 272-3232.

/Derek L. Woods/
Derek L. Woods
Attorney
Office of Petitions

UNITED STATES PATENT AND TRADEMARK OFFICE

Commissioner for Patents
United States Patent and Trademark Office
P.O. Box 1450
Alexandria, VA 22313-1450
www.uspto.gov

OWENS-ILLINOIS, INC.
ONE MICHAEL OWENS WAY, THREE O-I PLAZA
PERRYSBURG OH 43551-2999

COPY MAILED

OCT 14 2008

OFFICE OF PETITIONS

In re Application of	:	
Philip J. Robinson	:	
Application No. 10/975689	:	DECISION ON
Filing or 371(c) Date: 10/27/2004	:	PETITION
Attorney Docket Number: 18482 USA	:	

The above-identified application became abandoned for failure to timely and properly reply to the Notice of Allowance and Issue Fee Due, mailed. The Notice set a non-extendable three (3) month period for reply.

The petition is **GRANTED**.

This application became abandoned for failure to timely pay the issue and publication fees on or before October 12, 2007, as required by the Notice of Allowance and Fee(s) Due, mailed July 12, 2007. Accordingly, the date of abandonment of this application is October 13, 2007.

The petition satisfies the requirements of 37 CFR 1.137(b) in that petitioner has supplied (1) the reply in the form of payment of the issue fee and the publication fee; (2) the petition fee; and (3) a proper statement of unintentional delay.

Telephone inquiries concerning this matter should be directed to the undersigned at (571) 272-3232.

This application is being referred to the Office of Data Management for processing into a patent.

/Derek L. Woods/
Derek L. Woods
Attorney
Office of Petitions

UNITED STATES PATENT AND TRADEMARK OFFICE

Commissioner for Patents
United States Patent and Trademark Office
P.O. Box 1450
Alexandria, VA 22313-1450
www.uspto.gov

SALIWANCHIK LLOYD & SALIWANCHIK
A PROFESSIONAL ASSOCIATION
PO BOX 142950
GAINESVILLE FL 32614-2950

COPY MAILED

SEP 0 2 2005

OFFICE OF PETITIONS

In re Application of
Tanya Kaye Murphy et al.
Application No. 10/975,701
Filed: October 28, 2004
Attorney Docket No. UF-392X

: DECISION NOTING JOINDER OF
: INVENTOR AND PETITION UNDER
: **37 CFR 1.47(a) DISMISSED** AS
: INVOLVING MOOT ISSUES

A petition under 37 CFR 1.47(a) was filed July 20, 2005 (certificate of mail date, July 18, 2005) and was dismissed in a decision mailed August 3, 2005.

Papers filed on August 17, 2005, in reply to the "Decision Refusing Status Under 37 CFR 1.47(a)" mailed August 3, 2005, included a declaration signed by the previously non-signing inventor, Mary Catherine Lessig, in compliance with 37 CFR 1.63.

In view of the joinder of the inventor, further consideration under 37 CFR 1.47(a) is unnecessary.

The renewed petition filed August 17, 2005 is **DISMISSED** as involving moot issues.

This application does not have any rule 1.47(a) status and no such status should appear on the file wrapper. This application need not be returned to this office for any further consideration under 37 CFR 1.47(a).

This matter will be referred to Technology Center 1616 and examination of the application will occur in due course.

Telephone inquiries related to this decision should be directed to the undersigned Petitions Attorney at (571) 272-3212.

Patricia Faison-Ball

Patricia Faison-Ball
Senior Petitions Attorney
Office of Petitions

SPE RESPONSE FOR CERTIFICATE OF CORRECTION

Paper No.: _____

DATE : 11/19/09

TO SPE OF : ART UNIT 1646
SUBJECT : Request for Certificate of Correction for Appl. No 10/975,708.: 7,166285

Please respond to this request for a certificate of correction within 7 days.

FOR IFW FILES:

Please review the requested changes/corrections as shown in the **COCIN** document(s) in the IFW application image. No new matter should be introduced, nor should the scope or meaning of the claims be changed.

Please complete the response (see below) and forward the completed response to scanning using document code **COCX**.

FOR PAPER FILES:

Please review the requested changes/corrections as shown in the attached certificate of correction. Please complete this form (see below) and forward it with the file to:

Certificates of Correction Branch (CofC)

Should the change(s) Be made?

RoChaun Johnson
Certificates of Correction Branch
571 272-0470

Thank You For Your Assistance

The request for issuing the above-identified correction(s) is hereby:
Note your decision on the appropriate box.

xApproved	**All** changes apply.
☐ **Approved in Part**	Specify below which changes **do not** apply.
☐ **Denied**	State the reasons for denial below.

Comments: OK to enter the correct sequence listing

/Prema Mertz/

11/19/09

SPE **Art Unit**

UNITED STATES PATENT AND TRADEMARK OFFICE

Commissioner for Patents
United States Patent and Trademark Office
P.O. Box 1450
Alexandria, VA 22313-1450
www.uspto.gov

MAY 23 2005

JEFFREY J. SCHWARTZ
SCHWARTZ LAW FIRM, P.C.
SOUTHPARK TOWERS
6100 FAIRVIEW ROAD
SUITE 530
CHARLOTTE, NORTH CAROLINA 28210

In re Application of	:
W. Patrick Burgess	:
Serial No.: 10/975,741	: PETITION TO MAKE SPECIAL
Filed: October 28 2004	:
Attorney Docket No: 247/1B	:

This is in response to applicant's petition filed October 28, 2004, to make the above-identified application special under the provisions of 37 C.F.R. 1.102(d) and M.P.E.P. § 708.02, VIII (herein as "sub-section VIII."). The delay in acting on this petition is regretted.

According to sub-section VIII, the granting of special status to an application is predicated on parts (A) through (E):

- Part A requires the petition to make special is accompanied by the fees set forth in 37 C.F.R. 1.17(h);

- Part B requires the claims in the Application to be directed to a single invention, or if the Office determines the Application is directed to more than one invention, then the Applicant is required as a prerequisite to make an election without traverse in order to maintain the special status;

- Part C requires statement by that applicant that a pre-examination search was made, listing the field of search " by class, and subclass, publication, Chemical Abstracts, foreign patents, etc.";

- Part D requires a submission of one copy of each reference most closely related to the subject matter encompassed by the claims, as long as those references are not already "of record." ; and

- Part E requires a "detailed discussion of the references, which discussion points out, with particularity required by 37 C.F.R. 1.111 (b) and (c), how the claimed subject matter is patentable over the references.

According to applicant's petition, page 1, the Application is directed to a single invention. This may satisfy the requirements of Part B of sub-section VIII if the claims are, in fact, found to be directed to a single invention. If the Examiner deems the Application is directed to more than one invention, the applicant will have to make an election without traverse or any special status granted to the Application will be withdrawn.

The applicant has included brief information regarding a pre-examination search, as required by Part C of sub-section VIII, indicating that the "most relevant prior art was located in U.S. Classes 424 and 514." Petition, page 1.

The petition, on pages 3, lists five U.S. patents the applicant asserted as the most relevant art. The U.S. Patent numbers are as follows: US 3,993,750; US 4,289,750; US 4,405,596; US 4,663,166; and US 5,112,622. The applicant then, on pages 3-5, extrapolates some of the differences between the cited material and the instant Application. This satisfies Parts D and E of sub-section VIII.

With respect to Part A of sub-section VIII, the appropriate fees necessary to make the petition special, with respect to 37 C.F.R. 1.17(h), the check for $130.00 was credited to Applicant's account on November 1, 2004.

The petition is therefore **GRANTED**.

The application will be forwarded to the Art unit for assignment to an examiner and for action commensurate with the Application's SPECIAL status.

Should there be any questions with regard to this letter please contact Jean F. Vollano by letter addressed to the Director, Technology Center 1600, PO BOX 1450, ALEXANDRIA, VA 22313-1450, or by telephone at 571-272-0648 or by facsimile transmission to the general Office facsimile number 703-872-9306.

Jean F Vollano

Jean F. Vollano
Special Program Examiner
Technology Center 1600

UNITED STATES PATENT AND TRADEMARK OFFICE

Commissioner for Patents
United States Patent and Trademark Office
P.O. Box 1450
Alexandria, VA 22313-1450
www.uspto.gov

BARNES & THORNBURG LLP
P.O. BOX 2786
CHICAGO, IL 60690-2786

COPY MAILED

MAR 21 2008

OFFICE OF PETITIONS

In re Application of	:	
Kelly WALKER	:	
Application No. 10/975,754	:	DECISION ON PETITION
Filed: October 28, 2004	:	TO WITHDRAW
Attorney Docket No. 10479P00010US	:	FROM RECORD
	:	

This is a decision on the Request to Withdraw as attorney or agent of record under 37 C.F.R. § 1.36(b), filed February 8, 2008.

The request is **DISMISSED** as moot.

A review of the file record indicates that the power of attorney to Barnes & Thornburg, LLP, has been revoked by the assignee of the patent application on February 15, 2008. Accordingly, the request to withdraw under 37 C.F.R. § 1.36(b) is moot.

Future correspondence from the Office will be mailed to the new address of record.

Telephone inquires concerning this decision should be directed to undersigned at 571-272- 6735.

Diane Goodwyn
Petitions Examiner
Office of Petitions

UNITED STATES PATENT AND TRADEMARK OFFICE

Commissioner for Patents
United States Patent and Trademark Office
P.O. Box 1450
Alexandria, VA 22313-1450
www.uspto.gov

LAW OFFICES OF ROY ANDERSON
3541 OCEAN VIEW BLVD
GLENDALE CA 91208

COPY MAILED

OCT 23 2006

OFFICE OF PETITIONS

In re Application of	:	
WONG	:	
Application No. 10/975,775	:	DECISION ON PETITION
Filed: October 28, 2004	:	TO MAKE SPECIAL UNDER
Attorney Docket No. RLA35.113	:	37 CFR 1.102(c)(1)
	:	

This is a decision on the petition under 37 CFR 1.102(c)(1), filed September 7, 2006, to make the above-identified application special based on applicant's age as set forth in M.P.E.P. § 708.02, Section IV.

The petition is **GRANTED**.

A grantable petition to make an application special under 37 CFR 1.102(c)(1) and MPEP § 708.02, Section IV: Applicant's Age, must be accompanied by evidence showing that at least one of the applicants is 65 years of age, or more, such as a birth certificate or a statement by applicant. No fee is required.

The instant petition includes an affidavit from Jacob Y. Wong attesting to his age. Accordingly, the above-identified application has been accorded "special" status.

Telephone inquiries concerning this decision should be directed to Monica A. Graves at 571-272-7253.

All other inquiries concerning either the examination or status of the application should be directed to the Technology Center.

The application is being forwarded to the Technology Center Art Unit 3714 for action on the merits commensurate with this decision.

David Bucci
Petitions Examiner
Office of Petitions

UNITED STATES PATENT AND TRADEMARK OFFICE

Commissioner for Patents
United States Patent and Trademark Office
P.O. Box 1450
Alexandria, VA 22313-1450
www.uspto.gov

BUSKOP LAW GROUP, P.C.
1776 YORKTOWN
SUITE 550
HOUSTON, TX 77056

COPY MAILED

NOV 30 2006

OFFICE OF PETITIONS

In re Application of	:	
Paul Craig Mellinger et al	:	
Application No. 10/975,776	:	DECISION ON PETITION
Filed: October 28, 2004	:	TO MAKE SPECIAL UNDER
Attorney Docket No. 1078.17A	:	37 CFR 1.102(c)(1)
	:	

This is a decision on the petition under 37 CFR 1.102(c)(1), filed June 26, 2006, to make the above-identified application special based on applicant's age as set forth in M.P.E.P. § 708.02, Section IV.

The petition is **GRANTED**.

A grantable petition to make an application special under 37 CFR 1.102(c)(1) and MPEP § 708.02, Section IV: Applicant's Age must be accompanied by evidence showing that at least one of the applicants is 65 years of age, or more, such as a birth certificate or a statement by applicant. No fee is required

The instant petition includes a copy of Inventor Melvyn Wayne Mellinger's passport showing that he is over 65 years of age. Accordingly, the above-identified application has been accorded "special" status.

Telephone inquiries concerning this decision should be directed to Irvin Dingle at 571-272-3210.

All other inquiries concerning either the examination or status of the application should be directed to the Technology Center.

The application is being forwarded to the Technology Center Art Unit 3754 for action on the merits commensurate with this decision.

Irvin Dingle
Petitions Examiner
Office of Petitions

UNITED STATES PATENT AND TRADEMARK OFFICE

COMMISSIONER FOR PATENTS
UNITED STATES PATENT AND TRADEMARK OFFICE
P.O. BOX 1450
ALEXANDRIA, VA 22313-1450
www.uspto.gov

Vista IP Law Group LLP
2040 MAIN STREET, 9TH FLOOR
IRVINE, CA 92614

COPY MAILED
AUG 14 2006
OFFICE OF PETITIONS

In re Application of :
Pieroni : DECISION ON PETITION
Application No. 10/975,781 :
Filed: October 28, 2004 :
Docket No.: RED-101 :

This is a decision on the petition under 37 C.F.R. § 1.137(b), filed July 7, 2006, to revive the above-identified application.

The petition is **GRANTED**.

This application became abandoned October 21, 2005 for failure to timely reply to the non-final Office action mailed July 20, 2005. The non-final Office action set a three (3) month shortened statutory period of time for reply. No extensions of time in accordance with 37 C.F.R. § 1.136 were timely requested. Notice of Abandonment was mailed February 9, 2006.

A grantable petition pursuant to 37 C.F.R. § 1.137(b) must be accompanied by: (1) the required reply to the outstanding Office action or notice, unless previously filed; (2) the petition fee as set forth in 37 C.F.R. § 1.17(m); (3) a statement that the entire delay in filing the required reply from the due date for the reply until the filing of a grantable petition pursuant to 37 C.F.R. § 1.137(b) was unintentional; and (4) any terminal disclaimer (and fee set forth in 37 C.F.R. § 1.20(d)) required pursuant to 37 C.F.R. § 1.137(c).

The instant petition has been reviewed and found in compliance with the provisions of 37 C.F.R. § 1.137(b). Accordingly, the failure to timely submit a proper reply to the non-final Office action is accepted as having been unintentionally delayed.

This application is being forwarded to Technology Center 3700 for further processing.

Telephone inquiries concerning this matter may be directed to the undersigned at (571) 272-3205.

Alesia M. Brown
Petitions Attorney
Office of Petitions

UNITED STATES PATENT AND TRADEMARK OFFICE

Commissioner for Patents
United States Patent and Trademark Office
P.O. Box 1450
Alexandria, VA 22313-1450
www.uspto.gov

PHILIP S. JOHNSON
JOHNSON & JOHNSON
ONE JOHNSON & JOHNSON PLAZA
NEW BRUNSWICK NJ 08933-7003

COPY MAILED

OCT 22 2007

OFFICE OF PETITIONS

In re Application of :
Edward Kaftan, et al. :
Application No. 10/975,798 :
Filed: October 28, 2004 :
Attorney Docket No. PRD3253USNP :

ON PETITION

This is a decision on the petition under the unintentional provisions of 37 CFR 1.137(b), filed April 25, 2007, to revive the above-identified application.

The petition is **GRANTED**.

The application became abandoned for failure to reply in a timely manner to the non-final Office action mailed, June 23, 2006, which set a shortened statutory period for reply of three (3) months. No extensions of time under the provisions of 37 CFR 1.136(a) were obtained. Accordingly, the application became abandoned on September 24, 2006.

The petition satisfies the requirements of 37 CFR 1.137(b) in that petitioner has supplied (1) the reply in the form of a continuing application under 37 CFR 1.53(b); (2) the petition fee of $1500; and (3) a proper statement of unintentional delay.

This application is being revived solely for purposes of continuity. As continuity has been established by this decision, the application is again abandoned in favor of continuing application.

Telephone inquiries concerning this decision should be directed to undersigned at (571) 272-1642.

April M. Wise
Petitions Examiner
Office of Petitions

UNITED STATES PATENT AND TRADEMARK OFFICE

Commissioner for Patents
United States Patent and Trademark Office
P.O. Box 1450
Alexandria, VA 22313-1450
www.uspto.gov

Paper No. 9

FUJITSU PATENT CENTER
C/O CPA GLOBAL
P.O. BOX 52050
MINNEAPOLIS MN 55402

COPY MAILED
FEB 18 2010

In re Patent No. 7,663,660	:
Issue Date: February 16, 2010	:
Application No. 10/975,820	: DECISION DISMISSING
Filed: October 29, 2004	: PETITION UNDER
Attorney Docket No. 04-40369	: 37 CFR 1.313(c)(2)

This is a decision on the petition under 37 CFR 1.313(c)(2), filed February 16, 2010, to withdraw the above-identified application from issue after payment of the issue fee.

The petition is **DISMISSED AS MOOT.**

The petition was filed on February 16, 2010. Petitioner's attention is directed to 37 CFR 1.313(d), which states:

> A petition under this section will not be effective to withdraw the application from issue unless it is actually received and granted by the appropriate officials **before the date of issue.** (Emphasis added)

In this case, the petition was not received in the Office of Petitions for consideration until February 16, 2010, the date upon which the above-identified application issued as U.S. Patent No. 7,663,660. Since the case has now issued, the petition to withdraw from issue cannot be granted.

The request for continued examination (RCE) filed concurrently with the petition is improper in view of the issuance of this application into a patent and will not be processed. Accordingly, the $810 filing fee and the $130 petition fee submitted are unnecessary and will be refunded in due course.

The Information Disclosure Statement has been made of record in the file of the above-identified application without further consideration. *See* 37 CFR 1.97(i).

Telephone inquiries concerning this matter may be directed to the undersigned at (571) 272-3208.

/KOC/
Karen Creasy
Petitions Examiner
Office of Petitions

RAM Fee History Query

Revenue Accounting and Management

Name/Number: 10975820 Total Records Found: 11

Start Date: Any Date End Date: Any Date

Accounting Date	Sequence Num.	Fee Type	Fee Code	Fee Amount	Mailroom Date	Payment Method
02/19/2010	00000010	4	1801	-$810.00	02/16/2010	DA 504610
02/19/2010	00000009	4	1464	-$130.00	02/16/2010	DA 504610
02/17/2010	00010475	4	1464	$130.00	02/16/2010	DA 504610
02/17/2010	00010476	4	1801	$810.00	02/16/2010	DA 504610
12/23/2009	00014869	4	1501	$1,510.00	12/23/2009	DA 504610
12/23/2009	00014870	4	1504	$300.00	12/23/2009	DA 504610
10/01/2009	00019324	4	1251	$130.00	09/30/2009	DA 504610
03/16/2009	00011829	4	1253	$1,110.00	03/16/2009	DA 504610
12/15/2008	00010857	4	8021	$40.00	12/11/2008	CC
11/01/2004	00000107	1	1001	$790.00	10/29/2004	CK
11/01/2004	00000108	1	8021	$40.00	10/29/2004	CK

```
Adjustment Date: 02/19/2010  LDIEP1
02/17/2010 INTEFSW  00006506 504610 10975820
01 FC:1464        130.00 CR
02 FC:1801        810.00 CR
```

UNITED STATES PATENT & TRADEMARK OFFICE
Washington, D.C. 20231

REQUEST FOR PATENT FEE REFUND

1 Date of Request: 02/18/10

2 Serial/Patent # 10/975,820

	3 Please refund the following fee(s):	4 PAPER NUMBER	5 DATE FILED	6 AMOUNT
	Filing			$
	Amendment			$
	Extension of Time			$
	Notice of Appeal/Appeal			$
	Petition		02/16/10	$ 130.00
	Issue			$
	Cert of Correction/Terminal Disc.			$
	Maintenance			$
	Assignment			$
	Other RCE		02/16/10	$ 810.00

7 TOTAL AMOUNT OF REFUND $ 940.00

8 TO BE REFUNDED BY:

	Treasury Check
X	Credit Deposit A/C #:

9 5 0 -- 4 6 1 0

10 REASON:

	Overpayment
	Duplicate Payment
	No Fee Due (Explanation):

Petition filed late. Therefore, the petition was dismissed as moot.

11 REFUND REQUESTED BY:

TYPED/PRINTED NAME: Karen Creasy TITLE: Petitions Examiner

SIGNATURE: /Karen Creasy/ PHONE: 2-3208

OFFICE: Petitions

****

THIS SPACE RESERVED FOR FINANCE USE ONLY:

APPROVED: KU DATE: 2/18/10

Instructions for completion of this form appear on the back. After completion, attach white and yellow copies to the official file and mail or hand-carry to:

Office of Finance
Refund Branch
Crystal Park One, Room 802B

FORM PTO 1577
(01/90)

UNITED STATES PATENT AND TRADEMARK OFFICE

Commissioner for Patents
United States Patent and Trademark Office
P.O. Box 1450
Alexandria, VA 22313-1450
www.uspto.gov

Moore, Hansen & Sumner, PLLP
Suite 4850
225 South Sixth Street
Minneapolis MN 55402

COPY MAILED

MAR 3 0 2005

OFFICE OF PETITIONS

In re Application of	:	
Schmeichel et al.	:	DECISION DISMISSING
Application No. 10/975,833	:	PETITION
Filed: October 28, 2004	:	
Attorney Docket No. A20-011-06-US	:	

This is a decision on the petition filed February 10, 2005, requesting that the above-identified application be accorded a filing date of October 28, 2004, with Figures 6 and 7 as part of the original disclosure.

On October 28, 2004, applicants filed the above-identified application. On December 10, 2004, the Office mailed a "Notice of Omitted Item(s)" (Notice), stating that the application had been accorded a filing date of October 28, 2004; however, Figures 6 and 7 described in the specification appeared to have been omitted.

In response, on February 10, 2005, applicants filed the present petition, one sheet of drawings (Figures 6 and 7), and an authorization to charge the petition fee.

Upon review of the record, Figures 6 and 7 have not been located in the official file. It is noted that the specification specifically incorporated by reference the disclosure of Application No. 10/668,771, filed September 23, 2003.

Section 201.06(c) of the Manual of Patent Examining Procedure states that:

> . . . an applicant may incorporate by reference the prior application by including, in the application-as-filed, a statement that such specifically enumerated prior application or applications are "hereby incorporated herein by reference." The statement may appear in the specification or in the application transmittal letter. The

> inclusion of this incorporation by reference of the prior application(s) will permit an applicant to amend the continuing application to include any subject matter in such prior application(s), without the need for a petition. (emphasis supplied).

Obviously, in view of the incorporation by reference of Application No. 10/668,771, the drawing of Figures 6 and 7 is not new matter if it was a part of the disclosure of Application No. 10/668,771. **If applicants desire that Figures 6 and 7 be added to the application, an amendment should be filed prior to the first action on the merits, which will be considered by the examiner.**

Accordingly, the Notice mailed on December 10, 2004, was correct in stating that Figures 6 and 7 described in the specification appeared to have been omitted. Therefore, the requirement for the omitted figures was proper and will not be withdrawn.

Accordingly, the petition is dismissed.

The current petition fee is $400.00. Applicants' deposit account has been charged as authorized.

The Office of Initial Patent Examination is directed to process the application with a filing date of October 28, 2004, using only the application papers filed on that date. Figures 6 and 7 will not be entered at this time.

Any inquiries related to this decision should be directed to the undersigned at (571) 272-3211.

Christina Tartera Donnell

Christina Tartera Donnell
Senior Petitions Attorney
Office of Petitions

UNITED STATES PATENT AND TRADEMARK OFFICE

Commissioner for Patents
United States Patent and Trademark Office
P.O. Box 1450
Alexandria, VA 22313-1450
www.uspto.gov

MOORE HANSEN & SUMNER, PLLP
SUITE 4850
225 SOUTH SIXTH STREET
MINNEAPOLIS, MN 55402

COPY MAILED
JUL 3 1 2006
OFFICE OF PETITIONS

In re Application of	:	
Schmeichel et al.	:	
Application No. 10/975,833	:	ON PETITION
Filed: October 28, 2004	:	
Attorney Docket No. A20-011-06-US	:	

This is a decision on the petition under 37 C.F.R. § 1.137(b), filed May 30, 2006, to revive the above-identified application.

The petition is **GRANTED.**

The petition satisfies the conditions for revival pursuant to the provisions of 37 CFR 1.137(b) in that (1) the reply in the form of Issue Fee Transmittal with payment of issue fee and publication fee; (2) the petition fee; and (3) the required statement of unintentional delay have been received. Accordingly, the response has been accepted as having been unintentionally delayed.

This matter is being referred to the Publishing Division for processing into a patent.

Telephone inquiries regarding this decision should be directed to the undersigned at (571) 272-3282.

Liana Chase
Petitions Examiner
Office of Petitions

UNITED STATES PATENT AND TRADEMARK OFFICE

Commissioner for Patents
United States Patent and Trademark Office
P.O. Box 1450
Alexandria, VA 22313-1450
www.uspto.gov

VOLPE AND KOENIG, P.C.
DEPT. ICC
UNITED PLAZA, SUITE 1600
30 SOUTH 17TH STREET
PHILADELPHIA, PA 19103

COPY MAILED

MAR 0 8 2006

OFFICE OF PETITIONS

In re Application of :
Francoeur, et al. :
Application No. 10/975,871 : ON PETITION
Filed: October 28, 2004 :
Attorney Docket No. I-2-0514.1US

This is a decision on the petition under 37 CFR 1.181(a) to withdraw the holding of abandonment, filed February 3, 2006. This is also a decision on the petition under 37 CFR 1.137(b) filed February 27, 2006.

The petition under 37 CFR 1.181(a) is **DISMISSED**.

The petition under 37 CFR 1.137(b) is **GRANTED.**

The above-identified application became abandoned for failure to reply to the "Notice of Allowance and Issue Fee Due" mailed August 8, 2005, requiring payment of the issue fee and publication fee. The notice set a statutory period for reply of three months from its mailing date. Form PTOL-85B was filed on August 26, 2005, authorizing the issue fee and publication fee to be charged to a deposit account, but the deposit account designated did not have sufficient funds to charge to entire amount due. The application became abandoned on November 27, 2005.

TREATMENT UNDER 37 CFR 1.181(a)

The holding of abandonment will not be withdrawn pursuant to 37 CFR 1.181(a) because there were not sufficient funds in the deposit account to cover the issue fee and publication fee on the date the Office made an attempt to charge the issue fee and publication fee. Accordingly, a proper reply to the Notice of Allowance and Issue Fee Due was not timely received; the holding of abandonment was properly imposed. The petition to withdraw the holding of abandonment is dismissed, accordingly.

TREATMENT UNDER 37 CFR 1.137(b)

The petition under 37 CFR 1.137(b) is granted.

The outstanding amount of $200.00 to be credited towards the satisfaction of the issue fee and publication fee was received on February 27, 2006.

The application file will be forwarded to the Office of Patent Publications for processing into a patent.

Telephone inquiries concerning this decision should be directed to the undersigned (571) 272-3222.

Kenya A. McLaughlin

Kenya A. McLaughlin
Petitions Attorney
Office of Petitions

SPE RESPONSE FOR CERTIFICATE OF CORRECTION

Paper No.: X

DATE : April 18, 2008

TO SPE OF : ART UNIT 2616

SUBJECT : Request for Certificate of Correction for Appl. No.: 10/975871 Patent No.: 7039026 B2

A response is requested with respect to a request for a certificate of correction.

With respect to the change(s) requested to correct Office and/or Applicant's errors, should the patent read as shown in the certificate of correction attached herewith or the COCIN document(s), in IFW images for the above-identified patented application? No new matter should be introduced, nor should the scope or meaning of the claims be changed.

If the response is for an IFW, within **7** days, please complete and forward the response, to the employee (named below) via scanning into application images, using document code **COCX**.

DO NOT SENT TO ATTORNEY

If the response is for a paper file wrapper, please complete the response and forward the response with the paper file wrapper, to the employee (named below), within **7** days, to:

Certificates of Correction Branch (CofC)
South Tower - 9A22
Palm Location 7580
You can fax the Directors/SPE response to 571-270-9390

LAMONTE NEWSOME
Certificates of Correction Branch
703-308-9390 ext. 112

Thank You For Your Assistance

The request for issuing the above-identified correction(s) is hereby:
Note your decision on the appropriate box.

X **Approved**	**All** changes apply.
☐ **Approved in Part**	Specify below which changes **do not** apply.
☐ **Denied**	State the reasons for denial below.

Comments: Corrections of Typographical Errors

/MELVIN MARCELO/ Primary Examiner

FIRMIN BACKER
SUPERVISORY PATENT EXAMINER

UNITED STATES PATENT AND TRADEMARK OFFICE

Commissioner for Patents
United States Patent and Trademark Office
P.O. Box 1450
Alexandria, VA 22313-1450
www.uspto.gov

Christopher P. Maiorana, P.C.
24840 Harper, Suite 100
St. Clair Shores, MI 48080

COPY MAILED

MAY 09 2007

OFFICE OF PETITIONS

In re Application of	:	
A. Gregory Caramanna	:	
Application No. 10/975,904	:	DECISION ON PETITION
Filed: October 28, 2004	:	TO WITHDRAW
Attorney Docket No. 4122.00001	:	FROM RECORD
	:	

This is a decision on the Request to Withdraw as attorney or agent of record under 37 C.F.R. § 1.36(b), filed February 12, 2007.

The request is **APPROVED**.

A grantable request to withdraw as attorney/agent of record must be signed by every attorney/agent seeking to withdraw or contain a clear indication that one attorney is signing on behalf of another/others. A request to withdraw will not be approved unless at least 30 (thirty) days would remain between the date of approval and the later of the expiration date of a time to file a response or the expiration date of the maximum time period which can be extended under 37 C.F.R. § 1.136(a).

The request was signed by John J. Ignatowski on behalf of all attorneys of record who are associated with customer No. 21615. All attorneys/agents associated with the Customer Number 21615 have been withdrawn.

Applicant is reminded that there is no attorney of record at this time.

The correspondence address is acceptable since it is that of the inventor in this application.

A Notice of Allowance and Fees Due action was mailed on March 27, 2007. The issue fee and publication fee must be paid within three months from the mailing date of this notice. Failure to do so will result in the abandonment of this application.

Telephone inquiries concerning this decision should be directed to Kimberly Inabinet at 571-272-4618.

Frances Hicks
Petitions Examiner
Office of Petitions

cc: A. Gregory Caramanna
8953 Dudley
Taylor, MI 48180

UNITED STATES PATENT AND TRADEMARK OFFICE

Commissioner for Patents
United States Patent and Trademark Office
P.O. Box 1450
Alexandria, VA 22313-1450
www.uspto.gov

MCDERMOTT WILL & EMERY LLP
600 13TH STREET, N.W.
WASHINGTON DC 20005-3096

COPY MAILED

OCT 13 2009

OFFICE OF PETITIONS

In re Application of :
Umetani, et al. :
Application No. 10/975,929 :
Filed: October 29, 2004 :
Attorney Docket No. 69804-0040 :

ON PETITION

This is a decision on the petition, filed September 15, 2009, under 37 CFR 1.137(b) to revive the above-identified application.

The petition is **GRANTED**.

The above-identified application became abandoned for failure to timely submit a reply within four (4) months of the mailing of the non-final Office action, mailed January 30, 2009. Petitioners obtained a one month extension of time under the provisions of 37 CFR 1.136(a), so the due date for reply was May 30, 2009. No response being received, this application became abandoned on May 31, 2009. A Notice of Abandonment was mailed on October 1, 2009.

Applicants have submitted an amendment in reply to the January 30, 2009 non-final Office action, an acceptable statement of the unintentional nature of the delay in responding to the January 30, 2009 non-final Office action, and the $1,620.00 petition fee.

All of the requirements under 37 CFR 1.137(b) being met, the petition is granted.

If a change in correspondence address is desired, a change of address should be filed in this case in accordance with MPEP 601.03.

After the mailing of this decision, the application will be returned to Technology Center AU 1791 for consideration of the amendment filed on September 15, 2009.

Telephone inquiries should be directed to the undersigned at (571) 272-3230.

Shirene Willis Brantley

Shirene Willis Brantley
Senior Petitions Attorney
Office of Petitions

UNITED STATES PATENT AND TRADEMARK OFFICE

COMMISSIONER FOR PATENTS
UNITED STATES PATENT AND TRADEMARK OFFICE
P.O. BOX 1450
ALEXANDRIA, VA 22313-1450
www.uspto.gov

JJGJR.: 03-05

Paper No. __

TUCKER, ELLIS & WEST LLP
1150 HUNTINGTON BUILDING
925 EUCLID AVENUE
CLEVELAND OH 44115-1475

COPY MAILED

MAR 1 1 2005

OFFICE OF PETITIONS

In re Application of	:	
Kress	:	
Application No. 10/975,938	:	DECISION ON PETITION
Filed: 31 January, 2005	:	
Attorney Docket No. 66329/00235	:	

This is a decision on the petition under 37 C.F.R. §1.53 and §1.182, filed on 31 January, 2005, requesting in the alternative that either: (a) Fig. 6 be given the original deposit (filing) date of the application, *i.e.*, 28 October, 2004; or that the application be given the filing date of the deposit of Fig. 6, i.e., 31 January, 2005.

The petition is **GRANTED in part** as to the later filing date; **in all other respects it is DISMISSED**.

The application was deposited on 28 October, 2004.

On 22 December, 2004, the Office of Initial Patent Examination (OIPE) mailed a "Notice to File Missing Parts," and therein also indicated, *inter alia*, that Fig. 6 as described in the specification appeared to be omitted from the application. The Notice informed Petitioner that the alternatives available were to: (a) petition contending that the application was deposited with the drawings; (b) file the drawings and accept their deposit date as the filing date of the application; or (c) prosecute the application as deposited on 28 October, 2004.

Petitioner replied on 31 January, 2005, as to the Notice, *inter alia*, with reply as to the Missing Parts, and also with the instant petition along with a copy of Fig. 6, and requested that either Fig. 6 be accorded a filing date of 28 October, 2004, or, alternatively (at Page 2 of the petition), that "[i]n the event that the present petition [for the 28 October, 2004, filing date is dismissed] it is respectfully requested that [the] enclosed Figure 6 be accepted for inclusion with the subject application and the date of the submission of Figure 6 be assigned as the filing date of the subject application."

Petitioner has made no showing that Fig. 6 was present on deposit on 28 October, 2004, with such evidence as a date-stamped receipt card. (See: MPEP §503.)[1] Therefore, the petition as to the earlier filing date for Fig. 6 cannot be granted.

However, Petitioner may make the election of the later filing date, as was the alternative pleading.

---

[1] The commentary at MPEP §503 provides in pertinent part:

* * *

RETURN POSTCARD

If a receipt for any item (e.g., paper or fee) filed in the USPTO is desired, it may be obtained by enclosing with the paper a self-addressed postcard specifically identifying the item. To ensure the receipt of return receipt postcards, users must either: (A) purchase already stamped postcards from the United States Postal Service (USPS) or affix postage stamps to their postcards; or (B) if a postage meter is used, ensure that the meter postmark does not show the date. Any return receipt postcard containing a dated meter postmark may not be delivered by the USPS to the address provided on the postcard.< The USPTO will stamp the receipt date on the postcard and place it in the outgoing mail. A postcard receipt which itemizes and properly identifies the items which are being filed serves as *prima facie* evidence of receipt in the USPTO of all the items listed thereon on the date stamped thereon by the USPTO.

The identifying data on the postcard should be so complete as to clearly identify the item for which >a< receipt is requested. For example, the postcard should identify the applicant's name, application number (if known), confirmation number (if known), filing date, interference number, title of the invention, etc. The postcard should also identify the type of paper being filed, e.g., new application, affidavit, amendment, notice of appeal, appeal brief, drawings, fees, motions, supplemental oath or declaration, petition, etc., and the number of pages being submitted. If a new application is being filed, all parts of the application being submitted should be separately listed on the postcard, e.g., the number of pages of specification (including written description, claims and abstract), number of claims, number of sheets of drawings, number of pages of oath/declaration, number of pages of cover sheet (provisional application).

The postcard receipt will not serve as *prima facie* evidence of receipt of any item which is not adequately itemized on the postcard. For example, merely listing on the postcard "a complete application" or "patent application" will not serve as a proper receipt for each of the required components of an application (e.g., specification (including claims), drawings (if necessary), oath or declaration and the application filing fee) or missing portions (e.g., pages, sheets of drawings) of an application if one of the components or portion of a component is found to be missing by the USPTO. Each separate component should be specifically and properly itemized on the postcard. Furthermore, merely incorporating by reference in the postcard receipt, the items listed in a transmittal letter will not serve as *prima facie* evidence of receipt of those items.

The person receiving the item(s) in the USPTO will check the listing on the postcard against the item(s) being filed to be sure they are properly identified and that all the items listed on the postcard are presently being submitted to the USPTO. If any of the items listed on the postcard are not being submitted to the USPTO, those items will be crossed off and the postcard initialed by the person receiving the items.

Upon return of a postcard receipt from the USPTO, the postcard receipt should be promptly reviewed by the person who filed the items to ensure that every item specifically denoted on the postcard was received by the USPTO. If the postcard receipt has been annotated to indicate that a particular item denoted on the postcard was not received by the USPTO, the postcard receipt will not serve as *prima facie* evidence of receipt of that item in the USPTO.

Therefore, the petition to accord a filing date of 31 January, 2005, the date of submission of Fig. 6, as the filing date of the entire application is **granted**; in all other respects the petition is **dismissed**.

The application is being forwarded to OIPE for further processing with a filing date of 31 January, 2005, using:

- **pages 1 - 14 of the specification (description, claims, abstract) and Figs. 1 - 5 of the 5 sheet of drawings deposited on 28 October, 2004; and**
- **Fig. 6 deposited on 31 January, 2005; and**

with direction to OIPE to correct Office records and provide to Petitioner a corrected filing receipt setting forth a filing date of 31 January, 2005, and reflecting therein that 14 pages of specification (description, claims and abstract) and 6 sheets of drawings (Figs. 1 - 6) were present on filing.

Telephone inquiries specific to this matter should be directed to the undersigned at (571) 272-3214.

John J. Gillon, Jr.
Senior Attorney
Office of Petitions

UNITED STATES PATENT AND TRADEMARK OFFICE

Commissioner for Patents
United States Patent and Trademark Office
P.O. Box 1450
Alexandria, VA 22313-1450
www.uspto.gov

BUSKOP LAW GROUP, P.C.
1776 YORKTOWN
SUITE 550
HOUSTON TX 77056

COPY MAILED

JUL 19 2006

OFFICE OF PETITIONS

In re Application of	:	
Leone et al.	:	
Application No. 10/975,943	:	ON PETITION
Filed: October 28, 2004	:	
Attorney Docket No. 1078.016A	:	

This is a decision on the petition under 37 CFR 1.102(c)(1), filed June 26, 2006, to make the above-identified application special based on applicant's age as set forth in M.P.E.P. § 708.02, Section IV.

The petition is **GRANTED**.

A grantable petition to make an application special under 37 CFR 1.102(c)(1) and MPEP § 708.02, Section IV: Applicant's Age must be accompanied by evidence showing that at least one of the applicants is 65 years of age, or more, such as a birth certificate or a statement by applicant. No fee is required.

The instant petition includes a copy of Melvyn Wayne Mellinger's passport. Accordingly, the above-identified application has been accorded "special" status.

Telephone inquiries concerning this decision should be directed to the undersigned at 571-272-3206. All other inquiries concerning either the examination or status of the application should be directed to the Technology Center.

This matter is being referred to the Technology Center Art Unit 3746 for action on the merits commensurate with this decision.

Liana Chase
Petitions Examiner
Office of Petitions

UNITED STATES PATENT AND TRADEMARK OFFICE

Commissioner for Patents
United States Patent and Trademark Office
P.O. Box 1450
Alexandria, VA 22313-1450
www.uspto.gov

3/24/06

Patent No. :7304333
Ser. No. : 10975957
Inventor(s) :NIWA, Takaki
Issued : 12/4/07
Title : SEMICONDUCTOR DEVICE
Docket No. :

Re: Request for Certificate of Correction

Consideration has been given your request for the issuance of a certificate of correction for the above-identified patent under the provisions of Rule(s) 1.322 and/or 1.323.

Assignees' names and addresses (assignment data) printed in a patent, are based *solely* on information supplied in the appropriate space for identifying the assignment data, i.e., item 3 of the Issue Fee Transmittal Form PTOL-85B. Granting of a request under 37 CFR 3.81(b) is required to correct applicant's error providing ***incorrect or erroneous*** assignment data, *before* issuance of a Certificate of Correction, under 37 CFR 1.323 *(see Manual of Patent Examining Procedures (M.P.E.P) Chp.1400, sect. 1481).* This procedure is required *at any time after the issue fee is paid*, including after issuance of the patent.

In view of the foregoing, your request, in this mater, is hereby denied.

A request to correct the Assignee under 37 CFR 3.81(b) should include:

A. **the processing fee set forth in 37 CFR 1.117(h) (currently $130);**
B. a statement that the failure to include the correct assignee name on the PTOL-85B was inadvertent; and
C. a copy of the Notice of Recordation of Assignment Document, reflecting the reel and frame number where the assignment(s) is recorded and/or reflecting proof of *the date* the assignment was submitted for recordation.

In the Request, Applicant(s) may request that the file be forwarded to Certificates of Correction Branch, for issuance of a Certificate of Correction, if the Request is granted.

Any request under 37 CFR 3.81(b) should be directed to the following address or facsimile number:

By mail: Mail Stop PETITIONS
Commissioner for Patents
Post Office Box 1450
Alexandria, VA 22313-1450

By hand: Customer Service Window
Mail Stop Petitions
Randolph Building
40l Dulany Street
Alexandria, VA 22314

By fax: (703) 872-9306
ATTN: Office of Petitions

If a fee (currently $100) was previously submitted for consideration of a Request for Certificate of Correction, under CFR 1.323, to correct assignment data, , no additional fee is required.

A certificate of correction will be issued to correct the remaining errors noted in your request.

Henry Randall
For Cecelia Newman
Decisions & Certificates
of Correction Branch
(703) 308-9390 Ext. 108

McGinn IP Law Group LLP
8321 Old Courthouse Road, Suite 200
Vienna, Virginia 22182

HR

UNITED STATES PATENT AND TRADEMARK OFFICE

Commissioner for Patents
United States Patent and Trademark Office
P.O. Box 1450
Alexandria, VA 22313-1450
www.uspto.gov

MCGINN INTELLECTUAL PROPERTY LAW GROUP, PLLC
8321 OLD COURTHOUSE ROAD
SUITE 200
VIENNA, VA 22182-3817

COPY MAILED

SEP 2 9 2008

OFFICE OF PETITIONS

In re Patent No. 7,304,333
Application No. 10/975,957
Filed: October 29, 2004
Issued: December 4, 2007
Attorney Docket No. NEC04160US

ON PETITION

This is a decision on the petition filed April 21, 2008, which is being treated as a request under 37 CFR 3.81(b)[1] to correct the name of the assignee on the front page of the above-identified patent by way of a Certificate of Correction.

The request is **GRANTED**.

This matter is being referred to the Certificates of Correction Branch for issuance of the requested Certificate of Correction.

Telephone inquiries concerning this decision may be directed to Joan Olszewski at (571) 272-7751. Inquiries regarding the issuance of a certificate of correction should be directed to the Certificate of Correction Branch at (571) 272-4200.

/Liana Walsh/
Liana Walsh
Petitions Examiner
Office of Petitions

[1] *See* MPEP 1309, subsection II; and Official Gazette of June 22, 2004.

UNITED STATES PATENT AND TRADEMARK OFFICE

Commissioner for Patents
United States Patent and Trademark Office
P.O. Box 1450
Alexandria, VA 22313-1450
www.uspto.gov
DIW Apr-08

JAMES G. COPLIT, ESQ.
GRIMES & BATTERSBY, LLP
THIRD FLOOR
488 MAIN AVENUE
NORWALK CT 06851

COPY MAILED

APR 17 2008

OFFICE OF PETITIONS

In re Application of	:	
Alexander Virvo	:	DECISION ON PETITION TO
Application Number: 10/975961	:	WITHDRAW HOLDING OF
Filing Date: 10/28/2004	:	ABANDONMENT
Attorney Docket Number:	:	
BAD019USU	:	

This is a decision in reference to the "PETITION FOR REVIVAL OF ABANDONED APPLICATION FOR PATENT," filed on October 15, 2007, which is treated as a petition to withdraw the holding of abandonment.

The petition is **GRANTED**.

The application was held abandoned for failure to timely respond to the final Office action mailed on March 14, 2007, which set a three (3) month shortened statutory period for reply. Notice of Abandonment was mailed on September 21, 2007.

Petitioner asserts that a proper and timely reply in the form of a Request for Continued Examination (RCE), an amendment as the submission required under 37 CFR 1.114, and a three (3) month extension of time was filed. A copy of the reply asserted to have been timely filed is included with the subject petition.

A review of the record reveals that the RCE request, submission and three (3) month extension of time was filed on September 18, 2007 (certificate of mailing date September 13, 2007), and is located in the Office's Image File Wrapper system.

As such, the papers filed on September 18, 2007, constituted a complete and timely response to the final Office action mailed on March 14, 2007.

Therefore, the showing of record is that a response was timely filed, and there is no abandonment in fact.

The holding of abandonment is withdrawn, and the Notice of Abandonment is vacated.

The Office apologizes for any inconvenience to petitioner.

The application will be referred to Technology Center Art Unit 3677 for further processing.

Telephone inquiries concerning this matter may be directed to the undersigned at (571)272-3231.

D Wood

Douglas I. Wood
Senior Petitions Attorney
Office of Petitions

UNITED STATES PATENT AND TRADEMARK OFFICE

UNITED STATES DEPARTMENT OF COMMERCE
United States Patent and Trademark Office
Address: COMMISSIONER FOR PATENTS
P.O. Box 1450
Alexandria, Virginia 22313-1450
www.uspto.gov

FENWICK & WEST LLP
SILICON VALLEY CENTER
801 CALIFORNIA STREET
MOUNTAIN VIEW, CA 94041

Mail Date: 04/21/2010

Applicant	: Debabrata Dash	: DECISION ON REQUEST FOR
Patent Number	: 7644438	: RECALCULATION of PATENT
Issue Date	: 01/05/2010	: TERM ADJUSTMENT IN VIEW
Appliction No	: 10/975,962	: OF WYETH AND NOTICE OF INTENT TO
Filed	: 10/27/2004	: ISSUE CERTIFICATE OF CORRECTION
		:

The Request for Recalculation is **GRANTED** to the extent indicated.

The patent term adjustment has been determined to be **1155** days. The USPTO will *sua sponte* issue a certificate of correction reflecting the amount of PTA days determined by the recalculation.

Prior to the issuance of the certificate of correction, the USPTO will afford patentee an opportunity to be heard and request reconsideration. Accordingly, patentee has **one month or thirty (30) days**, whichever is longer, to file a request for reconsideration of this patent term adjustment calculation. See 35 U.S.C. 154(b)(3)(B)(ii) and 37 CFR 1.322(a)(4). No extensions of time will be granted under 37 CFR 1.136.

Patentee should use document code PET.OP if electronically filing a request for reconsideration of this patent term adjustment calculation. The patentee must also include the information required by 37 CFR 1.705(b)(2) and the fee required by 37 CFR 1.18(e). If patentee does not file a timely request for reconsideration of this patent term adjustment calculation including the information required by 37 CFR 1.705(b)(2) and the fee required by 37 CFR 1.18(e), the USPTO will issue a certificate of correction reflecting the PTA determination noted above.

Patentee should be aware that in order to preserve the right to review in the United States District Court for the District of Columbia of the USPTO patent term adjustment determination, patentee must ensure that he or she also take the steps required under 35 U.S.C. 154(b)(4)(A) in a timely manner. Nothing in the request for recalculation should be construed as providing an alternative time frame for commencing a civil action under 35 U.S.C. 154(b)(4)(A).

Any questions concerning this decision should be directed to the Office of Patent Legal Administration at 571-272-7702.

UNITED STATES PATENT AND TRADEMARK OFFICE

Commissioner for Patents
United States Patent and Trademark Office
P.O. Box 1450
Alexandria, VA 22313-1450
www.uspto.gov

MAY 31 2005

Nicole Kuzmin-Nichols
3650 Spectrum Boulevard, UTC III,
Suite 170
Tampa, FL 33612

In re application of	:	**DECISION ON PETITION**
Hermann Knippscheer, et al	:	**TO MAKE SPECIAL**
Application No. 10/975,964	:	**(APPLICANT'S AGE)**
Filed: October 28, 2004	:	
For: METHOD OF VIEWING IMAGES OF REMAINS AND PHOTOS TOGETHER WITH VIDEO BACKGROUNDS AND AUDIO ON TELEVISION AND THE INTERNET		

This is a decision on the petition submitted on October 28, 2004 under 37 CFR 1.102 (c) to make the above-identified application special under the accelerated examination procedure set forth in MPEP 708.02, Section IV: Applicant's Age.

The petition is **GRANTED**.

An application may be accorded special status upon the filing of a petition providing evidence showing that the applicant is at least 65 years old. Such a showing may be provided by evidence such as a birth certificate or a statement from the applicant.

The evidence submitted with the petition is a declaration signed by Daniel D. Richard indicating that he is at least 65 years of age.

The examiner is directed (1) to make an interference search for possible interfering applications, (2) to promptly examine this application out of turn, and (3) if any interfering application is discovered, to examine such application simultaneously and state in the first official letter of such application that it is being taken out of turn because of a possible interference.

Petitioner is advised that this application will continue to be special, throughout its entire prosecution and pendency, including interference or appeal, if any, only if petitioner makes a prompt ***bona fide*** effort, in response to each Office action, to place the application in condition for allowance, even if it is necessary to conduct an interview with the examiner to accomplish this purpose.

SUMMARY: Petition to Make Special **GRANTED**.

Randolph A. Reese
Special Programs Examiner
Technology Center 3600
(703) 308-2121

RAR/dcg: 2/25/05

UNITED STATES PATENT AND TRADEMARK OFFICE

Commissioner for Patents
United States Patent and Trademark Office
P.O. Box 1450
Alexandria, VA 22313-1450
www.uspto.gov

YAMAHA HATSUDOKI KABUSHIKI KAISHA
C/O KEATING & BENNETT, LLP
8180 GREENSBORO DRIVE
SUITE 850
MCLEAN VA 22102

COPY MAILED

AUG 17 2007

OFFICE OF PETITIONS

In re Patent No. 7,182,169	:	
Issue Date: 02/27/2007	:	
Application No. 10/975,968	:	DECISION ON PETITION
Filed: 10/28/2004	:	
Attorney Docket No. 90606.9	:	

This is a decision on the petition filed March 27, 2007, which is being treated as a request under 37 CFR 3.81(b)[1] to correct the name of the assignee on the front page of the above-identified patent by way of a Certificate of Correction.

The request is **GRANTED**.

The $130.00 processing fee and the $100.00 certificate of correction fee will be charged to the Deposit Account, as authorized.

Telephone inquiries concerning this decision may be directed to the undersigned at (571) 272-3211. Inquiries regarding the issuance of a certificate of correction should be directed to the Certificate of Correction Branch at (571) 272-4200.

The Certificates of Correction Branch will be notified of this decision granting the petition under 37 CFR 3.81(b) and directing issuance of the requested Certificate of Correction.

C. T. Donnell

Christina Tartera Donnell
Senior Petitions Attorney
Office of Petitions

[1] *See* MPEP 1309, subsection II; and Official Gazette of June 22, 2004.

UNITED STATES PATENT AND TRADEMARK OFFICE

UNITED STATES DEPARTMENT OF COMMERCE
United States Patent and Trademark Office
Address: COMMISSIONER FOR PATENTS
P.O. Box 1450
Alexandria, Virginia 22313-1450
www.uspto.gov

HAYNES BEFFEL & WOLFELD LLP
P O BOX 366
HALF MOON BAY, CA 94019

Mail Date: 04/21/2010

Applicant	: Jeffrey Axelrod	: DECISION ON REQUEST FOR
Patent Number	: 7590972	: RECALCULATION of PATENT
Issue Date	: 09/15/2009	: TERM ADJUSTMENT IN VIEW
Appliction No	: 10/975,975	: OF WYETH AND NOTICE OF INTENT TO
Filed	: 10/28/2004	: ISSUE CERTIFICATE OF CORRECTION
		:

The Request for Recalculation is **GRANTED** to the extent indicated.

The patent term adjustment has been determined to be **1201** days. The USPTO will *sua sponte* issue a certificate of correction reflecting the amount of PTA days determined by the recalculation.

Prior to the issuance of the certificate of correction, the USPTO will afford patentee an opportunity to be heard and request reconsideration. Accordingly, patentee has **one month or thirty (30) days**, whichever is longer, to file a request for reconsideration of this patent term adjustment calculation. See 35 U.S.C. 154(b)(3)(B)(ii) and 37 CFR 1.322(a)(4). No extensions of time will be granted under 37 CFR 1.136.

Patentee should use document code PET.OP if electronically filing a request for reconsideration of this patent term adjustment calculation. The patentee must also include the information required by 37 CFR 1.705(b)(2) and the fee required by 37 CFR 1.18(e). If patentee does not file a timely request for reconsideration of this patent term adjustment calculation including the information required by 37 CFR 1.705(b)(2) and the fee required by 37 CFR 1.18(e), the USPTO will issue a certificate of correction reflecting the PTA determination noted above.

Patentee should be aware that in order to preserve the right to review in the United States District Court for the District of Columbia of the USPTO patent term adjustment determination, patentee must ensure that he or she also take the steps required under 35 U.S.C. 154(b)(4)(A) in a timely manner. Nothing in the request for recalculation should be construed as providing an alternative time frame for commencing a civil action under 35 U.S.C. 154(b)(4)(A).

Any questions concerning this decision should be directed to the Office of Patent Legal Administration at 571-272-7702.

UNITED STATES PATENT AND TRADEMARK OFFICE

UNITED STATES DEPARTMENT OF COMMERCE
United States Patent and Trademark Office
Address: COMMISSIONER FOR PATENTS
P.O. Box 1450
Alexandria, Virginia 22313-1450
www.uspto.gov

MICHAEL BEST & FRIEDRICH LLP
100 E WISCONSIN AVENUE
Suite 3300
MILWAUKEE, WI 53202

Mail Date: 04/21/2010

Applicant	: Joseph L. Meloche	: DECISION ON REQUEST FOR
Patent Number	: 7600985	: RECALCULATION of PATENT
Issue Date	: 10/13/2009	: TERM ADJUSTMENT IN VIEW
Appliction No	: 10/976,007	: OF WYETH AND NOTICE OF INTENT TO
Filed	: 10/28/2004	: ISSUE CERTIFICATE OF CORRECTION
		:

The Request for Recalculation is **GRANTED** to the extent indicated.

The patent term adjustment has been determined to be **1044** days. The USPTO will *sua sponte* issue a certificate of correction reflecting the amount of PTA days determined by the recalculation.

Prior to the issuance of the certificate of correction, the USPTO will afford patentee an opportunity to be heard and request reconsideration. Accordingly, patentee has **one month or thirty (30) days**, whichever is longer, to file a request for reconsideration of this patent term adjustment calculation. See 35 U.S.C. 154(b)(3)(B)(ii) and 37 CFR 1.322(a)(4). No extensions of time will be granted under 37 CFR 1.136.

Patentee should use document code PET.OP if electronically filing a request for reconsideration of this patent term adjustment calculation. The patentee must also include the information required by 37 CFR 1.705(b)(2) and the fee required by 37 CFR 1.18(e). If patentee does not file a timely request for reconsideration of this patent term adjustment calculation including the information required by 37 CFR 1.705(b)(2) and the fee required by 37 CFR 1.18(e), the USPTO will issue a certificate of correction reflecting the PTA determination noted above.

Patentee should be aware that in order to preserve the right to review in the United States District Court for the District of Columbia of the USPTO patent term adjustment determination, patentee must ensure that he or she also take the steps required under 35 U.S.C. 154(b)(4)(A) in a timely manner. Nothing in the request for recalculation should be construed as providing an alternative time frame for commencing a civil action under 35 U.S.C. 154(b)(4)(A).

Any questions concerning this decision should be directed to the Office of Patent Legal Administration at 571-272-7702.

UNITED STATES PATENT AND TRADEMARK OFFICE

Commissioner for Patents
United States Patent and Trademark Office
P.O. Box 1450
Alexandria, VA 22313-1450
www.uspto.gov

LINIAK BERENATO & WHITE, LLC
SUITE 240
6550 ROCK SPRING DRIVE
BETHESDA, MD 20817

COPY MAILED
MAR 2 3 2006
OFFICE OF PETITIONS

In re Application of :
Guido De Leo, et al. :
Application No. 10/976,023 : ON PETITION
Filed: October 29, 2004 :
Attorney Docket No. 4235.416 :

This is a decision on the Request to Withdraw as attorney or agent of record under 37 C.F.R. § 1.36(b), filed January 5, 2006.

The request is **APPROVED**.

A grantable request to withdraw as attorney/agent of record must be signed by every attorney/agent seeking to withdraw or contain a clear indication that one attorney is signing on behalf of another/others. A request to withdraw will not be approved unless at least 30 (thirty) days would remain between the date of approval and the later of the expiration date of a time to file a response or the expiration date of the maximum time period which can be extended under 37 C.F.R. § 1.136(a).

Thomas P. Liniak has been withdrawn as attorney or agent of record; all other attorneys remain of record.

Telephone inquiries concerning this decision should be directed to Retta Williams at (571) 272-3229.

Denise Pothier
Petitions Examiner
Office of Petitions

UNITED STATES PATENT AND TRADEMARK OFFICE

Commissioner for Patents
United States Patent and Trademark Office
P.O. Box 1450
Alexandria, VA 22313-1450
www.uspto.gov

Nixon & Vanderhye, PC
901 North Glebe Road, 11th Floor
Arlington, VA 22203

COPY MAILED

AUG 2 8 2007

OFFICE OF PETITIONS

In re Application of	:	
Shin-ichi Hashimoto et al.	:	
Application No. 10/976,042	:	DECISION ON PETITION
Filed: December 29, 2004	:	TO WITHDRAW
Attorney Docket No. 00005.001314	:	FROM RECORD
	:	

This is a decision on the Request to Withdraw as attorney or agent of record under 37 C.F.R. § 1.36(b), filed April 4, 2007.

The request is **NOT APPROVED** as moot.

A review of the file record indicates that the power of attorney to Nixon & Vanderhye, PC has been revoked by the assignee of the patent application on May 24, 2007. Accordingly, the request to withdraw under 37 C.F.R. § 1.36(b) is moot.

All future communications from the Office will continue to be directed to the below-listed address until otherwise notified by applicant.

Telephone inquires concerning this decision should be directed to Terri Williams at 571-272-2991.

T. Williams

Terri Williams
Petitions Examiner
Office of Petitions

cc: **Fitzpatrick Cella Harper & Scinto**
30 Rockefeller Plaza
New York, NY 10112

UNITED STATES PATENT AND TRADEMARK OFFICE

Commissioner for Patents
United States Patent and Trademark Office
P.O. Box 1450
Alexandria, VA 22313-1450
www.uspto.gov

BROOKS KUSHMAN P.C.
1000 TOWN CENTER
TWENTY-SECOND FLOOR
SOUTHFIELD, MI 48075

COPY MAILED

SEP 02 2008

In re Application of	:	
Yet **CHAN**	:	
Application No. 10/976,048	:	ON PETITION
Filed: October 28, 2004	:	
Attorney Docket No. LWC0105PUSA	:	

This is a decision on the petition under the unintentional provisions of 37 CFR 1.137(b), filed December 14, 2007, to revive the above-identified application.

The petition is **GRANTED**.

The application became abandoned for failure to timely file a reply within the meaning of 37 CFR 1.113 to the final Office action of November 30, 2006 . The proposed reply required for consideration of a petition to revive must be a Notice of Appeal (and appeal fee required by 37 CFR 41.20(b)(2), an amendment that *prima facie* places the application in condition for allowance, a Request for Continued Examination and submission (37 CFR 1.114), or the filing of a continuing application under 37 CFR 1.53(b). See MPEP 711.03(c)(II)(A)(2). A three (3) month extension of time pursuant to the provisions of 37 CFR 1.136(a) was obtained. Accordingly, the date of abandonment of this application is May 30, 2007.

The petition satisfies the requirements of 37 CFR 1.137(b) in that petitioner has supplied (1) the reply in the form of a Request for Continued Examination (RCE) and fee of $810, and the submission required by 37 CFR 1.114; (2) the petition fee of $1540; and (3) an adequate statement of unintentional delay have been received.

37 CFR 1.137(b)(3) requires a statement that "the entire delay in filing the required reply from the due date for the reply until the filing of a grantable petition pursuant to 37 CFR 1.137(b) was unintentional." Since the statement appearing in the petition varies from the language required by 37 CFR 1.137(b)(3), the statement is being construed as the required statement. Petitioner must notify the Office if this is **not** a correct reading of the statement appearing in the petition.

Telephone inquiries concerning this decision should be directed to Diane Goodwyn at (571) 272-6735.

This application is being referred to Technology Center AU 3753 for processing of the RCE and for appropriate action by the Examiner in the normal course of business on the previously filed amendment dated December 14, 2007 in accordance with 37 CFR 1.114.

Thurman K. Page

Thurman Page
Petitions Examiner
Office of Petitions

UNITED STATES PATENT AND TRADEMARK OFFICE

COMMISSIONER FOR PATENTS
UNITED STATES PATENT AND TRADEMARK OFFICE
P.O. BOX 1450
ALEXANDRIA, VA 22313-1450
www.uspto.gov

MAR 14 2005

In re Application of	:	
Robert Nymann	:	
Serial No. 10/976,058	:	DECISION ON PETITION
Filed: October 26, 2004	:	TO MAKE SPECIAL
For: JACK FOR HEAVY OBJECTS	:	

Applicant's petition, filed October 26, 2004, requests that this application be rendered special for examination in that applicant is over sixty-five (65) years of age.

The petition has been reviewed and is found to be in compliance with the requirements for special status as set forth in Section 708.02(IV) of the Manual of Patent Examining Procedure (MPEP).

PETITION GRANTED.

E. R. Kazenske, Director
Technology Center 3700

Rob L. Phillips
Quirk & Tratos
3773 Howard Hughes Pkwy., Ste. 500 North
Las Vegas, NV 89109

UNITED STATES PATENT AND TRADEMARK OFFICE

UNITED STATES DEPARTMENT OF COMMERCE
United States Patent and Trademark Office
Address: COMMISSIONER FOR PATENTS
P.O. Box 1450
Alexandria, Virginia 22313-1450
www.uspto.gov

VISTA IP LAW GROUP LLP
12930 Saratoga Avenue
Suite D-2
Saratoga, CA 95070

Mail Date: 04/21/2010

Applicant	: Woojin Lee	: DECISION ON REQUEST FOR
Patent Number	: 7608083	: RECALCULATION of PATENT
Issue Date	: 10/27/2009	: TERM ADJUSTMENT IN VIEW
Appliction No	: 10/976,066	: OF WYETH AND NOTICE OF INTENT TO
Filed	: 10/28/2004	: ISSUE CERTIFICATE OF CORRECTION
		:

The Request for Recalculation is **GRANTED** to the extent indicated.

The patent term adjustment has been determined to be **1066** days. The USPTO will *sua sponte* issue a certificate of correction reflecting the amount of PTA days determined by the recalculation.

Prior to the issuance of the certificate of correction, the USPTO will afford patentee an opportunity to be heard and request reconsideration. Accordingly, patentee has **one month or thirty (30) days**, whichever is longer, to file a request for reconsideration of this patent term adjustment calculation. See 35 U.S.C. 154(b)(3)(B)(ii) and 37 CFR 1.322(a)(4). No extensions of time will be granted under 37 CFR 1.136.

Patentee should use document code PET.OP if electronically filing a request for reconsideration of this patent term adjustment calculation. The patentee must also include the information required by 37 CFR 1.705(b)(2) and the fee required by 37 CFR 1.18(e). If patentee does not file a timely request for reconsideration of this patent term adjustment calculation including the information required by 37 CFR 1.705(b)(2) and the fee required by 37 CFR 1.18(e), the USPTO will issue a certificate of correction reflecting the PTA determination noted above.

Patentee should be aware that in order to preserve the right to review in the United States District Court for the District of Columbia of the USPTO patent term adjustment determination, patentee must ensure that he or she also take the steps required under 35 U.S.C. 154(b)(4)(A) in a timely manner. Nothing in the request for recalculation should be construed as providing an alternative time frame for commencing a civil action under 35 U.S.C. 154(b)(4)(A).

Any questions concerning this decision should be directed to the Office of Patent Legal Administration at 571-272-7702.

UNITED STATES PATENT AND TRADEMARK OFFICE

UNITED STATES DEPARTMENT OF COMMERCE
United States Patent and Trademark Office
Address: COMMISSIONER FOR PATENTS
P.O. Box 1450
Alexandria, Virginia 22313-1450
www.uspto.gov

HICKMAN PALERMO TRUONG & BECKER, LLP
2055 GATEWAY PLACE
SUITE 550
SAN JOSE, CA 95110

Mail Date: 06/08/2010

Applicant	: Ian Michael Shand	: DECISION ON REQUEST FOR
Patent Number	: 7630298	: RECALCULATION of PATENT
Issue Date	: 12/08/2009	: TERM ADJUSTMENT IN VIEW
Application No	: 10/976,076	: OF WYETH AND NOTICE OF INTENT TO
Filed	: 10/27/2004	: ISSUE CERTIFICATE OF CORRECTION
		:

The Request for Recalculation is **GRANTED** to the extent indicated.

The patent term adjustment has been determined to be **607** days. The USPTO will *sua sponte* issue a certificate of correction reflecting the amount of PTA days determined by the recalculation.

Prior to the issuance of the certificate of correction, the USPTO will afford patentee an opportunity to be heard and request reconsideration. Accordingly, patentee has **one month or thirty (30) days**, whichever is longer, to file a request for reconsideration of this patent term adjustment calculation. See 35 U.S.C. 154(b)(3)(B)(ii) and 37 CFR 1.322(a)(4). No extensions of time will be granted under 37 CFR 1.136.

Patentee should use document code PET.OP if electronically filing a request for reconsideration of this patent term adjustment calculation. The patentee must also include the information required by 37 CFR 1.705(b)(2) and the fee required by 37 CFR 1.18(e). If patentee does not file a timely request for reconsideration of this patent term adjustment calculation including the information required by 37 CFR 1.705(b)(2) and the fee required by 37 CFR 1.18(e), the USPTO will issue a certificate of correction reflecting the PTA determination noted above.

Patentee should be aware that in order to preserve the right to review in the United States District Court for the District of Columbia of the USPTO patent term adjustment determination, patentee must ensure that he or she also take the steps required under 35 U.S.C. 154(b)(4)(A) in a timely manner. Nothing in the request for recalculation should be construed as providing an alternative time frame for commencing a civil action under 35 U.S.C. 154(b)(4)(A).

Any questions concerning this decision should be directed to the Office of Patent Legal Administration at 571-272-7702.

UNITED STATES PATENT AND TRADEMARK OFFICE

UNITED STATES DEPARTMENT OF COMMERCE
United States Patent and Trademark Office
Address: COMMISSIONER FOR PATENTS
P.O. Box 1450
Alexandria, Virginia 22313-1450
www.uspto.gov

FOLEY HOAG, LLP
PATENT GROUP, WORLD TRADE CENTER WEST
155 SEAPORT BLVD
BOSTON, MA 02110

Mail Date: 04/21/2010

Applicant	: Hermano Igo Krebs	: DECISION ON REQUEST FOR
Patent Number	: 7618381	: RECALCULATION of PATENT
Issue Date	: 11/17/2009	: TERM ADJUSTMENT IN VIEW
Appliction No	: 10/976,083	: OF WYETH AND NOTICE OF INTENT TO
Filed	: 10/27/2004	: ISSUE CERTIFICATE OF CORRECTION
		:

The Request for Recalculation is **GRANTED** to the extent indicated.

The patent term adjustment has been determined to be **1330** days. The USPTO will *sua sponte* issue a certificate of correction reflecting the amount of PTA days determined by the recalculation.

Prior to the issuance of the certificate of correction, the USPTO will afford patentee an opportunity to be heard and request reconsideration. Accordingly, patentee has **one month or thirty (30) days**, whichever is longer, to file a request for reconsideration of this patent term adjustment calculation. See 35 U.S.C. 154(b)(3)(B)(ii) and 37 CFR 1.322(a)(4). No extensions of time will be granted under 37 CFR 1.136.

Patentee should use document code PET.OP if electronically filing a request for reconsideration of this patent term adjustment calculation. The patentee must also include the information required by 37 CFR 1.705(b)(2) and the fee required by 37 CFR 1.18(e). If patentee does not file a timely request for reconsideration of this patent term adjustment calculation including the information required by 37 CFR 1.705(b)(2) and the fee required by 37 CFR 1.18(e), the USPTO will issue a certificate of correction reflecting the PTA determination noted above.

Patentee should be aware that in order to preserve the right to review in the United States District Court for the District of Columbia of the USPTO patent term adjustment determination, patentee must ensure that he or she also take the steps required under 35 U.S.C. 154(b)(4)(A) in a timely manner. Nothing in the request for recalculation should be construed as providing an alternative time frame for commencing a civil action under 35 U.S.C. 154(b)(4)(A).

Any questions concerning this decision should be directed to the Office of Patent Legal Administration at 571-272-7702.

UNITED STATES PATENT AND TRADEMARK OFFICE

Commissioner for Patents
United States Patent and Trademark Office
P.O. Box 1450
Alexandria, VA 22313-1450
www.uspto.gov

ANDRUS, SCEALES, STARKE & SAWALL, LLP
100 EAST WISCONSIN AVENUE, SUITE 1100
MILWAUKEE WI 53202

COPY MAILED
SEP 14 2006
OFFICE OF PETITIONS

In re Application of	:
Michael W. Humcke et al.	:
Application No. 10/976,128	: DECISION GRANTING PETITION
Filed: October 28, 2004	:
Attorney Docket No: 5028-0001	:

This is a decision on the petition, filed March 14, 2006, under 37 CFR 1.137(f) which is treated as a petition to revive the above-identified nonprovisional application under the unintentional provisions of 37 CFR 1.137(b).

The petition is **GRANTED**.

Petitioner states that the present nonprovisional application is the subject of a foreign or international application filed on September 15, 2005. However, the U.S. Patent and Trademark Office was unintentionally not notified of this filing within 45 days subsequent to the filing of the subject application in a foreign country.

In view of the above, this application became abandoned pursuant to 35 U.S.C. § 122(b)(2)(B)(iii) and 37 CFR 1.213(c) for failure to timely notify the Office of the filing of an application in a foreign country, or under a multilateral international agreement, that requires publication of applications 18 months after filing.

A petition under 37 CFR 1.137(f) must be accompanied by:

(1) the reply which is met by the notification of such filing in a foreign country or under a multinational treaty;

(2) the petition fee as set forth in 37 CFR 1.17(m); and

(3) a statement that the entire delay in filing the required reply from the due date of the reply until the filing of a grantable petition was unintentional.

The present petition has been found to be in compliance with 37 CFR 1.137(f). Accordingly, the failure to timely notify the Office of a foreign or international filing within 45 days after the date of filing of such foreign or international application as provided by 35 U.S.C. § 122(b)(2)(B)(I) has been rescinded. The projected publication date is December 21, 2006 and a copy of the communication regarding rescission is included herein.

The petition fee in the amount of $750.00 has been applied to the finance records for this application.

This matter is being referred to Technology Center 3725 for further examination in due course.

Telephone inquiries related to this decision should be directed to the undersigned Petitions Attorney at (571) 272-3212.

Patricia Faison-Ball

Patricia Faison-Ball
Senior Petitions Attorney
Office of Petitions

UNITED STATES PATENT AND TRADEMARK OFFICE

Commissioner for Patents
United States Patent and Trademark Office
P.O. Box 1450
Alexandria, VA 22313-1450
www.uspto.go

MAILED
FROM DIRECTOR'S OFFICE

OCT 30 2007

TECHNOLOGY CENTER 3600

In re Patent No. CHIU ET AL.	:	
Issue Date: July 3, 2007	:	**DECISION GRANTING**
Appl No.: 10/976,153	:	**PETITION**
Filed: October 29, 2004	:	*37 CFR 1.324*
For: AUTONOMOUS, BACK-PACKABLE	:	
COMPUTER-CONTROLLED BREAKAWAY	:	
UNMANNED AREIAL VEHICLE (UAV)	:	
	:	

This is a decision on the petition under 37 CFR 1.48, filed December 12, 2006, supplemented by a communication filed May 29, 2007. In view of the fact that the patent has already issued, the request under 37 CFR 1.48 has been treated as a petition to correct inventorship under 37 CFR 1.324.

The petition is granted.

The patented file is being forwarded to Certificate of Corrections Branch for issuance of a certificate naming only the actual inventor or inventors.

Teri P. Luu
Supervisory Patent Examiner
Art Unit 3644
Technology Center 3600

JACOBSON HOLMAN PLLC
400 SEVENTH STREET N.W.
SUITE 600
WASHINGTON, DC 20004

UNITED STATES PATENT AND TRADEMARK OFFICE

COMMISSIONER FOR PATENTS
UNITED STATES PATENT AND TRADEMARK OFFICE
WASHINGTON, DC 20231
www.uspto.gov

Paper No. 20070126

MAILED FROM
DIRECTORS OFFICE
JAN 2 6 2007
TECHNOLOGY CENTER 2800

PILLSBURY WINTHROP SHAW PITTMAN, LLP
P.O. BOX 10500
MCLEAN VA 22102

In re App:	Dierichs *et al.*	:	DECISION ON PEITION FILED
Ser. No.:	10/976,158	:	September 27, 2006
Filing Date:	October 29, 2004	:	
For:	OPTICAL COMPONENT, OPTICAL SYSTEM INCLUDING SUCH AN OPTICAL COMPONENT, LITHOGRAPHIC APPARATUS, METHOD OF CORRECTING APODIZATION IN AN OPTICAL SYSTEM, DEVICE MANUFACTURING METHOD, AND DEVICE MANUFACTURED THEREBY	:	

Petitioner filed a petition on September 27, 2006, under 37 C.F.R. § 1.144 to withdraw the restriction requirement and rejoin claims 13 and 15-18 based on an improper restriction and that the stated allowable subject matter is also found in the restricted claims, *supra*.

The petition has been **dismissed** as being moot based on the Supplemental Notice of Allowance mailed December 28, 2006, wherein the aforementioned claims 13 and 15-18 where rejoined and subsequently allowed.

Janice A. Falcone

Janice A. Falcone, Director
Technology Center 2800
Semiconductors, Electrical and Optical
Systems and Components

UNITED STATES PATENT AND TRADEMARK OFFICE

Commissioner for Patents
United States Patent and Trademark Office
P.O. Box 1450
Alexandria, VA 22313-1450
www.uspto.gov

FEB 6 2006

SUGHRUE MION, PLLC
2100 PENNSYLVANIA AVENUE, N.W.
SUITE 800
WASHINGTON DC 20037

In re Application of:	:	
Sakata	:	NOTICE OF WITHDRAWAL
Serial No.: 10/976,176	:	FROM ISSUE
Filed: October 29, 2004	:	UNDER 37 CFR § 1.313
Attorney Docket No.: **Q84339**	:	

The purpose of this communication is to inform you that the above-identified application is being withdrawn from issue pursuant to 37 CFR § 1.313.

The above-identified application is hereby withdrawn from issue. The Notice of Allowance and Issue Fee Due and the Notice of Allowability mailed on December 2, 2005, are hereby vacated.

The application is being withdrawn to permit reopening of prosecution. The reasons will be communicated to you by the examiner.

Upon receipt of a new Notice of Allowance and Issue Fee Due, applicant may request that any previously submitted issue fee be applied toward payment of the issue fee in the amount identified on the new Notice of Allowance and Issue Fee Due. If the application is abandoned, applicant may request either a refund, or a credit to a Deposit Account.

Telephone inquires should be directed to Dean Reichard at (571) 272-2800, ext 31.

The above-identified application is being forwarded to the examiner for prompt appropriate action.

Richard K. Seidel, Director
Technology Center 2800
Semiconductors, Electrical and Optical
Systems and Components

OIPE IAP44
MAY 17 2007
PATENT & TRADEMARK OFFICE

IN THE UNITED STATES PATENT AND TRADEMARK OFFICE

In re Patent of: Iwashiro, Masafumi

Patent No.: 7,061,710 B2

Appln. No.: 10/976,177

Issued: June 13, 2006

Filed: October 29, 2004

Group Art Unit: 2627

Examiner: Jason C. Olson

FOR: METHOD AND APPARATUS FOR POSITIONING A HEAD IN A DISK DRIVE WITH SERVO WRITING FUNCTION

* * * *

May 17, 2007

REQUEST FOR CERTIFICATE OF CORRECTION
UNDER 35 U.S.C. §255 AND PURSUANT
TO 37 C.F.R. §1.323

Certificate
MAY 23 2007
of Correction

Commissioner for Patents
Post Office Box 1450
Alexandria, VA 22313-1450

Sir:

It is respectfully requested that a Certificate of Correction be issued in the subject patent for mistakes made by Applicant.

Attached are two properly completed Certificate of Correction Forms PTO-1050 showing the needed corrections. It is requested that these forms be certified by the Commissioner, with one form being returned to the undersigned.

Since these mistakes were made by Applicant, and in accordance with 37 C.F.R. § 1.20(a), the undersigned authorizes the charging of $100.00 to Deposit Account No. 03-3975 under order number 008312-0312979. A duplicate copy of this request is enclosed.

Respectfully submitted,

PILLSBURY WINTHROP SHAW PITTMAN LLP

By: Eric Compston REG No. 54,806
for

E. Rico Hernandez
Reg. No.: 47641
Tel. No.: (703) 770-7900
Fax No.: (703) 770-7901

Attachment: Form PTO-1050 in duplicate

Post Office Box 10500
McLean, VA 22102
(703) 770-7900
Customer No. 00909

05/18/2007 YPOLITE1 00000080 033975 7061710
01 FC:1811 100.00 DA

MAY 23 2007

APPROVED: /JO/

PTO/SB/44 (04-05)
Approved for use through 04/30/2007. OMB 0651-0033
U.S. Patent and Trademark Office; U.S. DEPARTMENT OF COMMERCE
Under the Paperwork Reduction Act of 1995, no persons are required to respond to a collection of information unless it displays a valid OMB control number.
(Also Form PTO-1050)

UNITED STATES PATENT AND TRADEMARK OFFICE
CERTIFICATE OF CORRECTION

PATENT NO. :7061710

APPLICATION NO.: 10/976,177

ISSUE DATE :June 13, 2006

INVENTOR(S) : MASAFUMI IWASHIRO

It is certified that an error appears or errors appear in the above-identified patent and that said Letters Patent is hereby corrected as shown below:

Figure 2

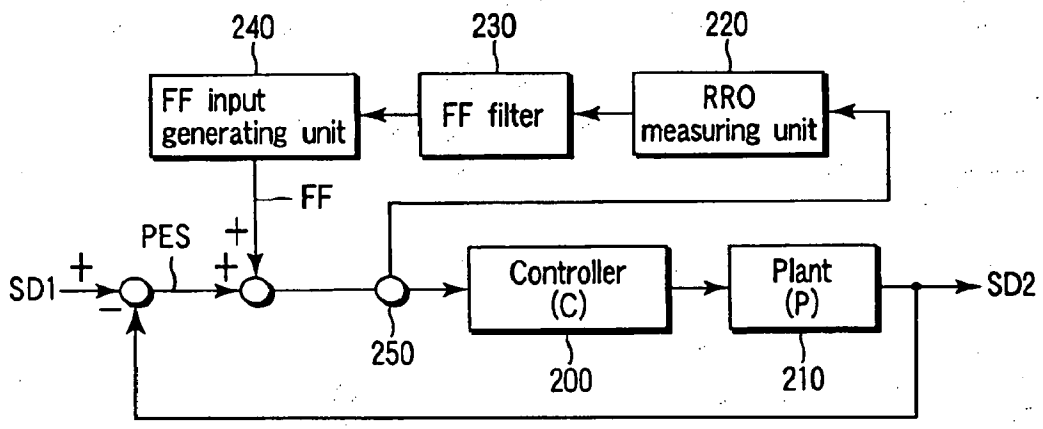

FIG. 2

MAILING ADDRESS OF SENDER (Please do not use customer number below):
P. O. Box 10500
McLean, VA 22102

This collection of information is required by 37 CFR 1.322, 1.323, and 1.324. The information is required to obtain or retain a benefit by the public which is to file (and by the USPTO to process) an application. Confidentiality is governed by 35 U.S.C. 122 and 37 CFR 1.14. This collection is estimated to take 1.0 hour to complete, including gathering, preparing, and submitting the completed application form to the USPTO. Time will vary depending upon the individual case. Any comments on the amount of time you require to complete this form and/or suggestions for reducing this burden, should be sent to the Chief Information Officer, U.S. Patent and Trademark Office, U.S. Department of Commerce, P.O. Box 1450, Alexandria, VA 22313-1450. DO NOT SEND FEES OR COMPLETED FORMS TO THIS ADDRESS. SEND TO: **Attention Certificate of Corrections Branch, Commissioner for Patents, P.O. Box 1450, Alexandria, VA 22313-1450.**

If you need assistance in completing the form, call 1-800-PTO-9199 and select option 2.

MAY 23 2007

SPE RESPONSE FOR CERTIFICATE OF CORRECTION

DATE : 4309 Paper No.: _____

TO SPE OF : ART UNIT 2627

SUBJECT : Request for Certificate of Correction for Appl. No.: 10/076177 Patent No.: 7061710

Please respond to this request for a certificate of correction within 7 days.

FOR IFW FILES:

Please review the requested changes/corrections as shown in the **COCIN** document(s) in the IFW application image. No new matter should be introduced, nor should the scope or meaning of the claims be changed.

Please complete the response (see below) and forward the completed response to scanning using document code **COCX.**

FOR PAPER FILES:

Please review the requested changes/corrections as shown in the attached certificate of correction. Please complete this form (see below) and forward it with the file to:

Certificates of Correction Branch (CofC)
South Tower - 9A22
Palm Location 7580

E Wu

Certificates of Correction Branch
703-308-9390 ext. 117

Thank You For Your Assistance

The request for issuing the above-identified correction(s) is hereby:
Note your decision on the appropriate box.

- ☑ **Approved** — **All** changes apply.
- ☐ **Approved in Part** — Specify below which changes **do not** apply.
- ☐ **Denied** — State the reasons for denial below.

Comments: _____

/Wayne Young/ 2627

SPE **Art Unit**

UNITED STATES PATENT AND TRADEMARK OFFICE

Commissioner for Patents
United States Patent and Trademark Office
P.O. Box 1450
Alexandria, VA 22313-1450
www.uspto.gov
DIW Jul-05

FOLEY AND LARDNER
SUITE 500
3000 K STREET NW
WASHINGTON DC 20007

COPY MAILED

JUL 14 2005

OFFICE OF PETITIONS

In re Application of	:	
Belcher, Mao, and Solis	:	
Application No. 10/976,179	:	DECISION ACCORDING STATUS
Filed: 29 October, 2004	:	UNDER 37 CFR 1.47(a)
Atty Docket No. 027053-0146	:	

This is in response to the petition filed under 37 CFR 1.47(a) on 17 June, 2005.

The petition is **GRANTED**.

Petitioners have shown that the non-signing inventor, Chuanbin Mao, has refused to sign the declaration after having been sent a copy of the application papers. Specifically, petitioners have shown that a letter dated 25 May, 2005, accompanied by a copy of the application as filed, was sent to the last known address of the non-signing joint inventor. However, the inventor failed to sign and return the declaration naming him as a joint inventor along with Angela M. Belcher and Daniel J. Solis.

The above-identified application and papers have been reviewed and found in compliance with 37 CFR 1.47(a). This application is hereby accorded Rule 1.47(a) status.

As provided in Rule 1.47(c), this Office will forward notice of this application's filing to the non-signing inventor at the address given in the in the petition, not the declaration. Notice of the filing of this application will also be published in the *Official Gazette*.

The application is being referred to Technology Center 1774 for examination in due course.

Telephone inquiries related to this decision should be directed to the undersigned at 571-272-3231.

D Wood

Douglas I. Wood
Senior Petitions Attorney
Office of Petitions

UNITED STATES PATENT AND TRADEMARK OFFICE

Commissioner for Patents
United States Patent and Trademark Office
P.O. Box 1450
Alexandria, VA 22313-1450
www.uspto.gov

Chuanbin Mao
2314 Parker Lane #8
Austin TX 78741

COPY MAILED

JUL 14 2005

OFFICE OF PETITIONS

In re Application of
Belcher et al.
Application No. 10/976,179
Filed: 29 October, 2004
For: INORGANIC NANOWIRES

Dear Mr. Mao:

You are named as a joint inventor in the above identified United States patent application, filed under the provisions of 35 U.S.C. 116 (United States Code), and 37 CFR 1.47(a), Rules of Practice in Patent Cases. Should a patent be granted on the application you will be designated therein as a joint inventor.

As a named inventor you are entitled to inspect any paper in the file wrapper of the application, order copies of all or any part thereof (at a prepaid cost per 37 CFR 1.19) or make your position of record in the application. Alternatively, you may arrange to do any of the preceding through a registered patent attorney or agent presenting written authorization from you. If you care to join the application, counsel of record (see below) would presumably assist you. Joining in the application would entail the filing of an appropriate oath or declaration by you pursuant to 37 CFR 1.63.

Telephone inquiries regarding this communication should be directed to the undersigned at 571/272-3231. Requests for information regarding your application should be directed to the File Information Unit at 703/308-2733. Information regarding how to pay for and order a copy of the application, or a specific paper in the application, should be directed to Certification Division at 703/308-9726 or 1-800-972-6382 (outside the Washington D.C. area).

D Wood

Douglas I. Wood
Senior Petitions Attorney
Office of Petitions

FOLEY AND LARDNER
SUITE 500
3000 K STREET NW
WASHINGTON DC 20007

UNITED STATES PATENT AND TRADEMARK OFFICE

UNITED STATES DEPARTMENT OF COMMERCE
United States Patent and Trademark Office
Address: COMMISSIONER FOR PATENTS
P.O. Box 1450
Alexandria, Virginia 22313-1450
www.uspto.gov

GREENLEE WINNER AND SULLIVAN P C
4875 PEARL EAST CIRCLE
SUITE 200
BOULDER, CO 80301

Mail Date: 05/20/2010

Applicant	: Paul J. Hergenrother	: DECISION ON REQUEST FOR
Patent Number	: 7632972	: RECALCULATION of PATENT
Issue Date	: 12/15/2009	: TERM ADJUSTMENT IN VIEW
Application No	: 10/976,186	: OF WYETH AND NOTICE OF INTENT TO
Filed	: 10/27/2004	: ISSUE CERTIFICATE OF CORRECTION
		:

The Request for Recalculation is **GRANTED** to the extent indicated.

The patent term adjustment has been determined to be **373** days. The USPTO will *sua sponte* issue a certificate of correction reflecting the amount of PTA days determined by the recalculation.

Prior to the issuance of the certificate of correction, the USPTO will afford patentee an opportunity to be heard and request reconsideration. Accordingly, patentee has **one month or thirty (30) days**, whichever is longer, to file a request for reconsideration of this patent term adjustment calculation. See 35 U.S.C. 154(b)(3)(B)(ii) and 37 CFR 1.322(a)(4). No extensions of time will be granted under 37 CFR 1.136.

Patentee should use document code PET.OP if electronically filing a request for reconsideration of this patent term adjustment calculation. The patentee must also include the information required by 37 CFR 1.705(b)(2) and the fee required by 37 CFR 1.18(e). If patentee does not file a timely request for reconsideration of this patent term adjustment calculation including the information required by 37 CFR 1.705(b)(2) and the fee required by 37 CFR 1.18(e), the USPTO will issue a certificate of correction reflecting the PTA determination noted above.

Patentee should be aware that in order to preserve the right to review in the United States District Court for the District of Columbia of the USPTO patent term adjustment determination, patentee must ensure that he or she also take the steps required under 35 U.S.C. 154(b)(4)(A) in a timely manner. Nothing in the request for recalculation should be construed as providing an alternative time frame for commencing a civil action under 35 U.S.C. 154(b)(4)(A).

Any questions concerning this decision should be directed to the Office of Patent Legal Administration at 571-272-7702.

UNITED STATES PATENT AND TRADEMARK OFFICE

COMMISSIONER FOR PATENTS
UNITED STATES PATENT AND TRADEMARK OFFICE
P.O. BOX 1450
ALEXANDRIA, VA 22313-1450
www.uspto.gov

MCHALE & SLAVIN, P.A.
2855 PGA BLVD
PALM BEACH GARDENS, FL 33410

COPY MAILED
NOV 25 2005
OFFICE OF PETITIONS

In re Application of	:	
Robert L. Diaz et al	:	
Application No. 10/976,192	:	DECISION ON PETITION
Filed: October 27, 2004	:	TO MAKE SPECIAL UNDER
Attorney Docket No. 2385U.015	:	37 CFR 1.102(c)(1)
	:	

This is a decision on the petition under 37 CFR 1.102(c)(1), filed October 19, 2005, to make the above-identified application special based on applicant's age as set forth in M.P.E.P. § 708.02, Section IV.

The petition is **DISMISSED** due to the face that applicant Robert L. Diaz is only 64 years of age.

A grantable petition to make an application special under 37 CFR 1.102(c)(1) and MPEP § 708.02, Section IV: Applicant's Age, must be accompanied by evidence showing that at least one of the applicants is 65 years of age, or more, such as a birth certificate or a statement by applicant. No fee is required.

Further correspondence with respect to this matter should be addressed as follows:

By Mail: Mail Stop PETITION
Commissioner for Patents
P. O. Box 1450
Alexandria, VA 22313-1450

By hand: U. S. Patent and Trademark Office
Customer Service Window, Mail Stop Petitions
Randolph Building
401 Dulany Street
Alexandria, VA 22314

By FAX: (571) 273-8300

Telephone inquiries concerning this decision should be directed to Wan Laymon at 571-272-3220.

All other inquiries concerning either the examination or status of the application should be directed to the Technology Center.

This matter is being referred to Technology Center Art Unit 3738 for action in its regular turn.

David Bucci
Petitions Examiner
Office of Petitions

UNITED STATES PATENT AND TRADEMARK OFFICE

Commissioner for Patents
United States Patent and Trademark Office
P.O. Box 1450
Alexandria, VA 22313-1450
www.uspto.gov

BROMBERG & SUNSTEIN LLP
125 SUMMER STREET
BOSTON, MA 02110-1618

COPY MAILED

NOV 29 2005

OFFICE OF PETITIONS

In re Application of	:
Lorraine Flynn et al	:
Application No. 10/976,195	: DECISION GRANTING PETITION
Filed: October 27, 2004	: UNDER 37 CFR 1.313(c)(2)
Attorney Docket No. 0301/110	:

This is a decision on the petition, filed November 23, 2005, under 37 CFR 1.313(c)(2) to withdraw the above-identified application from issue after payment of the issue fee.

The petition is **GRANTED**.

The above-identified application is withdrawn from issue for consideration of a submission under 37 CFR 1.114 (request for continued examination). See 37 CFR 1.313(c)(2).

Petitioner is advised that the issue fee paid on September 28,2 005 in the above-identified application cannot be refunded. If, however, the above-identified application is again allowed, petitioner may request that it be applied towards the issue fee required by the new Notice of Allowance.[1]

Telephone inquiries should be directed to the undersigned at (571) 272-3218.

This matter is being referred to Technology Center AU 3661 for processing of the request for continued examination under 37 CFR 1.114 and for consideration of the concurrently filed amendment.

Frances Hicks
Petitions Examiner
Office of Petitions

---

[1] *The request to apply the issue fee to the new Notice may be satisfied by completing and returning the new Issue Fee Transmittal Form PTOL-85(b) (along with any balance due at the time of payment), which includes the following language thereon: "Commissioner for Patents is requested to apply the Issue Fee and Publication Fee (if any) or re-apply any previously paid issue fee to the application identified above." Petitioner is advised that, whether a fee is indicated as being due or not, the Issue Fee Transmittal Form* ***must*** *be completed and timely submitted to avoid abandonment. Note the language in bold text on the first page of the Notice of Allowance and Fee(s) Due (PTOL-85).*

UNITED STATES PATENT AND TRADEMARK OFFICE

UNITED STATES DEPARTMENT OF COMMERCE
United States Patent and Trademark Office
Address: COMMISSIONER FOR PATENTS
P.O. Box 1450
Alexandria, Virginia 22313-1450
www.uspto.gov

SEMICONDUCTOR COMPONENTS INDUSTRIES, LLC
INTELLECTUAL PROPERTY DEPT. - A700
5005 E. MCDOWELL ROAD, P.O.BOX 62890
PHOENIX, AZ 85082

Mail Date: 04/20/2010

Applicant	: Tod F. Schiff	: DECISION ON REQUEST FOR
Patent Number	: 7592718	: RECALCULATION of PATENT
Issue Date	: 09/22/2009	: TERM ADJUSTMENT IN VIEW
Appliction No	: 10/976,196	: OF WYETH AND NOTICE OF INTENT TO
Filed	: 10/26/2004	: ISSUE CERTIFICATE OF CORRECTION
		:

The Request for Recalculation is **GRANTED** to the extent indicated.

The patent term adjustment has been determined to be **559** days. The USPTO will *sua sponte* issue a certificate of correction reflecting the amount of PTA days determined by the recalculation.

Prior to the issuance of the certificate of correction, the USPTO will afford patentee an opportunity to be heard and request reconsideration. Accordingly, patentee has **one month or thirty (30) days**, whichever is longer, to file a request for reconsideration of this patent term adjustment calculation. See 35 U.S.C. 154(b)(3)(B)(ii) and 37 CFR 1.322(a)(4). No extensions of time will be granted under 37 CFR 1.136.

Patentee should use document code PET.OP if electronically filing a request for reconsideration of this patent term adjustment calculation. The patentee must also include the information required by 37 CFR 1.705(b)(2) and the fee required by 37 CFR 1.18(e). If patentee does not file a timely request for reconsideration of this patent term adjustment calculation including the information required by 37 CFR 1.705(b)(2) and the fee required by 37 CFR 1.18(e), the USPTO will issue a certificate of correction reflecting the PTA determination noted above.

Patentee should be aware that in order to preserve the right to review in the United States District Court for the District of Columbia of the USPTO patent term adjustment determination, patentee must ensure that he or she also take the steps required under 35 U.S.C. 154(b)(4)(A) in a timely manner. Nothing in the request for recalculation should be construed as providing an alternative time frame for commencing a civil action under 35 U.S.C. 154(b)(4)(A).

Any questions concerning this decision should be directed to the Office of Patent Legal Administration at 571-272-7702.

UNITED STATES PATENT AND TRADEMARK OFFICE

Commissioner for Patents
United States Patent and Trademark Office
P.O. Box 1450
Alexandria, VA 22313-1450
www.uspto.gov

THOMAS J. DODD
SENIOR PATENT COUNSEL
BIONUMERIK PHARMACEUTICALS, INC.
8122 DATAPOINT DRIVE, SUITE 1250
SAN ANTONIO TX 78229

COPY MAILED

SEP 11 2008

In re Application of
Frederick H. Hausheer et al. :
Application No. 10/976,203 : ON PETITION
Filed: October 28, 2004 :
Attorney Docket No: X-0241 :

This is a decision on the petition to withdraw the holding of abandonment, filed July 31, 2008, under 37 CFR 1.181, in accordance with the reasoning of the decision in Delgar Inc. v. Schuyler, 172 USPQ 513.

The petition is **GRANTED**.

This application became abandoned on November 14, 2007, for failure to file a timely response to the Office Communication mailed October 11, 2007, which set a period of the longer of one month or 30 days for reply. Accordingly, the Notice of Abandonment was mailed May 28, 2008.

The file record discloses that the Office Communication was mailed to the address of record which is the same address used on all correspondences from the USPTO. Petitioner has provided a copy of the docket report, wherein receipt of the Office Communication mailed October 11, 2007 would have been filed, had it been received. To show that the Office Communication mailed October 11, 2007 was not received, petitioner also explains that after searching the docket it was concluded that no correspondence was received for this matter from the USPTO,

In that the statement from the petitioner and the exhibit from the docket record for the instant matter show no entry indicating receipt of the Office Communication mailed October 11, 2007, it is apparent that it was not received. The evidence submitted corroborates non-receipt of the Office Communication.

In view of the facts set forth in the petition, it is concluded that the Office Communication was never received at the address of record. Accordingly, the holding of abandonment is withdrawn and no petition fee is due.

This matter is being referred to Technology Center 1614 for a re-mailing of the Office Communication originally mailed October 11, 2007 and for a restarting of the period for response.

Telephone inquiries concerning this matter should be directed to the undersigned Petitions Attorney at (571) 272-3212.

Patricia Faison-Ball

Patricia Faison-Ball
Senior Petitions Attorney
Office of Petitions

UNITED STATES PATENT AND TRADEMARK OFFICE

UNITED STATES DEPARTMENT OF COMMERCE
United States Patent and Trademark Office
Address: COMMISSIONER FOR PATENTS
P.O. Box 1450
Alexandria, Virginia 22313-1450
www.uspto.gov

IBM CORPORATION
INTELLECTUAL PROPERTY LAW
11501 BURNET ROAD
AUSTIN, TX 78758

Mail Date: 04/20/2010

Applicant	: Timothy William Banks	: DECISION ON REQUEST FOR
Patent Number	: 7627867	: RECALCULATION of PATENT
Issue Date	: 12/01/2009	: TERM ADJUSTMENT IN VIEW
Appliction No	: 10/976,207	: OF WYETH AND NOTICE OF INTENT TO
Filed	: 10/28/2004	: ISSUE CERTIFICATE OF CORRECTION
		:

The Request for Recalculation is **GRANTED** to the extent indicated.

The patent term adjustment has been determined to be **1430** days. The USPTO will *sua sponte* issue a certificate of correction reflecting the amount of PTA days determined by the recalculation.

Prior to the issuance of the certificate of correction, the USPTO will afford patentee an opportunity to be heard and request reconsideration. Accordingly, patentee has **one month or thirty (30) days**, whichever is longer, to file a request for reconsideration of this patent term adjustment calculation. See 35 U.S.C. 154(b)(3)(B)(ii) and 37 CFR 1.322(a)(4). No extensions of time will be granted under 37 CFR 1.136.

Patentee should use document code PET.OP if electronically filing a request for reconsideration of this patent term adjustment calculation. The patentee must also include the information required by 37 CFR 1.705(b)(2) and the fee required by 37 CFR 1.18(e). If patentee does not file a timely request for reconsideration of this patent term adjustment calculation including the information required by 37 CFR 1.705(b)(2) and the fee required by 37 CFR 1.18(e), the USPTO will issue a certificate of correction reflecting the PTA determination noted above.

Patentee should be aware that in order to preserve the right to review in the United States District Court for the District of Columbia of the USPTO patent term adjustment determination, patentee must ensure that he or she also take the steps required under 35 U.S.C. 154(b)(4)(A) in a timely manner. Nothing in the request for recalculation should be construed as providing an alternative time frame for commencing a civil action under 35 U.S.C. 154(b)(4)(A).

Any questions concerning this decision should be directed to the Office of Patent Legal Administration at 571-272-7702.

UNITED STATES PATENT AND TRADEMARK OFFICE

Commissioner for Patents
United States Patent and Trademark Office
P.O. Box 1450
Alexandria, VA 22313-1450
www.uspto.gov

MAY 13 2005

DAN M. DE LA ROSA
SUITE 27H
345 EAST 80TH STREET
NEW YORK NY 10021

In re Application of	:	
John S. Lee et al	:	
Serial No.: 10/976,220	:	DECISION ON
Filed: October 28, 2004	:	PETITON TO MAKE SPECIAL
For: Hair Extension Apparatus and Related	:	
Methods	:	

This is in response to applicants' petition filed November 26, 2004, to make the above-identified application special under the provisions of 37 CFR 1.102(d), based on infringement.

Applicant has satisfied the provisions set forth in M.P.E.P. 708.02, II. Therefore the petition is **GRANTED**.

The application will be forwarded to the examiner for action on the merits commensurate with this decision.

Should there be any questions with regard to this letter please contact Richard Bertsch by letter addressed to the Director, Technology Center 3700, or by telephone at (571) 272-3750 or by facsimile transmission at (703) 872-9306.

Richard A. Bertsch

Richard A. Bertsch, Director
Technology Center 3700

UNITED STATES PATENT AND TRADEMARK OFFICE

Commissioner for Patents
United States Patent and Trademark Office
P.O. Box 1450
Alexandria, VA 22313-1450
www.uspto.gov

In re Patent No. 6924922
Issue Date: August 2,2005
Application No. 10976232
Filed: October 26,2004
Attorney Docket No. 200308966-6

:
:DECISION GRANTING PETITION
:UNDER 37 CFR 1.378(c)
:

This is a decision on the electronic petition, filed December 22,2009 ,under 37 CFR 1.378(c) to accept the unintentionally delayed payment of the 3.5 year maintenance fee for the above-identified patent.

The petition is **GRANTED**.

The maintenance fee is accepted, and the above-identified patent reinstated as of December 22,2009 . This decision also constitutes notice that the fee has been accepted. An electronic copy of the petition and this decision has been created as an entry in the Image File Wrapper. Nevertheless, petitioner should print and retain an independent copy.

Telephone inquiries related to this electronic decision should be directed to the Electronic Business Center at 1-866-217-9197.

PTO/SB/66 (03-09)
Approved for use through 03/31/2012. OMB 0651-0016
U.S. Patent and Trademark Office: U.S. DEPARTMENT OF COMMERCE
Under the Paperwork Reduction Act of 1995, no persons are required to respond to a collection of information unless it displays valid OMB control number.

PETITION TO ACCEPT UNINTENTIONALLY DELAYED PAYMENT OF MAINTENANCE FEE IN AN EXPIRED PATENT (37 CFR 1.378(c))

Patent Number	Issue Date (YYYY-MM-DD)	Application Number	Filing Date (YYYY-MM-DD)	Docket Number (if applicable)
6924922	2005-08-02	10/976,232	2004-10-26	252011-4480

CAUTION: Maintenance fee (and surcharge, if any) payment must correctly identify: (1) the patent number and (2) the application number of the actual U.S. application leading to issuance of that patent to ensure the fee(s) is/are associated with the correct patent. 37 CFR 1.366(c) and (d).

SMALL ENTITY
☐ Patentee claims, or has previously claimed, small entity status. See 37 CFR 1.27.

LOSS OF ENTITLEMENT TO SMALL ENTITY STATUS
☐ Patentee is no longer entitled to small entity status. See 37 CFR 1.27(g)

NOT Small Entity		Small Entity	
Fee	Code	Fee	Code
◉ 3 ½ year	(1551)	○ 3 ½ year	(2551)
○ 7 ½ year	(1552)	○ 7 ½ year	(2552)
○ 11 ½ year	(1553)	○ 11 ½ year	(2553)

SURCHARGE
The surcharge required by 37 CFR 1.20(i)(2) (Fee Code 1558) must be paid as a condition of accepting unintentionally delayed payment of the maintenance fee.

MAINTENANCE FEE (37 CFR 1.20(e)-(g))
The appropriate maintenance fee must be submitted with this petition.

STATEMENT
THE UNDERSIGNED CERTIFIES THAT THE DELAY IN PAYMENT OF THE MAINTENANCE FEE TO THIS PATENT WAS UNINTENTIONAL

PETITIONER(S) REQUEST THAT THE DELAYED PAYMENT OF THE MAINTENANCE FEE BE ACCEPTED AND THE PATENT REINSTATED

THIS PORTION MUST BE COMPLETED BY THE SIGNATORY OR SIGNATORIES

37 CFR 1.378(d) states: "Any petition under this section must be signed by an attorney or agent registered to practice before the Patent and Trademark Office, or by the patentee, the assignee, or other party in interest."

I certify, in accordance with 37 CFR 1.4(d)(4) that I am

◉ An attorney or agent registered to practice before the Patent and Trademark Office

○ A sole patentee

○ A joint patentee; I certify that I am authorized to sign this submission on behalf of all the other patentees.

○ A joint patentee; all of whom are signing this e-petition

○ The assignee of record of the entire interest

Patent Practitioner			
A signature of the applicant or representative is required in accordance with 37 CFR 1.33 and 10.18. Please see 37 CFR 1.4(d) for the form of the signature			
Signature	/Daniel R. McClure/	Date (YYYY-MM-DD)	2009-12-22
Name	Daniel R. McClure	Registration Number	38962

This collection of information is required by 37 CFR 1.378(c). The information is required to obtain or retain a benefit by the public which is to file (and by the USPTO to process) an application. Confidentiality is governed by 35 U.S.C. 122 and 37 CFR 1.11 and 1.14. This collection is estimated to take 1 hour to complete, including gathering, preparing, and submitting the completed application form to the USPTO. Time will vary depending upon the individual case. Any comments on the amount of time you require to complete this form and/ or suggestions for reducing this burden, should be sent to the Chief Information Officer, U.S. Patent and Trademark Office, U.S. Department of Commerce, P.O. Box 1450, Alexandria, VA 22313-1450. DO NOT SEND FEES OR COMPLETED FORMS TO THIS ADDRESS. **This form can only be used when in conjunction with EFS-Web. If this form is mailed to the USPTO, it may cause delays in reinstating the patent.**

Privacy Act Statement

The Privacy Act of 1974 (P.L. 93-579) requires that you be given certain information in connection with your submission of the attached form related to a patent application or patent. Accordingly, pursuant to the requirements of the Act, please be advised that: (1) the general authority for the collection of this information is 35 U.S.C. 2(b)(2); (2) furnishing of the information solicited is voluntary; and (3) the principal purpose for which the information is used by the U.S. Patent and Trademark Office is to process and/or examine your submission related to a patent application or patent. If you do not furnish the requested information, the U.S. Patent and Trademark Office may not be able to process and/or examine your submission, which may result in termination of proceedings or abandonment of the application or expiration of the patent.

The information provided by you in this form will be subject to the following routine uses:

1. The information on this form will be treated confidentially to the extent allowed under the Freedom of Information Act (5 U.S.C. 552) and the Privacy Act (5 U.S.C. 552a). Records from this system of records may be disclosed to the Department of Justice to determine whether the Freedom of Information Act requires disclosure of these records.

2. A record from this system of records may be disclosed, as a routine use, in the course of presenting evidence to a court, magistrate, or administrative tribunal, including disclosures to opposing counsel in the course of settlement negotiations.

3. A record in this system of records may be disclosed, as a routine use, to a Member of Congress submitting a request involving an individual, to whom the record pertains, when the individual has requested assistance from the Member with respect to the subject matter of the record.

4. A record in this system of records may be disclosed, as a routine use, to a contractor of the Agency having need for the information in order to perform a contract. Recipients of information shall be required to comply with the requirements of the Privacy Act of 1974, as amended, pursuant to 5 U.S.C. 552a(m).

5. A record related to an International Application filed under the Patent Cooperation Treaty in this system of records may be disclosed, as a routine use, to the International Bureau of the World Intellectual Property Organization, pursuant to the Patent Cooperation Treaty.

6. A record in this system of records may be disclosed, as a routine use, to another federal agency for purposes of National Security review (35 U.S.C. 181) and for review pursuant to the Atomic Energy Act (42 U.S.C. 218(c)).

7. A record from this system of records may be disclosed, as a routine use, to the Administrator, General Services, or his/her designee, during an inspection of records conducted by GSA as part of that agency's responsibility to recommend improvements in records management practices and programs, under authority of 44 U.S.C. 2904 and 2906. Such disclosure shall be made in accordance with the GSA regulations governing inspection of records for this purpose, and any other relevant (i.e., GSA or Commerce) directive. Such disclosure shall not be used to make determinations about individuals.

8. A record from this system of records may be disclosed, as a routine use, to the public after either publication of the application pursuant to 35 U.S.C. 122(b) or issuance of a patent pursuant to 35 U.S.C. 151. Further, a record may be disclosed, subject to the limitations of 37 CFR 1.14, as a routine use, to the public if the record was filed in an application which became abandoned or in which the proceedings were terminated and which application is referenced by either a published application, an application open to public inspections or an issued patent.

9. A record from this system of records may be disclosed, as a routine use, to a Federal, State, or local law enforcement agency, if the USPTO becomes aware of a violation or potential violation of law or regulation.

UNITED STATES PATENT AND TRADEMARK OFFICE

UNITED STATES DEPARTMENT OF COMMERCE
United States Patent and Trademark Office
Address: COMMISSIONER FOR PATENTS
P.O. Box 1450
Alexandria, Virginia 22313-1450
www.uspto.gov

HOWREY LLP
C/O IP DOCKETING DEPARTMENT
2941 FAIRVIEW PARK DRIVE, SUITE 200
FALLS CHURCH, VA 22042-2924

Mail Date: 04/21/2010

Applicant	: Haiyan Gu	: DECISION ON REQUEST FOR
Patent Number	: 7572394	: RECALCULATION of PATENT
Issue Date	: 08/11/2009	: TERM ADJUSTMENT IN VIEW
Appliction No	: 10/976,244	: OF WYETH AND NOTICE OF INTENT TO
Filed	: 10/27/2004	: ISSUE CERTIFICATE OF CORRECTION
		:

The Request for Recalculation is **GRANTED** to the extent indicated.

The patent term adjustment has been determined to be **622** days. The USPTO will *sua sponte* issue a certificate of correction reflecting the amount of PTA days determined by the recalculation.

Prior to the issuance of the certificate of correction, the USPTO will afford patentee an opportunity to be heard and request reconsideration. Accordingly, patentee has **one month or thirty (30) days**, whichever is longer, to file a request for reconsideration of this patent term adjustment calculation. See 35 U.S.C. 154(b)(3)(B)(ii) and 37 CFR 1.322(a)(4). No extensions of time will be granted under 37 CFR 1.136.

Patentee should use document code PET.OP if electronically filing a request for reconsideration of this patent term adjustment calculation. The patentee must also include the information required by 37 CFR 1.705(b)(2) and the fee required by 37 CFR 1.18(e). If patentee does not file a timely request for reconsideration of this patent term adjustment calculation including the information required by 37 CFR 1.705(b)(2) and the fee required by 37 CFR 1.18(e), the USPTO will issue a certificate of correction reflecting the PTA determination noted above.

Patentee should be aware that in order to preserve the right to review in the United States District Court for the District of Columbia of the USPTO patent term adjustment determination, patentee must ensure that he or she also take the steps required under 35 U.S.C. 154(b)(4)(A) in a timely manner. Nothing in the request for recalculation should be construed as providing an alternative time frame for commencing a civil action under 35 U.S.C. 154(b)(4)(A).

Any questions concerning this decision should be directed to the Office of Patent Legal Administration at 571-272-7702.

UNITED STATES PATENT AND TRADEMARK OFFICE

UNITED STATES DEPARTMENT OF COMMERCE
United States Patent and Trademark Office
Address: COMMISSIONER FOR PATENTS
P.O. Box 1450
Alexandria, Virginia 22313-1450
www.uspto.gov

HARNESS, DICKEY & PIERCE, P.L.C.
P.O. BOX 828
BLOOMFIELD HILLS, MI 48303

Mail Date: 04/21/2010

Applicant	: Joel G. Marquart	: DECISION ON REQUEST FOR
Patent Number	: 7636595	: RECALCULATION of PATENT
Issue Date	: 12/22/2009	: TERM ADJUSTMENT IN VIEW
Appliction No	: 10/976,328	: OF WYETH AND NOTICE OF INTENT TO
Filed	: 10/28/2004	: ISSUE CERTIFICATE OF CORRECTION
		:

The Request for Recalculation is **GRANTED** to the extent indicated.

The patent term adjustment has been determined to be **837** days. The USPTO will *sua sponte* issue a certificate of correction reflecting the amount of PTA days determined by the recalculation.

Prior to the issuance of the certificate of correction, the USPTO will afford patentee an opportunity to be heard and request reconsideration. Accordingly, patentee has **one month or thirty (30) days**, whichever is longer, to file a request for reconsideration of this patent term adjustment calculation. See 35 U.S.C. 154(b)(3)(B)(ii) and 37 CFR 1.322(a)(4). No extensions of time will be granted under 37 CFR 1.136.

Patentee should use document code PET.OP if electronically filing a request for reconsideration of this patent term adjustment calculation. The patentee must also include the information required by 37 CFR 1.705(b)(2) and the fee required by 37 CFR 1.18(e). If patentee does not file a timely request for reconsideration of this patent term adjustment calculation including the information required by 37 CFR 1.705(b)(2) and the fee required by 37 CFR 1.18(e), the USPTO will issue a certificate of correction reflecting the PTA determination noted above.

Patentee should be aware that in order to preserve the right to review in the United States District Court for the District of Columbia of the USPTO patent term adjustment determination, patentee must ensure that he or she also take the steps required under 35 U.S.C. 154(b)(4)(A) in a timely manner. Nothing in the request for recalculation should be construed as providing an alternative time frame for commencing a civil action under 35 U.S.C. 154(b)(4)(A).

Any questions concerning this decision should be directed to the Office of Patent Legal Administration at 571-272-7702.

UNITED STATES PATENT AND TRADEMARK OFFICE

Commissioner for Patents
United States Patent and Trademark Office
P.O. Box 1450
Alexandria, VA 22313-1450
www.uspto.gov

UNILEVER INTELLECTUAL PROPERTY GROUP
700 SYLVAN AVENUE,
BLDG C2 SOUTH
ENGLEWOOD CLIFFS NJ 07632-3100

COPY MAILED

JUL 1 8 2005

OFFICE OF PETITIONS

In re Application of	:	
Whited et al.	:	
Application No. 10/976,335	:	ON PETITION
Filed: October 28, 2004	:	
Attorney Docket No. UNUS #04-0145-UBNA	:	

This is a decision on the petition filed May 16, 2005, requesting that the above-identified application be accorded a filing date of October 28, 2004, rather than the presently accorded date of October 29, 2004. The petition is properly treated as a petition under 37 CFR 1.10(c).

Applicant requests the earlier filing date on the basis that the application was purportedly deposited with the U.S. Postal Service (USPS) as Express Mail on October 28, 2004, pursuant to 37 CFR 1.10. In support, applicant has submitted a copy of the USPS Pickup Service Statement, showing Express Mail receipt No. ER 414136525 US. However, the "date-in" on the document is illegible. The same Express Mail receipt number appears on the original "Transmittal for Patent Application," which includes the Express Mail label number. The Express Mail label number appears on the Certificate of Mailing by "Express Mail" and includes a statement of express mailing dated October 28, 2004 on the cover page for the application papers.

To further substantiate applicant's allegation that the application papers for this file were deposited on the requested filing date, an independent search was made of the USPS Express Mail Track and Confirm records which resulted in a finding that the package in question was in fact enroute on October 28, 2004, at the Carteret, NJ USPS.

Therefore, in view of all the evidence, it is concluded that the application was deposited in Express Mail service on October 28, 2004. Accordingly, the instant application is entitled to a filing date of October 28, 2004 and has been so accorded.

The petition is **GRANTED**.

A petition under 37 CFR 1.10(c) does not require a petition fee and none has been charged.

This matter is being referred to the Office of Initial Patent Examination Division for further **processing with a filing date of October 28, 2004, along with a corrected filing receipt.** Thereafter, the matter will be referred to Technology Center 1700 for examination in due course.

Telephone inquiries concerning this matter may be directed Paralegal Liana Chase at (571) 272-3206.

Frances Hicks

Frances Hicks
Petitions Examiner
Office of Petitions
Office of the Deputy Commissioner
For Patent Examination Policy

UNITED STATES PATENT AND TRADEMARK OFFICE

Commissioner for Patents
United States Patent and Trademark Office
P.O. Box 1450
Alexandria, VA 22313-1450
www.uspto.gov

JACKSON & CO., LLP
6114 LA SALLE AVENUE
#507
OAKLAND, CA 94611-2802

COPY MAILED

DEC 0 3 2007

OFFICE OF PETITIONS

In re Application of
STEINBERG, Eran et al.
Application No. 10/976,336
Filed: October 28, 2004
Attorney Docket No. **FN106**

DECISION ON PETITION
TO WITHDRAW
FROM RECORD

This is a decision on the Request to Withdraw as attorney or agent of record under 37 C.F.R. § 1.36(b), filed October 17, 2007.

The request is **NOT APPROVED** as moot.

A review of the file record indicates that the power of attorney to Jackson & Co., LLP has been revoked by the assignee of the patent application on October 22, 2007. Accordingly, the request to withdraw under 37 C.F.R. § 1.36(b) is moot.

All future communications from the Office will continue to be directed to the below-listed address until otherwise notified by applicant.

Telephone inquires concerning this decision should be directed to Michelle R. Eason at 571-272-4231.

Michelle R. Eason
Paralegal Specialist
Office of Petitions

cc: **FotoNation, Inc.**
IP Dept.
800 Airport Blvd.
Suite 522
Burlingame, CA 94010

SPE RESPONSE FOR CERTIFICATE OF CORRECTION

Paper No.: _____

DATE : September 15 ,2009

TO SPE OF : ART UNIT 2624

SUBJECT : Request for certificate of correction for Appln.no. 10/976336

Please respond to this request for a certificate of correction within 7 days.

FOR IFW FILES:

Please review the requested changes/corrections as shown in the **COCIN** document(s) in the IFW application image. No new matter should be introduced, nor should the scope or meaning of the claims be changed.

Please complete the response (see below) and forward the completed response to scanning using document code **COCX**.

FOR PAPER FILES:

Please review the requested changes/corrections as shown in the attached certificate of correction. Please complete this form (see below) and forward it with the file to:

Certificates of Correction Branch (CofC)
South Tower - 9A22
Palm Location 7580

Magdalene Talley
Certificates of Correction Branch
703-308-9390 ext. 120

Thank You For Your Assistance

The request for issuing the above-identified correction(s) is hereby:
Note your decision on the appropriate box.

- ☑ **Approved** — All changes apply.
- ☐ **Approved in Part** — Specify below which changes **do not** apply.
- ☐ **Denied** — State the reasons for denial below.

Comments: SPE, 2624

UNITED STATES PATENT AND TRADEMARK OFFICE

UNITED STATES DEPARTMENT OF COMMERCE
United States Patent and Trademark Office
Address: COMMISSIONER FOR PATENTS
P.O. Box 1450
Alexandria, Virginia 22313-1450
www.uspto.gov

SHUMAKER & SIEFFERT, P. A.
1625 RADIO DRIVE
SUITE 300
WOODBURY, MN 55125

Mail Date: 04/20/2010

Applicant	: Mark A. Geiger	: DECISION ON REQUEST FOR
Patent Number	: 7614743	: RECALCULATION of PATENT
Issue Date	: 11/10/2009	: TERM ADJUSTMENT IN VIEW
Appliction No	: 10/976,338	: OF WYETH AND NOTICE OF INTENT TO
Filed	: 10/28/2004	: ISSUE CERTIFICATE OF CORRECTION
		:

The Request for Recalculation is **GRANTED** to the extent indicated.

The patent term adjustment has been determined to be **984** days. The USPTO will *sua sponte* issue a certificate of correction reflecting the amount of PTA days determined by the recalculation.

Prior to the issuance of the certificate of correction, the USPTO will afford patentee an opportunity to be heard and request reconsideration. Accordingly, patentee has **one month or thirty (30) days**, whichever is longer, to file a request for reconsideration of this patent term adjustment calculation. See 35 U.S.C. 154(b)(3)(B)(ii) and 37 CFR 1.322(a)(4). No extensions of time will be granted under 37 CFR 1.136.

Patentee should use document code PET.OP if electronically filing a request for reconsideration of this patent term adjustment calculation. The patentee must also include the information required by 37 CFR 1.705(b)(2) and the fee required by 37 CFR 1.18(e). If patentee does not file a timely request for reconsideration of this patent term adjustment calculation including the information required by 37 CFR 1.705(b)(2) and the fee required by 37 CFR 1.18(e), the USPTO will issue a certificate of correction reflecting the PTA determination noted above.

Patentee should be aware that in order to preserve the right to review in the United States District Court for the District of Columbia of the USPTO patent term adjustment determination, patentee must ensure that he or she also take the steps required under 35 U.S.C. 154(b)(4)(A) in a timely manner. Nothing in the request for recalculation should be construed as providing an alternative time frame for commencing a civil action under 35 U.S.C. 154(b)(4)(A).

Any questions concerning this decision should be directed to the Office of Patent Legal Administration at 571-272-7702.

UNITED STATES PATENT AND TRADEMARK OFFICE

Commissioner for Patents
United States Patent and Trademark Office
P.O. Box 1450
Alexandria, VA 22313-1450
www.uspto.gov

DAVID NEWMAN CHARTERED
P.O. BOX 956
INDIAN HEAD, MD 20640

COPY MAILED

JUL 16 2007

OFFICE OF PETITIONS

In re Application of	:	
Paul Baran, et al.	:	
Application No. 10/976,351	:	DECISION ON PETITION
Filed: October 28, 2004	:	TO WITHDRAW
Attorney Docket No. GBTV05US	:	FROM RECORD
	:	

This is a decision on the Request to Withdraw as attorney or agent of record under 37 C.F.R. § 1.36(b) filed January 30, 2007.

The request is **DISMISSED** as moot.

A review of the file record indicates that the power of attorney to David Newman Chartered has been revoked by the assignee of the patent application on May 30, 2007. Accordingly, the request to withdraw under 37 C.F.R. § 1.36(b) is moot.

All future communications from the Office will continue to be directed to the below-listed address until otherwise notified by applicant.

Telephone inquires concerning this decision should be directed to undersigned at 571-272-1642.

April M. Wise
Petitions Examiner
Office of Petitions

cc: DAVID BARAN
GOBACKTV, INC.
937 HAMILTON AVENUE
MENLO PARK, CA 94025

UNITED STATES PATENT AND TRADEMARK OFFICE

UNITED STATES DEPARTMENT OF COMMERCE
United States Patent and Trademark Office
Address: COMMISSIONER FOR PATENTS
P.O. Box 1450
Alexandria, Virginia 22313-1450
www.uspto.gov

APPLICATION NUMBER	FILING OR 371 (c) DATE	FIRST NAMED APPLICANT	ATTY. DOCKET NO./TITLE
10/976,351	10/28/2004	Paul Baran	GBTV05US

CONFIRMATION NO. 5926

OC000000024712157

DAVID NEWMAN CHARTERED
P.O. Box 956
Indian Head, MD 20640

Date Mailed: 07/09/2007

NOTICE REGARDING CHANGE OF POWER OF ATTORNEY

This is in response to the Power of Attorney filed 05/30/2007.

- The Power of Attorney to you in this application has been revoked by the assignee who has intervened as provided by 37 CFR 3.71. Future correspondence will be mailed to the new address of record(37 CFR 1.33).

Office of Initial Patent Examination (571) 272-4000, or 1-800-PTO-9199
FORMER ATTORNEY/AGENT COPY

UNITED STATES PATENT AND TRADEMARK OFFICE

COMMISSIONER FOR PATENTS
UNITED STATES PATENT AND TRADEMARK OFFICE
P.O. BOX 1450
ALEXANDRIA, VA 22313-1450
www.uspto.gov

PILLSBURY WINTHROP SHAW PITTMAN, LLP
P.O. BOX 10500
MCLEAN, VA 22102

COPY MAILED

OCT 0 2 2006

OFFICE OF PETITIONS

In re Application of :
Tsukasa Nakai, et al. :
Application No. 10/976,367 : ON PETITION
Filed: October 29, 2004 :
Attorney Docket No.: 008312-0313030 :

This is a decision on the petition, filed September 27, 2006, under 37 CFR 1.313(c)(2) to withdraw the above-identified application from issue after payment of the issue fee.

The petition is **GRANTED**.

The above-identified application is withdrawn from issue for consideration of a submission under 37 CFR 1.114 (request for continued examination). See 37 CFR 1.313(c)(2).

Petitioner is advised that the issue fee paid on June 28, 2006 in the above-identified application cannot be refunded. If, however, the above-identified application is again allowed, petitioner may request that it be applied towards the issue fee required by the new Notice of Allowance. [1]

Telephone inquiries relating to this decision should be directed to the undersigned at (571) 272-3204.

The application is being referred to Technology Center AU 1774 for further processing of the request for continued examination under 37 CFR 1.114.

Sherry D. Brinkley
Petitions Examiner
Office of Petitions

[1]The request to apply the issue fee to the new Notice may be satisfied by completing and returning the new Issue Fee Transmittal Form PTOL-85(b), which includes the following language thereon: " Commissioner for Patents is requested to apply the Issue Fee and Publication Fee (if any) or re-apply any previously paid issue fee to the application identified above." Petitioner is advised that, whether a fee is indicated as being due or not, the Issue Fee Transmittal Form **must** be completed and timely submitted to avoid abandonment. Note the language in bold text on the first page of the Notice of Allowance and Fee(s) Due (PTOL-85).

UNITED STATES PATENT AND TRADEMARK OFFICE

Commissioner for Patents
United States Patent and Trademark Office
P.O. Box 1450
Alexandria, VA 22313-1450
www.uspto.gov

STETINA BRUNDA GARRED & BRUCKER
75 ENTERPRISE, SUITE 250
ALISO VIEJO, CA 92656

COPY MAILED

JUN 28 2005

OFFICE OF PETITIONS

In re Application of
Cyrus Baldwin, Zachary Saielli and Mark Creighton
Application No. 10/976,373
Filed: October 29, 2004
For: HEAT PUMPED SURVEILLANCE CAMERA HOUSING AND METHOD OF MANUFACTURING THE SAME

DECISION REFUSING STATUS UNDER 37 CFR 1.47(a)

This is in response to the petition under 37 CFR 1.47(b), filed June 13, 2005 (Certificate of Mailing date: June 10, 2005), which has been treated as a petition under 37 CFR 1.47(a).[1]

The petition is dismissed.

Rule 47 applicant is given TWO MONTHS from the mailing date of this decision to reply, correcting the below-noted deficiencies. Any reply should be entitled "Request for Reconsideration of Petition Under 37 CFR 1.47(a)," and should only address the deficiencies noted below, except that the reply may include an oath or declaration executed by the non-signing inventor. **FAILURE TO RESPOND WILL RESULT IN ABANDONMENT OF THE APPLICATION.** Any extensions of time will be governed by 37 CFR 1.136(a).

The above-identified application was filed on October 29, 2004 without an executed oath or declaration and naming Cyrus Baldwin, Zachary Saielli and Mark Creighton as joint inventors.

Accordingly, on December 10, 2004, a "Notice to File Missing Parts of Application" was mailed, requiring an executed oath or declaration, and a surcharge for its late filing.

In response, on June 13, 2005 (Certificate of Mailing date: June 10, 2005), the instant petition and a four (4) month extension of time were filed.

A grantable petition under 37 CFR 1.47(a) requires:

> (1) proof that the non-signing inventor cannot be reached or refuses to sign the oath or declaration after having been presented with the application papers (specification, claims and drawings);

[1] A petition under 37 CFR 1.47(b) is inappropriate in this instance since all but one of the inventors has signed the declaration. A petition under 37 CFR 1.47(b) is only appropriate where none of the inventors will sign, accordingly the petition will be treated as a petition under 37 CFR 1.47(a).

(2) an acceptable oath or declaration in compliance with 35 U.S.C. 115 and 116;

(3) the petition fee; and

(4) a statement of the last known address of the non-signing inventor.

Applicant lacks item (1), as set forth above.

As to item (1), applicant appears to demonstrate that the non-signing inventor was only presented with the declaration and assignment. Unless the non-signing inventor was presented with a copy of the application papers (specification, claims and drawings), the non-signing inventor could not attest that he has "reviewed and understands the application papers" and therefore could not sign the declaration which he was given. Accordingly, applicant failed to show or provide proof that the inventor has refused to sign the declaration. See MPEP 409.03(d). Petitioner should show that a copy of the application papers was presented to the non-signing inventor, but that he did not respond to, or refused, the request that he sign the oath/declaration in order to show that the inventor has refused to join in the application. The proof of the pertinent events should be made by a statement of someone with first hand knowledge of the events.

Further correspondence with respect to this matter should be addressed as follows:

By mail: Mail Stop Petition
Commissioner for Patents
Box 1450
Alexandria, VA 22313

By FAX: (703) 872-9306
Attn: Office of Petitions

By hand: Customer Service Window
Randolph Building
401 Dulany Street
Alexandria, VA 22314

Telephone inquiries related to this decision should be directed to the undersigned at (571) 272-3228.

Edward J. Tannouse
Petitions Attorney
Office of Petitions/Patent
United States Patent and Trademark Office

UNITED STATES PATENT AND TRADEMARK OFFICE

Commissioner for Patents
United States Patent and Trademark Office
P.O. Box 1450
Alexandria, VA 22313-1450
www.uspto.gov

STETINA BRUNDA GARRED & BRUCKER
75 ENTERPRISE, SUITE 250
ALISO VIEJO, CA 92656

COPY MAILED

SEP 21 2005

OFFICE OF PETITIONS

In re Application of Cyrus Baldwin, Zachary Saielli and Mark Creighton Application No. 10/976,373 Filed: October 29, 2004 For: HEAT PUMPED SURVEILLANCE CAMERA HOUSING AND METHOD OF MANUFACTURING THE SAME	: : : : : : : :	DECISION REFUSING STATUS UNDER 37 CFR 1.47(a)

This is in response to the "Response To Petition Decision Refusing Status Under 37 CFR 1.47(a)," filed August 29, 2005.

The petition is dismissed.

Rule 47 applicant is given TWO MONTHS from the mailing date of this decision to reply, correcting the below-noted deficiencies. Any reply should be entitled "Request for Reconsideration of Petition Under 37 CFR 1.47(a)," and should only address the deficiencies noted below, except that the reply may include an oath or declaration executed by the non-signing inventor. **FAILURE TO RESPOND WILL RESULT IN ABANDONMENT OF THE APPLICATION.** Any extensions of time will be governed by 37 CFR 1.136(a).

The above-identified application was filed on October 29, 2004 without an executed oath or declaration and naming Cyrus Baldwin, Zachary Saielli and Mark Creighton as joint inventors.

Accordingly, on December 10, 2004, a "Notice to File Missing Parts of Application" was mailed, requiring an executed oath or declaration, and a surcharge for its late filing.

In response, on June 13, 2005 (Certificate of Mailing date: June 10, 2005), the original petition and a four (4) month extension of time were filed. On August 29, 2005, one (1) page of declaration was submitted.

A grantable petition under 37 CFR 1.47(a) requires:

(1) proof that the non-signing inventor cannot be reached or refuses to sign the oath or declaration after having been presented with the application papers (specification, claims and drawings);

(2) an acceptable oath or declaration;

(3) the petition fee; and

(4) a statement of the last known address of the non-signing inventor.

Applicant lacks item (2), as set forth above.

An oath or declaration for the patent application in compliance with 37 CFR 1.63 and 1.64 still has not been presented. The declaration submitted August 29, 2005, does not satisfy the requirements of 37 CFR 1.63 and 1.64. Furthermore, only one inventor is named with the other previously named inventors missing. If petitioner wishes to remove the other originally named inventors, a petition under 37 CFR 1.48 must be submitted in order to delete those inventors. If this is not the case, petitioner should submit a **complete** declaration in compliance with 37 CFR 1.63 and 1.64.

Further correspondence with respect to this matter should be addressed as follows:

By mail: Mail Stop Petition
Commissioner for Patents
Box 1450
Alexandria, VA 22313

By FAX: (571) 273-8300
Attn: Office of Petitions

By hand: Customer Service Window
Randolph Building
401 Dulany Street
Alexandria, VA 22314

Telephone inquiries related to this decision should be directed to the undersigned at (571) 272-3228.

Edward J. Tannouse
Petitions Attorney
Office of Petitions
Office of the Deputy Commissioner
for Patent Examination Policy

UNITED STATES PATENT AND TRADEMARK OFFICE

Commissioner for Patents
United States Patent and Trademark Office
P.O. Box 1450
Alexandria, VA 22313-1450
www.uspto.gov

STETINA BRUNDA GARRED & BRUCKER
75 ENTERPRISE, SUITE 250
ALISO VIEJO, CA 92656

COPY MAILED

OCT 13 2005

OFFICE OF PETITIONS

In re Application of	:	
Cyrus Baldwin, Zachary Saielli and	:	
Mark Creighton	:	DECISION NOTING JOINDER OF
Application No. 10/976,373	:	INVENTOR AND PETITION
Filed: October 29, 2004	:	UNDER 37 CFR 1.47(a) MOOT
For: HEAT PUMPED SURVEILLANCE	:	
CAMERA HOUSING AND METHOD OF	:	
MANUFACTURING THE SAME	:	

This is in response to the "Request For Reconsideration of Petition Under 37 CFR 1.47(a)," filed October 3, 2005.

Petitioner has submitted a Declaration executed by the previously non-signing inventor Mark Creighton in compliance with 37 CFR 1.63. Therefore, in view of the joinder of the inventors, further consideration under 37 CFR 1.47(a) is not necessary and the petition is considered moot. This application does not require Rule 1.47(a) status, and no such status should appear on the file wrapper. This application need not be returned to this Office for further consideration under 37 CFR 1.47(a).

The file is being forwarded to technology Center 2800 for examination *in due course*.

Telephone inquiries regarding this decision should be directed to the undersigned at (571) 272-3228.

Edward J. Tannouse
Petitions Attorney
Office of Petitions
Office of the Deputy Commissioner
for Patent Examination Policy

UNITED STATES PATENT AND TRADEMARK OFFICE

Commissioner for Patents
United States Patent and Trademark Office
P.O. Box 1450
Alexandria, VA 22313-1450
www.uspto.gov

FINNEGAN, HENDERSON, FARABOW,
GARRETT & DUNNER LLP
901 NEW YORK AVENUE, NW
WASHINGTON DC 20001-4413

COPY MAILED

AUG 26 2009

OFFICE OF PETITIONS

In re Patent No. 7,384,543	: DECISION ON
Issued: June 10, 2008	: PETITION UNDER 37 CFR 1.183
Application No. 10/976,416	: and on
Filed: October 29, 2004	: APPLICATION
Attorney Docket No.: 07552.0046	: FOR PATENT TERM ADJUSTMENT

This is a decision on the "PETITION UNDER 37 C.F.R. § 1.183 FOR WAIVER OF THE REQUIREMENT UNDER 37 C.F.R. § 1.705(d)", requesting that the Office suspend the rules and consider on the merits a Request for Reconsideration of Patent Term Adjustment under 37 C.F.R. 1.705(d) filed more than two months from the date the above-referenced patent issued; and on the "DETERMINATION OF PATENT TERM ADJUSTMENT - POST GRANT", all of which were filed on December 4, 2008.

The petition under 37 CFR 1.183 is **dismissed**.

The request for reconsideration of patent term adjustment under 37 CFR 1.705(d) is **dismissed as untimely filed**.

Any request for reconsideration, whether directed to the decision on petition under 37 CFR 1.183 or to the decision on application for patent term adjustment under 37 CFR 1.705(d), must be filed within two months of the mailing date of this decision. Extensions of time under 37 CFR 1.136 are not permitted. See § 1.181(f).

BACKGROUND

On June 10, 2008, the above-identified application matured into U.S. Patent No. 7,384,543, with a revised patent term adjustment of 538 days. No request for reconsideration of the patent term adjustment indicated in the patent was filed within two months of the date the patent issued. Patentee now petitions under 37 C.F.R. § 1.183 to (i) suspend or waive the requirement of 37 C.F.R. § 1.705(d) that any request for reconsideration of the patent term adjustment indicated in an issued patent must be filed within two months of the date the patent issues; and (ii) consider the enclosed

"DETERMINATION OF PATENT TERM ADJUSTMENT - POST GRANT". Patentee requests a change in the PTA based on determination in a manner consistent with the court's decision referred to in *Wyeth v. Dudas*, No. 07-1492 (D.D.C. Sept. 30, 2008)."

ON PETITION UNDER 37 CFR 1.183
TO WAIVE THE TWO-MONTH REQUIREMENT OF 37 CFR 1.705(d)

The above-referenced patent issued on June 10, 2008. A request for reconsideration of the patent term adjustment indicated in the patent was not filed until December 4, 2008. Petitioner requests that the Office suspend the rules and consider on the merits the Request for Reconsideration of Patent Term Adjustment under 37 C.F.R. 1.705(d) even though it was untimely filed more than two months from the date the patent issued.

The relevant regulation, 37 CFR 1.705(d), provides that:

> If there is a revision to the patent term adjustment indicated in the notice of allowance, the patent will indicate the revised patent term adjustment. If the patent indicates or should have indicated a revised patent term adjustment, *any request for reconsideration of the patent term adjustment indicated in the patent must be filed within two months of the date the patent issued* and must comply with the requirements of paragraphs (b)(1) and (b)(2) of this section. Any request for reconsideration under this section that raises issues that were raised, or could have been raised, in an application for patent term adjustment under paragraph (b) of this section shall be dismissed as untimely as to those issues. (*emphasis* added).

By the express provisions of 37 CFR 1.705(d), a request for reconsideration of patent term adjustment must be filed within two months of the date the patent issued. It is undisputed that no such request for reconsideration was filed by August 10, 2008, the date two months from the date this patent issued, June 10, 2008. Rather, on December 4, 2008, nearly three months after the issuance of a decision in Wyeth v. Dudas on September 30, 2008, petitioner filed the instant request for waiver of the two-month requirement.

37 CFR 1.183 provides that:

> In an extraordinary situation, when justice requires, any requirement of the regulations in this part which is not a requirement of the statutes may be suspended or waived by the Director or the Director's designee, sua sponte, or on petition of the interested party, subject to such other requirements as may be

imposed. Any petition under this section must be accompanied by the petition fee set forth in § 1.17(f).

Preliminarily, it is recognized that the two-month requirement of 37 CFR 1.705(d) is a requirement of the regulations and not a statutory requirement. The statute, 35 U.S.C. 154, requires the Office to provide the applicant one opportunity to request reconsideration of any patent term adjustment determination made by the Director. But, the statute allows the Director to establish the procedures for requesting such reconsideration. Those procedures[1] include pursuant to 37 CFR 1.705(d) setting a two-month period for filing a request for reconsideration of the revised patent term adjustment indicated in the patent. As such, it is within the Director's authority to waive the two-month requirement.

Having considered petitioner's arguments, it is concluded that waiver of the two-month requirement is not warranted. The primary basis for requesting waiver set forth by petitioner is "the extraordinary situation presented by the recent decision in Wyeth v. Dudas, No. 07-1492 (D.D.C. Sept. 30, 2008)."

Specifically, petitioner states that the basis for this petition is due to a case decided by the United States District Court for the District of Columbia on September 30, 2008, whereby that date is more than two months with respect to the patent issuance date of the above-identified patent.

In Wyeth, the U.S. District Court for the District of Columbia held that contrary to USPTO practice, a patentee is entitled to Patent Term Adjustment credit for examination delay under 37 CFR 1.702(b) in addition to any examination delay under

---

[1] 35 U.S.C. § 154(b)(3) provides that the USPTO shall: (1) prescribe regulations establishing procedures for the application for and determination of patent term adjustments under 35 U.S.C. § 154(b); (2) make a determination of any patent term adjustment under 35 U.S.C. § 154(b) and transmit a notice of that determination with the notice of allowance under 35 U.S.C. § 151; and (3) provide the applicant one opportunity to request reconsideration of any patent term adjustment determination. Pursuant to the mandate and authority in 35 U.S.C. § 154(b)(3), the USPTO promulgated 37 C.F.R. § 1.705, which provides that: (1) the notice of allowance will include notification of any patent term adjustment under 35 U.S.C. § 154(b)(37 C.F.R. § 1.705(a)); (2) any request for reconsideration of the patent term adjustment indicated in the notice of allowance (except as provided in 37 C.F.R. § 1.705(d)) must be by way of an application for patent term adjustment filed no later than the payment of the issue fee and accompanied by (inter alia) the fee set forth in 37 C.F.R. § 1.18(e)(37 C.F.R. § 1.705(b)); and (3) if the patent indicates or should have indicated a revised patent term adjustment, any request for reconsideration of the patent term adjustment indicated in the patent must be filed within two months of the date the patent issued.

37 CFR 1.702(a), to the extent that the two periods of delay "do not occur on the same calendar day or days."

Petitioner argues that they could not have filed a Request for Reconsideration of Patent Term Adjustment within two months of the date the above-referenced patent issued because the basis for the Request for Reconsideration of Patent Term Adjustment is the Wyeth decision, which was entered more than two months after the issuance of their patent.

First, of all, the issuance of the Wyeth Opinion is not an extraordinary situation. Wyeth followed the procedure set forth in 37 CFR 1.705 for requesting reconsideration of the patent term adjustment determination. Then, pursuant to 35 U.S.C. 154(b)(4)(A)[2], Wyeth timely filed a complaint in District Court seeking judicial review of the Office's decision. A Memorandum Opinion and Order, the Wyeth decision of September 30, 2008, directed to the parties involved was issued.

The fact that any relief ultimately granted in Wyeth would benefit patentee had they timely filed a request for reconsideration does not make the situation extraordinary. Petitioner chose not to challenge their revised patent term adjustment within the two-month period. Petitioner's argument that they could not have filed a Request for Reconsideration of Patent Term Adjustment within two months of the date the above-referenced patent issued because the basis for the Request for Reconsideration of Patent Term Adjustment is the Wyeth decision, which was entered more than two months after the issuance of their patent, is not compelling. Petitioner could have filed a Request for Reconsideration of Patent Term Adjustment as Wyeth did. It is acknowledged that petitioner may have chose not to file a request for reconsideration based on a conclusion that the Office's interpretation of 35 U.S.C. § 154(b)(2)(A) was correct. Nonetheless, the fact that the District Court has now issued an Opinion contrary to the Office's interpretation does not make the situation extraordinary. This is not unlike any other situation where a patentee (or applicant) challenges a final agency decision and the decision upon judicial review could have had applicability to another patentee (or applicant) had they taken such action. In fact, many patentees may be in the same situation as petitioner with respect to the Wyeth decision.

Petitioner simply fails to articulate how their failure to file a request for reconsideration of patent term adjustment within two months of the issue date of the patent was due to

---

[2] 35 U.S.C. 154(b)(4) (A) APPEAL OF PATENT TERM ADJUSTMENT DETERMINATION. — (A) An applicant dissatisfied with a determination made by the Director under paragraph (3) shall have remedy by a civil action against the Director filed in the United States District Court for the District of Columbia within 180 days after the grant of the patent. Chapter 7 of title 5 shall apply to such action. Any final judgment resulting in a change to the period of adjustment of the patent term shall be served on the Director, and the Director shall thereafter alter the term of the patent to reflect such change.

an extraordinary situation. Petitioner cannot rely on Wyeth's actions or the Wyeth decision to establish that their situation was extraordinary.

Moreover, justice does not require waiver of the two-month requirement. Justice requires that the Office continue to devote its resources to the adjudication of timely filed requests for reconsideration under 37 CFR 1.705(b) and (d). Further, upon ultimate resolution of the interpretation of 37 CFR 1.702, justice requires that the Office determine consistent with relevant law and practice, and appropriate Court or legislative guidance, the applicability of any changes as to all affected patentees who failed to timely seek administrative remedy, and thus, could not seek judicial review.

In view thereof, the petition under 37 CFR 1.183 for waiver of the two-month requirement of 37 CFR 1.705(d) is **DISMISSED**.

Accordingly, consideration now turns to the "DETERMINATION OF PATENT TERM ADJUSTMENT - POST GRANT".

ON "DETERMINATION OF PATENT TERM ADJUSTMENT - POST GRANT"

This is a decision on the "DETERMINATION OF PATENT TERM ADJUSTMENT - POST GRANT", filed December 4, 2008. Therein, patentee requests correction of the patent term adjustment (PTA) indicated in the patent to seven hundred sixty-three (763) days.

On June 10, 2008, the above-identified application matured into U.S. Patent No. 7,384,543 with a revised patent term adjustment of 538 days. The instant request for reconsideration was filed more than two months after the issuance of the patent, on December 4, 2008.

No error in the printing of the patent has been shown. The patent term adjustment indicated on the patent reflects the Office's determination of patent term adjustment shown in the PAIR system for this application. 37 CFR 1.705(d) provides the sole avenue before the Office for requesting reconsideration of the Office's determination of patent term adjustment indicated in the patent. Moreover, § 1.705(d) states that "any request for reconsideration of the patent term adjustment indicated in the patent must be filed within two months of the date the patent issued and must comply with the requirements of paragraphs (b)(1) and (b)(2) of this section." Since the request was not filed within two months of the issue date of the patent, the request is properly **dismissed as untimely filed**.

CONCLUSION

It is determined that waiver of the requirement pursuant to 37 CFR 1.183 is not warranted. Accordingly, the request for reconsideration of the patent term adjustment under 37 CFR 1.705(d) filed more than two months after the issue date of the patent is dismissed as untimely filed.

The Office acknowledges submission of the $400.00 fee for a petition under 37 CFR 1.183 to suspend the rules. Per the authorization contained in the petition under 37 CFR 1.183, the fee set forth in 37 CFR 1.18(e), in the amount of $200.00, has been charged to deposit account no. 06-0916 for the "DETERMINATION OF PATENT TERM ADJUSTMENT - POST GRANT", filed December 4, 2008.

Telephone inquiries specific to this decision should be directed to Senior Petitions Attorney Patricia Faison-Ball at (571) 272-3212.

Christina Tartera Donnell for

Kery A. Fries
Senior Legal Advisor
Office of Patent Legal Administration
Office of Deputy Commissioner
for Examination Policy

UNITED STATES PATENT AND TRADEMARK OFFICE

Commissioner for Patents
United States Patent and Trademark Office
P.O. Box 1450
Alexandria, VA 22313-1450
www.uspto.gov

Date : July 7, 2009

Patent No. :7516769
Inventor(s) :Fu-Lai Yu et al.
Issued :April 14, 2009
Title :LASER TREATMENT OF SANITARY PRODUCTS

Re: Request for Certificate of Correction

Consideration has been given your request for the issuance of a certificate of correction for the above identified patent.

Applicants' proposed request to change data in Col. 9, line 17 and 19; and col. 10, line 45 is not warranted entry. The changes as presented in the Letters Patent is the result of a decision made by the examiner as proposed in Notice of Allowability dated January 14, 2009. Accordingly, the change is regarded as being in accordance with the records of the Patent and Trademark Office.

In view of the forgoing applicants' request in this matter is hereby denied. Any inquiry concerning this communication should be directed to Ms. A. Green at (703) 756-1541

Mary Diggs, Supervisor
Decisions & Certificates
of Correction Branch
(703) 756-1580 or (703) 756-1541

OLSON & CEPURITIS, LTD
20 N. Wacker Drive, 36th Flr.
Chicago, Ill 60606

/arg

UNITED STATES PATENT AND TRADEMARK OFFICE

Commissioner for Patents
United States Patent and Trademark Office
P.O. Box 1450
Alexandria, VA 22313-1450
www.uspto.gov

BAKER & DANIELS LLP
300 NORTH MERIDIAN STREET
SUITE 2700
INDIANAPOLIS IN 46204

COPY MAILED

AUG 28 2007

OFFICE OF PETITIONS

In re Patent No. 7,107,926	:	
Issue Date: September 19, 2006	:	
Application No. 10/976,437	:	NOTICE
Filed: October 29, 2004	:	
Attorney Docket No. BMI0005	:	

This is a notice regarding your request for acceptance of a fee deficiency submission under 37 CFR 1.28. On September 1, 1998, the Court of Appeals for the Federal Circuit held that 37 CFR 1.28(c) is the sole provision governing the time for correction of the erroneous payment of the issue fee as a small entity. **See DH Technology v. Synergystex International, Inc. 154 F.3d 1333, 47 USPQ2d 1865 (Fed. Cir. Sept. 1, 1998).**

The Office no longer investigates or rejects original or reissue applications under 37 CFR 1.56. **1098 Off. Gaz. Pat. Office 502 (January 3, 1989).** Therefore, nothing in this Notice is intended to imply that an investigation was done.

Your fee deficiency submission under 37 CFR 1.28 is hereby **ACCEPTED**.

This patent is no longer entitled to small entity status. Accordingly, all future fees paid in this patent must be paid at the large entity rate.

Liana Walsh
Petitions Examiner
Office of Petitions

UNITED STATES PATENT AND TRADEMARK OFFICE

UNITED STATES DEPARTMENT OF COMMERCE
United States Patent and Trademark Office
Address: COMMISSIONER FOR PATENTS
P.O. Box 1450
Alexandria, Virginia 22313-1450
www.uspto.gov

ALLERGAN, INC.
2525 DUPONT DRIVE, T2-7H
IRVINE, CA 92612-1599

Mail Date: 04/21/2010

Applicant	: Larry A. Wheeler	: DECISION ON REQUEST FOR
Patent Number	: 7612082	: RECALCULATION of PATENT
Issue Date	: 11/03/2009	: TERM ADJUSTMENT IN VIEW
Appliction No	: 10/976,442	: OF WYETH AND NOTICE OF INTENT TO
Filed	: 10/28/2004	: ISSUE CERTIFICATE OF CORRECTION
		:

The Request for Recalculation is **GRANTED** to the extent indicated.

The patent term adjustment has been determined to be **1180** days. The USPTO will *sua sponte* issue a certificate of correction reflecting the amount of PTA days determined by the recalculation.

Prior to the issuance of the certificate of correction, the USPTO will afford patentee an opportunity to be heard and request reconsideration. Accordingly, patentee has **one month or thirty (30) days**, whichever is longer, to file a request for reconsideration of this patent term adjustment calculation. See 35 U.S.C. 154(b)(3)(B)(ii) and 37 CFR 1.322(a)(4). No extensions of time will be granted under 37 CFR 1.136.

Patentee should use document code PET.OP if electronically filing a request for reconsideration of this patent term adjustment calculation. The patentee must also include the information required by 37 CFR 1.705(b)(2) and the fee required by 37 CFR 1.18(e). If patentee does not file a timely request for reconsideration of this patent term adjustment calculation including the information required by 37 CFR 1.705(b)(2) and the fee required by 37 CFR 1.18(e), the USPTO will issue a certificate of correction reflecting the PTA determination noted above.

Patentee should be aware that in order to preserve the right to review in the United States District Court for the District of Columbia of the USPTO patent term adjustment determination, patentee must ensure that he or she also take the steps required under 35 U.S.C. 154(b)(4)(A) in a timely manner. Nothing in the request for recalculation should be construed as providing an alternative time frame for commencing a civil action under 35 U.S.C. 154(b)(4)(A).

Any questions concerning this decision should be directed to the Office of Patent Legal Administration at 571-272-7702.

UNITED STATES PATENT AND TRADEMARK OFFICE

Commissioner for Patents
United States Patent and Trademark Office
P.O. Box 1450
Alexandria, VA 22313-1450
www.uspto.gov

COPY MAILED

DEC 0 6 2006

OFFICE OF PETITIONS

STOEL RIVES LLP
201 SOUTH MAIN STREET, SUITE 1100
SALT LAKE CITY, UT 84111

In re Application of
HAUPT
Application No. 10/976, 444
Filed: October 29, 2004
Attorney Docket No. 50624/4.3

DECISION ON PETITION TO WITHDRAW FROM RECORD

This is a decision on the Request to Withdraw as attorney or agent of record under 37 C.F.R. § 1.36(b), filed September 14, 2006.

The request is **APPROVED**.

A grantable request to withdraw as attorney/agent of record must be signed by every attorney/agent seeking to withdraw or contain a clear indication that one attorney is signing on behalf of another/others. A request to withdraw will not be approved unless at least 30 (thirty) days would remain between the date of approval and the later of the expiration date of a time to file a response or the expiration date of the maximum time period which can be extended under 37 C.F.R. § 1.136(a).

The request was signed by John R. Thompson on behalf of all attorneys of record. All attorneys/agents associated have been withdrawn. Applicant is reminded that there is no attorney of record at this time.

The request to change the correspondence of record is not acceptable as the requested correspondence address is not that of: (1) the first named signing inventor; or (2) an intervening assignee of the entire interest under 37 C.F.R 3.71. All future communications from the Office will be directed to the first named signing inventor at the first copied address below until otherwise properly notified by the applicant.

There is an outstanding Office action mailed May 31, 2006 that requires a reply from the applicant.

Telephone inquiries concerning this decision should be directed to the undersigned at 571-272-7253.

Monica A. Graves
Petitions Examiner
Office of Petitions

cc: **ROBERT HAUPT**
789 SOUTH 900 EAST
SPRINGVILLE, UT 84663

cc: **SPARK NETWORKS, PLC**
8383 WILSHIRE BLVD, SUITE 800
BEVERLY HILLS, CA 90211

UNITED STATES PATENT AND TRADEMARK OFFICE

UNITED STATES DEPARTMENT OF COMMERCE
United States Patent and Trademark Office
Address: COMMISSIONER FOR PATENTS
P.O. Box 1450
Alexandria, Virginia 22313-1450
www.uspto.gov

APPLICATION NUMBER	FILING OR 371 (c) DATE	FIRST NAMED APPLICANT	ATTY. DOCKET NO./TITLE
10/976,444	10/29/2004	Robert K. Haupt	50624/4.3

CONFIRMATION NO. 7191

OC000000021493866

John R. Thompson
STOEL RIVES LLP
Suite 1100
201 South Main Street
Salt Lake City, UT 84111

Date Mailed: 12/06/2006

NOTICE REGARDING CHANGE OF POWER OF ATTORNEY

This is in response to the Power of Attorney filed 09/14/2006.

- The withdrawal as attorney in this application has been accepted. Future correspondence will be mailed to the new address of record. 37 CFR 1.33.

MONICA A GRAVES
OP (571) 272-7253

FORMER ATTORNEY/AGENT COPY

UNITED STATES PATENT AND TRADEMARK OFFICE

COMMISSIONER FOR PATENTS
UNITED STATES PATENT AND TRADEMARK OFFICE
P.O. BOX 1450
ALEXANDRIA, VA 22313-1450
www.uspto.gov

MAILED

APR 07 2010

OFFICE OF PETITIONS

COOK ALEX LTD
SUITE 2850
200 WEST ADAMS STREET
CHICAGO IL 60606

In re Patent No. 7,605,786	: DECISION ON REQUEST FOR
Yamazaki et al.	: RECONSIDERATION OF
Issue Date: October 20, 2009	: PATENT TERM ADJUSTMENT
Application No. 10/976,457	: AND
Filed: October 29, 2004	: NOTICE OF INTENT TO ISSUE
Attorney Docket No. 0553-0169.04	: CERTIFICATE OF CORRECTION

This is a decision on the petition filed on December 10, 2009, which is being treated as a petition under 37 CFR 1.705(d) requesting that the patent term adjustment indicated on the above-identified patent be corrected to indicate that the term of the above-identified patent is extended or adjusted by six hundred thirty-seven (637) days.

The petition to correct the patent term adjustment indicated on the above-identified patent to indicate that the term of the above-identified patent is extended or adjusted by six hundred thirty-seven (637) days is **GRANTED**.

The Office will charge the $200.00 fee set forth in 37 CFR 1.18(e) to the Deposit Account as authorized. No additional fees are required.

The application is being forwarded to the Certificates of Correction Branch for issuance of a certificate of correction. The Office will issue a certificate of correction indicating that the term of the above-identified patent is extended or adjusted by **six hundred thirty-seven (637) days**.

Telephone inquiries specific to this matter should be directed to the undersigned at (571) 272-3211.

C. T. Donnell

Christina Tartera Donnell
Senior Petitions Attorney
Office of Petitions

Enclosure: Copy of DRAFT Certificate of Correction

UNITED STATES PATENT AND TRADEMARK OFFICE

CERTIFICATE OF CORRECTION

PATENT : 7,605,786 B2

DATED : Oct. 20, 2009 **DRAFT**

INVENTOR(S) : Yamazaki et al.

It is certified that error appears in the above-identified patent and that said Letters Patent is hereby corrected as shown below:

On the cover page,

[*] Notice: Subject to any disclaimer, the term of this patent is extended or adjusted under 35 USC 154(b) by 384 days

Delete the phrase "by 384 days" and insert – by 637 days--

UNITED STATES PATENT AND TRADEMARK OFFICE

UNITED STATES DEPARTMENT OF COMMERCE
United States Patent and Trademark Office
Address: COMMISSIONER FOR PATENTS
P.O. Box 1450
Alexandria, Virginia 22313-1450
www.uspto.gov

BACHMAN & LAPOINTE, P.C.
900 CHAPEL STREET
SUITE 1201
NEW HAVEN, CT 06510

Mail Date: 05/11/2010

Applicant	: Steven J. Fredette	: DECISION ON REQUEST FOR
Patent Number	: 7617062	: RECALCULATION of PATENT
Issue Date	: 11/10/2009	: TERM ADJUSTMENT IN VIEW
Application No	: 10/976,486	: OF WYETH AND NOTICE OF INTENT TO
Filed	: 10/29/2004	: ISSUE CERTIFICATE OF CORRECTION
		:

The Request for Recalculation is **GRANTED** to the extent indicated.

The patent term adjustment has been determined to be **1067** days. The USPTO will *sua sponte* issue a certificate of correction reflecting the amount of PTA days determined by the recalculation.

Prior to the issuance of the certificate of correction, the USPTO will afford patentee an opportunity to be heard and request reconsideration. Accordingly, patentee has **one month or thirty (30) days**, whichever is longer, to file a request for reconsideration of this patent term adjustment calculation. See 35 U.S.C. 154(b)(3)(B)(ii) and 37 CFR 1.322(a)(4). No extensions of time will be granted under 37 CFR 1.136.

Patentee should use document code PET.OP if electronically filing a request for reconsideration of this patent term adjustment calculation. The patentee must also include the information required by 37 CFR 1.705(b)(2) and the fee required by 37 CFR 1.18(e). If patentee does not file a timely request for reconsideration of this patent term adjustment calculation including the information required by 37 CFR 1.705(b)(2) and the fee required by 37 CFR 1.18(e), the USPTO will issue a certificate of correction reflecting the PTA determination noted above.

Patentee should be aware that in order to preserve the right to review in the United States District Court for the District of Columbia of the USPTO patent term adjustment determination, patentee must ensure that he or she also take the steps required under 35 U.S.C. 154(b)(4)(A) in a timely manner. Nothing in the request for recalculation should be construed as providing an alternative time frame for commencing a civil action under 35 U.S.C. 154(b)(4)(A).

Any questions concerning this decision should be directed to the Office of Patent Legal Administration at 571-272-7702.

UNITED STATES PATENT AND TRADEMARK OFFICE

Commissioner for Patents
United States Patent and Trademark Office
P.O. Box 1450
Alexandria, VA 22313-1450
www.uspto.gov

MARGER JOHNSON & MCCOLLOM, P.C. - SHARP
210 SW MORRISON STREET, SUITE 400
PORTLAND, OR 97204

COPY MAILED

APR 17 2008

OFFICE OF PETITIONS

In re Application of
FAIRHURST, Jon A. et al.
Application No. 10/976,498
Filed: October 29, 2004
Attorney Docket No. **8371-0178**

DECISION ON PETITION
TO WITHDRAW
FROM RECORD

This is a decision on the Request to Withdraw as attorney or agent of record under 37 C.F.R. § 1.36(b), filed February 21, 2008.

The request is **NOT APPROVED** as moot.

A review of the file record indicates that the power of attorney to MARGER JOHNSON & MCCOLLOM, P.C. has been revoked by the assignee of the patent application on February 15, 2008. Accordingly, the request to withdraw under 37 C.F.R. § 1.36(b) is moot.

All future communications from the Office will continue to be directed to the below-listed address until otherwise notified by applicant.

Telephone inquires concerning this decision should be directed to Tredelle Jackson at 571-272-2783.

Tredelle D. Jackson
Petitions Examiner
Office of Petitions

cc: **STOLOWITZ FORD COWGER LLP**
621 SW MORRISON ST
SUITE 600
PORTLAND OR 97205

UNITED STATES PATENT AND TRADEMARK OFFICE

Commissioner for Patents
United States Patent and Trademark Office
P.O. Box 1450
Alexandria, VA 22313-1450
www.uspto.gov

COPY MAILED

JUN 23 2008

OFFICE OF PETITIONS

STOLOWITZ FORD COWGER LLP/SHARP
621 SW MORRISON ST
SUITE 600
PORTLAND OR 97205

In re Application of

FAIRHURST, Jon A. et al.
Application No. 10/976,498
Filed: October 29, 2004
Attorney Docket No. **8371-0178**

DECISION ON PETITION
TO WITHDRAW
FROM RECORD

This is a decision on the Request to Withdraw as attorney or agent of record under 37 C.F.R. § 1.36(b), filed May 12, 2008.

The request is **NOT APPROVED**.

A grantable request to withdraw as attorney/agent of record must be signed by every attorney/agent seeking to withdraw or contain a clear indication that one attorney is signing on behalf of another/others. A request to withdraw will not be approved unless at least 30 (thirty) days would remain between the date of approval and the later of the expiration date of a time to file a response or the expiration date of the maximum time period which can be extended under 37 C.F.R. § 1.136(a).

The request cannot be approved because no reasons for withdrawal have been provided. The Office cannot, at this time, determine whether practitioner's request is one of the mandatory or permissive reasons enumerated in 37 CFR 10.40. Any subsequent requests must include reasons for withdrawal. Please note that there is a space provided for on PTO/SB/83 (Request to Withdraw as Attorney or Agent) to supply practitioner's reasons.

All future communications from the Office will continue to be directed to the above-listed address until otherwise notified by applicant.

Telephone inquiries concerning this decision should be directed to Tredelle Jackson at 571-272- 2783.

Tredelle D. Jackson
Petitions Examiner
Office of Petitions

cc: **MARGER JOHNSON & MCCOLLOM, P.C. - SHARP**
210 SW MORRISON STREET, SUITE 400
PORTLAND, OR 97204

UNITED STATES PATENT AND TRADEMARK OFFICE

Commissioner for Patents
United States Patent and Trademark Office
P.O. Box 1450
Alexandria, VA 22313-1450
www.uspto.gov

JOHN S. BEULICK (12729)
C/O ARMSTRONG TEASDALE LLP
ONE METROPOLITAN SQUARE, SUITE 2600
ST. LOUIS, MO 63102-2740

COPY MAILED
AUG 22 2008

In re Application of :
Thomas O. Moniz et al :
Application No. 10/976,523 : ON PETITION
Filed: October 29, 2004 :
Attorney Docket No. 126857

This is a decision on the petition, filed August 21, 2008 under 37 CFR 1.313(c)(2) to withdraw the above-identified application from issue after payment of the issue fee.

The petition is **GRANTED**.

The above-identified application is withdrawn from issue for consideration of a submission under 37 CFR 1.114 (request for continued examination). See 37 CFR 1.313(c)(2).

Petitioner is advised that the issue fee paid on August 5, 2008 in the above-identified application cannot be refunded. If, however, the above-identified application is again allowed, petitioner may request that it be applied towards the issue fee required by the new Notice of Allowance.[1]

Telephone inquiries should be directed to Irvin Dingle at (571) 272-3210.

This matter is being referred to Technology Center AU 3746 for processing of the request for continued examination under 37 CFR 1.114 and for consideration of the concurrently filed Information Disclosure Statement.

Irvin Dingle
Petitions Examiner
Office of Petitions

[1] The request to apply the issue fee to the new Notice may be satisfied by completing and returning the new Issue Fee Transmittal Form PTOL-85(b), which includes the following language thereon: Commissioner for Patents is requested to apply the Issue Fee and Publication Fee (if any) or re-apply any previously paid issue fee to the application identified above. Petitioner is advised that, whether a fee is indicated as being due or not, the Issue Fee Transmittal Form **must** be completed and timely submitted to avoid abandonment. Note the language in bold text on the first page of the Notice of Allowance and Fee(s) Due (PTOL-85).

UNITED STATES PATENT AND TRADEMARK OFFICE

Commissioner for Patents
United States Patent and Trademark Office
P.O. Box 1450
Alexandria, VA 22313-1450
www.uspto.gov

RICHARD ARON OSMAN
SCIENCE AND TECHNOLOGY LAW GROUP
242 AVE VISTA DEL OCEANO
SAN CLEMEMTE CA 92672

COPY MAILED

FEB 17 2006

OFFICE OF PETITIONS

In re Application of :
Selvin et al. :
Application No. 10/976,546 : ON PETITION
Filed: October 28, 2004 :
Title of Invention: Polynucleotide Barcoding :

This is a decision on the petition "Precautionary Petition under 37 CFR 1.137" filed January 6, 2006.

The petition to revive under 37 CFR § 1.137(a) is **DISMISSED** as involving moot issues.

A Notice of Informal Application was purportedly mailed on April 5, 2005 indicating that the oath or declaration submitted did not comply with 37 CFR 1.63 because it failed to provide the citizenship of the inventors. Petitioner states the Notice which was faxed by the Office of Initial Patent Examination does not contain a mail date and was never received.

A review of the Office record shows that the Notice of Informal Application does not contain a date stamp. Additional Office records do not reflect when the Notice was actually mailed. Further the Notice does not state the time period allowed for correcting the formalities. Accordingly, the time period for reply cannot be computed pursuant to MPEP 710.01 (a). As such the application has not been held to be abandoned.

A petition fee has not been charged.

Telephone inquiries should be directed to the undersigned at (571) 272-3215.

Charlema R. Grant

Charlema R. Grant
Petitions Attorney
Office of Petitions

UNITED STATES PATENT AND TRADEMARK OFFICE

UNITED STATES DEPARTMENT OF COMMERCE
United States Patent and Trademark Office
Address: COMMISSIONER FOR PATENTS
P.O. Box 1450
Alexandria, Virginia 22313-1450
www.uspto.gov

Patent Group
Microsoft Corporation
One Microsoft Way
Redmond, WA 98052

Mail Date: 04/21/2010

Applicant	: Kristen Miller	: DECISION ON REQUEST FOR
Patent Number	: 7640552	: RECALCULATION of PATENT
Issue Date	: 12/29/2009	: TERM ADJUSTMENT IN VIEW
Appliction No	: 10/976,562	: OF WYETH AND NOTICE OF INTENT TO
Filed	: 10/29/2004	: ISSUE CERTIFICATE OF CORRECTION
		:

The Request for Recalculation is **GRANTED** to the extent indicated.

The patent term adjustment has been determined to be **1308** days. The USPTO will *sua sponte* issue a certificate of correction reflecting the amount of PTA days determined by the recalculation.

Prior to the issuance of the certificate of correction, the USPTO will afford patentee an opportunity to be heard and request reconsideration. Accordingly, patentee has **one month or thirty (30) days**, whichever is longer, to file a request for reconsideration of this patent term adjustment calculation. See 35 U.S.C. 154(b)(3)(B)(ii) and 37 CFR 1.322(a)(4). No extensions of time will be granted under 37 CFR 1.136.

Patentee should use document code PET.OP if electronically filing a request for reconsideration of this patent term adjustment calculation. The patentee must also include the information required by 37 CFR 1.705(b)(2) and the fee required by 37 CFR 1.18(e). If patentee does not file a timely request for reconsideration of this patent term adjustment calculation including the information required by 37 CFR 1.705(b)(2) and the fee required by 37 CFR 1.18(e), the USPTO will issue a certificate of correction reflecting the PTA determination noted above.

Patentee should be aware that in order to preserve the right to review in the United States District Court for the District of Columbia of the USPTO patent term adjustment determination, patentee must ensure that he or she also take the steps required under 35 U.S.C. 154(b)(4)(A) in a timely manner. Nothing in the request for recalculation should be construed as providing an alternative time frame for commencing a civil action under 35 U.S.C. 154(b)(4)(A).

Any questions concerning this decision should be directed to the Office of Patent Legal Administration at 571-272-7702.

UNITED STATES PATENT AND TRADEMARK OFFICE

COMMISSIONER FOR PATENTS
UNITED STATES PATENT AND TRADEMARK OFFICE
P.O. BOX 1450
ALEXANDRIA, VA 22313-1450
www.uspto.gov

JOHN S. BEULICK (12729)
c/o ARMSTRONG TEASDALE, LLP
ONE METROPOLITAN SQUARE
SUITE 2600
ST. LOUIS, MO 63102-2740

COPY MAILED

JAN 22 2008

OFFICE OF PETITIONS

In re Application of	:	
Thomas Ory Moniz, et. al.	:	
Application No. 10/976,590	:	ON PETITION
Filed: October 29, 2004	:	
Attorney Docket No. 133479	:	

This is a decision on the petition under 37 CFR 1.137(b), filed on February 15, 2007, to revive the above-identified application.

The application became abandoned for failure to timely respond to the Notice of Allowance and Fee(s) Due mailed October 13, 2006. A Notice of Abandonment was mailed on February 7, 2007.

37 CFR 1.137(b)(3) requires a statement that the entire delay in filing the required reply from the due date for the reply until the filing of a grantable petition pursuant to 37 CFR 1.137(b) was unintentional. Since the statement contained in the instant petition varies from the language required by 37 CFR 1.137(b)(3), the statement is being construed as the statement required by 37 CFR 1.137(b)(3) and petitioner must notify the Office if this is **not** a correct interpretation of the statement.

The petition satisfies the requirements of 37 CFR 1.137(b), in that, petitioner has supplied (1) the reply in the form of $1,400 for payment of the issue fee and $300 for payment of the publication fee; (2) the petition fee of $1,500; and (3) an adequate statement of unintentional delay. Therefore, the petition is **GRANTED**.

This application file is being referred to the Office of Data Management for further processing into a patent.

Telephone inquiries concerning this decision should be directed to the undersigned at (571) 272-3226.

Andrea Smith
Petitions Examiner
Office of Petitions

UNITED STATES PATENT AND TRADEMARK OFFICE

Commissioner for Patents
United States Patent and Trademark Office
P.O. Box 1450
Alexandria, VA 22313-1450
www.uspto.gov

WPAT, PC
INTELLECTUAL PROPERTY ATTORNEYS
2030 MAIN STREET, SUITE 1300
IRVINE CA 92614

COPY MAILED

JUN 30 2008

OFFICE OF PETITIONS

In re Application of	:
LIU et al.	:
Application No.: 10/976,599	: DECISION ON PETITION
Filed: October 28, 2004	: UNDER 37 CFR 1.78(a)(3)
Attorney Docket No.: 18106-009	:

This is a decision on the petition under 37 CFR 1.78(a)(3), filed July 12, 2007, to accept an unintentionally delayed claim under 35 U.S.C. §§ 120 and 365(c) for the benefit of priority to prior-filed PCT Application No. PCT/CN02/00534 set forth in the amendment filed concurrently with the instant petition.

The petition is **GRANTED**.

The present nonprovisional application was filed after November 29, 2000, and the claim herein for the benefit of priority to the prior-filed nonprovisional applications is submitted after expiration of the period specified in 37 CFR 1.78(a)(2)(ii). Therefore, this is a proper petition under 37 CFR 1.78(a)(3).

A petition for acceptance of a claim for late priority under 37 CFR 1.78(a)(3) is only applicable to those applications filed on or after November 29, 2000. Further, the petition is appropriate only after the expiration of the period specified in 37 CFR 1.78(a)(2)(ii). In addition, the petition under 37 CFR 1.78(a)(3) must be accompanied by:

(1) the reference required by 35 U.S.C. § 120 and 37 CFR 1.78(a)(2)(i) of the prior-filed application, unless previously submitted;

(2) the surcharge set forth in § 1.17(t); and

(3) a statement that the entire delay between the date the claim was due under 37 CFR 1.78(a)(2)(ii) and the date the claim was filed was unintentional. The Commissioner may require additional information where there is a question whether the delay was unintentional.

The petition complies with the requirements for a grantable petition under 37 CFR 1.78(a)(3) in that (1) a reference to the prior-filed international application has been included in an amendment to the first sentence of the specification following the title, as provided by 37 CFR 1.78(a)(2)(iii); (2) the surcharge fee required by 37 CFR 1.17(t) has been submitted; and (3) the statement in the petition that "[t]he entire delay between the date the claim was due under 37 CFR 1.55(a)(1) [and] the date the claim was filed was unintentional" has been construed as meaning that the entire delay between the date the claim was due under 37 CFR 1.78(a)(2)(ii) and the date the claim was filed was unintentional. (The claim to priority is made under 37 CFR 1.78(a)(2)(ii) rather than 37 CFR 1.55(a)(1).) If this interpretation is incorrect, applicant must *immediately* notify the Office of PCT Legal Administration of such fact. Accordingly, having found that the instant petition for acceptance of an unintentionally delayed claim for the benefit of priority under 35 U.S.C. §§ 120 and 365(c) to the prior-filed PCT application satisfies the conditions of 37 CFR 1.78(a)(3), the petition is granted.

The granting of the petition to accept the delayed benefit claim to the prior-filed application under 37 CFR 1.78(a)(3) should not be construed as meaning that this application is entitled to the benefit of the prior-filed application. In order for this application to be entitled to the benefit of the prior-filed application, all other requirements under 35 U.S.C. §§ 120 and 365(c) and 37 CFR 1.78(a)(1) and (a)(2) must be met. Similarly, the fact that the corrected Filing Receipt accompanying this decision on petition includes the prior-filed applications should not be construed as meaning that applicant is entitled to the claim for benefit of priority to the prior-filed applications noted thereon. Accordingly, the examiner will, in due course, consider this benefit claim and determine whether this application is entitled to the benefit of the earlier filing date.

A corrected Filing Receipt, which includes the priority claim to the prior-filed international application, accompanies this decision on petition.

Any inquiries concerning this decision may be directed to Daniel Stemmer at (571) 272-3301. All other inquiries concerning either the examination procedures or status of the application should be directed to the Technology Center.

This matter is being referred to Technology Center Art Unit 1655 for appropriate action on the amendment filed July 12, 2007, including consideration by the examiner of applicant's

entitlement to claim benefit of priority under 35 U.S.C. §§ 120 and 365(c) to the prior-filed PCT application.

/Daniel Stemmer/

Daniel Stemmer
Legal Examiner
Office of Petitions and PCT
Legal Administration

Boris Milef
Legal Examiner
Office of Petitions and PCT
Legal Administration

ATTACHMENT: Corrected Filing Receipt

UNITED STATES PATENT AND TRADEMARK OFFICE

UNITED STATES DEPARTMENT OF COMMERCE
United States Patent and Trademark Office
Address: COMMISSIONER FOR PATENTS
P.O. Box 1450
Alexandria, Virginia 22313-1450
www.uspto.gov

APPLICATION NUMBER	FILING or 371(c) DATE	GRP ART UNIT	FIL FEE REC'D	ATTY.DOCKET.NO	TOT CLAIMS	IND CLAIMS
10/976,599	10/28/2004	1655	395	18106-009	15	3

CONFIRMATION NO. 7892

CORRECTED FILING RECEIPT

OC000000030723565

60951
WPAT, PC
INTELLECTUAL PROPERTY ATTORNEYS
2030 MAIN STREET, SUITE 1300
IRVINE, CA 92614

Date Mailed: 06/27/2008

Receipt is acknowledged of this non-provisional patent application. The application will be taken up for examination in due course. Applicant will be notified as to the results of the examination. Any correspondence concerning the application must include the following identification information: the U.S. APPLICATION NUMBER, FILING DATE, NAME OF APPLICANT, and TITLE OF INVENTION. Fees transmitted by check or draft are subject to collection. Please verify the accuracy of the data presented on this receipt. **If an error is noted on this Filing Receipt, please submit a written request for a Filing Receipt Correction. Please provide a copy of this Filing Receipt with the changes noted thereon. If you received a "Notice to File Missing Parts" for this application, please submit any corrections to this Filing Receipt with your reply to the Notice. When the USPTO processes the reply to the Notice, the USPTO will generate another Filing Receipt incorporating the requested corrections**

Applicant(s)

Suying Liu, Taipei County, TAIWAN;
Yiming Tsal, Taipei County, TAIWAN;

Power of Attorney:
Anthony King--49063

Domestic Priority data as claimed by applicant

This application is a CON of PCT/CN02/00534 08/02/2002

Foreign Applications

If Required, Foreign Filing License Granted: 12/09/2004

The country code and number of your priority application, to be used for filing abroad under the Paris Convention, is **US 10/976,599**

Projected Publication Date: Not Applicable

Non-Publication Request: No

Early Publication Request: No
**** SMALL ENTITY ****

Title

Medicament for prevention and treatment of bone fracture and osteoporosis

Preliminary Class

424

PROTECTING YOUR INVENTION OUTSIDE THE UNITED STATES

Since the rights granted by a U.S. patent extend only throughout the territory of the United States and have no effect in a foreign country, an inventor who wishes patent protection in another country must apply for a patent in a specific country or in regional patent offices. Applicants may wish to consider the filing of an international application under the Patent Cooperation Treaty (PCT). An international (PCT) application generally has the same effect as a regular national patent application in each PCT-member country. The PCT process **simplifies** the filing of patent applications on the same invention in member countries, but **does not result** in a grant of "an international patent" and does not eliminate the need of applicants to file additional documents and fees in countries where patent protection is desired.

Almost every country has its own patent law, and a person desiring a patent in a particular country must make an application for patent in that country in accordance with its particular laws. Since the laws of many countries differ in various respects from the patent law of the United States, applicants are advised to seek guidance from specific foreign countries to ensure that patent rights are not lost prematurely.

Applicants also are advised that in the case of inventions made in the United States, the Director of the USPTO must issue a license before applicants can apply for a patent in a foreign country. The filing of a U.S. patent application serves as a request for a foreign filing license. The application's filing receipt contains further information and guidance as to the status of applicant's license for foreign filing.

Applicants may wish to consult the USPTO booklet, "General Information Concerning Patents" (specifically, the section entitled "Treaties and Foreign Patents") for more information on timeframes and deadlines for filing foreign patent applications. The guide is available either by contacting the USPTO Contact Center at 800-786-9199, or it can be viewed on the USPTO website at http://www.uspto.gov/web/offices/pac/doc/general/index.html.

For information on preventing theft of your intellectual property (patents, trademarks and copyrights), you may wish to consult the U.S. Government website, http://www.stopfakes.gov. Part of a Department of Commerce initiative, this website includes self-help "toolkits" giving innovators guidance on how to protect intellectual property in specific countries such as China, Korea and Mexico. For questions regarding patent enforcement issues, applicants may call the U.S. Government hotline at 1-866-999-HALT (1-866-999-4158).

LICENSE FOR FOREIGN FILING UNDER

Title 35, United States Code, Section 184

Title 37, Code of Federal Regulations, 5.11 & 5.15

GRANTED

The applicant has been granted a license under 35 U.S.C. 184, if the phrase "IF REQUIRED, FOREIGN FILING LICENSE GRANTED" followed by a date appears on this form. Such licenses are issued in all applications where the conditions for issuance of a license have been met, regardless of whether or not a license may be required as

set forth in 37 CFR 5.15. The scope and limitations of this license are set forth in 37 CFR 5.15(a) unless an earlier license has been issued under 37 CFR 5.15(b). The license is subject to revocation upon written notification. The date indicated is the effective date of the license, unless an earlier license of similar scope has been granted under 37 CFR 5.13 or 5.14.

This license is to be retained by the licensee and may be used at any time on or after the effective date thereof unless it is revoked. This license is automatically transferred to any related applications(s) filed under 37 CFR 1.53(d). This license is not retroactive.

The grant of a license does not in any way lessen the responsibility of a licensee for the security of the subject matter as imposed by any Government contract or the provisions of existing laws relating to espionage and the national security or the export of technical data. Licensees should apprise themselves of current regulations especially with respect to certain countries, of other agencies, particularly the Office of Defense Trade Controls, Department of State (with respect to Arms, Munitions and Implements of War (22 CFR 121-128)); the Bureau of Industry and Security, Department of Commerce (15 CFR parts 730-774); the Office of Foreign AssetsControl, Department of Treasury (31 CFR Parts 500+) and the Department of Energy.

NOT GRANTED

No license under 35 U.S.C. 184 has been granted at this time, if the phrase "IF REQUIRED, FOREIGN FILING LICENSE GRANTED" DOES NOT appear on this form. Applicant may still petition for a license under 37 CFR 5.12, if a license is desired before the expiration of 6 months from the filing date of the application. If 6 months has lapsed from the filing date of this application and the licensee has not received any indication of a secrecy order under 35 U.S.C. 181, the licensee may foreign file the application pursuant to 37 CFR 5.15(b).

UNITED STATES PATENT AND TRADEMARK OFFICE

Commissioner for Patents
United States Patent and Trademark Office
P.O. Box 1450
Alexandria, VA 22313-1450
www.uspto.gov

SEYFARTH SHAW LLP
131 S. DEARBORN ST., SUITE2400
CHICAGO IL 60603-5803

COPY MAILED

APR 2 7 2007

OFFICE OF PETITIONS

In re Application of	:	
Nobuo Saito	:	
Application No.: 10/976612	:	ON PETITION
Filing or 371(c) Date: 10/29/2004	:	
Attorney Docket Number:	:	
37569-407400	:	

This is a decision on the Petition for Revival of an Application for Patent Abandoned Unintentionally Under 37 C.F.R. § 1.137(b), filed January 22, 2007.

This Petition is hereby **granted**.

Background

The above-identified application became abandoned for failure to timely reply to the non-final office action, mailed July 27, 2005. The Office action set a three (3) period for reply. Extensions of time under 37 CFR 1.136(a) were available. No reply having been received, the application became abandoned on October 28, 2005. A Notice of Abandonment was mailed February 8, 2006.

Applicant files the instant petition and Amendment in response to the Office action. Accordingly, the petition is granted.

This application is being referred to Technology Center Art Unit 1775 for processing of the Amendment filed with the petition in due course.

Telephone inquiries concerning this decision should be directed to the undersigned at (571) 272-3232.

Derek L. Woods
Attorney
Office of Petitions

UNITED STATES PATENT AND TRADEMARK OFFICE

UNITED STATES DEPARTMENT OF COMMERCE
United States Patent and Trademark Office
Address: COMMISSIONER FOR PATENTS
P.O. Box 1450
Alexandria, Virginia 22313-1450
www.uspto.gov

MCANDREWS HELD & MALLOY, LTD
500 WEST MADISON STREET
SUITE 3400
CHICAGO, IL 60661

Mail Date: 04/21/2010

Applicant	: Meng-An Pan	: DECISION ON REQUEST FOR
Patent Number	: 7606550	: RECALCULATION of PATENT
Issue Date	: 10/20/2009	: TERM ADJUSTMENT IN VIEW
Appliction No	: 10/976,639	: OF WYETH AND NOTICE OF INTENT TO
Filed	: 10/29/2004	: ISSUE CERTIFICATE OF CORRECTION
		:

The Request for Recalculation is **GRANTED** to the extent indicated.

The patent term adjustment has been determined to be **275** days. The USPTO will *sua sponte* issue a certificate of correction reflecting the amount of PTA days determined by the recalculation.

Prior to the issuance of the certificate of correction, the USPTO will afford patentee an opportunity to be heard and request reconsideration. Accordingly, patentee has **one month or thirty (30) days**, whichever is longer, to file a request for reconsideration of this patent term adjustment calculation. See 35 U.S.C. 154(b)(3)(B)(ii) and 37 CFR 1.322(a)(4). No extensions of time will be granted under 37 CFR 1.136.

Patentee should use document code PET.OP if electronically filing a request for reconsideration of this patent term adjustment calculation. The patentee must also include the information required by 37 CFR 1.705(b)(2) and the fee required by 37 CFR 1.18(e). If patentee does not file a timely request for reconsideration of this patent term adjustment calculation including the information required by 37 CFR 1.705(b)(2) and the fee required by 37 CFR 1.18(e), the USPTO will issue a certificate of correction reflecting the PTA determination noted above.

Patentee should be aware that in order to preserve the right to review in the United States District Court for the District of Columbia of the USPTO patent term adjustment determination, patentee must ensure that he or she also take the steps required under 35 U.S.C. 154(b)(4)(A) in a timely manner. Nothing in the request for recalculation should be construed as providing an alternative time frame for commencing a civil action under 35 U.S.C. 154(b)(4)(A).

Any questions concerning this decision should be directed to the Office of Patent Legal Administration at 571-272-7702.

UNITED STATES PATENT AND TRADEMARK OFFICE

UNITED STATES DEPARTMENT OF COMMERCE
United States Patent and Trademark Office
Address: COMMISSIONER FOR PATENTS
P.O. Box 1450
Alexandria, Virginia 22313-1450
www.uspto.gov

MORRISON & FOERSTER LLP
425 MARKET STREET
SAN FRANCISCO, CA 94105-2482

Mail Date: 04/21/2010

Applicant	: Homayoon Kazerooni	: DECISION ON REQUEST FOR
Patent Number	: 7628766	: RECALCULATION of PATENT
Issue Date	: 12/08/2009	: TERM ADJUSTMENT IN VIEW
Appliction No	: 10/976,652	: OF WYETH AND NOTICE OF INTENT TO
Filed	: 10/29/2004	: ISSUE CERTIFICATE OF CORRECTION
		:

The Request for Recalculation is **GRANTED** to the extent indicated.

The patent term adjustment has been determined to be **1351** days. The USPTO will *sua sponte* issue a certificate of correction reflecting the amount of PTA days determined by the recalculation.

Prior to the issuance of the certificate of correction, the USPTO will afford patentee an opportunity to be heard and request reconsideration. Accordingly, patentee has **one month or thirty (30) days**, whichever is longer, to file a request for reconsideration of this patent term adjustment calculation. See 35 U.S.C. 154(b)(3)(B)(ii) and 37 CFR 1.322(a)(4). No extensions of time will be granted under 37 CFR 1.136.

Patentee should use document code PET.OP if electronically filing a request for reconsideration of this patent term adjustment calculation. The patentee must also include the information required by 37 CFR 1.705(b)(2) and the fee required by 37 CFR 1.18(e). If patentee does not file a timely request for reconsideration of this patent term adjustment calculation including the information required by 37 CFR 1.705(b)(2) and the fee required by 37 CFR 1.18(e), the USPTO will issue a certificate of correction reflecting the PTA determination noted above.

Patentee should be aware that in order to preserve the right to review in the United States District Court for the District of Columbia of the USPTO patent term adjustment determination, patentee must ensure that he or she also take the steps required under 35 U.S.C. 154(b)(4)(A) in a timely manner. Nothing in the request for recalculation should be construed as providing an alternative time frame for commencing a civil action under 35 U.S.C. 154(b)(4)(A).

Any questions concerning this decision should be directed to the Office of Patent Legal Administration at 571-272-7702.

UNITED STATES PATENT AND TRADEMARK OFFICE

Commissioner for Patents
United States Patent and Trademark Office
P.O. Box 1450
Alexandria, VA 22313-1450
www.uspto.gov

STEPHEN DONOVAN
ALLERGAN, INC.
2525 DUPONT DRIVE, T2-7H
IRVINE, CA 92612

MAILED

FEB 17 2009

OFFICE OF PETITIONS

ON PETITION

In re Application of :
Terrence J. Hunt :
Application No. 10/976,672 :
Filed: October 29, 2004 :
Attorney Docket No. 17319CIP2DIV3

This is a decision on the petition, filed February 13, 2009 which is being treated as a petition under 37 CFR 1.313(c)(2) to withdraw the above-identified application from issue after payment of the issue fee.

The petition is **GRANTED**.

The above-identified application is withdrawn from issue for consideration of a submission under 37 CFR 1.114 (request for continued examination). See 37 CFR 1.313(c)(2).

Petitioner is advised that the issue fee paid on December 3, 2008 in the above-identified application cannot be refunded. If, however, the above-identified application is again allowed, petitioner may request that it be applied towards the issue fee required by the new Notice of Allowance.[1]

Telephone inquiries should be directed to Irvin Dingle at (571) 272-3210.

This matter is being referred to Technology Center AU 1645 for processing of the request for continued examination under 37 CFR 1.114 and for consideration of the concurrently filed Information Disclosure Statement.

/Irvin Dingle/
Irvin Dingle
Petitions Examiner
Office of Petitions

---

[1] The request to apply the issue fee to the new Notice may be satisfied by completing and returning the new Issue Fee Transmittal Form PTOL-85(b), which includes the following language thereon: Commissioner for Patents is requested to apply the Issue Fee and Publication Fee (if any) or re-apply any previously paid issue fee to the application identified above. Petitioner is advised that, whether a fee is indicated as being due or not, the Issue Fee Transmittal Form **must** be completed and timely submitted to avoid abandonment. Note the language in bold text on the first page of the Notice of Allowance and Fee(s) Due (PTOL-85).

UNITED STATES PATENT AND TRADEMARK OFFICE

Commissioner for Patents
United States Patent and Trademark Office
P.O. Box 1450
Alexandria, VA 22313-1450
www.uspto.gov
DIW 04-05

PALMER & DODGE, LLP
KATHLEEN M. WILLIAMS
111 HUNTINGTON AVENUE
BOSTON MA 02199

COPY MAILED

APR 0 6 2005

OFFICE OF PETITIONS

In re Application of	:
Communi et al.	:
Application No. 10/976,678	: DECISION DISMISSING
Filed: 29 December, 2004	: PETITION
Atty Docket No. 9409/2063	:

This is a decision in reference to the petition filed on 9 March, 2005, which is treated as a petition under 37 CFR 1.53 requesting that the above-identified application be accorded a filing date of 29 December, 2004, with Figures 2, 3, 4a, and 4b described in the specification as a part of the original disclosure.

On 29 December, 2004, the application, including five (5) sheets of drawings, was filed.

On 14 February, 2005, the Office of Initial Patent Examination (OIPE) mailed a Notice to File Missing Parts of Nonprovisional Application stating, *inter alia*, that the application had been accorded a filing date of 29 December, 2004, but that the drawings submitted were not acceptable because they did not comply with 37 CFR 1.84 and 1.121.

In response, on 9 March, 2005, the present petition was filed, accompanied by nine (9) sheets of drawings. Petitioners concede that Figures 2, 3, 4a, and 4b were inadvertently omitted from the application as filed, but state that the above-identified application is a continuation of prior Application No. 10/152,058, and incorporated the disclosure of the prior application by reference.

The petition is <u>dismissed</u>.

The mailing of a "Notice of Omitted Items" permits the applicant to either: (1) promptly establish prior receipt in the PTO of the drawing(s) at issue (generally by way of a date-stamped postcard receipt (MPEP 503)), or (2) promptly submit the omitted drawing(s) in a nonprovisional application and accept the date of

such submission as the application filing date. An applicant asserting that the missing drawings were in fact deposited in the PTO with the application papers must file a petition (and the appropriate petition fee) with evidence of such deposit. An applicant desiring to submit the omitted drawings in a nonprovisional application and accept the date of such submission as the application filing date must file any omitted drawing(s) with an oath or declaration in compliance with 37 CFR 1.63 and 1.64 referring to such drawing(s) and a petition under 37 CFR 1.182 (with the petition fee under 37 CFR 1.17(h)) requesting the later filing date within two months of the date of the "Notice of Omitted Items" (37 CFR 1.181(f)).

In this case, however, petitioners neither assert that the missing drawing figures were deposited on 29 October, 2004, nor request the 9 March, 2005 (the date the drawings were supplied), filing date.

MPEP 201.06(c) states that:

> . . . an applicant may incorporate by reference the prior application by including, in the application-as-filed, a statement that such specifically enumerated prior application or applications are "hereby incorporated herein by reference." The statement may appear in the specification or in the application transmittal letter. The inclusion of this incorporation by reference of the prior application(s) will permit an applicant to amend the continuing application to include any subject matter in such prior application(s), <u>without the need for a petition</u>. (emphasis supplied)

Obviously, in view of the incorporation by reference of the prior application, Figures 2, 3, 4a, and 4b described in the specification are not new matter if they was a part of the disclosure of the prior application.

Petitioner should file Figures 2, 3, 4a, and 4b as a preliminary amendment. If Figures 2, 3, 4a, and 4b are filed as a preliminary amendment, it will be reviewed by the examiner for new matter.

The application will be processed using only the application papers present on filing. The copy of Figures 2, 3, 4a, and 4b of the drawings filed with the present petition will not be processed for examination, but will be retained in the application file.

Receipt is acknowledged of the replacement drawings filed on 9 March, 2005. The replacement drawings are not considered part of the original disclosure and must be reviewed by the examiner for new matter

Petitioners should note that effective 8 December, 2004, the fee for a petition for a filing date is $400.00. As the present petition has been necessitated by applicant's filing error rather than an error on the part of the Office, the balance due of $270.00 will be charged to counsel's deposit account, No. 16-0085, as authorized on the transmittal letter filed with the application papers on 29 October, 2004.

The application is being referred to Initial Patent Examination Division for further processing with a filing date of 29 October, 2004, using only the application papers filed on that date.

Telephone inquiries concerning this matter may be directed to the undersigned at (571)272-3231.

DWood

Douglas I. Wood
Senior Petitions Attorney
Office of Petitions

UNITED STATES PATENT AND TRADEMARK OFFICE

Commissioner for Patents
United States Patent and Trademark Office
P.O. Box 1450
Alexandria, VA 22313-1450
www.uspto.gov

GOTTLIEB RACKMAN & REISMAN PC
270 MADISON AVENUE
8TH FLOOR
NEW YORK, NY 10016-0601

MAILED

FEB 25 2009

OFFICE OF PETITIONS

In re Application of Wang et al. :
Application No. 10/976,703 : Decision on Petition
Filing Date: October 29, 2004 :
Attorney Docket No. 4611/059 :

This is a decision on the petition under 37 CFR 1.137(b), filed September 12, 2008, to revive the above-identified application.

The petition is **granted**.

The above-identified application became abandoned for failure to reply in a proper manner to the final Office action mailed January 17, 2008, which set a shortened statutory period for reply of three (3) months. An extension of time under the provisions of 37 CFR 1.136(a) was not obtained. Accordingly, the above-identified application became abandoned on April 18, 2008.

The instant petition requests revival of the application.

A grantable petition under 37 CFR 1.137(b) must be accompanied by:

(1) the reply required to the outstanding Office action or notice, unless previously filed,
(2) the petition fee,
(3) a statement that the entire delay in filing the required reply from the due date for the reply until the filing of a grantable petition pursuant to 37 CFR 1.137(b) was unintentional, and
(4) a terminal disclaimer and fee if the application was filed on or before June 8, 1995 or if the application is a design application.

Petitioner has supplied a reply to the final Office action in the form of a Request for Continued Examination and submission. Petitioner has submitted the required petition fee of $1,540. Petitioner has stated the entire delay in filing the required reply from the due date for the reply until the filing of a grantable petition pursuant to 37 CFR 1.137(b) was unintentional.

Petitioner has met the requirements to revive the above-identified application pursuant to 37 CFR 1.137(b). Therefore, the petition is granted and the application is revived.

Technology Center Art Unit 2627 will be informed of the instant decision and the application will be further examined in due course.

Telephone inquiries regarding this communication should be directed to Petitions Attorney Steven Brantley at (571) 272-3203.

Charles Steven Brantley
Senior Petitions Attorney
Office of Petitions

UNITED STATES PATENT AND TRADEMARK OFFICE

Commissioner for Patents
United States Patent and Trademark Office
P.O. Box 1450
Alexandria, VA 22313-1450
www.uspto.gov

BUCKLEY, MASCHOFF & TALWALKAR LLC
50 LOCUST AVENUE
NEW CANAAN CT 06840

COPY MAILED

JUN 0 4 2008

OFFICE OF PETITIONS

In re Application of :
Wickersham :
Application No. 10/976,717 :
Filed: October 29, 2004 :
Attorney Docket No. P19221 :
For: SWITCHING REGULATOR
FREQUENCY CONTROL

ON PETITION

This is a decision on the petition under 37 CFR 1.181, filed November 16, 2007, requesting that the Office withdraw the holding of abandonment of the above-identified application.

The petition under 37 CFR 1.181 is **GRANTED**.

This application became abandoned as a result of petitioner's alleged failure to timely file a proper follow-up submission within two (2) months of the Notice of Appeal filed May 18, 2007. A Notice of Abandonment was mailed on November 14, 2007.

Petitioner requests withdrawal of the holding of abandonment based on the assertion that a timely and proper submission was made on May 18, 2007. It is noted that applicant filed a Pre-Appeal Brief Request for Review when applicant filed the Notice of Appeal on May 18, 2007.

Per 1296 O.G. 67 (July 12, 2005): Effective immediately, the USPTO is offering applicants an optional procedure to review the examiner's rejection prior to the actual filing of an appeal brief. The program is intended to spare applicants the added time and expense of preparing an appeal brief if a panel review determines an application is not in condition for appeal. This pilot program offers applicants an opportunity to request a review of identified matters on appeal employing an appeal conference currently employed in the Office, but prior to the filing of an appeal brief.

The Notice went on to explain: The request must be filed with the filing of a notice of appeal and before the filing of the appeal brief. No extensions of time are available for filing the request for review. The time period for filing an appeal brief will be reset to be one month from mailing of the decision on the request, or the balance of the two-month time period running from the receipt of the notice of appeal, whichever is greater. Further, the time period for filing of the appeal brief

is extendible under 37 CFR 1.136 based upon the mail date of the decision on the request or the receipt date of the notice of appeal, as applicable. To the extent that any existing USPTO rule is inconsistent with this pilot program, the rule is waived until regulations directed to pre-appeal brief conferences are promulgated, or the pilot program is ended. For example, if a request for a pre-appeal brief conference is filed with a notice of appeal, the time period set in 37 CFR 41.37(a)(1) is waived so that an appeal will not stand dismissed if an appeal brief is not filed within two months of the filing date of a notice of appeal, but is filed within one month of the decision on the request.

The USPTO extended the pilot pre-appeal brief conference program until further notice in an O.G. Notice (February 7, 2006).

The application is not abandoned because there has been no decision on the May 18, 2007 request. Thus, the time period for filing an appeal brief will be one month from the decision on the request.

The petition under 37 CFR 1.181 is **granted**, the holding of abandonment is withdrawn, and the November 14, 2007 Notice of Abandonment is **vacated**. No petition fee has been or will be charged in connection with this matter.

The application file will be forwarded to Technology Center A.U. 2838 for decision on the May 18, 2007 pre-appeal brief request for review.

Telephone inquiries pertaining to this matter may be directed to the undersigned at (571) 272-3230.

Shirene Willis Brantley

Shirene Willis Brantley
Senior Petitions Attorney
Office of Petitions
Office of the Deputy Commissioner
for Patent Examination Policy

UNITED STATES PATENT AND TRADEMARK OFFICE

Commissioner for Patents
United States Patent and Trademark Office
P.O. Box 1450
Alexandria, VA 22313-1450
www.uspto.gov

MARK A. FARLEY
OSTROLENK FABER GERB & SOFFEN, LLP
1180 AVENUE OF THE AMERICAS
NEW YORK, NY 10036-8403

COPY MAILED

DEC 17 2007

OFFICE OF PETITIONS

In re Patent No. 7,214,837	:	
Issue Date: May 8, 2007	:	
Application No. 10/976,737	:	ON PETITION
Filed: October 29, 2004	:	
Attorney Docket No. P/4658-2	:	

This is a decision on the petition under 37 CFR 1.182, filed August 24, 2007, requesting issuance of a duplicate Letters Patent for the above-identified application.

The petition is **granted**.

The Publishing Division is directed to issue duplicate Letter Patent.

Any questions concerning this matter may be directed to Irvin Dingle at (571) 272-3210. Any questions concerning issuance of the duplicate Letters Patent should be directed to either Krystal Paige at (703) 308-9250 ext. 139.

A copy of this decision is being forwarded to Publishing Division for issuance of a duplicate Letters Patent.

Irvin Dingle
Petitions Examiner
Office of Petitions

cc: Krystal Paige, South Tower 8th Floor, C-32 Fax (571) 270-9937.

OIPE IAP87
AUG 24 2007
PATENT & TRADEMARK OFFICE

10/976,737

P/4658-2 DAC/IFW

IN THE UNITED STATES PATENT AND TRADEMARK OFFICE

In re Patent Application of

Raj Madhukar DESHPANDE et al. Date: August 21, 2007

U.S. Patent No. 7,214,837 B2

Issued: May 8, 2007

For: PROCESS FOR PREPARATION OF MIXTURE OF ALCOHOLS AND KETONES BY LIQUID PHASE OXIDATION OF HIGHER ALKANES

Mail Stop Petitions
Commissioner for Patents
P.O. Box 1450
Alexandria, VA 22313-1450

PETITION UNDER 37 C.F.R. § 1.182 FOR REPLACEMENT OF ORIGINAL LETTERS PATENT

Sir:

This is a petition for a replacement original Letters Patent. The U.S. Patent Office has stated that the original Letters Patent was mailed on May 8, 2007. However, only the photocopies of the patent have been received by Applicants' representative.

This Petition is submitted by the undersigned, attorneys for the Patentee, to obtain a replacement original Letters Patent.

No fee is believed to be due with this Petition since the failure of Applicant's representative to receive the original Letters Patent was not due to any action or inaction on the part of either Applicants or their representatives. However, should the Office disagree and feel that a Petition fee is due, authorization is hereby provided to charge the Petition fee of $400.00 under 37 C.F.R. § 1.17(f) to Deposit Account No. 15-0700.

In the event the actual fee is greater or if any additional fee for fulfilling this request is required, the Patent and Trademark Office is authorized to charge the required amount to Deposit Account No. 15-0700.

Your assistance is appreciated.

I hereby certify that this correspondence is being deposited with the United States Postal Service with sufficient postage as First Class Mail in an envelope addressed to: Mail Stop Amendment, Commissioner for Patents, P.O. Box 1450, Alexandria, VA 22313-1450, on August 21, 2007

Mark A. Farley
Name of applicant, assignee or Registered Representative

Mark A. Farley
Signature

August 21, 2007
Date of Signature

RCF:MAF/jl

Respectfully submitted,

Mark A. Farley

Mark A. Farley
Registration No.: 33,170
OSTROLENK, FABER, GERB & SOFFEN, LLP
1180 Avenue of the Americas
New York, New York 10036-8403
Telephone: (212) 382-0700

08/27/2007 RFEKADU1 00000009 150700 7214837
01 FC:1462 400.00 DA

00859622.1

SPE RESPONSE FOR CERTIFICATE OF CORRECTION

Paper No.:20070806

DATE : August 6, 2007

TO SPE OF : ART UNIT 2863

SUBJECT : Request for Certificate of Correction on Patent No.: 10/976743
USPN # 7149650 B2

A response is requested with respect to the accompanying request for a certificate of correction.

Please complete this form and return with file, within **7** days to:
Certificates of Correction Branch - PK 3-910
Palm location **7590** - Tel. No. 305-8201

With respect to the change(s) requested, correcting Office and/or Applicant's errors, should the patent read as shown in the certificate of correction? No new matter should be introduced, nor should the scope or meaning of the claims be changed.

Thank You For Your Assistance **Certificates of Correction Branch**

The request for issuing the above-identified correction(s) is hereby:
Note your decision on the appropriate box.

☐ **Approved** **All** changes apply.

☒ **Approved in Part** Specify below which changes **do not** apply.

☐ **Denied** State the reasons for denial below.

Comments:

Changes made on page 1 of the certificate of correction have been denied entry, since no record of the cited references can be found in the file. Pages 2 appears to be corrections of typographical errors and are ~~therefore~~ therefore approved

SPE: John Barlow **Art Unit** 2863

PTO/SB/44 (04-05)
Approved for use through 04/30/2007. OMB 0651-0033
U.S. Patent and Trademark Office; U.S. DEPARTMENT OF COMMERCE
Under the Paperwork Reduction Act of 1995, no persons are required to respond to a collection of information unless it displays a valid OMB control number.
(Also Form PTO-1050)

UNITED STATES PATENT AND TRADEMARK OFFICE
CERTIFICATE OF CORRECTION

PATENT NO. : 7,149,650 B2

APPLICATION NO.: 10/976,743

ISSUE DATE : December 12, 2006

INVENTOR(S) : Grabscheid et al.

It is certified that an error appears or errors appear in the above-identified patent and that said Letters Patent is hereby corrected as shown below:

ON THE COVER PAGE

Under U.S. Patent Documents, please add the following:

X --	3,612,839	10/1971	DeWitt, et al.	235/151.35
X	3,974,248	8/1976	Atkinson	264/40.2
X	5,563,809	10/1996	Williams, et al.	364/560
X	5,893,055	4/1999	Chen	702/189
X	6,174,413	1/2001	Ruf, et al.	162/259
X	6,368,461	4/2002	Ruf. et al.	162/258
X	6,536,704	3/2003	Rautakorpi, et al.	242/534
X	6,564,117	5/2003	Chen, et al.	700/129

No Record in Patent File

Do Not ENTER

FOREIGN PATENT DOCUMENTS

X	WO	9515492	8/1995
X	EP	1 189 053	3/2002
X	WO	03025283	3/2003--.

MAILING ADDRESS OF SENDER (Please do not use customer number below):

Taylor & Aust, P.C.
P.O. Box 560
Avilla, IN 46710

This collection of information is required by 37 CFR 1.322, 1.323, and 1.324. The information is required to obtain or retain a benefit by the public which is to file (and by the USPTO to process) an application. Confidentiality is governed by 35 U.S.C. 122 and 37 CFR 1.14. This collection is estimated to take 1.0 hour to complete, including gathering, preparing, and submitting the completed application form to the USPTO. Time will vary depending upon the individual case. Any comments on the amount of time you require to complete this form and/or suggestions for reducing this burden, should be sent to the Chief Information Officer, U.S. Patent and Trademark Office, U.S. Department of Commerce, P.O. Box 1450, Alexandria, VA 22313-1450. DO NOT SEND FEES OR COMPLETED FORMS TO THIS ADDRESS. **SEND TO: Attention Certificate of Corrections Branch, Commissioner for Patents, P.O. Box 1450, Alexandria, VA 22313-1450.**

If you need assistance in completing the form, call 1-800-PTO-9199 and select option 2.

PTO/SB/44 (04-05)
Approved for use through 04/30/2007. OMB 0651-0033
U.S. Patent and Trademark Office; U.S. DEPARTMENT OF COMMERCE
Under the Paperwork Reduction Act of 1995, no persons are required to respond to a collection of information unless it displays a valid OMB control number.
(Also Form PTO-1050)

UNITED STATES PATENT AND TRADEMARK OFFICE
CERTIFICATE OF CORRECTION

PATENT NO. : 7,149,650 B2

APPLICATION NO.: 10/976,743

ISSUE DATE : December 12, 2006

INVENTOR(S) : Grabscheid et al.

It is certified that an error appears or errors appear in the above-identified patent and that said Letters Patent is hereby corrected as shown below:

COLUMN 8
In line 17, please delete "for a computer", and substitute therefore --for computer--;
In line 38, please delete "and";
In line 40, between "deviations" and "for", insert --being stored--; and
In line 40, after "for", please delete "a", and substitute therefore --any--.

COLUMN 9
In line 2, please delete "and".

MAILING ADDRESS OF SENDER (Please do not use customer number below):

Taylor & Aust, P.C.
P.O. Box 560
Avilla, IN 46710

This collection of information is required by 37 CFR 1.322, 1.323, and 1.324. The information is required to obtain or retain a benefit by the public which is to file (and by the USPTO to process) an application. Confidentiality is governed by 35 U.S.C. 122 and 37 CFR 1.14. This collection is estimated to take 1.0 hour to complete, including gathering, preparing, and submitting the completed application form to the USPTO. Time will vary depending upon the individual case. Any comments on the amount of time you require to complete this form and/or suggestions for reducing this burden, should be sent to the Chief Information Officer, U.S. Patent and Trademark Office, U.S. Department of Commerce, P.O. Box 1450, Alexandria, VA 22313-1450. DO NOT SEND FEES OR COMPLETED FORMS TO THIS ADDRESS. **SEND TO: Attention Certificate of Corrections Branch, Commissioner for Patents, P.O. Box 1450, Alexandria, VA 22313-1450.**

If you need assistance in completing the form, call 1-800-PTO-9199 and select option 2.

SPE RESPONSE FOR CERTIFICATE OF CORRECTION

DATE : 10/9/07

Paper No.: _____

TO SPE OF : **Technology Center** 2863

10/976743

SUBJECT : Request for Certificate of Correction on Patent No.: 7149650 B2

A response is requested with respect to the accompanying request for a certificate of correction.

Please complete this form and return with file, within 7 days to:

Palm location **7580, Certificates of Correction Branch – South Tower – 9A22**

If response is for an IFW, **return to employee (named below) via PUBSCofC Team in MADRAS.**

With respect to the change(s) requested, correcting Office and/or Applicant's errors, should the patent read as shown in the certificate of correction (COCIN)? No new matter should be introduced, nor should the scope or meaning of the claims be changed.

Thank You For Your Assistance

Elisha Evans
Certificates of Correction Branch
Tel. No. 703-308-9390 EXT 110

The request for issuing the above-identified correction(s) is hereby:

Note your decision on the appropriate box.

- ☐ **Approved** — **All** changes apply.
- ☐ **Approved in Part** — Specify below which changes **do not** apply.
- ☒ **Denied** — State the reasons for denial below.

Comments:

The examiner did not receive the IDS in the file prior to patenting and thus could not review the IDS submission while the application was pending. Thus, it is not appropriate to list these references as having been considered because they in fact had not been reviewed.

John Barlow
Supervisory Patent Examiner
Technology Center 2800

SPE — **Art Unit** 2863

UNITED STATES PATENT AND TRADEMARK OFFICE

Commissioner for Patents
United States Patent and Trademark Office
P.O. Box 1450
Alexandria, VA 22313-1450
www.uspto.gov

10-9-07

Patent No. : 7149650 B2
Ser. No. : 10/976743
Inventor(s) : Grabscheid, et al.
Issued : Dec. 12, 2006
Title : **SYSTEM FOR COMPUTER ASSISTED MONITORING OF A CROSS PROFILE OF A QUALITY PARAMETER IN A MATERIAL WEB**
Docket No. :

Re: Request for Certificate of Correction

Consideration has been given your request for the issuance of a certificate of correction for the above-identified patent.

The examiner did not receive the IDS in the file prior to patenting and thus could not review the IDS submission while application was pending. Thus, it is not appropriate to list the references as having been considered because they are in fact had not been reviewed.

In view of the foregoing, your request is hereby **denied**.

Elisha Evans
For Cecelia Newman, Supervisor
Decisions & Certificates
of Correction Branch
(703) 308-9390 ext. 110

Taylor & Aust, P.C.
142 S. Main Street
P.O. Box 560
Avilla, IN 46710

CBN/eme

UNITED STATES PATENT AND TRADEMARK OFFICE

COMMISSIONER FOR PATENTS
UNITED STATES PATENT AND TRADEMARK OFFICE
P.O. BOX 1450
ALEXANDRIA, VA 22313-1450
www.uspto.gov

OSLER, HOSKIN & HARCOURT LLP (BRP)
2100 - 1000 DE LA GAUCHETIERE ST. WEST
MONTREAL H3B4W-5 CA CANADA

COPY MAILED

SEP 2 0 2006

OFFICE OF PETITIONS

In re Application of	:	
Helmut Zauner	:	
Application No. 10/976,814	:	
Filed: November 1, 2004	:	DECISION ON
Title of Invention:	:	PETITION
EXHAUST CONTROL VALVE FOR INTERNAL	:	
COMBUSTION ENGINE	:	

This is a decision in response to the petition under 37 CFR 1.137(b), filed July 17, 2006, to revive the above-identified application. Petitioner avers non-receipt of the Notice to File Missing parts of Nonprovisional Application mailed December 13, 2004. The petition is properly treated as a request to withdraw the holding of abandonment under 37 CFR 1.181(a), and an alternative request under 37 CFR 1.137(b).

This Petition under 37 CFR 1.181 is **dismissed**.

The petition under 37 CFR 1.137(b) is **held in abeyance**.

Any further petition to withdraw the holding of abandonment must be submitted within TWO (2) MONTHS from the mail date of this decision. Extensions of time under 37 CFR 1.136(a) are permitted. The reconsideration request should include a cover letter entitled "Renewed Petition under [insert the applicable code section]." This is **not** final agency action within the meaning of 5 U.S.C. § 704.

The above-identified application became abandoned for failure to timely and properly reply to the Notice to File Missing parts of Nonprovisional Application, mailed December 13, 2004. The Notice set a two (2) month period for reply. No response having been received, the application became abandoned on February 5, 2005. A Notice of Abandonment was mailed September 12, 2005.

Applicant files the instant petition wherein Applicant avers that non-receipt of the Notice.

Applicant is advised that an allegation that an Office action was not received may be considered as a petition for the withdrawal of the holding of abandonment. If the allegation is adequately supported, the petition may be granted and a new Office action mailed. The showing required to establish non-receipt of an Office communication must include:

1. A statement from the Applicant stating that the Office communication was not received by the Applicant and attesting to the fact that a search of the file jacket and docket records indicate that the Office communication was not received.

2. A copy of the file jacket or docket record where the non-received Office communication would have been entered had it been received and docketed must be attached to and referenced in Applicant's statement.

Accordingly, Applicant's assertion, that the Office action was not received, is insufficient to justify withdrawing the holding of abandonment. Applicant must also attest to the fact that a search of the file jacket and docket records indicate that the Notice was not received, and provide a copy of the docket record (or file jacket) where the non-received Notice would have been entered had it been received and docketed.

Applicant is advised that the showing outlined above may not be sufficient if there are circumstances that point to a conclusion that the Office action may have been lost after receipt rather than a conclusion that the Office action was lost in the mail (e.g., if the practitioner has a history of not receiving Office actions).

In this regard, it is noted that the correspondence address has recently been changed from Vermont, USA to Quebec, Canada. Applicant must attest to the fact that the correspondence address of record was current at the time of the mailing of the Notice.

Applicant should file a Request for Reconsideration of Petition and include the necessary statements and copies of documents.

A decision on the petition filed under 37 CFR 1.137(b) will be held in abeyance for a period of two months pending the filing of a Request for Reconsideration of Petition under 37 CFR 1.181. If Applicant is unable or unwilling to comply with the provisions outlined above, Applicant should file a request for reconsideration of petition under 37 CFR 1.137(b).

Further correspondence with respect to this matter should be addressed as follows:

By mail: Commissioner for Patents
PO Box 1450
Alexandria, VA 22313-1450

By facsimile: (571) 273-8300
Attn: Office of Petitions

By hand: Customer Service Window
Randolph Building
401 Dulany Street
Alexandria, VA 22314

Telephone inquiries concerning this matter should be directed to the undersigned at (571) 272-3232.

Derek L. Woods
Attorney
Office of Petitions

UNITED STATES PATENT AND TRADEMARK OFFICE

Commissioner for Patents
United States Patent and Trademark Office
P.O. Box 1450
Alexandria, VA 22313-1450
www.uspto.gov

COPY MAILED

MAR 30 2007

OFFICE OF PETITIONS

OSLER, HOSKIN & HARCOURT LLP (BRP)
2100 - 1000 DE LA GAUCHETIERE ST. WEST
MONTREAL H3B4W-5 CA CANADA

RECEIVED
MAR 30 2007
OFFICE OF PETITIONS

CANCELLED

In re Application of	:	
Helmut Zauner	:	
Application No. 10/976814	:	
Filing or 371(c) Date: 11/01/2004	:	
Attorney Docket Number:	:	
1056450	:	ON PETITION

This is a decision on the "Renewed Petition Under 37 C.F.R. 1.181 and 37 C.F.R. 1.137(b)", filed December 19, 2006. The delay in treating this petition is regretted.

This Petition Under 37 C.F.R. 1.181 is hereby **granted**.

This Petition Under 37 C.F.R. 1.137(b) is hereby **dismissed as moot**.

Background

The above-identified application became abandoned for failure to timely and properly reply to the Notice to File Missing Parts of Nonprovisional Application (Notice), mailed December 13, 2004. The Notice required the application search fee and examination fee. The Notice set a two (2) month period for reply. Extensions of time under 37 CFR 1.136(a) were available. No reply having been received, the application became abandoned on February 14, 2005. A Notice of Abandonment was mailed September 12, 2005.

Applicant filed a petition to withdraw the holding of abandonment, or alternatively to revive the application under 37 CFR 1.137(b), on July 17, 2006. The petition to withdraw the holding of abandonment was dismissed in a Decision mailed September 20, 2006, for failing to meet the requirements of a grantable petition under 37 CFR 1.181. A decision on the petition under 1.137(b) was held in abeyance pending final resolution of the petition under 37 CFR 1.181.

The present renewed petition

With the present renewed petition, Applicant has demonstrated non-receipt of the Office communication by a preponderance of the evidence.

In view of the foregoing, the petition under 37 CFR 1.181 is granted. The holding of abandonment is hereby withdrawn.

This Petition Under 37 C.F.R. 1.137(b) is hereby dismissed as moot. Applicant may request a refund of the fee for the petition filed under 37 CFR 1.137(b) by writing to the Office of Finance, Refund Section. A copy of this Decision should be included with the request.

Receipt of the oath/declaration by this Office on July 17, 2006, is hereby acknowledged.

The application will be referred to the Office of Initial Patent Examination for continued processing, including processing if the oath/declaration, in due course.

Telephone inquiries concerning this matter should be directed to the undersigned at (571) 272-3232.

Derek L. Woods
Attorney
Office of Petitions

SPE RESPONSE FOR CERTIFICATE OF CORRECTION

DATE : 3/14/07

Paper No.: ____

TO SPE OF : ART UNIT 2851

SUBJECT : Request for Certificate of Correction for Appl. No.: 10/976848 Patent No.: 7145629B2

Please respond to this request for a certificate of correction within 7 days.

Please review the requested changes/corrections as shown in the **COCIN** document(s) in the IFW application image. No new matter should be introduced, nor should the scope or meaning of the claims be changed.

Please complete the response (see below) and forward the completed response to scanning using document code **COCX**.

Virginia Tolbert
Certificates of Correction Branch

703-308-9390 ext. 113

Thank You For Your Assistance

The request for issuing the above-identified correction(s) is hereby:
Note your decision on the appropriate box.

- ☒ **Approved** — **All** changes apply.
- ☐ **Approved in Part** — Specify below which changes **do not** apply.
- ☐ **Denied** — State the reasons for denial below.

Comments: No new matter has been introduced

Rutledge
SPE / Exmr

2851
Art Unit

SPE RESPONSE FOR CERTIFICATE OF CORRECTION

Paper No.: _____

DATE : 01/15/09

TO SPE OF : ART UNIT 1793

SUBJECT : Request for Certificate of Correction for Appl. No.: 10976877 Patent No.: 7441688 B2

Please respond to this request for a certificate of correction within 7 days.

FOR IFW FILES:

Please review the requested changes/corrections as shown in the **COCIN** document(s) in the IFW application image. No new matter should be introduced, nor should the scope or meaning of the claims be changed.

Please complete the response (see below) and forward the completed response to scanning using document code **COCX**.

FOR PAPER FILES:

Please review the requested changes/corrections as shown in the attached certificate of correction. Please complete this form (see below) and forward it with the file to:

Certificates of Correction Branch (CofC)
South Tower - 9A22
Palm Location 7580
You can fax the Directors/SPE response to 571-270-9990

_____
Certificates of Correction Branch
703-308-9390 ext. _____

Thank You For Your Assistance

The request for issuing the above-identified correction(s) is hereby:
Note your decision on the appropriate box.

- ☒ **Approved** — **All** changes apply.
- ☐ **Approved in Part** — Specify below which changes **do not** apply.
- ☐ **Denied** — State the reasons for denial below.

Comments: The changes do not change the scope or meaning of the claims

KS 1/22/08

SPE RESPONSE FOR CERTIFICATE OF CORRECTION

SPE JESSICA Ward

Jessica Ward

01/22/09

Art Unit 1793

UNITED STATES PATENT AND TRADEMARK OFFICE

CERTIFICATE OF CORRECTION

PATENT NO. : 7441688 B2
APPLICATION NO. : 10/976,877
ISSUE DATE : 10/28/08
INVENTOR(S) : HEERDEN, DAVID VAN

It is certified that error appears in the above-identified patent and that said Letters Patent is hereby corrected as shown below:

The Title Page, showing an illustrative figure, should be deleted and substitute therefor the attached Title Page.

Delete drawings sheet 1-12 and substitute therefor the drawing sheets, consisting of figs. 1-12 as shown on the attached page.

In claim 13, column 10, line 35, "claim 9," should read –claim 12,--.

US007441688B2

(12) **United States Patent**
Van Heerden et al.

(10) **Patent No.: US 7,441,688 B2**
(45) **Date of Patent: Oct. 28, 2008**

(54) **METHODS AND DEVICE FOR CONTROLLING PRESSURE IN REACTIVE MULTILAYER JOINING AND RESULTING PRODUCT**

(75) Inventors: **David Van Heerden**, Baltimore, MD (US); **Jesse Newson**, Timonium, MD (US); **Timothy Rude**, Timonium, MD (US); **Omar M. Knio**, Timonium, MD (US); **Timothy P. Weihs**, Baltimore, MD (US)

(73) Assignee: **Reactive Nanotechnologies**, Hunt Valley, MD (US)

(*) Notice: Subject to any disclaimer, the term of this patent is extended or adjusted under 35 U.S.C. 154(b) by 195 days.

(21) Appl. No.: **10/976,877**

(22) Filed: **Nov. 1, 2004**

(65) **Prior Publication Data**

US 2005/0121499 A1 Jun. 9, 2005

Related U.S. Application Data

(60) Provisional application No. 60/516,755, filed on Nov. 4, 2003.

(51) **Int. Cl.**
B23K 31/02 (2006.01)

(52) **U.S. Cl.** **228/102**; 228/234.1; 228/246

(58) **Field of Classification Search** 228/246
See application file for complete search history.

(56) **References Cited**

U.S. PATENT DOCUMENTS

3,158,927	A	12/1964	Saunders	
4,092,234	A *	5/1978	Horst et al.	204/297.05
4,607,779	A	8/1986	Burns et al.	
4,715,526	A	12/1987	MacNeil et al.	
5,038,996	A	8/1991	Wilcox et al.	
5,175,410	A	12/1992	Freedman et al.	
5,381,944	A	1/1995	Makowiecki et al.	
5,477,009	A	12/1995	Brendecke et al.	
5,538,795	A	7/1996	Barbee, Jr. et al.	
5,547,715	A	8/1996	Barbee, Jr. et al.	
5,956,576	A	9/1999	Toy et al.	
6,216,937	B1 *	4/2001	DeLaurentis et al.	228/13
6,413,800	B1	7/2002	Kyle	

(Continued)

FOREIGN PATENT DOCUMENTS

EP 0 907 064 A2 4/1999

(Continued)

OTHER PUBLICATIONS

U.S. Appl. No. 10/959,502, Van Heerden et al.

(Continued)

Primary Examiner—Kiley Stoner
(74) *Attorney, Agent, or Firm*—Finnegan, Henderson, Farabow, Garrett, & Dunner, L.L.P.

(57) **ABSTRACT**

The invention includes a method of joining two components. The method includes providing at least two components to be joined, a reactive multilayer foil, and a compliant element, placing the reactive multilayer foil between the at least two components, applying pressure on the two components in contact with the reactive multilayer foil via a compliant element, and initiating a chemical transformation of the reactive multilayer foil so as to physically join the at least two components. The invention also includes two components joined using the aforementioned method.

15 Claims, 12 Drawing Sheets

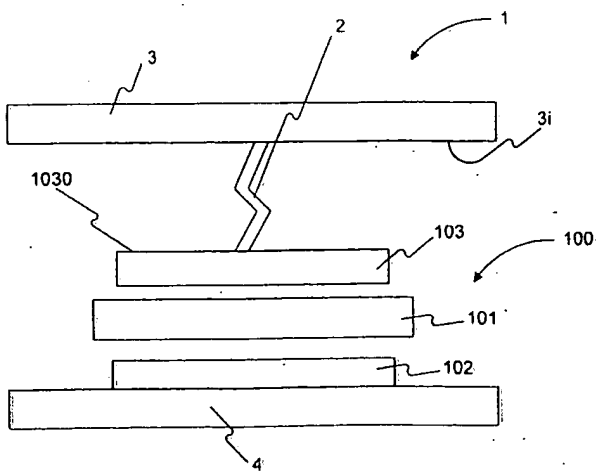

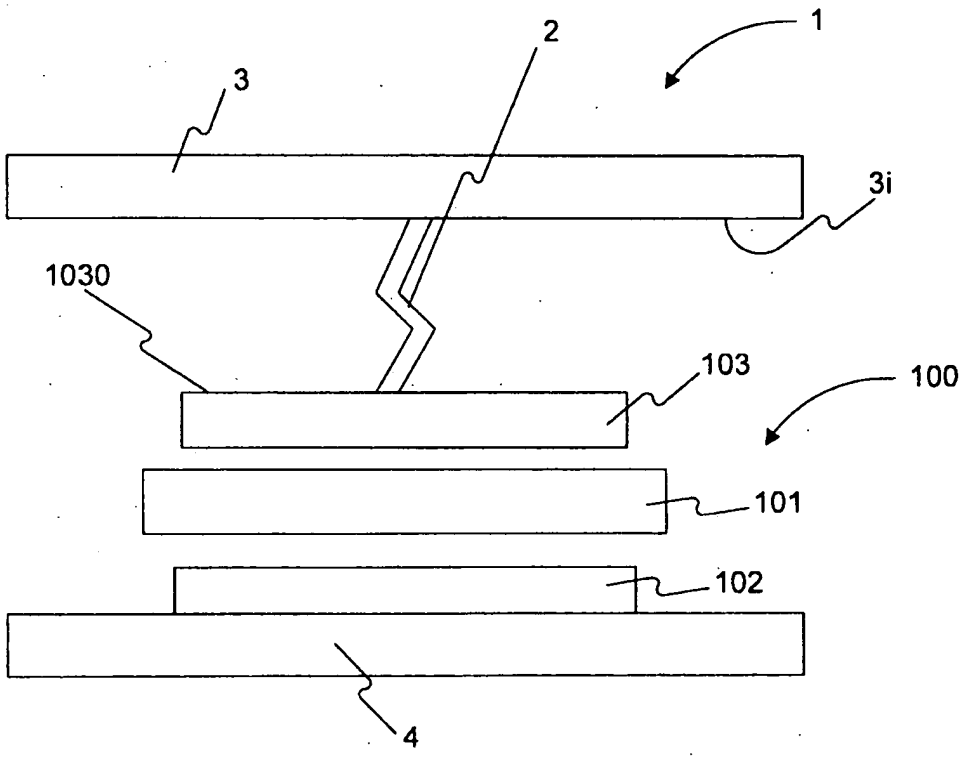

FIG. 1

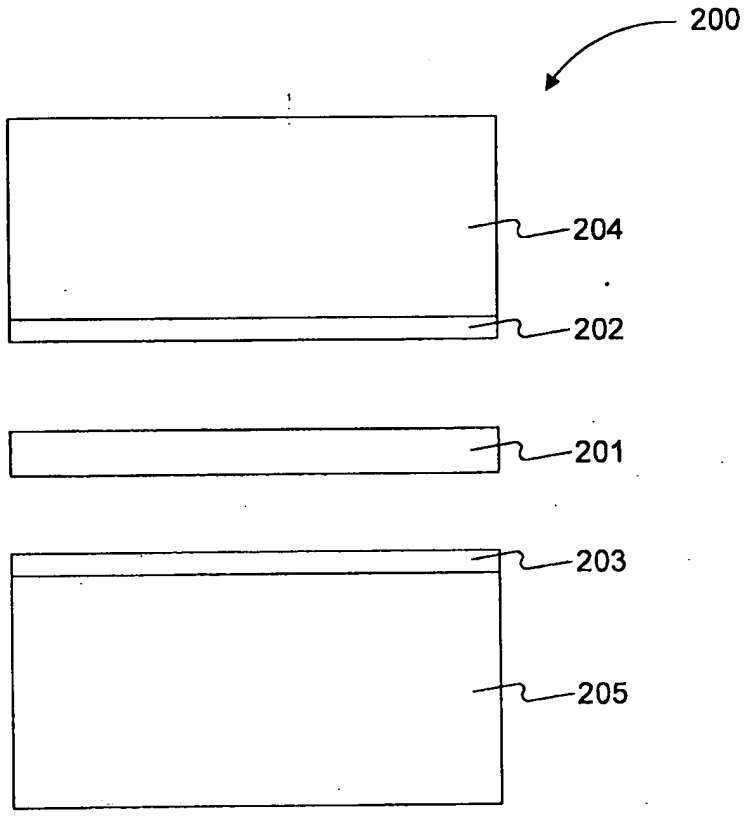

FIG. 2

(a)

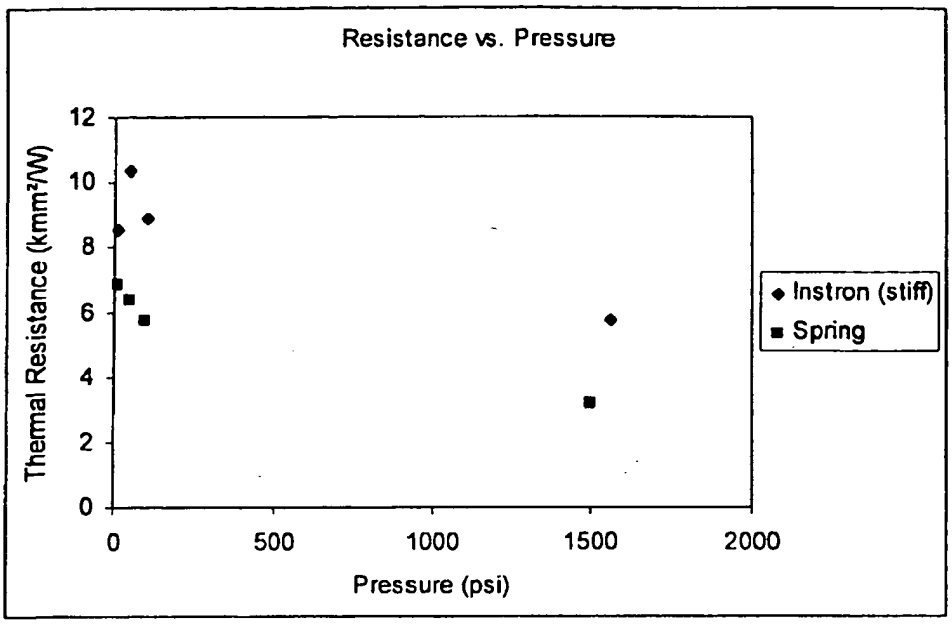
Resistance vs. Pressure
Thermal Resistance (kmm²/W)
12
10
8
6
4
2
0
0
500
1000
1500
2000
Pressure (psi)
Instron (stiff)
Spring

(b)

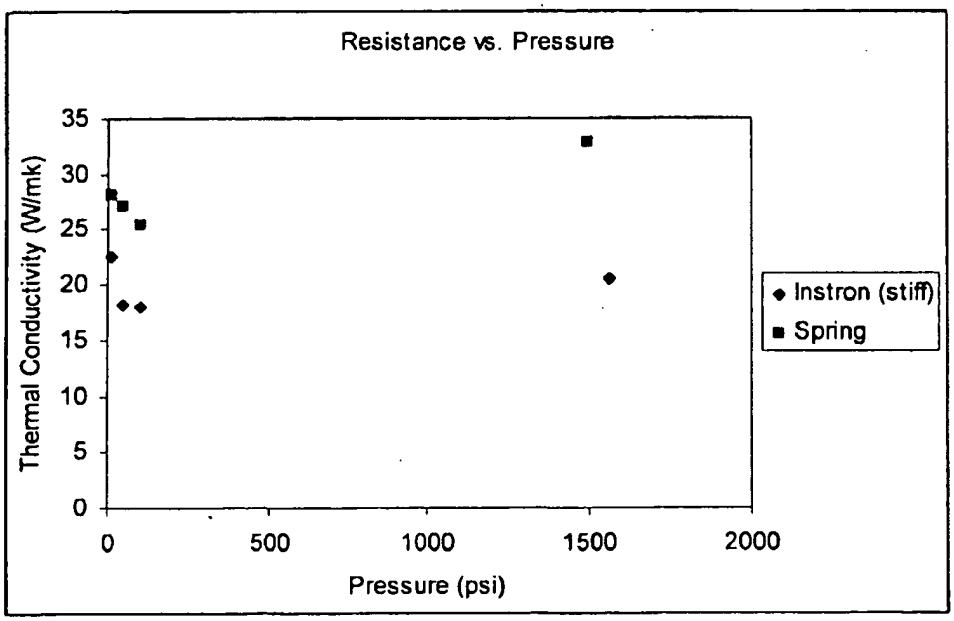
Resistance vs. Pressure
Thermal Conductivity (W/mk)
35
30
25
20
15
10
5
0
0
500
1000
1500
2000
Pressure (psi)
Instron (stiff)
Spring

FIGS. 3a & 3b

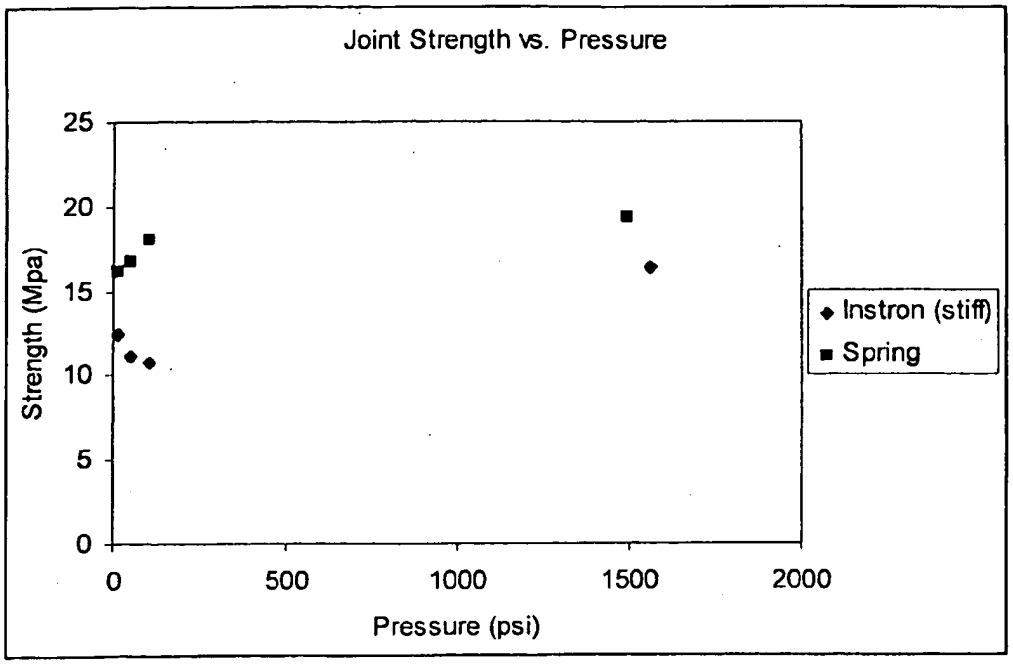
Joint Strength vs. Pressure
Strength (Mpa)
25
20
15
10
5
0
0
500
1000
1500
2000
Pressure (psi)
Instron (stiff)
Spring

FIG. 4

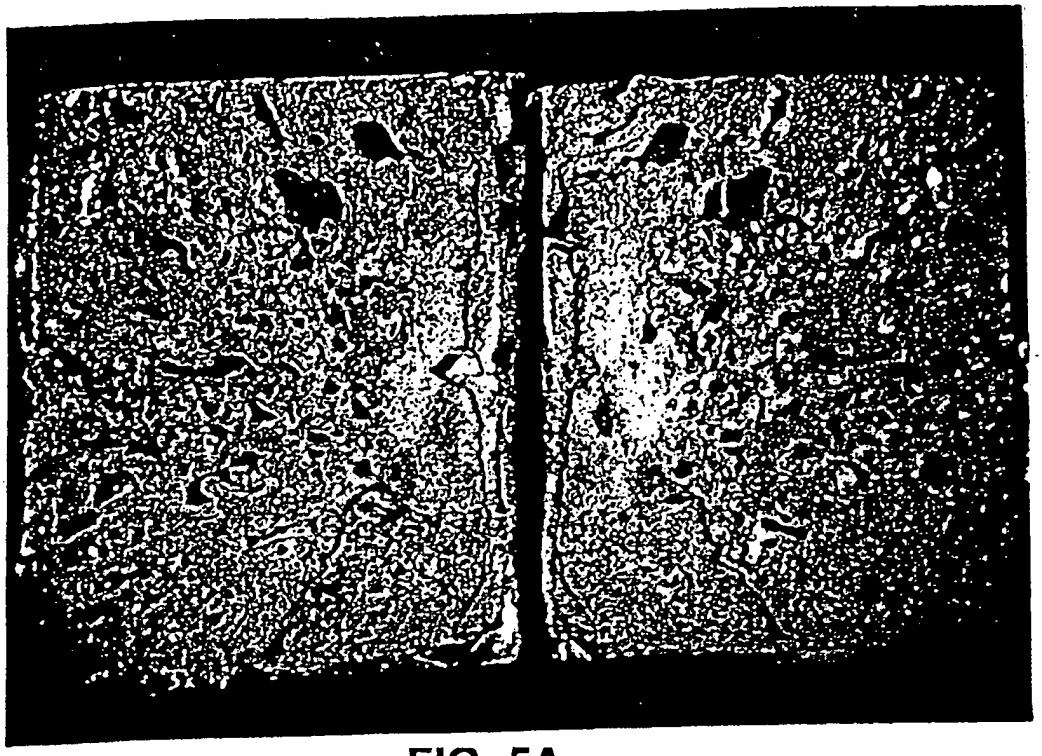

FIG. 5A

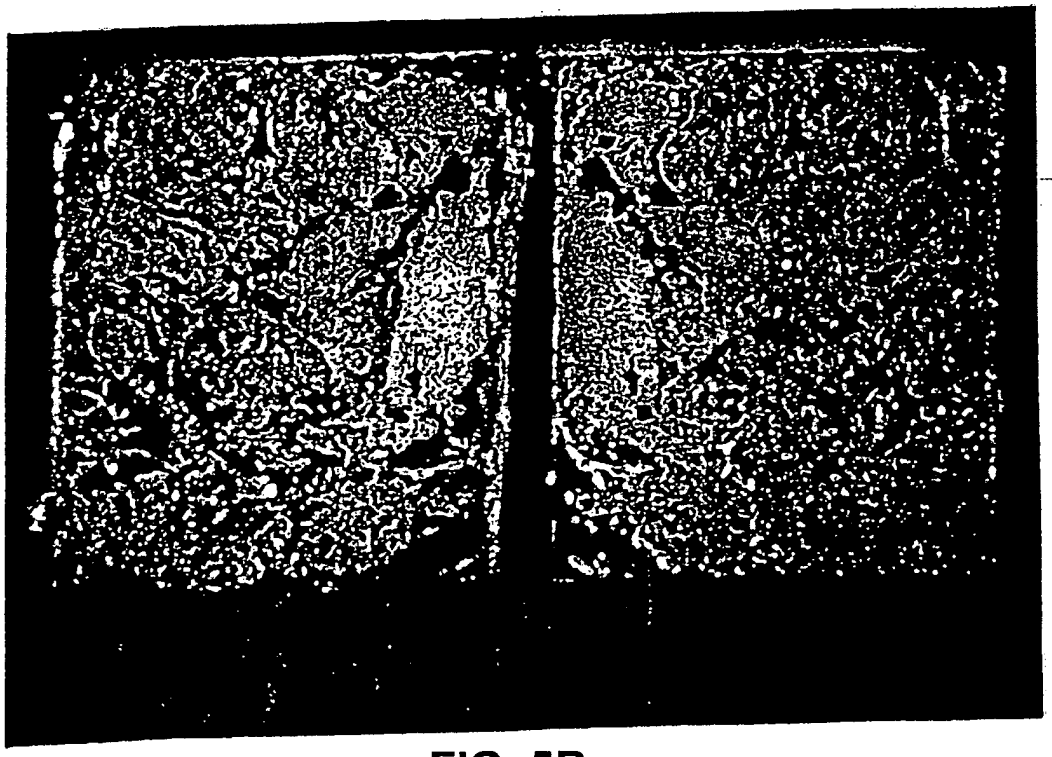

FIG. 5B

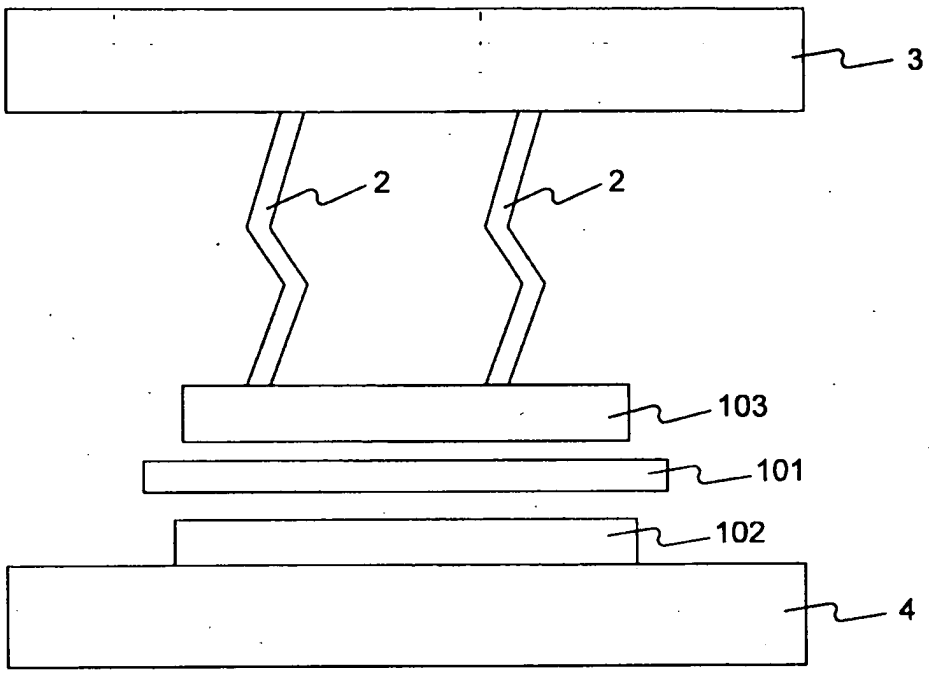

FIG. 6

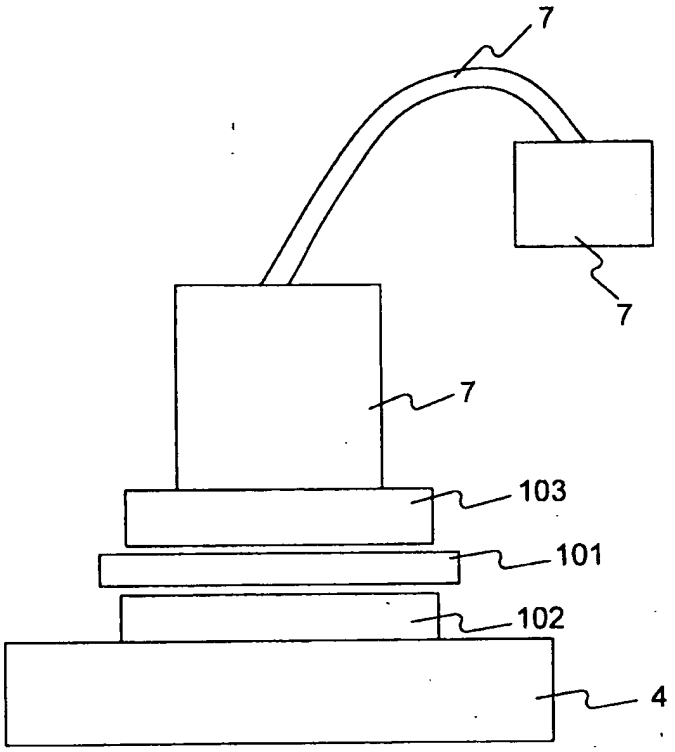

FIG. 7

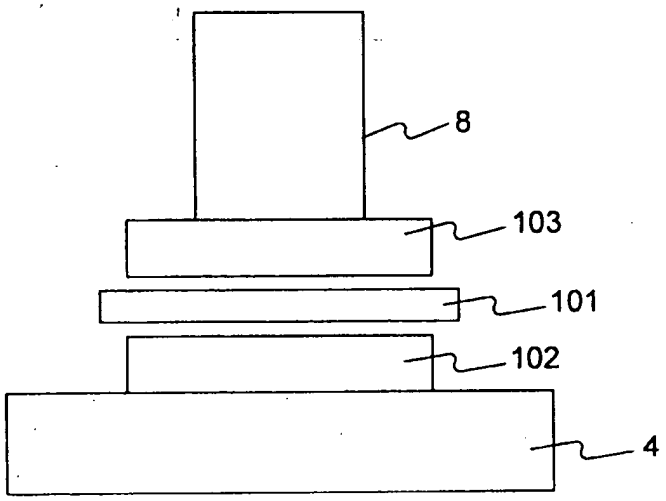

FIG. 8

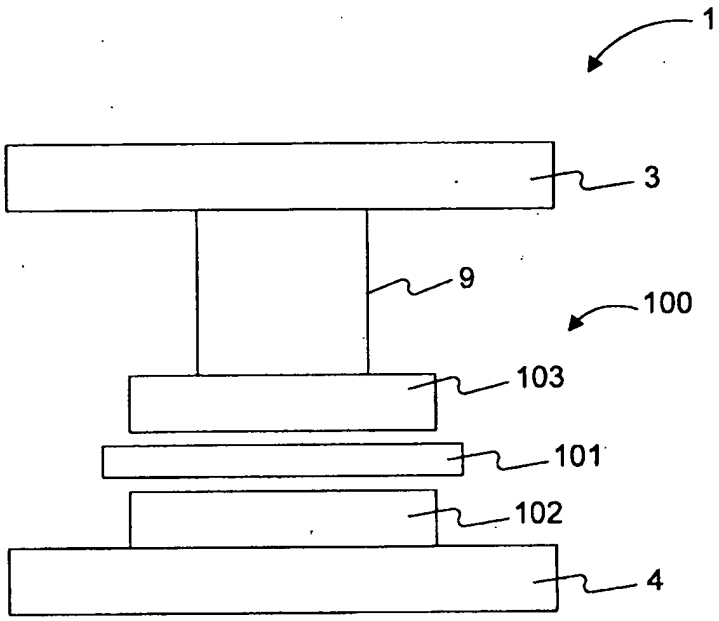

FIG. 9

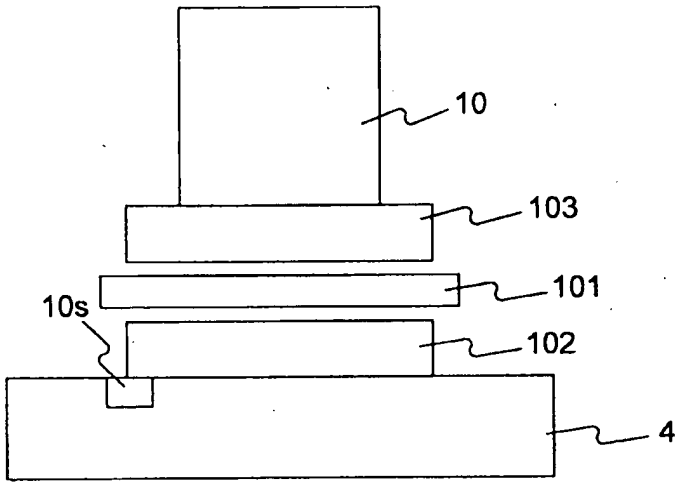

FIG. 10

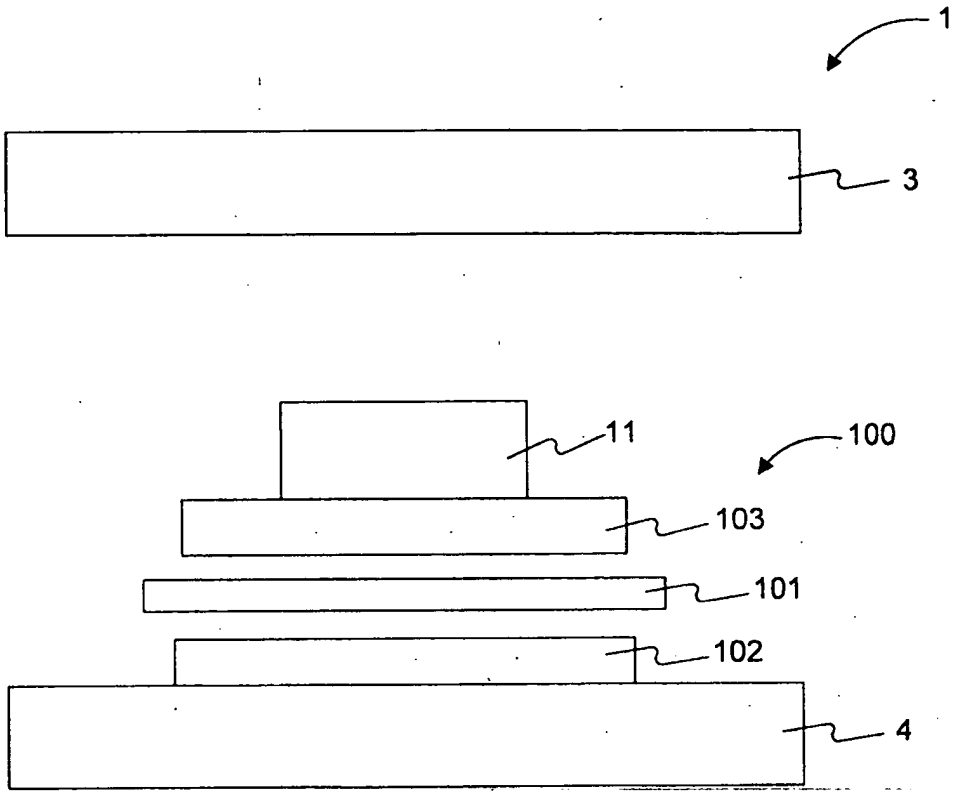

FIG. 11

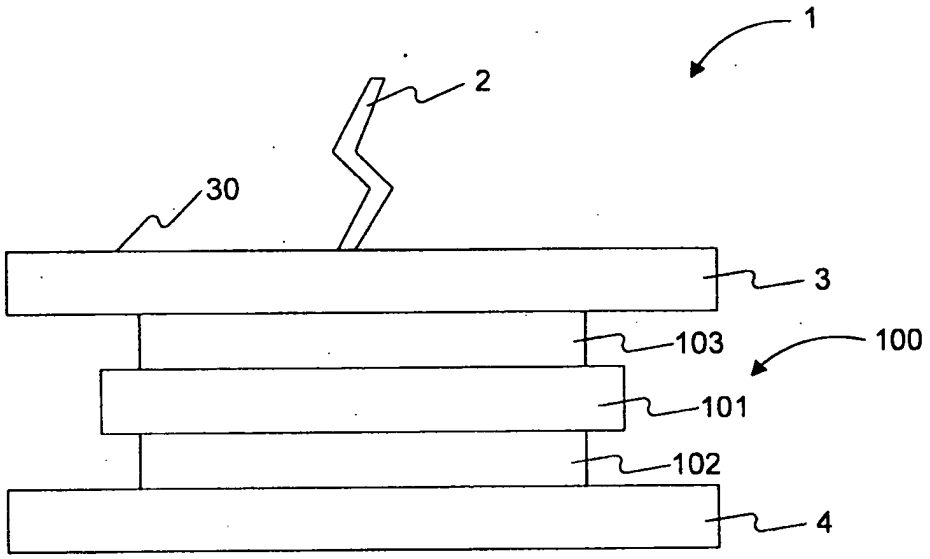

FIG. 12

UNITED STATES PATENT AND TRADEMARK OFFICE

Commissioner for Patents
United States Patent and Trademark Office
P.O. Box 1450
Alexandria, VA 22313-1450
www.uspto.gov

LEE & MORSE, P.C.
3141 FAIRVIEW PARK DRIVE
SUITE 500
FALLS CHURCH, VA 22042

MAILED

AUG 17 2009

OFFICE OF PETITIONS

In re Application of	:	
KIM, Dae-Youb	:	
Application No. 10/976,909	:	DECISION ON PETITION
Filed: November 01, 2004	:	TO WITHDRAW
Attorney Docket No. **12000.SMG.0544**	:	FROM RECORD
	:	

This is a decision on the Request to Withdraw as attorney or agent of record under 37 C.F.R. § 1.36(b), filed March 13, 2009.

The request is not approved because it is **moot**.

A review of the file record indicates that the power of attorney to LEE & MORSE, P.C. has been revoked by the assignee of the patent application on March 18, 2009. Accordingly, the request to withdraw under 37 C.F.R. § 1.36(b) is moot.

All future communications from the Office will continue to be directed to the below-listed address until otherwise notified by applicant.

Telephone inquires concerning this decision should be directed to Tredelle Jackson at 571-272-2783.

Tredelle D. Jackson
Petitions Examiner
Office of Petitions

cc: **MCNEELY BODENDORF LLP**
P.O. BOX 34175
WASHINGTON DC 20043

UNITED STATES PATENT AND TRADEMARK OFFICE

Commissioner for Patents
United States Patent and Trademark Office
P.O. Box 1450
Alexandria, VA 22313-1450
www.uspto.gov

OBLON SPIVAK MCCLELLAND MAIER & NEUSTADT PC
1940 DUKE STREET
ALEXANDRIA VA 22314

COPY MAILED

APR 1 0 2008

OFFICE OF PETITIONS

ON PETITION

In re Application of :
Takanuki, et al. :
Application No. 10/976,916 :
Filed: November 1, 2004 :
Attorney Docket No. 261233US2X :

This is a decision on the "PETITION UNDER 37 CFR §1.181(a)(3)", filed December 17, 2007, requesting that the Office issue a "Determination of Patent Term Adjustment under 35 U.S.C. 154(b)".

The petition is **GRANTED**.

A review of the application file indicates that the Office did not issue a "Determination of Patent Term Adjustment under 35 U.S.C. 154(b)" with the Notice of Allowance mailed September 17, 2007. Rather, the Office mailed two copies of form PTOL-85B.

The application is being forwarded to Group Art Unit 1756 for the generation and mailing of a "Determination of Patent Term Adjustment under 35 U.S.C. 154(b)".

Telephone inquiries regarding this decision should be directed to the undersigned at (571)272-3207.

Cliff Congo
Petitions Attorney
Office of Petitions

UNITED STATES PATENT AND TRADEMARK OFFICE

Commissioner for Patents
United States Patent and Trademark Office
P.O. Box 1450
Alexandria, VA 22313-1450
www.uspto.gov

MORRISON & FOERSTER LLP
1650 TYSONS BOULEVARD
SUITE 400
MCLEAN, VA 22102

COPY MAILED

SEP 14 2007

OFFICE OF PETITIONS

In re Application of	:	
WINER, Paul et al.	:	
Application No. 10/976,928	:	DECISION ON PETITION
Filed: November 01, 2004	:	TO WITHDRAW
Attorney Docket No. **INTEL1420-1 (P10076D)**	:	FROM RECORD

This is a decision on the Request to Withdraw as attorney or agent of record under 37 C.F.R. § 1.36(b), filed April 06, 2007.

The request is **NOT APPROVED** as moot.

A review of the file record indicates that the power of attorney to MORRISON & FOERSTER LLP has been revoked by the assignee of the patent application on May 15, 2007. Accordingly, the request to withdraw under 37 C.F.R. § 1.36(b) is moot.

All future communications from the Office will continue to be directed to the below-listed address until otherwise notified by applicant.

Telephone inquires concerning this decision should be directed to Tredelle Jackson at 571-272-2783.

Monica A. Graves
Petitions Examiner
Office of Petitions

cc: **DARBY & DARBY P.C.**
1500 K. STREET NW SUITE 250
WASHINGTON, DC 20005-1714

UNITED STATES PATENT AND TRADEMARK OFFICE

Commissioner for Patents
United States Patent and Trademark Office
P.O. Box 1450
Alexandria, VA 22313-1450
www.uspto.gov

MAILED

MAY 17 2010

OFFICE OF PETITIONS

DLA PIPER LLP (US)
4365 EXECUTIVE DRIVE
SUITE 1100
SAN DIEGO CA 92121-2133

In re Application of	:	
Sukumar et al.	:	
Application No. 10/976,932	:	DECISION ON PETITION
Filed: October 28, 2004	:	
Attorney Docket No. JHU1630-5	:	

This is a decision on the petition under the unintentional provisions of 37 CFR 1.137(b), filed March 18, 2010, to revive the above-identified application.

The petition is **GRANTED**.

This application became abandoned for failure to reply in a proper and timely manner to the final Office action mailed May 22, 2009. A one-month extension of time under the provisions of 37 CFR 1.136(a) was timely obtained. Accordingly, this application became abandoned on September 23, 2009. A Notice of Abandonment was mailed January 12, 2010.

The petition satisfies the requirements of 37 CFR 1.137(b) in that petitioner has supplied (1) the reply in the form of a Request for Continued Examination (RCE) and fee of $405.00 and the submission required by 37 CFR 1.114; (2) the petition fee of $810.00; and (3) a proper statement of unintentional delay.

It is not apparent whether the person signing the instant petition was ever given a power of attorney or authorization of agent to prosecute this patent. In accordance with 37 CFR 1.34(a), the signature appearing on the petition shall constitute a representation to the United States Patent and Trademark Office that he/she is authorized to represent the particular party in whose behalf he/she acts.

Additionally, an extension of time under 37 CFR 1.136 must be filed prior to the expiration of the maximum extendable period for reply. *See* In re Application of S., 8 USPQ2d 1630, 1631 (Comm'r Pats. 1988). Since the $490.00 extension of time fee submitted with the petition on March 18, 2010 was subsequent to the maximum extendable period for reply, this fee is unnecessary and will be refunded to petitioner's deposit account in due course.

Telephone inquiries concerning this decision should be directed to the undersigned at (571) 272-7751.

This matter is being referred to Technology Center 1637 for processing of the Request for Continued Examination under 37 CFR 1.114 and the Amendment filed with the instant petition.

Joan Olszewski

Joan Olszewski
Petitions Examiner
Office of Petitions

UNITED STATES PATENT AND TRADEMARK OFFICE

Commissioner for Patents
United States Patent and Trademark Office
P.O. Box 1450
Alexandria, VA 22313-1450
www.uspto.gov

KING & PARTNERS, PLC
F/B/O/ GENTEX CORPORATION
170 COLLEGE AVENUE, SUITE 230
HOLLAND MI 49423

COPY MAILED

NOV 09 2006

OFFICE OF PETITIONS

In re Application of :
Tonar et al. :
Application No. 10/976,940 :
Filed: October 29, 2004 :
Attorney Docket No. GEN-031171 :

DECISION ON PETITION

This is a decision on the petition under 37 CFR 1.181, filed September 5, 2006, to withdraw the holding of abandonment for the above-identified application.

On October 28, 2005, the Office mailed a final Office Action, which set a three-month shortened statutory period for reply. In the absence of a timely filed response, the application was held abandoned on January 29, 2006. A Notice of Abandonment was mailed on August 3, 2006.

In the present petition, the practitioner requested that the Office withdraw the holding of abandonment due to non-receipt of the final Office Action.

PETITION TO WITHDRAW THE HOLDING OF ABANDONMENT

A review of the record indicates no irregularity in the mailing of the final Office Action, and in the absence of any irregularity in the mailing, there is a strong presumption that the final Office Action was properly mailed to the address of record. This presumption may be overcome by a showing that the final Office action was not in fact received. The showing required to establish non-receipt of an Office communication must include a statement from the practitioner, stating that the practitioner did not receive the Office communication and attesting to the fact that a search of the file jacket and docket records indicates that the Office communication was not received. A copy of the docket record where the non-received Office communication would have been entered had it been received and docketed must be attached to and referenced in practitioner's statement. See MPEP 711.03(c)(I)(A). For example, if a three-month period for reply was set in the non-received Office communication, a copy of the docket report showing all replies docketed for a date three months from the mail date of the

non-received Office communication must be submitted as documentary proof of non-receipt of the Office communication. The showing outlined above may not be sufficient if there are circumstances that point to a conclusion that the Office communication may have been lost after receipt rather than a conclusion that the Office communication was lost in the mail (*e.g.* if the practitioner has a history of not receiving Office communications).

After reviewing the documents submitted on petition, the Office concludes that the showing of record is sufficient to warrant withdrawal of the holding of abandonment. The practitioner for applicants submitted copies of docket records where the final Office Action would have been entered had it been received and docketed. The practitioner attested to the fact that a search of the file jacket and docket records indicated that the final Office Action was not received. Accordingly, applicants presented the required showing under 37 CFR 1.181.

The petition under 37 CFR 1.181 is **GRANTED**. No petition fee is required.

Technology Center Art Unit 2872 has been advised of this decision. The matter is being referred to the Technology Center's technical support staff for mailing of a new final Office Action. The three (3) month shortened statutory time period for responding to the final Office Action will be set to run from the mailing date of the new final Office Action.

Telephone inquiries related to this decision may be directed to the undersigned at (571) 272-3211.

C. T. Donnell

Christina Tartera Donnell
Senior Petitions Attorney
Office of Petitions

UNITED STATES PATENT AND TRADEMARK OFFICE

COMMISSIONER FOR PATENTS
UNITED STATES PATENT AND TRADEMARK OFFICE
P.O. BOX 1450
ALEXANDRIA, VA 22313-1450
www.uspto.gov

Paper No.

VEDDER PRICE KAUFMAN & KAMMHOLZ
222 N. LASALLE STREET
CHICAGO, IL 60601

COPY MAILED
APR 1 9 2005
OFFICE OF PETITIONS

In re Application of	:	
Law et al.	:	DECISION ON
Application No. 10/976,949	:	PETITION
Filed: October 29, 2004	:	
Atty Docket No. 00100.04.0029	:	

This is a decision on the "PETITION UNDER 37 C.F.R. 1.53(e) NOTICE OF OMITTED ITEMS" filed January 10, 2005.

Application papers in the above-identified application were deposited on October 29, 2004. However, on December 10, 2004, the Initial Patent Examination Division mailed applicants a "Notice of Omitted Item(s) in a Nonprovisional Application." Applicants were notified that the application papers had been accorded a filing date of October 29, 2004; however, figure 5 appeared to have been omitted from the application.

In response, applicants timely filed the instant petition. Applicants contend that figure 5 was originally filed with the application papers filed on October 29, 2004. In support thereof, applicants submit a copy of their return postcard receipt. Applicants supplied a copy of Fig. 5 as originally filed.

A postcard receipt which itemizes and properly identifies the items which are being filed serves as *prima facie* evidence of receipt in the Office of all items listed thereon on the date stamped thereon by the Office. See MPEP 503. A review of

petitioner's postcard receipt reveals that: 1) it bears an Office of Initial Patent Examination (OIPE) of October 29, 2004 for the papers assigned application No. 10/976949; 2) it specifically identifies the items being filed, including "drawings (5 pgs.)" and 3) it lacks any annotation of non-receipt of any item denoted on the postcard. Thus, petitioners have shown that the items denoted, including the 5 pages of drawings, were filed on October 29, 2004.

The four sheets of drawings, already considered received in the Office on October 29, 2004, were reviewed along with the missing drawing sheet submitted on petition. These papers together constitute the items described on the postcard receipt as "drawings (5 pgs.)." Petitioner has shown that five sheets of drawings, including Fig. 5, were among the items present in the application on the date of deposit and should be included in the original application papers.

Accordingly, the petition is **GRANTED**.

Given the basis for granting the petition, the petition fee of $130 supplied is being refunded. It is noted that the petition included authorization to charge any deficiency in payment to petitioner's Deposit Account. Since the petition is being granted and the fee refunded, petitioner's Deposit Account will not be charged the $270.00 required to cover the deficiency in payment of the increased petition fee (to $400).

The application is being forwarded to the Office of Initial Patent Examination (OIPE) for:

- further processing with a filing date of October 29, 2004, using the application papers received in the Office on that date and the drawing sheet, containing Fig.5, re-supplied on petition filed January 10, 2005; and

- indication in Office records, as appropriate, that the application as originally filed included 5 sheets of drawings.

Applicants will receive appropriate notifications regarding the fees owed, if any, and other information in due course from OIPE.

Telephone inquiries related to this decision should be directed to the undersigned at 571-272-3219.

Nancy Johnson

Nancy Johnson
Senior Petitions Attorney
Office of Petitions

UNITED STATES PATENT AND TRADEMARK OFFICE

UNITED STATES DEPARTMENT OF COMMERCE
United States Patent and Trademark Office
Address: COMMISSIONER FOR PATENTS
P.O. Box 1450
Alexandria, Virginia 22313-1450
www.uspto.gov

INTEL CORPORATION
c/o CPA Global
P.O. BOX 52050
MINNEAPOLIS, MN 55402

Mail Date: 04/21/2010

Applicant	: William Chimitt	: DECISION ON REQUEST FOR
Patent Number	: 7583608	: RECALCULATION of PATENT
Issue Date	: 09/01/2009	: TERM ADJUSTMENT IN VIEW
Appliction No	: 10/977,004	: OF WYETH AND NOTICE OF INTENT TO
Filed	: 10/27/2004	: ISSUE CERTIFICATE OF CORRECTION
		:

The Request for Recalculation is **GRANTED** to the extent indicated.

The patent term adjustment has been determined to be **569** days. The USPTO will *sua sponte* issue a certificate of correction reflecting the amount of PTA days determined by the recalculation.

Prior to the issuance of the certificate of correction, the USPTO will afford patentee an opportunity to be heard and request reconsideration. Accordingly, patentee has **one month or thirty (30) days**, whichever is longer, to file a request for reconsideration of this patent term adjustment calculation. See 35 U.S.C. 154(b)(3)(B)(ii) and 37 CFR 1.322(a)(4). No extensions of time will be granted under 37 CFR 1.136.

Patentee should use document code PET.OP if electronically filing a request for reconsideration of this patent term adjustment calculation. The patentee must also include the information required by 37 CFR 1.705(b)(2) and the fee required by 37 CFR 1.18(e). If patentee does not file a timely request for reconsideration of this patent term adjustment calculation including the information required by 37 CFR 1.705(b)(2) and the fee required by 37 CFR 1.18(e), the USPTO will issue a certificate of correction reflecting the PTA determination noted above.

Patentee should be aware that in order to preserve the right to review in the United States District Court for the District of Columbia of the USPTO patent term adjustment determination, patentee must ensure that he or she also take the steps required under 35 U.S.C. 154(b)(4)(A) in a timely manner. Nothing in the request for recalculation should be construed as providing an alternative time frame for commencing a civil action under 35 U.S.C. 154(b)(4)(A).

Any questions concerning this decision should be directed to the Office of Patent Legal Administration at 571-272-7702.

Best Available Copy

SPE RESPONSE FOR CERTIFICATE OF CORRECTION

DATE 3/25/09

Paper No.: ——

TO SPE OF : ART UNIT 2618

SUBJECT : Request for Certificate of Correction for Appl. No.: 10/977005 Patent No.: 7357492 B2

Please respond to this request for a certificate of correction within 7 days.

FOR IFW FILES:

Please review the requested changes/corrections as shown in the **COCIN** document(s) in the IFW application image. No new matter should be introduced, nor should the scope or meaning of the claims be changed.

Please complete the response (see below) and forward the completed response to scanning using document code **COCX**.

FOR PAPER FILES:

Please review the requested changes/corrections as shown in the attached certificate of correction. Please complete this form (see below) and forward it with the file to:

Certificates of Correction Branch (CofC)
South Tower - 9A22
Palm Location 7580

Virginia Tolbert
Certificates of Correction Branch
703-308-9390 ext. 113

Thank You For Your Assistance

The request for issuing the above-identified correction(s) is hereby:
Note your decision on the appropriate box.

- ☒ **Approved** — All changes apply.
- ☐ **Approved in Part** — Specify below which changes **do not** apply.
- ☐ **Denied** — State the reasons for denial below.

Comments: _____

EDWARD F. URBAN
~~SUPERVISORY PATENT EXAMINER~~
SPE
TECHNOLOGY CENTER 2600

2618
Art Unit

PTOL-306 (REV. 7/03) U.S. DEPARTMENT OF COMMERCE Patent and Trademark Office

UNITED STATES PATENT AND TRADEMARK OFFICE

Commissioner for Patents
United States Patent and Trademark Office
P.O. Box 1450
Alexandria, VA 22313-1450
www.uspto.gov

THOMSON LICENSING, INC.
PATENT OPERATIONS
PO BOX 5312
PRINCETON NJ 08543-5312

COPY MAILED

SEP 01 2006

OFFICE OF PETITIONS

In re Application of
Louzir, et al.
Application No. 10/977,026
Filed: October 29, 2004
Attorney Docket No. PF030168

ON PETITION

This is a decision on the petition under 37 CFR 1.137(b), filed April 13, 2006 (certificate of mailing date April 10, 2006), to revive the above-identified application.

This application became abandoned for failure to timely pay the issue fee and publication fee within three (3) months of the mailing of the Notice of Allowance and Fee(s) Due, mailed January 3, 2006. Accordingly, this application became abandoned on April 4, 2006. A Notice of Abandonment has not been mailed.

Applicants have submitted a proper reply in the form of the issue fee, the publication fee and a completed PTOL-85, an acceptable statement of the unintentional nature of the delay in responding to the January 3, 2006 Notice of Allowance and Fee(s) Due, and the petition fee.

The petition is **granted**.

This application is being forwarded to Publishing Division for processing into a patent.

Telephone inquiries concerning this matter may be directed to the undersigned at (571) 272-3230.

Shirene Willis Brantley

Shirene Willis Brantley
Senior Petitions Attorney
Office of Petitions

UNITED STATES PATENT AND TRADEMARK OFFICE

COMMISSIONER FOR PATENTS
UNITED STATES PATENT AND TRADEMARK OFFICE
P.O. BOX 1450
ALEXANDRIA, VA 22313-1450
www.uspto.gov

Karambelas & Associates
Suite 303
655 Deep Valley Drive
Rolling Hills Estates CA 90274

COPY MAILED

AUG 18 2005

OFFICE OF PETITIONS

In re Application of :
Michel G. Clawson :
Application No. 10/977,033 : ON PETITION
Filed: October 29, 2004 :
Attorney Docket No. 300-3004 :

This is in response to the petition under 37 CFR 1.47(b) filed on June 13, 2005 (certificate of mailing dated June 9, 2005).[1]

With the present petition, applicant submitted a petition fee of $130.00 by credit card. However, effective December 8, 2004, the fee for a petition under 37 CFR 1.47(b) increased from $130.00 to $200.00. The rules and statutory provisions governing the operations of the USPTO require payment of a fee upon filing a petition. In this instance, the petition fee is deficient in the amount of $70.00. Moreover, applicant did not provide the Office with an authorization to charge a Deposit Account for any necessary fees. Therefore, the petition will not be treated on its merits, but rather will remain in the file until the Office receives a request for reconsideration of the petition under 37 CFR 1.47(b), as well as the balance of the fee due in the amount of $70.00.

Applicant must file both a request for reconsideration and pay the balance due of $70.00 within **TWO (2) MONTHS** of this decision. No extensions of time are permissible. Additionally, applicant may supplement the original petition as necessary to comply with the provisions of 37 CFR 1.47(b).

Further correspondence with respect to this matter should be addressed as follows and **to the attention of Senior Petitions Attorney Christina Tartera Donnell:**

By mail: Mail Stop Petition
Commissioner for Patents
P.O. Box 1450
Alexandria, VA 22313-1450

[1] Applicant obtained an extension of time for response within the fourth month.

By FAX: (571) 273-8300
Attn: Office of Petitions

By hand: Customer Service Window
Randolph Building
401 Dulany Street
Alexandria, VA 22314

Telephone inquiries related to this decision may be directed to the undersigned at (571) 272-3211.

Christina Tartera Donnell

Christina Tartera Donnell
Senior Petitions Attorney
Office of Petitions

UNITED STATES PATENT AND TRADEMARK OFFICE

Commissioner for Patents
United States Patent and Trademark Office
P.O. Box 1450
Alexandria, VA 22313-1450
www.uspto.gov

Karambelas & Associates
Suite 303
655 Deep Valley Drive
Rolling Hills Estates CA 90274

COPY MAILED

SEP 12 2005

OFFICE OF PETITIONS

In re Application of	:	
Michael G. Clawson	:	DECISION REFUSING STATUS
Application No. 10/977,033	:	UNDER 37 CFR 1.47(b)
Filed: October 29, 2004	:	
Attorney Docket No. 300-3004	:	

This is in response to the renewed petition under 37 CFR 1.47(b), filed August 31, 2005.

Applicant showed that Michael G. Clawson, the non-signing inventor, refused to join in the application after applicant mailed the application papers to him. Copies of the correspondence between applicant and the non-signing inventor accompany the present petition. Additionally, applicant identified the inventor's last known address and indicated that such action was necessary to preserve the rights of the party. Lastly, applicant paid the balance due for the petition fee.

A grantable petition under 37 CFR 1.47(b) requires: (1) proof that the non-signing inventor cannot be reached or refuses to sign the oath or declaration; (2) an acceptable oath or declaration; (3) the petition fee; (4) a statement of the last known address of the non-signing inventor; (5) proof of proprietary interest; and (6) proof of irreparable damage. Applicant lacks items (2) and (5) as set forth above.

Accordingly, the petition is dismissed.

Applicant is given TWO (2) MONTHS from the mailing date of this decision to respond, correcting the below-noted deficiencies. Any response should be entitled "Request for Reconsideration of Petition Under 37 CFR 1.47(b)" and may include an oath or declaration executed by the inventor. Failure to respond will result in abandonment of the application. Any extensions of time will be governed by 37 CFR 1.136(a).

As to item (2), applicant did not submit a declaration in compliance 37 CFR 1.63 and 1.64 with the present petition. Pursuant to MPEP 409.03(b)(A):

> The 37 CFR 1.47(b) applicant must make the oath required by 37 CFR 1.63 and 1.64 or 1.175. Where a corporation is the 37 CFR 1.47(b) applicant, an officer (President, Vice-President, Secretary, Treasurer, or Chief Executive Officer) thereof should normally sign the necessary oath or declaration. A corporation may authorize any person, including an attorney or agent registered to practice before the U.S. Patent and Trademark Office, to sign the application oath or declaration on its behalf. Where an oath or declaration is signed by a registered attorney or agent on behalf of a corporation, either proof of the attorney's or agent's authority in the form of a statement signed by an appropriate corporate officer must be submitted, or the attorney or agent may simply state that he or she is authorized to sign on behalf of the corporation. Where the oath or declaration is being signed on behalf of an assignee, see MPEP Section 324. An inventor may not authorize another individual to act as his or her agent to sign the application oath or declaration on his or her behalf. *Staeger v. Commissioner*, 189 USPQ 272 (D.D.C. 1976), *In re Striker*, 182 USPQ 507 (Comm'r Pat. 1973). Where an application is executed by one other than the inventor, the declaration required by 37 CFR 1.63 must state the full name, residence, post office address, and citizenship of the nonsigning inventor. Also, the title or position of the person signing must be stated if signing on behalf of a corporation under 37 CFR 1.47(b).

The declaration submitted on petition is <u>unsigned</u>. With any renewed petition, applicant must submit a declaration, which states the full name, residence, post office address, and citizenship of the non-signing inventor <u>and is signed by an appropriate individual</u> as indicated above.

As to item (5), applicant failed to show that Loral Skynet has sufficient proprietary interest in the subject matter to justify the filing of the application. Pursuant to MPEP 409.03(f):

> When an application is deposited pursuant to 37 CFR 1.47(b), the 37 CFR 1.47(b) applicant must prove:
>
> (A) the invention has been assigned to the applicant, or
>
> (B) the inventor has agreed in writing to assign the invention to the applicant, or
>
> (C) the applicant otherwise has sufficient proprietary interest in the subject matter to justify the filing of the application.
>
> If the application has been assigned, a copy of the assignment (in the English language) must be submitted. The assignment must clearly indicate that the invention described in the 37 CFR 1.47(b) application was assigned to the 37 CFR 1.47(b) applicant. A statement under 37 CFR 3.73(b) by the assignee must also be submitted (see MPEP § 324)....

> When an inventor has agreed in writing to assign an invention described in an application deposited pursuant to 37 CFR 1.47(b), a copy of that agreement should be submitted.... A typical agreement to assign is an employment agreement where an employee (nonsigning inventor) agrees to assign to his or her employer (37 CFR 1.47(b) applicant) all inventions made during employment. When such an agreement is relied on, it must be established by a statement of a person having firsthand knowledge of the facts that the invention was made by the employee while employed by the 37 CFR 1.47(b) applicant.
>
> If the invention has not been assigned, or if there is no written agreement to assign, the 37 CFR 1.47(b) applicant must demonstrate that he or she otherwise has a sufficient proprietary interest in the matter. A proprietary interest obtained other than by assignment or agreement to assign may be demonstrated by an appropriate legal memorandum to the effect that a court of competent jurisdiction (federal, state, or foreign) would by the weight of authority in that jurisdiction award title of the invention to the 37 CFR 1.47(b) applicant. The facts in support of any conclusion that a court would award title to the 37 CFR 1.47(b) applicant should be made of record by way of an affidavit or declaration of the person having firsthand knowledge of same. The legal memorandum should be prepared and signed by an attorney at law familiar with the law of the jurisdiction involved. A copy (in the English language) of a statute (if other than the United States statute) or a court decision (if other than a reported decision of a federal court or a decision reported in the United States Patents Quarterly) relied on to demonstrate a proprietary interest should be made of record.

Further correspondence with respect to this matter should be addressed as follows and **directed to the attention of Senior Petitions Attorney Christina Tartera Donnell**:

By mail: Mail Stop Petition
Commissioner for Patents
P.O. Box 1450
Alexandria, VA 22313-1450

By FAX: (571) 273-8300
Attn: Office of Petitions

By hand: Customer Service Window
Randolph Building
401 Dulany Street
Alexandria, VA 22314

Telephone inquiries related to this decision should be directed to the undersigned at (571) 272-3211.

Christina Tartera Donnell

Christina Tartera Donnell
Senior Petitions Attorney
Office of Petitions

UNITED STATES PATENT AND TRADEMARK OFFICE

Commissioner for Patents
United States Patent and Trademark Office
P.O. Box 1450
Alexandria, VA 22313-1450
www.uspto.gov

Karambelas & Associates
Suite 303
655 Deep Valley Drive
Rolling Hills Estates CA 90274

COPY MAILED

DEC 06 2005

OFFICE OF PETITIONS

In re Application of	:	
Michael G. Clawson	:	DECISION REFUSING STATUS
Application No. 10/977,033	:	UNDER 37 CFR 1.47(b)
Filed: October 29, 2004	:	
Attorney Docket No. 300-3004	:	

This is in response to the renewed petition under 37 CFR 1.47(b), filed November 25, 2005. Applicant obtained an extension of time for response within the first month. Accordingly, the petition is filed timely.

Applicant showed that Michael G. Clawson, the non-signing inventor, refused to join in the application after applicant mailed the application papers to him. Copies of the correspondence between applicant and the non-signing inventor accompany the present petition. Additionally, applicant identified the inventor's last known address and indicated that such action was necessary to preserve the rights of the party. Lastly, applicant submitted a proper declaration and paid the necessary fees.

A grantable petition under 37 CFR 1.47(b) requires: (1) proof that the non-signing inventor cannot be reached or refuses to sign the oath or declaration; (2) an acceptable oath or declaration; (3) the petition fee; (4) a statement of the last known address of the non-signing inventor; (5) proof of proprietary interest; and (6) proof of irreparable damage. Applicant lacks item (5) as set forth above.

Accordingly, the petition is dismissed.

Applicant is given TWO (2) MONTHS from the mailing date of this decision to respond, correcting the below-noted deficiencies. Any response should be entitled "Request for Reconsideration of Petition Under 37 CFR 1.47(b)" and may include an oath or declaration executed by the inventor. Failure to respond will result in abandonment of the application. Any extensions of time will be governed by 37 CFR 1.136(a).

As to item (5), applicant failed to show that Loral Skynet has sufficient proprietary interest in the subject matter to justify the filing of the application. As previously stated in the decision of September 12, 2005,

> A proprietary interest obtained other than by assignment or agreement to assign may be demonstrated by an appropriate legal memorandum to the effect that a court of competent jurisdiction (federal, state, or foreign) would by the weight of authority in that jurisdiction award title of the invention to the 37 CFR 1.47(b) applicant. The facts in support of any conclusion that a court would award title to the 37 CFR 1.47(b) applicant should be made of record by way of an affidavit or declaration of the person having firsthand knowledge of same. The legal memorandum should be prepared and signed by an attorney at law familiar with the law of the jurisdiction involved. A copy (in the English language) of a statute (if other than the United States statute) or a court decision (if other than a reported decision of a federal court or a decision reported in the United States Patents Quarterly) relied on to demonstrate a proprietary interest should be made of record.

Unfortunately, applicant failed to provide a copy of a statute or a court decision relied on to demonstrate a proprietary interest. Before a petition under 37 CFR 1.47(b) can be granted, applicant must submit a copy of the relevant statute or court decision, which supports the conclusions set forth in the legal memorandum.

Further correspondence with respect to this matter should be addressed as follows and **directed to the attention of Senior Petitions Attorney Christina Tartera Donnell**:

By mail: Mail Stop Petition
Commissioner for Patents
P.O. Box 1450
Alexandria, VA 22313-1450

By FAX: (571) 273-8300
Attn: Office of Petitions

By hand: Customer Service Window
Randolph Building
401 Dulany Street
Alexandria, VA 22314

Telephone inquiries related to this decision should be directed to the undersigned at (571) 272-3211.

Christina Tartera Donnell

Christina Tartera Donnell
Senior Petitions Attorney
Office of Petitions

UNITED STATES PATENT AND TRADEMARK OFFICE

Commissioner for Patents
United States Patent and Trademark Office
P.O. Box 1450
Alexandria, VA 22313-1450
www.uspto.gov

Karambelas & Associates
Suite 303
655 Deep Valley Drive
Rolling Hills Estates CA 90274

COPY MAILED
FEB 24 2006
OFFICE OF PETITIONS

In re Application of	:	
Michael G. Clawson	:	DECISION ACCORDING STATUS
Application No. 10/977,033	:	UNDER 37 CFR 1.47(b)
Filed: October 29, 2004	:	
Attorney Docket No. 300-3004	:	

This is in response to the renewed petition under 37 CFR 1.47(b), filed February 6, 2006.

Applicant showed that Michael G. Clawson, the non-signing inventor, refused to join in the application after applicant mailed the application papers to him. Copies of the correspondence between applicant and the non-signing inventor accompany the present petition. Applicant identified the inventor's last known address and indicated that such action was necessary to preserve the rights of the party. Applicant showed Loral Skynet has sufficient proprietary interest in the subject matter to justify the filing of the application through the submission of an appropriate legal memorandum, accompanied by a copy of a relevant court decision. Lastly, applicant submitted a proper declaration and paid the necessary fees.

This application and papers have been reviewed and found in compliance with 37 CFR 1.47(b). This application is hereby accorded Rule 1.47(b) status. As provided in Rule 1.47(c), this Office will forward notice of this application's filing to the non-signing inventor at the address given in the petition. Notice of the filing of this application will also be published in the Official Gazette.

This matter is being referred to Technology Center Art Unit 2664 for examination in due course.

Telephone inquiries related to this decision should be directed to the undersigned at (571) 272-3211.

Christina T. Donnell

Christina Tartera Donnell
Senior Petitions Attorney
Office of Petitions

UNITED STATES PATENT AND TRADEMARK OFFICE

Commissioner for Patents
United States Patent and Trademark Office
P.O. Box 1450
Alexandria, VA 22313-1450
www.uspto.gov

Michael G. Clawson
12822 Locbury Circle
Germantown MD 20874

COPY MAILED
FEB 24 2006
OFFICE OF PETITIONS

In re Application of :
Michael G. Clawson : LETTER
Application No. 10/977,033 :
Filed: October 29, 2004 :
Attorney Docket No. 300-3004 :

Dear Mr. Clawson:

You are named as the sole inventor in the above-identified United States patent application filed under the provisions of 35 U.S.C. 116 (United States Code) and 37 CFR 1.47(b), Rules of Practice in Patent Cases. Should a patent be granted on the application you will be designated therein as a sole inventor.

As a named inventor you are entitled to inspect any paper in the file wrapper of the application, order copies of all or any part thereof (at a prepaid cost per 37 CFR 1.19) or make your position of record in the application. Alternatively, you may arrange to do any of the preceding through a registered patent attorney or agent presenting written authorization from you. If you care to join the application, counsel of record (see below) would presumably assist you. Joining in the application would entail the filing of an appropriate oath or declaration by you pursuant to 37 CFR 1.63.

Requests for information regarding your application should be directed to the File Information Unit at (703) 308-2733. Information regarding how to pay for and order a copy of the application, or a specific paper in the application should be directed to Certification Division at (703) 308-9726 or 1-800-972-6382 (outside the Washington D.C. area).

Christina T. Donnell

Christina Tartera Donnell
Senior Petitions Attorney
Office of Petitions

Karambelas & Associates
Suite 303
655 Deep Valley Drive
Rolling Hills Estates CA 90274

SPE: E. Urban

SPE RESPONSE FOR CERTIFICATE OF CORRECTION

Paper No.: 20070212

DATE : 12/11/06

TO SPE OF : ART UNIT 2618

SUBJECT : Request for Certificate of Correction for Appl. No.: 10/977,053 Patent No.: 7058378

Please respond to this request for a certificate of correction within 7 days.

Please review the requested changes/corrections as shown in the **COCIN** document(s) in the IFW application image. No new matter should be introduced, nor should the scope or meaning of the claims be changed.

Please complete the response (see below) and forward the completed response to scanning using document code **COCX**.

Lamonte M. Newsome
Certificates of Correction Branch
703-308-9390 ext. 112

Thank You For Your Assistance

The request for issuing the above-identified correction(s) is hereby:

Note your decision on the appropriate box.

- ☑ **Approved** — All changes apply.
- ☐ **Approved in Part** — Specify below which changes **do not** apply.
- ☐ **Denied** — State the reasons for denial below.

Comments: _____

EDWARD F. URBAN
SUPERVISORY PATENT EXAMINER
TECHNOLOGY CENTER 2600

2618
Art Unit

UNITED STATES PATENT AND TRADEMARK OFFICE

UNITED STATES DEPARTMENT OF COMMERCE
United States Patent and Trademark Office
Address: COMMISSIONER FOR PATENTS
P.O. Box 1450
Alexandria, Virginia 22313-1450
www.uspto.gov

CROMPTON, SEAGER & TUFTE, LLC
1221 NICOLLET AVENUE
SUITE 800
MINNEAPOLIS, MN 55403-2420

Mail Date: 04/21/2010

Applicant	: John R. Moberg	: DECISION ON REQUEST FOR
Patent Number	: 7666217	: RECALCULATION of PATENT
Issue Date	: 02/23/2010	: TERM ADJUSTMENT IN VIEW
Appliction No	: 10/977,098	: OF WYETH
Filed	: 10/29/2004	:
		:

The Patentee's Request for Recalculation is **DISMISSED.**

This Request is deemed ineligible for consideration for one or more of the following reasons:

(A). The patent for which PTA recalculation is requested is either a design or reissue application or is a reexamination proceeding;

(B). The patent for which PTA recalculation is requested resulted from a utility or plant application filed under 35 USC 111(a) before May 29, 2000 and no CPA filed in the application on/after May 29, 2000;

(C). The patent for which PTA recalculation is requested resulted from an international application in which the international filing date was before May 29, 2000 and no CPA filed in the application on/after May 29, 2000;

(D). The patent for which PTA recalculation is requested issued on/after March 2, 2010;

(E). The Request for Recalculation was filed more than 180 days after the grant date of the patent and the request was not filed within two months of a dismissal of a request for reconsideration of the of the patent term under 37 CFR 1.705(d);

(F). The Request for Recalculation is not solely limited to USPTO pre-Wyeth interpretation of 35 U.S.C. 154(b)(2)(A);

or

(G). A civil action was filed pursuant to 35 U.S.C. 154(b)(4)(A)concerning the same patent at issue in this request.

Patentee may file a reply to this decision dismissing the Request for Recalculation. Patentee must file such reply within one month or thirty days, whichever is longer, of the mail date of the decision dismissing the Request for Recalculation. No fee is required if patentee is asserting in the reply that the dismissal for ineligibility is improper.

Patentee should use document code PET.OP if electronically filing a reply to this dismissal. If the USPTO finds that the request was improperly deemed ineligible, the USPTO will mail applicant a recalculation determination.

Patentee should be aware that in order to preserve the right to review in the United States District Court for the District of Columbia of the USPTO patent term adjustment determination, patentee must ensure that he or she also take the steps required under 35 U.S.C. 154(b)(4)(A). Nothing in the request for recalculation should be construed as providing an alternative time frame for commencing a civil action under 35 U.S.C. 154 (b)(4)(A).

Any questions concerning this decision should be directed to the Office of Patent Legal Administration at 571-272-7702.

UNITED STATES PATENT AND TRADEMARK OFFICE

Commissioner for Patents
United States Patent and Trademark Office
P.O. Box 1450
Alexandria, VA 22313-1450
www.uspto.gov

FOLEY HOAG, LLP
PATENT GROUP, WORLD TRADE CENTER WEST
155 SEAPORT BLVD
BOSTON, MA 02110

COPY MAILED

AUG 0 6 2007

OFFICE OF PETITIONS

In re Application of :
Andrew S. Greenberg :
Application No. 10/977,116 :
Filed: October 29, 2004 :
Attorney Docket No. TUV-005.02 :

NOTICE

This is a notice regarding your request for acceptance of a fee deficiency submission under 37 CFR 1.28, filed May 19, 2005. On September 1, 1998, the Court of Appeals for the Federal Circuit held that 37 CFR 1.28(c) is the sole provision governing the time for correction of the erroneous payment of the issue fee as a small entity. **See DH Technology v. Synergystex International, Inc. 154 F.3d 1333, 47 USPQ2d 1865 (Fed. Cir. Sept. 1, 1998).**

The Office no longer investigates or rejects original or reissue applications under 37 CFR 1.56. **1098 Off. Gaz. Pat. Office 502 (January 3, 1989)**. Therefore, nothing in this Notice is intended to imply that an investigation was done.

Your fee deficiency submission under 37 CFR 1.28 is hereby **ACCEPTED**.

This application is no longer entitled to small entity status. Accordingly, all future fees paid in this application must be paid at the large entity rate.

Inquiries related to this communication should be directed to the undersigned at (571) 272-3222.

Kenya A. McLaughlin
Petitions Attorney
Office of Petitions

UNITED STATES PATENT AND TRADEMARK OFFICE

Commissioner for Patents
United States Patent and Trademark Office
P.O. Box 1450
Alexandria, VA 22313-1450
www.uspto.gov

FOLEY AND LARDNER LLP
SUITE 500
3000 K STREET NW
WASHINGTON DC 20007

MAILED

JUN 29 2010

OFFICE OF PETITIONS

In re Application of :
Van Order et al. :
Application No. 10/977,119 : ON APPLICATION FOR
Filed: October 29, 2004 : PATENT TERM ADJUSTMENT
Atty Docket No. 026032-4831 :

This is in response to the REQUEST FOR RECONSIDERATION OF PATENT TERM ADJUSTMENT FOR PATENT APPLICATION UNDER 37 C.F.R. § 1.705(b), filed April 28, 2010. Applicants submit that the correct patent term adjustment to be indicated on the patent is one hundred sixty-nine (169) days, not one hundred twelve (112) days as calculated by the Office as of the mailing of the initial determination of patent term adjustment. Applicants request this correction solely on the basis that the Office will take in excess of three years to issue this patent.

As the instant application for patent term adjustment requests reconsideration of the patent term adjustment as it relates to the Office's failure to issue the patent within 3 years of the filing date, the application for patent term adjustment under 37 CFR 1.705(b) is **DISMISSED as PREMATURE**.

Knowledge of the actual date the patent issues is required to calculate the amount, if any, of additional patent term patentees are entitled to for Office failure to issue the patent within 3 years. See § 1.702(b). This is true even where a request for continued examination (RCE) was filed. The computer will not undertake the § 1.702(b) calculation until the actual date of issuance of the patent has been determined. Likewise, the computer will not calculate any further Office delay under § 1.702(a)(4) or applicant delay under § 1.704(c)(10) until the actual date of issuance of the patent has been determined. As such, the Office can not make a determination on the correctness of the patent term adjustment until the patent has issued.

Requesting reconsideration of the patent term adjustment to be indicated on the patent under 37 CFR 1.705(b) based on the initial determination of patent term adjustment and a projected issuance date of the patent or even the filing date of the request for continued examination is premature. Accordingly, it is appropriate to dismiss as premature such a request.

Rather than file an application for patent term adjustment under 37 CFR 1.705(b) contesting the 37 CFR 1.702(b) calculation at the time of the mailing of the notice of allowance, applicants are advised that they may wait until the time of the issuance of the patent and file a request for reconsideration of the patent term adjustment pursuant to 37 CFR 1.705(d). As the USPTO does not calculate the amount of time earned pursuant to 37 CFR 1.702(b) until the time of the issuance of the patent, the Office will consider any request for reconsideration of the patent term adjustment due to an error in the calculation of 37 CFR 1.702(b) to be timely if the request for reconsideration is filed within two months of the issuance of the patent. However, as to all other bases for contesting the initial determination of patent term adjustment received with the notice of allowance, applicants must timely file an application for patent term adjustment prior to the payment of the issue fee[1].

The Office acknowledges submission of the $200.00 fee set forth in 37 CFR 1.18(e) for consideration of the application for patent term adjustment under 37 CFR 1.705(b). This fee is required and will not be refunded.

Any request for reconsideration of the patent term adjustment indicated on the patent must be timely filed within 2 months after issuance pursuant to 37 CFR 1.705(d) and must include payment of the required fee under 37 CFR 1.18(e).

---

[1] For example, if applicant disputes both the calculation of patent term adjustment under 37 CFR 1.702(a)(1) for Office failure to mail a first Office action or notice of allowance not later than fourteen months after the date on which the application was filed and under 37 CFR 1.702(b) for Office failure to issue a patent within three years of the actual filing date of the application, then applicant must still timely file an application for patent term adjustment prior to the payment of the issue fee to contest the calculation of Office delay in issuing a first Office action or notice of allowance. See 37 CFR 1.705(b) and 35 U.S.C. 154(b)(3)(B). A dispute as to the calculation of the §1.702(a)(1) period raised on request for reconsideration of patent term adjustment under 37 CFR 1.705(d) will be dismissed as untimely filed.

The file does not indicate a change of address has been submitted, although the address given on the petition differs from the address of record. If appropriate, a change of address should be filed in accordance with MPEP 601.03. A courtesy copy of this decision is being mailed to the address given on the petition; however, the Office will mail all future correspondence solely to the address of record.

The Office of Data Management has been advised of this decision. This application is being referred to the Office of Data Management for issuance of the patent.

Telephone inquiries specific to this decision should be directed to the undersigned at (571) 272-3230.

Shirene Willis Brantley

Shirene Willis Brantley
Senior Petitions Attorney
Office of Petitions

CC: KARL F. REICHENBERGER
FOLEY & LARDNER LLP
777 EAST WISCONSIN AVENUE
MILWAUKEE, WI 53202-5306

UNITED STATES PATENT AND TRADEMARK OFFICE

Commissioner for Patents
United States Patent and Trademark Office
P.O. Box 1450
Alexandria, VA 22313-1450
www.uspto.gov

MAILED

JUL 14 2009

OFFICE OF PETITIONS

FISH & RICHARDSON .C.
PO BOX 1022
MINNEAPOLIS MN 55440-1022

In re Application of	:
Ravinder J. Singh et al	:
Application No. 10/977,121	: DECISION GRANTING PETITION
Filed: October 29, 2004	: UNDER 37 CFR 1.313(c)(2)
Attorney Docket No. 07039-565001	:

This is a decision on the petition under 37 CFR 1.313(c)(2), filed July 14, 2009, to withdraw the above-identified application from issue after payment of the issue fee.

The petition is **GRANTED**.

The above-identified application is withdrawn from issue for consideration of a submission under 37 CFR 1.114 (request for continued examination). *See* 37 CFR 1.313(c)(2).

Petitioner is advised that the issue fee paid on June 25, 2009 cannot be refunded. If, however, this application is again allowed, petitioner may request that it be applied towards the issue fee required by the new Notice of Allowance.[1]

Telephone inquiries should be directed to the undersigned at (571) 272-3208.

This application is being referred to Technology Center AU 1797 for processing of the request for continued examination under 37 CFR 1.114 and for consideration of the concurrently filed IDS.

/Karen Creasy/
Karen Creasy
Petitions Examiner
Office of Petitions

---

[1] *The request to apply the issue fee to the new Notice may be satisfied by completing and returning the new Part B – Fee(s) Transmittal Form (along with any balance due at the time of submission). Petitioner is advised that the Issue Fee Transmittal Form* ***must*** *be completed and timely submitted to avoid abandonment of the application.*

UNITED STATES PATENT AND TRADEMARK OFFICE

UNITED STATES DEPARTMENT OF COMMERCE
United States Patent and Trademark Office
Address: COMMISSIONER FOR PATENTS
P.O. Box 1450
Alexandria, Virginia 22313-1450
www.uspto.gov

SHEEHAN PHINNEY BASS & GREEN, PA
c/o PETER NIEVES
1000 ELM STREET
MANCHESTER, NH 03105-3701

Mail Date: 04/21/2010

Applicant	: Xiaodong Lu	: DECISION ON REQUEST FOR
Patent Number	: 7616084	: RECALCULATION of PATENT
Issue Date	: 11/10/2009	: TERM ADJUSTMENT IN VIEW
Appliction No	: 10/977,122	: OF WYETH AND NOTICE OF INTENT TO
Filed	: 10/29/2004	: ISSUE CERTIFICATE OF CORRECTION
		:

The Request for Recalculation is **GRANTED** to the extent indicated.

The patent term adjustment has been determined to be **310** days. The USPTO will *sua sponte* issue a certificate of correction reflecting the amount of PTA days determined by the recalculation.

Prior to the issuance of the certificate of correction, the USPTO will afford patentee an opportunity to be heard and request reconsideration. Accordingly, patentee has **one month or thirty (30) days**, whichever is longer, to file a request for reconsideration of this patent term adjustment calculation. See 35 U.S.C. 154(b)(3)(B)(ii) and 37 CFR 1.322(a)(4). No extensions of time will be granted under 37 CFR 1.136.

Patentee should use document code PET.OP if electronically filing a request for reconsideration of this patent term adjustment calculation. The patentee must also include the information required by 37 CFR 1.705(b)(2) and the fee required by 37 CFR 1.18(e). If patentee does not file a timely request for reconsideration of this patent term adjustment calculation including the information required by 37 CFR 1.705(b)(2) and the fee required by 37 CFR 1.18(e), the USPTO will issue a certificate of correction reflecting the PTA determination noted above.

Patentee should be aware that in order to preserve the right to review in the United States District Court for the District of Columbia of the USPTO patent term adjustment determination, patentee must ensure that he or she also take the steps required under 35 U.S.C. 154(b)(4)(A) in a timely manner. Nothing in the request for recalculation should be construed as providing an alternative time frame for commencing a civil action under 35 U.S.C. 154(b)(4)(A).

Any questions concerning this decision should be directed to the Office of Patent Legal Administration at 571-272-7702.

UNITED STATES PATENT AND TRADEMARK OFFICE

Commissioner for Patents
United States Patent and Trademark Office
P.O. Box 1450
Alexandria, VA 22313-1450
www.uspto.gov

13 SEP 2007

Patrick H. Higgins
Fox Rothschild LLP
Princeton Pike Corporate Center
997 Lenox Drive, Bldg. #3
Lawrenceville, NJ 08648

In re Application of ROBINSON et al. Application No.: 10/577,124 PCT No.: PCT/GB04/04775 Int. Filing Date: 10 November 2004 Priority Date: 10 November 2003 Attorney Docket No.: 05794.00003 For: PROTEINS INVOLVED IN QUORUM SENSING	DECISION ON PETITION UNDER 37 CFR 1.182

This decision is issued in response to applicants' "Response to Notification of Missing Requirements under 35 U.S.C. 371 in the United States Designated/Elected Office (DO/EO/US)" dated 01 May 2007 which is being treated as a petition to change an inventor's name under 37 CFR 1.182. Applicants request to change the name of the second inventor from Hannah Rising to Hannah Cook. The $400 petition fee will be charged to counsel's Deposit Account No. 50-1943.

BACKGROUND

On 26 April 2006, applicants filed a transmittal letter for entry into the national stage in the United States which was accompanied by, inter alia: the basic national fee; a copy of the international application; and an application data sheet.

On 06 March 2007, the United Stated Designated/Elected Office mailed a Notification of Missing Requirements under 35 U.S.C. 371 (Form PCT/DO/EO/905) indicating that an oath or declaration in compliance with 37 CFR 1.497(a) and (b) must be filed. The notification set a two-month time limit in which to respond.

On 01 May 2007, applicants filed an executed declaration of inventors and a statement from counsel (John P. Blasko) that "inventor Hannah Sue Rising has married and has adopted her husband's family name, Cook."

DISCUSSION

Section 605.04(b) of the Manual of Patent Examining Procedure states that:

Except for correction of a typographical or transliteration error in the spelling of an inventor's name, a request to have the name changed from the

typewritten version to the signed version or any other corrections in the name of the inventor(s) will not be entertained, unless accompanied by a petition under 35 U.S.C. 1.182 together with an appropriate petition fee.

Applicants request to change the name of the second inventor from Hannah Rising to Hannah Cook. Accordingly, the present submission has been treated as a petition under 37 CFR 1.182 to correct the name of the second inventor. For such a petition to be grantable, MPEP § 605.04(c) states that "the petition must include an appropriate petition fee and an affidavit signed with both names and setting forth the procedure whereby the change of name was effected, or a copy of the court order."

Here, applicants' submission included the authorization to charge Deposit Account No. 50-1943 for required fees. Based on this authorization, Deposit Account No. 50-1943 will be charged the requisite petition fee of $400, satisfying the petition fee requirement. However, applicants have not submitted the required statement from the inventor (or court order) confirming the name change and the procedure whereby the name was changed (for example, by marriage).

Because applicants have failed to submit all the requirements for a grantable petition, correction of the inventor's name on the present record is inappropriate. Accordingly, the declaration filed 01 May 2007, which identifies the second inventor as Hannah Cook, is defective for failure to properly identify the inventors of record herein.

CONCLUSION

For the reasons above, the petition under 37 CFR 1.182 is **DISMISSED** without prejudice.

If reconsideration on the merits of this petition is desired, a proper response must be filed within **TWO (2) MONTH** from the mail date of this decision. Any reconsideration request should include a cover letter entitled "Renewed Petition Under 37 CFR 1.182." No additional petition fee is required. Extensions of time may be obtained under 37 CFR 1.136(a).

Any further correspondence with respect to this matter should be addressed to: Mail Stop PCT, Commissioner for Patents, Office of PCT Legal Administration, P.O. Box 1450, Alexandria, Virginia 22313-1450, with the contents of the letter marked to the attention of the Office of PCT Legal Administration.

Anthony Smith
Attorney-Advisor
Office of PCT Legal Administration
Tel: (571) 272-3298
Fax: (571) 273-0459

UNITED STATES PATENT AND TRADEMARK OFFICE

UNITED STATES DEPARTMENT OF COMMERCE
United States Patent and Trademark Office
Address: COMMISSIONER FOR PATENTS
P.O. Box 1450
Alexandria, Virginia 22313-1450
www.uspto.gov

TOWNSEND AND TOWNSEND AND CREW, LLP
TWO EMBARCADERO CENTER
EIGHTH FLOOR
SAN FRANCISCO, CA 94111-3834

Mail Date: 04/21/2010

Applicant	: Masahiko Hatatani	: DECISION ON REQUEST FOR
Patent Number	: 7599151	: RECALCULATION of PATENT
Issue Date	: 10/06/2009	: TERM ADJUSTMENT IN VIEW
Appliction No	: 10/977,129	: OF WYETH AND NOTICE OF INTENT TO
Filed	: 10/29/2004	: ISSUE CERTIFICATE OF CORRECTION
		:

The Request for Recalculation is **GRANTED** to the extent indicated.

The patent term adjustment has been determined to be **1151** days. The USPTO will *sua sponte* issue a certificate of correction reflecting the amount of PTA days determined by the recalculation.

Prior to the issuance of the certificate of correction, the USPTO will afford patentee an opportunity to be heard and request reconsideration. Accordingly, patentee has **one month or thirty (30) days**, whichever is longer, to file a request for reconsideration of this patent term adjustment calculation. See 35 U.S.C. 154(b)(3)(B)(ii) and 37 CFR 1.322(a)(4). No extensions of time will be granted under 37 CFR 1.136.

Patentee should use document code PET.OP if electronically filing a request for reconsideration of this patent term adjustment calculation. The patentee must also include the information required by 37 CFR 1.705(b)(2) and the fee required by 37 CFR 1.18(e). If patentee does not file a timely request for reconsideration of this patent term adjustment calculation including the information required by 37 CFR 1.705(b)(2) and the fee required by 37 CFR 1.18(e), the USPTO will issue a certificate of correction reflecting the PTA determination noted above.

Patentee should be aware that in order to preserve the right to review in the United States District Court for the District of Columbia of the USPTO patent term adjustment determination, patentee must ensure that he or she also take the steps required under 35 U.S.C. 154(b)(4)(A) in a timely manner. Nothing in the request for recalculation should be construed as providing an alternative time frame for commencing a civil action under 35 U.S.C. 154(b)(4)(A).

Any questions concerning this decision should be directed to the Office of Patent Legal Administration at 571-272-7702.

UNITED STATES PATENT AND TRADEMARK OFFICE

COMMISSIONER FOR PATENTS
UNITED STATES PATENT AND TRADEMARK OFFICE
P.O. BOX 1450
ALEXANDRIA, VA 22313-1450
www.uspto.gov

COPY MAILED

SEP 06 2005

OFFICE OF PETITIONS

MCDERMOTT WILL & EMERY LLP
18191 VON KARMAN AVE.
IRVINE CA 92612-7107

In re Application of :
Michael Marian :
Application No. 10/977,130 : DECISION ON PETITION
Filed: October 29, 2004 :
Attorney Docket No. 072337-0016 :

This is a decision in response to a petition filed March 14, 2005, requesting that the above-identified application be accorded a filing date of October 29, 2004.

A review of the record discloses that USPTO records have been updated to show the correct filing date pursuant to 37 CFR 1.10. A corrected Official Filing Receipt, including the requested filing date and priority information, was mailed on May 13, 2005.

Accordingly, the present petition is dismissed as moot. No petition fee was charged to counsels deposit account, nor is one due.

Telephone inquires related to this decision should be directed to the undersigned at (571) 272-3204.

Sherry D. Brinkley
Petitions Examiner
Office of Petitions
Office of the Deputy Commissioner
for Patent Examination Policy

UNITED STATES PATENT AND TRADEMARK OFFICE

UNITED STATES DEPARTMENT OF COMMERCE
United States Patent and Trademark Office
Address: COMMISSIONER FOR PATENTS
P.O. Box 1450
Alexandria, Virginia 22313-1450
www.uspto.gov

APPL NO.	FILING OR 371 (c) DATE	ART UNIT	FIL FEE REC'D	ATTY.DOCKET NO	DRAWINGS	TOT CLMS	IND CLMS
10/977,131	10/29/2004	2125	1260	072337-0017	2	24	10

CONFIRMATION NO. 7115

UPDATED FILING RECEIPT

OC000000015270275

31824
MCDERMOTT WILL & EMERY LLP
18191 VON KARMAN AVE.
IRVINE, CA 92612-7107

Date Mailed: 02/24/2005

Receipt is acknowledged of this regular Patent Application. It will be considered in its order and you will be notified as to the results of the examination. Be sure to provide the U.S. APPLICATION NUMBER, FILING DATE, NAME OF APPLICANT, and TITLE OF INVENTION when inquiring about this application. Fees transmitted by check or draft are subject to collection. Please verify the accuracy of the data presented on this receipt. **If an error is noted on this Filing Receipt, please write to the Office of Initial Patent Examination's Filing Receipt Corrections, facsimile number 703-746-9195. Please provide a copy of this Filing Receipt with the changes noted thereon. If you received a "Notice to File Missing Parts" for this application, please submit any corrections to this Filing Receipt with your reply to the Notice. When the USPTO processes the reply to the Notice, the USPTO will generate another Filing Receipt incorporating the requested corrections (if appropriate)**

Applicant(s)

Michael Marian, Penngrove, CA;

Assignment For Published Patent Application

HydroPoint Data Systems, Inc., Petaluma, CA

Power of Attorney: The patent practitioners associated with Customer Number **31824**.

Domestic Priority data as claimed by applicant

This appln claims benefit of 60/515,905 10/29/2003
and claims benefit of 60/515,932 10/29/2003
and claims benefit of 60/515,628 10/29/2003

Foreign Applications

If Required, Foreign Filing License Granted: 12/09/2004

The country code and number of your priority application, to be used for filing abroad under the Paris Convention, is US10/977,131

Projected Publication Date: 06/02/2005

Non-Publication Request: No

Early Publication Request: No

**** SMALL ENTITY ****

Title

Method and system for providing offset to computed evapotranspiration values

Preliminary Class

700

LICENSE FOR FOREIGN FILING UNDER
Title 35, United States Code, Section 184
Title 37, Code of Federal Regulations, 5.11 & 5.15

GRANTED

The applicant has been granted a license under 35 U.S.C. 184, if the phrase "IF REQUIRED, FOREIGN FILING LICENSE GRANTED" followed by a date appears on this form. Such licenses are issued in all applications where the conditions for issuance of a license have been met, regardless of whether or not a license may be required as set forth in 37 CFR 5.15. The scope and limitations of this license are set forth in 37 CFR 5.15(a) unless an earlier license has been issued under 37 CFR 5.15(b). The license is subject to revocation upon written notification. The date indicated is the effective date of the license, unless an earlier license of similar scope has been granted under 37 CFR 5.13 or 5.14.

This license is to be retained by the licensee and may be used at any time on or after the effective date thereof unless it is revoked. This license is automatically transferred to any related applications(s) filed under 37 CFR 1.53(d). This license is not retroactive.

The grant of a license does not in any way lessen the responsibility of a licensee for the security of the subject matter as imposed by any Government contract or the provisions of existing laws relating to espionage and the national security or the export of technical data. Licensees should apprise themselves of current regulations especially with respect to certain countries, of other agencies, particularly the Office of Defense Trade Controls, Department of State (with respect to Arms, Munitions and Implements of War (22 CFR 121-128)); the Office of Export Administration, Department of Commerce (15 CFR 370.10 (j)); the Office of Foreign Assets Control, Department of Treasury (31 CFR Parts 500+) and the Department of Energy.

NOT GRANTED

No license under 35 U.S.C. 184 has been granted at this time, if the phrase "IF REQUIRED, FOREIGN FILING LICENSE GRANTED" DOES NOT appear on this form. Applicant may still petition for a license under 37 CFR 5.12, if a license is desired before the expiration of 6 months from the filing date of the application. If 6 months has lapsed from the filing date of this application and the licensee has not received any indication of a secrecy order under 35 U.S.C. 181, the licensee may foreign file the application pursuant to 37 CFR 5.15(b).

UNITED STATES PATENT AND TRADEMARK OFFICE

COMMISSIONER FOR PATENTS
UNITED STATES PATENT AND TRADEMARK OFFICE
P.O. BOX 1450
ALEXANDRIA, VA 22313-1450
www.uspto.gov

COPY MAILED

MAR 15 2005

OFFICE OF PETITIONS

MCDERMOTT WILL & EMERY LLP
18191 VON KARMAN AVE.
IRVINE CA 92612-7107

In re Application of :
Michael Marian :
Application No. 10/977,131 : DECISION GRANTING PETITION
Filed: October 29, 2004 :
Attorney Docket No. 072337-0017 :

This is a decision in response to a petition filed January 3, 2005, requesting that the above-identified application be accorded a filing date of October 29, 2004.

A review of the record discloses that USPTO records have been updated to show the correct filing date pursuant to 37 CFR 1.10. A corrected Official Filing Receipt was mailed on February 24, 2005.

Accordingly, the present petition is dismissed as moot. No petition was charged to counsels deposit account, nor is one due.

Telephone inquires related to this decision should be directed to the undersigned at (571) 272-3204.

Sherry D. Brinkley
Petitions Examiner
Office of Petitions
Office of the Deputy Commissioner
for Patent Examination Policy

IN THE UNITED STATES PATENT AND TRADEMARK OFFICE

In Re the Application of: 10/977143
John Hutchinson
Title: Apparatus and Method for Extracting Water from Air

PETITION GRANTED

William Krynski
Special Program Examiner
TC 1700
2-10-05

Commissioner For Patents
P.O. Box 1450
Alexandria, VA 22313-1450

PETITION TO MAKE SPECIAL-AGE

Dear Sir:

The Applicant herein respectfully requests that the subject application be made special under the provisions of 37 CFR 1.102 (c) -- MPEP 708.02 Petition To Make Special. Applicant is 68 years of age as evidenced by the enclosed copy of his birth certificate.

As is understood, no fee is required for this petition.

Respectfully submitted,

Leo J. Aubel
Reg. No. 18382

Leo J. Aubel
111 Rivershire Lane
Lincolnshire, IL 60069
Phone (847) 634-8923
Fax (847) 634-8985

UNITED STATES PATENT AND TRADEMARK OFFICE

UNITED STATES DEPARTMENT OF COMMERCE
United States Patent and Trademark Office
Address: COMMISSIONER FOR PATENTS
P.O. Box 1450
Alexandria, Virginia 22313-1450
www.uspto.gov

APPL NO.	FILING OR 371 (c) DATE	ART UNIT	FIL FEE REC'D	ATTY.DOCKET NO	DRAWINGS	TOT CLMS	IND CLMS
10/977,144	10/28/2004	2877	395	CO-004	26	18	3

CONFIRMATION NO. 9556

CORRECTED FILING RECEIPT

OC000000014896336

27853
DOUG J. CHUNG
6601 KOLL CENTER PARKWAY
SUITE 245
PLEASANTON, CA 94566-3166

Date Mailed: 01/06/2005

Receipt is acknowledged of this regular Patent Application. It will be considered in its order and you will be notified as to the results of the examination. Be sure to provide the U.S. APPLICATION NUMBER, FILING DATE, NAME OF APPLICANT, and TITLE OF INVENTION when inquiring about this application. Fees transmitted by check or draft are subject to collection. Please verify the accuracy of the data presented on this receipt. **If an error is noted on this Filing Receipt, please write to the Office of Initial Patent Examination's Filing Receipt Corrections, facsimile number 703-746-9195. Please provide a copy of this Filing Receipt with the changes noted thereon. If you received a "Notice to File Missing Parts" for this application, please submit any corrections to this Filing Receipt with your reply to the Notice. When the USPTO processes the reply to the Notice, the USPTO will generate another Filing Receipt incorporating the requested corrections (if appropriate).**

Applicant(s)

James J. Xu, San Jose, CA;
Ken K. Lee, Los Altos, CA;

Power of Attorney:

Dong Chung–41678

Domestic Priority data as claimed by applicant

This appln claims benefit of 60/515,462 10/29/2003

Foreign Applications

If Required, Foreign Filing License Granted: 12/09/2004

The country code and number of your priority application, to be used for filing abroad under the Paris Convention, is US10/977,144

Projected Publication Date: 05/05/2005

Non-Publication Request: No

Early Publication Request: No

** SMALL ENTITY **

Title

Defect review system and method

Preliminary Class

356

LICENSE FOR FOREIGN FILING UNDER
Title 35, United States Code, Section 184
Title 37, Code of Federal Regulations, 5.11 & 5.15

GRANTED

The applicant has been granted a license under 35 U.S.C. 184, if the phrase "IF REQUIRED, FOREIGN FILING LICENSE GRANTED" followed by a date appears on this form. Such licenses are issued in all applications where the conditions for issuance of a license have been met, regardless of whether or not a license may be required as set forth in 37 CFR 5.15. The scope and limitations of this license are set forth in 37 CFR 5.15(a) unless an earlier license has been issued under 37 CFR 5.15(b). The license is subject to revocation upon written notification. The date indicated is the effective date of the license, unless an earlier license of similar scope has been granted under 37 CFR 5.13 or 5.14.

This license is to be retained by the licensee and may be used at any time on or after the effective date thereof unless it is revoked. This license is automatically transferred to any related applications(s) filed under 37 CFR 1.53(d). This license is not retroactive.

The grant of a license does not in any way lessen the responsibility of a licensee for the security of the subject matter as imposed by any Government contract or the provisions of existing laws relating to espionage and the national security or the export of technical data. Licensees should apprise themselves of current regulations especially with respect to certain countries, of other agencies, particularly the Office of Defense Trade Controls, Department of State (with respect to Arms, Munitions and Implements of War (22 CFR 121-128)); the Office of Export Administration, Department of Commerce (15 CFR 370.10 (j)); the Office of Foreign Assets Control, Department of Treasury (31 CFR Parts 500+) and the Department of Energy.

NOT GRANTED

No license under 35 U.S.C. 184 has been granted at this time, if the phrase "IF REQUIRED, FOREIGN FILING LICENSE GRANTED" DOES NOT appear on this form. Applicant may still petition for a license under 37 CFR 5.12, if a license is desired before the expiration of 6 months from the filing date of the application. If 6 months has lapsed from the filing date of this application and the licensee has not received any indication of a secrecy order under 35 U.S.C. 181, the licensee may foreign file the application pursuant to 37 CFR 5.15(b).

UNITED STATES PATENT AND TRADEMARK OFFICE

Commissioner for Patents
United States Patent and Trademark Office
P.O. Box 1450
Alexandria, VA 22313-1450
www.uspto.gov

Dergosits & Noah LLP
Four Embarcadero Center, Suite 1450
San Francisco CA 94111

COPY MAILED

JUL 2 6 2005

OFFICE OF PETITIONS

In re Application of :
Peter Morton :
Application No. 10/977,166 :
Filed: October 29, 2004 :
Attorney Docket No. 479.21 :

ON PETITION

This is a decision on the petition filed June 3, 2005, which is being treated as a request to withdraw the Notice of Omitted Item(s) in a Nonprovisional Application mailed on April 27, 2005.

On October 29, 2004, applicant filed the above-identified application. On April 27, 2005, the Office of Initial Patent Examination mailed a "Notice of Omitted Item(s)," stating that the application had been accorded a filing date of October 29, 2004, and advising applicant that page 13 of the specification appeared to have been omitted.

On June 3, 2005, applicant submitted the present petition, a copy of page 13 of the specification, a copy of the Utility Patent Application Transmittal, and the $400.00 petition fee. Additionally, applicant submitted a copy of his date-stamped return receipt postcard, acknowledging, *inter alia*, "Utility (regular) Appln." on October 29, 2004. Upon a review of the record, page 13 of the specification has not been located in the official file.

Initially, the Office notes that the date-stamped postcard receipt does not itemize with particularity the total number of pages of specification submitted on filing. Rather, applicant's postcard receipt listed "Utility (regular) Appln." as received on October 29, 2004.

As set forth in Section 503 of the Manual of Patent Examining Procedure, in pertinent part:

> A postcard receipt which itemizes and properly identifies the items which are being filed serves as *prima facie* evidence of receipt in the USPTO of all the items listed thereon on the date stamped thereon by the USPTO. The identifying data on the postcard should be so complete as to clearly identify the item for which receipt is requested. For example, the postcard should identify the applicant's name, applicant identifier, application number (if known), filing date, interference number, title of the

> invention, etc. The postcard should also identify the type of paper being filed, e.g., new application, affidavit, amendment, notice of appeal, appeal brief, drawings, fees, motions, supplemental oath or declaration, petition, etc., and the number of pages being submitted. If a new application is being filed, all parts of the application being submitted should be separately listed on the postcard, e.g., the number of pages of specification (including written description, claims and abstract), number of claims, number of sheets of drawings, number of pages of oath/declaration, number of pages of cover sheet (provisional application).
>
> The postcard receipt will not serve as *prima facie* evidence of receipt of any item which is not adequately itemized on the postcard. For example, merely listing on the postcard "a complete application" or "patent application" will not serve as a proper receipt for each of the required components of an application (e.g., specification (including claims), drawings (if necessary), oath or declaration and the application filing fee) or missing portions (e.g., pages, sheets of drawings.) of an application if one of the components or portion of a component is found to be missing by the USPTO. Each separate component should be specifically and properly itemized on the postcard.

Because the postcard receipt does not properly identify and itemize the pages of specification, it does not serve as *prima facie* evidence that applicant filed page 13 of the specification on October 29, 2004.

It is noted that the preliminary amendment submitted on filing identified this application as a divisional application of application No. 10/211,471, filed on August 1, 2002, which claims priority to U.S. provisional patent application Nos. 60/309,836, 60/309,837 and 60/309,854, all filed on August 3, 2001, which are all incorporated herein by reference in their entirety.

Section 201.06(c) of the Manual of Patent Examining Procedure states that:

> . . . an applicant may incorporate by reference the prior application by including, in the application-as-filed, a statement that such specifically enumerated prior application or applications are "hereby incorporated herein by reference." The statement may appear in the specification or in the application transmittal letter. The inclusion of this incorporation by reference of the prior application(s) will permit an applicant to amend the continuing application to include any subject matter in such prior application(s), **without the need for a petition**. (Emphasis supplied).

In view of the incorporation by reference of the prior applications, page 13 of the specification is not new matter if it was part of the disclosure of the prior applications. <u>Applicant may file an amendment to the examiner to include page 13 of the specification without a petition.</u>

The $400.00 petition fee will not be refunded because the filing of the petition was not necessitated by USPTO error.

The Office of Initial Patent Examination is directed to process the application with a filing date of October 29, 2004, using the application papers filed on that date. Page 13 of the specification will not be entered at this time.

Telephone inquiries regarding this decision should be directed to the undersigned at (571) 272-3211.

Christina Tartera Donnell

Christina Tartera Donnell
Senior Petitions Attorney
Office of Petitions

UNITED STATES PATENT AND TRADEMARK OFFICE

Commissioner for Patents
United States Patent and Trademark Office
P.O. Box 1450
Alexandria, VA 22313-1450
www.uspto.gov

JAMES R. BANOWSKY
PATENT GROUP
ONE MICROSOFT WAY
REDMOND WA 98052

MAILED

APR 09 2010

OFFICE OF PETITIONS

In re Application of	:	
Ayyagari et al.	:	
Application No. 10/977,167	:	DECISION ON PETITION
Filed: October 29, 2004	:	
Attorney Docket No. 150701.04	:	

This is a decision on the petition under the unintentional provisions of 37 CFR 1.137(b), filed February 4, 2010, to revive the above-identified application.

The petition is **GRANTED**.

This application became abandoned for failure to timely pay the issue and publication fees on or before December 18, 2009, as required by the Notice of Allowance and Fee(s) Due mailed September 18, 2009. Accordingly, the date of abandonment of this application is December 19, 2009. A Notice of Abandonment was mailed January 5, 2010.

The petition satisfies the requirements of 37 CFR 1.137(b) in that petitioner has supplied (1) the reply in the form of payment of the issue fee of $1,510.00 and publication fee of $300.00; (2) the petition fee of $1,620.00; and (3) a proper statement of unintentional delay.

It is not apparent whether the person signing the instant petition was ever given a power of attorney or authorization of agent to prosecute this patent. In accordance with 37 CFR 1.34(a), the signature appearing on the petition shall constitute a representation to the United States Patent and Trademark Office that he/she is authorized to represent the particular party in whose behalf he/she acts.

Telephone inquiries concerning this decision should be directed to the undersigned at (571) 272-7751.

This application is being referred to the Office of Data Management for processing into a patent.

Joan Olszewski

Joan Olszewski
Petitions Examiner
Office of Petitions

UNITED STATES PATENT AND TRADEMARK OFFICE

Commissioner for Patents
United States Patent and Trademark Office
P.O. Box 1450
Alexandria, VA 22313-1450
www.uspto.gov

HEWLETT PACKARD COMPANY
P O BOX 272400, 3404 E. HARMONY ROAD
INTELLECTUAL PROPERTY ADMINISTRATION
FORT COLLINS CO 80527-2400

COPY MAILED
DEC 05 2008

In re Application of	:	
Komateswar Dhanadevan, et. al.	:	
Application No. 10/977,191	:	DECISION ON PETITION
Filed: October 28, 2004	:	
Attorney Docket No. B-5575 622282-0	:	

This is a decision on the petition, filed June 25, 2008, which is being treated as a petition under 37 CFR 1.181 (no fee) requesting withdrawal of the holding of abandonment in the above-identified application.

The petition is **DISMISSED**.

Any request for reconsideration of this decision should be filed within two (2) months from the mail date of this decision. *Note* 37 CFR 1.181(f). The request for reconsideration should include a cover letter and be entitled as a "Renewed Petition under 37 CFR 1.181 to Withdraw the Holding of Abandonment."

This application became abandoned for failure to timely file a reply within the meaning of 37 CFR 1.113 to the Final Rejection of September 25, 2007. Accordingly, the date of abandonment of this application is December 26, 2007.

Petitioner asserts that the Notice dated September 25, 2007 was not received.

A review of the written record indicates no irregularity in the mailing of the Notice, and, in the absence of any irregularity, there is a strong presumption that the Notice was properly mailed to the practitioner at the address of record. This presumption may be overcome by a showing that the Notice was not in fact received. In this regard, the showing required to establish the failure to receive the Notice must consist of the following:

1. a statement from practitioner stating that the Notice was not received by the practitioner;
2. a statement from the practitioner attesting to the fact that a search of the file jacket and docket records indicates that the Notice was not received; and
3. a copy of the docket record where the nonreceived Notice would have been entered had it been received must be attached to and referenced in the practitioner'statement.

See MPEP § 711.03(c) under subheading "Petition to Withdraw Holding of Abandonment Based on Failure to Receive Office Action," and "Withdrawing the Holding of Abandonment When Office Actions Are Not Received," 1156 Official Gazette 53 (November 16, 1993).

The petition fails to satisfy items 1-3 of the above-stated requirements.

As discussed above, the showing required to establish the failure to receive an Office Action, must be made by the practitioner. In the present situation, however, the statement, i.e., the Declaration and referenced appendices, which accomplished the present petition, was made by Patent Paralegal Michal J. Kraft, who is not registered to practice before the Office.

Additionally, there is no indication that the person signing the petition was ever given a power of attorney or authorization of agent to prosecute the above-identified application. However, in accordance with 37CFR 1.34(a), the signature of Richard P. Berg appearing on the petition shall constitute a representation to the United States Patent and Trademark Office that he is authorized to represent the particular party in whose behalf he acts. If petitioner desires to receive future correspondence regarding this application, the appropriate power of attorney or authorization of agent must be submitted.

Further correspondence with respect to this matter should be addressed as follows:

By Mail: Mail Stop PETITION
Commissioner for Patents
P. O. Box 1450
Alexandria, VA 22313-1450

By hand: U. S. Patent and Trademark Office
Customer Service Window, Mail Stop Petitions
Randolph Building
401 Dulany Street
Alexandria, VA 22314

By facsimile: **(571) 273-8300**
Attn: Office of Petitions

Telephone inquiries concerning this decision should be directed to Denise Williams at (571) 272-8930.

Brian Brown
Petitions Examiner
Office of Petitions

UNITED STATES PATENT AND TRADEMARK OFFICE

Commissioner for Patents
United States Patent and Trademark Office
P.O. Box 1450
Alexandria, VA 22313-1450
www.uspto.gov

HEWLETT PACKARD COMPANY
P O BOX 272400, 3404 E. HARMONY ROAD
INTELLECTUAL PROPERTY ADMINISTRATION
FORT COLLINS CO 80527-2400

MAILED

APR 28 2009

OFFICE OF PETITIONS

In re Application of :
Dhanadevan, et al. :
Application No. 10/977,191 :
Filed: October 28, 2004 :
Attorney Docket No.200314010-1

ON PETITION

This is a decision on the petition to withdraw the holding of abandonment under 37 CFR 1.181(a), filed January 8, 2009.

The petition is **granted**.

This application was held abandoned December 26, 2007, after no reply was received to the final Office action mailed September 25, 2007. The notice set forth a shortened statutory period of reply of three months from its mailing date. No response was received within the allowable period and the application became abandoned on December 26, 2007. A Notice of Abandonment was mailed April 29, 2008. By the instant petition, petitioner maintains that the notice of September 25, 2007, was never received.

When, as in this case petitioner is arguing that an Office communication was not received, petitioner must establish non-receipt of the Office communication in accordance with section 711.03(c) of the *Manual of Patent Examining Procedure* that requires the following:

> To minimize costs and burdens to practitioners and the Office, the Office has modified the showing required to establish nonreceipt of an Office action. The showing required to establish nonreceipt of an Office communication must include a statement from the practitioner **>describing the system used for recording an Office action received at the correspondence address of record with the USPTO. The statement should establish that the docketing system is sufficiently reliable. It is expected that the record would include, but not be limited to, the application number, attorney docket number, the mail date of the Office action and the due date for the response.
>
> Practitioner must state that the Office action was not received at the correspondence address of record, and that a search of the practitioner's record(s), including any file jacket or the equivalent, and the application contents, indicates that the Office action was not received. A copy of the record(s) used by the practitioner where the non-received Office action would have been entered had it been received is required.
>
> A copy of the practitioner's record(s) required to show non-receipt of the Office action should include the master docket for the firm. That is, if a three month period for reply was set in the nonreceived Office action, a copy of the master docket report showing all replies docketed for a date three months from the mail date of

> the nonreceived Office action must be submitted as documentary proof of nonreceipt of the Office action. If no such master docket exists, the practitioner should so state and provide other evidence such as, but not limited to, the following: the application file jacket; incoming mail log; calendar; reminder system; or the individual docket record for the application in question.<

Petitioner has met the burden of proof as established by Section 711.03(c)(II) of the MPEP. The holding of abandonment will be withdrawn, accordingly.

The application file is being forwarded to Technology Center 2100, GAU 2161 for further processing that will include remailing the final Office action and resetting of the period for reply.

Questions concerning this decision should be directed to the undersigned at (571) 272-3222.

Kenya A. McLaughlin
Petitions Attorney
Office of Petitions

UNITED STATES PATENT AND TRADEMARK OFFICE

Commissioner for Patents
United States Patent and Trademark Office
P.O. Box 1450
Alexandria, VA 22313-1450
www.uspto.gov

JUN 16 2005

Gregory J. Nelson
NELSON & ROEDIGER
Suite 212
3333 E. Camelback Road
Phoenix, AZ 85018

In re application of	:	**DECISION ON PETITION**
Charles T. Osborn	:	**TO MAKE SPECIAL**
Application No. 10/977,217	:	**(APPLICANT'S AGE)**
Filed: October 28, 2004	:	
For: RETRACTABLE CURTAIN FOR TOWING VEHICLES		

This is a decision on the petition submitted on May 02, 2005 under 37 CFR 1.102 (c) to make the above-identified application special under the accelerated examination procedure set forth in MPEP 708.02, Section IV: Applicant's Age.

The petition is **GRANTED**.

An application may be accorded special status upon the filing of a petition providing evidence showing that the applicant is at least 65 years old. Such a showing may be provided by evidence such as a birth certificate or a statement from the applicant.

The evidence submitted with the petition is a signed declaration indicating Mr. Osborn is at least 65 years of age.

The examiner is directed (1) to make an interference search for possible interfering applications, (2) to promptly examine this application out of turn, and (3) if any interfering application is discovered, to examine such application simultaneously and state in the first official letter of such application that it is being taken out of turn because of a possible interference.

Petitioner is advised that this application will continue to be special, throughout its entire prosecution and pendency, including interference or appeal, if any, only if petitioner makes a prompt ***bona fide*** effort, in response to each Office action, to place the application in condition for allowance, even if it is necessary to conduct an interview with the examiner to accomplish this purpose.

SUMMARY: Petition to Make Special **GRANTED**.

Kenneth J. Dorner
Special Programs Examiner
Technology Center 3600
(571) 272-6587

KJD/slb: 05/25/05

UNITED STATES PATENT AND TRADEMARK OFFICE

Commissioner for Patents
United States Patent and Trademark Office
P.O. Box 1450
Alexandria, VA 22313-1450
www.uspto.gov

ORRICK, HERRINGTON & SUTCLIFFE, LLP
IP PROSECUTION DEPARTMENT
4 PARK PLAZA
SUITE 1600
IRVINE CA 92614-2558

COPY MAILED

JUN 0 4 2007

OFFICE OF PETITIONS

In re Application of	:	
Stuart J. Cumming	:	
Application No. 10/977,233	:	DECISION ON PETITION
Filed: October 28, 2004	:	TO MAKE SPECIAL UNDER
Attorney Docket No. 13533.4048	:	37 CFR 1.102(c)(1)
	:	

This is a decision on the petition under 37 CFR 1.102(c)(1), filed April 25, 2005, to make the above-identified application special based on applicant's age as set forth in M.P.E.P. § 708.02, Section IV.

The petition is **GRANTED**.

A grantable petition to make an application special under 37 CFR 1.102(c)(1) and MPEP § 708.02, Section IV: Applicant's Age must be accompanied by evidence showing that at least one of the applicants is 65 years of age, or more, such as a birth certificate or a statement by applicant. No fee is required

The instant petition includes a statement from the applicant declaring that he is 65 years of age or older. Accordingly, the above-identified application has been accorded "special" status.

Telephone inquiries concerning this decision should be directed to Terri Williams at 571-272-2991.

All other inquiries concerning either the examination or status of the application should be directed to the Technology Center.

The application is being forwarded to the Technology Center Art Unit 3738 for action on the merits commensurate with this decision.

Terri Williams

Terri Williams
Petitions Examiner
Office of Petitions

UNITED STATES PATENT AND TRADEMARK OFFICE

Commissioner for Patents
United States Patent and Trademark Office
P.O. Box 1450
Alexandria, VA 22313-1450
www.uspto.gov

Fitzpatrick Cella (Marvell)
30 Rockefeller Plaza
New York, NY 10112-3800

COPY MAILED

NOV 18 2008

In re Application of	:	
Tal Anker, et al.	:	
Application No. 10/977,245	:	DECISION ON PETITION
Filed: October 29, 2004	:	TO WITHDRAW
Attorney Docket No. MP0443	:	FROM RECORD
	:	

This is a decision on the Request to Withdraw as attorney or agent of record under 37 C.F.R. § 1.36(b), filed October 31, 2008.

The request is **NOT APPROVED** because it is moot.

A review of the file record indicates that the power of attorney to Fitzpatrick Cella (Marvell) has been revoked by the assignee of the patent application on November 13, 2008. Accordingly, the request to withdraw under 37 C.F.R. § 1.36(b) is moot.

All future communications from the Office will continue to be directed to the below-listed address until otherwise notified by applicant.

Telephone inquires concerning this decision should be directed to Terri Williams at 571-272-2991.

Terri Williams

Terri Williams
Petitions Examiner
Office of Petitions

cc: **Schwabe, Williamson & Wyatt, P.C.**
Pacwest Center, Suite 1900
1211 S.W. Fifth Avenue
Portland, OR 97204

UNITED STATES PATENT AND TRADEMARK OFFICE

UNITED STATES DEPARTMENT OF COMMERCE
United States Patent and Trademark Office
Address: COMMISSIONER FOR PATENTS
P.O. Box 1450
Alexandria, Virginia 22313-1450
www.uspto.gov

SCHWABE, WILLIAMSON & WYATT, P.C.
PACWEST CENTER, SUITE 1900
1211 S.W. FIFTH AVENUE
PORTLAND, OR 97204

Mail Date: 04/21/2010

Applicant	: Tal Anker	: DECISION ON REQUEST FOR
Patent Number	: 7646717	: RECALCULATION of PATENT
Issue Date	: 01/12/2010	: TERM ADJUSTMENT IN VIEW
Appliction No	: 10/977,245	: OF WYETH AND NOTICE OF INTENT TO
Filed	: 10/29/2004	: ISSUE CERTIFICATE OF CORRECTION
		:

The Request for Recalculation is **GRANTED** to the extent indicated.

The patent term adjustment has been determined to be **1355** days. The USPTO will *sua sponte* issue a certificate of correction reflecting the amount of PTA days determined by the recalculation.

Prior to the issuance of the certificate of correction, the USPTO will afford patentee an opportunity to be heard and request reconsideration. Accordingly, patentee has **one month or thirty (30) days**, whichever is longer, to file a request for reconsideration of this patent term adjustment calculation. See 35 U.S.C. 154(b)(3)(B)(ii) and 37 CFR 1.322(a)(4). No extensions of time will be granted under 37 CFR 1.136.

Patentee should use document code PET.OP if electronically filing a request for reconsideration of this patent term adjustment calculation. The patentee must also include the information required by 37 CFR 1.705(b)(2) and the fee required by 37 CFR 1.18(e). If patentee does not file a timely request for reconsideration of this patent term adjustment calculation including the information required by 37 CFR 1.705(b)(2) and the fee required by 37 CFR 1.18(e), the USPTO will issue a certificate of correction reflecting the PTA determination noted above.

Patentee should be aware that in order to preserve the right to review in the United States District Court for the District of Columbia of the USPTO patent term adjustment determination, patentee must ensure that he or she also take the steps required under 35 U.S.C. 154(b)(4)(A) in a timely manner. Nothing in the request for recalculation should be construed as providing an alternative time frame for commencing a civil action under 35 U.S.C. 154(b)(4)(A).

Any questions concerning this decision should be directed to the Office of Patent Legal Administration at 571-272-7702.

UNITED STATES PATENT AND TRADEMARK OFFICE

COMMISSIONER FOR PATENTS
UNITED STATES PATENT AND TRADEMARK OFFICE
P.O. BOX 1450
ALEXANDRIA, VA 22313-1450
www.uspto.gov

FISH & RICHARDSON PC
225 FRANKLIN ST
BOSTON MA 02110

COPY MAILED

MAY 2 6 2005

OFFICE OF PETITIONS

In re Application of DiMatteo et al. Application No. 10/977,255 Filed: October 29, 2004 For: MEDICAL DEVICE SYSTEMS AND METHODS Attorney Docket No. 10527-516001 / 03-204	Decision on Petition

The above-identified application has been forwarded to this office for consideration of the paper styled "Request to Rescind Request For Early Publication Request" received on March 22, 2005, which is being treated as a petition under 37 CFR 1.182 for Questions Not Specifically Provided For.

The petition is dismissed.

Applicant requested early publication on October 29, 2004. The application was scheduled for early publication on March 31, 2005. The application was published on March 31, 2005, as Patent Application Publication 2005/0070888 A1. The petition was received too late in the publication cycle to withdraw the early publication request.

The petition fee of $400.00 under 37 CFR 1.17(f) has been charged to petitioners' Deposit Account No. 06-1050. The publication fee will not be refunded, as the fee was properly paid by applicant. See 37 CFR 1.26(a). Applicant requested early publication and he was properly charged the publication fee.

Telephone inquiries regarding this communication should be directed to Mark O. Polutta at (571) 272-7709.

Mark O. Polutta for KF

Karin Ferriter
Senior Legal Advisor
Office of Patent Legal Administration
Office of the Deputy Commissioner
for Patent Examination Policy

Attorney's Docket No.: 10527-516001 / 03-204

IN THE UNITED STATES PATENT AND TRADEMARK OFFICE

Applicant : DiMatteo et al.
Serial No. : 10/977,255
Filed : October 29, 2004
Title : MEDICAL DEVICE SYSTEMS AND METHODS

Art Unit : 3739
Examiner : Unknown

Commissioner for Patents
P.O. Box 1450
Alexandria, VA 22313-1450

REQUEST TO RESCIND REQUEST FOR EARLY PUBLICATION

Applicant hereby request that the request for early publication be rescinded.

Please apply any charges or credits to Deposit Account No. 06-1050.

Respectfully submitted,

Date: 3/22/05

Sean P. Daley
Reg. No. 40,978

Fish & Richardson P.C.
225 Franklin Street
Boston, MA 02110-2804
Telephone: (617) 542-5070
Facsimile: (617) 542-8906

21049740.doc

RECEIVED
USPTO-PG PUBS
MAR 2 2 2005

03/23/2005 AKELLEY 00000003 061050 10977255
01 FC:1462 400.00 DA

CERTIFICATE OF TRANSMISSION BY FACSIMILE

I hereby certify that this correspondence is being transmitted by facsimile to the Patent and Trademark Office on the date indicated below.

3-22-05
Date of Transmission

Patricia Smith
Signature

Patricia Smith
Typed or Printed Name of Person Signing Certificate

UNITED STATES PATENT AND TRADEMARK OFFICE

Commissioner for Patents
United States Patent and Trademark Office
P.O. Box 1450
Alexandria, VA 22313-1450
www.uspto.gov

BLAKELY SOKOLOFF TAYLOR & ZAFMAN LLP
1279 OAKMEAD PARKWAY
SUNNYVALE CA 94085-4040

COPY MAILED

JUN 2 7 2008

OFFICE OF PETITIONS

In re Application of :
Brian S. **DOYLE et al** :
Application No. 10/977,261 : ON PETITION
Filed: October 29, 2004 :
Attorney Docket No. 42P20371 :

This is a decision on the petition under 37 CFR 1.137(b), filed March 11, 2008, to revive the above-identified application.

The petition is **DISMISSED**.

Any request for reconsideration of this decision must be submitted within TWO (2) MONTHS from the mail date of this decision. Extensions of time under 37 CFR 1.136(a) are permitted. The reconsideration request should include a cover letter entitled "Renewed Petition under 37 CFR 1.137(b)." This is **not** a final agency action within the meaning of 5 U.S.C. § 704.

The above-identified application became abandoned for failure to reply within the meaning of 37 CFR 1.113 in a timely manner to the final Office action mailed November 1, 2006, which set a shortened statutory period for reply of three (3) months. No extension of time under the provisions of 37 CFR 1.136(a) was obtained. Accordingly, the above-identified application became abandoned on February 2, 2007.

A grantable petition under 37 CFR 1.137(b) must be accompanied by: (1) the required reply, unless previously filed; (2) the petition fee as set forth in 37 CFR 1.17(m); (3) a statement that the entire delay in filing the required reply from the due date for the reply until the filing of a grantable petition pursuant to 37 CFR 1.137(b) was unintentional; and (4) any terminal disclaimer (and fee as set forth in 37 CFR 1.20(d)) required by 37 CFR 1.137(d). Where there is a question as to whether either the abandonment or the delay in filing a petition under 37 CFR 1.137 was unintentional, the Director may require additional information. See MPEP 711.03(c)(II)(C) and (D). The instant petition lacks item(s) (1).

The application became abandoned for failure to timely file a reply within the meaning of 37 CFR 1.113 to the final Office action of November 1, 2006. The proposed reply required for consideration of a petition to revive must be a Notice of Appeal (and appeal fee required by 37 CFR 41.20(b)(2)), an amendment that *prima facie* places the application in condition for allowance, a Request for Continued Examination (RCE) and submission (37 CFR 1.114), or the filing of a continuing application under 37 CFR 1.53(b). See MPEP 711.03(c)(III)(A)(2). Since the amendment submitted does not *prima facie* place the application in condition for allowance, the reply required must be a Notice of Appeal (and appeal fee), RCE, or the filing of a continuing application under 37 CFR 1.53(b). See the enclosed PTOL-303.

Further correspondence with respect to this matter should be addressed as follows:

By Mail: Mail Stop PETITION
Commissioner for Patents
P. O. Box 1450
Alexandria, VA 22313-1450

By hand: U. S. Patent and Trademark Office
Customer Service Window, Mail Stop Petitions
Randolph Building
401 Dulany Street
Alexandria, VA 22314

The centralized facsimile number is **(571) 273-8300.**

Telephone inquiries concerning this decision should be directed to Lori Baker Amerson at (571) 272-6052 or in her absence the undersigned at (571) 272-7099.

David Bucci
Petitions Examiner
Office of Petitions

Encl.: PTOL-303
Form 1449

Advisory Action Before the Filing of an Appeal Brief	Application No. 10/977,261	Applicant(s) DOYLE ET AL.	
	Examiner William F. Kraig	Art Unit 2892	

--The MAILING DATE of this communication appears on the cover sheet with the correspondence address --

THE REPLY FILED 11 March 2008 FAILS TO PLACE THIS APPLICATION IN CONDITION FOR ALLOWANCE.

1. ☒ The reply was filed after a final rejection, but prior to or on the same day as filing a Notice of Appeal. To avoid abandonment of this application, applicant must timely file one of the following replies: (1) an amendment, affidavit, or other evidence, which places the application in condition for allowance; (2) a Notice of Appeal (with appeal fee) in compliance with 37 CFR 41.31; or (3) a Request for Continued Examination (RCE) in compliance with 37 CFR 1.114. The reply must be filed within one of the following time periods:
   a) ☒ The period for reply expires 3 months from the mailing date of the final rejection.
   b) ☐ The period for reply expires on: (1) the mailing date of this Advisory Action, or (2) the date set forth in the final rejection, whichever is later. In no event, however, will the statutory period for reply expire later than SIX MONTHS from the mailing date of the final rejection.

   Examiner Note: If box 1 is checked, check either box (a) or (b). ONLY CHECK BOX (b) WHEN THE FIRST REPLY WAS FILED WITHIN TWO MONTHS OF THE FINAL REJECTION. See MPEP 706.07(f).

Extensions of time may be obtained under 37 CFR 1.136(a). The date on which the petition under 37 CFR 1.136(a) and the appropriate extension fee have been filed is the date for purposes of determining the period of extension and the corresponding amount of the fee. The appropriate extension fee under 37 CFR 1.17(a) is calculated from: (1) the expiration date of the shortened statutory period for reply originally set in the final Office action; or (2) as set forth in (b) above, if checked. Any reply received by the Office later than three months after the mailing date of the final rejection, even if timely filed, may reduce any earned patent term adjustment. See 37 CFR 1.704(b).

NOTICE OF APPEAL

2. ☐ The Notice of Appeal was filed on _____. A brief in compliance with 37 CFR 41.37 must be filed within two months of the date of filing the Notice of Appeal (37 CFR 41.37(a)), or any extension thereof (37 CFR 41.37(e)), to avoid dismissal of the appeal. Since a Notice of Appeal has been filed, any reply must be filed within the time period set forth in 37 CFR 41.37(a).

AMENDMENTS

3. ☒ The proposed amendment(s) filed after a final rejection, but prior to the date of filing a brief, will not be entered because
   (a) ☒ They raise new issues that would require further consideration and/or search (see NOTE below);
   (b) ☐ They raise the issue of new matter (see NOTE below);
   (c) ☒ They are not deemed to place the application in better form for appeal by materially reducing or simplifying the issues for appeal; and/or
   (d) ☐ They present additional claims without canceling a corresponding number of finally rejected claims.

   NOTE: *See Continuation Sheet*. (See 37 CFR 1.116 and 41.33(a)).
4. ☐ The amendments are not in compliance with 37 CFR 1.121. See attached Notice of Non-Compliant Amendment (PTOL-324).
5. ☐ Applicant's reply has overcome the following rejection(s): _____.
6. ☐ Newly proposed or amended claim(s) _____ would be allowable if submitted in a separate, timely filed amendment canceling the non-allowable claim(s).
7. ☒ For purposes of appeal, the proposed amendment(s): a) ☒ will not be entered, or b) ☐ will be entered and an explanation of how the new or amended claims would be rejected is provided below or appended.
   The status of the claim(s) is (or will be) as follows:
   Claim(s) allowed: _____.
   Claim(s) objected to: _____.
   Claim(s) rejected: *9-21*.
   Claim(s) withdrawn from consideration: *1-8*.

AFFIDAVIT OR OTHER EVIDENCE

8. ☐ The affidavit or other evidence filed after a final action, but before or on the date of filing a Notice of Appeal will not be entered because applicant failed to provide a showing of good and sufficient reasons why the affidavit or other evidence is necessary and was not earlier presented. See 37 CFR 1.116(e).
9. ☐ The affidavit or other evidence filed after the date of filing a Notice of Appeal, but prior to the date of filing a brief, will not be entered because the affidavit or other evidence failed to overcome all rejections under appeal and/or appellant fails to provide a showing a good and sufficient reasons why it is necessary and was not earlier presented. See 37 CFR 41.33(d)(1).
10. ☐ The affidavit or other evidence is entered. An explanation of the status of the claims after entry is below or attached.

REQUEST FOR RECONSIDERATION/OTHER

11. ☐ The request for reconsideration has been considered but does NOT place the application in condition for allowance because: _____.
12. ☒ Note the attached Information *Disclosure Statement*(s). (PTO/SB/08) Paper No(s). 10/26/2006
13. ☐ Other: _____.

Continuation of 3. NOTE: The addition of the limitation "having an approximately equal thickness" to claims 9 and 16, would require further consideration and/or search, and thus the proposed amendments will not be entered.

OCT 2 6 2006
PATENT & TRADEMARK OFFICE

Substitute for form 1449A/PTO

INFORMATION DISCLOSURE STATEMENT BY APPLICANT

(use as many sheets as necessary)

Sheet	1	of	2

Complete if Known	
Application Number	10/977,261
Filing Date	October 29, 2004
First Named Inventor	Brian S. Doyle
Art Unit	~~2815~~ 2892
Examiner Name	William F. Kraig
Attorney Docket Number	42P20371

U.S. PATENT DOCUMENTS

Examiner Initials*	Cite No.[1]	Document Number Number - Kind Code[2] *(if known)*	Publication Date MM-DD-YYYY	Name of Patentee or Applicant of Cited Document	Pages, Columns, Lines, Where Relevant Passages or Relevant Figures Appear
/WFK/		US-6,037,605 A	03-14-2000	YOSHIMURA et al.	
/WFK/		US-5,834,793 A	11-10-1998	SHIBATA et al.	
		US-			
		US-			
		US-			
		US-			
		US-			
		US-			
		US-			
		US-			
		US-			
		US-			
		US-			
		US-			
		US-			
		US-			
		US-			
		US-			
		US-			
		US-			

FOREIGN PATENT DOCUMENTS

Examiner Initials*	Cite No.[1]	Foreign Patent Document Country Code[3] - Number[4] - Kind Code[5] *(if known)*	Publication Date MM-DD-YYYY	Name of Patentee or Applicant of Cited Document	Pages, Columns, Lines, Where Relevant Passages or Relevant Figures Appear	T[6]
/WFK/		WO 97/48135 - A	12-18-1997	Commissariat A L'Energie		
/WFK/		WO 02/43109 - A2	05-30-2002	Infineon technologies AG		
/WFK/		EP 0116789 - A	08-29-1984	Fujitsu Limited		

Examiner Signature	/William Kraig/	Date Considered	06/09/2008

*Examiner: Initial if reference considered, whether or not citation is in conformance with MPEP 609. Draw line through citation if not in conformance and not considered. Include copy of this form with next communication.

[1]Applicant's unique citation designation number (optional). [2]See Kinds Codes of USPTO Patent Documents at www.uspto.gov or MPEP 901.04. [3]Enter Office that issued the document, by the two-letter code (WIPO Standard ST.3). [4]For Japanese patent documents, the indication of the year of reign of the Emperor must precede the serial number of the patent document. [5]Kind of document by the appropriate symbols as indicated on the document under WIPO Standard ST. 16 if possible. [6]Applicant is to place a check mark here if English language Translation is attached.

Based on PTO/SB/08A (08-03) as modified by Blakely, Sokoloff, Taylor & Zafman (wlr) 08/11/2003.

Send To: Commissioner for Patents, P.O. Box 1450, Alexandria, VA 22313-1450

ALL REFERENCES CONSIDERED EXCEPT WHERE LINED THROUGH. /WF

OIPE IAP87
OCT 2 6 2006
PATENT & TRADEMARK OFFICE

Substitute for form 1449A/PTO

INFORMATION DISCLOSURE STATEMENT BY APPLICANT

Sheet	2	of	2

Complete if Known	
Application Number	10/977,261
Filing Date	October 29, 2004
First Named Inventor	Brian S. Doyle
Art Unit	~~2815~~ 2892
Examiner Name	William F. Kraig
Attorney Docket Number	42P20371

NON PATENT LITERATURE DOCUMENTS

Examiner Initials*	Cite No.[1]	Include name of the author (in CAPITAL LETTERS), title of the article (when appropriate), title of the item (book, magazine, journal, serial, symposium, catalog, etc.), date, page(s), volume-issue number(s), publisher, city and/or country where published.	T[2]
/WFK/		SAITO MASUM et al., "Transport Spectroscopy of the Ultrasmall Silicon Quantum Dot in a Single-electron Transistor", App. Phys. Letters, AIP, Amer. Inst. of Phys., Vol. 79, No. 13, September 2001, pages 2025-2027.	

Examiner Signature	/William Kraig/	Date Considered	06/09/2008

*Examiner: Initial if reference considered, whether or not citation is in conformance with MPEP 609. Draw line through citation if not in conformance and not considered. Include copy of this form with next communication.

[1]Applicant's unique citation designation number. [2]Applicant is to place a check mark here if English language Translation is attached.

Based on PTO/SB/08B (08-03) as modified by Blakely, Sokoloff, Taylor & Zafman (wlr) 08/11/2003.
Send To: Commissioner for Patents, P.O. Box 1450, Alexandria, VA 22313-1450

ALL REFERENCES CONSIDERED EXCEPT WHERE LINED THROUGH. /WF

UNITED STATES PATENT AND TRADEMARK OFFICE

Commissioner for Patents
United States Patent and Trademark Office
P.O. Box 1450
Alexandria, VA 22313-1450
www.uspto.gov

APR 22 2005

INSKEEP INTELLECTUAL PROPERTY GROUP, INC
1225 W. 190TH STREET
SUITE 205
GARDENA CA 90248

In re Application of	:	
TenBrink, et al.	:	
Serial No.: 10/977,265	:	DECISION ON PETITION
Filed: October 29, 2004	:	
For: Field Circulatory Construction Device	:	

This is in response to applicants' petition filed April 11, 2005, to make the above-identified application special under the provisions of 37 CFR 1.102(d), based on infringement.

Applicant has satisfied the provisions set forth in M.P.E.P. 708.02, II. Therefore the petition is **GRANTED**.

The application will be forwarded to the examiner for action on the merits commensurate with this decision.

Should there be any questions with regard to this letter please contact Richard Bertsch by letter addressed to the Director, Technology Center 3700, or by telephone at (571)272-4050 or by facsimile transmission at (703)872-9306.

Richard A. Bertsch, Director
Technology Center 3700

UNITED STATES PATENT AND TRADEMARK OFFICE

OFFICE

COPY MAILED

JUN 19 2006

Director's Office
Office of Patent Publication

CHRISTIE, PARKER & HALE, LLP
PO BOX 7068
PASADENA, CA 91109-7068

In re Application of	:	
CARRUTH, THOMAS F.	:	
Application No. 10/977,282	:	**DECISION ON PETITION**
Filed: October 28, 2004	:	
Attorney Docket No. 5337/CAB/W225	:	

This is a decision on the Petition To Withdraw Holding Of Abandonment, received in the United States Patent & Trademark (USPTO) on April 6, 2006.

The petition is **DISMISSED**.

The above-identified application was held abandoned for applicant's failure to timely pay the issue fee, as required in the Notice of Allowance and Fee(s) Due, mailed November 16, 2005. The Notice of Abandonment, mailed on March 20, 2006 indicated that the submitted fee of $300 is insufficient. A balance of $550 is due.

The Office acknowledges receipt of Part B – Fee(s) Transmittal via facsimile transmission on December 15, 2005, authorizing that the Issue Fee, Publication Fee, and Advance Order Copies be charged to Deposit Account No. 03-1728. On December 15, 2005, when an attempt was made by the Office of Finance to charge the fees, there were insufficient funds in the Deposit Account to charge all the required fees.

37 CFR 1.25 (a) and (b), which states in part:

> 1.25(a) ...An amount sufficient to cover all fee, services, copies, etc., requested must always be on deposit. Charges to accounts with insufficient funds will not be accepted."
>
> 1.25 (b) ...An authorization to charge a fee to a deposit account will not be considered payment of the fee on the date the authorization to charge the fee is effective as to the particular fee to be charged unless sufficient funds are present in the account to cover the fee.

In light of the non-compliance with 37 CFR 1.25, the holding of abandonment cannot be withdrawn.

Applicant may seek relief by filing a petition for Revival of Abandoned Application under CFR § 1.137 (a) or (b). (Forms are available at USPTO website http://www.uspto.gov)

- Under 37 CFR 1.137(a), a petition for the revival of an ***unavoidable*** abandoned application
- Under 37 CFR 1.137(b), a petition for the revival of an ***unintentionally*** abandoned application

Further inquires with respect to filing a petition under 37 CFR § 1.137 may be directed to the Office of Petitions at 571-272-3282 or addressed as follows:

By mail: Mail Stop Petitions
Commissioner for Patents
Office of Petitions
P O Box 1450
Alexandria, VA 22313-1450

Telephone inquires concerning this decision matter may be directed to the undersigned at 703 308-9250 Ext. 137.

Thomas E Hawkins

Thomas E. Hawkins
Paralegal Specialist
Office of the Director
Office of Patent Publications

UNITED STATES PATENT AND TRADEMARK OFFICE

COMMISSIONER FOR PATENTS
UNITED STATES PATENT AND TRADEMARK OFFICE
P.O. BOX 1450
ALEXANDRIA, VA 22313-1450
www.uspto.gov

COPY MAILED

AUG 14 2006

OFFICE OF PETITIONS

CHRISTIE, PARKER & HALE, LLP
PO BOX 7068
PASADENA, CA 91109-7068

In re Application of	:
Carruth	: DECISION ON PETITION
Application No. 10/977,282	:
Filed: October 28, 2004	:
Docket No.: 53737/CAB/W225	:

This is a decision on the petition under 37 CFR 1.137(b), filed June 23, 2006, to revive the above-identified application.

The petition is **GRANTED**.

This application became abandoned February 17, 2006 for failure to timely submit the issue fee in response to the Notice of Allowance and Issue Fee(s) Due ("Notice") mailed November 16, 2005. The Notice set a three month statutory period for reply. Notice of Abandonment was mailed March 20, 2006.

A grantable petition pursuant to 37 C.F.R. § 1.137(b) must be accompanied by: (1) the required reply to the outstanding Office action or notice, unless previously filed; (2) the petition fee as set forth in 37 C.F.R. § 1.17(m); (3) a statement that the entire delay in filing the required reply from the due date for the reply until the filing of a grantable petition pursuant to 37 C.F.R. § 1.137(b) was unintentional; and (4)any terminal disclaimer (and fee set forth in 37 C.F.R. § 1.20(d)) required pursuant to 37 C.F.R. § 1.137(c).

The instant petition has been reviewed and found in compliance with the provisions of 37 CFR 1.137(b). Accordingly, the failure to timely submit a proper reply to the Notice is accepted as having been unintentionally delayed.

This application will be forwarded to the Publications Division for further processing.

Telephone inquiries concerning this matter may be directed to the undersigned at (571) 272-3205.

Alesia M. Brown
Petitions Attorney
Office of Petitions

UNITED STATES PATENT AND TRADEMARK OFFICE

Commissioner for Patents
United States Patent and Trademark Office
P.O. Box 1450
Alexandria, VA 22313-1450
www.uspto.gov

Canon U.S.A. Inc., Intellectual Property Division
15975 Alton Parkway
Irvine, CA 92618-3731

MAILED

NOV 29 2006

DIRECTOR'S OFFICE
TECHNOLOGY CENTER 2600

In re Application of	:	
Junichi Miyata	:	DECISION ON REQUEST TO
Application No. 10/977287	:	PARTICIPATE IN PATENT
Filed: October 28, 2004	:	PROSECUTION HIGHWAY
Attorney Docket No. 10002788US01	:	PILOT PROGRAM AND PETITION
	:	TO MAKE SPECIAL UNDER
	:	37 CFR 1.102(d)

This is a decision on the request to participate in the Patent Prosecution Highway (PPH) pilot program and the petition under 37 CFR 1.102(d), filed November 13, 2006, to make the above-identified application special.

The request and petition are **DISMISSED**.

A grantable request to participate in the PPH pilot program and petition to make special require:

(1) The U.S. application must validly claim priority under 35 U.S.C. 119(a) to one or more applications filed in the JPO;
(2) Applicant must submit a copy of the allowable/patentable claim(s) from the JPO application(s) along with an English translation thereof and a statement that the English translation is accurate;
(3) All the claims in the U.S. application must sufficiently correspond or be amended to sufficiently correspond to the allowable/patentable claim(s) in the JPO application(s);
(4) Examination of the U.S. application has not begun;
(5) Applicant must submit a copy of all the office actions from each of the JPO application(s) containing the allowable/patentable claim(s) along with an English translation thereof and a statement that the English translation is accurate;
(6) Applicant must submit an IDS listing the documents cited by the JPO examiner in the JPO office action along with copies of documents except U.S. patents or U.S. patent application publications; and
(7) The required petition fee under 37 CFR 1.17(h).

The request to participate in the PPH pilot program and petition fail to include:

- Item 6 above. Specifically, the PPH request letter, filed 11/13/06, addressed to Ms. Greenlief indicated that there are no references or publications cited in the application. However, a search

from the Dossier Access System shows that the Decision to Grant a Patent paper contains 3 JP references. Thus, the requirement of item 6 above is not met.

Applicant is given a time period of **ONE MONTH or THIRTY DAYS**, whichever is longer, to correct the deficiencies. **NO EXTENSION OF TIME UNDER 37 CFR 1.136 IS PERMITTED.** If the deficiencies are not corrected with the time period given, the application will await action in its regular turn.

Response must be faxed to John Peng at 571-273-7272 (RightFax) or 571-273-0308.

Telephone inquiries concerning this decision should be directed to John Peng at 571-272-7272.

All other inquiries concerning the examination or status of the application should be directed to Patent Application Information Retrieval (PAIR) system.

John Peng
TC 2600
Quality Assurance Specialist

UNITED STATES PATENT AND TRADEMARK OFFICE

Commissioner for Patents
United States Patent and Trademark Office
P.O. Box 1450
Alexandria, VA 22313-1450
www.uspto.gov

MAILED

DEC 2 6 2006

DIRECTOR'S OFFICE
TECHNOLOGY CENTER 2600

Canon U.S.A. Inc., Intellectual Property Division
15975 Alton Parkway
Irvine, CA 92618-3731

In re Application of	:	
Junichi Miyata	:	DECISION ON REQUEST TO
Application No. 10/977287	:	PARTICIPATE IN PATENT
Filed: October 28, 2004	:	PROSECUTION HIGHWAY
Attorney Docket No. 10002788US01	:	PILOT PROGRAM AND PETITION
	:	TO MAKE SPECIAL UNDER
	:	37 CFR 1.102(d)

This is a decision on the request to participate in the Patent Prosecution Highway (PPH) pilot program and the petition under 37 CFR 1.102(d), filed December 19, 2006, to make the above-identified application special.

The request and petition are **GRANTED**.

A grantable request to participate in the PPH pilot program and petition to make special require:

(1) The U.S. application must validly claim priority under 35 U.S.C. 119(a) to one or more applications filed in the JPO;
(2) Applicant must submit a copy of the allowable/patentable claim(s) from the JPO application(s) along with an English translation thereof and a statement that the English translation is accurate;
(3) All the claims in the U.S. application must sufficiently correspond or be amended to sufficiently correspond to the allowable/patentable claim(s) in the JPO application(s);
(4) Examination of the U.S. application has not begun;
(5) Applicant must submit a copy of all the office actions from each of the JPO application(s) containing the allowable/patentable claim(s) along with an English translation thereof and a statement that the English translation is accurate;
(6) Applicant must submit an IDS listing the documents cited by the JPO examiner in the JPO office action along with copies of documents except U.S. patents or U.S. patent application publications; and
(7) The required petition fee under 37 CFR 1.17(h).

The request to participate in the PPH pilot program and petition comply with the above requirements. Accordingly, the above-identified application has been accorded "special" status.

Telephone inquiries concerning this decision should be directed to John Peng at 571-272-7272.

All other inquiries concerning the examination or status of the application should be directed to Patent Application Information Retrieval (PAIR) system.

The application is being forwarded to the examiner for action on the merits commensurate with this decision.

John Peng
TC 2600
Quality Assurance Specialist

UNITED STATES PATENT AND TRADEMARK OFFICE

Commissioner for Patents
United States Patent and Trademark Office
P.O. Box 1450
Alexandria, VA 22313-1450
www.uspto.gov

Gregory M. Zinkl
Abbott Laboratories
100 Abbott Park Road
Dept. 377/AP6A
Abbott Park, IL 60064-6008

COPY MAILED

APR 06 2007

OFFICE OF PETITIONS

In re Application of

Karl W. Molison
Application No. 10/977,288
Filed: October 29, 2004
Attorney Docket No. 065379-0003(6195P3US)

DECISION ON PETITION TO WITHDRAW FROM RECORD

This is a decision on the Request to Withdraw as attorney or agent of record under 37 C.F.R. § 1.36(b), filed January 31, 2007.

The request is **NOT APPROVED**.

A grantable request to withdraw as attorney/agent of record must be signed by every attorney/agent seeking to withdraw or contain a clear indication that one attorney is signing on behalf of another/others. A request to withdraw will not be approved unless at least 30 (thirty) days would remain between the date of approval and the later of the expiration date of a time to file a response or the expiration date of the maximum time period which can be extended under 37 C.F.R. § 1.136(a).

The request cannot be approved because no reasons for withdrawal have been provided. The Office cannot, at this time, determine whether practitioner's request is one of the mandatory or permissive reasons enumerated in 37 CFR 10.40. Any subsequent requests must include reasons for withdrawal. Please note that there is a space provided for on PTO/SB/83 (Request to Withdraw as Attorney or Agent) to supply practitioner's reasons.

The request is further unacceptable since requestor, Mr. Gregory M. Zinkl, is not an attorney associated with customer number 23492. The request to withdraw must be submitted by an attorney appointed under customer number 23492.

A courtesy copy of this decision is being mailed to applicant at the address noted in the Declaration for Patent Application.

All future communications from the Office will continue to be directed to the above-listed address until otherwise notified by applicant.

Telephone inquiries concerning this decision should be directed to Kimberly Inabinet at 571-272- 4618.

Frances Hicks
Petitions Examiner
Office of Petitions

cc: Karl W. Mollison
4020 North Harvard Avenue
Arlington Heights, IL 60004

cc: Cameron Kerrigan
Squire, Sanders & Dempsey, LLP
One Maritime Plaza, Suite 300
San Francisco, CA 94111-3492

UNITED STATES PATENT AND TRADEMARK OFFICE

Commissioner for Patents
United States Patent and Trademark Office
P.O. Box 1450
Alexandria, VA 22313-1450
www.uspto.gov

Caterpillar Inc.
Intellectual Property Dept.
AB 6490
100 N.E. Adams Street
PEORIA IL 61629-6490

COPY MAILED
OCT 15 2007
OFFICE OF PETITIONS

In re Application of	:	
Tom Sopko et al.	:	
Application No. 10/977,293	:	DECISION ON PETITION
Filed: October 29, 2004	:	
Attorney Docket No. 03-320.1	:	

This is a decision on the petition under the unintentional provisions of 37 CFR 1.137(b), filed January 12, 2007, to revive the above-identified application.

The petition is **GRANTED**.

This application became abandoned for failure to timely pay the issue and publication fees on or before December 1, 2006, as required by the Notice of Allowance and Fee(s) Due, mailed September 1, 2006. Accordingly, the date of abandonment of this application is December 2, 2006.

The petition satisfies the requirements of 37 CFR 1.137(b) in that petitioner has supplied (1) the reply in the form of payment of the issue fee of $1,400 and the publication fee of $300, (2) the petition fee of $1,500; and (3) a proper statement of unintentional delay.

Telephone inquiries concerning this decision should be directed to Terri Williams at (571) 272-2991.

This application is being referred to Publishing Division for processing into a patent.

Liana Walsh
Petitions Examiner
Office of Petitions

UNITED STATES PATENT AND TRADEMARK OFFICE

Commissioner for Patents
United States Patent and Trademark Office
P.O. Box 1450
Alexandria, VA 22313-1450
www.uspto.gov

PATENT LAW GROUP LLP
2635 NORTH FIRST STREET
SUITE 223
SAN JOSE, CA 95134

COPY MAILED
NOV 0 8 2006
OFFICE OF PETITIONS

In re Application of	:	
MILPITAS, et al.	:	
Application No. 10/977,294	:	DECISION GRANTING PETITION
Filed: October 28, 2004	:	UNDER 37 CFR 1.313(c)(2)
Attorney Docket No. LUM-04-03-05	:	

This is a decision on the petition under 37 CFR 1.313(c)(2), filed November 7, 2006, to withdraw the above-identified application from issue after payment of the issue fee.

The petition is **GRANTED**.

The above-identified application is withdrawn from issue for consideration of a submission under 37 CFR 1.114 (request for continued examination). *See* 37 CFR 1.313(c)(2).

Petitioner is advised that the issue fee paid on October 16, 2006 cannot be refunded. If, however, this application is again allowed, petitioner may request that it be applied towards the issue fee required by the new Notice of Allowance.[1]

Telephone inquiries regarding this decision should be directed to Patricia Volpe at 571-272-6825.

This application is being referred to Technology Center AU 2826 for processing of the request for continued examination under 37 CFR 1.114 and for consideration of the concurrently filed Amendment and Information Disclosure Statement.

Frances Hicks
Petitions Examiner
Office of Petitions

---

[1] *The request to apply the issue fee to the new Notice may be satisfied by completing and returning the new Part B – Fee(s) Transmittal Form (along with any balance due at the time of submission). Petitioner is advised that the Issue Fee Transmittal Form must be completed and timely submitted to avoid abandonment of the application.*

UNITED STATES PATENT AND TRADEMARK OFFICE

Commissioner for Patents
United States Patent and Trademark Office
P.O. Box 1450
Alexandria, VA 22313-1450
www.uspto.gov

COPY MAILED
AUG 01 2007
OFFICE OF PETITIONS

DAVOOD KHALILI
P. O. BOX 743
SANTA CLARA CA 95052

In re Application of	:	
Davood Khalili	:	
Application No. 10/977,299	:	ON PETITION
Filed: November 1, 2004	:	
Attorney Docket No.	:	

This is a decision on the petition under the unintentional provisions of 37 CFR 1.137(b), filed March 19, 2007, to revive the above-identified application.

The petition is **DISMISSED**.

The application became abandoned for failure to reply in a timely manner to the Restriction Requirement, mailed June 6, 2006, which set a shortened statutory period for reply of one (1) month or thirty (30) days (whichever is later). No extensions of time under the provisions of 37 CFR 1.136(a) were obtained. Accordingly, the application became abandoned on July 7, 2006.

A grantable petition under 37 CFR 1.137(b) must be accompanied by: (1) the required reply, unless previously filed; (2) the petition fee as set forth in 37 CFR 1.17(m); (3) a statement that the entire delay in filing the required reply from the due date for the reply until the filing of a grantable petition pursuant to 37 CFR 1.137(b) was unintentional; and (4) any terminal disclaimer (and fee as set forth in 37 CFR 1.20(d)) required by 37 CFR 1.137(d). Where there is a question as to whether either the abandonment or the delay in filing a petition under 37 CFR 1.137 was unintentional, the Director may require additional information. See MPEP 711.03(c)(II)(C) and (D). The instant petition lacks item(s) 1.

In this instance the petitioner failed to elect which invention that he wishes for the Office to examine in this application.

Further correspondence with respect to this matter should be addressed as follows:

By Mail: Mail Stop PETITION
Commissioner for Patents
P. O. Box 1450
Alexandria, VA 22313-1450

By hand: U. S. Patent and Trademark Office
Customer Service Window, Mail Stop Petitions
Randolph Building
401 Dulany Street
Alexandria, VA 22314

The centralized facsimile number is **(571) 273-8300.**

Any request for reconsideration of this decision must be submitted within **TWO (2) MONTHS** from the mail date of this decision. Extensions of time under 37 CFR 1.136(a) are permitted. The reconsideration request should include a cover letter entitled "Renewed Petition under 37 CFR 1.137(b)." This is **not** a final agency action within the meaning of 5 U.S.C. § 704.

Telephone inquiries concerning this decision should be directed to the April Wise at (571) 272-1642.

Irvine Dingle
Petition Examiner
Office of Petitions

UNITED STATES PATENT AND TRADEMARK OFFICE

Commissioner for Patents
United States Patent and Trademark Office
P.O. Box 1450
Alexandria, VA 22313-1450
www.uspto.gov

DAVOOD KHALILI
P. O. BOX 743
SANTA CLARA CA 95052

COPY MAILED
MAR 15 2010

In re Application of
Davood Khalili
Application No. 10/977,299
Filed: November 1, 2004
Attorney Docket No.

ON PETITION

This is a decision on the renewed petition under the unintentional provisions of 37 CFR 1.137(b), filed November 25, 2008, to revive the above-identified application.

The petition is **DISMISSED**.

The application became abandoned for failure to reply in a timely manner to the Restriction Requirement, mailed June 6, 2006, which set a shortened statutory period for reply of one (1) month or thirty (30) days (whichever is later). No extensions of time under the provisions of 37 CFR 1.136(a) were obtained. Accordingly, the application became abandoned on July 7, 2006.

A grantable petition under 37 CFR 1.137(b) must be accompanied by: (1) the required reply, unless previously filed; (2) the petition fee as set forth in 37 CFR 1.17(m); (3) a statement that the entire delay in filing the required reply from the due date for the reply until the filing of a grantable petition pursuant to 37 CFR 1.137(b) was unintentional; and (4) any terminal disclaimer (and fee as set forth in 37 CFR 1.20(d)) required by 37 CFR 1.137(d). Where there is a question as to whether either the abandonment or the delay in filing a petition under 37 CFR 1.137 was unintentional, the Director may require additional information. See MPEP 711.03(c)(II)(C) and (D). The instant petition lacks item(s) 3.

With respect to the amendment and petition:

The amendment filed is not acceptable. In this regard, petitioner's attention is directed to 37 CFR 1.33(b), which states.

(b) Amendments and other papers. Amendments and other papers, except for written assertions pursuant to § 1.27(c)(2)(ii) of this part, filed in the application must be signed by:
(1) A registered patent attorney or patent agent of record appointed in compliance with § 1.32(b);
(2) A registered patent attorney or patent agent not of record who acts in a representative capacity under the provisions of § 1.34;
(3) An assignee as provided for under §3.71(b) of this chapter; or

(4) All of the applicants (§ 1.41(b)) for patent, unless there is an assignee of the entire interest and such assignee has taken action in the application in accordance with § 3.71 of this chapter.

An unsigned amendment (or other paper) or one not properly signed by a person having authority to prosecute the application is not entered. This applies, for instance, where the amendment (or other paper) is signed by only one of two applicants and the one signing has not been given a power of attorney by the other applicant.

Therefore, as the required renewed petition filed November 25, 2008, is missing page 2 and the amendment is unsigned by the inventor, the petition is considered to be an improper.

A review of the records also shows that petitioner filed drawings on November 25, 2008. The drawings fail to comply with the requirement of 37 CFR 1.84(d) which states:

Drawings: One or more application drawings shall be amended in the following manner: Any changes to an application drawing must be in compliance with § 1.84 and must be submitted on a replacement sheet of drawings which shall be an attachment to the amendment document and, in the top margin, labeled "Replacement Sheet". Any replacement sheet of drawings shall include all of the figures appearing on the immediate prior version of the sheet, even if only one figure is amended. Any new sheet of drawings containing an additional figure must be labeled in the top margin as "New Sheet". All changes to the drawings shall be explained, in detail, in either the drawing amendment or remarks section of the amendment paper.

(1) A marked-up copy of any amended drawing figure, including annotations indicating the changes made, may be included. The marked-up copy must be clearly labeled as "Annotated Sheet" and must be presented in the amendment or remarks section that explains the change to the drawings.

(2) A marked-up copy of any amended drawing figure, including annotations indicating the changes made, must be provided when required by the examiner.

Petitioner is required to provide the Office with a detailed explanation seeking to excuse the delay in filing a timely reply to the petition decision mailed August 1, 2007 which set a period for reply within Two (2) Months.

Any request for reconsideration of this decision must be submitted within **TWO (2) MONTHS** from the mail date of this decision. Extensions of time under 37 CFR 1.136(a) are permitted. The reconsideration request should include a cover letter entitled "Renewed Petition under 37 CFR 1.137(b)." This is **not** a final agency action within the meaning of 5 U.S.C. § 704.

Further correspondence with respect to this matter should be addressed as follows:

By Mail: Mail Stop PETITION
Commissioner for Patents
P. O. Box 1450
Alexandria, VA 22313-1450

By hand: U. S. Patent and Trademark Office
Customer Service Window, Mail Stop Petitions
Randolph Building
401 Dulany Street
Alexandria, VA 22314

The centralized facsimile number is **(571) 273-8300.**

Telephone inquiries concerning this decision should be directed to the undersigned at (571) 272-1642.

April M. Wise
Petition Examiner
Office of Petitions

UNITED STATES PATENT AND TRADEMARK OFFICE

Commissioner for Patents
United States Patent and Trademark Office
P.O. Box 1450
Alexandria, VA 22313-1450
www.uspto.gov

TRASK BRITT
P. O. BOX 2550
SALT LAKE CITY, UT 84110

COPY MAILED

MAY 10 2007

OFFICE OF PETITIONS

In re Application of Chad A. Cobbley et al Application No. 10/977,301 Filed: October 29, 2004 Attorney Docket No. 2269-3639.5US (97-1383.05)	DECISION GRANTING PETITION UNDER 37 CFR 1.313(c)(2)

This is a decision on the petition, filed May 9, 2007, under 37 CFR 1.313(c)(2) to withdraw the above-identified application from issue after payment of the issue fee.

The petition is **GRANTED**.

The above-identified application is withdrawn from issue for consideration of a submission under 37 CFR 1.114 (request for continued examination). See 37 CFR 1.313(c)(2).

Petitioner is advised that the issue fee paid on March 5, 2007 in the above-identified application cannot be refunded. If, however, the above-identified application is again allowed, petitioner may request that it be applied towards the issue fee required by the new Notice of Allowance.[1]

Telephone inquiries should be directed to the undersigned at (571) 272-3218.

This matter is being referred to Technology Center AU 1725 for processing of the request for continued examination under 37 CFR 1.114 and for consideration of the Information Disclosure Statement.

Frances Hicks
Petitions Examiner
Office of Petitions

C:\Documents and Settings\fhicks\My Documents\470\May10\977301.wpd

---

[1] *The request to apply the issue fee to the new Notice may be satisfied by completing and returning the new Part B – Fee(s) Transmittal Form (along with any balance due at the time of submission). Petitioner is advised that the Issue Fee Transmittal Form must be completed and timely submitted to avoid abandonment.*

UNITED STATES PATENT AND TRADEMARK OFFICE

Commissioner for Patents
United States Patent and Trademark Office
P.O. Box 1450
Alexandria, VA 22313-1450
www.uspto.gov

Paper No.

David Aker
23 Southern Road
Hartsdale NY 10530

MAILED

MAY 04 2009

OFFICE OF PETITIONS

In re Application of	:	
Gabor Blasko	:	
Application No. 10/977,322	:	DECISION ON PETITION
Filed: October 30, 2004	:	PURSUANT TO
Attorney Docket No.:	:	37 C.F.R. § 1.137(B)
YOR920040382US1	:	
Title: INPUT METHOD AND	:	
APPARATUS USING TACTILE	:	
GUIDANCE AND BI-DIRECTIONAL	:	
SEGMENTED STROKE	:	

This is a decision on the petition pursuant to 37 C.F.R. § 1.137(b), filed October 27, 2008, to revive the above-identified application.

This petition pursuant to 37 C.F.R. § 1.137(b) is **GRANTED**.

The above-identified application became abandoned for failure to reply in a timely manner to the non-final Office action, mailed January 8, 2008, which set a shortened statutory period for reply of three months. No response was received, and no extensions of time under the provisions of 37 C.F.R. § 1.136(a) were requested. Accordingly, the above-identified application became abandoned on April 9, 2008. A notice of abandonment was mailed on July 22, 2008.

A grantable petition pursuant to 37 C.F.R. § 1.137(b) must be accompanied by:

(1) The reply required to the outstanding Office action or notice, unless previously filed;
(2) The petition fee as set forth in 37 C.F.R. § 1.17(m);
(3) A statement that the entire delay in filing the required reply from the due date for the reply until the filing of a grantable petition pursuant to this paragraph was unintentional. The Commissioner may require additional information where there is a question whether the delay was unintentional, and;
(4) Any terminal disclaimer (and fee as set forth in 37 C.F.R. § 1.20(d)) required pursuant to paragraph (d) of this section.

With this petition, Petitioner has submitted the petition fee, an amendment, and the proper statement of unintentional delay. A terminal disclaimer is not required. As such, the first three requirements of Rule 1.137(b) have been met. The fourth requirement of Rule 1.137(b) is not applicable, as a terminal disclaimer is not required.[1]

The Technology Center will be notified of this decision. The Technology Center's support staff will notify the Examiner of this decision, so that the amendment that was received on October 27, 2008 can be processed.

Petitioner may find it beneficial to view Private PAIR within a fortnight of the present decision to ensure that the revival has been acknowledged by the Technology Center in response to this decision. It is noted that all inquiries with regard to any failure of that change in status should be directed to the Technology Center where that change of status must be effected - **the Office of Petitions cannot effectuate a change of status**.

Telephone inquiries regarding *this decision* should be directed to the undersigned at (571) 272-3225.[2] All other inquiries

---

1 See Rule 1.137(d).
2 Petitioner will note that all practice before the Office should be in writing, and the action of the Office will be based exclusively on the written record in the Office. See 37 C.F.R. § 1.2. As such, Petitioner is reminded that no telephone discussion may be controlling or considered authority for Petitioner's further action(s).

concerning examination procedures or status of the application should be directed to the Technology Center.

/Paul Shanoski/
Paul Shanoski
Senior Attorney
Office of Petitions

UNITED STATES PATENT AND TRADEMARK OFFICE

COMMISSIONER FOR PATENTS
UNITED STATES PATENT AND TRADEMARK OFFICE
P.O. BOX 1450
ALEXANDRIA, VA 22313-1450
www.uspto.gov

FOLEY & LARDNER LLP
150 EAST GILMAN STREET
P.O. BOX 1497
MADISON WI 53701-1497

MAILED

JUN 05 2009

OFFICE OF PETITIONS

In re Patent No. 7,449,738 :
Issued: November 11, 2008 :
Application No. 10/977,335 : PATENT TERM ADJUSTMENT
Filed: October 29, 2004 :
Dkt. No.: 032026-0837 :

This is a decision on the "REQUEST FOR RECONSIDERATION OF PATENT TERM ADJUSTMENT UNDER 37 C.F.R §1.705", filed November 5, 2008. This matter is being properly treated as an application for patent term adjustment pursuant to 37 CFR 1.705(d).

The request for reconsideration of patent term adjustment (PTA) is **DISMISSED**.

The above-identified application matured into U.S. Pat. No. 7,449,738 on November 11, 2008. The patent issued with a PTA 115 days. The request for reconsideration of patent term adjustment was timely filed within two months of the issue date of the patent. See, 37 CFR 1.705(d). Patentees request that the patent term adjustment be increased from 115 days to 342 days.

Patentees request reconsideration of the patent term adjustment based on the decision in Wyeth v. Dudas, 580 F. Supp. 2d 138, 88 U.S.P.Q. 2d 1538 (D.D.C. 2008). Patentees contend that pursuant to Wyeth, a PTO delay under 35 U.S.C. 154(b)(1)(A) overlaps with a delay under 35 U.S.C. 154(b)(1)(B) only if the delays occur on the same day.

Patentees maintain that the period of adjustment due to the three year delay by the Office, pursuant to 37 CFR 1.702(b), of 227 days and the period of adjustment due to examination delay, pursuant to 37 CFR 1.702(a), of 298 days do not overlap as these periods do not occur on the same day. The 227-day period is calculated based on the application having been filed under 35 U.S.C. 111(a) on October 29, 2004 and a request for continued examination having been filed on June 12, 2008. Patentees assert that in addition to this 227-day period, they are entitled to a period of adjustment due to examination delay pursuant to 37 CFR 1.702(a) of 298 days.

Under 37 CFR 1.703(f), patentees are entitled to a period of patent term adjustment equal to the period of delays based on the grounds set forth in 37 CFR 1.702 reduced by the period of time equal to the period of time during which patentees failed to engage in reasonable efforts to

conclude prosecution pursuant to 37 CFR 1.704. In other words, patentees are entitled to the period of Office delay reduced by the period of applicant delay.

Patentees do not dispute that the total period of Office delay is the sum of the period of three years delay and the period of examination delay, to the extent that these periods of delay are not overlapping. However, in effect, patentees contend that no portion of the three year delay period overlaps with the period of examination delay. Accordingly, patentees submit that the total period of adjustment for Office delay is 525 days (the sum of the period of three year delay (227 days) and the period of examination delay (298 days), reduced by zero days of overlap. As such, patentees assert entitlement to a patent term adjustment of 342 days (298 days *plus* 227 days *less* zero days of overlap *less* 183 days of applicant delay).

The Office agrees that as of the time of submission of the request for continued examination on June 12, 2008, the application was pending three years and 227 days. The Office agrees that certain action was not taken within a specified time frame, and, thus, the entry of a period of adjustment of 298 days is correct. At issue is whether patentees should accrue an additional 227 days of patent term adjustment for the Office taking in excess of three years to issue the patent as well as 298 days for Office failure to take a certain action within a specified time frame (or examination delay).

The Office contends that 227 days overlap. Patentees' calculation of the period of overlap is inconsistent with the Office's interpretation of this provision. 35 U.S.C. 154(b)(2)(A) limits the adjustment of patent term, as follows:

> To the extent that the periods of delay attributable to grounds specified in paragraph (1) overlap, the period of any adjustment granted under this subsection shall not exceed the actual number of days the issuance of the patent was delayed.

Likewise, 35 CFR 1.703(f) provides that:

> To the extent that periods of delay attributable to the grounds specified in § 1.702 overlap, the period of adjustment granted under this section shall not exceed the actual number of days the issuance of the patent was delayed.

As explained in Explanation of 37 CFR 1.703(f) and of the United States Patent and Trademark Office Interpretation of 35 U.S.C. 154(b)(2)(A), 69 Fed. Reg. 34283 (June 21, 2004), the Office interprets 35 U.S.C. 154(b)(2)(A) as permitting either patent term adjustment under 35 U.S.C. 154(b)(1)(A)(i)-(iv), or patent term adjustment under 35 U.S.C. 154(b)(1)(B), but not as permitting patent term adjustment under both 35 U.S.C. 154(b)(1)(A)(i)-(iv) and 154(b)(1)(B). Accordingly, the Office implements the overlap provision as follows:

> If an application is entitled to an adjustment under 35 U.S.C. 154(b)(1)(B), the entire period during which the application was pending (except for periods excluded under 35 U.S.C. 154(b)(1)(B)(i)-(iii)), and not just the period beginning three years after the actual

> filing date of the application, is the period of delay under 35 U.S.C. 154(b)(1)(B) in determining whether periods of delay overlap under 35 U.S.C. 154(b)(2)(A). Thus, any days of delay for Office issuance of the patent more than 3 years after the filing date of the application, which overlap with the days of patent term adjustment accorded prior to the issuance of the patent will not result in any additional patent term adjustment. See 35 U.S.C. 154(b)(1)(B), 35 U.S.C. 154(b)(2)(A), and 37 CFR § 1.703(f). See Changes to Implement Patent Term Adjustment Under Twenty Year Term; Final Rule, 65 Fed. Reg. 56366 (Sept. 18, 2000). See, also, Revision of Patent Term Extension and Patent Term Adjustment Provisions; Final Rule, 69 Fed. Reg. 21704 (April 22, 2004), 1282 Off. Gaz. Pat. Office 100 (May 18, 2004). See, also, Explanation of 37 CFR 1.703(f) and of the United States Patent and Trademark Office Interpretation of 35 U.S.C. 154(b)(2)(A), 69 Fed. Reg. 34283 (June 21, 2004).

The current wording of § 1.703(f) was revised in response to the misinterpretation of this provision by a number of Patentees. The rule was slightly revised to more closely track the corresponding language of 35 U.S.C. 154(b)(2)(A). The relevant portion differs only to the extent that the statute refers back to provisions of the statute whereas the rule refers back to sections of the rule. This was not a substantive change to the rule nor did it reflect a change of the Office's interpretation of 35 U.S.C. 154(b)(2)(A). As stated in the Explanation of 37 CFR 1.703(f) and of the United States Patent and Trademark Office Interpretation of 35 U.S.C. 154(b)(2)(A), the Office has consistently taken the position that if an application is entitled to an adjustment under the three-year pendency provision of 35 U.S.C. 154(b)(1)(B), the entire period during which the application was pending before the Office (except for periods excluded under 35 U.S.C. 154(b)(1)(B)(i)-(iii)), and not just the period beginning three years after the actual filing date of the application, is the relevant period under 35 U.S.C. 154(b)(1)(B) in determining whether periods of delay "overlap" under 35 U.S.C. 154(b)(2)(A).

This interpretation is consistent with the statute. Taken together the statute and rule provide that to the extent that periods of delay attributable to grounds specified in 35 U.S.C. 154(b)(1) and in corresponding § 1.702 overlap, the period of adjustment granted shall not exceed the actual number of days the issuance of the patent was delayed. The grounds specified in these sections cover the A) guarantee of prompt Patent and Trademark Office responses, B) guarantee of no more than 3-year application pendency, and C) guarantee or adjustments for delays due to interference, secrecy orders and appeals. A section by section analysis of 35 U.S.C. 154(b)(2)(A) specifically provides that:

> Section 4402 imposes limitations on restoration of term. In general, pursuant to [35 U.S.C.] 154(b)(2)(A)-(C), total adjustments granted for restorations under [35 U.S.C. 154](b)(1) are reduced as follows: (1) To the extent that there are multiple grounds for extending the term of a patent that may exist simultaneously (e.g., delay due to a secrecy order under [35 U.S.C.] 181 and administrative delay under [35 U.S.C.] 154(b)(1)(A)),

the term should not be extended for each ground of delay but only for the actual number of days that the issuance of a patent was delayed; See, 145 Cong. Rec. S14,718[1].

As such, the period for over three-year pendency does not overlap only to the extent that the actual dates in the period beginning three years after the date on which the application was filed overlap with the actual dates in the periods for failure of the Office to take action within specified time frames. In other words, consideration of the overlap does not begin three years after the filing date of the application.

In this instance, the relevant period under 35 U.S.C. 154(b)(1)(B) in determining whether periods of delay "overlap" under 35 U.S.C. 154(b)(2)(A) is the entire period during which the application was pending before the Office, October 29, 2004, to the date that the request for continued examination was filed on June 12, 2008. Prior to the issuance of the patent, 298 days of patent term adjustment were accorded for the Office failing to respond within a specified time frame during the pendency of the application.

At the time of filing of the request for continued examination on June 12, 2008, the application had been pending three years and 227 days after its filing date; over three year time ceased accruing upon submission of a request for continued examination on June 12, 2008. However, the Office did not delay 298 days and then delay an additional 227 days. Accordingly, 298 days of patent term adjustment (not 298 days and 227 days) was properly entered because the entire period of delay of 227 days attributable to the delay in the issuance of the patent overlaps with the adjustment of 298 days attributable to grounds specified in § 1.702(a)(1). Entry of both periods is not warranted.

In view thereof, no adjustment to the patent term will be made.

The Office acknowledges submission of the required application fee of $200.00. See, 37 CFR 1.18(e). The request for refund of the required application fee is hereby DISMISSED. Submission of the application fee is a prerequisite prior to treatment on the merits of any application for patent term adjustment.

Telephone inquiries specific to this matter should be directed to the undersigned at (571) 272-3205.

Alesia M. Brown
Petitions Attorney
Office of Petitions

---

[1] The AIPA is title IV of the Intellectual Property and Communications Omnibus Reform Act of 1999 (S. 1948), which was incorporated and enacted as law as part of Pub. L. 106-113. The Conference Report for H.R. 3194, 106th Cong. 1st Sess. (1999), which resulted in Pub. L. 106-113, does not contain any discussion (other than the incorporated language) of S. 1948. A section-by-section analysis of S. 1948, however, was printed in the Congressional Record at the request of Senator Lott, See 145 Cong. Rec. S14,708-26 (1999)(daily ed. Nov. 17, 1999).

UNITED STATES PATENT AND TRADEMARK OFFICE

Commissioner for Patents
United States Patent and Trademark Office
P.O. Box 1450
Alexandria, VA 22313-1450
www.uspto.gov

SHUMAKER & SIEFFERT, P. A.
1625 RADIO DRIVE
SUITE 300
WOODBURY MN 55125

9/23/09

In re Application of:
GERBER, MARTIN T. et al
Serial No.: 10/977,336
Filed: October 29, 2004
Docket: 1023-396US01
Title: NEUROSTIMULATION SYSTEM WITH DISTRIBUTED STIMULATORS

DECISION ON PETITION
under 37 CFR 1.181

This is a decision on the petition filed on Sep. 9, 2009 filed under 37 CFR 1.181 seeking to have several grounds of rejections in the Examiner's Answer designated as new grounds of rejection. The petition is being considered pursuant to 37 CFR 1.181, and no fee is required.

The petition is dismissed.

In the petition, petitioner indicates that on page 10 of the Examiner Answer mailed on July 9, 2009, the examiner's statement constitutes new grounds of rejection regarding "it is a well known fact that one does not want to activate bladder voiding along with sphincter retention simultaneously". A review of the entire Examiner Answer of July 9, 2009, it contains no new grounds of rejection. The examiner's statement on page 10 of the Examiner's Answer does not appear to be a new ground of rejection intended. After consulting with the examiner, a corrected or supplemental examiner's answer to correct or replace the above noted statement will be forthcoming.

The application is being forwarded to the Board of Patent Appeals and Interferences for further process and docketing. Any inquiry regarding this decision should be directed to Henry Yuen, Special Program Examiner, at (571) 272-4856.

PETITION DISMISSED.

Donald T. Hajec, Director
Technology Center 3700

UNITED STATES PATENT AND TRADEMARK OFFICE

UNITED STATES DEPARTMENT OF COMMERCE
United States Patent and Trademark Office
Address: COMMISSIONER FOR PATENTS
P.O. Box 1450
Alexandria, Virginia 22313-1450
www.uspto.gov

APPL NO.	FILING OR 371 (c) DATE	ART UNIT	FIL FEE REC'D	ATTY.DOCKET NO	DRAWINGS	TOT CLMS	IND CLMS
10/977,349	10/29/2004	2121	1460	072337-0015	2	44	7

CONFIRMATION NO. 6952

UPDATED FILING RECEIPT

OC000000015547928

31824
MCDERMOTT WILL & EMERY LLP
18191 VON KARMAN AVE.
IRVINE, CA 92612-7107

Date Mailed: 03/24/2005

Receipt is acknowledged of this regular Patent Application. It will be considered in its order and you will be notified as to the results of the examination. Be sure to provide the U.S. APPLICATION NUMBER, FILING DATE, NAME OF APPLICANT, and TITLE OF INVENTION when inquiring about this application. Fees transmitted by check or draft are subject to collection. Please verify the accuracy of the data presented on this receipt. **If an error is noted on this Filing Receipt, please write to the Office of Initial Patent Examination's Filing Receipt Corrections, facsimile number 703-746-9195. Please provide a copy of this Filing Receipt with the changes noted thereon. If you received a "Notice to File Missing Parts" for this application, please submit any corrections to this Filing Receipt with your reply to the Notice. When the USPTO processes the reply to the Notice, the USPTO will generate another Filing Receipt incorporating the requested corrections (if appropriate).**

Applicant(s)

Michael Marian, Penngrove, CA;

Assignment For Published Patent Application

HydroPoint Data Systems, Inc., Petaluma, CA

Power of Attorney: The patent practitioners associated with Customer Number **31824**.

Domestic Priority data as claimed by applicant

This appln claims benefit of 60/515,905 10/29/2003
and claims benefit of 60/515,932 10/29/2003
and claims benefit of 60/515,628 10/29/2003

Foreign Applications

If Required, Foreign Filing License Granted: 01/18/2005

The country code and number of your priority application, to be used for filing abroad under the Paris Convention, is US10/977,349

Projected Publication Date: 06/30/2005

Non-Publication Request: No

Early Publication Request: No

**** SMALL ENTITY ****

Title

Method and system for controlling irrigation using computed evapotranspiration values

Preliminary Class

700

LICENSE FOR FOREIGN FILING UNDER
Title 35, United States Code, Section 184
Title 37, Code of Federal Regulations, 5.11 & 5.15

GRANTED

The applicant has been granted a license under 35 U.S.C. 184, if the phrase "IF REQUIRED, FOREIGN FILING LICENSE GRANTED" followed by a date appears on this form. Such licenses are issued in all applications where the conditions for issuance of a license have been met, regardless of whether or not a license may be required as set forth in 37 CFR 5.15. The scope and limitations of this license are set forth in 37 CFR 5.15(a) unless an earlier license has been issued under 37 CFR 5.15(b). The license is subject to revocation upon written notification. The date indicated is the effective date of the license, unless an earlier license of similar scope has been granted under 37 CFR 5.13 or 5.14.

This license is to be retained by the licensee and may be used at any time on or after the effective date thereof unless it is revoked. This license is automatically transferred to any related applications(s) filed under 37 CFR 1.53(d). This license is not retroactive.

The grant of a license does not in any way lessen the responsibility of a licensee for the security of the subject matter as imposed by any Government contract or the provisions of existing laws relating to espionage and the national security or the export of technical data. Licensees should apprise themselves of current regulations especially with respect to certain countries, of other agencies, particularly the Office of Defense Trade Controls, Department of State (with respect to Arms, Munitions and Implements of War (22 CFR 121-128)); the Office of Export Administration, Department of Commerce (15 CFR 370.10 (j)); the Office of Foreign Assets Control, Department of Treasury (31 CFR Parts 500+) and the Department of Energy.

NOT GRANTED

No license under 35 U.S.C. 184 has been granted at this time, if the phrase "IF REQUIRED, FOREIGN FILING LICENSE GRANTED" DOES NOT appear on this form. Applicant may still petition for a license under 37 CFR 5.12, if a license is desired before the expiration of 6 months from the filing date of the application. If 6 months has lapsed from the filing date of this application and the licensee has not received any indication of a secrecy order under 35 U.S.C. 181, the licensee may foreign file the application pursuant to 37 CFR 5.15(b).

UNITED STATES PATENT AND TRADEMARK OFFICE

Commissioner for Patents
United States Patent and Trademark Office
P.O. Box 1450
Alexandria, VA 22313-1450
www.uspto.gov

FENWICK & WEST LLP
SILICON VALLEY CENTER
801 CALIFORNIA STREET
MOUNTAIN VIEW CA 94041

COPY MAILED

DEC 0 8 2008

OFFICE OF PETITIONS

In re Application of :
Marston et al. :
Application No. 10/977,354 : DECISION ON PETITION
Filed: October 28, 2004 :
Attorney Docket No. 23682-09504 :

This is a decision on the petition, filed October 29, 2008, which is being treated as a petition under 37 CFR 1.181 (no fee) requesting withdrawal of the holding of abandonment in the above-identified application.

The petition is **DISMISSED**.

Any request for reconsideration of this decision should be filed within two (2) months from the mail date of this decision. *Note* 37 CFR 1.181(f). The request for reconsideration should include a cover letter and be entitled as a "Renewed Petition under 37 CFR 1.181 to Withdraw the Holding of Abandonment."

This application was held abandoned for failure to reply to the non-final Office action mailed April 21, 2008, which set a three (3) month shortened statutory period for reply. A Notice of Abandonment was mailed on November 21, 2008.

Petitioner asserts that the Office action dated April 21, 2008 was not received. Petitioner has provided a docket record where the non-final Office Action would have been entered had it been received.

A review of the written record indicates no irregularity in the mailing of the Office action, and, in the absence of any irregularity, there is a strong presumption that the Office action was properly mailed to the practitioner at the address of record. This presumption may be overcome by a showing that the Office action was not in fact received. In this regard, the showing required to establish the failure to receive the Office action must consist of the following:

1. a statement from practitioner stating that the Office action was not received by the practitioner. The statement should also describe the system used for recording an Office action received at the correspondence address of record and establish that the docketing system was sufficiently reliable;

2. a statement from the practitioner attesting to the fact that a search of the file jacket and docket records indicates that the Office action was not received; and

3. a copy of the master docket for the firm docket record where the nonreceived Office action would have been entered had it been received must be attached to and referenced in the practitioner's statement. That is, if a three month period for reply was set in the nonreceived Office action, a copy of the master docket report showing all replies docketed for a date three months from the mail date of the nonreceived Office action must be submitted as documentary proof of nonreceipt of the Office action. If no master docket exists, the practitioner should so state and provide other evidence such, as but not limited: to the application file jacket, incoming mail log; calendar; reminder system or individual docket record for the application in question.

See MPEP § 711.03(c) under subheading "Petition to Withdraw Holding of Abandonment Based on Failure to Receive Office Action," and "Withdrawing the Holding of Abandonment When Office Actions Are Not Received," 1156 Official Gazette 53 (November 16, 1993).

The petition fails to satisfy all of the above-stated requirements. Item (1) has not been satisfied.

As to item (1), petitioner needs to describe the system used to record an Office action and establish that the docketing system is sufficiently reliable.

Further correspondence with respect to this matter should be addressed as follows:

By Mail: Mail Stop PETITION
Commissioner for Patents
P. O. Box 1450
Alexandria, VA 22313-1450

By hand: U. S. Patent and Trademark Office
Customer Service Window, Mail Stop Petitions
Randolph Building
401 Dulany Street
Alexandria, VA 22314

By facsimile: **(571) 273-8300**
Attn: Office of Petitions

Telephone inquiries concerning this decision should be directed to the undersigned at (571) 272-3215.

Charlema Grant
Petitions Attorney
Office of Petitions

UNITED STATES PATENT AND TRADEMARK OFFICE

Commissioner for Patents
United States Patent and Trademark Office
P.O. Box 1450
Alexandria, VA 22313-1450
www.uspto.gov

FENWICK & WEST LLP
SILICON VALLEY CENTER
801 CALIFORNIA STREET
MOUNTAIN VIEW CA 94041

COPY MAILED
DEC 22 2008

In re Application of	:	
Marston et al.	:	
Application No. 10/977,354	:	DECISION ON PETITION
Filed: October 28, 2004	:	
Attorney Docket No. 23682-09504	:	

This is a decision on the renewed petition, filed December 16, 2008, which is being treated as a petition under 37 CFR 1.181 (no fee) requesting withdrawal of the holding of abandonment in the above-identified application.

The petition is **GRANTED**.

This application was held abandoned for failure to reply to the non-final Office action mailed April 21, 2008, which set a three (3) month shortened statutory period for reply. A Notice of Abandonment was mailed on November 21, 2008.

Petitioner asserts that the Office action dated April 21, 2008 was not received. Petitioner has provided a docket record where the non-final Office Action would have been entered had it been received. A petition filed under 37 CFR 1.181 was dismissed on December 8, 2008.

A review of the written record indicates no irregularity in the mailing of the Office action, and, in the absence of any irregularity, there is a strong presumption that the Office action was properly mailed to the practitioner at the address of record. This presumption may be overcome by a showing that the Office action was not in fact received. In this regard, the showing required to establish the failure to receive the Office action must consist of the following:

1. a statement from practitioner stating that the Office action was not received by the practitioner. The statement should also describe the system used for recording an Office action received at the correspondence address of record and establish that the docketing system was sufficiently reliable;

2. a statement from the practitioner attesting to the fact that a search of the file jacket and docket records indicates that the Office action was not received; and

3. a copy of the master docket for the firm docket record where the nonreceived Office action would have been entered had it been received must be attached to and referenced in the practitioner's statement. That is, if a three month period for reply

> was set in the nonreceived Office action, a copy of the master docket report showing all replies docketed for a date three months from the mail date of the nonreceived Office action must be submitted as documentary proof of nonreceipt of the Office action. If no master docket exists, the practitioner should so state and provide other evidence such, as but not limited: to the application file jacket, incoming mail log; calendar; reminder system or individual docket record for the application in question

See MPEP § 711.03(c) under subheading "Petition to Withdraw Holding of Abandonment Based on Failure to Receive Office Action," and "Withdrawing the Holding of Abandonment When Office Actions Are Not Received," 1156 Official Gazette 53 (November 16, 1993).

The petition satisfies the above-stated requirements. Accordingly, the application was not abandoned in fact.

In view of the above, the Notice of Abandonment is hereby vacated and the holding of abandonment withdrawn.

This application is being referred to the Technology Center technical support staff of Art Unit 2446 for re-mailing the Office action of April 21, 2008. The period for reply will run from the mailing date of the Office action.

Telephone inquiries concerning this decision should be directed to the undersigned at (571) 272-3215.

Charlema Grant

Charlema Grant
Petitions Attorney
Office of Petitions

UNITED STATES PATENT AND TRADEMARK OFFICE

UNITED STATES DEPARTMENT OF COMMERCE
United States Patent and Trademark Office
Address: COMMISSIONER FOR PATENTS
P.O. Box 1450
Alexandria, Virginia 22313-1450
www.uspto.gov

MCDERMOTT, WILL & EMERY
11682 EL CAMINO REAL
SUITE 400
SAN DIEGO, CA 92130-2047

Mail Date: 04/20/2010

Applicant	: Douglas Hanahan	: DECISION ON REQUEST FOR
Patent Number	: 7598341	: RECALCULATION of PATENT
Issue Date	: 10/06/2009	: TERM ADJUSTMENT IN VIEW
Appliction No	: 10/977,367	: OF WYETH AND NOTICE OF INTENT TO
Filed	: 10/29/2004	: ISSUE CERTIFICATE OF CORRECTION
		:

The Request for Recalculation is **GRANTED** to the extent indicated.

The patent term adjustment has been determined to be **568** days. The USPTO will *sua sponte* issue a certificate of correction reflecting the amount of PTA days determined by the recalculation.

Prior to the issuance of the certificate of correction, the USPTO will afford patentee an opportunity to be heard and request reconsideration. Accordingly, patentee has **one month or thirty (30) days**, whichever is longer, to file a request for reconsideration of this patent term adjustment calculation. See 35 U.S.C. 154(b)(3)(B)(ii) and 37 CFR 1.322(a)(4). No extensions of time will be granted under 37 CFR 1.136.

Patentee should use document code PET.OP if electronically filing a request for reconsideration of this patent term adjustment calculation. The patentee must also include the information required by 37 CFR 1.705(b)(2) and the fee required by 37 CFR 1.18(e). If patentee does not file a timely request for reconsideration of this patent term adjustment calculation including the information required by 37 CFR 1.705(b)(2) and the fee required by 37 CFR 1.18(e), the USPTO will issue a certificate of correction reflecting the PTA determination noted above.

Patentee should be aware that in order to preserve the right to review in the United States District Court for the District of Columbia of the USPTO patent term adjustment determination, patentee must ensure that he or she also take the steps required under 35 U.S.C. 154(b)(4)(A) in a timely manner. Nothing in the request for recalculation should be construed as providing an alternative time frame for commencing a civil action under 35 U.S.C. 154(b)(4)(A).

Any questions concerning this decision should be directed to the Office of Patent Legal Administration at 571-272-7702.

UNITED STATES PATENT AND TRADEMARK OFFICE

Commissioner for Patents
United States Patent and Trademark Office
P.O. Box 1450
Alexandria, VA 22313-1450
www.uspto.gov

BRADLEY A. FORREST
SCHWEGMAN, LUNDBERG, WOESSNER & KLUTH, P.A.
P.O. BOX 2938
MINNEAPOLIS MN 55402

COPY MAILED

APR 13 2009

OFFICE OF PETITIONS

In re Application of	:	
Linares et al.	:	DECISION ON PETITION TO
Application Number: 10/977377	:	WITHDRAW HOLDING OF
Filing Date: 10/29/2004	:	ABANDONMENT
Attorney Docket Number:	:	
15423.1USC7	:	

This is a decision on the petition filed on March 6, 2009, to withdraw the holding of abandonment in the above-identified application.

The petition is **GRANTED**.

A Notice of Abandonment was mailed on February 20, 2009, stating that the application was abandoned for failure to timely file a proper reply to the non-final Office action mailed on August 20, 2008.

Petitioners assert that the Notice of Abandonment should be withdrawn because a timely reply was filed.

A review of the record reveals that on August 20, 2008, a non-final Office action was mailed, setting a three (3) month shortened statutory period for reply.

In response, on February 20, 2009, an amendment and a petition and the fee for a three (3) month extension of time, were filed.

As such, a timely reply was filed in the form of the amendment and extension of time filed on February 20, 2009. Therefore, there is no abandonment in fact.

The holding of abandonment is **withdrawn**. The Notice of Abandonment is **vacated**.

The application is referred to Technology Center Art Unit 1792 for further processing.

Telephone inquiries concerning this matter may be directed to the undersigned at (571)272-3231.

D Wood

Douglas I. Wood
Senior Petitions Attorney
Office of Petitions

UNITED STATES PATENT AND TRADEMARK OFFICE

COMMISSIONER FOR PATENTS
UNITED STATES PATENT AND TRADEMARK OFFICE
P.O. BOX 1450
ALEXANDRIA, VA 22313-1450
www.uspto.gov

EDWARDS & ANGELL, LLP
P.O. BOX 55874
BOSTON, MA 02205

COPY MAILED
AUG 29 2005
OFFICE OF PETITIONS

In re Application of :
Ellison et al. :
Application No. 10/977,389 :
Filed: October 29, 2004 : ON PETITION
Attorney Docket Number: :
62242 (32822) :

This is in response to Applicant's Response to Notice to File Missing Parts of Application and Petition for Reconsideration of Items Originally Submitted, filed August 5, 2005, requesting that the application be accorded a filing date including Figure 6A as part of the original disclosure.

Application papers in the above-identified application were filed on October 29, 2004. On May 10, 2005, the Office of Initial Patent Examination mailed a Notice to File Missing Parts of Nonprovisional Application, indicating, *inter alia*, that Figure 6A described in the specification appeared to have been omitted from the application. The Notice set a two-month period for reply, with extensions of time available under 37 CFR §1.136(a).

In response, Applicant files the instant petition and states that it is his belief that Figure 6A was included among the original application papers filed on October 29, 2004, but was inadvertently overlooked by this Office. Applicant has resubmitted what is putatively a copy of the originally filed Figure 6A and has marked Figure 6A in red ink "to clarify the Figure numbering".

A review of the putative copy of Figure 6A and of the papers filed on October 29, 2004 reveal that the Figure labeled 6A filed with the petition is the same as an unidentified Figure submitted with the application papers on filing.

It is obvious from the petition that no drawing Figures were actually missing on October 29, 2004. Rather, the Figure was simply not labeled as a result of Applicant's filing error. However, the Notice mailed May 10, 2005, was correct in stating

that Figure 6A described in the specification appeared to have been omitted from the application. Therefore, the requirement to submit the omitted Figure set forth in the Notice will not be withdrawn.

Accordingly, the petition is dismissed.

Applicants are advised that a petition is not necessary in this instance to add the drawing figures. New drawings may be entered by the primary examiner without a petition so long as the drawings contain no new matter. See, MPEP § 608.02(a). Applicants may add figure(s) described in the specification (by way of amendment) on the basis that the drawings are not new matter.

The petition fee will not be refunded, since the petition was not necessitated by any error on the part of the USPTO.

This application is being forwarded to the Office of Initial Patent Examination, Customer Corrections, for further processing, with the filing date of October 29, 2004, using the drawing Figures filed on that date.

Telephone inquiries related to this decision may be directed to the undersigned at (571) 272-3232.

Derek L. Woods
Petitions Attorney
Office of Petitions

OIPE
DEC 1 9 2005
PATENT & TRADEMARK OFFICE

IFW

IN THE UNITED STATE PATENT AND TRADEMARK OFFICE

December 15, 2005

In re application of	:	Gabriel Navarro
Application No.	:	10/977,390
Filed	:	October 29, 2004
For	:	**ADJUSTABLE BROOM DEVICE**
Examiner	:	To Be Determined Chin, Randall
Art Unit	:	1744
Our File No.	:	4976.001

BEST AVAILABLE COPY

PETITION TO MAKE SPECIAL BECAUSE OF ACTUAL INFRINGEMENT
(37 C.F.R. §1.102 AND M.P.E.P. §708.02)

Commissioner for Patents
P.O. Box 1450
Alexandria, VA 22313-1450

Dear Commissioner:

Applicant hereby petitions to make this application special because of actual Infringement pursuant to 37 C.F.R. §1.102(d) and M.P.E.P. §708.02 as follows:

1. Accompanying Material

Accompanying this petition is:

Statement by Applicant's attorney in Support of Petition to Make Special Because of Actual Infringement

2. Fee (37 C.F.R. §1.17(h)

The fee required is to be paid by the enclosed check for $130.00.

12/21/2005 MAHMED1 00000016 10977390
01 FC:1464 130.00 OP

PETITION GRANTED

William Kovynski
Special Program Examiner
Technology Center 1700
JAN 1 8 2006

UNITED STATES PATENT AND TRADEMARK OFFICE

Commissioner for Patents
United States Patent and Trademark Office
P.O. Box 1450
Alexandria, VA 22313-1450
www.uspto.gov

PALMER & DODGE, LLP
KATHLEEN M. WILLIAMS
111 HUNTINGTON AVENUE
BOSTON MA 02199

COPY MAILED

MAY 0 9 2005

OFFICE OF PETITIONS

In re Application of	:	
Communi et al.	:	
Application No. 10/977,395	:	
Filed: October 29, 2004	:	ON PETITION
Attorney Docket No. 9409/2063B	:	

This is in response to the petition filed January 24, 2005, requesting that the above-identified application be accorded a filing date of October 29, 2004, with Figures 2-4 as part of the original disclosure.

On October 29, 2004, applicants filed the above-identified application. On December 8, 2004, the Office mailed a "Notice to File Missing Parts of Nonprovisional Application" (Notice), stating that the application had been accorded a filing date of October 29, 2004; however, it appeared that an oath/declaration and Figures 2-4 appeared to have been omitted. Further, the Notice required that applicants pay a surcharge for the late filing of the oath/declaration.

In response, on January 24, 2005, applicants filed the present petition, Figures 2, 3, 4 and 4b, and a $65.00 surcharge. Additionally, applicants authorized payment of a $130.00 petition fee. Applicants asserted that the above-identified application is a divisional application of application No. 10/152,058, the entirety of which, including Figures 2-4, was incorporated by reference in the first paragraph of the specification.

Initially, the Office notes that the fee for a petition under 37 CFR 1.182 is $400.00. Accordingly, the rules and statutory provisions governing the operations of the Office require payment of a fee upon filing a petition under 37 CFR 1.182. Applicants did not authorize the Office to charge any fees beyond the $130.00 petition fee. Therefore, no consideration on the merits can be given to the present petition until a renewed petition

under 37 CFR 1.182 and the balance of $270.00 is received by the Office within TWO (2) MONTHS of the date of this decision. See 37 CFR 1.181(f).

Accordingly, the petition is **dismissed**.

However, the Office strongly urges applicants to review Section 201.06(c) of the Manual of Patent Examining Procedure and determine whether the filing of a renewed petition is necessary.

Further correspondence with respect to this matter should be addressed as follows:

By mail: Mail Stop Petition
Commissioner for Patents
P.O. Box 1450
Alexandria, VA 22313-1450

By FAX: (703) 872-9306
Attn: Office of Petitions

By hand: Customer Service Window
Randolph Building
401 Dulany Street
Alexandria, VA 22314

Telephone inquiries should be directed to the undersigned at (571) 272-3211.

Christina Tartera Donnell

Christina Tartera Donnell
Petitions Attorney
Office of Petitions

UNITED STATES PATENT AND TRADEMARK OFFICE

Commissioner for Patents
United States Patent and Trademark Office
P.O. Box 1450
Alexandria, VA 22313-1450
www.uspto.gov

AGILENT TECHNOLOGIES INC.
INTELLECTUAL PROPERTY
ADMINISTRATION M/S DU404
P.O. BOX 7599
LOVELAND CO 80537-0599

COPY MAILED
DEC 12 2006
OFFICE OF PETITIONS

In re Application of	:	
John D. Larson III	:	
Application No. 10/977,398	:	ON PETITION
Filed: October 29, 2004	:	
Attorney Docket No. 10041174-01	:	

This is a decision on the petition, filed December 8, 2006, under 37 CFR 1.313(c)(2) to withdraw the above-identified application from issue after payment of the issue fee.

The petition is **GRANTED**.

The above-identified application is withdrawn from issue for consideration of a submission under 37 CFR 1.114 (request for continued examination). See 37 CFR 1.313(c)(2).

Petitioner is advised that the issue fee paid on November 13, 2006 in the above-identified application cannot be refunded. If, however, the above-identified application is again allowed, petitioner may request that it be applied towards the issue fee required by the new Notice of Allowance.[1]

The instant petition under 37 CFR 1.313(c)(2), the RCE and the IDS, filed on December 8, 2006, are not signed by an attorney of record. However, in accordance with 37 CFR 1.34(a), the signature of Robert W. Nelson appearing on the correspondence shall constitute a representation to the United States Patent and Trademark Office that he is authorized to represent the particular party in whose behalf he act. However, if Mr. Nelson desires to receive correspondence regarding this file, the appropriate power of attorney documentation must be

---

[1] The request to apply the issue fee to the new Notice may be satisfied by completing and returning the new Issue Fee Transmittal Form PTOL-85(b), which includes the following language thereon: "Commissioner for Patents is requested to apply the Issue Fee and Publication Fee (if any) or re-apply any previously paid issue fee to the application identified above." Petitioner is advised that, whether a fee is indicated as being due or not, the issue Fee Transmittal Form **must** be completed and timely submitted to avoid abandonment. Note the language in bold text on the first page of the Notice of Allowance and Fee(s) Due (PTOL-85).

submitted. A courtesy copy of this decision is being mailed to Mr. Nelson, the petitioner herein. Until otherwise instructed, all future correspondence regarding this application file will be directed solely to the above-noted correspondence address of record.

Telephone inquiries should be directed to the undersigned at (571) 272-3208.

This matter is being referred to Technology Center Art Unit 2817 for processing of the request for continued examination under 37 CFR 1.114 filed December 8, 2006.

Karen Creasy

Karen Creasy
Petitions Examiner
Office of Petitions

cc:
KLAAS, LAW O'MEARA & MALKIN
1999 BROADWAY, SUITE 2225
DENVER, CO 80202

UNITED STATES PATENT AND TRADEMARK OFFICE

Commissioner for Patents
United States Patent and Trademark Office
P.O. Box 1450
Alexandria, VA 22313-1450
www.uspto.gov

BIRCH STEWART KOLASCH & BIRCH
PO BOX 747
FALLS CHURCH, VA 22040-0747

COPY MAILED
JAN 22 2008
OFFICE OF PETITIONS

COPY MAILED
JAN 22 2008
OFFICE OF PETITIONS

In re Application of Itoh et al. :
Application No. 10/977,401 :
Filing Date: November 1, 2004 :
Attorney Docket No. 0033-0961PUS1 :

Decision on Petition

This is a decision on the petition under 37 CFR 1.137(b), filed September 25, 2007, to revive the above-identified application. The petition is also being treated under 37 CFR 1.181 (no fee) as a petition to withdraw the holding of abandonment.

The petition under 37 CFR 1.181 is **granted**.

The petition under 37 CFR 1.137(b) is **dismissed as moot**.

Facts:

A Notice of Allowance was mailed April 26, 2007. The Notice set a statutory period for reply of three (3) months.

A reply in the form of a fee transmittal sheet (PTOL-85(b)) was filed July 12, 2007. The reply did not include payment of the issue fee and publication by check. The fee transmittal sheet did not indicate the issue fee and publication fee should be charged to a deposit account or list a deposit account number.

A Notice of Abandonment was mailed August 23, 2007.

The instant petition was filed September 25, 2007.

Discussion:

Prior to considering a petition under 37 CFR 1.137, the Office has the discretion to first consider the petition as a petition under 37 CFR 1.181 to withdraw the holding of abandonment.

The petition filed September 25, 2007, will initially be treated as a petition under 37 CFR 1.181.

A review of the facts indicates the holding of abandonment should be withdrawn.

37 CFR 1.311(b) states in part,

> The submission of either of the following after the mailing of a notice of allowance will operate as a request to charge the correct issue fee or any publication fee due to any deposit account identified in a previously filed authorization to charge such fees:
> (1) An incorrect issue fee or publication fee; or
> (2) A fee transmittal form (or letter) for payment of issue fee or publication fee.

Petitioner submitted the fee transmittal form for payment of the issue fee and publication fee. On March 23, 2007, petitioner submitted an authorization to charge fees to deposit account no. 02-2448.

The issue fee and publication fee should have been charged to petitioner's deposit account in response to the receipt of the issue fee transmittal form on July 12, 2007. Therefore, the Notice of Abandonment is hereby vacated and the holding of abandonment withdrawn.

Since the petition has been granted under 37 CFR 1.181, petitioner's request to have the petition considered under 37 CFR 1.137(b) is dismissed as moot. No petition fee is required for a petition to withdraw holding of abandonment under 37 CFR 1.181. Therefore, the petition fee of $1,500 has been credited back to petitioner's deposit account.

The Office of Data Management will be informed of the instant decision and will issue the application as a patent in due course.

Telephone inquiries regarding this communication should be directed to Petitions Attorney Steven Brantley at (571) 272-3203.

Charles Steven Brantley
Senior Petitions Attorney
Office of Petitions

UNITED STATES PATENT AND TRADEMARK OFFICE

UNITED STATES DEPARTMENT OF COMMERCE
United States Patent and Trademark Office
Address: COMMISSIONER FOR PATENTS
P.O. Box 1450
Alexandria, Virginia 22313-1450
www.uspto.gov

TROP, PRUNER & HU, P.C.
1616 S. VOSS ROAD, SUITE 750
HOUSTON, TX 77057-2631

Mail Date: 04/21/2010

Applicant	: Peter Fox	: DECISION ON REQUEST FOR
Patent Number	: 7658704	: RECALCULATION of PATENT
Issue Date	: 02/09/2010	: TERM ADJUSTMENT IN VIEW
Appliction No	: 10/977,405	: OF WYETH AND NOTICE OF INTENT TO
Filed	: 10/29/2004	: ISSUE CERTIFICATE OF CORRECTION
		:

The Request for Recalculation is **GRANTED** to the extent indicated.

The patent term adjustment has been determined to be **1475** days. The USPTO will *sua sponte* issue a certificate of correction reflecting the amount of PTA days determined by the recalculation.

Prior to the issuance of the certificate of correction, the USPTO will afford patentee an opportunity to be heard and request reconsideration. Accordingly, patentee has **one month or thirty (30) days**, whichever is longer, to file a request for reconsideration of this patent term adjustment calculation. See 35 U.S.C. 154(b)(3)(B)(ii) and 37 CFR 1.322(a)(4). No extensions of time will be granted under 37 CFR 1.136.

Patentee should use document code PET.OP if electronically filing a request for reconsideration of this patent term adjustment calculation. The patentee must also include the information required by 37 CFR 1.705(b)(2) and the fee required by 37 CFR 1.18(e). If patentee does not file a timely request for reconsideration of this patent term adjustment calculation including the information required by 37 CFR 1.705(b)(2) and the fee required by 37 CFR 1.18(e), the USPTO will issue a certificate of correction reflecting the PTA determination noted above.

Patentee should be aware that in order to preserve the right to review in the United States District Court for the District of Columbia of the USPTO patent term adjustment determination, patentee must ensure that he or she also take the steps required under 35 U.S.C. 154(b)(4)(A) in a timely manner. Nothing in the request for recalculation should be construed as providing an alternative time frame for commencing a civil action under 35 U.S.C. 154(b)(4)(A).

Any questions concerning this decision should be directed to the Office of Patent Legal Administration at 571-272-7702.

UNITED STATES PATENT AND TRADEMARK OFFICE

Commissioner for Patents
United States Patent and Trademark Office
P.O. Box 1450
Alexandria, VA 22313-1450
www.uspto.gov

Orum & Roth
53 W. Jackson Blvd.
Chicago, IL 60604

COPY MAILED

FEB 2 2 2007

OFFICE OF PETITIONS

In re Application of	:	
Ewald Botcher	:	
Application No. 10/977,411	:	DECISION ON PETITION
Filed: October 29, 2004	:	TO WITHDRAW
Attorney Docket No. 13995	:	FROM RECORD
	:	

This is a decision on the Request to Withdraw as attorney or agent of record under 37 C.F.R. § 1.36(b), filed July 16, 2006.

The request is **APPROVED**.

A grantable request to withdraw as attorney/agent of record must be signed by every attorney/agent seeking to withdraw or contain a clear indication that one attorney is signing on behalf of another/others. A request to withdraw will not be approved unless at least 30 (thirty) days would remain between the date of approval and the later of the expiration date of a time to file a response or the expiration date of the maximum time period which can be extended under 37 C.F.R. § 1.136(a).

The request was signed by Catherine L. Gemrich.

Catherine L. Gemrich has been withdrawn as attorney or agent of record; all other attorneys remain of record.

The correspondence address of record remains unchanged.

There is no outstanding Office action at this time.

Telephone inquiries concerning this decision should be directed to Terri Williams at 571-272-2991.

T. Williams

Terri Williams
Petitions Examiner
Office of Petitions

UNITED STATES PATENT AND TRADEMARK OFFICE

Commissioner for Patents
United States Patent and Trademark Office
P.O. Box 1450
Alexandria, VA 22313-1450
www.uspto.gov

MAR - 2 2005

SANFORD J. ASMAN
570 VININGTON COURT
DUNWOODY GA 30350

In re Application of	:
Donald P. Dennis et al	:
Serial No.: 10/977,424	: PETITION TO MAKE SPECIAL
Filed: October 29, 2004	:
Attorney Docket No.: 170404-1012	:

This is in response to the petition filed October 29, 2004, to make the above-identified application special under the provisions of 37 CFR 1.102(c), based environmental quality.

Applicant petitions on the basis that the invention will enhance the quality of the environment. M.P.E.P. 708.02, Part V, gives guidance in this matter, as follows:

> The Patent and Trademark Office will accord "special" status to all patent applications for inventions which **materially enhance** the quality of the environment of mankind **by contributing to the restoration or maintenance of the basic life - sustaining natural elements - air, water, and soil.**
>
> All applicants desiring to participate in this program should petition that their applications be accorded "special" status. Such petitions should be accompanied by verified statements under 37 CFR 1.102 by the applicant or assignee or statements by an attorney/agent registered to practice before the PTO ** explaining how the inventions contribute to the restoration or maintenance of one of these life - sustaining elements. No fee is required for such a petition, 37 CFR 1.102(c).

Applicant's claims are directed to a mold suppressing and/or killing composition made of extracts of natural substances. The composition is claimed to be environmentally safe in that it does not contaminate ground water. The guidance highlighted above indicates that the application must contribute to the **restoration or maintenance** of air, soil or water. In the sense that the composition is used for treating air or surface mold contamination, it can be considered to contribute to the maintenance of the environment.

Applicant's petition is **GRANTED**.

The application will be forwarded to an examiner for further consideration.

Should there be any questions with regard to this letter please contact William R. Dixon, Jr. by letter addressed to the Director, Technology Center 1600, PO BOX 1450, ALEXANDRIA, VA 22313-1450, or by telephone at 571-272-0519 or by facsimile transmission to the general Office facsimile number, 571-273-8300.

William R. Dixon, Jr.
Special Program Examiner
Technology Center 1600

UNITED STATES PATENT AND TRADEMARK OFFICE

Commissioner for Patents
United States Patent and Trademark Office
P.O. Box 1450
Alexandria, VA 22313-1450
www.uspto.gov

R. SCOTT RHOADES
WINSTEAD, SECHREST & MINICK P.C.
PO BOX 50784
DALLAS TX 75201

COPY MAILED

AUG 1 0 2006

OFFICE OF PETITIONS

In re Application of	:	
Norman	:	
Application No. 10/977,427	:	DECISION ON PETITION
Filed: October 29, 2004	:	TO WITHDRAW
Attorney Docket No. 42977-P001US	:	FROM RECORD
	:	

This is a decision on the Request to Withdraw as attorney or agent of record under 37 C.F.R. § 1.36(b), filed March 13, 2006.

The request is **APPROVED**.

A grantable request to withdraw as attorney/agent of record must be signed by every attorney/agent seeking to withdraw or contain a clear indication that one attorney is signing on behalf of another/others. A request to withdraw will not be approved unless at least 30 (thirty) days would remain between the date of approval and the later of the expiration date of a time to file a response or the expiration date of the maximum time period which can be extended under 37 C.F.R. § 1.136(a).

The request was signed by Ross Spencer Garsson on behalf of all attorneys of record.

Applicant is reminded that there is no attorney of record at this time.

All future correspondence will be directed to the first named inventor James T. Norman at the address indicated below.

The request to change the correspondence of record is not acceptable as the requested correspondence address is not that of: (1) the first named signing inventor; or (2) an intervening assignee of the entire interest under 37 C.F.R 3.71. All future communications from the Office will be directed to the first named signing inventor at the first copied address below until otherwise properly notified by the applicant.

Telephone inquiries concerning this decision should be directed to April Wise at 571-272-1642.

Denise Pothier
Petitions Examiner
Office of Petitions

cc: James T. Norman
1601 Graham Drive
Tyler, TX 75701

cc: Jay D. Crutcher
Sheef & Stone, LLP
5956 Sherry Lane
Suite 1400
Dallas, TX 75225

UNITED STATES PATENT AND TRADEMARK OFFICE

IFW DAC

Commissioner for Patents
United States Patent and Trademark Office
P.O. Box 1450
Alexandria, VA 22313-1450
www.uspto.gov

OIPE IAP86
AUG 21 2006
PATENT & TRADEMARK OFFICE

R. SCOTT RHOADES
WINSTEAD, SECHREST & MINICK P.C.
PO BOX 50784
DALLAS TX 75201

COPY MAILED

AUG 10 2006

OFFICE OF PETITIONS

In re Application of	:	
Norman	:	
Application No. 10/977,427	:	DECISION ON PETITION
Filed: October 29, 2004	:	TO WITHDRAW
Attorney Docket No. 42977-P001US	:	FROM RECORD
	:	

This is a decision on the Request to Withdraw as attorney or agent of record under 37 C.F.R. § 1.36(b), filed March 13, 2006.

The request is **APPROVED**.

A grantable request to withdraw as attorney/agent of record must be signed by every attorney/agent seeking to withdraw or contain a clear indication that one attorney is signing on behalf of another/others. A request to withdraw will not be approved unless at least 30 (thirty) days would remain between the date of approval and the later of the expiration date of a time to file a response or the expiration date of the maximum time period which can be extended under 37 C.F.R. § 1.136(a).

The request was signed by Ross Spencer Garsson on behalf of all attorneys of record.

Applicant is reminded that there is no attorney of record at this time.

All future correspondence will be directed to the first named inventor James T. Norman at the address indicated below.

The request to change the correspondence of record is not acceptable as the requested correspondence address is not that of: (1) the first named signing inventor; or (2) an intervening assignee of the entire interest under 37 C.F.R 3.71. All future communications from the Office will be directed to the first named signing inventor at the first copied address below until otherwise properly notified by the applicant.

Telephone inquiries concerning this decision should be directed to April Wise at 571-272-1642.

Denise Pothier
Petitions Examiner
Office of Petitions

cc: James T. Norman
1601 Graham Drive
Tyler, TX 75701

cc: Jay D. Crutcher
Sheef & Stone, LLP
5956 Sherry Lane
Suite 1400
Dallas, TX 75225

UNITED STATES PATENT AND TRADEMARK OFFICE

Commissioner for Patents
United States Patent and Trademark Office
P.O. Box 1450
Alexandria, VA 22313-1450
www.uspto.gov

COPY MAILED
NOV 06 2008

THOMAS, KAYDEN, HORSTEMEYER & RISLEY, L.L.P.
600 Galleria Parkway, Suite 1500
ATLANTA, GA 30339-5948

In re Application of	:	
Menzo Wentink	:	
Application No. 10/977,470	:	DECISION ON PETITION
Filed: November 1, 2004	:	UNDER 37 CFR 1.78(a)(6)
Attorney Docket No. 060706-1840	:	

This is a decision on the petition under 37 CFR 1.78(a)(6), filed September 9, 2008, to accept an unintentionally delayed claim under 35 U.S.C. § 119(e) for the benefit of priority to a prior-filed provisional application.

The petition is **DISMISSED.**

A petition under 37 CFR 1.78(a)(6) is only applicable to those applications filed on or after November 29, 2000. Further, the petition is appropriate only after expiration of the period specified in 37 CFR 1.78(a)(5)(ii) and must be filed during the pendency of the nonprovisional application. In addition, the petition must be accompanied by:

(1) the reference required by 35 U.S.C. § 119(e) and 37 CFR 1.78(a)(5)(i) to the prior-filed application, unless previously submitted;
(2) the surcharge set forth in § 1.17(t); and
(3) a statement that the entire delay between the date the claim was due under 37 CFR 1.78(a)(5)(ii) and the date the claim was filed was unintentional. The Director may require additional information where there is a question whether the delay was unintentional.

The petition fails to comply with item (1) above.

The specification filed on September 9, 2008 does not clearly set forth which application claims the benefit of provisional Application No. 60/388,569 filed on June 12, 2002. In this regard, petitioner states that the instant application claims the benefit of provisional Application No. 60/388,569. However, Application No. 10/977,470 was filed more than one year of provisional Application No. 60/388,569. If there is an intermediate application that was filed within one year of provisional Application No. 60/388,569, then a substitute specification should be filed to include such information. Therefore, petitioner must correct the specification or supply an application data sheet that clearly depicts the benefit claim of provisional application No. 60/388,569.

Accordingly, before the petition under 37 CFR 1.78(a)(6) can be granted, a renewed petition under 37 CFR 1.78(a)(6) and either an Application Data Sheet or a substitute amendment that clearly sets forth the benefit claim, is required.

Further correspondence with respect to this matter should be addressed as follows:

By mail:	Mail Stop PETITIONS Commissioner for Patents Post Office Box 1450 Alexandria, VA 22313-1450
By hand:	Customer Service Window Mail Stop Petitions Randolph Building 401 Dulany Street Alexandria, VA 22314
By fax:	(571) 273-8300 ATTN: Office of Petitions

Any questions concerning this matter may be directed to the undersigned at (571) 272-3226.

Andrea Smith
Petitions Examiner
Office of Petitions

UNITED STATES PATENT AND TRADEMARK OFFICE

Commissioner for Patents
United States Patent and Trademark Office
P.O. Box 1450
Alexandria, VA 22313-1450
www.uspto.gov

MAILED

FEB 26 2010

OFFICE OF PETITIONS

MCDONNELL BOEHNEN HULBERT & BERGHOFF, LLP
300 S. WACKER DRIVE
32ND FLOOR
CHICAGO, IL 60606

In re Application of	:	
Menzo Wentink	:	
Application No. 10/977,470	:	DECISION ON PETITION
Filed: November 1, 2004	:	UNDER 37 CFR 1.78(a)(6)
Attorney Docket No. 08-1408-US-CON2	:	

This is a decision on the petition under 37 CFR 1.78(a)(6), filed May 20, 2009, to accept an unintentionally delayed claim under 35 U.S.C. §119(e) for the benefit of the prior-filed provisional application set forth in the concurrently filed amendment.

In response to the decision mailed November 6, 2008, petitioner submits the present renewed petition along with an amendment.

The renewed petition is **DISMISSED**.

A petition under 37 CFR 1.78(a)(6) is only applicable to those applications filed on or after November 29, 2000. Further, the petition is appropriate only after expiration of the period specified in 37 CFR 1.78(a)(5)(ii) and must be filed during the pendency of the nonprovisional application. In addition, the petition must be accompanied by:

(1) the reference required by 35 U.S.C. § 119(e) and 37 CFR 1.78(a)(5)(i) to the prior-filed application, unless previously submitted;
(2) the surcharge set forth in § 1.17(t); and
(3) a statement that the entire delay between the date the claim was due under 37 CFR 1.78(a)(5)(ii) and the date the claim was filed was unintentional. The Director may require additional information where there is a question whether the delay was unintentional.

The present petition lacks item (1) above.

In the amendment filed on May 20, 2009 petitioner states "This invention also claims the benefit of U.S. Provisional No. 60/388,569 filed June 12, 2002, to which priority is claimed in U.S. Patent Application No. 10/353,391 filed January 29, 2003, now U.S. Patent Number 6,791,962." However, petitioner should note that the parent filing date or effective receipt date cannot precede the child application filing or effective receipt date by more than one year. Therefore, the present petition cannot be granted.

It is noted that petitioner submitted an additional petition fee of $1,410 on May 20, 2009. Since this fee is unnecessary, it will be refunded to petitioner's deposit account.

Accordingly, before the petition under 37 CFR 1.78(a)(6) can be granted, a renewed petition under 37 CFR 1.78(a)(6) and either an Application Data Sheet (ADS) or a substitute amendment (complying with 37 CFR 1.121), which corrects the error above is required (No further fees required).

Further correspondence with respect to this matter should be addressed as follows:

By mail: Mail Stop PETITIONS
Commissioner for Patents
Post Office Box 1450
Alexandria, VA 22313-1450

By hand: Customer Service Window
Mail Stop Petitions
Randolph Building
40l Dulany Street
Alexandria, VA 22314

By fax: (571) 273-8300
ATTN: Office of Petitions

Any questions concerning this matter may be directed to the undersigned at (571) 272-3226.

Andrea Smith
Petitions Examiner
Office of Petitions

UNITED STATES PATENT AND TRADEMARK OFFICE

Commissioner for Patents
United States Patent and Trademark Office
P.O. Box 1450
Alexandria, VA 22313-1450
www.uspto.gov

MCDONNELL BOEHNEN HULBERT & BERGHOFF, LLP
300 S. WACKER DRIVE
32ND FLOOR
CHICAGO, IL 60606

MAILED

MAY 10 2010

OFFICE OF PETITIONS

In re Application of	:	
Menzo Wentink	:	
Application No. 10/977,470	:	DECISION ON PETITION
Filed: November 1, 2004	:	UNDER 37 CFR 1.78(a)(6)
Attorney Docket No. 08-1408-US-CON2	:	

This is a decision on the renewed petition under 37 CFR 1.78(a)(6), filed March 16, 2010, to accept an unintentionally delayed claim under 35 U.S.C. §119(e) for the benefit of the prior-filed provisional application set forth in the concurrently filed amendment.

In response to the decision mailed February 26, 2010, petitioner submits the present renewed petition along with an amendment.

The petition is **GRANTED**.

A petition under 37 CFR 1.78(a)(6) is only applicable to those applications filed on or after November 29, 2000. Further, the petition is appropriate only after expiration of the period specified in 37 CFR 1.78(a)(5)(ii) and must be filed during the pendency of the nonprovisional application. In addition, the petition must be accompanied by:

(1) the reference required by 35 U.S.C. § 119(e) and 37 CFR 1.78(a)(5)(i) to the prior-filed application, unless previously submitted;
(2) the surcharge set forth in § 1.17(t); and
(3) a statement that the entire delay between the date the claim was due under 37 CFR 1.78(a)(5)(ii) and the date the claim was filed was unintentional. The Director may require additional information where there is a question whether the delay was unintentional.

All of the above requirements having been satisfied, the late claim for priority under 35 U.S.C. § 119(e) is accepted as being unintentionally delayed.

The granting of the petition to accept the delayed benefit claim to the prior-filed application under 37 CFR 1.78(a)(6) should not be construed as meaning that this application is entitled to the benefit of the filing date of the prior-filed application. In order for this application to be entitled to the benefit of the prior-filed

application, all other requirements under 35 U.S.C. §119(e) and 37 CFR 1.78(a)(4) and (a)(5) must be met. Similarly, the fact that the corrected Filing Receipt accompanying this decision on petition includes the prior-filed application should not be construed as meaning that applicant is entitled to the claim for benefit of priority to the prior-filed application noted thereon. Accordingly, the examiner will, in due course, consider this benefit claim and determine whether the application is entitled to the benefit of the earlier filing date.

A corrected Filing Receipt, which includes the priority claim to the prior-filed provisional application, is enclosed with this decision.

The application is being forwarded to Technology Center Art Unit 2474 for consideration by the examiner of the claim under 35 U.S.C. §119(e) for the benefit of priority to the prior-filed provisional application.

Any inquiries concerning this decision may be directed to the undersigned at (571) 272-3226. All other inquiries concerning either the examination procedures or status of the application should be directed to the Technology Center.

Andrea Smith
Petitions Examiner
Office of Petitions

Enclosure: Corrected Filing Receipt

UNITED STATES PATENT AND TRADEMARK OFFICE

UNITED STATES DEPARTMENT OF COMMERCE
United States Patent and Trademark Office
Address: COMMISSIONER FOR PATENTS
P.O. Box 1450
Alexandria, Virginia 22313-1450
www.uspto.gov

APPLICATION NUMBER	FILING or 371(c) DATE	GRP ART UNIT	FIL FEE REC'D	ATTY.DOCKET.NO	TOT CLAIMS	IND CLAIMS
10/977,470	11/01/2004	2474	2770	08-1408-US-CON2	37	8

CONFIRMATION NO. 7743

CORRECTED FILING RECEIPT

20306
MCDONNELL BOEHNEN HULBERT & BERGHOFF LLP
300 S. WACKER DRIVE
32ND FLOOR
CHICAGO, IL 60606

OC000000041517624

Date Mailed: 05/07/2010

Receipt is acknowledged of this non-provisional patent application. The application will be taken up for examination in due course. Applicant will be notified as to the results of the examination. Any correspondence concerning the application must include the following identification information: the U.S. APPLICATION NUMBER, FILING DATE, NAME OF APPLICANT, and TITLE OF INVENTION. Fees transmitted by check or draft are subject to collection. Please verify the accuracy of the data presented on this receipt. **If an error is noted on this Filing Receipt, please submit a written request for a Filing Receipt Correction. Please provide a copy of this Filing Receipt with the changes noted thereon. If you received a "Notice to File Missing Parts" for this application, please submit any corrections to this Filing Receipt with your reply to the Notice. When the USPTO processes the reply to the Notice, the USPTO will generate another Filing Receipt incorporating the requested corrections**

Applicant(s)

Menzo Wentink, Utrecht, NETHERLANDS;

Assignment For Published Patent Application

GlobespanVirata, Inc., Red Bank, NJ

Power of Attorney: The patent practitioners associated with Customer Number 20306

Domestic Priority data as claimed by applicant

This application is a CON of 10/880,367 06/30/2004
which is a CIP of 10/353,391 01/29/2003 PAT 6,791,962
which claims benefit of 60/388,569 06/12/2002

Foreign Applications

If Required, Foreign Filing License Granted: 01/13/2005

The country code and number of your priority application, to be used for filing abroad under the Paris Convention, is **US 10/977,470**

Projected Publication Date: Not Applicable

Non-Publication Request: No

Early Publication Request: No

Title

AUTOMATIC PEER DISCOVERY

Preliminary Class

370

PROTECTING YOUR INVENTION OUTSIDE THE UNITED STATES

Since the rights granted by a U.S. patent extend only throughout the territory of the United States and have no effect in a foreign country, an inventor who wishes patent protection in another country must apply for a patent in a specific country or in regional patent offices. Applicants may wish to consider the filing of an international application under the Patent Cooperation Treaty (PCT). An international (PCT) application generally has the same effect as a regular national patent application in each PCT-member country. The PCT process **simplifies** the filing of patent applications on the same invention in member countries, but **does not result** in a grant of "an international patent" and does not eliminate the need of applicants to file additional documents and fees in countries where patent protection is desired.

Almost every country has its own patent law, and a person desiring a patent in a particular country must make an application for patent in that country in accordance with its particular laws. Since the laws of many countries differ in various respects from the patent law of the United States, applicants are advised to seek guidance from specific foreign countries to ensure that patent rights are not lost prematurely.

Applicants also are advised that in the case of inventions made in the United States, the Director of the USPTO must issue a license before applicants can apply for a patent in a foreign country. The filing of a U.S. patent application serves as a request for a foreign filing license. The application's filing receipt contains further information and guidance as to the status of applicant's license for foreign filing.

Applicants may wish to consult the USPTO booklet, "General Information Concerning Patents" (specifically, the section entitled "Treaties and Foreign Patents") for more information on timeframes and deadlines for filing foreign patent applications. The guide is available either by contacting the USPTO Contact Center at 800-786-9199, or it can be viewed on the USPTO website at http://www.uspto.gov/web/offices/pac/doc/general/index.html.

For information on preventing theft of your intellectual property (patents, trademarks and copyrights), you may wish to consult the U.S. Government website, http://www.stopfakes.gov. Part of a Department of Commerce initiative, this website includes self-help "toolkits" giving innovators guidance on how to protect intellectual property in specific countries such as China, Korea and Mexico. For questions regarding patent enforcement issues, applicants may call the U.S. Government hotline at 1-866-999-HALT (1-866-999-4158).

LICENSE FOR FOREIGN FILING UNDER

Title 35, United States Code, Section 184

Title 37, Code of Federal Regulations, 5.11 & 5.15

GRANTED

The applicant has been granted a license under 35 U.S.C. 184, if the phrase "IF REQUIRED, FOREIGN FILING LICENSE GRANTED" followed by a date appears on this form. Such licenses are issued in all applications where the conditions for issuance of a license have been met, regardless of whether or not a license may be required as

set forth in 37 CFR 5.15. The scope and limitations of this license are set forth in 37 CFR 5.15(a) unless an earlier license has been issued under 37 CFR 5.15(b). The license is subject to revocation upon written notification. The date indicated is the effective date of the license, unless an earlier license of similar scope has been granted under 37 CFR 5.13 or 5.14.

This license is to be retained by the licensee and may be used at any time on or after the effective date thereof unless it is revoked. This license is automatically transferred to any related applications(s) filed under 37 CFR 1.53(d). This license is not retroactive.

The grant of a license does not in any way lessen the responsibility of a licensee for the security of the subject matter as imposed by any Government contract or the provisions of existing laws relating to espionage and the national security or the export of technical data. Licensees should apprise themselves of current regulations especially with respect to certain countries, of other agencies, particularly the Office of Defense Trade Controls, Department of State (with respect to Arms, Munitions and Implements of War (22 CFR 121-128)); the Bureau of Industry and Security, Department of Commerce (15 CFR parts 730-774); the Office of Foreign AssetsControl, Department of Treasury (31 CFR Parts 500+) and the Department of Energy.

NOT GRANTED

No license under 35 U.S.C. 184 has been granted at this time, if the phrase "IF REQUIRED, FOREIGN FILING LICENSE GRANTED" DOES NOT appear on this form. Applicant may still petition for a license under 37 CFR 5.12, if a license is desired before the expiration of 6 months from the filing date of the application. If 6 months has lapsed from the filing date of this application and the licensee has not received any indication of a secrecy order under 35 U.S.C. 181, the licensee may foreign file the application pursuant to 37 CFR 5.15(b).

SPE RESPONSE FOR CERTIFICATE OF CORRECTION

DATE : 2-7-08

Paper No.: ____

TO SPE OF : ART UNIT 4700

SUBJECT : Request for Certificate of Correction on Patent No.: 7275721 (10/877478)

A response is requested with respect to the accompanying request for a certificate of correction.

Please complete this form and return with file, within 7 days to:
Palm location **7580, Certificates of Correction Branch – South Tower – 9A22**
If response is for an IFW, **return to employee (named below) via PUBSCofC Team in MADRAS.**
With respect to the change(s) requested, correcting Office and/or Applicant's errors, should the patent read as shown in the certificate of correction (COCIN)? No new matter should be introduced, nor should the scope or meaning of the claims be changed.

Assignee A/S/A/P E.J.

Thank You For Your Assistance

Certificates of Correction Branch 124
Tel. No. 703-308-9390 ext. ~~[illegible]~~

The request for issuing the above-identified correction(s) is hereby:
Note your decision on the appropriate box.

- ☐ **Approved** — **All** changes apply.
- ☐ **Approved in Part** — Specify below which changes **do not** apply.
- ☐ **Denied** — State the reasons for denial below.

Comments:

SPE

Art Unit

UNITED STATES PATENT AND TRADEMARK OFFICE

Commissioner for Patents
United States Patent and Trademark Office
P.O. Box 1450
Alexandria, VA 22313-1450
www.uspto.gov

LADAS & PARRY
26 WEST 61 STREET
NEW YORK NY 10023

COPY MAILED

APR 30 2008

OFFICE OF PETITIONS

In re Patent No. 7,275,721	:	
Issue Date: October 2, 2007	:	
Application No. 10/977,478	:	DECISION ON PETITION
Filed: October 29, 2004	:	
Attorney Docket No. U 015439-6	:	

This is a decision on the "PETITION UNDER 37 CFR § 1.183 TO CORRECT ASSIGNEE INFORMATION", filed August 28, 2007, and October 24, 2007.

The petition is **GRANTED.**

An application may issue in the name of an assignee rather than the applicant if requested prior to issuance of a patent.[1] However, in the event the request is not made prior to issuance, a Certificate of Correction under 37 CFR 1.323 may be requested. A request for a Certificate of Correction under 37 CFR 1.323 to correct the assignee's name will not be granted unless a petition under 37 CFR 3.81(b) is granted. Such request under 37 CFR 3.81(b) should include:

(A) the processing fee required by 37 CFR 1.17(i);

(B) a request for issuance of the application in the name of the assignee, or a request that a patent be corrected to state the name of the assignee;

(C) a statement that the assignment was submitted for recordation as set forth in 37 CFR 3.11 before issuance of the patent; and

[1] See 37 CFR 3.81.

(D) a request for a certificate of correction under 37 CFR 1.323 accompanied by the fee set forth in 37 CFR 1.20(a).[2]

Receipt of the $130 processing fee set forth in 37 CFR 1.17(i) and the fee for the Certificate of Correction is acknowledged.

While petitioner has not met requirement (C) above by including an explicit statement, a review of the file indicates that the assignment was recorded before issuance of the patent.

The file is being forwarded to the Certificate of Corrections Branch for issuance of the requested Certificate of Correction.

Telephone inquiries related to this decision should be directed to the undersigned at (571)272-3207.

Cliff Congo
Petitions Attorney
Office of Petitions

[2] MPEP 307.

SPE RESPONSE FOR CERTIFICATE OF CORRECTION

DATE : 11-13-07 **Paper No.:** _____

TO SPE OF : ART UNIT 4700

SUBJECT : Request for Certificate of Correction for Appl. No. 7275721 B2 (10/977479)

Please respond to this request for a certificate of correction within 7 days.

Please review the requested changes/corrections as shown in the **COCIN** document(s) in the IFW application image. No new matter should be introduced, nor should the scope or meaning of the claims be changed.

Please complete the response (see below) and forward the completed response to scanning using document code **COCX**.

Please response A/S/A/P

Eva James
Certificates of Correction Branch
703-308-9390 ext. 116

Thank You For Your Assistance

The request for issuing the above-identified correction(s) is hereby:
Note your decision on the appropriate box.

- ☐ **Approved** — **All** changes apply.
- ☐ **Approved in Part** — Specify below which changes **do not** apply.
- ☐ **Denied** — State the reasons for denial below.

Comments: _____

_____ **SPE** _____ **Art Unit**

UNITED STATES PATENT AND TRADEMARK OFFICE

Commissioner for Patents
United States Patent and Trademark Office
P.O. Box 1450
Alexandria, VA 22313-1450
www.uspto.gov

WILMER CUTLER PICKERING
HALE AND DORR LLP
60 STATE STREET
BOSTON, MA 02109

COPY MAILED

JAN 0 5 2006

OFFICE OF PETITIONS

In re Application of :
Leonard M. Kawell et al :
Application No. 10/977,480 : ON PETITION
Filed: October 29, 2004 :
Attorney Docket No. 113120-123

This is a decision on the petition, filed December 30, 2005 under 37 CFR 1.313(c)(2) to withdraw the above-identified application from issue after payment of the issue fee.

The petition is **GRANTED**.

The above-identified application is withdrawn from issue for consideration of a submission under 37 CFR 1.114 (request for continued examination). See 37 CFR 1.313(c)(2).

Petitioner is advised that the issue fee paid on November 23, 2005 in the above-identified application cannot be refunded. If, however, the above-identified application is again allowed, petitioner may request that it be applied towards the issue fee required by the new Notice of Allowance.[1]

Telephone inquiries should be directed to Irvin Dingle at (571) 272-3210.

This matter is being referred to Technology Center AU 2673 for processing of the request for continued examination under 37 CFR 1.114 and for consideration of the concurrently filed Information Disclosure Statement.

Irvin Dingle
Petitions Examiner
Office of Petitions

---

[1] The request to apply the issue fee to the new Notice may be satisfied by completing and returning the new Issue Fee Transmittal Form PTOL-85(b), which includes the following language thereon: Commissioner for Patents is requested to apply the Issue Fee and Publication Fee (if any) or re-apply any previously paid issue fee to the application identified above. Petitioner is advised that, whether a fee is indicated as being due or not, the Issue Fee Transmittal Form **must** be completed and timely submitted to avoid abandonment. Note the language in bold text on the first page of the Notice of Allowance and Fee(s) Due (PTOL-85).

UNITED STATES PATENT AND TRADEMARK OFFICE

COMMISSIONER FOR PATENTS
UNITED STATES PATENT AND TRADEMARK OFFICE
P.O. BOX 1450
ALEXANDRIA, VA 22313-1450
www.uspto.gov

FISH & RICHARDSON P.C.
P.O. BOX 1022
MINNEAPOLIS MN 55440-1022

COPY MAILED
MAY 3 1 2006
OFFICE OF PETITIONS

Applicant: Bailey et al.
Appl. No.: 10/977,497
Filing Date: November 1, 2004
Title: REPORTING OF ABNORMAL COMPUTER RESOURCE UTILIZATION DATA
Attorney Docket No.: 14012-063001
Pub. No.: US 2005/0120111 A1
Pub. Date: June 2, 2005

This is a decision on the request for a corrected patent application publication under 37 CFR 1.221(b), received on August 1, 2005, for the above-identified application.

The request is granted.

The corrected patent application publication will be published in due course, unless the patent issues before the application is republished.

Inquiries relating to this matter may be directed to Mark O. Polutta at (571) 272-7709 (voice).

Mark O. Polutta
Office of Patent Legal Administration
Office of the Deputy Commissioner
for Patent Examination Policy

UNITED STATES PATENT AND TRADEMARK OFFICE

Commissioner for Patents
United States Patent and Trademark Office
P.O. Box 1450
Alexandria, VA 22313-1450
www.uspto.gov

Davis, Brown, Koehn, Shors & Roberts, P.C.
The Financial Center
Suite 2500
666 Walnut Street
Des Moines IA 50309-3993

COPY MAILED

DEC 22 2005

OFFICE OF PETITIONS

In re Application of
Loran Balvanz
Application No. 10/977,507
Filed: October 29, 2004
Attorney Docket No. 3213360/15940
Title of Invention: METHOD AND APPARATUS FOR PRODUCING DRIED DISTILLERS GRAIN

DECISION ON PETITION

This is a decision on the petition under 37 CFR §1.137(b), filed November 18, 2005, to revive the above-identified application.

This above-identified application became abandoned for failure to file a response to a Notice to File Missing Parts which was mailed on December 10, 2004. The Notice to File Missing Parts set an extendable two (2) month period for reply. No timely request for extension of time was obtained under the provisions of 37 CFR §1.136(a). Accordingly, this application became abandoned on February 11, 2005. A Notice of Abandonment was mailed on September 12, 2005.

The requirements for a grantable petition under 37 CFR §1.137(b) have been met. This petition is hereby **Granted**.

This application is being forwarded to the Office of Initial Patent Examination for further processing of the application.

Telephone inquiries concerning this matter should be directed to the undersigned at (571) 272-3215.

Charlema R. Grant

Charlema R. Grant
Petitions Attorney
Office of Petitions

UNITED STATES PATENT AND TRADEMARK OFFICE

Commissioner for Patents
United States Patent and Trademark Office
P.O. Box 1450
Alexandria, VA 22313-1450
www.uspto.gov

TOWNSEND AND TOWNSEND AND CREW, LLP
TWO EMBARCADERO CENTER
EIGHTH FLOOR
SAN FRANCISCO, CA 94111-3834

COPY MAILED

JAN 2 4 2008

OFFICE OF PETITIONS

In re Application of
Raif TAWAKOL
Application No. 10/977,508
Filed: October 29, 2004
Attorney Docket No. 021880-000110US

DECISION ON PETITION TO WITHDRAW FROM RECORD

This is a decision on the Request to Withdraw as attorney or agent of record under 37 C.F.R. § 1.36(b), filed September 21, 2007.

The request is **DISMISSED** as moot.

A review of the file record indicates that the power of attorney to Townsend and Townsend and Crew, LLP, has been revoked by the assignee of the patent application on December 4, 2007. Accordingly, the request to withdraw under 37 C.F.R. § 1.36(b) is moot.

The correspondence address of record has been changed and the new correspondence address is the address indicated below.

Telephone inquires concerning this decision should be directed to undersigned at 571-272- 6735.

Diane Goodwyn
Petitions Examiner
Office of Petitions

cc: RAIF TAWAKOL
900 W. OLIVE AVE., STE. D
MERCED, CA 95348

UNITED STATES PATENT AND TRADEMARK OFFICE

UNITED STATES DEPARTMENT OF COMMERCE
United States Patent and Trademark Office
Address: COMMISSIONER FOR PATENTS
P.O. Box 1450
Alexandria, Virginia 22313-1450
www.uspto.gov

TRASKBRITT, P.C.
P.O. BOX 2550
SALT LAKE CITY, UT 84110

Mail Date: 04/20/2010

Applicant	: Johannes Maria Franciscus Aerts	: DECISION ON REQUEST FOR
Patent Number	: 7632654	: RECALCULATION of PATENT
Issue Date	: 12/15/2009	: TERM ADJUSTMENT IN VIEW
Appliction No	: 10/977,509	: OF WYETH AND NOTICE OF INTENT TO
Filed	: 10/29/2004	: ISSUE CERTIFICATE OF CORRECTION
		:

The Request for Recalculation is **GRANTED** to the extent indicated.

The patent term adjustment has been determined to be **65** days. The USPTO will *sua sponte* issue a certificate of correction reflecting the amount of PTA days determined by the recalculation.

Prior to the issuance of the certificate of correction, the USPTO will afford patentee an opportunity to be heard and request reconsideration. Accordingly, patentee has **one month or thirty (30) days**, whichever is longer, to file a request for reconsideration of this patent term adjustment calculation. See 35 U.S.C. 154(b)(3)(B)(ii) and 37 CFR 1.322(a)(4). No extensions of time will be granted under 37 CFR 1.136.

Patentee should use document code PET.OP if electronically filing a request for reconsideration of this patent term adjustment calculation. The patentee must also include the information required by 37 CFR 1.705(b)(2) and the fee required by 37 CFR 1.18(e). If patentee does not file a timely request for reconsideration of this patent term adjustment calculation including the information required by 37 CFR 1.705(b)(2) and the fee required by 37 CFR 1.18(e), the USPTO will issue a certificate of correction reflecting the PTA determination noted above.

Patentee should be aware that in order to preserve the right to review in the United States District Court for the District of Columbia of the USPTO patent term adjustment determination, patentee must ensure that he or she also take the steps required under 35 U.S.C. 154(b)(4)(A) in a timely manner. Nothing in the request for recalculation should be construed as providing an alternative time frame for commencing a civil action under 35 U.S.C. 154(b)(4)(A).

Any questions concerning this decision should be directed to the Office of Patent Legal Administration at 571-272-7702.

UNITED STATES PATENT AND TRADEMARK OFFICE

UNITED STATES DEPARTMENT OF COMMERCE
United States Patent and Trademark Office
Address: COMMISSIONER FOR PATENTS
P.O. Box 1450
Alexandria, Virginia 22313-1450
www.uspto.gov

KENYON & KENYON LLP
ONE BROADWAY
NEW YORK, NY 10004

Mail Date: 04/21/2010

Applicant	: David Devore	: DECISION ON REQUEST FOR
Patent Number	: 7651682	: RECALCULATION of PATENT
Issue Date	: 01/26/2010	: TERM ADJUSTMENT IN VIEW
Appliction No	: 10/977,521	: OF WYETH AND NOTICE OF INTENT TO
Filed	: 10/29/2004	: ISSUE CERTIFICATE OF CORRECTION
		:

The Request for Recalculation is **GRANTED** to the extent indicated.

The patent term adjustment has been determined to be **581** days. The USPTO will *sua sponte* issue a certificate of correction reflecting the amount of PTA days determined by the recalculation.

Prior to the issuance of the certificate of correction, the USPTO will afford patentee an opportunity to be heard and request reconsideration. Accordingly, patentee has **one month or thirty (30) days**, whichever is longer, to file a request for reconsideration of this patent term adjustment calculation. See 35 U.S.C. 154(b)(3)(B)(ii) and 37 CFR 1.322(a)(4). No extensions of time will be granted under 37 CFR 1.136.

Patentee should use document code PET.OP if electronically filing a request for reconsideration of this patent term adjustment calculation. The patentee must also include the information required by 37 CFR 1.705(b)(2) and the fee required by 37 CFR 1.18(e). If patentee does not file a timely request for reconsideration of this patent term adjustment calculation including the information required by 37 CFR 1.705(b)(2) and the fee required by 37 CFR 1.18(e), the USPTO will issue a certificate of correction reflecting the PTA determination noted above.

Patentee should be aware that in order to preserve the right to review in the United States District Court for the District of Columbia of the USPTO patent term adjustment determination, patentee must ensure that he or she also take the steps required under 35 U.S.C. 154(b)(4)(A) in a timely manner. Nothing in the request for recalculation should be construed as providing an alternative time frame for commencing a civil action under 35 U.S.C. 154(b)(4)(A).

Any questions concerning this decision should be directed to the Office of Patent Legal Administration at 571-272-7702.

UNITED STATES PATENT AND TRADEMARK OFFICE

UNITED STATES DEPARTMENT OF COMMERCE
United States Patent and Trademark Office
Address: COMMISSIONER FOR PATENTS
P.O. Box 1450
Alexandria, Virginia 22313-1450
www.uspto.gov

WESTMAN CHAMPLIN & KELLY, P.A.
SUITE 1400
900 SECOND AVENUE SOUTH
MINNEAPOLIS, MN 55402

Mail Date: 04/21/2010

Applicant	: Joe V. Gednalske	: DECISION ON REQUEST FOR
Patent Number	: 7666242	: RECALCULATION of PATENT
Issue Date	: 02/23/2010	: TERM ADJUSTMENT IN VIEW
Appliction No	: 10/977,543	: OF WYETH AND NOTICE OF INTENT TO
Filed	: 10/29/2004	: ISSUE CERTIFICATE OF CORRECTION
		:

The Request for Recalculation is **GRANTED** to the extent indicated.

The patent term adjustment has been determined to be **917** days. The USPTO will *sua sponte* issue a certificate of correction reflecting the amount of PTA days determined by the recalculation.

Prior to the issuance of the certificate of correction, the USPTO will afford patentee an opportunity to be heard and request reconsideration. Accordingly, patentee has **one month or thirty (30) days**, whichever is longer, to file a request for reconsideration of this patent term adjustment calculation. See 35 U.S.C. 154(b)(3)(B)(ii) and 37 CFR 1.322(a)(4). No extensions of time will be granted under 37 CFR 1.136.

Patentee should use document code PET.OP if electronically filing a request for reconsideration of this patent term adjustment calculation. The patentee must also include the information required by 37 CFR 1.705(b)(2) and the fee required by 37 CFR 1.18(e). If patentee does not file a timely request for reconsideration of this patent term adjustment calculation including the information required by 37 CFR 1.705(b)(2) and the fee required by 37 CFR 1.18(e), the USPTO will issue a certificate of correction reflecting the PTA determination noted above.

Patentee should be aware that in order to preserve the right to review in the United States District Court for the District of Columbia of the USPTO patent term adjustment determination, patentee must ensure that he or she also take the steps required under 35 U.S.C. 154(b)(4)(A) in a timely manner. Nothing in the request for recalculation should be construed as providing an alternative time frame for commencing a civil action under 35 U.S.C. 154(b)(4)(A).

Any questions concerning this decision should be directed to the Office of Patent Legal Administration at 571-272-7702.

UNITED STATES PATENT AND TRADEMARK OFFICE

UNITED STATES DEPARTMENT OF COMMERCE
United States Patent and Trademark Office
Address: COMMISSIONER FOR PATENTS
P.O. Box 1450
Alexandria, Virginia 22313-1450
www.uspto.gov

WESTMAN CHAMPLIN & KELLY, P.A.
SUITE 1400
900 SECOND AVENUE SOUTH
MINNEAPOLIS, MN 55402

Mail Date: 05/18/2010

Applicant : Joe V. Gednalske
Patent Number : 7666242
Issue Date : 02/23/2010
Application No : 10/977,543
Filed : 10/29/2004

: NOTICE CONCERNING IMPROPER
: CALCULATION OF PATENT TERM
: ADJUSTMENT BASED UPON USPTO
: IMPROPERLY MEASURING REDUCTION
: PERIOD UNDER 37 CFR 1.704(c)(10).

The United States Patent and Trademark Office (USPTO) discovered that in processing the recent recalculation decisions mailed in response to patentee's filed Request for Recalculation of Patent Term Adjustment in view of Wyeth, the USPTO improperly measured the reduction period for reductions under 37 CFR 1.704(c)(10). Pursuant to 37 CFR 1.704(c)(10), patentee's reduction begins on the date of filing the amendment under 37 CFR 1.312 ("1.312 amendment") or other related paper and ends on the date that the Office mails a response to the filing of the 1.312 amendment or other paper. It has been discovered that during the recalculation, the calculation failed to the limit the reduction to the mail date of the response to the 1.312 amendment or other paper. Accordingly, patentee's reductions were greater than warranted.

This notice **VACATES** the previous GRANTED request for recalculation and provides patentee with a revised GRANTED recalculation.

The patent term adjustment has been determined to be **975** days. The USPTO will *sua sponte* issue a certificate of correction reflecting the amount of patent term adjustment (PTA) days determined by the recalculation.

Prior to the issuance of the certificate of correction, the USPTO will afford patentee an opportunity to be heard and request reconsideration. Accordingly, patentee has **one month or thirty (30) days** from the mail date of this notice, whichever is longer, to file a request for reconsideration of this PTA calculation. See 35 U.S.C. § 154(b)(3)(B)(ii) and 37 CFR 1.322(a)(4).

Patentee should use document code PET.OP if electronically filing a request for reconsideration of this PTA calculation. The patentee must also include the information required by 37 CFR 1.705(b)(2), and the fee required by 37 CFR 1.18(e). If patentee does not file a timely request for reconsideration of this PTA calculation, including the information required by 37 CFR 1.705(b)(2) and the fee required by 37 CFR 1.18(e), the USPTO will issue a certificate of correction reflecting the PTA determination noted above.

Patentee should be aware that in order to preserve the right of review of the USPTO's PTA determination in the United States District Court for the District of Columbia, patentee must ensure that the steps required under 35 U.S.C. § 154 (b)(4) are taken in a timely manner. Nothing in the request for recalculation should be construed as providing an alternative time frame for commencing a civil action under 35 U.S.C. § 154(b)(4).

UNITED STATES PATENT AND TRADEMARK OFFICE

COMMISSIONER FOR PATENTS
UNITED STATES PATENT AND TRADEMARK OFFICE
P.O. BOX 1450
ALEXANDRIA, VA 22313-1450
www.uspto.gov

Paper No.

WESTERMAN, HATTORI, DANIELS &
ADRIAN, LLP
1250 CONNECTICUT AVENUE, NW
SUITE 700
WASHINGTON DC 20036

COPY MAILED
AUG 29 2006
OFFICE OF PETITIONS

COPY MAILED
AUG 30 2006
OFFICE OF PETITIONS

In re Application of :
Shimi et al. : DECISION ON PETITION
Application No. 10/977,550 :
Filed: November 1, 2004 :
Attorney Docket No. 042822 :

This is a decision on the "PETITION UNDER 37 C.F.R. §1.183 TO CHANGE FILING DATE," filed January 31, 2006. Applicants petition to return the official filing date of the present application from February 15, 2005 to November 1, 2004.

Application papers in the above-identified application were deposited on November 1, 2004. On December 10, 2004, a Notice to File Missing Parts of Application was mailed advising applicants that the application had been accorded a filing date of November 1, 2004; however, the statutory basic filing fee, an oath or declaration were missing and figures 3A-5C described in the specification appeared to have been omitted.

In response, petitioner filed the missing fees, an executed declaration and the omitted figures. No amendment pursuant to § 1.57(a)(1) accompanied this submission. Nor did a petition under § 1.182 to accord a filing date as of the date of filing of the drawings. Nonetheless, the Office changed the filing date of the application to February 15, 2005.

Petitioner indicates that due to a clerical error the drawings were filed in response to the Notice. Moreover, petitioner states that they could have depended on the support in the specification to subsequently add the missing drawings or on 37 C.F.R. § 1.57 or on an incorporation by reference of the priority document. Finally, petitioner requests relief on the

basis that the result of the changing of the filing date extends the time between the filing of the priority document and the filing of the present specification to more than one year and thus, the result is the loss of U.S. patent rights for the application.

37 CFR § 1.182 provides that:

> All situations not specifically provided for in the regulations of this part will be decided in accordance with the merits of each situation by or under the authority of the Director, subject to such other requirements as may be imposed, and such decision will be communicated to the interested parties in writing. Any petition seeking a decision under this section must be accompanied by the petition fee set forth in § 1.17(f).

As petitioner is asking for relief that is not specifically provided for in the regulations (and not waiver of a requirement of the rules), this petition is properly considered pursuant to 37 CFR 1.182, not 37 CFR 1.183. Petitioner's argument has been considered, and under the circumstances, found persuasive. Receipt of the petition fee is acknowledged.

In view thereof, the petition under § 1.182 is **GRANTED**.

If applicant wishes to rely on § 1.57(a)(1) to enter the drawing figures, the petitioner must submit an amendment in compliance with §§ 1.57 and 1.121 within TWO (2) MONTHS of the mail date of this decision. This period is not extendable. See 37 CFR 1.181(f), 37 CFR 1.57(f) and MPEP 608.01(p). This amendment will be considered by the examiner in due course.

This application is being returned to the Office of Initial Patent Examination (OIPE) for **correction of the filing date to November 1, 2004**, without figures 3A-5C considered part of the original application disclosure.

Telephone inquiries concerning this matter may be directed to the undersigned at (571) 272-3219.

Nancy Johnson

Nancy Johnson
Senior Petitions Attorney
Office of Petitions

UNITED STATES PATENT AND TRADEMARK OFFICE

UNITED STATES DEPARTMENT OF COMMERCE
United States Patent and Trademark Office
Address: COMMISSIONER FOR PATENTS
P.O. Box 1450
Alexandria, Virginia 22313-1450
www.uspto.gov

APPLICATION NO.	FILING DATE	FIRST NAMED INVENTOR	ATTORNEY DOCKET NO.	CONFIRMATION NO.
10/977,550	11/01/2004	Takeshi Shimi	042822	7700

38834 7590 12/19/2007
WESTERMAN, HATTORI, DANIELS & ADRIAN, LLP
1250 CONNECTICUT AVENUE, NW
SUITE 700
WASHINGTON, DC 20036

EXAMINER
ROBINSON, MARK A

ART UNIT	PAPER NUMBER
2872	

MAIL DATE	DELIVERY MODE
12/19/2007	PAPER

Please find below and/or attached an Office communication concerning this application or proceeding.

The time period for reply, if any, is set in the attached communication.

UNITED STATES PATENT AND TRADEMARK OFFICE

COMMISSIONER FOR PATENTS
UNITED STATES PATENT AND TRADEMARK OFFICE
P.O. BOX 1450
ALEXANDRIA, VA 22313-1450
www.uspto.gov

In re Application of	:	
SHIMI, Takeshi et al.	:	DECISION ON PETITION
Serial No.: 10/977,550	:	UNDER 37 CFR 1.84
Filed: November 01, 2004	:	
For: METHOD OF MEASURING	:	
BIOLOGICAL SAMPLE	:	
WITH HIGH ACCURACY	:	

The request filed on May 18, 2007, for acceptance of color photographs is treated as a Petition under 37 CFR 1.84.

The Petition is GRANTED as applicant has satisfied paragraph (a)(2) and (b)(2) of 37 CFR 1.84 as required.

This application is being forwarded to the examiner for appropriate action consistent with this decision.

Stephone B. Allen
SPE, Art Unit 2872

Westerman, Hattori, Daniels & Adrian, LLP
1250 Connecticut Ave, NW
Suite 700
Washington DC 20036

UNITED STATES PATENT AND TRADEMARK OFFICE

Commissioner for Patents
United States Patent and Trademark Office
P.O. Box 1450
Alexandria, VA 22313-1450
www.uspto.gov

June 17, 2008

John C. McMahon
P. O. Box 30069
Kansas City, MO 64112

Patent No.: 7,294,286 B2
Application No.: 10/977,562
Inventor(s): Leonor Rodriguez Barquero
Issued: November 13, 2007
Title: **COCKTAIL COMPOSITION FOR LIQUID SCINTILLATION MEASUREMENTS**

Re: Request for Certificate of Correction

Consideration has been given your request for the issuance of a certificate of correction for the above-identified patent under the provisions of Rule(s) 1.322 and/or 1.323.

Assignees' names and addresses (assignment data) printed in a patent, are based *solely* on information supplied in the appropriate space for identifying the assignment data, i.e., item 3 of the Issue Fee Transmittal Form PTOL-85B. Granting of a request under 37 CFR 3.81(b) is required to correct applicant's error providing ***incorrect or erroneous*** assignment data, *before* issuance of a Certificate of Correction, under 37 CFR 1.323 *(see Manual of Patent Examining Procedures (M.P.E.P) Chp.1400, sect. 1481).* This procedure is required *at any time after the issue fee is paid*, including after issuance of the patent.

In view of the foregoing, your request, in this matter, is hereby denied.

A request to correct the Assignee under 37 CFR 3.81(b) should include:

A. **the processing fee set forth in 37 CFR 1.117(h) (currently $130);**
B. a statement that the failure to include the correct assignee name on the PTOL-85B was inadvertent; and
C. a copy of the Notice of Recordation of Assignment Document, reflecting the reel and frame number where the assignment(s) is recorded and/or reflecting proof of *the date* the assignment was submitted for recordation.

In the Request, Applicant(s) may request that the file be forwarded to Certificates of Correction Branch, for issuance of a Certificate of Correction, if the Request is granted.

Any request under 37 CFR 3.81(b) should be directed to the following address or facsimile number:

By mail:	Mail Stop PETITIONS Commissioner for Patents Post Office Box 1450 Alexandria, VA 22313-1450
By hand:	Customer Service Window Mail Stop Petitions Randolph Building 401 Dulany Street Alexandria, VA 22314
By fax:	(571) 273-0025 ATTN: Office of Petitions

If a fee (currently $100) was previously submitted for consideration of a Request for Certificate of Correction, under CFR 1.323, to correct assignment data, no additional fee is required.

Virginia Tolbert
For Mary Diggs, Supervisor
Decisions & Certificate of Correction Branch
(703) 305-8309 or (703) **308-9390 ext 113**

vt

UNITED STATES PATENT AND TRADEMARK OFFICE

COMMISSIONER FOR PATENTS
UNITED STATES PATENT AND TRADEMARK OFFICE
P.O. BOX 1450
ALEXANDRIA, VA 22313-1450
www.uspto.gov

BLACKWELL SANDERS PEPER MARTIN LLP
720 OLIVE STREET, SUITE 2400
ST. LOUIS, MO 63101

COPY MAILED
AUG 15 2007
OFFICE OF PETITIONS

Applicant: Lester D. Wise
Appl. No.: 10/977,567
Filing Date: October 29, 2004
Title: BASKET CADDY FOR A STEP LADDER
Attorney Docket No.: 55178.2
Pub. No.: US 2006/0102424 A1
Pub. Date: May 18, 2006

This is a decision on the request for a corrected patent application publication under 37 CFR 1.221(b), received on June 27, 2006, for the above-identified application

The request is DISMISSED.

Applicant requests that the application be republished because the patent application publication contains material errors in the abstract, and paragraphs 6, 8, 21 and 38, wherein the phrase "u-shaped" was misprinted as "unshaped."

37 CFR 1.221 (b) is applicable "only when the Office makes a material mistake which is apparent from Office records.... Any request for a corrected publication or revised patent application publication other than provided as provided in paragraph (a) of this section must be filed within two months from the date of the patent application publication. This period is not extendable." A material mistake must affect the public's ability to appreciate the technical disclosure of the patent application publication, to determine the scope of the patent application publication, or to determine the scope of the provisional rights that an applicant may seek to enforce upon issuance of a patent. [1]

The errors noted in paragraphs 6, 8, 21, 38 and in the abstract, wherein the phrase "u-shaped" was misprinted as "unshaped is an Office error, but it is not a material Office error under 37 CFR 1.221. The typographical replacement of the "u-shaped" with "unshaped" does not affect the understanding of the application, as the term "u-shaped" is correctly printed throughout the application, abstract and the drawing clearly show 'u-shaped' rather than 'unshaped' elements. The application is clearly understandable to one of ordinary skill in the art reading the application and claims. The mistake does not affect the public's ability to appreciate the technical disclosure of the patent application publication, or determine the scope of the patent

[1] Changes to Implement Eighteen-Month Publication of Patent Applications, 65 FR 57023, 57038 (Sept. 20, 2000), 1239, Off. Gaz. Pat. Office Notices 63, 75 (Oct. 10, 2000) (final rule).

application publication or determine the scope of the provisional rights that an applicant may seek to enforce upon issuance of a patent.

The applicant is advised that a "request for republication of an application previously published" may be filed under 37 CFR 1.221(a). Such a request for republication "must include a copy of the application compliance with the Office's electronic filing system requirements and be accompanied by the publication fee set forth in § 1.18(d) and the processing fee set forth in § 1.17(i)." If the request for republication does not comply with the electronic filing system requirements, the republication will not take place and the publication fee set forth in § 1.18(d) will be refunded. The processing fee will be retained.

Any request for republication under 37 CFR 1.221(a), must be submitted via the EFS system and questions or request for reconsideration of the decision, should be addressed as follows:

By mail to: Mail Stop PGPUB
Commissioner for Patents
P.O. Box 1450
Alexandria, Va. 22313-1450

By facsimile: 571-273-8300

Inquiries relating to this matter may be directed to Mark Polutta at (571) 272-7709.

Mark Polutta
Senior Legal Advisor
Office of Patent Legal Administration
Office of the Deputy Commissioner
for Patent Examination Policy

UNITED STATES PATENT AND TRADEMARK OFFICE

Commissioner for Patents
United States Patent and Trademark Office
P.O. Box 1450
Alexandria, VA 22313-1450
www.uspto.gov

HUSCH BLACKWELL SANDERS LLP
720 OLIVE STREET
SUITE 2400
ST. LOUIS MO 63101

COPY MAILED
SEP 2 6 2008

In re Application of :
WISE, Lester D. :
Application No. 10/977,567 : DECISION ON PETITION
Filed: October 29, 2004 : TO WITHDRAW
Attorney Docket No. **60996.2** : FROM RECORD

This is a decision on the Request to Withdraw as attorney or agent of record under 37 C.F.R. § 1.36(b), filed July 24, 2008.

The request is **APPROVED**.

A grantable request to withdraw as attorney/agent of record must be signed by every attorney/agent seeking to withdraw or contain a clear indication that one attorney is signing on behalf of another/others. The Office requires the practitioner(s) requesting withdrawal to certify that he, she, or they have: (1) given reasonable notice to the client, prior to the expiration of the response period, that the practitioner(s) intends to withdraw from employment; (2) delivered to the client or a duly authorized representative of the client all papers and property (including funds) to which the client is entitled; and (3) notified the client of any responses that may be due and the time frame within which the client must respond, pursuant 37 CFR 10.40(c).

The request was signed by Mark Stallion on behalf of all attorneys of record who are associated with customer No. 27128. All attorneys/agents associated with the Customer Number 27128 have been withdrawn. Applicant is reminded that there is no attorney of record at this time.

All future correspondence will be directed to the first inventor Lester Wise at the address indicated below. There is an outstanding Office action mailed July 07, 2008 that requires a reply from the applicant.

Telephone inquiries concerning this decision should be directed to Tredelle Jackson at 571-272-2783.

Tredelle D. Jackson
Paralegal Specialist
Office of Petitions

cc: **LESTER WISE**
4396 SHARON COPLEY ROAD
MEDINA OH 44258

UNITED STATES PATENT AND TRADEMARK OFFICE

Commissioner for Patents
United States Patent and Trademark Office
P.O. Box 1450
Alexandria, VA 22313-1450
www.uspto.gov

COPY MAILED

MAR 0 2 2007

OFFICE OF PETITIONS

SCHWEGMAN, LUNDBERG, WOESSNER & KLUTH, P.A.
P.O. BOX 2938
MINNEAPOLIS MN 55402

In re Application of :
Robert C. Lineares et al :
Application No. 10/977,568 : ON PETITION
Filed: October 29, 2004 :
Attorney Docket No. 1914.001U12 :

This is a decision on the petition, filed March 2, 2007, under 37 CFR 1.313(c)(2) to withdraw the above-identified application from issue after payment of the issue fee.

The petition is **GRANTED**.

The above-identified application is withdrawn from issue for consideration of a submission under 37 CFR 1.114 (request for continued examination). See 37 CFR 1.313(c)(2).

Petitioner is advised that the issue fee paid on February 1, 2007 in the above-identified application cannot be refunded. If, however, the above-identified application is again allowed, petitioner may request that it be applied towards the issue fee required by the new Notice of Allowance.[1]

Telephone inquiries should be directed to the undersigned at (571) 272-3208.

The examiner of Technology Center AU 1722 will consider the request for continued examination under 37 CFR 1.114.

Karen Creasy
Petitions Examiner
Office of Petitions

---

[1] The request to apply the issue fee to the new Notice may be satisfied by completing and returning the new Issue Fee Transmittal Form PTOL-85(b), which includes the following language thereon: "Commissioner for Patents is requested to apply the Issue Fee and Publication Fee (if any) or re-apply any previously paid issue fee to the application identified above." Petitioner is advised that, whether a fee is indicated as being due or not, the Issue Fee Transmittal Form **must** be completed and timely submitted to avoid abandonment. Note the language in bold text on the first page of the Notice of Allowance and Fee(s) Due (PTOL-85).

UNITED STATES PATENT AND TRADEMARK OFFICE

Commissioner for Patents
United States Patent and Trademark Office
P.O. Box 1450
Alexandria, VA 22313-1450
www.uspto.gov

MERCHANT & GOULD PC
P.O. BOX 2903
MINNEAPOLIS MN 55402-0903

COPY MAILED

APR 2 5 2008

OFFICE OF PETITIONS

In re Application of :
Robert C. LINARES et al :
Application No. 10/977,568 : DECISION ON PETITION
Filed: 10/29/2004 :
Attorney Docket No. (15423.1USC11) :

This is a decision on the petition under the unintentional provisions of 37 CFR 1.137(b), filed 12/10/2007, to revive the above-identified application.

The petition is **GRANTED**.

This application became abandoned for failure to timely pay the issue and publication fees on or before 10/16/2007, as required by the Notice of Allowance and Fee(s) Due, mailed 7/16/2007. Accordingly, the date of abandonment of this application is 10/17/2007.

The petition satisfies the requirements of 37 CFR 1.137(b) in that petitioner has supplied (1) the reply in the form of payment of the issue fee of $720 and the publication fee of $300, (2) the petition fee of $770; and (3) an adequate statement of unintentional delay.

37 CFR 1.137(b)(3) requires a statement that "the entire delay in filing the required reply from the due date for the reply until the filing of a grantable petition pursuant to 37 CFR 1.137(b) was unintentional." Since the statement appearing in the petition varies from the language required by 37 CFR 1.137(b)(3), the statement is being construed as the required statement. Petitioner must notify the Office if this is **not** a correct reading of the statement appearing in the petition.

The file does not indicate a change of address has been submitted, although the address given on the petition differs from the address of record. If appropriate, a change of address should be filed in accordance with MPEP 601.03. A courtesy copy of this decision is being mailed to the address given on the petition; however, the Office will mail all future correspondence solely to the address of record.

The deposit account 19-0743 was charged $720 for the issue fee on 12/10/2007. Since $700 was already paid by check on 2/1/2007, the overpayment of $700 for the issue fee charged on 12/10/2007 is credited to the deposit account 19-0743, as authorized by petitioner.

Telephone inquiries concerning this decision should be directed to Quyen Leung at (571) 272-6051 or, in her absence, the undersigned at (571) 272-7099.

This application is being referred to Publishing Division for processing into a patent.

David A. Bucci
Petitions Examiner
Office of Petitions

cc: SCHWEGMAN, LUNDBERG & WOESSNER, P.A.
P.O. BOX 2938
MINNEAPOLIS, MN 55402

UNITED STATES PATENT AND TRADEMARK OFFICE

Commissioner for Patents
United States Patent and Trademark Office
P.O. Box 1450
Alexandria, VA 22313-1450
www.uspto.gov

COPY MAILED

JUL 17 2007

OFFICE OF PETITIONS

Holland & Knight LLP
101 St. James Avenue
Boston, MA 02116

In re Application of

Yenis Abella Rodriguez et al.
Application No. 10/977,576
Filed: October 29, 2004
Attorney Docket No. 098412-00001

DECISION ON PETITION
TO WITHDRAW
FROM RECORD

This is a decision on the Request to Withdraw as attorney or agent of record under 37 C.F.R. § 1.36(b), filed January 8, 2007.

The request is **APPROVED**.

A grantable request to withdraw as attorney/agent of record must be signed by every attorney/agent seeking to withdraw or contain a clear indication that one attorney is signing on behalf of another/others. A request to withdraw will not be approved unless at least 30 (thirty) days would remain between the date of approval and the later of the expiration date of a time to file a response or the expiration date of the maximum time period which can be extended under 37 C.F.R. § 1.136(a).

The request was signed by Kenneth F. Kozik on behalf of all attorneys of record.

All attorneys/agents have been withdrawn.

Applicant is reminded that there is no attorney of record at this time.

All future correspondence will be directed to the first named inventor Yenis Abella at the address indicated below.

There is not outstanding Office action at this time.

Telephone inquiries concerning this decision should be directed to Terri Williams at 571-272-2991.

Terri Williams

Terri Williams
Petitions Examiner
Office of Petitions

cc: **Yenis Abella Rodriguez**
Migjorn, 29 08759 Vallirana
Barcelona, Spain

UNITED STATES PATENT AND TRADEMARK OFFICE

Commissioner for Patents
United States Patent and Trademark Office
P.O. Box 1450
Alexandria, VA 22313-1450
www.uspto.gov

MEDTRONIC, INC.
710 MEDTRONIC PARKWAY NE
MINNEAPOLIS MN 55432-9924

COPY MAILED

SEP 29 2008

OFFICE OF PETITIONS

In re Application of	:	
Hossick-Schott et al.	:	
Application No. 10/977,584	:	ON PETITION
Filed: October 29, 2004	:	
Attorney Docket No. P-21149.00	:	

This is a decision on the petition under 37 C.F.R. § 1.137(b), filed September 10, 2008, to revive the above-identified application.

The petition is **DISMISSED**.

Any request for reconsideration must be submitted within TWO (2) MONTHS from the mail date of this decision. No further petition fee is required for the request. Extensions of time under 37 CFR 1.136(a) are permitted. The reconsideration request should include a cover letter entitled "Renewed Petition under 37 CFR 1.137(b)." This is **not** a final agency action within the meaning of 5 U.S.C. § 704.

The above-identified application became abandoned for failure to reply in a timely manner to the restriction requirement mailed November 14, 2007, which set a shortened statutory period for reply of one (1) month. No extensions of time under the provisions of 37 CFR 1.136(a) were obtained. Accordingly, the above-identified application became abandoned on December 15, 2007. A Notice of Abandonment was mailed June 11, 2008.

A grantable petition under 37 CFR 1.137(b) must be accompanied by:
(1) the required reply,[1]
(2) the petition fee,
(3) a statement that the entire delay in filing the required reply from the due date for the reply until the filing of a grantable petition pursuant to 37 CFR 1.137(b) was unintentional, and
(4) a terminal disclaimer and fee if the application was filed on or before June 8, 1995 or if the application is a design application.

Where there is a question as to whether either the abandonment or the delay in filing a petition under 37 CFR 1.137 was unintentional, the Commissioner may require additional information.[2]

---

[1] In a nonprovisional application abandoned for failure to prosecute, the required reply may be met by the filing of a continuing application. In an application or patent, abandoned or lapsed for failure to pay the issue fee or any portion thereof, the required reply must be the payment of the issue fee or any outstanding balance thereof.

The instant petition lacks item(s) (1). The instant petition lacked a proper response to the restriction requirement.

Further correspondence with respect to this matter should be addressed as follows:

By mail: Mail Stop PETITIONS
Commissioner for Patents
Post Office Box 1450
Alexandria, VA 22313-1450

By hand: Customer Window located at:

U.S. Patent and Trademark Office
Customer Service Window Randolph Building
401 Dulany Street
Alexandria, VA 22314

By fax: (571) 273-8300
ATTN: Office of Petitions

Any questions concerning this matter may be directed to the undersigned at (571) 272-3206.

Liana Walsh
Petitions Examiner
Office of Petitions

---

[2] See MPEP 711.03(c)(III)(C) and (D).

UNITED STATES PATENT AND TRADEMARK OFFICE

Commissioner for Patents
United States Patent and Trademark Office
P.O. Box 1450
Alexandria, VA 22313-1450
www.uspto.gov

MEDTRONIC, INC.
710 MEDTRONIC PARKWAY NE
MINNEAPOLIS MN 55432-9924

COPY MAILED
NOV 06 2008
OFFICE OF PETITIONS

In re Application of	:	
Hossick-Schott et al.	:	
Application No. 10/977,584	:	ON PETITION
Filed: October 29, 2004	:	
Attorney Docket No. P-21149.00	:	

This is a decision on the renewed petition under 37 C.F.R. § 1.137(b), filed October 29, 2008, to revive the above-identified application.

The petition is **GRANTED**.

The petition satisfies the requirements of 37 CFR 1.137(b) in that petitioner has supplied (1) the reply in the form of an Election, (2) the petition fee (previously submitted on September 10, 2008), and (3) a proper statement of unintentional delay.

Telephone inquiries concerning this decision should be directed to the undersigned at (571) 272-3206.

This matter is being referred to Technology Center AU 1795 for further examination on the merits.

Liana Walsh
Petitions Examiner
Office of Petitions

UNITED STATES PATENT AND TRADEMARK OFFICE

COMMISSIONER FOR PATENTS
UNITED STATES PATENT AND TRADEMARK OFFICE
P.O. BOX 1450
ALEXANDRIA, VA 22313-1450
www.uspto.gov

FEB 16 2005

Charles J. Prescott, P.A.
Suite 115
2033 Wood Street
Sarasota, FL 34237

In re Application of	:	
James A. Patterson	:	
Serial No.: 10/977,595	:	PETITION TO MAKE SPECIAL
Filed: October 29, 2004	:	
Attorney Docket No. P-1915	:	

This is in response to applicant's petition filed on October 29, 2004, to make the above-identified application special under the provisions 37 CFR 1,102(c), based on the age of applicant. No fee is required for this petition.

Applicant has satisfied the provisions set forth in M.P.E.P. 708.02, IV. Therefore the petition is **GRANTED**.

The application will be forwarded to the examiner for action on the merits commensurate with this decision.

Should there by any questions with regard to this letter please contact William Dixon, Jr. by letter addressed to the Director, Technology Center 1600, P.O. Box 1450, ALEXANDRIA, VA 22313-1450, or by telephone at 572-272-0519 or by facsimile transmission to the general Office facsimile number.

William Dixon, Jr.
Special Program Examiner
Technology Center 1600

UNITED STATES PATENT AND TRADEMARK OFFICE

Commissioner for Patents
United States Patent and Trademark Office
P.O. Box 1450
Alexandria, VA 22313-1450
www.uspto.gov

Charles J. Prescott, P.A.
Suite 115
2033 Wood Street
Sarasota FL 34237

COPY MAILED
JAN 11 2008
OFFICE OF PETITIONS

In re Application of	:	
James A. Patterson et al.	:	
Application No. 10/977,595	:	ON PETITION
Filed: October 29, 2004	:	
Attorney Docket No. P-1915	:	

This is a decision on the petition under 37 CFR 1.137(b), filed August 6, 2007, to revive the above-identified application.

The petition is **GRANTED**.

The application became abandoned for failure to reply in a timely manner to the non-final Office action mailed May 11, 2006, which set a shortened statutory period for reply of three (3) months. No extensions of time under the provisions of 37 CFR 1.136(a) was obtained. Accordingly, the application became abandoned on August 14, 2006. The Notice of Abandonment was mailed November 27, 2006.

The petition satisfies the requirements of 37 CFR 1.137(b) in that petitioner has supplied (1) the reply in the form of an amendment; (2) the petition fee of $750; and (3) an adequate statement of unintentional delay.

Telephone inquiries concerning this decision should be directed to Terri Williams at (571) 272-2991.

The application file is being referred to Technology Center AU 1753 for appropriate action on the concurrently filed amendment.

Liana Walsh
Petitions Examiner
Office of Petitions

UNITED STATES PATENT AND TRADEMARK OFFICE

Commissioner for Patents
United States Patent and Trademark Office
P.O. Box 1450
Alexandria, VA 22313-1450
www.uspto.gov

WPAT, PC
INTELLECTUAL PROPERTY ATTORNEYS
7225 BEVERLY ST.
ANNANDALE, VA 22003

COPY MAILED

DEC 03 2009

OFFICE OF PETITIONS

In re Application of	:	
Erik S. Jeng, et al.	:	
Application No. 10/977,603	:	ON PETITION
Filed: October 29, 2004	:	
Attorney Docket No. 18807-076	:	

This is a decision in response to the petition, filed September 22, 2009, under the provisions of 37 CFR 1.181 to withdraw the holding of abandonment. Alternatively, petitioner requests revival under the provisions of 37 CFR 1.137(b).

Petitioner argues that the abandonment should be withdrawn in view of the communication filed October 10, 2008, entitled "Response to Notice of Additional Fee."

A review of the record discloses that a non-final Office action was mailed on April 29, 2008. A response was timely filed on August 26, 2008. However, on October 8, 2008, a Notice Requiring Excess Claims Fees was mailed. On October 10, 2008, applicant submits a response arguing no further reply is required. Thereafter, on June 25, 2009, a Notice of Abandonment was mailed.

The petition under 37 CFR 1.181 is **DISMISSED**.

While the Office attempts to notify applicants of deficiencies in their responses in a manner permitting a timely correction, the Office has no obligation to notify parties of deficiencies in their responses in a manner permitting a timely correction. Petitioner should not have allowed the maximum extendable period for reply to expire while awaiting further action from the Office. It is noted that the examiner explains in the Notice of Abandonment of June 25, 2009, that after consulting with the team leader and supervisory examiner, it was determined that the requirement for the excess claim fee was correct.

37 CFR 1.135 states: "[p]rosecution of an application to save it from abandonment pursuant to paragraph (a) of this section **must include such complete and proper reply as the condition of the application may require**. Emphasis added.

Moreover, 35 U.S.C 133 states: [u]pon failure of the applicant to prosecute the application within six months after any action therein, of which notice has been given or mailed to the applicant, or within such shorter time, not less than thirty days, as fixed by the Director in such action, the

application shall be regarded as abandoned by the parties thereto, unless it be shown to the satisfaction of the Director that such delay was unavoidable.

In the instant application petitioner failed to comply with 35 U.S.C. 133 and 37 CFR 1.135 in that petitioner has failed to include such complete and proper reply as the condition of the application may require., *i.e.,* petitioner has failed to submit the excess claim fee. Accordingly, the application was properly held abandoned and a decision on the petition under 37 CFR 1.137(b) follows.

A grantable petition under 37 CFR 1.137(b) must be accompanied by: (1) the required reply, unless previously filed; (2) the petition fee as set forth in 37 CFR 1.17(m); (3) a statement that the entire delay in filing the required reply from the due date for the reply until the filing of a grantable petition pursuant to 37 CFR 1.137(b) was unintentional; and (4) any terminal disclaimer (and fee as set forth in 37 CFR 1.20(d)) required by 37 CFR 1.137(c). Where there is a question as to whether either the abandonment or the delay in filing a petition under 37 CFR 1.137 was unintentional, the Director may require additional information. See MPEP 711.03(c)(II)(C) and (D).

The petition satisfies the requirements of 37 CFR 1.137(b) in that petitioner has supplied (1) the reply in the form of the excess claim fee of $110; (2) the petition fee of $810; and (3) an adequate statement of unintentional delay.

Accordingly, the petition to revive the application under 37 CFR 1.137(b) is **GRANTED**.

The application file does not indicate a change of address has been filed in this case, although the address given on the petition differs from the address of record. If appropriate, a change of address should be filed in this case in accordance with MPEP 601.03. A courtesy copy of this decision is being mailed to the address noted on the petition. However, until otherwise instructed, all future correspondence regarding this application will be mailed solely to the address of record.

The application is being referred to Technology Center AU 2824 for appropriate action by the Examiner in the normal course of business on the reply received September 22, 2009.

Telephone inquiries concerning this decision should be directed to the undersigned at (571) 272-3204. Inquiries relating to further prosecution should be directed to the Technology Center.

Sherry D. Brinkley
Petitions Examiner
Office of Petitions

cc: JUSTIN KING
1940 DUKE ST., SUITE 200
ALEXANDRIA, VA 22314

UNITED STATES PATENT AND TRADEMARK OFFICE

Commissioner for Patents
United States Patent and Trademark Office
P.O. Box 1450
Alexandria, VA 22313-1450
www.uspto.gov

WARD & OLIVO care of James L. Lynch
382 Springfield Avenue
Summit, NJ 07901

COPY MAILED

MAY 09 2008

In re Application of Rathus et al. :
Application No. 10/977,613 : Decision on Petition
Filing Date: November 1, 2004 :
Attorney Docket No. 660-075 :

This is a decision on the petition under 37 CFR 1.181, filed December 6, 2007, to withdraw the holding of abandonment.

The petition is **granted.**

On March 7, 2007, the Office mailed a non-final Office action. The Office action set a three (3) month shortened statutory period for reply. Accordingly, a reply was due on or before Monday, June 9, 2007, absent payment for an extension of time.

A reply to the non-final Office action was not matched with the file. As a result a Notice of Abandonment was mailed October 3, 2007.

Petitioner asserts that a reply to the non-final Office action was timely filed. In support of the petition, petitioner has submitted a date-stamped postcard receipt, indicating a transmittal form, fee transmittal form, and 18-page Response to Office Action were received by the Office on May 25, 2007.

The original reply filed May 25, 2007, was not matched with the file and cannot be located. However, M.P.E.P. 503 states, "[a] postcard receipt which itemizes and properly identifies the papers which are being filed serves as prima facie evidence of receipt in the PTO of all the items listed thereon on the date stamped thereon by the PTO." Accordingly, it is concluded a reply was timely filed in the Patent and Trademark Office but not matched with the application file.

The Notice of Abandonment is hereby vacated and the holding of abandonment withdrawn.

Technology Center Art Unit 2876 will be informed of the instant decision and the application, including the copy of the amendment filed December 6, 2007, will be further examined in due course.

Telephone inquiries regarding this communication should be directed to Petitions Attorney Steven Brantley at (571) 272-3203.

Charles Steven Brantley
Senior Petitions Attorney
Office of Petitions

UNITED STATES PATENT AND TRADEMARK OFFICE

Commissioner for Patents
United States Patent and Trademark Office
P.O. Box 1450
Alexandria, VA 22313-1450
www.uspto.gov

Friedrich Kueffner
Suite 910
317 Madison Avenue
New York NY 10017

COPY MAILED

MAY 2 3 2008

OFFICE OF PETITIONS

In re Application of :
Schutz :
Application No. 10/977,616 : ON PETITION
Filed: October 27, 2004 :
Attorney Docket No. PR-66 :
For: PALLET-LIKE SUPPORT BASE FOR TRANSPORT AND STORAGE CONTAINERS FOR LIQUIDS

This is a decision on the petition under 37 CFR 1.181, filed January 14, 2008 (certificate of mailing date January 11, 2008), requesting that the Office withdraw the holding of abandonment of the above-identified application.

The petition under 37 CFR 1.181 is **GRANTED**.

This application was held abandoned for failure to respond in a timely manner to the final Office action, mailed January 5, 2007, which set forth an extendable three (3) month period for reply. Applicant filed an amendment after final on April 16, 2007 (certificate of mailing date April 5, 2007). An Advisory action was mailed on May 3, 2007. The Office contended that this application became abandoned on April 6, 2007 for failure to properly reply to the January 5, 2007 final Office action. A Notice of Abandonment was mailed on January 3, 2008.

Petitioner requests withdrawal of the holding of abandonment based on the assertion that a request for a two month extension of time and a Notice of Appeal were timely filed on June 4, 2007 and a request for a four month extension of time and an Appeal Brief were timely filed on December 10, 2007 (certificate of mailing date December 3, 2007). The undersigned finds this argument completely convincing, as these documents are present in the application file and Office financial records show that the required fees were charged. Therefore, all of applicant's filings were timely made.

The petition under 37 CFR 1.181 is **granted**, the holding of abandonment is withdrawn, and the January 3, 2008 Notice of Abandonment is **vacated**. No petition fee has been or will be charged in connection with this matter.

After the mailing of this decision, the application file will be forwarded to Technology Center A.U. 3725 for consideration of the Appeal Brief, filed on December 10, 2007 (certificate of mailing date December 3, 2007).

Telephone inquiries pertaining to this matter may be directed to the undersigned at (571) 272-3230.

Shirene Willis Brantley

Shirene Willis Brantley
Senior Petitions Attorney
Office of Petitions
Office of the Deputy Commissioner
for Patent Examination Policy

UNITED STATES PATENT AND TRADEMARK OFFICE

UNITED STATES DEPARTMENT OF COMMERCE
United States Patent and Trademark Office
Address: COMMISSIONER FOR PATENTS
P.O. Box 1450
Alexandria, Virginia 22313-1450
www.uspto.gov

APPL NO.	FILING OR 371 (c) DATE	ART UNIT	FIL FEE REC'D	ATTY.DOCKET NO	DRAWINGS	TOT CLMS	IND CLMS
10/977,629	10/29/2004	1654	439	21578-019 UTIL	7	18	4

CONFIRMATION NO. 9213

CORRECTED FILING RECEIPT

OC000000015393939

30623
MINTZ, LEVIN, COHN, FERRIS, GLOVSKY
AND POPEO, P.C.
ONE FINANCIAL CENTER
BOSTON, MA 02111

Date Mailed: 03/09/2005

Receipt is acknowledged of this regular Patent Application. It will be considered in its order and you will be notified as to the results of the examination. Be sure to provide the U.S. APPLICATION NUMBER, FILING DATE, NAME OF APPLICANT, and TITLE OF INVENTION when inquiring about this application. Fees transmitted by check or draft are subject to collection. Please verify the accuracy of the data presented on this receipt. **If an error is noted on this Filing Receipt, please write to the Office of Initial Patent Examination's Filing Receipt Corrections, facsimile number 703-746-9195. Please provide a copy of this Filing Receipt with the changes noted thereon. If you received a "Notice to File Missing Parts" for this application, please submit any corrections to this Filing Receipt with your reply to the Notice. When the USPTO processes the reply to the Notice, the USPTO will generate another Filing Receipt incorporating the requested corrections (if appropriate).**

Applicant(s)

Nathan H. Sloane, Germantown, TN;
Kathleen M. Hehir, Grafton, MA;
Alexander Baguisi, Grafton, MA;
Paul DiTullio, Northboro, MA;

Power of Attorney: None

Domestic Priority data as claimed by applicant

This appln claims benefit of 60/547,124 02/24/2004
and claims benefit of 60/515,861 10/30/2003

Foreign Applications

If Required, Foreign Filing License Granted: 02/16/2005

The country code and number of your priority application, to be used for filing abroad under the Paris Convention, is US10/977,629

Projected Publication Date: To Be Determined - pending completion of Missing Parts

Non-Publication Request: No

Early Publication Request: No

**** SMALL ENTITY ****

Title

Anticancer peptide compositions

Preliminary Class

514

LICENSE FOR FOREIGN FILING UNDER
Title 35, United States Code, Section 184
Title 37, Code of Federal Regulations, 5.11 & 5.15

GRANTED

The applicant has been granted a license under 35 U.S.C. 184, if the phrase "IF REQUIRED, FOREIGN FILING LICENSE GRANTED" followed by a date appears on this form. Such licenses are issued in all applications where the conditions for issuance of a license have been met, regardless of whether or not a license may be required as set forth in 37 CFR 5.15. The scope and limitations of this license are set forth in 37 CFR 5.15(a) unless an earlier license has been issued under 37 CFR 5.15(b). The license is subject to revocation upon written notification. The date indicated is the effective date of the license, unless an earlier license of similar scope has been granted under 37 CFR 5.13 or 5.14.

This license is to be retained by the licensee and may be used at any time on or after the effective date thereof unless it is revoked. This license is automatically transferred to any related applications(s) filed under 37 CFR 1.53(d). This license is not retroactive.

The grant of a license does not in any way lessen the responsibility of a licensee for the security of the subject matter as imposed by any Government contract or the provisions of existing laws relating to espionage and the national security or the export of technical data. Licensees should apprise themselves of current regulations especially with respect to certain countries, of other agencies, particularly the Office of Defense Trade Controls, Department of State (with respect to Arms, Munitions and Implements of War (22 CFR 121-128)); the Office of Export Administration, Department of Commerce (15 CFR 370.10 (j)); the Office of Foreign Assets Control, Department of Treasury (31 CFR Parts 500+) and the Department of Energy.

NOT GRANTED

No license under 35 U.S.C. 184 has been granted at this time, if the phrase "IF REQUIRED, FOREIGN FILING LICENSE GRANTED" DOES NOT appear on this form. Applicant may still petition for a license under 37 CFR 5.12, if a license is desired before the expiration of 6 months from the filing date of the application. If 6 months has lapsed from the filing date of this application and the licensee has not received any indication of a secrecy order under 35 U.S.C. 181, the licensee may foreign file the application pursuant to 37 CFR 5.15(b).

UNITED STATES PATENT AND TRADEMARK OFFICE

Commissioner for Patents
United States Patent and Trademark Office
P.O. Box 1450
Alexandria, VA 22313-1450
www.uspto.gov

PHILIP S. JOHNSON
JOHNSON & JOHNSON
ONE JOHNSON & JOHNSON PLAZA
NEW BRUNSWICK NJ 08933-7003

COPY MAILED

FEB 20 2008

OFFICE OF PETITIONS

In re Application of
Chen et al.
Application No. 10/977,633
Filed: October 29, 2004
Attorney Docket No. MCP5039USNP

DECISION ON PETITION

This is a decision on the petition under the unintentional provisions of 37 CFR 1.137(b), filed January 17, 2008, to revive the above-identified application.

The petition is **GRANTED**.

The petition satisfies the requirements of 37 CFR 1.137(b) in that petitioner has supplied (1) the reply in the form of an Amendment, (2) the petition fee, and (3) a proper statement of unintentional delay.

Telephone inquiries concerning this decision should be directed to the undersigned at (571) 272-3206.

This matter is being referred to Technology Center 1618 for further examination on the merits.

Liana Walsh
Petitions Examiner
Office of Petitions

UNITED STATES PATENT AND TRADEMARK OFFICE

Commissioner for Patents
United States Patent and Trademark Office
P.O. Box 1450
Alexandria, VA 22313-1450
www.uspto.gov

PHILIP S. JOHNSON
JOHNSON & JOHNSON
ONE JOHNSON & JOHNSON PLAZA
NEW BRUNSWICK, NJ 08933-7003

COPY MAILED

DEC 2 0 2007

OFFICE OF PETITIONS

In re Application of :
Gail K. Buehler :
Application No. 10/977,655 :
Filed: October 29, 2004 :
Attorney Docket No. MCP 5048 USNP :

ON PETITION

This is a decision on the petition under 37 CFR 1.137(b), filed September 7, 2007, to revive the above-identified application.

The petition is **GRANTED**.

The above-identified application became abandoned for failure to reply in a timely manner to the non-final Office action mailed February 7, 2007, which set a shortened statutory period for reply of three (3) months. No extension of time under the provisions of 37 CFR 1.136(a) were obtained. Accordingly, the above-identified application became abandoned on May 8, 2007.

An extension of time under 37 CFR 1.136 must be filed prior to the expiration of the maximum extendable period for reply. See In re Application of S., 8 USPQ2d 1630, 1631 (Comm'r Pats. 1988). Accordingly, since the $1020 extension of time submitted with the petition on September 7, 2007 was subsequent to the maximum extendable period for reply, this fee is unnecessary and will be credited to petitioner's deposit account.

Telephone inquiries concerning this decision should be directed to Irvin Dingle at (571) 272-3210.

This matter is being referred to Technology Center AU 1615 for further processing.

Irvin Dingle
Petitions Examiner
Office of Petitions

UNITED STATES PATENT AND TRADEMARK OFFICE

Commissioner for Patents
United States Patent and Trademark Office
P.O. Box 1450
Alexandria, VA 22313-1450
www.uspto.gov

JAN 31 2005

In re Application of	:	
SCHARBO ET AL.	:	
Serial Number: 10/977,662	:	PETITION UNDER
Filed: October 29, 20034	:	M.P.E.P.708.02
For: APPARATUS FOR COOKING MEAT	:	

This is in response to the petition filed October 29, 2004, requesting that the above-identified application be granted Special Status under Section 708.02 II of the MPEP and 37 CFR 1.102 **(fee required)**.

The request for Special Status considered under Section 708.02 II has not been granted because a copy of each reference deemed most closely related to the subject matter encompassed by the claims has not been provided.

The petition is **DENIED.**

Richard Crispino, Special Programs Examiner
Technology Center 1700
Chemical and Materials Engineering

Bracewell & Patterson, LLP
IP Docketing
P.O. Box 61389
Houston, TX 77208-1389

UNITED STATES PATENT AND TRADEMARK OFFICE

Commissioner for Patents
United States Patent and Trademark Office
P.O. Box 1450
Alexandria, VA 22313-1450
www.uspto.gov

JUN 1 0 2005

In re Application of
SCHARBO ET AL.
Serial Number: 10/977,662
Filed: October 29, 20034
For: APPARATUS FOR COOKING MEAT

PETITION UNDER
M.P.E.P.708.02

This is in response to the letter, filed February 22, 2005, requesting reconsideration of the January 31, 2005 denial of the petition for special status under section 708.02 II of the MPEP. The petition was denied because copies of the closest prior art had not been provided. The requestor notes the closest prior art was already of record in the parent application and those references have now been made of record in the instant application.

In view of the requestor's comments, the requirements indicated in the MPEP have been met and Special Status under Section 708.02 II is now **granted**.

Richard Crispino, Special Programs Examiner
Technology Center 1700
Chemical and Materials Engineering

Bracewell & Patterson, LLP
IP Docketing
P.O. Box 61389
Houston, TX 77208-1389

SPE RESPONSE FOR CERTIFICATE OF CORRECTION

Paper No.: _____

DATE : March 31, 2008

TO SPE OF : ART UNIT 3672

SUBJECT : Request for Certificate of Correction for Appl. No 10/977671 patent no7306056

Please respond to this request for a certificate of correction within 7 days.

Please review the requested changes/corrections as shown in the **COCIN** document(s) in the IFW application image. No new matter should be introduced, nor should the scope or meaning of the claims be changed.

Please complete the response (see below) and forward the completed response to scanning using document code **COCX**.

Magdalene Talley

Certificates of Correction Branch

703-308-9390 ext. 116

Thank You For Your Assistance

The request for issuing the above-identified correction(s) is hereby:

Note your decision on the appropriate box.

- ☐ **Approved** — **All** changes apply.
- ☒ **Approved in Part** — Specify below which changes **do not** apply.
- ☐ **Denied** — State the reasons for denial below.

Comments: Only the first of the four corrections is approved. The second correction has the wrong line number (should be line 48) The third correction has the word "mil" misspelled should be --mill-- The fourth correction has the word "The" capitalized which is improper

SPE

3672

Art Unit

PTOL-306 (REV. 7/03)

U.S. DEPARTMENT OF COMMERCE Patent and Trademark Office

DAVID BAGNELL
SUPERVISORY PATENT EXAMINER
TECHNOLOGY CENTER 3600

SPE RESPONSE FOR CERTIFICATE OF CORRECTION

Paper No.: _____

DATE : 12/16/2009

TO SPE OF : ART UNIT 3672 (3600)

SUBJECT : Request for Certificate of Correction for Appl. No.: 10/977,471 Patent No.: 7,306,056

Please respond to this request for a certificate of correction within 7 days.

FOR IFW FILES:

Please review the requested changes/corrections as shown in the **COCIN** document(s) in the IFW application image. No new matter should be introduced, nor should the scope or meaning of the claims be changed.

Please complete the response (see below) and forward the completed response to scanning using document code **COCX**.

FOR PAPER FILES:

Please review the requested changes/corrections as shown in the attached certificate of correction. Please complete this form (see below) and forward it with the file to:

Certificates of Correction Branch (CofC)
Randolph Square – 9D10-A
Palm Location 7580

Ernest C. White, LTE
Randolph Sq. Ste 9D62A
703-756-1590

Thank You For Your Assistance

The request for issuing the above-identified correction(s) is hereby:
Note your decision on the appropriate box.

- ☑ **Approved** — **All** changes apply.
- ☐ **Approved in Part** — Specify below which changes **do not** apply.
- ☐ **Denied** — State the reasons for denial below.

Comments: _____

SPE _____ **ART UNIT** 3672

UNITED STATES PATENT AND TRADEMARK OFFICE

Commissioner for Patents
United States Patent and Trademark Office
P.O. Box 1450
Alexandria, VA 22313-1450
www.uspto.gov

MYERS BIGEL SIBLEY & SAJOVEC, P.A
PO BOX 37428
RALEIGH NC 27627

COPY MAILED

OCT 14 2008

OFFICE OF PETITIONS

In re Application of:
MURRAY, Matthew Justin, et al.
Application No.: 10/977,705
Filed: October 29, 2004
Attorney Docket No.: 9314-74

DECISION APPROVING WITHDRAWAL OF ATTORNEY

This is a decision on the Request to Withdraw as Attorney/Agent of Record under 37 CFR § 1.36, filed October 2, 2008.

The Request is **APPROVED**.

Debra K. Stephens requests that she alone be withdrawn as an attorney under 37 CFR § 1.36, pursuant to the reason set forth under 37 CFR § 10.40(b)(2), because of her current employment by the United States Patent and Trademark Office. Since the Request satisfies all of the requirements for withdrawal, it is appropriate to approve the Request and withdraw only Ms. Stephens as an attorney of record.

All future communications from the Office will continue to be directed to the above-identified correspondence address.

A courtesy copy of this decision is being mailed to Ms. Stephens at the address identified in the Request.

Telephone inquiries relating to this decision should be directed Brian W. Brown at (571) 272-5338.

Brian W. Brown
Petitions Examiner
Office of Petitions

Cc: Debra K. Stephens
301 Edgemore Avenue
Cary, NC 27519

UNITED STATES PATENT AND TRADEMARK OFFICE

Commissioner for Patents
United States Patent and Trademark Office
P.O. Box 1450
Alexandria, VA 22313-1450
www.uspto.gov

COPY MAILED

NOV 0 2 2006

OFFICE OF PETITIONS

Haynes and Boone, LLP
901 Main Street, Suite 3100
Dallas, TX 75202

In re Application of

Chris Gay
Application No. 10/977,712
Filed: October 29, 2004
Attorney Docket No. 35044.5

DECISION ON PETITION
TO WITHDRAW
FROM RECORD

This is a decision on the Request to Withdraw as attorney or agent of record under 37 C.F.R. § 1.36(b), filed July 26, 2006.

The request is **APPROVED**.

A grantable request to withdraw as attorney/agent of record must be signed by every attorney/agent seeking to withdraw or contain a clear indication that one attorney is signing on behalf of another/others. A request to withdraw will not be approved unless at least 30 (thirty) days would remain between the date of approval and the later of the expiration date of a time to file a response or the expiration date of the maximum time period which can be extended under 37 C.F.R. § 1.136(a).

The request was signed by David M. O'Dell on behalf of all attorneys of record who are associated with Customer No. 27683.

All attorneys/agents associated with the Customer No. 27683 have been withdrawn.

Applicant is reminded that there is no attorney of record at this time.

The request to change the correspondence of record is not acceptable as the requested correspondence address is not that of: (1) the first named signing inventor; or (2) an intervening assignee of the entire interest under 37 C.F.R 3.71. All future communications from the Office will be directed to the first named signing inventor at the first copied address below until otherwise properly notified by the applicant.

There is no outstanding Office action at this time.

Telephone inquiries concerning this decision should be directed to Terri Williams at 571-272-2991.

Terri Williams
Petitions Examiner
Office of Petitions

cc: **Chris Gay**
9050 Markville Drive
Apt. 831
Dallas, TX 75243

cc: **David G. Woodral**
Howison & Arnott, LLP
Two Lincoln Center
5420 LBJ Freeway
Suite 660
Dallas, TX 75240-2318

UNITED STATES PATENT AND TRADEMARK OFFICE

UNITED STATES DEPARTMENT OF COMMERCE
United States Patent and Trademark Office
Address: COMMISSIONER FOR PATENTS
P.O. Box 1450
Alexandria, Virginia 22313-1450
www.uspto.gov

APPLICATION NUMBER	FILING OR 371 (c) DATE	FIRST NAMED APPLICANT	ATTY. DOCKET NO./TITLE
10/977,712	10/29/2004	Chris Gay	35044.5

CONFIRMATION NO. 1205

OC000000021072308

OC000000021072308

27683
HAYNES AND BOONE, LLP
901 MAIN STREET, SUITE 3100
DALLAS, TX 75202

Date Mailed: 11/02/2006

NOTICE REGARDING CHANGE OF POWER OF ATTORNEY

This is in response to the Power of Attorney filed 07/26/2006.

- The withdrawal as attorney in this application has been accepted. Future correspondence will be mailed to the new address of record. 37 CFR 1.33.

Terri S. Williams

TERRI S WILLIAMS
OP (571) 272-2991

FORMER ATTORNEY/AGENT COPY

UNITED STATES PATENT AND TRADEMARK OFFICE

Commissioner for Patents
United States Patent and Trademark Office
P.O. Box 1450
Alexandria, VA 22313-1450
www.uspto.gov

MYERS BIGEL SIBLEY & SAJOVEC, P.A
PO BOX 37428
RALEIGH NC 27627

COPY MAILED

OCT 14 2008

OFFICE OF PETITIONS

In re Application of:
CAMP, William O., Jr.
Application No.: 10/977,713
Filed: October 29, 2004
Attorney Docket No.: 9314-94

DECISION APPROVING WITHDRAWAL OF ATTORNEY

This is a decision on the Request to Withdraw as Attorney/Agent of Record under 37 CFR § 1.36, filed October 2, 2008.

The Request is **APPROVED**.

Debra K. Stephens requests that she alone be withdrawn as an attorney under 37 CFR § 1.36, pursuant to the reason set forth under 37 CFR § 10.40(b)(2), because of her current employment by the United States Patent and Trademark Office. Since the Request satisfies all of the requirements for withdrawal, it is appropriate to approve the Request and withdraw only Ms. Stephens as an attorney of record.

All future communications from the Office will continue to be directed to the above-identified correspondence address.

A courtesy copy of this decision is being mailed to Ms. Stephens at the address identified in the Request.

Telephone inquiries relating to this decision should be directed Brian W. Brown at (571) 272-5338.

Brian W. Brown
Petitions Examiner
Office of Petitions

Cc: Debra K. Stephens
301 Edgemore Avenue
Cary, NC 27519

UNITED STATES PATENT AND TRADEMARK OFFICE

UNITED STATES DEPARTMENT OF COMMERCE
United States Patent and Trademark Office
Address: COMMISSIONER FOR PATENTS
P.O. Box 1450
Alexandria, Virginia 22313-1450
www.uspto.gov

MYERS BIGEL SIBLEY & SAJOVEC, P.A.
P.O. BOX 37428
RALEIGH, NC 27627

Mail Date: 04/21/2010

Applicant	: William O. Camp JR.	: DECISION ON REQUEST FOR
Patent Number	: 7613314	: RECALCULATION of PATENT
Issue Date	: 11/03/2009	: TERM ADJUSTMENT IN VIEW
Appliction No	: 10/977,713	: OF WYETH AND NOTICE OF INTENT TO
Filed	: 10/29/2004	: ISSUE CERTIFICATE OF CORRECTION
		:

The Request for Recalculation is **GRANTED** to the extent indicated.

The patent term adjustment has been determined to be **1405** days. The USPTO will *sua sponte* issue a certificate of correction reflecting the amount of PTA days determined by the recalculation.

Prior to the issuance of the certificate of correction, the USPTO will afford patentee an opportunity to be heard and request reconsideration. Accordingly, patentee has **one month or thirty (30) days**, whichever is longer, to file a request for reconsideration of this patent term adjustment calculation. See 35 U.S.C. 154(b)(3)(B)(ii) and 37 CFR 1.322(a)(4). No extensions of time will be granted under 37 CFR 1.136.

Patentee should use document code PET.OP if electronically filing a request for reconsideration of this patent term adjustment calculation. The patentee must also include the information required by 37 CFR 1.705(b)(2) and the fee required by 37 CFR 1.18(e). If patentee does not file a timely request for reconsideration of this patent term adjustment calculation including the information required by 37 CFR 1.705(b)(2) and the fee required by 37 CFR 1.18(e), the USPTO will issue a certificate of correction reflecting the PTA determination noted above.

Patentee should be aware that in order to preserve the right to review in the United States District Court for the District of Columbia of the USPTO patent term adjustment determination, patentee must ensure that he or she also take the steps required under 35 U.S.C. 154(b)(4)(A) in a timely manner. Nothing in the request for recalculation should be construed as providing an alternative time frame for commencing a civil action under 35 U.S.C. 154(b)(4)(A).

Any questions concerning this decision should be directed to the Office of Patent Legal Administration at 571-272-7702.

UNITED STATES PATENT AND TRADEMARK OFFICE

Commissioner for Patents
United States Patent and Trademark Office
P.O. Box 1450
Alexandria, VA 22313-1450
www.uspto.gov

RUTAN & TUCKER LLP
PO BOX 1950
611 ANTON BLVD
14TH FLOOR
COSTA MESA CA 92628-1950

COPY MAILED

AUG 1 2 2005

OFFICE OF PETITIONS

In re Application of Garth, et al. Application No. 10/977,726 Filed: March 2, 2005 Attorney Docket No. 023016.0013US2	DECISION DISMISSING PETITION

This is a decision on the "RESPONSE TO NOTICE OF INCOMPLETE NONPROVISIONAL APPLICATION", filed March 2, 2005.

Application papers in the above-identified application were deposited on October 28, 2004. However, on January 14, 2005, the Initial Patent Examination Division mailed applicants a "Notice of Incomplete Nonprovisional Application." Applicants were notified that the application papers had not been accorded a filing date because the application was deposited without drawings. Applicants were further informed that the filing date of the application would be the date of receipt of drawings and a newly executed oath or declaration. However, applicants could file a petition asserting that drawings were included with the application as deposited on October 28, 2004.

In response, on March 2, 2005, applicants filed the instant paper. Applicants submitted a new declaration, and pointed out that the application is a divisional application of parent application no. 10/440,525. Furthermore, applicants stated that the drawings were already on file in the parent application.

The PTO file is the official record of papers originally filed in this application. A review of the official file reveals that drawings were not filed on October 28, 2004, since those papers are not present in the file. An applicant alleging that a paper was filed in the PTO and later misplaced has the burden of proving the allegation by a preponderance of the evidence.

Furthermore, "mere reference to another application, patent, or publication is not an incorporation of anything therein into the application containing such reference for the purpose of the disclosure required by 35 U.S.C. 112, first paragraph. In re de Seversky, 474 F.2d 671, 177 USPQ 144 (CCPA 1973)."[1]

Accordingly, the petition is **DISMISSED**.

The application will be accorded a filing date based upon the date that the missing drawings were received in the Office, or March 2, 2005.

The application file will be forwarded to the Office of Initial Patent Examination for further processing with a **filing date of March 2, 2005**, using the application papers submitted on October 24, 2004, together with the 4 sheets of drawings and the declaration filed on March 2, 2005.

Telephone inquiries related to this decision should be directed to the undersigned at 571-272-3207.

Cliff Congo
Petitions Attorney
Office of Petitions

[1] MPEP 201.06(c)(IV).

UNITED STATES PATENT AND TRADEMARK OFFICE

Commissioner for Patents
United States Patent and Trademark Office
P.O. Box 1450
Alexandria, VA 22313-1450
www.uspto.gov

RUTAN & TUCKER LLP
PO BOX 1950
611 ANTON BLVD
14TH FLOOR
COSTA MESA CA 92628-1950

COPY MAILED

NOV 2 4 2008

OFFICE OF PETITIONS

In re Application of
Geoffrey Garth, et al.
Application No. 10/977,726
Filed: March 2, 2005
Attorney Docket No. 023016.0013US2

DECISION ON PETITION
TO WITHDRAW
FROM RECORD

This is a decision on the Request to Withdraw as attorney or agent of record under 37 C.F.R. § 1.36(b), filed July 31, 2008.

The request is **NOT APPROVED**.

A grantable request to withdraw as attorney/agent of record must be signed by every attorney/agent seeking to withdraw or contain a clear indication that one attorney is signing on behalf of another/others. A request to withdraw will not be approved unless at least 30 (thirty) days would remain between the date of approval and the later of the expiration date of a time to file a response or the expiration date of the maximum time period which can be extended under 37 C.F.R. § 1.136(a).

The request cannot be approved because petitioner has not made the required certification under 37 CFR 10.40. Section 10.40(a) of Title 37 of the Code of federal Regulations requires that the practitioner to take "reasonable steps to avoid foreseeable prejudice to the rights of the client, including giving due notice to his or her client, allowing time for employment of another practitioner, delivering to the client all papers and property to which the client is entitled, and complying with all applicable laws and rules.

The request fails to provide certification in compliance with the new rules. However, if the practitioner cannot make all of the certifications, an explanation detailing why the certification cannot be made must be included in the Request. It is also noted that submitting a false certification may violate a practitioner's duty under 37 CFR 10.23(b)(4) and (b)(5).

All future communications from the Office will continue to be directed to the above-listed address until otherwise notified by applicant.

Telephone inquiries concerning this decision should be directed to undersigned at 571-272-1642.

/AMW/
April M. Wise
Petitions Examiner
Office of Petitions

cc: ROBERT FISH
FISH & ASSOCIATES, PC
2503 MAIN STREET
SUITE 1050
IRVINE, CA 92614

UNITED STATES PATENT AND TRADEMARK OFFICE

Commissioner for Patents
United States Patent and Trademark Office
P.O. Box 1450
Alexandria, VA 22313-1450
www.uspto.gov

RUTAN & TUCKER, LLP
611 ANTON BLVD.
SUITE 1400
COSTA MESA, CA 92628-1950

MAILED

JAN 30 2009

OFFICE OF PETITIONS

In re Application of	:	
Geoffrey Garth, et al.	:	
Application No. 10/977,726	:	DECISION ON PETITION
Filed: March 2, 2005	:	TO WITHDRAW
Attorney Docket No. 023016.0013US2	:	FROM RECORD
	:	

This is a decision on the Request to Withdraw as attorney or agent of record under 37 C.F.R. § 1.36(b), filed July 31, 2008.

The request is **DISMISSED** as moot.

A review of the file record indicates that the power of attorney to Rutan & Tucker, LLP has been revoked by the assignee of the patent application on December 16, 2008. Accordingly, the request to withdraw under 37 C.F.R. § 1.36(b) is moot.

All future communications from the Office will continue to be directed to the below-listed address until otherwise notified by applicant.

Telephone inquires concerning this decision should be directed to undersigned at 571-272-1642.

/AMW/
April M. Wise
Petitions Examiner
Office of Petitions

cc: ROBERT FISH
FISH & ASSOCIATES, PC
2503 MAIN STREET
SUITE 1050
IRVINE, CA 92614

UNITED STATES PATENT AND TRADEMARK OFFICE

Commissioner for Patents
United States Patent and Trademark Office
P.O. Box 1450
Alexandria, VA 22313-1450
www.uspto.gov

SAND & SEBOLT
AEGIS TOWER, SUITE 1100
4940 MUNSON STREET, NW
CANTON OH 44718-3615

COPY MAILED

OCT 2 7 2008

OFFICE OF PETITIONS

In re Application of
SEDON, Nicholas M. et al.
Application No. 10/977,744
Filed: October 29, 2004
Attorney Docket No. **3719/78US**

DECISION ON PETITION
TO WITHDRAW
FROM RECORD

This is a decision on the Request to Withdraw as attorney or agent of record under 37 C.F.R. § 1.36(b), filed October 02, 2008.

The request is **moot** because a revocation of power of attorney has been previously filed.

A review of the file record indicates that the power of attorney to SAND & SEBOLT has been revoked by the assignee of the patent application on October 09, 2008. Accordingly, the request to withdraw under 37 C.F.R. § 1.36(b) is moot.

All future communications from the Office will continue to be directed to the below-listed address until otherwise notified by applicant.

Telephone inquires concerning this decision should be directed to Tredelle Jackson at 571-272-2783.

Tredelle D. Jackson
Paralegal Specialist
Office of Petitions

cc: **ADAMS INTELLECTUAL PROPERTY LAW, P.A.**
SUITE 2350 CHARLOTTE PLAZA
201 SOUTH COLLEGE STREET
CHARLOTTE NC 28244

UNITED STATES PATENT AND TRADEMARK OFFICE

UNITED STATES DEPARTMENT OF COMMERCE
United States Patent and Trademark Office
Address: COMMISSIONER FOR PATENTS
P.O. Box 1450
Alexandria, Virginia 22313-1450
www.uspto.gov

APPLICATION NO.	FILING DATE	FIRST NAMED INVENTOR	ATTORNEY DOCKET NO.	CONFIRMATION NO.
10/977,745	10/29/2004	Bradley Darrel Olson		1144

7590 05/05/2010
RAYMOND M. GALASSO
GALASSO & ASSOCIATES L.P.
P.O. BOX 26503
AUSTIN, TX 78755-0503

EXAMINER
LOUIE, WAE LENNY

ART UNIT	PAPER NUMBER
3661	

MAIL DATE	DELIVERY MODE
05/05/2010	PAPER

Please find below and/or attached an Office communication concerning this application or proceeding.

The time period for reply, if any, is set in the attached communication.

UNITED STATES PATENT AND TRADEMARK OFFICE

Commissioner for Patents
United States Patent and Trademark Office
P.O. Box 1450
Alexandria, VA 22313-1450
www.uspto.gov

MAY - 5 2010

KNOBBE MARTENS OLSON & BEAR LLP
2040 MAIN STREET
FOURTEENTH FLOOR
IRVINE, CA 92614

In re application of	:	**DECISION ON PETITION**
Megdal et al.	:	**FOR SECOND SUSPENSION**
Application No. 10/977,745	:	**OF ACTION UNDER**
Filed: October 25, 2007	:	**37 CFR 1.103 (a)**
For: METHOD AND APPARATUS FOR RATING ASSET-BACKED SECURITIES		

This letter is responsive to the petition for a second suspension of action under 37 CFR 1.103(a) received on March 3, 2010.

The petition for suspension of action under 37 CFR 1.103(a) is **DISMISSED**.

A grantable petition for suspension of action under 37 CFR 1.103(a) requires:

1) A showing of good and sufficient cause for suspension of action, and
2) The fee set forth in 37 CFR 1.17(g), unless such cause is the fault of the Office.

A petition was filed on July 20, 2009 to suspend action by the examiner so that applicants can investigate "the issue of priority for the pending claims." At the time of filing the application, pursuant to MPEP 2001.06(d), Applicants provided notice that claims 1-31 were copied from U.S. Publication No. 2006-0242047A1 published on October 26, 2006. A decision granting a six month suspension was mailed August 13, 2009.

The instant petition again requests an additional six months suspension "as Applicants are continuing their investigation of the priority issue." As of the filing of the instant petition, applicants have had over 28 months (from the date the claims were copied) to investigate "the issue of priority for the pending claims". Applicants have failed to set forth exactly what is being investigated, the current status of the investigation, and how exactly will what's found as a result of this investigation, impact the prosecution of this application. Additionally, what specifically is left to investigate and/or discuss; and when will the investigation be completed?

Accordingly, Applicants have failed to provide a showing of good and sufficient cause for suspension of action. Prosecution of this application will commence as of the mailing of this decision. The application will be forwarded to the examiner of record to treat the amendment filed June 11, 2009.

Any questions surrounding this decision should be directed to Quality Assurance Specialist Teri P. Luu at (571) 272-7045.

Wyn Coggins, Director
Technology Center 3600
(571) 272-5350

tl: 05/03/2010

UNITED STATES PATENT AND TRADEMARK OFFICE

Commissioner for Patents
United States Patent and Trademark Office
P.O. Box 1450
Alexandria, VA 22313-1450
www.uspto.gov

Steve McFarland
Wilbur A. Jones
8512 Spring Street

MAILED

SEP 06 2005
Director's Office
Group 3700

In re Application of
Steve McFarland, et al.
Serial No. 10/977,803
Filed: October 29, 2004

: **DECISION ON PETITION TO MAKE SPECIAL**

For: EMISSIONS REDUCTION SYSTEM FOR AN INTERNAL COMBUSTION ENGINE

Applicant's petition, filed October 29, 2004, seeks to have this application made Special based upon the Environmental Quality Program and the Energy Conservation Program.

The petition has been reviewed and is found to be in compliance with the requirements for special status as set forth in Section 708.02(V) of the Manual of Patent Examining Procedure (MPEP).

PETITION GRANTED.

Richard A. Bertsch
Technology Center 3700
571-272-3750

rt/ 9/02/05

UNITED STATES PATENT AND TRADEMARK OFFICE

Commissioner for Patents
United States Patent and Trademark Office
P.O. Box 1450
Alexandria, VA 22313-1450
www.uspto.gov

Patent No. : 7,255,738
Ser. No. : 10/977,819
Inventor(s) : Blaime K. Semmens
Issued : August 14,2007
Title : LIGHTWEIGHT CEMENTITIOUS COMPOSITE MATERIAL
Docket No. :SBL-10003/38

Re: Request for Certificate of Correction

Consideration has been given your request for the issuance of a certificate of correction for the above-identified patent under the provisions of Rule(s) 1.322 or 1.323.

Assignees' names and addresses (assignment data) printed in a patent, are based *solely* on information supplied in the appropriate space for identifying the assignment data, i.e., item 3 of the Issue Fee Transmittal Form PTOL-85B. Granting of a request under 37 CFR 3.81(b) is required to correct applicant's error providing ***incorrect or erroneous*** assignment data, *before* issuance of a Certificate of Correction, under 37 CFR 1.323 *(see Manual of Patent Examining Procedures (M.P.E.P) Chp.1400, sect. 1481).* This procedure is required *at any time after the issue fee is paid*, including after issuance of the patent.

In view of the foregoing, your request is hereby denied.

A request to correct the Assignee under 37 CFR 3.81(b) should include:

A. **the processing fee set forth in 37 CFR 1.117(h) (currently $130);**
B. a statement that the failure to include the correct assignee name on the PTOL-85B was inadvertent; and
C. a copy of the Notice of Recordation of Assignment Document, reflecting the reel and frame number where the assignment(s) is recorded and/or reflecting proof of *the date* the assignment was submitted for recordation.

In the Request, Applicant(s) may request that the file be forwarded to Certificates of Correction Branch, for issuance of a Certificate of Correction, if the Request is granted.

Any request under 37 CFR 3.81(b) should be directed to the following address or facsimile number:

By mail: Mail Stop PETITIONS
Commissioner for Patents
Post Office Box 1450
Alexandria, VA 22313-1450

By hand: Customer Service Window
Mail Stop Petitions
Randolph Building
40l Dulany Street
Alexandria, VA 22314

By fax: (703) 872-9306
ATTN: Office of Petitions

If a fee (currently $100) was previously submitted for consideration of a Request for Certificate of Correction, under CFR 1.323, to correct assignment data, , no additional fee is required.

Eva James
For Cecelia Newman
Decisions & Certificates
of Correction Branch
(703) **308-9390 ext. 124** or 105

Steven M. Gruskin
Sughrue Mion PLLC

UNITED STATES DEPARTMENT OF COMMERCE
Patent and Trademark Office
ASSISTANT SECRETARY OF COMMERCE AND
COMMISSIONER OF PATENTS AND TRADEMARKS
Washington, D.C. 20231

Patent No. : 7255738
Inventor(s) : Blaine S,emmens
Issued : August 14, 2007
For: LIGHTWEIGHT CEMENTITIOUS COMPOSITE MATERIAL

Re. Request for Certificate of Correction

Consideration has been given your request under the provisions of Rule 1.322.

The alleged error on the title page, item [73 and 75] both will need a petition to be filed, before a c of c can be issued. As for the inventor's change of address will need the same as the assignee. Please see attached papers.

In view of the foregoing, your request is hereby denied.

Further correspondence concerning this matter, should be directed to:

U.S. Patent and Trademark Office
Washington, DC 20231
Attn: Decisions & Certificates of Correction Branch

For Mary Diggs
Decisions & Certificate
of Correction Branch
(703) 308-9390 ext.124 or 125

George S. Blasiak
Marjama Muldoon Blasiak & Sullivan
250 South Clinton Street, Suite 300
Syracuse, New York 13202

ej

UNITED STATES PATENT AND TRADEMARK OFFICE

Commissioner for Patents
United States Patent and Trademark Office
P.O. Box 1450
Alexandria, VA 22313-1450
www.uspto.gov

SHARP KABUSHIKI KAISHA
C/O KEATING & BENNETT, LLP
8180 GREENSBORO DRIVE
SUITE 850
MCLEAN VA 22102

COPY MAILED

AUG 06 2007

OFFICE OF PETITIONS

In re Application of	:	
Yoshiki Takata	:	
Application No. 10/977,827	:	DECISION GRANTING PETITION
Filed: October 29, 2004	:	UNDER 37 CFR 1.313(c)(2)
Attorney Docket No. 70404.35/OK	:	

This is a decision on the petition under 37 CFR 1.313(c)(2), filed August 3, 2007, to withdraw the above-identified application from issue after payment of the issue fee.

The petition is **GRANTED**.

The above-identified application is withdrawn from issue for consideration of a submission under 37 CFR 1.114 (request for continued examination). *See* 37 CFR 1.313(c)(2).

Petitioner is advised that the issue fee paid on June 28, 2007 cannot be refunded. If, however, this application is again allowed, petitioner may request that it be applied towards the issue fee required by the new Notice of Allowance.[1]

Telephone inquiries should be directed to Terri Williams at (571) 272-2991.

This application is being referred to Technology Center AU 2885 for processing of the request for continued examination under 37 CFR 1.114 and for consideration of the concurrently filed Information Disclosure Statement.

Frances Hicks
Petitions Examiner
Office of Petitions

---

[1] *The request to apply the issue fee to the new Notice may be satisfied by completing and returning the new Part B – Fee(s) Transmittal Form (along with any balance due at the time of submission). Petitioner is advised that the Issue Fee Transmittal Form* ***must*** *be completed and timely submitted to avoid abandonment of the application.*

UNITED STATES PATENT AND TRADEMARK OFFICE

Commissioner for Patents
United States Patent and Trademark Office
P.O. Box 1450
Alexandria, VA 22313-1450
www.uspto.gov

EGBERT LAW OFFICES
412 MAIN STREET, 7TH FLOOR
HOUSTON TX 77002

COPY MAILED
JAN 11 2008
OFFICE OF PETITIONS

In re Application of	:	
Lee, Yan-Yee	:	
Application No. 10/977,835	:	DECISION ON PETITION
Filed: November 1, 2004	:	
Attorney Docket No. 4-1090	:	

This is a decision on the petition under the unintentional provisions of 37 CFR 1.137(b), filed December 10, 2007, to revive the above-identified application.

The petition is **GRANTED**.

The petition satisfies the requirements of 37 CFR 1.137(b) in that petitioner has supplied (1) the reply in the form of the Issue Fee Transmittal with payment of the issue and publication fees, (2) the petition fee, and (3) a proper statement of unintentional delay.

Telephone inquiries concerning this decision should be directed to the undersigned at (571) 272-3206.

This matter is being referred to the Publishing Division for publishing into a patent.

Liana Walsh
Petitions Examiner
Office of Petitions

UNITED STATES PATENT AND TRADEMARK OFFICE

Commissioner for Patents
United States Patent and Trademark Office
P.O. Box 1450
Alexandria, VA 22313-1450
www.uspto.gov

JOHN C. MCMAHON
PO BOX 30069
KANSAS CITY, MO 64112

MAILED

JUN 08 2010

OFFICE OF PETITIONS

In re Application of:	:	
Pilar De Frutos ESCRIG et al.	:	
Application No. 10/977,837	:	DECISION ON PETITION
Filed: October 29, 2004	:	
Attorney Docket No. 10,495	:	

This is a decision on the petition under 37 CFR 1.137(b), filed March 17, 2010, to revive the above-identified application.

The petition is **DISMISSED**.

Any request for reconsideration of this decision must be submitted within TWO (2) MONTHS from the mail date of this decision. Extensions of time under 37 CFR 1.136(a) are permitted. The reconsideration request should include a cover letter entitled "Renewed Petition under 37 CFR 1.137(b)." This is **not** a final agency action within the meaning of 5 U.S.C. § 704.

The above-identified application became abandoned as a result of petitioner's failure to file an appeal brief (and fee required by 37 CFR 41.20(b)(2)) within the time period provided in 37 CFR 41.37(a)(1). As an appeal brief (and appeal brief fee) was not filed within two (2) months of the Notice of Appeal filed July 21, 2008, and no extensions of time under the provisions of 37 CFR 1.136(a) were obtained, the appeal was dismissed and the proceedings as to the rejected claims were terminated. See 37 CFR 41.37(b). As no claim was allowed, the application became abandoned on September 22, 2008. See MPEP 1215.04.

A grantable petition under 37 CFR 1.137(b) must be accompanied by: (1) the required reply, unless previously filed; (2) the petition fee as set forth in 37 CFR 1.17(m); (3) a statement that the entire delay in filing the required reply from the due date for the reply until the filing of a grantable petition pursuant to 37 CFR 1.137(b) was unintentional; and (4) any terminal disclaimer (and fee as set forth in 37 CFR 1.20(d)) required by 37 CFR 1.137(c). Where there is a question as to whether either the abandonment or the delay in filing a petition under 37 CFR 1.137 was unintentional, the Commissioner may require additional information. *See* MPEP 711.03(c)(II)(C) and (D). The instant petition lacks item (1) above in that the reply included with the petition is not an acceptable reply to the Notice of Appeal filed July 21, 2008.

Further correspondence with respect to this matter should be addressed as follows:

By mail: Mail Stop PETITIONS
Commissioner for Patents
Post Office Box 1450
Alexandria, VA 22313-1450

By hand: Customer Service Window
Mail Stop Petitions
Randolph Building
401 Dulany Street
Alexandria, VA 22314

By fax: (703) 872-9306
ATTN: Office of Petitions

Telephone inquiries concerning this decision should be directed to Shahid Alam at (571) 272-6052 or in his absence to the undersigned at (571) 272-4914.

Ramesh Krishnamurthy

Ramesh Krishnamurthy
Petitions Examiner
Office of Petitions

UNITED STATES PATENT AND TRADEMARK OFFICE

COMMISSIONER FOR PATENTS
UNITED STATES PATENT AND TRADEMARK OFFICE
P.O. BOX 1450
ALEXANDRIA, VA 22313-1450
www.uspto.gov

Jackson Walker LLP
901 Main Street
Suite 6000
Dallas, TX 75202-3797

COPY MAILED

JUL 1 8 2008

OFFICE OF PETITIONS

In re Application of :
Michael C. Hutchison et al. :
Application No. 10/977,865 :
Filed: October 29, 2004 :
Attorney Docket No. 106923.00072 :

DECISION ON PETITION

This is a decision on the petition under the unintentional provisions of 37 CFR 1.137(b), filed January 22, 2008, to revive the above-identified application.

The petition is **DISMISSED**.

Any request for reconsideration of this decision must be submitted within TWO (2) MONTHS from the mail date of this decision. Extensions of time under 37 CFR 1.136(a) are permitted. The reconsideration request should include a cover letter entitled "Renewed Petition under 37 CFR 1.137(b)." This is **not** a final agency action within the meaning of 5 U.S.C. § 704.

A grantable petition under 37 CFR 1.137(b) must be accompanied by: (1) the required reply, unless previously filed; (2) the petition fee as set forth in 37 CFR 1.17(m); (3) a statement that the entire delay in filing the required reply from the due date for the reply until the filing of a grantable petition pursuant to 37 CFR 1.137(b) was unintentional; and (4) any terminal disclaimer (and fee as set forth in 37 CFR 1.20(d)) required by 37 CFR 1.137(d). Where there is a question as to whether either the abandonment or the delay in filing a petition under 37 CFR 1.137 was unintentional, the Director may require additional information. See MPEP 711.03(c)(II)(C) and (D). The instant petition lacks item(s) 1.

The application became abandoned for failure to timely file a reply within the meaning of 37 CFR 1.113 to the final Office action of December 26, 2006. The proposed reply required for consideration of a petition to revive must be a Notice of Appeal (and appeal fee required by 37 CFR 41.20(b)(2)), an amendment that *prima facie* places the application in condition for allowance, a Request for Continued Examination (RCE) and submission (37 CFR 1.114), or the filing of a continuing application under 37 CFR 1.53(b). *See* MPEP 711.03(c)(III)(A)(2). Since the reply submitted does not *prima facie* place the application in condition for allowance for the reasons stated on the attached Examiner's Advisory Action, the reply required must be a Notice of Appeal (and appeal fee), RCE, or the filing of a continuing application under 37 CFR 1.53(b).

Further correspondence with respect to this matter should be addressed as follows:

By Mail: Mail Stop PETITION
Commissioner for Patents
P. O. Box 1450
Alexandria, VA 22313-1450

By hand: U. S. Patent and Trademark Office
Customer Service Window, Mail Stop Petitions
Randolph Building
401 Dulany Street
Alexandria, VA 22314

The centralized facsimile number is **(571) 273-8300.**

Telephone inquiries concerning this decision should be directed to Kimberly Inabinet at (571) 272-4618.

Carl Friedman
Petitions Examiner
Office of Petitions

Attachment: Courtesy copy of advisory action

Advisory Action Before the Filing of an Appeal Brief	Application No.	Applicant(s)	
	10/977,865	HUTCHISON ET AL.	
	Examiner	Art Unit	
	PHUNG NGUYEN	2612	

--The MAILING DATE of this communication appears on the cover sheet with the correspondence address --

THE REPLY FILED 22 January 2008 FAILS TO PLACE THIS APPLICATION IN CONDITION FOR ALLOWANCE.

1. ☒ The reply was filed after a final rejection, but prior to or on the same day as filing a Notice of Appeal. To avoid abandonment of this application, applicant must timely file one of the following replies: (1) an amendment, affidavit, or other evidence, which places the application in condition for allowance; (2) a Notice of Appeal (with appeal fee) in compliance with 37 CFR 41.31; or (3) a Request for Continued Examination (RCE) in compliance with 37 CFR 1.114. The reply must be filed within one of the following time periods:
   a) ☒ The period for reply expires 3 months from the mailing date of the final rejection.
   b) ☐ The period for reply expires on: (1) the mailing date of this Advisory Action, or (2) the date set forth in the final rejection, whichever is later. In no event, however, will the statutory period for reply expire later than SIX MONTHS from the mailing date of the final rejection.

   Examiner Note: If box 1 is checked, check either box (a) or (b). ONLY CHECK BOX (b) WHEN THE FIRST REPLY WAS FILED WITHIN TWO MONTHS OF THE FINAL REJECTION. See MPEP 706.07(f).

Extensions of time may be obtained under 37 CFR 1.136(a). The date on which the petition under 37 CFR 1.136(a) and the appropriate extension fee have been filed is the date for purposes of determining the period of extension and the corresponding amount of the fee. The appropriate extension fee under 37 CFR 1.17(a) is calculated from: (1) the expiration date of the shortened statutory period for reply originally set in the final Office action; or (2) as set forth in (b) above, if checked. Any reply received by the Office later than three months after the mailing date of the final rejection, even if timely filed, may reduce any earned patent term adjustment. See 37 CFR 1.704(b).

NOTICE OF APPEAL

2. ☐ The Notice of Appeal was filed on _____. A brief in compliance with 37 CFR 41.37 must be filed within two months of the date of filing the Notice of Appeal (37 CFR 41.37(a)), or any extension thereof (37 CFR 41.37(e)), to avoid dismissal of the appeal. Since a Notice of Appeal has been filed, any reply must be filed within the time period set forth in 37 CFR 41.37(a).

AMENDMENTS

3. ☒ The proposed amendment(s) filed after a final rejection, but prior to the date of filing a brief, will not be entered because
   (a) ☒ They raise new issues that would require further consideration and/or search (see NOTE below);
   (b) ☐ They raise the issue of new matter (see NOTE below);
   (c) ☐ They are not deemed to place the application in better form for appeal by materially reducing or simplifying the issues for appeal; and/or
   (d) ☐ They present additional claims without canceling a corresponding number of finally rejected claims.

   NOTE: *See Continuation Sheet*. (See 37 CFR 1.116 and 41.33(a)).
4. ☐ The amendments are not in compliance with 37 CFR 1.121. See attached Notice of Non-Compliant Amendment (PTOL-324).
5. ☐ Applicant's reply has overcome the following rejection(s): _____.
6. ☐ Newly proposed or amended claim(s) _____ would be allowable if submitted in a separate, timely filed amendment canceling the non-allowable claim(s).
7. ☒ For purposes of appeal, the proposed amendment(s): a) ☒ will not be entered, or b) ☐ will be entered and an explanation of how the new or amended claims would be rejected is provided below or appended.
   The status of the claim(s) is (or will be) as follows:
   Claim(s) allowed: _____.
   Claim(s) objected to: _____.
   Claim(s) rejected: *1-36*.
   Claim(s) withdrawn from consideration: _____.

AFFIDAVIT OR OTHER EVIDENCE

8. ☐ The affidavit or other evidence filed after a final action, but before or on the date of filing a Notice of Appeal will not be entered because applicant failed to provide a showing of good and sufficient reasons why the affidavit or other evidence is necessary and was not earlier presented. See 37 CFR 1.116(e).
9. ☐ The affidavit or other evidence filed after the date of filing a Notice of Appeal, but prior to the date of filing a brief, will not be entered because the affidavit or other evidence failed to overcome all rejections under appeal and/or appellant fails to provide a showing a good and sufficient reasons why it is necessary and was not earlier presented. See 37 CFR 41.33(d)(1).
10. ☐ The affidavit or other evidence is entered. An explanation of the status of the claims after entry is below or attached.

REQUEST FOR RECONSIDERATION/OTHER

11. ☐ The request for reconsideration has been considered but does NOT place the application in condition for allowance because: _____.
12. ☐ Note the attached Information *Disclosure Statement*(s). (PTO/SB/08) Paper No(s). _____
13. ☐ Other: _____.

/PHUNG NGUYEN/
Primary Examiner, Art Unit 2612

Continuation of 3. NOTE: The sensor coupled to the main housing adapted to sense conditions proximate the traffic control light not cause by the traffic is recited for the first time.

UNITED STATES PATENT AND TRADEMARK OFFICE

Commissioner for Patents
United States Patent and Trademark Office
P.O. Box 1450
Alexandria, VA 22313-1450
www.uspto.gov

MCANDREWS HELD & MALLOY, LTD
500 WEST MADISON STREET
SUITE 3400
CHICAGO IL 60661

COPY MAILED

JAN 03 2007

OFFICE OF PETITIONS

In re Application of :
Darabi, et al. :
Application No. 10/977,868 : ON PETITION
Filed: October 29, 2004 :
Attorney Docket No. 16157US01 :

This is a decision on (1) the petition under 37 CFR 1.78(a)(3) to accept an unintentionally delayed claim under 35 U.S.C. § 120 for the benefit of priority to the prior-filed nonprovisional application set forth in the amendment filed with the petition and (2) the petition under 37 CFR 1.48(a) to add Henrick T. Jensen and Brima Ibrahim as joint inventors of the above-identified application. Both petitions were filed on September 18, 2006.

The petition under 37 CFR 1.48(a) to correct inventorship is **GRANTED**.

The petition under 37 CFR 1.78(a)(3) is **DISMISSED**.

With respect to the petition under 37 CFR 1.48(a): An executed declaration in compliance with 37 CFR 1.63 was filed on October 29, 2004. The executed declaration listed a sole inventor – Hooman Darabi.

The Rule 48(a) petition was filed to correct the inventorship by adding Henrick T. Jensen and Brima Ibrahim as joint inventors.

37 CFR 1.48(a) requires: (1) a request to correct the inventorship that sets forth the desired inventorship change (2) a statement from each person being added and from each person being deleted as an inventor that the error occurred without deceptive intention on his or her part; (3) an oath or declaration by each actual inventor or inventors as required by 37 CFR 1.63 or as permitted by 37 CFR 1.42, 1.43 or 1.47; (4) the fee set forth in 37 CFR 1.17 (i); and (5) the written consent of any existing assignee, if any of the originally named inventors has executed an assignment.

Petitioner has satisfied the requirements of 37 CFR 1.48(a). Petitioner has shown that this nonprovisional application, as filed, through error and without deceptive intent, improperly set forth the inventorship, and, accordingly, this application has been corrected in compliance with 37 CFR 1.48(a). The inventorship of this application has been changed by the addition of Henrik T. Jensen and Brima Ibrahim.

Please find enclosed a corrected filing receipt that reflects the corrected inventorship.

With respect to the petition under 37 CFR 1.78(a)(3): A petition for acceptance of a claim for late priority under 37 CFR 1.78(a)(3) is only applicable to those applications filed on or after November 29, 2000. Further, the petition is appropriate only after the expiration of the period specified in 37 CFR 1.78(a)(2)(ii). In addition, the petition under 37 CFR 1.78(a)(3) must be accompanied by:

(1) the reference required by 35 U.S.C. § 120 and 37 CFR 1.78(a)(2)(i) of the prior-filed application, unless previously submitted;
(2) the surcharge set forth in § 1.17(t); and
(3) a statement that the entire delay between the date the claim was due under 37 CFR 1.78(a)(2)(ii) and the date the claim was filed was unintentional. The Director may require additional information where there is a question whether the delay was unintentional.

The petition does not satisfy item (1) above.

The reference to add the prior-filed application as the first paragraph of the specification on page one following the title is not acceptable as drafted since it improperly incorporates by reference the prior-filed application. An incorporation by reference statement added after an application's filing date is not effective because no new matter can be added to an application after its filing date (*see* 35 U.S.C. § 132(a)). If an incorporation by reference statement is included in an amendment to the specification to add a benefit claim under 35 U.S.C. § 120 after the filing date of the application, the amendment would not be proper. When a benefit claim under 35 U.S.C. § 120 is submitted after the filing of an application, the reference to the prior application cannot include an incorporation by reference statement of the prior application. *See* Dart Industries v. Banner, 636 F.2d 684, 207 USPQ 273 (C.A.D.C. 1980). *Note* MPEP §§ 201.06(c) and 608.04(b).

If reconsideration of this Rule 78(a)(3) decision is desired, a renewed petition under 37 CFR § 1.78(a)(3) and an Application Data Sheet or an amendment (complying with the provisions of 37 CFR 1.121 and 37 CFR 1.76(b)(5)) to correct the above matter is required.

Further correspondence with respect to this matter should be addressed as follows:

By mail: Mail Stop PETITIONS
Commissioner for Patents
Post Office Box 1450
Alexandria, VA 22313-1450

By hand: Customer Service Window
Mail Stop Petitions
Randolph Building
40l Dulany Street
Alexandria, VA 22314

By fax: (571) 273-8300
ATTN: Office of Petitions

Any questions concerning this matter may be directed to the undersigned at (571) 272-3230.

Shirene Willis Brantley

Shirene Willis Brantley
Senior Petitions Attorney
Office of Petitions

Enclosure: corrected filing receipt

UNITED STATES PATENT AND TRADEMARK OFFICE

UNITED STATES DEPARTMENT OF COMMERCE
United States Patent and Trademark Office
Address: COMMISSIONER FOR PATENTS
P.O. Box 1450
Alexandria, Virginia 22313-1450
www.uspto.gov

APPL NO.	FILING OR 371 (c) DATE	ART UNIT	FIL FEE REC'D	ATTY.DOCKET NO	DRAWINGS	TOT CLMS	IND CLMS
10/977,868	10/29/2004	2817	1108	16157US01	8	21	2

CONFIRMATION NO. 1226

CORRECTED FILING RECEIPT

OC000000021637972

23446
MCANDREWS HELD & MALLOY, LTD
500 WEST MADISON STREET
SUITE 3400
CHICAGO, IL 60661

Date Mailed: 12/15/2006

Receipt is acknowledged of this regular Patent Application. It will be considered in its order and you will be notified as to the results of the examination. Be sure to provide the U.S. APPLICATION NUMBER, FILING DATE, NAME OF APPLICANT, and TITLE OF INVENTION when inquiring about this application. Fees transmitted by check or draft are subject to collection. Please verify the accuracy of the data presented on this receipt. **If an error is noted on this Filing Receipt, please mail to the Commissioner for Patents P.O. Box 1450 Alexandria Va 22313-1450. Please provide a copy of this Filing Receipt with the changes noted thereon. If you received a "Notice to File Missing Parts" for this application, please submit any corrections to this Filing Receipt with your reply to the Notice. When the USPTO processes the reply to the Notice, the USPTO will generate another Filing Receipt incorporating the requested corrections (if appropriate).**

Applicant(s)

Hooman Darabi, Irvine, CA;
Henrik T. Jensen, Long Beach, CA;
Brima Ibrahim, Aliso Viejo, CA;

Power of Attorney: The patent practitioners associated with Customer Number **23446**.

Domestic Priority data as claimed by applicant

Foreign Applications

If Required, Foreign Filing License Granted: 12/28/2004

The country code and number of your priority application, to be used for filing abroad under the Paris Convention, is US10/977,868

Projected Publication Date: Not Applicable

Non-Publication Request: No

Early Publication Request: No

Title

METHOD AND SYSTEM FOR LOW NOISE AMPLIFIER (LNA) GAIN ADJUSTMENT THROUGH NARROWBAND RECEIVED SIGNAL STRENGTH INDICATOR (NRSSI)

Preliminary Class

330

PROTECTING YOUR INVENTION OUTSIDE THE UNITED STATES

Since the rights granted by a U.S. patent extend only throughout the territory of the United States and have no effect in a foreign country, an inventor who wishes patent protection in another country must apply for a patent in a specific country or in regional patent offices. Applicants may wish to consider the filing of an international application under the Patent Cooperation Treaty (PCT). An international (PCT) application generally has the same effect as a regular national patent application in each PCT-member country. The PCT process **simplifies** the filing of patent applications on the same invention in member countries, but **does not result** in a grant of "an international patent" and does not eliminate the need of applicants to file additional documents and fees in countries where patent protection is desired.

Almost every country has its own patent law, and a person desiring a patent in a particular country must make an application for patent in that country in accordance with its particular laws. Since the laws of many countries differ in various respects from the patent law of the United States, applicants are advised to seek guidance from specific foreign countries to ensure that patent rights are not lost prematurely.

Applicants also are advised that in the case of inventions made in the United States, the Director of the USPTO must issue a license before applicants can apply for a patent in a foreign country. The filing of a U.S. patent application serves as a request for a foreign filing license. The application's filing receipt contains further information and guidance as to the status of applicant's license for foreign filing.

Applicants may wish to consult the USPTO booklet, "General Information Concerning Patents" (specifically, the section entitled "Treaties and Foreign Patents") for more information on timeframes and deadlines for filing foreign patent applications. The guide is available either by contacting the USPTO Contact Center at 800-786-9199, or it can be viewed on the USPTO website at http://www.uspto.gov/web/offices/pac/doc/general/index.html.

For information on preventing theft of your intellectual property (patents, trademarks and copyrights), you may wish to consult the U.S. Government website, http://www.stopfakes.gov. Part of a Department of Commerce initiative, this website includes self-help "toolkits" giving innovators guidance on how to protect intellectual property in specific countries such as China, Korea and Mexico. For questions regarding patent enforcement issues, applicants may call the U.S. Government hotline at 1-866-999-HALT (1-866-999-4158).

LICENSE FOR FOREIGN FILING UNDER
Title 35, United States Code, Section 184
Title 37, Code of Federal Regulations, 5.11 & 5.15

GRANTED

The applicant has been granted a license under 35 U.S.C. 184, if the phrase "IF REQUIRED, FOREIGN FILING LICENSE GRANTED" followed by a date appears on this form. Such licenses are issued in all applications where the conditions for issuance of a license have been met, regardless of whether or not a license may be required as set forth in 37 CFR 5.15. The scope and limitations of this license are set forth in 37 CFR 5.15(a) unless an earlier license has been issued under 37 CFR 5.15(b). The license is subject to revocation upon written notification. The date indicated is the effective date of the license, unless an earlier license of similar scope has been granted under 37 CFR 5.13 or 5.14.

This license is to be retained by the licensee and may be used at any time on or after the effective date thereof

unless it is revoked. This license is automatically transferred to any related applications(s) filed under 37 CFR 1.53(d). This license is not retroactive.

The grant of a license does not in any way lessen the responsibility of a licensee for the security of the subject matter as imposed by any Government contract or the provisions of existing laws relating to espionage and the national security or the export of technical data. Licensees should apprise themselves of current regulations especially with respect to certain countries, of other agencies, particularly the Office of Defense Trade Controls, Department of State (with respect to Arms, Munitions and Implements of War (22 CFR 121-128)); the Bureau of Industry and Security, Department of Commerce (15 CFR parts 730-774); the Office of Foreign Assets Control, Department of Treasury (31 CFR Parts 500+) and the Department of Energy.

NOT GRANTED

No license under 35 U.S.C. 184 has been granted at this time, if the phrase "IF REQUIRED, FOREIGN FILING LICENSE GRANTED" DOES NOT appear on this form. Applicant may still petition for a license under 37 CFR 5.12, if a license is desired before the expiration of 6 months from the filing date of the application. If 6 months has lapsed from the filing date of this application and the licensee has not received any indication of a secrecy order under 35 U.S.C. 181, the licensee may foreign file the application pursuant to 37 CFR 5.15(b).

UNITED STATES PATENT AND TRADEMARK OFFICE

Commissioner for Patents
United States Patent and Trademark Office
P.O. Box 1450
Alexandria, VA 22313-1450
www.uspto.gov

MCANDREWS HELD & MALLOY, LTD
500 WEST MADISON STREET
SUITE 3400
CHICAGO IL 60661

COPY MAILED

MAR 15 2007

OFFICE OF PETITIONS

In re Application of	:	
Darabi, et al.	:	
Application No. 10/977,868	:	ON PETITION
Filed: October 29, 2004	:	
Attorney Docket No. 16157US01	:	

This is a decision on the reconsideration petition under 37 CFR 1.78(a)(3), filed January 22, 2007, to accept an unintentionally delayed claim under 35 U.S.C. § 120 for the benefit of priority to the prior-filed nonprovisional application set forth in the amendment filed with the petition.

The petition under 37 CFR 1.78(a)(3) is **GRANTED**.

A petition for acceptance of a claim for late priority under 37 CFR 1.78(a)(3) is only applicable to those applications filed on or after November 29, 2000. Further, the petition is appropriate only after the expiration of the period specified in 37 CFR 1.78(a)(2)(ii). In addition, the petition under 37 CFR 1.78(a)(3) must be accompanied by:

(1) the reference required by 35 U.S.C. § 120 and 37 CFR 1.78(a)(2)(i) of the prior-filed application, unless previously submitted;
(2) the surcharge set forth in § 1.17(t); and
(3) a statement that the entire delay between the date the claim was due under 37 CFR 1.78(a)(2)(ii) and the date the claim was filed was unintentional. The Director may require additional information where there is a question whether the delay was unintentional.

All of the above requirements having been satisfied, the late claim for priority under 35 U.S.C. § 120 is accepted as being unintentionally delayed.

The granting of the petition to accept the delayed benefit claim to the prior-filed application under 37 CFR 1.78(a)(3) should not be construed as meaning that this application is entitled to the benefit of the prior-filed application. In order for this application to be entitled to the

benefit of the prior-filed application, all other requirements under 35 U.S.C. § 120 and 37 CFR 1.78(a)(1) and (a)(2) must be met. Similarly, the fact that the corrected Filing Receipt accompanying this decision on petition includes the prior-filed application should not be construed as meaning that applicant is entitled to the claim for benefit of priority to the prior-filed application noted thereon. Accordingly, the examiner will, in due course, consider this benefit claim and determine whether the application is entitled to the benefit of the earlier filing date.

A corrected Filing Receipt, which includes the priority claim to the prior-filed nonprovisional application, accompanies this decision on petition.

Any inquiries concerning this decision may be directed to the undersigned at (571) 272-3230. All other inquiries concerning either the examination procedures or status of the application should be directed to the Technology Center.

This application is being forwarded to Technology Center Art Unit 2817 for consideration by the examiner of applicant's entitlement to claim benefit of priority under 35 U.S.C. § 120 to the prior-filed application.

Shirene Willis Brantley

Shirene Willis Brantley
Senior Petitions Attorney
Office of Petitions

ATTACHMENT: Corrected Filing Receipt

UNITED STATES PATENT AND TRADEMARK OFFICE

UNITED STATES DEPARTMENT OF COMMERCE
United States Patent and Trademark Office
Address: COMMISSIONER FOR PATENTS
P.O. Box 1450
Alexandria, Virginia 22313-1450
www.uspto.gov

APPL NO.	FILING OR 371(c) DATE	ART UNIT	FIL FEE REC'D	ATTY.DOCKET NO	TOT CLMS	IND CLMS
10/977,868	10/29/2004	2817	1108	16157US01	21	2

CONFIRMATION NO. 1226

CORRECTED FILING RECEIPT

OC000000022892818

23446
MCANDREWS HELD & MALLOY, LTD
500 WEST MADISON STREET
SUITE 3400
CHICAGO, IL 60661

Date Mailed: 03/14/2007

Receipt is acknowledged of this regular Patent Application. It will be considered in its order and you will be notified as to the results of the examination. Be sure to provide the U.S. APPLICATION NUMBER, FILING DATE, NAME OF APPLICANT, and TITLE OF INVENTION when inquiring about this application. Fees transmitted by check or draft are subject to collection. Please verify the accuracy of the data presented on this receipt. **If an error is noted on this Filing Receipt, please mail to the Commissioner for Patents P.O. Box 1450 Alexandria Va 22313-1450. Please provide a copy of this Filing Receipt with the changes noted thereon. If you received a "Notice to File Missing Parts" for this application, please submit any corrections to this Filing Receipt with your reply to the Notice. When the USPTO processes the reply to the Notice, the USPTO will generate another Filing Receipt incorporating the requested corrections (if appropriate).**

Applicant(s)

Hooman Darabi, Irvine, CA;
Henrik T. Jensen, Long Beach, CA;
Brima Ibrahim, Aliso Viejo, CA;

Power of Attorney: The patent practitioners associated with Customer Number **23446**.

Domestic Priority data as claimed by applicant

This application is a CIP of 10/367,492 02/14/2003

Foreign Applications

If Required, Foreign Filing License Granted: 12/28/2004

The country code and number of your priority application, to be used for filing abroad under the Paris Convention, is US10/977,868

Projected Publication Date: Not Applicable

Non-Publication Request: No

Early Publication Request: No

Title

METHOD AND SYSTEM FOR LOW NOISE AMPLIFIER (LNA) GAIN ADJUSTMENT THROUGH NARROWBAND RECEIVED SIGNAL STRENGTH INDICATOR (NRSSI)

Preliminary Class

330

PROTECTING YOUR INVENTION OUTSIDE THE UNITED STATES

Since the rights granted by a U.S. patent extend only throughout the territory of the United States and have no effect in a foreign country, an inventor who wishes patent protection in another country must apply for a patent in a specific country or in regional patent offices. Applicants may wish to consider the filing of an international application under the Patent Cooperation Treaty (PCT). An international (PCT) application generally has the same effect as a regular national patent application in each PCT-member country. The PCT process **simplifies** the filing of patent applications on the same invention in member countries, but **does not result** in a grant of "an international patent" and does not eliminate the need of applicants to file additional documents and fees in countries where patent protection is desired.

Almost every country has its own patent law, and a person desiring a patent in a particular country must make an application for patent in that country in accordance with its particular laws. Since the laws of many countries differ in various respects from the patent law of the United States, applicants are advised to seek guidance from specific foreign countries to ensure that patent rights are not lost prematurely.

Applicants also are advised that in the case of inventions made in the United States, the Director of the USPTO must issue a license before applicants can apply for a patent in a foreign country. The filing of a U.S. patent application serves as a request for a foreign filing license. The application's filing receipt contains further information and guidance as to the status of applicant's license for foreign filing.

Applicants may wish to consult the USPTO booklet, "General Information Concerning Patents" (specifically, the section entitled "Treaties and Foreign Patents") for more information on timeframes and deadlines for filing foreign patent applications. The guide is available either by contacting the USPTO Contact Center at 800-786-9199, or it can be viewed on the USPTO website at http://www.uspto.gov/web/offices/pac/doc/general/index.html.

For information on preventing theft of your intellectual property (patents, trademarks and copyrights), you may wish to consult the U.S. Government website, http://www.stopfakes.gov. Part of a Department of Commerce initiative, this website includes self-help "toolkits" giving innovators guidance on how to protect intellectual property in specific countries such as China, Korea and Mexico. For questions regarding patent enforcement issues, applicants may call the U.S. Government hotline at 1-866-999-HALT (1-866-999-4158).

LICENSE FOR FOREIGN FILING UNDER
Title 35, United States Code, Section 184
Title 37, Code of Federal Regulations, 5.11 & 5.15

GRANTED

The applicant has been granted a license under 35 U.S.C. 184, if the phrase "IF REQUIRED, FOREIGN FILING LICENSE GRANTED" followed by a date appears on this form. Such licenses are issued in all applications where the conditions for issuance of a license have been met, regardless of whether or not a license may be required as set forth in 37 CFR 5.15. The scope and limitations of this license are set forth in 37 CFR 5.15(a) unless an earlier license has been issued under 37 CFR 5.15(b). The license is subject to revocation upon written notification. The date indicated is the effective date of the license, unless an earlier license of similar scope has been granted under 37 CFR 5.13 or 5.14.

This license is to be retained by the licensee and may be used at any time on or after the effective date thereof unless it is revoked. This license is automatically transferred to any related applications(s) filed under 37 CFR 1.53(d). This license is not retroactive.

The grant of a license does not in any way lessen the responsibility of a licensee for the security of the subject matter as imposed by any Government contract or the provisions of existing laws relating to espionage and the national security or the export of technical data. Licensees should apprise themselves of current regulations especially with respect to certain countries, of other agencies, particularly the Office of Defense Trade Controls, Department of State (with respect to Arms, Munitions and Implements of War (22 CFR 121-128)); the Bureau of Industry and Security, Department of Commerce (15 CFR parts 730-774); the Office of Foreign Assets Control, Department of Treasury (31 CFR Parts 500+) and the Department of Energy.

NOT GRANTED

No license under 35 U.S.C. 184 has been granted at this time, if the phrase "IF REQUIRED, FOREIGN FILING LICENSE GRANTED" DOES NOT appear on this form. Applicant may still petition for a license under 37 CFR 5.12, if a license is desired before the expiration of 6 months from the filing date of the application. If 6 months has lapsed from the filing date of this application and the licensee has not received any indication of a secrecy order under 35 U.S.C. 181, the licensee may foreign file the application pursuant to 37 CFR 5.15(b).

UNITED STATES PATENT AND TRADEMARK OFFICE

UNITED STATES DEPARTMENT OF COMMERCE
United States Patent and Trademark Office
Address: COMMISSIONER FOR PATENTS
P.O. Box 1450
Alexandria, Virginia 22313-1450
www.uspto.gov

MCANDREWS HELD & MALLOY, LTD
500 WEST MADISON STREET
SUITE 3400
CHICAGO, IL 60661

Mail Date: 04/21/2010

Applicant	: Meng-An (Michael) Pan	: DECISION ON REQUEST FOR
Patent Number	: 7583947	: RECALCULATION of PATENT
Issue Date	: 09/01/2009	: TERM ADJUSTMENT IN VIEW
Appliction No	: 10/977,869	: OF WYETH AND NOTICE OF INTENT TO
Filed	: 10/29/2004	: ISSUE CERTIFICATE OF CORRECTION
		:

The Request for Recalculation is **GRANTED** to the extent indicated.

The patent term adjustment has been determined to be **494** days. The USPTO will *sua sponte* issue a certificate of correction reflecting the amount of PTA days determined by the recalculation.

Prior to the issuance of the certificate of correction, the USPTO will afford patentee an opportunity to be heard and request reconsideration. Accordingly, patentee has **one month or thirty (30) days**, whichever is longer, to file a request for reconsideration of this patent term adjustment calculation. See 35 U.S.C. 154(b)(3)(B)(ii) and 37 CFR 1.322(a)(4). No extensions of time will be granted under 37 CFR 1.136.

Patentee should use document code PET.OP if electronically filing a request for reconsideration of this patent term adjustment calculation. The patentee must also include the information required by 37 CFR 1.705(b)(2) and the fee required by 37 CFR 1.18(e). If patentee does not file a timely request for reconsideration of this patent term adjustment calculation including the information required by 37 CFR 1.705(b)(2) and the fee required by 37 CFR 1.18(e), the USPTO will issue a certificate of correction reflecting the PTA determination noted above.

Patentee should be aware that in order to preserve the right to review in the United States District Court for the District of Columbia of the USPTO patent term adjustment determination, patentee must ensure that he or she also take the steps required under 35 U.S.C. 154(b)(4)(A) in a timely manner. Nothing in the request for recalculation should be construed as providing an alternative time frame for commencing a civil action under 35 U.S.C. 154(b)(4)(A).

Any questions concerning this decision should be directed to the Office of Patent Legal Administration at 571-272-7702.

UNITED STATES PATENT AND TRADEMARK OFFICE

Commissioner for Patents
United States Patent and Trademark Office
P.O. Box 1450
Alexandria, VA 22313-1450
www.uspto.gov

Paper No.

Mintz, Levin, Cohn, Ferris,
Glovsky and Popeo, P.C.
The Chrysler Center
666 Third Avenue, 24th Floor
New York NY 10017

COPY MAILED

MAR 3 1 2008

OFFICE OF PETITIONS

In re Application of Dennis Zager, Jr. et al. Application No. 10/977,875 Filed: October 28, 2004 Attorney Docket No.: 27569-501 Title: METHODS AND DEVICES FOR ALTERING STRING SPACING AND TUNINGS OF A STRINGED INSTRUMENT	DECISION ON PETITION PURSUANT TO 37 C.F.R. § 1.181

This is a decision on the petition filed March 13, 2008, pursuant to 37 C.F.R. § 1.181, requesting that the holding of abandonment in the above-identified application be withdrawn.

The above-identified application became abandoned for failure to reply in a timely manner to the non-final Office action, mailed August 9, 2007, which set a shortened statutory period for reply of three months. No response was received, and no extensions of time under the provisions of 37 C.F.R. § 1.136(a) were requested. Accordingly, the above-identified application became abandoned on November 10, 2007. A notice of abandonment was mailed on February 21, 2008.

With this petition, Petitioner has asserted that a response was submitted to the Office on February 11, 2008. Petitioner has submitted a copy of a postcard receipt, which evinces that an "Amendment/Response" and a "Petition for Ext. of Time" was received in the Office on February 11, 2008.

Moreover, it is noted that this same response has been located in the electronic file, and Office records reflect the receipt

of $525 (the fee that is associated with a petition for a three-month extension of time); therefore, it is clear that this response was received on February 11, 2007.

It is further noted that February 9, 2008 fell on a Saturday.

Considering the facts and circumstances of the delay at issue, as set forth on petition, it is concluded that Petitioner has met his burden of establishing that a response was timely submitted.

Accordingly, the petition under 37 C.F.R. § 1.181(a) is **GRANTED**. The holding of abandonment is **WITHDRAWN**.

The Technology Center will be notified of this decision. The Technology Center's support staff will notify the Examiner of this decision, so that the response to the non-final Office action that was received on February 11, 2008 can be processed.

Telephone inquiries regarding *this decision* should be directed to the undersigned at (571) 272-3225[1]. All other inquiries concerning examination procedures or status of the application should be directed to the Technology Center.

/Paul Shanoski/
Paul Shanoski
Senior Attorney
Office of Petitions

---

1 Petitioner will note that all practice before the Office should be in writing, and the action of the Office will be based exclusively on the written record in the Office. See 37 C.F.R. § 1.2. As such, Petitioner is reminded that no telephone discussion may be controlling or considered authority for Petitioner's further action(s).

UNITED STATES PATENT AND TRADEMARK OFFICE

COMMISSIONER FOR PATENTS
UNITED STATES PATENT AND TRADEMARK OFFICE
P.O. BOX 1450
ALEXANDRIA, VA 22313-1450
www.uspto.gov

Akin Gump Strauss Hauer & Feld LLP
One Commerce Square
2005 Market Street, Suite 2200
Philadelphia, PA 19103-7013

COPY MAILED

AUG 2 2 2005

OFFICE OF PETITIONS

In re Application of Atsushi Watanabe, et al. Application No. 10/977,880 Filed: October 29, 2004 Attorney Docket No. 600630-27US(S10310US01)	: : : : :	DECISION GRANTING PETITION

This is a decision on the petition filed April 1, 2005, requesting that the above-identified application be accorded a filing date of October 29, 2004, rather than the presently accorded date of October 30, 2004. The petition is properly treated as a petition under 37 CFR 1.10(c).

The petition is **GRANTED**.

Petitioner requests the earlier filing date on the basis that the application was purportedly deposited with Express Mail Service on October 29, 2004 pursuant to 37 CFR 1.10. While the copy of the Express Mail label receipt no. EV610007075US bears a handwritten "date-in" of October 30, 2004, it also includes a USPS receipt date stamp of October 29, 2004. Petitioner is alleging that the date of mailing shown in the "date-in" is a U. S. Postal Service (USPS) error and the correct date of mailing pursuant to 37 CFR 1.10 is October 29, 2004, as noted on the USPS receipt date stamp.

The Office considers the date the paper or fee is shown to have been deposited as "Express Mail" to be the "date-in" on the Express Mail label, MPEP 513. However, in view of the conflicting dates on the label, a search of the USPS' Express Mail Track and Confirm database was made and confirms that the package bearing Express Mail label No. EV610007075US was accepted on October 29, 2004.

This application file is being returned to the Office of Initial Patent Examination (OIPE) for **correction of the filing date to October 29, 2004 and issuance of a corrected filing receipt.**

Telephone inquiries relating to this decision should be directed to the undersigned at (571) 272-3223. Telephone inquiries related to OIPE processing should be directed to their hotline at (703) 308-1202.

Marianne E. Jenkins

Marianne E. Jenkins
Petitions Examiner
Office of Petitions

UNITED STATES DEPARTMENT OF COMMERCE
Patent and Trademark Office
ASSISTANT SECRETARY OF COMMERCE AND
COMMISSIONER OF PATENTS AND TRADEMARKS
Washington, DC 20231

6/5/09

Patent No. :7444893
Inventor(s) :James R. Gressel
Issued :11/4/2008
Title : Booster Actuator
Atty.doc./File No.

Request for Certificates of Correction

Consideration has been given to your request for the issuance of a Certificate of Correction, for the above – identified patent under the provisions of CFR 1.322.

Inspection of the application for the patent reveals col. 8 claim 23 line 44 is printed in accordance with the record and a fee of $100 is needed to make this change. Therefore being no fault on the Patent and Trademark Office, It has no authority to issue a certificate of correction under the provision of 1.322.

In view of the forgoing, your request in this matter, is hereby denied.

Future written correspondence concerning this matter should be filed and directed to Decisions & Certificates of Correction Branch.

Henry Randall
Decisions & Certificates
of Correction Branch
(703) 756-1571

Amir N. Penn
Brinks Hofer Gilson & Lione
P.O. Box 10395
Chicago, IL 60610

HR

UNITED STATES PATENT AND TRADEMARK OFFICE

UNITED STATES DEPARTMENT OF COMMERCE
United States Patent and Trademark Office
Address: COMMISSIONER FOR PATENTS
P.O. Box 1450
Alexandria, Virginia 22313-1450
www.uspto.gov

James P. Broder
Roeder & Broder LLP
9915 Mira Mesa Blvd. Suite 300
San Diego, CA 92131

Mail Date: 04/21/2010

Applicant	: Norman Ivans	: DECISION ON REQUEST FOR
Patent Number	: 7617992	: RECALCULATION of PATENT
Issue Date	: 11/17/2009	: TERM ADJUSTMENT IN VIEW
Appliction No	: 10/977,916	: OF WYETH AND NOTICE OF INTENT TO
Filed	: 10/30/2004	: ISSUE CERTIFICATE OF CORRECTION
		:

The Request for Recalculation is **GRANTED** to the extent indicated.

The patent term adjustment has been determined to be **817** days. The USPTO will *sua sponte* issue a certificate of correction reflecting the amount of PTA days determined by the recalculation.

Prior to the issuance of the certificate of correction, the USPTO will afford patentee an opportunity to be heard and request reconsideration. Accordingly, patentee has **one month or thirty (30) days**, whichever is longer, to file a request for reconsideration of this patent term adjustment calculation. See 35 U.S.C. 154(b)(3)(B)(ii) and 37 CFR 1.322(a)(4). No extensions of time will be granted under 37 CFR 1.136.

Patentee should use document code PET.OP if electronically filing a request for reconsideration of this patent term adjustment calculation. The patentee must also include the information required by 37 CFR 1.705(b)(2) and the fee required by 37 CFR 1.18(e). If patentee does not file a timely request for reconsideration of this patent term adjustment calculation including the information required by 37 CFR 1.705(b)(2) and the fee required by 37 CFR 1.18(e), the USPTO will issue a certificate of correction reflecting the PTA determination noted above.

Patentee should be aware that in order to preserve the right to review in the United States District Court for the District of Columbia of the USPTO patent term adjustment determination, patentee must ensure that he or she also take the steps required under 35 U.S.C. 154(b)(4)(A) in a timely manner. Nothing in the request for recalculation should be construed as providing an alternative time frame for commencing a civil action under 35 U.S.C. 154(b)(4)(A).

Any questions concerning this decision should be directed to the Office of Patent Legal Administration at 571-272-7702.

UNITED STATES PATENT AND TRADEMARK OFFICE

Commissioner for Patents
United States Patent and Trademark Office
P.O. Box 1450
Alexandria, VA 22313-1450
www.uspto.gov

August 2005

PAUL J. SUTTON, ESQ., BARRY G. MAGIDOFF, ESQ.
GREENBERG TRAURIG, LLP
200 PARK AVENUE
NEW YORK, NY 10166

SEP - 8 2005

In re Application of: NICHOLAS DISALVO ET AL. Serial No.: 10/977,929 Filed: 28 October 2004 Docket: 1415CIP3CON4 Title: CIRCUIT INTERRUPTING DEVICE WITH REVERSE WIRING PROTECTION	DECISION ON PETITION TO MAKE SPECIAL UNDER 37 C.F.R. § 1.102(d) [INFRINGEMENT]

This is a decision on the petition filed on October 28, 2004, to make the above-identified application special under the procedure set forth in MPEP § 708.02(II) in accordance with 37 C.F.R. § 1.102(d).

The petition to make the application special is **GRANTED**.

In support of the petition, the petition provides the requisite fee, a copy of the references deemed most closely related to the subject matter encompassed by the claims, and a statement by the applicant through his attorney.

For an application to be made special under MPEP § 708.02(II) in accordance with 37 C.F.R. §1.102(d), a petition must include the requisite petition fee, a copy of the references deemed most closely related to the subject matter encompassed by the claims, and a statement by the applicant, assignee, or an attorney/agent registered to practice before the Office alleging:

(A) That there is an infringing device of product actually on the market or method in use;

(B) That a rigid comparison of the alleged infringing device, product, or method with the claims of the application has been made, and that in his or her opinion, some of the claims are unquestionably infringed; and

(C) That he or she has made or caused to be made a careful and thorough search of the prior art or has good knowledge of the pertinent prior art.

The requirements of MPEP § 708.02(II) are considered to have been met. The application will be advanced out of turn for examination, and will continue to be treated as special throughout the entire prosecution in the Office according to the procedure set forth in MPEP § 708.02.

The application file is being forwarded to the examiner for expedited prosecution.

If the examiner finds any interfering application for the same subject matter, he/she should consider such application simultaneously with this application and should state in the official letter of such application that he/she is taking it out of its turn because of possible interference.

Should an appeal be taken in this application or should this application becomes involved in an interference, consideration of the appeal and the interference will be expedited by all Patent and Trademark Office officials concerned, contingent likewise upon diligent prosecution by the applicant.

After allowance, this application will be given priority for printing. See M.P.E.P. § 1309.

Any inquiry regarding this decision should be directed to Hien H. Phan, Special Program Examiner, at (571) 272-1606.

Hien H. Phan, Special Program Examiner
Technology Center 2800 - Semiconductors,
Electrical & Optical Systems & Components

SPE RESPONSE FOR CERTIFICATE OF CORRECTION

Paper No.: —

DATE : 5/14/09

TO SPE OF : ART UNIT 2832

SUBJECT : Request for Certificate of Correction for Appl. No.: 10/977929 Patent No.: 7463124 B2

Please respond to this request for a certificate of correction within 7 days.

FOR IFW FILES:

Please review the requested changes/corrections as shown in the **COCIN** document(s) in the IFW application image. No new matter should be introduced, nor should the scope or meaning of the claims be changed.

Please complete the response (see below) and forward the completed response to scanning using document code **COCX**.

FOR PAPER FILES:

Please review the requested changes/corrections as shown in the attached certificate of correction. Please complete this form (see below) and forward it with the file to:

Certificates of Correction Branch (C of C)
Randolph Square 9D62-B
Palm Location 7580

Virginia Tolbert
Certificates of Correction Branch
703-756-1591

Thank You For Your Assistance

The request for issuing the above-identified correction(s) is hereby:
Note your decision on the appropriate box.

- ☒ **Approved** — **All** changes apply.
- ☐ **Approved in Part** — Specify below which changes **do not** apply.
- ☐ **Denied** — State the reasons for denial below.

Comments: Certificate of Correction adds priority data to the application. /Br/

/EEnad/ SPE AU2832

SPE **Art Unit**

UNITED STATES PATENT AND TRADEMARK OFFICE

Commissioner for Patents
United States Patent and Trademark Office
P.O. Box 1450
Alexandria, VA 22313-1450
www.uspto.gov

LEVITON MANUFACTURING COMPANY INCORPORATED (CDFS)
C/O CARTER, DELUCA, FARRELL & SCHMIDT, LLP
445 BROAD HOLLOW ROAD, SUITE 420
MELVILLE, NY 11747

COPY MAILED

AUG 1 0 2009

OFFICE OF PETITIONS

In re Patent No. 7,463,124	: DECISION GRANTING PETITION
Issue Date: December 9, 2008	: UNDER 37 CFR 1.78(a)(3) AND
Application No. 10/977,929	: REQUEST FOR CERTIFICATE OF
Filed: November 1, 2004	: CORRECTION
Attorney Docket No. 1640-2 CON	:

This is a decision on the petition, filed May 7, 2009 and supplemented July 10, 2009, which is being treated as a petition under 37 CFR 1.78(a)(3), seeking to add a claim for priority under 35 U.S.C. § 120 to nonprovisional Application No. 10/977,929, filed October 28, 2004, by way of a certificate of correction.

The petition is **granted**.

A review of the file record fails to disclose that a claim for the benefit of priority to the above-noted, prior-filed nonprovisional application was made within the time period set forth in 37 CFR 1.78(a)(2)(ii) and further failed to include a proper reference to the prior-filed application as required by 37 CFR 1.78(a)(2)(i) and 1.78(a)(2)(iii).

The instant application was filed October 28, 2004. Therefore, since this application was filed after November 29, 2000, a petition under 37 CFR 1.78(a)(3), along with submission of a Certificate of Correction, is the appropriate avenue of relief to accept a late claim for the benefit of priority to a prior-filed nonprovisional application after issuance of the application into a patent. *See* MPEP 1481.

A petition for acceptance of a claim for late priority under 37 CFR 1.78(a)(3) must be accompanied by:

(1) the reference required by 35 U.S.C. § 120 and 37 CFR 1.78(a)(2)(i) of the prior-filed application, unless previously submitted;
(2) the surcharge set forth in § 1.17(t); and
(3) a statement that the entire delay between the date the claim was due under 37 CFR 1.78(a)(2)(ii) and the date the claim was filed was unintentional. The Director may

require additional information where there is a question whether the delay was unintentional.

As the petition for acceptance of an unintentionally delayed claim for the benefit of priority under 35 U.S.C. § 120 to the above-noted, prior-filed nonprovisional application satisfies the conditions of 37 CFR 1.78(a)(3), the petition is granted.

A corrected Filing Receipt, which includes the priority claim to the above-noted, prior-filed nonprovisional application, accompanies this decision on petition.

Petitioner is advised that the granting of this petition and the mailing of a corrected Filing Receipt should not be viewed as an indication that a determination has been made that this application is entitled to claim benefit of the prior-filed application. A determination that applicant is entitled to claim benefit of the prior-filed application will be made by the Examiner prior to the mailing of a certificate of correction.

As authorized, the $1,410 surcharge fee, as well as the $100 certificate of correction fee, will be charged to petitioner's Deposit Account No. 50-2638.

Any inquiries concerning this decision may be directed to April M. Wise at (571) 272-1642. All other inquiries concerning this application should be directed to Certificates of Corrections at their hotline 571-272-4200.

This application is being referred to the Certificates of Correction Branch for processing the request for a certificate of correction in accordance with this decision on the petition under 37 CFR 1.78(a)(3).

/dab/
David Bucci
Petitions Examiner
Office of Petitions

ATTACHMENT: Corrected Filing Receipt

UNITED STATES PATENT AND TRADEMARK OFFICE

UNITED STATES DEPARTMENT OF COMMERCE
United States Patent and Trademark Office
Address: COMMISSIONER FOR PATENTS
P.O. Box 1450
Alexandria, Virginia 22313-1450
www.uspto.gov

APPLICATION NUMBER	FILING or 371(c) DATE	GRP ART UNIT	FIL FEE REC'D	ATTY.DOCKET.NO	TOT CLAIMS	IND CLAIMS
10/977,929	10/28/2004	2832	3402	1640-2 CON	29	2

CONFIRMATION NO. 9739

CORRECTED FILING RECEIPT

OC000000037200768

73609
Leviton Manufacturing Company Incorporated (CDFS)
c/o Carter, DeLuca, Farrell & Schmidt, LLP
445 Broad Hollow Rd. Ste. 420
Melville, NY 11747

Date Mailed: 08/04/2009

Receipt is acknowledged of this non-provisional patent application. The application will be taken up for examination in due course. Applicant will be notified as to the results of the examination. Any correspondence concerning the application must include the following identification information: the U.S. APPLICATION NUMBER, FILING DATE, NAME OF APPLICANT, and TITLE OF INVENTION. Fees transmitted by check or draft are subject to collection. Please verify the accuracy of the data presented on this receipt. **If an error is noted on this Filing Receipt, please submit a written request for a Filing Receipt Correction. Please provide a copy of this Filing Receipt with the changes noted thereon. If you received a "Notice to File Missing Parts" for this application, please submit any corrections to this Filing Receipt with your reply to the Notice. When the USPTO processes the reply to the Notice, the USPTO will generate another Filing Receipt incorporating the requested corrections**

Applicant(s)

Nicholas L. DiSalvo, Levittown, NY;
William R. Ziegler, East Northport, NY;

Power of Attorney: The patent practitioners associated with Customer Number 73609

Domestic Priority data as claimed by applicant

This application is a CON of 10/827,093 04/19/2004 PAT 6,864,766
which is a CON of 10/223,284 08/19/2002 PAT 6,813,126
which is a CON of 09/879,563 06/11/2001 PAT 6,437,953
which is a CON of 09/379,138 08/20/1999 PAT 6,246,558
which is a CON of 09/369,759 08/06/1999 PAT 6,282,070
which is a CIP of 09/138,955 08/24/1998 PAT 6,040,967

Foreign Applications

If Required, Foreign Filing License Granted: 12/13/2004

The country code and number of your priority application, to be used for filing abroad under the Paris Convention, is **US 10/977,929**

Projected Publication Date: Not Applicable

Non-Publication Request: No

Early Publication Request: No

Title

CIRCUIT INTERRUPTING DEVICE WITH REVERSE WIRING PROTECTION

Preliminary Class

335

PROTECTING YOUR INVENTION OUTSIDE THE UNITED STATES

Since the rights granted by a U.S. patent extend only throughout the territory of the United States and have no effect in a foreign country, an inventor who wishes patent protection in another country must apply for a patent in a specific country or in regional patent offices. Applicants may wish to consider the filing of an international application under the Patent Cooperation Treaty (PCT). An international (PCT) application generally has the same effect as a regular national patent application in each PCT-member country. The PCT process **simplifies** the filing of patent applications on the same invention in member countries, but **does not result** in a grant of "an international patent" and does not eliminate the need of applicants to file additional documents and fees in countries where patent protection is desired.

Almost every country has its own patent law, and a person desiring a patent in a particular country must make an application for patent in that country in accordance with its particular laws. Since the laws of many countries differ in various respects from the patent law of the United States, applicants are advised to seek guidance from specific foreign countries to ensure that patent rights are not lost prematurely.

Applicants also are advised that in the case of inventions made in the United States, the Director of the USPTO must issue a license before applicants can apply for a patent in a foreign country. The filing of a U.S. patent application serves as a request for a foreign filing license. The application's filing receipt contains further information and guidance as to the status of applicant's license for foreign filing.

Applicants may wish to consult the USPTO booklet, "General Information Concerning Patents" (specifically, the section entitled "Treaties and Foreign Patents") for more information on timeframes and deadlines for filing foreign patent applications. The guide is available either by contacting the USPTO Contact Center at 800-786-9199, or it can be viewed on the USPTO website at http://www.uspto.gov/web/offices/pac/doc/general/index.html.

For information on preventing theft of your intellectual property (patents, trademarks and copyrights), you may wish to consult the U.S. Government website, http://www.stopfakes.gov. Part of a Department of Commerce initiative, this website includes self-help "toolkits" giving innovators guidance on how to protect intellectual property in specific countries such as China, Korea and Mexico. For questions regarding patent enforcement issues, applicants may call the U.S. Government hotline at 1-866-999-HALT (1-866-999-4158).

LICENSE FOR FOREIGN FILING UNDER

Title 35, United States Code, Section 184

Title 37, Code of Federal Regulations, 5.11 & 5.15

GRANTED

The applicant has been granted a license under 35 U.S.C. 184, if the phrase "IF REQUIRED, FOREIGN FILING LICENSE GRANTED" followed by a date appears on this form. Such licenses are issued in all applications where the conditions for issuance of a license have been met, regardless of whether or not a license may be required as

set forth in 37 CFR 5.15. The scope and limitations of this license are set forth in 37 CFR 5.15(a) unless an earlier license has been issued under 37 CFR 5.15(b). The license is subject to revocation upon written notification. The date indicated is the effective date of the license, unless an earlier license of similar scope has been granted under 37 CFR 5.13 or 5.14.

This license is to be retained by the licensee and may be used at any time on or after the effective date thereof unless it is revoked. This license is automatically transferred to any related applications(s) filed under 37 CFR 1.53(d). This license is not retroactive.

The grant of a license does not in any way lessen the responsibility of a licensee for the security of the subject matter as imposed by any Government contract or the provisions of existing laws relating to espionage and the national security or the export of technical data. Licensees should apprise themselves of current regulations especially with respect to certain countries, of other agencies, particularly the Office of Defense Trade Controls, Department of State (with respect to Arms, Munitions and Implements of War (22 CFR 121-128)); the Bureau of Industry and Security, Department of Commerce (15 CFR parts 730-774); the Office of Foreign AssetsControl, Department of Treasury (31 CFR Parts 500+) and the Department of Energy.

NOT GRANTED

No license under 35 U.S.C. 184 has been granted at this time, if the phrase "IF REQUIRED, FOREIGN FILING LICENSE GRANTED" DOES NOT appear on this form. Applicant may still petition for a license under 37 CFR 5.12, if a license is desired before the expiration of 6 months from the filing date of the application. If 6 months has lapsed from the filing date of this application and the licensee has not received any indication of a secrecy order under 35 U.S.C. 181, the licensee may foreign file the application pursuant to 37 CFR 5.15(b).

UNITED STATES PATENT AND TRADEMARK OFFICE

COMMISSIONER FOR PATENTS
UNITED STATES PATENT AND TRADEMARK OFFICE
P.O. BOX 1450
ALEXANDRIA, VA 22313-1450
www.uspto.gov

MARK E. NUSBAUM
NIXON & VANDERHYE, PC
901 NORTH GLEBE ROAD, 11TH FLOOR
ARLINGTON, VA 22203

COPY MAILED

NOV 09 2006

OFFICE OF PETITIONS

In re Application of	:	
Howard T. Jacobs, et al.	:	
Application No. 10/977,938	:	DECISION ON REQUEST
Filed: November 1, 2004	:	TO WITHDRAW
Attorney Docket No. 227-157	:	FROM RECORD
	:	

This is a decision on the Request to Withdraw as attorney or agent of record under 37 CFR §1.36(b), filed August 19, 2005.

The request is **NOT APPROVED** as moot.

A review of the file record indicates that the power of attorney to Mark E. Nusbaum and all the other attorneys/agents associated with Customer Number 23117 was revoked by the assignee of the patent application on October 17, 2005. Accordingly, the request to withdraw under 37 CFR § 1.36(b) is moot.

All future communications from the Office will continue to be directed to the below-listed address until otherwise notified by applicant.

There is no outstanding Office action that requires a reply from the applicant.

Telephone inquires concerning this decision should be directed to the undersigned at (571) 272-3204.

Sherry D. Brinkley
Petitions Examiner
Office of Petitions

cc: ALSTON & BIRD LLP
BANK OF AMERICA PLAZA
101 SOUTH TRYON STREET, SUITE 4000
CHARLOTTE, NC 28280-4000

UNITED STATES PATENT AND TRADEMARK OFFICE

Commissioner for Patents
United States Patent and Trademark Office
P.O. Box 1450
Alexandria, VA 22313-1450
www.uspto.gov

DONALD W. MEEKER
PATENT AGENT
924 EAST OCEAN FRONT #E
NEWPORT BEACH, CA 92661

COPY MAILED

MAY 23 2007

OFFICE OF PETITIONS

In re Application of	:	
Donovan Ruddock	:	
Application No. 10/977,950	:	ON PETITION
Filed: October 29, 2004	:	
Attorney Docket No.	:	

This is a decision on the petition filed December 19, 2006 under 37 CFR 1.137(b), to revive the above-identified application.

The petition is **GRANTED.**

The above-identified application became abandoned for failure to submit the Issue fee and Publication fee in a timely manner in reply to the Notice of Allowance mailed May 17, 2006, which set a statutory period for reply of three (3) months. Accordingly, the above-identified application became abandoned on August 18, 2006.

The petition satisfies the conditions for revival pursuant to the provisions of 37 CFR 1.137(b) in that (1) the reply in the form of payment of the Issue fee and Publication fee; (2) the petition fee; and (3) the required statement of unintentional delay have been received. Accordingly, the issue fee is accepted as having been unintentionally delayed.

Telephone inquiries concerning this decision should be directed to the undersigned at (571) 272-3210.

This matter is being referred to the Publishing Division for further processing.

Irvin Dingle
Petitions Examiner
Office of Petitions

UNITED STATES PATENT AND TRADEMARK OFFICE

Commissioner for Patents
United States Patent and Trademark Office
P.O. Box 1450
Alexandria, VA 22313-1450
www.uspto.gov

Amir N. Penn
Brinks Hofer Gilson & Lione
P.O. Box 10395
Chicago IL 60610

COPY MAILED

FEB 0 5 2007

OFFICE OF PETITIONS

In re Application of
Gressel
Application No. 10/977,981
Filed: October 29, 2004
Attorney Docket No. 12715-15

DECISION ON PETITION
UNDER 37 CFR 1.78(a)(3)

This is a decision on the petition under 37 CFR 1.78(a)(3), filed September 26, 2006, to accept an unintentionally delayed claim under 35 U.S.C. § 120 for the benefit of priority to the prior-filed nonprovisional application set forth in the amendment filed with the petition.

The petition is **GRANTED**.

A petition for acceptance of a claim for late priority under 37 CFR 1.78(a)(3) is only applicable to those applications filed on or after November 29, 2000. Further, the petition is appropriate only after the expiration of the period specified in 37 CFR 1.78(a)(2)(ii). In addition, the petition under 37 CFR 1.78(a)(3) must be accompanied by:

(1) the reference required by 35 U.S.C. § 120 and 37 CFR 1.78(a)(2)(i) of the prior-filed application, unless previously submitted;
(2) the surcharge set forth in § 1.17(t); and
(3) a statement that the entire delay between the date the claim was due under 37 CFR 1.78(a)(2)(ii) and the date the claim was filed was unintentional. The Director may require additional information where there is a question whether the delay was unintentional.

All of the above requirements having been satisfied, the late claim for priority under 35 U.S.C. § 120 is accepted as being unintentionally delayed.

The granting of the petition to accept the delayed benefit claim to the prior-filed application under 37 CFR 1.78(a)(3) should not be construed as meaning that this application is entitled to the benefit of the prior-filed application. In order for this application to be entitled to the benefit of the prior-filed application, all other requirements under 35 U.S.C. § 120 and 37

CFR 1.78(a)(1) and (a)(2) must be met. Similarly, the fact that the corrected Filing Receipt accompanying this decision on petition includes the prior-filed application should not be construed as meaning that applicant is entitled to the claim for benefit of priority to the prior-filed application noted thereon. Accordingly, the examiner will, in due course, consider this benefit claim and determine whether the application is entitled to the benefit of the earlier filing date.

A corrected Filing Receipt, which includes the priority claim to the prior-filed nonprovisional application, accompanies this decision on petition.

Any inquiries concerning this decision may be directed to the undersigned at (571) 272-3230. All other inquiries concerning either the examination procedures or status of the application should be directed to the Technology Center.

This application is being forwarded to Technology Center Art Unit 3682 for consideration by the examiner of applicant's entitlement to claim benefit of priority under 35 U.S.C. § 120 to the prior-filed application.

Shirene Willis Brantley

Shirene Willis Brantley
Senior Petitions Attorney
Office of Petitions

ATTACHMENT: Corrected Filing Receipt

UNITED STATES PATENT AND TRADEMARK OFFICE

UNITED STATES DEPARTMENT OF COMMERCE
United States Patent and Trademark Office
Address: COMMISSIONER FOR PATENTS
P.O. Box 1450
Alexandria, Virginia 22313-1450
www.uspto.gov

APPL NO.	FILING OR 371 (c) DATE	ART UNIT	FIL FEE REC'D	ATTY.DOCKET NO	DRAWINGS	TOT CLMS	IND CLMS
10/977,981	10/29/2004	3682	2340	12715-15	6	20	3

CONFIRMATION NO. 9350

CORRECTED FILING RECEIPT

OC000000022290633

Amir N. Penn
Brinks Hofer Gilson & Lione
P.O. Box 10395
Chicago, IL 60610

Date Mailed: 02/01/2007

Receipt is acknowledged of this regular Patent Application. It will be considered in its order and you will be notified as to the results of the examination. Be sure to provide the U.S. APPLICATION NUMBER, FILING DATE, NAME OF APPLICANT, and TITLE OF INVENTION when inquiring about this application. Fees transmitted by check or draft are subject to collection. Please verify the accuracy of the data presented on this receipt. **If an error is noted on this Filing Receipt, please mail to the Commissioner for Patents P.O. Box 1450 Alexandria Va 22313-1450. Please provide a copy of this Filing Receipt with the changes noted thereon. If you received a "Notice to File Missing Parts" for this application, please submit any corrections to this Filing Receipt with your reply to the Notice. When the USPTO processes the reply to the Notice, the USPTO will generate another Filing Receipt incorporating the requested corrections (if appropriate).**

Applicant(s)

James R. Gressel, Menominee, MI;

Power of Attorney:

Rodney Daniel--31605
Amir Penn--40767
John Nethery--42928

Domestic Priority data as claimed by applicant

This application is a CON of 10/800,520 03/15/2004 PAT 7,021,166
which is a DIV of 09/907,195 07/17/2001 PAT 6,722,216

Foreign Applications

If Required, Foreign Filing License Granted: 02/01/2007

The country code and number of your priority application, to be used for filing abroad under the Paris Convention, is US10/977,981

Projected Publication Date: Not Applicable

Non-Publication Request: No

Early Publication Request: No

Preliminary Class

074

PROTECTING YOUR INVENTION OUTSIDE THE UNITED STATES

Since the rights granted by a U.S. patent extend only throughout the territory of the United States and have no effect in a foreign country, an inventor who wishes patent protection in another country must apply for a patent in a specific country or in regional patent offices. Applicants may wish to consider the filing of an international application under the Patent Cooperation Treaty (PCT). An international (PCT) application generally has the same effect as a regular national patent application in each PCT-member country. The PCT process **simplifies** the filing of patent applications on the same invention in member countries, but **does not result** in a grant of "an international patent" and does not eliminate the need of applicants to file additional documents and fees in countries where patent protection is desired.

Almost every country has its own patent law, and a person desiring a patent in a particular country must make an application for patent in that country in accordance with its particular laws. Since the laws of many countries differ in various respects from the patent law of the United States, applicants are advised to seek guidance from specific foreign countries to ensure that patent rights are not lost prematurely.

Applicants also are advised that in the case of inventions made in the United States, the Director of the USPTO must issue a license before applicants can apply for a patent in a foreign country. The filing of a U.S. patent application serves as a request for a foreign filing license. The application's filing receipt contains further information and guidance as to the status of applicant's license for foreign filing.

Applicants may wish to consult the USPTO booklet, "General Information Concerning Patents" (specifically, the section entitled "Treaties and Foreign Patents") for more information on timeframes and deadlines for filing foreign patent applications. The guide is available either by contacting the USPTO Contact Center at 800-786-9199, or it can be viewed on the USPTO website at http://www.uspto.gov/web/offices/pac/doc/general/index.html.

For information on preventing theft of your intellectual property (patents, trademarks and copyrights), you may wish to consult the U.S. Government website, http://www.stopfakes.gov. Part of a Department of Commerce initiative, this website includes self-help "toolkits" giving innovators guidance on how to protect intellectual property in specific countries such as China, Korea and Mexico. For questions regarding patent enforcement issues, applicants may call the U.S. Government hotline at 1-866-999-HALT (1-866-999-4158).

LICENSE FOR FOREIGN FILING UNDER

Title 35, United States Code, Section 184

Title 37, Code of Federal Regulations, 5.11 & 5.15

GRANTED

The applicant has been granted a license under 35 U.S.C. 184, if the phrase "IF REQUIRED, FOREIGN FILING LICENSE GRANTED" followed by a date appears on this form. Such licenses are issued in all applications where the conditions for issuance of a license have been met, regardless of whether or not a license may be required as set forth in 37 CFR 5.15. The scope and limitations of this license are set forth in 37 CFR 5.15(a) unless an earlier license has been issued under 37 CFR 5.15(b). The license is subject to revocation upon written notification. The date indicated is the effective date of the license, unless an earlier license of similar scope has been granted under 37 CFR 5.13 or 5.14.

This license is to be retained by the licensee and may be used at any time on or after the effective date thereof unless it is revoked. This license is automatically transferred to any related applications(s) filed under 37 CFR 1.53(d). This license is not retroactive.

The grant of a license does not in any way lessen the responsibility of a licensee for the security of the

subject matter as imposed by any Government contract or the provisions of existing laws relating to espionage and the national security or the export of technical data. Licensees should apprise themselves of current regulations especially with respect to certain countries, of other agencies, particularly the Office of Defense Trade Controls, Department of State (with respect to Arms, Munitions and Implements of War (22 CFR 121-128)); the Bureau of Industry and Security, Department of Commerce (15 CFR parts 730-774); the Office of Foreign AssetsControl, Department of Treasury (31 CFR Parts 500+) and the Department of Energy.

NOT GRANTED

No license under 35 U.S.C. 184 has been granted at this time, if the phrase "IF REQUIRED, FOREIGN FILING LICENSE GRANTED" DOES NOT appear on this form. Applicant may still petition for a license under 37 CFR 5.12, if a license is desired before the expiration of 6 months from the filing date of the application. If 6 months has lapsed from the filing date of this application and the licensee has not received any indication of a secrecy order under 35 U.S.C. 181, the licensee may foreign file the application pursuant to 37 CFR 5.15(b).

UNITED STATES PATENT AND TRADEMARK OFFICE

COMMISSIONER FOR PATENTS
UNITED STATES PATENT AND TRADEMARK OFFICE
P.O. BOX 1450
ALEXANDRIA, VA 22313-1450
www.uspto.gov

BOND, SCHOENECK & KING, PLLC
ONE LINCOLN CENTER
SYRACUSE, NY 13202-1355

COPY MAILED

JUN 2 0 2008

OFFICE OF PETITIONS

In re Application of	:	
Douglas J. Nelson, et. al.	:	
Application No. 10/977,989	:	DECISION ON PETITION
Filed: October 29, 2004	:	
Attorney Docket No. 305P001(A)	:	

This is a decision on the petition under 37 CFR 1.137(b), filed on November 13, 2007, to revive the above-identified application.

The application became abandoned for failure to file a proper response the final Office action mailed September 28, 2006. A Notice of Abandonment was mailed on August 14, 2007.

The petition satisfies the requirements of 37 CFR 1.137(b) in that petitioner has supplied (1) the reply in the form of a Request for Continued Examination (RCE) under 37 CFR 1.114 with the $405 filing fee and an amendment; (2) the petition fee of $770; and (3) a proper statement of unintentional delay. Therefore, the petition is **GRANTED**.

This application is being revived for consideration of the RCE.

The application file is being referred to Technology Center Art Unit 1724 for further processing.

Telephone inquiries concerning this decision should be directed to the undersigned at (571) 272-3226.

Andrea Smith
Petitions Examiner
Office of Petitions

UNITED STATES PATENT AND TRADEMARK OFFICE

UNITED STATES DEPARTMENT OF COMMERCE
United States Patent and Trademark Office
Address: COMMISSIONER FOR PATENTS
P.O. Box 1450
Alexandria, Virginia 22313-1450
www.uspto.gov

HONEYWELL/UOP
PATENT SERVICES
101 COLUMBIA DRIVE
P O BOX 2245 MAIL STOP AB/2B
MORRISTOWN, NJ 07962

Mail Date: 04/20/2010

Applicant	: Gregory J. Lewis	: DECISION ON REQUEST FOR
Patent Number	: 7578993	: RECALCULATION of PATENT
Issue Date	: 08/25/2009	: TERM ADJUSTMENT IN VIEW
Appliction No	: 10/978,001	: OF WYETH AND NOTICE OF INTENT TO
Filed	: 10/29/2004	: ISSUE CERTIFICATE OF CORRECTION
		:

The Request for Recalculation is **GRANTED** to the extent indicated.

The patent term adjustment has been determined to be **907** days. The USPTO will *sua sponte* issue a certificate of correction reflecting the amount of PTA days determined by the recalculation.

Prior to the issuance of the certificate of correction, the USPTO will afford patentee an opportunity to be heard and request reconsideration. Accordingly, patentee has **one month or thirty (30) days**, whichever is longer, to file a request for reconsideration of this patent term adjustment calculation. See 35 U.S.C. 154(b)(3)(B)(ii) and 37 CFR 1.322(a)(4). No extensions of time will be granted under 37 CFR 1.136.

Patentee should use document code PET.OP if electronically filing a request for reconsideration of this patent term adjustment calculation. The patentee must also include the information required by 37 CFR 1.705(b)(2) and the fee required by 37 CFR 1.18(e). If patentee does not file a timely request for reconsideration of this patent term adjustment calculation including the information required by 37 CFR 1.705(b)(2) and the fee required by 37 CFR 1.18(e), the USPTO will issue a certificate of correction reflecting the PTA determination noted above.

Patentee should be aware that in order to preserve the right to review in the United States District Court for the District of Columbia of the USPTO patent term adjustment determination, patentee must ensure that he or she also take the steps required under 35 U.S.C. 154(b)(4)(A) in a timely manner. Nothing in the request for recalculation should be construed as providing an alternative time frame for commencing a civil action under 35 U.S.C. 154(b)(4)(A).

Any questions concerning this decision should be directed to the Office of Patent Legal Administration at 571-272-7702.

UNITED STATES PATENT AND TRADEMARK OFFICE

Commissioner for Patents
United States Patent and Trademark Office
P.O. Box 1450
Alexandria, VA 22313-1450
www.uspto.gov

Lisa K. Jorgenson, Esq.
STMicroelectronics, Inc.
MS 2346
1310 Electronics Drive
Carrollton TX 75006

COPY MAILED

APR 28 2005

OFFICE OF PETITIONS

In re Application of
Tham, et al.
Application No. 10/978,015
Filed: October 28, 2004
Attorney Docket No. 04-DS-085
For: RADIO FREQUENCY ENVELOPE APPARATUS AND METHOD

DECISION ACCORDING STATUS UNDER 37 CFR 1.47(a)

This is in response to the petition under 37 CFR 1.47(a), filed April 12, 2005 (certificate of mailing date April 8, 2005).

The petition is granted.

Petitioner has shown that the non-signing inventors, Andrew Tham and Jason Rupert Redgrave, have constructively refused to join in the filing of the above-identified application after having been presented with the application papers. Specifically, the statements of facts of Attorney William A Munck and Senior Paralegal Terri L. Massengale establish that the inventors received the application papers, including the specification, claims and drawings, but each failed to respond to the request that he sign the declaration. Petitioners have submitted a declaration in compliance with 37 CFR 1.63 and 1.64.

This application and papers have been reviewed and found in compliance with 37 CFR 1.47(a). This application is hereby accorded Rule 1.47(a) status.

As provided in Rule 1.47(c), this Office will forward notice of this application's filing to the non-signing inventor at the address given in the petition. Notice of the filing of this application will also be published in the Official Gazette.

After this decision is mailed, the above-identified application will be forwarded to the Office of Initial Patent Examination for further processing.

Telephone inquiries should be directed to the undersigned at (571) 272-3230.

E Shirene Willis

E. Shirene Willis
Senior Petitions Attorney
Office of Petitions

UNITED STATES PATENT AND TRADEMARK OFFICE

Commissioner for Patents
United States Patent and Trademark Office
P.O. Box 1450
Alexandria, VA 22313-1450
www.uspto.gov

ANDREW THAM
13549 BIDWELL CT.
SAN DIEGO, CA 92129

COPY MAILED

APR 28 2005

OFFICE OF PETITIONS

In re Application of :
Tham, et al. :
Application No. 10/978,015 :
Filed: October 28, 2004 :
Attorney Docket No. 04-DS-085 :
For: RADIO FREQUENCY ENVELOPE APPARATUS AND METHOD

LETTER

Dear Mr. Tham:

You are named as a joint inventor in the above identified United States patent application, filed under the provisions of 35 U.S.C. 116 (United States Code), and 37 CFR 1.47(a), Rules of Practice in Patent Cases. Should a patent be granted on the application you will be designated therein as a joint inventor.

As a named inventor you are entitled to inspect any paper in the file wrapper of the application, order copies of all or any part thereof (at a prepaid cost per 37 CFR 1.19) or make your position of record in the application. Alternatively, you may arrange to do any of the preceding through a registered patent attorney or agent presenting written authorization from you. If you care to join the application, counsel of record (see below) would presumably assist you. Joining in the application would entail the filing of an appropriate oath or declaration by you pursuant to 37 CFR 1.63.

Requests for information regarding your application should be directed to the File Information Unit at (703)308-2733. Information regarding how to pay for and order a copy of the application, or a specific paper in the application, should be directed to Certification Division at (703)308-9726 or 1(800)972-6382 (outside the Washington D.C. area).

Telephone inquiries regarding this communication should be directed to the undersigned at (571) 272-3230.

E. Shirene Willis
Senior Petitions Attorney
Office of Petitions

ATTORNEY OF RECORD: Lisa K. Jorgenson, Esq.
STMicroelectronics, Inc.
MS 2346
1310 Electronics Drive
Carrollton, TX 75006

UNITED STATES PATENT AND TRADEMARK OFFICE

Commissioner for Patents
United States Patent and Trademark Office
P.O. Box 1450
Alexandria, VA 22313-1450
www.uspto.gov

JASON RUPERT REDGRAVE
278 MARTENS AVENUE
MOUNTAIN VIEW, CA 94040

COPY MAILED
APR 28 2005
OFFICE OF PETITIONS

In re Application of :
Tham, et al. :
Application No. 10/978,015 : LETTER
Filed: October 28, 2004 :
Attorney Docket No. 04-DS-085 :
For: RADIO FREQUENCY ENVELOPE APPARATUS AND METHOD

Dear Mr. Redgrave:

You are named as a joint inventor in the above identified United States patent application, filed under the provisions of 35 U.S.C. 116 (United States Code), and 37 CFR 1.47(a), Rules of Practice in Patent Cases. Should a patent be granted on the application you will be designated therein as a joint inventor.

As a named inventor you are entitled to inspect any paper in the file wrapper of the application, order copies of all or any part thereof (at a prepaid cost per 37 CFR 1.19) or make your position of record in the application. Alternatively, you may arrange to do any of the preceding through a registered patent attorney or agent presenting written authorization from you. If you care to join the application, counsel of record (see below) would presumably assist you. Joining in the application would entail the filing of an appropriate oath or declaration by you pursuant to 37 CFR 1.63.

Requests for information regarding your application should be directed to the File Information Unit at (703)308-2733. Information regarding how to pay for and order a copy of the application, or a specific paper in the application, should be directed to Certification Division at (703)308-9726 or 1(800)972-6382 (outside the Washington D.C. area).

Telephone inquiries regarding this communication should be directed to the undersigned at (571) 272-3230.

E Shirene Willis

E. Shirene Willis
Senior Petitions Attorney
Office of Petitions

ATTORNEY OF RECORD: Lisa K. Jorgenson, Esq.
STMicroelectronics, Inc.
MS 2346
1310 Electronics Drive
Carrollton, TX 75006

UNITED STATES PATENT AND TRADEMARK OFFICE

Commissioner for Patents
United States Patent and Trademark Office
P.O. Box 1450
Alexandria, VA 22313-1450
www.uspto.gov

HELLER EHRMAN LLP
275 MIDDLEFIELD ROAD
MENLO PARK CA 94025-3506

COPY MAILED

MAY 11 2007

OFFICE OF PETITIONS

In re Patent No. 7,129,051	:	
Application No. 10/978,033	:	
Filed: October 29, 2004	:	ON PETITION
Issued: October 31, 2006	:	
Attorney Docket No. 39766-0106 C1C1	:	

This is a decision on the petition filed February 13, 2007, which is being treated as a request under 37 CFR 3.81(b)[1] to add the names of the assignees to the front page of the above-identified patent by way of a Certificate of Correction.

The request is **GRANTED**.

The $100 Certificate of Correction fee will be charged to petitioner's deposit account as authorized.

This matter is being referred to the Certificates of Correction Branch for issuance of the requested Certificate of Correction.

Telephone inquiries concerning this decision may be directed to Petitions Examiner Liana Walsh at (571) 272-3206. Inquiries regarding the issuance of a certificate of correction should be directed to the Certificate of Correction Branch at (571) 272-4200.

Frances Hicks
Petitions Examiner
Office of Petitions

[1] *See* MPEP 1309, subsection II; and Official Gazette of June 22, 2004.

UNITED STATES PATENT AND TRADEMARK OFFICE

Commissioner for Patents
United States Patent and Trademark Office
P.O. Box 1450
Alexandria, VA 22313-1450
www.uspto.gov

MAR 30 2005

In re Application of	:	
Bossiz Harris et al.	:	DECISION ON PETITION
Serial No. 10/978,064	:	TO MAKE SPECIAL
Filed: October 30, 2004	:	
For: BOOT FOR APPLYING MEDICINES	:	

Applicants' petition, filed October 30, 2004, seeks to have this application made special based upon applicant's age.

The petition is DENIED.

An application may be made special upon filing a petition including any evidence showing that the applicant is 65 years of age or more. Applicants' petition has been reviewed and been found to not be in compliance with the requirements for special status as set forth in Section 708.02 (IV) of the Manual of Patent Examining Procedures (MPEP).

PETITION DENIED.

E. R. Kazenske, Director
Technology Center 3700

Charles C. McCloskey
763 South New Ballas Road
St. Louis, MO 63141

UNITED STATES PATENT AND TRADEMARK OFFICE

Commissioner for Patents
United States Patent and Trademark Office
P.O. Box 1450
Alexandria, VA 22313-1450
www.uspto.gov
DIW Jul-07

MICHAEL I. KROLL
171 STILLWELL LANE
SYOSSET NY 11791

COPY MAILED

JUL 30 2007

OFFICE OF PETITIONS

In re Application of	:	
Shellyann S. Milligan	:	DECISION ON PETITION
Application Number: 10/978075	:	
Filing Date: 10/28/2004	:	
Attorney Docket Number: SM-1-AM	:	

This is a decision on the petition, filed on 2 April, 2007, under 37 CFR 1.137(f) which is treated as a petition to revive the above-identified nonprovisional application under the unintentional provisions of 37 CFR 1.137(b).

The petition is **GRANTED**.

Petitioner states that the present nonprovisional application is the subject of a foreign or international application filed on 26 November, 2004. However, the U.S. Patent and Trademark Office was unintentionally not notified of this filing within 45 days subsequent to the filing of the subject application in a foreign country.

In view of the above, this application became abandoned pursuant to 35 U.S.C. § 122(b)(2)(B)(iii) and 37 CFR 1.213(c) for failure to timely notify the Office of the filing of an application in a foreign country, or under a multilateral international agreement, that requires publication of applications 18 months after filing.

A petition under 37 CFR 1.137(f) must be accompanied by:

(1) the reply which is met by the notification of such filing in a foreign country or under a multinational treaty;
(2) the petition fee as set forth in 37 CFR 1.17(m); and

(3) a statement that the entire delay in filing the required reply from the due date of the reply until the filing of a grantable petition was unintentional.

The present petition has been found to be in compliance with 37 CFR 1.137(f). Accordingly, the failure to timely notify the Office of a foreign or international filing within 45 days after the date of filing of such foreign or international application as provided by 35 U.S.C. § 122(b)(2)(B)(i) has been rescinded.

A Communication Regarding Rescission of Nonpublication Request and/or Notice of Foreign Filing, which sets forth the projected publication date of 8 November, 2007, is enclosed herewith.

The application is being referred to the Office of Patent Publication for further processing.

Any inquiries concerning this decision may be directed to the undersigned at 571.272.3231.

D Wood

Douglas I. Wood
Senior Petitions Attorney
Office of Petitions

Encl: Communication Regarding Rescission of Nonpublication Request and/or Notice of Foreign Filing

UNITED STATES PATENT AND TRADEMARK OFFICE

UNITED STATES DEPARTMENT OF COMMERCE
United States Patent and Trademark Office
Address: COMMISSIONER FOR PATENTS
P.O. Box 1450
Alexandria, Virginia 22313-1450
www.uspto.gov

APPLICATION NUMBER	FILING/RECEIPT DATE	FIRST NAMED APPLICANT	ATTY. DOCKET NO.
10/978,075	10/28/2004	ShellyAnn S. Milligan	SM-1-AM

CONFIRMATION NO. 8786

Michael I. Kroll
171 Stillwell Lane
Syosset, NY 11791

Date Mailed: 07/30/2007

Communication Regarding Rescission Of Nonpublication Request and/or Notice of Foreign Filing

Applicant's rescission of the previously-filed nonpublication request and/or notice of foreign filing is acknowledged. The paper has been reflected in the Patent and Trademark Office's (USPTO's) computer records so that the earliest possible projected publication date can be assigned.

The projected publication date is 11/08/2007.

If applicant rescinded the nonpublication request before or on the date of "foreign filing,"[1] then no notice of foreign filing is required.

If applicant foreign filed the application after filing the above application and before filing the rescission, and the rescission did not also include a notice of foreign filing, then a notice of foreign filing (not merely a rescission) is required to be filed within 45 days of the date of foreign filing. See 35 U.S.C. § 122(b)(2)(B)(iii), and Clarification of the United States Patent and Trademark Office's Interpretation of the Provisions of 35 U.S.C. § 122(b)(2)(B)(ii)-(iv), 1272 Off. Gaz. Pat. Office 22 (July 1, 2003).

If a notice of foreign filing is required and is not filed within 45 days of the date of foreign filing, then the application becomes abandoned pursuant to 35 U.S.C. § 122(b)(2)(B)(iii). In this situation, applicant should either file a petition to revive or notify the Office that the application is abandoned. See 37 CFR 1.137(f). Any such petition to revive will be forwarded to the Office of Petitions for a decision. Note that the filing of the petition will not operate to stay any period of reply that may be running against the application.

Questions regarding petitions to revive should be directed to the Office of Petitions at (571) 272-3282. Questions regarding publications of patent applications should be directed to the patent application publication hotline at (703) 605-4283 or by e-mail pgpub@uspto.gov.

[1] Note, for purpose of this notice, that "foreign filing" means "filing an application directed to the same invention in another country, or under a multilateral international agreement, that requires publication of applications 18 months after filing".

UNITED STATES PATENT AND TRADEMARK OFFICE

Commissioner for Patents
United States Patent and Trademark Office
P.O. Box 1450
Alexandria, VA 22313-1450
www.uspto.gov

DENNIS WINN
ORSCHELN MANAGEMENT COMPANY
2000 U.S. HIGHWAY 63 SOUTH
P.O. BOX 280
MOBERLY, MO 65270

COPY MAILED

APR 0 3 2008

OFFICE OF PETITIONS

In re Application of :
Donald W. TAYLOR :
Application No. 10/978,081 : DECISION ON PETITION
Filed: October 27, 2004 :
Attorney Docket No.DE010DT-2 :

This is a decision on the petition under the unintentional provisions of 37 CFR 1.137(b), filed October 9, 2007, to revive the above-identified application.

The petition is **GRANTED**.

The application became abandoned for failure to reply in a timely manner to the non-final Office action mailed, January 10, 2007, which set a shortened statutory period for reply of three (3) months. No extensions of time under the provisions of 37 CFR 1.136(a) were obtained. Accordingly, the application became abandoned on April 11, 2007.

The petition satisfies the requirements of 37 CFR 1.137(b) in that petitioner has supplied (1) the reply in the form of an amendment, (2) the petition fee of $1,540; and (3) an adequate statement of unintentional delay.

It is not apparent whether the person signing the statement of unintentional delay was in a position to have firsthand or direct knowledge of the facts and circumstances of the delay at issue. Nevertheless, such statement is being treated as having been made as the result of a reasonable inquiry into the facts and circumstances of such delay. See 37 CFR 10.18(b) and Changes to Patent Practice and Procedure; Final Rule Notice, 62 Fed. Reg. 53131, 53178 (October 10, 1997), 1203 Off. Gaz. Pat. Office 63, 103 (October 21, 1997). In the event that such an inquiry has not been made, petitioner must make such an inquiry. If such inquiry results in the discovery that it is not correct that the entire delay in filing the required reply from the due date for the reply until the filing of a grantable petition pursuant to 37 CFR 1.137(b) was unintentional, petitioner must notify the Office.

Telephone inquiries concerning this decision should be directed to Diane Goodwyn at (571) 272-6735.

This application is being referred to Technology Center AU 1713 for appropriate action by the Examiner in the normal course of business on the reply received October 9, 2007.

April Wise
Petitions Examiner
Office of Petitions

UNITED STATES PATENT AND TRADEMARK OFFICE

UNITED STATES DEPARTMENT OF COMMERCE
United States Patent and Trademark Office
Address: COMMISSIONER FOR PATENTS
P.O. Box 1450
Alexandria, Virginia 22313-1450
www.uspto.gov

APPLICATION NUMBER	FILING OR 371(C) DATE	FIRST NAMED APPLICANT	ATTY. DOCKET NO./TITLE
10/978,081	10/27/2004	Donald W. Taylor	DE010DT-2

CONFIRMATION NO. 8784

POA ACCEPTANCE LETTER

DENIS WINN
ORSCHELM MANAGEMENT COMPANY
2000 U.S. HIGHWAY 63 SOUTH
P.O. BOX 280
MOBERLY, MO 65270

OC000000028658548

Date Mailed: 03/17/2008

NOTICE OF ACCEPTANCE OF POWER OF ATTORNEY

This is in response to the Power of Attorney filed 10/09/2007.

The Power of Attorney in this application is accepted. Correspondence in this application will be mailed to the above address as provided by 37 CFR 1.33.

/dcgoodwyn/

Office of Initial Patent Examination (571) 272-4000 or 1-800-PTO-9199

UNITED STATES PATENT AND TRADEMARK OFFICE

COMMISSIONER FOR PATENTS
UNITED STATES PATENT AND TRADEMARK OFFICE
P.O. BOX 1450
ALEXANDRIA, VA 22313-1450
www.uspto.gov

Paper No.

NOVO NORDISK, INC.
PATENT DEPARTMENT
100 COLLEGE ROAD WEST
PRINCETON NJ 08540

COPY MAILED

MAR 0 4 2008

OFFICE OF PETITIONS

In re Application of	:	
Svend Havelund	:	DECISION ON PETITION
Application No. 10/978,110	:	PURSUANT TO
Filed: October 29, 2004	:	37 C.F.R. § 1.78(A)(3)
Attorney Docket No. 5220.230-US	:	
Title of Invention: PULMONARY	:	
INSULIN CRYSTALS	:	

This is a decision on the "PETITION FOR UNINTENTIONALLY DELAYED PRIORITY CLAIM UNDER 37 C.F.R. 1.78(A)(2)," filed on June 16, 2008, which is being treated as a petition pursuant to 37 C.F.R. § 1.78(a)(3), to accept an unintentionally delayed claim under 35 U.S.C. § 120 for the benefit of priority to the prior-filed non-provisional applications set forth in the amendment filed concurrently with this petition.

A petition for acceptance of a claim for late priority pursuant to 37 C.F.R. § 1.78(a)(3) is only applicable to those applications filed on or after November 29, 2000. Further, the petition is appropriate only after the expiration of the period specified in 37 C.F.R. § 1.78(a)(2)(ii). In addition, the petition pursuant to 37 C.F.R. § 1.78(a)(3) must be accompanied by:

(1) the reference required by 35 U.S.C. § 120 and 37 C.F.R. § 1.78(a)(2)(i) of the prior-filed application, unless previously submitted;
(2) the surcharge set forth in § 1.17(t); and
(3) a statement that the entire delay between the date the claim was due under 37 C.F.R. § 1.78(a)(2)(ii) and the date the claim was filed was unintentional. The Director may require additional information where there

is a question whether the delay was unintentional.

All of the above requirements having been satisfied, the late claim for priority pursuant to 35 U.S.C. § 120 is accepted as being unintentionally delayed.

The granting of this petition to accept the delayed benefit claim to the prior-filed applications pursuant to 37 C.F.R. § 1.78(a)(3) should not be construed as meaning that this application is entitled to the benefit of the prior-filed applications. In order for this application to be entitled to the benefit of the prior-filed applications, all other requirements under 35 U.S.C. § 120 and 37 C.F.R. §§ 1.78(a)(1) and (a)(2) must be met. Similarly, the fact that the corrected Filing Receipt accompanying this decision on petition includes the prior-filed applications should not be construed as meaning that Applicant is entitled to the claim for benefit of priority to the prior-filed applications noted thereon. Accordingly, the Examiner will, in due course, consider this benefit claim and determine whether the application is entitled to the benefit of the earlier filing date.

A corrected Filing Receipt, which includes the priority claim to the prior-filed nonprovisional applications, accompanies this decision on petition.

Any inquiries concerning this decision may be directed to Senior Attorney Paul Shanoski at (571) 272-3225. All other inquiries concerning either the examination procedures or status of the application should be directed to the Technology Center.

Technology Center Art Unit 1654 will be made aware of this decision, so that the Examiner may consider Applicant's entitlement to claim benefit of priority under 35 U.S.C. § 120 to the prior-filed nonprovisional applications.

Anthony Knight
Supervisor
Office of Petitions

ATTACHMENT: Corrected Filing Receipt

UNITED STATES PATENT AND TRADEMARK OFFICE

COMMISSIONER FOR PATENTS
UNITED STATES PATENT AND TRADEMARK OFFICE
P.O. BOX 1450
ALEXANDRIA, VA 22313-1450
www.uspto.gov

PHILIP S. JOHNSON
JOHNSON & JOHNSON
ONE JOHNSON & JOHNSON PLAZA
NEW BRUNSWICK NJ 08933-7003

COPY MAILED

JAN 2 5 2006

OFFICE OF PETITIONS

Applicant: Wong et al.
Appl. No.: 10/978,139
Filing Date: 1October 29, 2004
Title: COMPOSITIONS AND DOSAGE FORMS FOR ENHANCED ABSORPTION Attorney Docket No.: ALZ5067USANP6
Pub. No.: US 2005/0165102 A1
Pub. Date: July 28, 2005

This is a decision on the request for a corrected patent application publication under 37 CFR 1.221(b), filed on September 16, 2005, for the above-identified application.

The request is granted.

The corrected patent application publication will be published in due course, unless the patent issues before the application is republished.

The amendment received by the Office on January 24, 2005, with incorrect application numbers and which was improperly scanned into this application and published has been placed in the closed folder.

The request for corrected publication contained an incorrect application number. The request has been copied to the instant file and placed in the closed folder for application 10/978,193. Applicant is reminded to review the application number listed on papers submitted to the Office.

Inquiries relating to this matter may be directed to Mark O. Polutta at (571) 272-7709 (voice).

Mark O. Polutta
Office of Patent Legal Administration
Office of the Deputy Commissioner
for Patent Examination Policy

UNITED STATES PATENT AND TRADEMARK OFFICE

Commissioner for Patents
United States Patent and Trademark Office
P.O. Box 1450
Alexandria, VA 22313-1450
www.uspto.gov

MAILED

JUN 02 2010

OFFICE OF PETITIONS

BOND, SCHOENECK & KING, PLLC
ONE LINCOLN CENTER
SYRACUSE NY 13202-1355

In re Application of
Dan V. Goia et al
Application No. 10/978,153
Filed: October 29, 2004
Attorney Docket No. NDI 0003 PA

DECISION ON PETITION

This is a decision on the petition under the unintentional provisions of 37 CFR 1.137(b), filed March 29, 2010, to revive the above-identified application.

The petition is **GRANTED**.

The petition satisfies the conditions for revival pursuant to the provisions of 37 CFR 1.137(b) in that (1) the reply in the form of an amendment; (2) the petition fee; and (3) the required statement of unintentional delay have been received. Accordingly, the reply to the nonfinal rejection mailed January 7, 2008, is accepted as having been unintentionally delayed.

Telephone inquiries concerning this decision should be directed to the undersigned at (571) 272-3208.

This application is being referred to Technology Center AU 1793 for appropriate action by the Examiner in the normal course of business on the reply received March 29, 2010.

/KOC/
Karen Creasy
Petitions Examiner
Office of Petitions

UNITED STATES PATENT AND TRADEMARK OFFICE

Commissioner for Patents
United States Patent and Trademark Office
P.O. Box 1450
Alexandria, VA 22313-1450
www.uspto.gov

STANLEY E. LASS
P.O. BOX 308
OGDEN, IA 50212

COPY MAILED
JUN 0 6 2006
OFFICE OF PETITIONS

In re Application of	:	
Lass, Stanley E.	:	
Application No. 10/978,187	:	ON PETITION
Filed: October 29, 2004	:	
Title: ENGINE-FLYWHEEL HYBRID	:	

This is a decision on the petition under 37 CFR 1.102(c)(1), filed April 24, 2006, to make the above-identified application special based on applicant's age as set forth in M.P.E.P. § 708.02, Section IV.

The petition is **GRANTED**.

A grantable petition to make an application special under 37 CFR 1.102(c)(1) and MPEP § 708.02, Section IV: Applicant's Age must be accompanied by evidence showing that at least one of the applicants is 65 years of age, or more, such as a birth certificate or a statement by applicant. No fee is required.

The instant petition includes a copy of the applicant's birth certificate. Accordingly, the above-identified application has been accorded "special" status.

Telephone inquiries concerning this decision should be directed to the undersigned at 571-272-3206. All other inquiries concerning either the examination or status of the application should be directed to the Technology Center.

This matter is being referred to the Technology Center Art Unit 3682 for action on the merits commensurate with this decision.

Liana Chase
Petitions Examiner
Office of Petitions

UNITED STATES PATENT AND TRADEMARK OFFICE

Commissioner for Patents
United States Patent and Trademark Office
P.O. Box 1450
Alexandria, VA 22313-1450
www.uspto.gov

SERIAL NUMBER	FILING DATE	FIRST NAMED APPLICANT	ATTORNEY DOCKET NO.
10/978,196	10/29/2004	Kai Erik Thomenius	126956-2

EXAMINER
Ian J. Lobo
Art Unit 3662

DATE MAILED:

This is a communication from the examiner in charge of your application
COMMISSIONER OF PATENTS AND TRADEMARKS

The petition filed February 18, 2007 under 37 CFR §1.97(d)(2)(ii) for consideration of an information disclosure statement filed after allowance has been:

[X] GRANTED.

[ ] DENIED.

The petition lacks:

[ ] The required fee under 37 CFR §§1.97(d)(2)(iii) and 1.17(i)(1).

[ ] A proper certification as specified in 37 CFR §§1.97(d)(2)(i) and 1.97(e)

The information disclosure statement has been placed of record in the file but will not be considered by the examiner.

Note: a petition fee of $180 for the petition has been charged to Deposit Account 07-0806 as authorized in the IDS letter.

Thomas H. Tarcza
SPE Art Unit 3662
571-272-6979

UNITED STATES PATENT AND TRADEMARK OFFICE

Commissioner for Patents
United States Patent and Trademark Office
P.O. Box 1450
Alexandria, VA 22313-1450
www.uspto.gov

TELCORDIA TECHNOLOGIES, INC.
ONE TELCORDIA DRIVE 5G116
PISCATAWAY, NJ 08854-4157

COPY MAILED

SEP 2 5 2009

OFFICE OF PETITIONS

In re Application of	:	
Stanley PIETROWICZ	:	
Application No. 10/978,204	:	ON PETITION
Filed: October 29, 2004	:	
Attorney Docket No. APP 1575	:	

This is a decision on the petition under the unintentional provisions of 37 CFR 1.137(b), filed July 24, 2009, to revive the above-identified application.

The petition is **GRANTED**.

The application became abandoned for failure to timely file a reply within the meaning of 37 CFR 1.113 to the final Office action of October 29, 2008. The proposed reply required for consideration of a petition to revive must be a Notice of Appeal (and appeal fee required by 37 CFR 41.20(b)(2), an amendment that *prima facie* places the application in condition for allowance, a Request for Continued Examination and submission (37 CFR 1.114), or the filing of a continuing application under 37 CFR 1.53(b). See MPEP 711.03(c)(III)(A)(2). No extensions of time pursuant to the provisions of 37 CFR 1.136(a) were obtained. Accordingly, the date of abandonment of this application is January 30, 2009.

The petition satisfies the requirements of 37 CFR 1.137(b) in that petitioner has supplied (1) the reply in the form of a Request for Continued Examination (RCE) and fee of $810, and the submission required by 37 CFR 1.114; (2) the petition fee of $1620; and (3) the required statement of unintentional delay have been received.

It is not apparent whether the person signing the statement of unintentional delay was in a position to have firsthand or direct knowledge of the facts and circumstances of the delay at issue. Nevertheless, such statement is being treated as having been made as the result of a reasonable inquiry into the facts and circumstances of such delay. See 37 CFR 10.18(b) and Changes to Patent Practice and Procedure; Final Rule Notice, 62 Fed. Reg. 53131, 53178 (October 10, 1997), 1203 Off. Gaz. Pat. Office 63, 103 (October 21, 1997). In the event that such an inquiry has not been made, petitioner must make such an inquiry. If such inquiry results in the discovery that it is not correct that the entire delay in filing the required reply from the due date for the reply until the filing of a grantable petition pursuant to 37 CFR 1.137(b) was unintentional, petitioner must notify the Office.

There is no indication that the person signing the petition was ever given a power of attorney to prosecute the application. If the person signing the petition desires to receive future correspondence regarding this application, the appropriate power of attorney document must be submitted. While a courtesy copy of this decision is being mailed to the person signing the petition, all future correspondence will be directed to the address currently of record until appropriate instructions are received.

Telephone inquiries concerning this decision should be directed to Diane Goodwyn at (571) 272-6735.

This application is being referred to Technology Center AU 2193 for processing of the RCE and for appropriate action by the Examiner in the normal course of business on the amendment submitted in accordance with 37 CFR 1.114.

Thurman K. Page
Petitions Examiner
Office of Petitions

cc: THOMAS J. LOOS
300 S. WACKER DRIVE, SUITE 3200
CHICAGO, IL 60606

RAM Fee History Query

Revenue Accounting and Management

Name/Number: 10978204 Total Records Found: 7

Start Date: Any Date End Date: Any Date

Accounting Date	Sequence Num.	Fee Type	Fee Code	Fee Amount	Mailroom Date	Payment Method
07/27/2009	00001150	4	1202	$520.00	07/24/2009	DA 132490
07/27/2009	00001152	4	1801	$810.00	07/24/2009	DA 132490
07/27/2009	00001151	4	1453	$1,620.00	07/24/2009	DA 132490
07/28/2008	00000017	1	1253	$1,050.00	07/24/2008	DA 021822
06/10/2005	00000039		8021	$40.00	04/20/2005	DA 021822
11/03/2004	00000044	1	1202	$108.00	10/29/2004	DA 021822
11/03/2004	00000043	1	1001	$790.00	10/29/2004	DA 021822

Doc Code: PET.OP
Document Description: Petition for Review by the Office of Petitions

PTO/SB/64 (07-09)
Approved for use through 07/31/2012. OMB 0651-0031
U.S. Patent and Trademark Office; U.S. DEPARTMENT OF COMMERCE
Under the Paperwork Reduction Act of 1995, no persons are required to respond to a collection of information unless it displays a valid OMB control number.

PETITION FOR REVIVAL OF AN APPLICATION FOR PATENT ABANDONED UNINTENTIONALLY UNDER 37 CFR 1.137(b)

Docket Number (Optional) 09-456

First named inventor: Stanley Pietrowicz

Application No.: 10/978,204 Art Unit: 2193

Filed: October 29, 2004 Examiner: Chuong D. Ngo

Title: Method And System For Estimating And Applying A Step Size Value For LMS Echo Cancellers

Attention: Office of Petitions
Mail Stop Petition
Commissioner for Patents
P.O. Box 1450
Alexandria, VA 22313-1450
FAX (571) 273-8300

NOTE: If information or assistance is needed in completing this form, please contact Petitions Information at (571) 272-3282.

The above-identified application became abandoned for failure to file a timely and proper reply to a notice or action by the United States Patent and Trademark Office. The date of abandonment is the day after the expiration date of the period set for reply in the office notice or action plus any extensions of time actually obtained.

APPLICANT HEREBY PETITIONS FOR REVIVAL OF THIS APPLICATION

NOTE: A grantable petition requires the following items:
(1) Petition fee;
(2) Reply and/or issue fee;
(3) Terminal disclaimer with disclaimer fee - required for all utility and plant applications filed before June 8, 1995; and for all design applications; and
(4) Statement that the entire delay was unintentional

1. Petition Fee

☐ Small entity-fee $ _____ (37 CFR 1.17(m)). Application claims small entity status. See 37 CFR 1.27.

☑ Other than small entity-fee $ 1620 (37 CFR 1.17(m))

2. Reply and/or fee

A. The reply and/or fee to the above-noted Office action in the form of Response After Final (identify type of reply):

☐ has been filed previously on _____.

☑ is enclosed herewith.

B. The issue fee and publication fee (if applicable) of $ _____.

☐ has been paid previously on _____.

☐ is enclosed herewith.

This collection of information is required by 37 CFR 1.137(b). The information is required to obtain or retain a benefit by the public which is to file (and by the USPTO to process) an application. Confidentiality is governed by 35 U.S.C. 122 and 37 CFR 1.11 and 1.14. This collection is estimated to take 1.0 hour to complete, including gathering, preparing, and submitting the completed application form to the USPTO. Time will vary depending upon the individual case. Any comments on the amount of time you require to complete this form and/or suggestions for reducing this burden, should be sent to the Chief Information Officer, U.S. Patent and Trademark Office, U.S. Department of Commerce, P.O. Box 1450, Alexandria, VA 22313-1450. DO NOT SEND FEES OR COMPLETED FORMS TO THIS ADDRESS. **SEND TO: Mail Stop Petition, Commissioner for Patents, P.O. Box 1450, Alexandria, VA 22313-1450.**

If you need assistance in completing the form, call 1-800-PTO-9199 and select option 2.

Under the Paperwork Reduction Act of 1995, no persons are required to respond to a collection of information unless it displays a valid OMB control number

3. Terminal disclaimer with disclaimer fee

☑ Since this utility/plant application was filed on or after June 8, 1995, no terminal disclaimer is required.

☐ A terminal disclaimer (and disclaimer fee (37 CFR 1.20(d)) of $_____ for a small entity or $_____ for other than a small entity) disclaiming the required period of time is enclosed herewith (see PTO/SB/63).

4. STATEMENT: The entire delay in filing the required reply from the due date for the required reply until the filing of a grantable petition under 37 CFR 1.137(b) was unintentional. [NOTE: The United States Patent and Trademark Office may require additional information if there is a question as to whether either the abandonment or the delay in filing a petition under 37 CFR 1.137(b) was unintentional (MPEP 711.03(c), subsections (III)(C) and (D)).]

WARNING:

Petitioner/applicant is cautioned to avoid submitting personal information in documents filed in a patent application that may contribute to identity theft. Personal information such as social security numbers, bank account numbers, or credit card numbers (other than a check or credit card authorization form PTO-2038 submitted for payment purposes) is never required by the USPTO to support a petition or an application. If this type of personal information is included in documents submitted to the USPTO, petitioners/applicants should consider redacting such personal information from the documents before submitting them to the USPTO. Petitioner/applicant is advised that the record of a patent application is available to the public after publication of the application (unless a non-publication request in compliance with 37 CFR 1.213(a) is made in the application) or issuance of a patent. Furthermore, the record from an abandoned application may also be available to the public if the application is referenced in a published application or an issued patent (see 37 CFR 1.14). Checks and credit card authorization forms PTO-2038 submitted for payment purposes are not retained in the application file and therefore are not publicly available.

/Thomas J. Loos/	July 24, 2009
Signature	Date
Thomas J. Loos	60,161
Type or Printed name	Registration Number, If applicable
300 S. Wacker Drive, Suite 3200	(312) 913-3338
Address	Telephone Number
Chicago, IL 60606	
Address	

Enclosures:

☐ Fee Payment

☑ Reply

☐ Terminal Disclaimer Form

☐ Additional sheets containing statements establishing unintentional delay

☑ Other: Request for Continued Application (RCE) and 6 Replacement Sheets

CERTIFICATE OF MAILING OR TRANSMISSION [37 CFR 1.8(a)]

I hereby certify that this correspondence is being:

☐ Deposited with the United States Postal Service on the date shown below with sufficient postage as first class mail in an envelope addressed to: Mail Stop Petition, Commissioner for Patents, P. O. Box 1450, Alexandria, VA 22313-1450.

☐ Transmitted by facsimile on the date shown below to the United States Patent and Trademark Office at (571) 273-8300.

Date _____ Signature _____

Typed or printed name of person signing certificate _____

UNITED STATES PATENT AND TRADEMARK OFFICE

Commissioner for Patents
United States Patent and Trademark Office
P.O. Box 1450
Alexandria, VA 22313-1450
www.uspto.gov

AT & T Legal Department - BHGL
Attn: Patent Docketing Room 2A-207
One AT&T Way
Bedminster NJ 07921

COPY MAILED

DEC 1 4 2009

OFFICE OF PETITIONS

In re Application of	:	
James Thomas Maciejewski et al.	:	
Application No. 10/978,207	:	DECISION ON PETITION
Filed: October 29, 2004	:	TO WITHDRAW
Attorney Docket No. **8285/712**	:	FROM RECORD
	:	

This is a decision on the Request to Withdraw as attorney or agent of record under 37 CFR § 1.36(b), filed October 22, 2009.

The request is **NOT APPROVED**.

The request cannot be approved because the attorney cannot withdraw attorneys' by Customer Number when the power of attorney was not originally granted by Customer Number in the Patent Application Declaration Combined with Power of Attorney filed February 14, 2005. Also it is noted that the change in correspondence address is improper.

The Office will only accept correspondence address changes to the most current address information provided for the assignee of the entire interest *who properly became of record under 37 CFR 3.71,* or, if no assignee of the entire interest has properly been made of record, the most current address information provided for the first named inventor. 37 CFR 3.71(c) states:

> *An assignee becomes of record either in a national patent application or a reexamination proceeding by filing a statement in compliance with § 3.73(b) that is signed by a party who is authorized to act on behalf of the assignee.*

The assignee must establish its ownership of the patent to the satisfaction of the Director. In this regard, the statement under 37 CFR 3.73(b) must have either: (i) documentary evidence of a chain of title from the original owner to the assignee (*e.g.*, copy of an executed assignment), and a statement affirming that the documentary

evidence of the chain of title from the original owner to the assignee was or concurrently is being submitted for recordation pursuant to § 3.11; or (ii) a statement specifying where documentary evidence of a chain of title from the original owner to the assignee is recorded in the assignment records of the Office (*e.g.*, reel and frame number).

Therefore, as there is currently no Statement under 37 CFR 3.73(b) of record in the instant application, the Office cannot change the correspondence address to the address on the Request to Withdraw at this present time.

All future communications from the Office will continue to be directed to the above-listed address until otherwise notified by applicant.

Telephone inquires concerning this decision should be directed to the undersigned at 571-272-4584.

JoAnne Burke
Petitions Examiner
Office of Petitions

cc: Brinks Hofer Gilson & Lione
P.O. Box 10395
Chicago, IL 60610

UNITED STATES PATENT AND TRADEMARK OFFICE

UNITED STATES DEPARTMENT OF COMMERCE
United States Patent and Trademark Office
Address: COMMISSIONER FOR PATENTS
P.O. Box 1450
Alexandria, Virginia 22313-1450
www.uspto.gov

Elaine Venturelli
IBM Intellectual Property Law Department
8051 Congress Avenue
Internal Address 1087
Boca Raton, FL 33487

Mail Date: 04/21/2010

Applicant	: Bernard Paul Palmer JR.	: DECISION ON REQUEST FOR
Patent Number	: 7657938	: RECALCULATION of PATENT
Issue Date	: 02/02/2010	: TERM ADJUSTMENT IN VIEW
Appliction No	: 10/978,208	: OF WYETH AND NOTICE OF INTENT TO
Filed	: 10/28/2004	: ISSUE CERTIFICATE OF CORRECTION
		:

The Request for Recalculation is **GRANTED** to the extent indicated.

The patent term adjustment has been determined to be **1497** days. The USPTO will *sua sponte* issue a certificate of correction reflecting the amount of PTA days determined by the recalculation.

Prior to the issuance of the certificate of correction, the USPTO will afford patentee an opportunity to be heard and request reconsideration. Accordingly, patentee has **one month or thirty (30) days**, whichever is longer, to file a request for reconsideration of this patent term adjustment calculation. See 35 U.S.C. 154(b)(3)(B)(ii) and 37 CFR 1.322(a)(4). No extensions of time will be granted under 37 CFR 1.136.

Patentee should use document code PET.OP if electronically filing a request for reconsideration of this patent term adjustment calculation. The patentee must also include the information required by 37 CFR 1.705(b)(2) and the fee required by 37 CFR 1.18(e). If patentee does not file a timely request for reconsideration of this patent term adjustment calculation including the information required by 37 CFR 1.705(b)(2) and the fee required by 37 CFR 1.18(e), the USPTO will issue a certificate of correction reflecting the PTA determination noted above.

Patentee should be aware that in order to preserve the right to review in the United States District Court for the District of Columbia of the USPTO patent term adjustment determination, patentee must ensure that he or she also take the steps required under 35 U.S.C. 154(b)(4)(A) in a timely manner. Nothing in the request for recalculation should be construed as providing an alternative time frame for commencing a civil action under 35 U.S.C. 154(b)(4)(A).

Any questions concerning this decision should be directed to the Office of Patent Legal Administration at 571-272-7702.

UNITED STATES PATENT AND TRADEMARK OFFICE

Commissioner for Patents
United States Patent and Trademark Office
P.O. Box 1450
Alexandria, VA 22313-1450
www.uspto.gov

ROBERT S. LIPTON, ESQUIRE
201 NORTH JACKSON STREET
P. O. BOX 934
MEDIA, PA 19063-0934

COPY MAILED

AUG 0 8 2007

OFFICE OF PETITIONS

In re Application of :
Daniel A. Hughes :
Application No. 10/978,229 :
Filed: October 29, 2004 :
Attorney Docket No. 5527-8 :

ON PETITION

This is a decision on the petition, filed March 2, 2007, to revive the above-identified application under the provisions of 37 CFR 1.137(b).

The petition is **GRANTED**.

The application became abandoned for failure to timely file a reply within the meaning of 37 CFR 1.113 to the final Office action of August 23, 2006. On March 2, 2007, the present petition was filed. A Notice of Abandonment was subsequently mailed on March 5, 2007.

The petition satisfies the requirements of 37 CFR 1.137(b) in that petitioner has supplied (1) the reply in the form of a continuing application under 37 CFR 1.53(b); (2) the petition fee of $750; and (3) an adequate statement of unintentional delay.

This application is being revived solely for purposes of continuity. As continuity has been established by this decision, the application is again abandoned in favor of continuing application No. 11/710,274 filed February 23, 2007.

Telephone inquiries concerning this decision should be directed to the undersigned at (571) 272-3204.

Sherry D. Brinkley
Petitions Examiner
Office of Petitions

UNITED STATES PATENT AND TRADEMARK OFFICE

Commissioner for Patents
United States Patent and Trademark Office
P.O. Box 1450
Alexandria, VA 22313-1450
www.uspto.gov

MICROSOFT CORPORATION
ONE MICROSOFT WAY
REDMOND WA 98052-6399

MAILED

JUL 12 2010

OFFICE OF PETITIONS

In re Application of	:	
Zeng et al.	:	
Application No. 10/978,232	:	DECISION ON PETITION
Filed: October 29, 2004	:	
Attorney Docket No. 310761.01	:	

This is a decision on the petition under the unintentional provisions of 37 CFR 1.137(b), filed June 16, 2010, to revive the above-identified application.

The petition is **GRANTED**.

This application became abandoned for failure to timely pay the issue and publication fees on or before June 10, 2010, as required by the Notice of Allowance and Fee(s) Due mailed March 10, 2010. Accordingly, the date of abandonment of this application is June 11, 2010. A Notice of Abandonment was mailed June 23, 2010.

The petition satisfies the requirements of 37 CFR 1.137(b) in that petitioner has supplied (1) the reply in the form of payment of the issue fee of $1,510.00 and publication fee of $300.00; (2) the petition fee of $1,620.00; and (3) a proper statement of unintentional delay.

Telephone inquiries concerning this decision should be directed to the undersigned at (571) 272-7751.

This application is being referred to the Office of Data Management for processing into a patent.

Joan Olszewski
Petitions Examiner
Office of Petitions

UNITED STATES PATENT AND TRADEMARK OFFICE

Commissioner for Patents
United States Patent and Trademark Office
P.O. Box 1450
Alexandria, VA 22313-1450
www.uspto.gov

WILLIAMS, MORGAN & AMERSON/LUCENT
10333 RICHMOND, SUITE 1100
HOUSTON TX 77042

COPY MAILED

JAN 2 5 2005

OFFICE OF PETITIONS

In re Application of	:	
Cheng et al.	:	
Application No. 10/978,234	:	DECISION GRANTING PETITION
Filed: October 29, 2004	:	
Attorney Docket No. 2100.014000	:	

This is a decision on the petition under 37 CFR 1.53, filed December 28, 2004, requesting that the above-identified application be accorded a filing date of October 29, 2004, with 4 sheets of drawings as part of its original disclosure.

On October 29, 2004, applicants deposited the above-identified application. On December 10, 2004, the Office mailed a Notice of Incomplete Nonprovisional Application, stating, *inter alia*, that the application was deposited without drawings and that the filing date would be the date of receipt of the drawings.

In response, on December 28, 2004, applicants filed, *inter alia*, the present petition and a copy of applicants' postcard receipt acknowledging receipt of 4 sheets of drawings on October 29, 2004. Additionally, applicants submitted 4 sheets of drawings with the present petition.

Upon review of the record, the 4 sheets of drawings, deposited on October 29, 2004, have not been located among the application papers. However, the evidence is convincing that the application papers deposited on October 29, 2004, included 4 sheets of drawings, which were subsequently misplaced in the United States Patent and Trademark Office. Therefore, the application, including the 4 sheets of drawings, was complete on filing and will be granted a filing date of October 29, 2004.

Accordingly, the petition is granted.

The requirement for drawings set forth in the Notice of Incomplete Nonprovisional Application was sent in error and is hereby vacated. Accordingly, no petition fee is necessary.

The Office of Initial Patent Examination is directed **to accord the above-identified application a filing date of October 29, 2004**, using the 4 sheets of drawings submitted on December 28, 2004, as part of the original disclosure, and to mail a corrected filing receipt.

Any inquiries related to this decision should be directed to the undersigned at (571) 272-3211.

Christina Tartera Donnell

Christina Tartera Donnell
Senior Petitions Attorney
Office of Petitions

PRINTER RUSH

(PTO ASSISTANCE)

Application:	10978234	**Examiner:**	Zewari	**GAU:**	2617
From:	Daxa Patel	**Location:**	IDC	**Date:**	01/07/2010

Tracking #: Week Date: 12/14/2009

DOC CODE	DOC DATE	MISCELLANEOUS
[ ] 1449		[ ] Continuing Data
[ ] IDS		[ ] Foreign Priority
[X] CLM	10/15/2009	[ ] Document Legibility
[ ] IIFW/FWCLM		[ ] Fees
[ ] SRFW		[ ] Other
[ ] DRW		
[ ] OATH		Attn:
[ ] 312		
[ ] SPEC		

[RUSH] Message:

Claim 12 depends on ~~higher~~ non-existing claim 21, please resolve.

Thank you
DP

[XRUSH] Response:

Please treat claim 12 as depending from claim 1.

Please see the additional correction on top of page 4

Initials: STZ

Examiner: PUBS contacts - for DESIGNS: Don Fairchild, 703-756-1566; for ALL OTHER files: Bernadette Queen, 703-756-1565.
NOTE: This form will be included as part of the official USPTO record with the response document coded as XRUSH.

REV: May 09

AMENDMENTS TO THE CLAIMS

Formatted: Indent: Left: 0 pt, First line: 0 pt, Tabs: -9 pt, List tab + Not at 54 pt

1. (Original) A method for controlling a handover in a communications system that provides a plurality of channels comprising at least one high-speed data channel that supports real-time, high-speed data communications, the method comprising:

communicating data to a first base station that is configured to transmit the data to a mobile unit over said at least one high-speed data channel during real-time, high speed communication;

receiving feedback of channel conditions from the first base station and at least one second base station, wherein the feedback indicates channel conditions determined using measurements of at least one of the plurality of channels other than said at least one high-speed data channel; and

initiating a soft handover such that the mobile unit is in concurrent communication with the first and second base stations using channels other than said at least one high-speed data channel

Formatted: Justified

~~communicating from a mobile device data to a first base station;~~

~~determining that the mobile device is to be handed over from the first base station to a second base station;~~

selecting, subsequent to initiating the soft handover and at a radio network controller that is communicatively coupled to the first and second base stations, a switchover time for a hard handover of said at least one high speed data channel, the switchover time indicating a time at which the first base station stops transmitting data to the mobile unit over said at least one high-speed data channel and the second base station starts transmitting data to the mobile unit over said at least one high-speed data channel, and wherein said

please insert the word (switchover time) here

switchover time is selected to reduce service interruption during real-time, high speed communication by selecting the based on channel conditions associated with the communications to the first and second base stations;

transmitting a first message from the radio network controller to the first and second base stations, the first message indicating the switchover time;

stopping communication between the mobile device and the first base station at the switchover time; and

starting communication between the mobile device and the second base station at the switchover time.

2. (Original) A method, as set forth in claim 1, wherein selecting the switchover time for beginning communications with the second base station further comprises selecting the switchover time for beginning communications with the second base station wherein said switchover time is based on SIR associated with the communications to the first and second base stations.

3. (Original) A method, as set forth in claim 2, wherein selecting the switchover time for beginning communications with the second base station wherein said switchover time is based on SIR associated with the communications to the first and second base stations further comprises selecting the switchover time for beginning communications with the second base station at a time when SIR associated with the communications to the first base station falls below a preselected threshold.

4. (Original) A method, as set forth in claim 2, wherein selecting the switchover time for beginning communications with the second base station wherein said switchover time is based on SIR associated with the communications to the first and second base stations further comprises selecting the switchover time for beginning communications with the second base station at a time when SIR associated with the communications to the second base station rises above a preselected threshold.

5. (Original) A method, as set forth in claim 2, wherein selecting the switchover time for beginning communications with the second base station wherein said switchover time is based on SIR associated with the communications to the first and second base stations further comprises selecting the switchover time for beginning communications with the second base station at a time when SIR associated with the communications to the first base station falls below a preselected threshold and SIR associated with the communications to the second base station rises above a preselected threshold.

6. (Original) A method, as set forth in claim 1, further comprising sending a reconfiguration message to the first and second base stations to allow communications to begin with the second base station.

7. (Original) A method, as set forth in claim 6, wherein sending the reconfiguration message to the first and second base stations to allow communications to begin with the second base station further comprises sending the reconfiguration message to the first and second base stations at about the same time to allow communications to begin with the second base station.

8. (Original) A method, as set forth in claim 6, wherein sending the reconfiguration message to the first and second base stations to allow communications to begin with the second base station further comprises sending the reconfiguration message to the first and second base stations during overlapping time intervals to allow communications to begin with the second base station.

9. (Original) A method, as set forth in claim 6, wherein sending the reconfiguration message to the first and second base stations to allow communications to begin with the second base station further comprises allowing communications with the first base station to cease.

10. (Original) A method, as set forth in claim 1, wherein communicating data to the first base station further comprises, communicating data to the first base station over a high speed data channel.

11. (Original) A method, as set forth in claim 1, further comprising communicating data to both the first and second base stations during a first period of time after the switchover time is selected and before an actual switchover occurs.

12. (Original) A method, as set forth in claim ~~21~~ 1, further comprising storing the communicated data in a buffer in the second base station during the first period of time.

13. (Original) A method, as set forth in claim 12, further comprising estimating at the second base station the data provided to the first base station during the first period of time.

14. (Original) A method, as set forth in claim 13, further comprising clearing data from the second buffer that has been estimated as being provided to the first base station during the first period of time.

15-24. (Canceled)

UNITED STATES PATENT AND TRADEMARK OFFICE

Commissioner for Patents
United States Patent and Trademark Office
P.O. Box 1450
Alexandria, VA 22313-1450
www.uspto.gov

DARBY & DARBY P.C.
P. O. BOX 5257
NEW YORK NY 10150-5257

COPY MAILED

MAR 1 4 2005

OFFICE OF PETITIONS

In re Application of
Langenberg et al.
Application No. 10/978,242
Filed: October 29, 2004
Attorney Docket No. 20195/0201917-US0
Title: Integrated Circuit Having A Mixer Circuit

DECISION REFUSING STATUS
UNDER 37 CFR 1.47(a)

This is in response to the petition filed February 7, 2005, under 37 CFR. §1.47(a).

The petition under 37 CFR. §1.47(a) is **DISMISSED**.

Rule 47 applicant is given TWO MONTHS from the mailing date of this decision to reply, correcting the below-noted deficiencies. Any reply should be entitled "Request for Reconsideration of Petition Under 37 CFR. §1.47(a)," and should only address the deficiencies noted below, except that the reply may include an oath or declaration executed by the non-signing inventor. **Failure to respond will result in abandonment of the application**. Any extensions of time will be governed by 37 CFR. §1.136(a).

The above-identified application was filed on October 29, 2004, without an executed oath or declaration. Accordingly, on December 10, 2004, applicant was mailed a "Notice to File Missing Parts of Nonprovisional Application - Filing Date Granted," requiring for the purposes of this decision an executed oath or declaration in compliance with §1.63, and a surcharge for its late filing. This Notice set an extendable two-month period for reply of February 10, 2005.

In reply, applicant filed a petition, the surcharge for late filing of the declaration, and a partially executed declaration. A $130.00 petition fee was submitted with the petition, however, the current petition fee is $200.00. Accordingly, deposit account 04-0100 will be charged the $70.00 difference.

A grantable petition under 37 CFR. §1.47(a) requires: (1) proof that the non-signing inventor cannot be reached or refuses to sign the oath or declaration after having been presented with the application papers (specification, claims and drawings); (2) an acceptable oath or declaration in compliance with 35 U.S.C. §§115 and 116; (3) the petition fee; and (4) a statement of the last known address of the non-signing inventor. The instant petition does not satisfy requirements (1).

As to item (1), where an inventor cannot be located/reached as in the case of inventor Langenberg rule 47 applicant must demonstrate diligent effort was made to find or reach the non-signing inventors. See MPEP 409.03(d). The statements made in the petition do not illustrate "diligent effort" was made to locate the non-signing inventor. Although rule 47 applicant indicates a mailing was made to non-signing inventor's last known address and the assignee was contacted to ascertain the address of inventor Langenberg, these actions are not sufficient to establish diligent effort was made to locate inventor Langenberg. Rule 47 applicant may wish to conduct an electronic search, inquire the joint inventors whether they are aware of a forwarding address for non-signing inventor. Copies of documentary evidence such as internet searches, certified mail return receipts, cover letters of instructions, telegrams, that support a finding that the nonsigning inventor could not be found or reached should be made part of the statement. The steps taken to locate the whereabouts of the nonsigning inventor should be included in a statement of facts. It is important that the statement contain facts as opposed to conclusions. If inventor Langenberg is located, a copy of the application papers (specification, including claims, drawings, and oath or declaration) should be mailed to the inventor's mailing address.

Further, if the inventor is located and he refuses to execute the application papers, rule 47 applicant will need to provide the mailing address in a newly executed declaration or in an application data sheet pursuant to 37 CFR 1.76.

Further correspondence with respect to this matter should be addressed as follows:

By mail:	Mail Stop Petition Commissioner for Patents P.O. Box 1450 Alexandria, VA 22313-1450
By facsimile:	(703) 872-9306
By delivery service: (FedEx, UPS, DHL, etc.)	U.S. Patent and Trademark Office Customer Service Window, Randolph Building 401 Dulany Street Alexandria, VA 22314

Telephone inquiries related to this decision may be directed to the undersigned at (571) 272-3215.

Charlema R. Grant

Charlema R. Grant
Petitions Attorney
Office of Petitions

UNITED STATES PATENT AND TRADEMARK OFFICE

Commissioner for Patents
United States Patent and Trademark Office
P.O. Box 1450
Alexandria, VA 22313-1450
www.uspto.gov

COPY MAILED

AUG 1 6 2005

OFFICE OF PETITIONS

DARBY & DARBY P.C.
P. O. BOX 5257
NEW YORK NY 10150-5257

In re Application of

Jorg Langenberg, Thomas Liebermann, Werner Simburger, Marc Tiebout and Hans Dieter Wohlmuth

Application No. 10/978,242

Filed: October 29, 2004

Attorney Docket Number: 20195/0201917-US0

Title of Invention: Integrated Circuit Having A Mixer Circuit

: DECISION GRANTING STATUS
: UNDER 37 CFR 1.47(a)

This is in response to the renewed petition under 37 CFR 1.47(a), filed July 7, 2005.

The petition is GRANTED.

Petitioner has shown that the non-signing inventor Langenberg can not be reached or located and diligent effort has been used to locate the inventor. The efforts outlined by petitioner demonstrate diligent effort was used to attempt to locate non-signing inventor.

The above-identified application and papers have been reviewed and found in compliance with 37 CFR 1.47(a). This application is hereby accorded Rule 1.47(a) status.

As provided in Rule 1.47(c), this Office will forward notice of this application's filing to the non-signing inventor at the address given in the petition. Notice of the filing of this application will also be published in the Official Gazette.

To make the renewed petition timely, a two month extension of time fee in the amount of $450.00 is required. Pursuant to petitioner's request Deposit account 04-0100 will be charged.

This application is being forwarded to the Office of Initial Patent Examination for further processing.

Telephone inquiries related to this decision may be directed to the undersigned at (571) 272-3215.

Charlema R. Grant

Charlema R. Grant
Petitions Attorney
Office of Petitions

UNITED STATES PATENT AND TRADEMARK OFFICE

Commissioner for Patents
United States Patent and Trademark Office
P.O. Box 1450
Alexandria, VA 22313-1450
www.uspto.gov

Jorg Langenberg
AM Standbad 10
46284 Dorsten
Germany

In re Application of
Jorg Langenberg, Thomas Liebermann,
Werner Simburger, Marc Tiebout and Hans
Dieter Wohlmuth
Application No. 10/978,242
Filed: October 29, 2004
Attorney Docket Number: 20195/0201917-US0

Title of Invention: Integrated Circuit Having A
Mixer Circuit

LETTER

COPY MAILED

AUG 1 6 2005

OFFICE OF PETITIONS

Dear Mr. Langenberg:

You are named as a joint inventor in the above-identified United States patent application filed under the provisions of 35 U.S.C. 116 (United States Code) and 37 C.F.R. § 1.47(a), Rules of Practice in Patent Cases. Should a patent be granted on the application you will be designated therein as a joint inventor.

As a named inventor you are entitled to inspect any paper in the file wrapper of the application, order copies of all or any part thereof (at a prepaid cost as per 37 C.F.R. § 1.19) or make your position of record in the application. Alternatively, you may arrange to do any of the preceding through a registered patent attorney or agent presenting written authorization from you. If you care to join the application, applicant (see below) would presumably assist you. Joining in the application would entail the filing of an appropriate oath or declaration by you pursuant to 37 C.F.R. § 1.63.

Telephone inquiries regarding this communication should be directed to Petitions Attorney Charlema R. Grant at (571) 272-3215. Requests for information regarding your application should be directed to the File Information Unit at (703) 308-2733. Information regarding how to pay for and order a copy of the application, or a specific paper in the application, should be directed to Certification Division at (703) 308-9726 or 1-800-972-6382 (outside the Washington D.C. area).

Charlema R. Grant

Charlema R. Grant
Petitions Attorney
Office of Petitions

DARBY & DARBY P.C.
P. O. BOX 5257
NEW YORK NY 10150-5257
LAURA BRUTMAN

UNITED STATES PATENT AND TRADEMARK OFFICE

Commissioner for Patents
United States Patent and Trademark Office
P.O. Box 1450
Alexandria, VA 22313-1450
www.uspto.gov

MHKKG/SUN
P.O. BOX 398
AUSTIN, TX 78767

COPY MAILED

NOV 19 2007

OFFICE OF PETITIONS

In re Application of
Noel Kivlin et al
Application No. 10/978,249
Filed: October 29, 2004
Attorney Docket No. 5981-91600

ON PETITION

This is a decision on the petition, filed August 13, 2007, which is being treated as a petition under 37 CFR 1.137(b) to revive the instant nonprovisional application for failure to timely notify the U.S. Patent and Trademark (USPTO) of the filing of an application in a foreign country, or under a multinational treaty that requires publication of applications eighteen months after filing. *See* 37 CFR 1.137(f).

The petition is **DISMISSED**.

Any request for reconsideration of this decision must be submitted within TWO (2) MONTHS from the mail date of this decision. Extensions of time under 37 CFR 1.136(a) are permitted. The reconsideration request should include a cover letter entitled "Renewed Petition under 37 CFR 1.137(b)." This is **not** a final agency action within the meaning of 5 U.S.C. § 704. No additional petition fee is required.

A review of the file record shows that a Request to Rescind was filed on August 13, 2007. However, petitioner has not provided the exact filing date of the foreign application. Before a proper determination on the merits of the petition can be decided, petitioner must supply the filing date of the foreign application in a renewed petition under 37 CFR 1.137(b). A courtesy copy of a Petition for Revival of an Application for Patent Abandoned for Failure to Notify the Office of a Foreign or International Filing (37 CFR 1.137(f)) is enclosed.

Further correspondence with respect to this matter should be addressed as follows:

By mail: Mail Stop PETITION
Commissioner for Patents
Post Office Box 1450
Alexandria, VA 22313-1450

By hand: Customer Service Window
Mail Stop Petitions
Randolph Building
401 Dulany Street
Alexandria, VA 22314

By Fax: (571) 273-8300
ATTN: Office of Petitions

Telephone inquiries concerning this decision should be directed to Irvin Dingle at (571) 272-3210.

Irvin Dingle
Petition Examiner
Office of Petitions

Attachment: blank copy of a Petition for Revival of an Application for Patent Abandoned for Failure to Notify the Office of a Foreign or International Filing (37 CFR 1.137(f)) form

PTO/SB/64a (11-07)
Approved for use through 11/30/2007. OMB 0651-0031
U.S. Patent and Trademark Office; U.S. DEPARTMENT OF COMMERCE
Under the Paperwork Reduction Act of 1995, no persons are required to respond to a collection of information unless it displays a valid OMB control number.

PETITION FOR REVIVAL OF AN APPLICATION FOR PATENT ABANDONED FOR FAILURE TO NOTIFY THE OFFICE OFA FOREIGN OR INTERNATIONAL FILING (37 CFR 1.137(f))	Docket Number (Optional)

First named inventor:

Application No.: Art Unit:

Filed: Examiner:

Title:

Attention: Office of Petitions
Mail Stop Petition
Commissioner for Patents
P.O. Box 1450
Alexandria, VA 22313-1450
FAX (571) 273-8300

NOTE: If information or assistance is needed in completing this form, please contact Petitions Information at (571) 272-3282.

The above-identified application became abandoned pursuant to 35 U.S.C. 122(b)(2)(B)(iii) for failure to timely notify the Office of the filing of an application in a foreign country or under a multinational international treaty that requires publication of applications eighteen months after filing. The date of abandonment is the day after the expiration date of the forty-five (45) day period set in 35 U.S.C. 122(b)(2)(B)(iii).

PURSUANT TO 37 CFR 1.137(f), APPLICANT HEREBY PETITIONS FOR REVIVAL OF THIS APPLICATION UNDER 37 CFR 1.137(b)

1.Petition fee

☐ Small entity-fee $ _____ (37 CFR 1.17(m)). Applicant claims small entity status. See 37 CFR 1.27.

☐ Other than small entity – fee $ _____ (37 CFR 1.17(m))

2. Notice of Foreign or International Filing (35 U.S.C. 122(b)(2)(B)(iii) and 37 CFR 1.213(c))

Subsequent to the filing of the above-identified application, an application was filed in another country, or under a multinational international treaty (e.g., filed under the Patent Cooperation Treaty), that requires publication of applications eighteen months after the filing. The filing date of the subsequently filed foreign or international application is _____.

This collection of information is required by 37 CFR 1.137. The information is required to obtain or retain a benefit by the public which is to file (and by the USPTO to process) an application. Confidentiality is governed by 35 U.S.C. 122 and 37 CFR 1.11 and 1.14. This collection is estimated to take 1.0 hour to complete, including gathering, preparing, and submitting the completed application form to the USPTO. Time will vary depending upon the individual case. Any comments on the amount of time you require to complete this form and/or suggestions for reducing this burden, should be sent to the Chief Information Officer, U.S. Patent and Trademark Office, U.S. Department of Commerce, P.O. Box 1450, Alexandria, VA 22313-1450. DO NOT SEND FEES OR COMPLETED FORMS TO THIS ADDRESS. **SEND TO: Mail Stop Petition, Commissioner for Patents, P.O. Box 1450, Alexandria, VA 22313-1450.**

If you need assistance in completing the form, call 1-800-PTO-9199 and select option 2.

Under the Paperwork Reduction Act of 1995, no persons are required to respond to a collection of information unless it displays a valid OMB control number.

STATEMENT: The entire delay in filing the required notice of a foreign or international filing from the due date for the required notice until the filing of a grantable petition under 37 CFR 1.137(b) was unintentional. [NOTE: The United States Patent and Trademark Office may require additional information if there is a question as to whether either the abandonment or the delay in filing a petition under 37 CFR 1.137(b) was unintentional (MPEP 711.03(c), subsections (III)(C) and (D)).]

WARNING:

Petitioner/applicant is cautioned to avoid submitting personal information in documents filed in a patent application that may contribute to identity theft. Personal information such as social security numbers, bank account numbers, or credit card numbers (other than a check or credit card authorization form PTO-2038 submitted for payment purposes) is never required by the USPTO to support a petition or an application. If this type of personal information is included in documents submitted to the USPTO, petitioners/applicants should consider redacting such personal information from the documents before submitting them to the USPTO. Petitioner/applicant is advised that the record of a patent application is available to the public after publication of the application (unless a non-publication request in compliance with 37 CFR 1.213(a) is made in the application) or issuance of a patent. Furthermore, the record from an abandoned application may also be available to the public if the application is referenced in a published application or an issued patent (see 37 CFR 1.14). Checks and credit card authorization forms PTO-2038 submitted for payment purposes are not retained in the application file and therefore are not publicly available.

Signature	Date
Typed or printed name	Registration Number, if applicable
Address	Telephone Number
Address	

Enclosures: ☐ Fee Payment

☐ Additional sheets containing statements establishing unintentional delay

☐ Other:_____

CERTIFICATE OF MAILING OR TRANSMISSION [37 CFR 1.8(a)]

I hereby certify that this correspondence is being:

☐ Deposited with the United States Postal Service on the date shown below with sufficient postage as first class mail in an envelope addressed to: Mail Stop Petition, Commissioner for Patents, P. O. Box 1450, Alexandria, VA 22313-1450.

☐ Transmitted by facsimile on the date shown below to the United States Patent and Trademark Office at (571) 273-8300.

Date	Signature
	Typed or printed name of person signing certificate

Privacy Act Statement

The **Privacy Act of 1974 (P.L. 93-579)** requires that you be given certain information in connection with your submission of the attached form related to a patent application or patent. Accordingly, pursuant to the requirements of the Act, please be advised that: (1) the general authority for the collection of this information is 35 U.S.C. 2(b)(2); (2) furnishing of the information solicited is voluntary; and (3) the principal purpose for which the information is used by the U.S. Patent and Trademark Office is to process and/or examine your submission related to a patent application or patent. If you do not furnish the requested information, the U.S. Patent and Trademark Office may not be able to process and/or examine your submission, which may result in termination of proceedings or abandonment of the application or expiration of the patent.

The information provided by you in this form will be subject to the following routine uses:

1. The information on this form will be treated confidentially to the extent allowed under the Freedom of Information Act (5 U.S.C. 552) and the Privacy Act (5 U.S.C 552a). Records from this system of records may be disclosed to the Department of Justice to determine whether disclosure of these records is required by the Freedom of Information Act.
2. A record from this system of records may be disclosed, as a routine use, in the course of presenting evidence to a court, magistrate, or administrative tribunal, including disclosures to opposing counsel in the course of settlement negotiations.
3. A record in this system of records may be disclosed, as a routine use, to a Member of Congress submitting a request involving an individual, to whom the record pertains, when the individual has requested assistance from the Member with respect to the subject matter of the record.
4. A record in this system of records may be disclosed, as a routine use, to a contractor of the Agency having need for the information in order to perform a contract. Recipients of information shall be required to comply with the requirements of the Privacy Act of 1974, as amended, pursuant to 5 U.S.C. 552a(m).
5. A record related to an International Application filed under the Patent Cooperation Treaty in this system of records may be disclosed, as a routine use, to the International Bureau of the World Intellectual Property Organization, pursuant to the Patent Cooperation Treaty.
6. A record in this system of records may be disclosed, as a routine use, to another federal agency for purposes of National Security review (35 U.S.C. 181) and for review pursuant to the Atomic Energy Act (42 U.S.C. 218(c)).
7. A record from this system of records may be disclosed, as a routine use, to the Administrator, General Services, or his/her designee, during an inspection of records conducted by GSA as part of that agency's responsibility to recommend improvements in records management practices and programs, under authority of 44 U.S.C. 2904 and 2906. Such disclosure shall be made in accordance with the GSA regulations governing inspection of records for this purpose, and any other relevant (*i.e.*, GSA or Commerce) directive. Such disclosure shall not be used to make determinations about individuals.
8. A record from this system of records may be disclosed, as a routine use, to the public after either publication of the application pursuant to 35 U.S.C. 122(b) or issuance of a patent pursuant to 35 U.S.C. 151. Further, a record may be disclosed, subject to the limitations of 37 CFR 1.14, as a routine use, to the public if the record was filed in an application which became abandoned or in which the proceedings were terminated and which application is referenced by either a published application, an application open to public inspection or an issued patent.
9. A record from this system of records may be disclosed, as a routine use, to a Federal, State, or local law enforcement agency, if the USPTO becomes aware of a violation or potential violation of law or regulation.

UNITED STATES PATENT AND TRADEMARK OFFICE

Commissioner for Patents
United States Patent and Trademark Office
P.O. Box 1450
Alexandria, VA 22313-1450
www.uspto.gov

MHKKG/SUN
P.O. BOX 398
AUSTIN, TX 78767

COPY MAILED

MAY 2 7 2008

OFFICE OF PETITIONS

In re Application of
Robert E. Cypher
Application No. 10/978,249
Filed: October 29, 2004
Attorney Docket No. 5681-91600

DECISION ON PETITION
UNDER 37 CFR 1.137(b)

This is a decision on the renewed petition, filed January 15, 2008, which is being treated as a petition under 37 CFR 1.137(b) to revive the instant nonprovisional application for failure to timely notify the U.S. Patent and Trademark (USPTO) of the filing of an application in a foreign country, or under a multinational treaty that requires publication of applications eighteen months after filing. *See* 37 CFR 1.137(f).

The petition is **GRANTED**.

Petitioner states that the instant nonprovisional application is the subject of an application filed in an eighteen-month publication country on October 12, 2005. However, the USPTO was unintentionally not notified of this filing within 45 days subsequent to the filing of the subject application in an eighteen-month publication country.

In view of the above, this application became abandoned pursuant to 35 U.S.C. § 122(b)(2)(B)(iii) and 37 CFR 1.213(c) for failure to timely notify the Office of the filing of an application in a foreign country or under a multilateral international agreement that requires publication of applications 18 months after filing.

A petition to revive an application abandoned pursuant to 35 U.S.C. 122(b)(2)(B)(iii) for failure to notify the USPTO of a foreign filing must be accompanied by:

(1) the required reply which is met by the notification of such filing in a foreign country or under a multinational treaty;
(2) the petition fee as set forth in 37 CFR 1.17(m); and
(3) a statement that the entire delay in filing the required reply from the due date of the reply until the filing of a grantable petition was unintentional.

The instant petition has been found to be in compliance with 37 CFR 1.137(b). Accordingly, the failure to timely notify the USPTO of a foreign or international filing within 45 days after the date of filing of such foreign or international application as provided by 35 U.S.C. § 122(b)(2)(B)(iii) and 37 CFR 1.213(c) is accepted as having been unintentionally delayed.

The previous Request and Certification under 35 U.S.C. § 122(b)(2)(B)(i) has been rescinded. A Notice Regarding Rescission of Nonpublication Request accompanies this decision on petition.

The file does not indicate a change of address has been submitted, although the address given on the petition differs from the address of record. If appropriate, a change of address should be filed in accordance with MPEP 601.03. A courtesy copy of this decision is being mailed to the address given on the petition; however, the Office will mail all future correspondence solely to the address of record.

Telephone inquiries concerning this decision should be directed to Irvin Dingle at (571) 272-3210.

This application is being referred to Technology Center Art Unit 2185 for examination in due course.

Irvin Dingle
Petition Examiner
Office of Petitions

cc: Stephen J. Curran
Meyertons, Hood, Kivlin, Kowert & Goetzel, P.C.
P.O. Box 398
Austin, TX 78767-0398

ATTACHMENT: Notice Regarding Rescission of Nonpublication Request

UNITED STATES PATENT AND TRADEMARK OFFICE

UNITED STATES DEPARTMENT OF COMMERCE
United States Patent and Trademark Office
Address: COMMISSIONER FOR PATENTS
P.O. Box 1450
Alexandria, Virginia 22313-1450
www.uspto.gov

APPLICATION NUMBER	FILING OR 371(C) DATE	FIRST NAMED APPLICANT	ATTY. DOCKET NO./TITLE
10/978,249	10/29/2004	Robert E. Cypher	5681-91600

CONFIRMATION NO. 2468

58467
MHKKG/SUN
P.O. BOX 398
AUSTIN, TX 78767

NONPUBLICATION RESCISSION LETTER

OC000000030125723

Date Mailed: 05/23/2008

Communication Regarding Rescission Of Nonpublication Request and/or Notice of Foreign Filing

Applicant's rescission of the previously-filed nonpublication request and/or notice of foreign filing is acknowledged. The paper has been reflected in the Patent and Trademark Office's (USPTO's) computer records so that the earliest possible projected publication date can be assigned.

The projected publication date is 09/04/2008.

If applicant rescinded the nonpublication request before or on the date of "foreign filing,"[1] then no notice of foreign filing is required.

If applicant foreign filed the application after filing the above application and before filing the rescission, and the rescission did not also include a notice of foreign filing, then a notice of foreign filing (not merely a rescission) is required to be filed within 45 days of the date of foreign filing. See 35 U.S.C. § 122(b)(2)(B)(iii), and Clarification of the United States Patent and Trademark Office's Interpretation of the Provisions of 35 U.S.C. § 122(b)(2)(B)(ii)-(iv), 1272 Off. Gaz. Pat. Office 22 (July 1, 2003).

If a notice of foreign filing is required and is not filed within 45 days of the date of foreign filing, then the application becomes abandoned pursuant to 35 U.S.C. § 122(b)(2)(B)(iii). In this situation, applicant should either file a petition to revive or notify the Office that the application is abandoned. See 37 CFR 1.137(f). Any such petition to revive will be forwarded to the Office of Petitions for a decision. Note that the filing of the petition will not operate to stay any period of reply that may be running against the application.

Questions regarding petitions to revive should be directed to the Office of Petitions at (571) 272-3282.

[1] Note, for purpose of this notice, that "foreign filing" means "filing an application directed to the same invention in another country, or under a multilateral international agreement, that requires publication of applications 18 months after filing".

/idingle/

Office of Data Management, Application Assistance Unit (571) 272-4000, or (571) 272-4200, or 1-888-786-0101

UNITED STATES PATENT AND TRADEMARK OFFICE

Commissioner for Patents
United States Patent and Trademark Office
P.O. Box 1450
Alexandria, VA 22313-1450
www.uspto.gov

Wilbert Hulon Phillips
11301 Olympic Bl. #534
Los Angeles CA 90064

COPY MAILED

JUN 06 2008

OFFICE OF PETITIONS

In re Application of
Wilbert Hulon Phillips
Application No. 10/978,265
Filed: October 30, 2004
Attorney Docket No.TT-103004

ON PETITION

This is a decision on the "Petition to Withdraw the Holding of Abandonment" filed on April 16, 2008. The petition will also be treated as petition under 37 CFR 1.137(b) to revive the abandoned application[1].

The petition to withdraw the holding of abandonment under 37 CFR 1.181 is DISMISSED.

The petition under 37 CFR 1.137(b) is DISMISSED.

The application became abandoned on December 16, 2005, after no response was received to the non-final Office action mailed September 15, 2005, which set a shortened statutory period for reply of three-months from its mailing date. No response was received within the allowable period, and the application became abandoned on December 16, 2005. A Notice of Abandonment was mailed on April 20, 2006.

TREATEMENT UNDER 37 CFR 1.181

In the instant petition, petitioner maintains that the non-final Office action was never received.

When, as in this case petitioner is arguing that an Office communication was not received, petitioner must establish non-receipt of the Office communication in accordance with section 711.03(c) of the *Manual of Patent Examining Procedure* that requires the following:

> [t]he showing requires to establish non-receipt of an Office communication must include a statement from the practitioner stating that the Office communication was not received by the practitioner and attesting to the fact that a search of the file jacket and docket records indicates that the Office communication was not received. A copy of the docket record where the non-received Office communication would have been entered had it been received and docketed must be attached to and referenced in practitioner's statement.

It is noted that petitioner's situation is complicated by the unfortunate demise of the inventor in this application to whom all correspondenc was directed. Notwithstanding, petitioner is not able to provide the statements or documentary evidence necessary to establish that Mr. Phillips did not receive the non-final Office action. The petition to withdraw the holding of abandonment is dismissed accordingly.

[1] Although the petition was filed as a petition under 37 CFR 1.181 to withdraw the holding of abandonment, further review of the petition indicates that the petition is actually a petition under 37 CFR 1.137(b) for unintentional delay in responding to the non-final Office action.

TREATEMENT UNDER 37 CFR 1.137(b)

The petition under 37 CFR 1.137(b) is also dismissed.

Any request for reconsideration of this decision must be submitted within TWO (2) MONTHS from the mail date of this decision. Extensions of time under 37 CFR 1.136(a) are permitted. The reconsideration request should include a cover letter entitled "Renewed Petition" under 37 CFR 1.137(b)."

Effective December 1, 1997, the provisions of 37 CFR 1.137(b) now provide that where the delay in reply was unintentional, a petition may be filed to revive an abandoned application or a lapsed patent pursuant to 37 CFR 1.137(b). A grantable petition pursuant to 37 CFR 1.137(b) must be accompanied by:

(1) the required reply, unless previously filed. In a non-provisional application abandoned for failure to prosecute, the required reply may be met by the filing of a continuing application. In an application or patent, abandoned or lapsed for failure to pay the issue fee, or any portion thereof, the required reply must be the payment of the issue fee or any outstanding balance thereof.

(2) the petition fee as set forth in 37 CFR 1.17(m);

(3) a statement that the entire delay in filing the required reply from the due date for the reply until the filing of a grantable petition pursuant to 37 CFR 1.137(b) was unintentional. The Commissioner may require additional information where there is a question whether the delay was unintentional; and

(4) any terminal disclaimer (and fee set forth in 37 CFR 1.20(d)) required pursuant to 37 CFR 1.137(c).

The instant petition does not satisfy the requirement of item (1) above.

A proper response to the non-final Office action (copy enclosed) was not found with the petition. A proper response would be either an amendment or a continuing application. The renewed petition must be accompanied by a proper response to the non-final Office action.

It is not apparent whether the person signing the statement of unintentional delay was in a position to have firsthand or direct knowledge of the facts and circumstances of the delay at issue. Nevertheless, such statement is being treated as having been made as the result of a reasonable inquiry into the facts and circumstances of such delay. See 37 CFR 10.18(b) and Changes to Patent Practice and Procedure; Final Rule Notice, 62 Fed. Reg. 53131, 53178 (October 10, 1997), 1203 Off. Gaz. Pat. Office 63, 103 (October 21, 1997). In the event that such an inquiry has not been made, petitioner must make such an inquiry. If such inquiry results in the discovery that it is not correct that the entire delay in filing the required reply from the due date for the reply until the filing of a grantable petition pursuant to 37 CFR 1.137(b) was unintentional, petitioner must notify the Office.

There is no indication that the person signing the instant petition was ever given a power of attorney or authorization of agent to prosecute the above-identified application. If the person signing the instant petition desires to receive future correspondence regarding this application, the appropriate power of attorney or authorization of agent must be submitted. While a courtesy copy of this decision is being

mailed to the person signing the instant petition, all future correspondence will be directed to the address of currently of record until such time as appropriate instructions are received to the contrary[2].

The petition fee in amount of $770.00 will be charged to deposit account 09-0007.

Further correspondence with respect to this matter should be addressed as follows:

By mail:

Mail Stop Petitions
Commissioner for Patents
United States Patent and Trademark Office
Box 1450
Alexandria, VA 22313-1450

By facsimile: (571) 273-8300
Attn: Office of Petitions

Telephone inquiries concerning this decision should be directed to the undersigned (571) 272-3222.

Kenya A. McLaughlin
Petitions Attorney
Office of Petitions

cc:
Homer W. Faucett
Ice Miller, LLP
One American Square, Box 82001
Indianapolis, Indiana 46282-0200

Enclosure: Copy of Non-Final Office Action mailed September 15, 2005

[2] The power of attorney and request to change correspondence address filed April 16, 2008, is noted but cannot be entered because it executed by the assignee, but not accompanied by a certificate under 37 CFR 3.73(b) empowering the assignee to take action in this application.

85

UNITED STATES PATENT AND TRADEMARK OFFICE

UNITED STATES DEPARTMENT OF COMMERCE
United States Patent and Trademark Office
Address: COMMISSIONER FOR PATENTS
P.O. Box 1450
Alexandria, Virginia 22313-1450
www.uspto.gov

APPLICATION NO.	FILING DATE	FIRST NAMED INVENTOR	ATTORNEY DOCKET NO.	CONFIRMATION NO.
10/978,265	10/30/2004	Wilbert Hulon Phillips	TT-103004	9631

7590 09/15/2005

Wilbert Hulon Phillips
11301 Olympic Bl. #534
Los Angeles, CA 90064

EXAMINER
HURLEY, KEVIN

ART UNIT	PAPER NUMBER
3611	

DATE MAILED: 09/15/2005

Please find below and/or attached an Office communication concerning this application or proceeding.

COPY

Office Action Summary	Application No.	Applicant(s)	
	10/978,265	PHILLIPS, WILBERT HULON	
	Examiner	Art Unit	
	Kevin Hurley	3611	

-- The MAILING DATE of this communication appears on the cover sheet with the correspondence address --

Period for Reply

A SHORTENED STATUTORY PERIOD FOR REPLY IS SET TO EXPIRE 3 MONTH(S) OR THIRTY (30) DAYS, WHICHEVER IS LONGER, FROM THE MAILING DATE OF THIS COMMUNICATION.

- Extensions of time may be available under the provisions of 37 CFR 1.136(a). In no event, however, may a reply be timely filed after SIX (6) MONTHS from the mailing date of this communication.
- If NO period for reply is specified above, the maximum statutory period will apply and will expire SIX (6) MONTHS from the mailing date of this communication.
- Failure to reply within the set or extended period for reply will, by statute, cause the application to become ABANDONED (35 U.S.C. § 133). Any reply received by the Office later than three months after the mailing date of this communication, even if timely filed, may reduce any earned patent term adjustment. See 37 CFR 1.704(b).

Status

1)☐ Responsive to communication(s) filed on _____.

2a)☐ This action is **FINAL**. 2b)☒ This action is non-final.

3)☐ Since this application is in condition for allowance except for formal matters, prosecution as to the merits is closed in accordance with the practice under *Ex parte Quayle*, 1935 C.D. 11, 453 O.G. 213.

Disposition of Claims

4)☒ Claim(s) 1-3 is/are pending in the application.

4a) Of the above claim(s) _____ is/are withdrawn from consideration.

5)☐ Claim(s) _____ is/are allowed.

6)☒ Claim(s) 1-3 is/are rejected.

7)☐ Claim(s) _____ is/are objected to.

8)☐ Claim(s) _____ are subject to restriction and/or election requirement.

Application Papers

9)☒ The specification is objected to by the Examiner.

10)☐ The drawing(s) filed on _____ is/are: a)☐ accepted or b)☐ objected to by the Examiner.

Applicant may not request that any objection to the drawing(s) be held in abeyance. See 37 CFR 1.85(a).

Replacement drawing sheet(s) including the correction is required if the drawing(s) is objected to. See 37 CFR 1.121(d).

11)☐ The oath or declaration is objected to by the Examiner. Note the attached Office Action or form PTO-152.

Priority under 35 U.S.C. § 119

12)☐ Acknowledgment is made of a claim for foreign priority under 35 U.S.C. § 119(a)-(d) or (f).

a)☐ All b)☐ Some * c)☐ None of:

1.☐ Certified copies of the priority documents have been received.

2.☐ Certified copies of the priority documents have been received in Application No. _____.

3.☐ Copies of the certified copies of the priority documents have been received in this National Stage application from the International Bureau (PCT Rule 17.2(a)).

* See the attached detailed Office action for a list of the certified copies not received.

Attachment(s)

1) ☒ Notice of References Cited (PTO-892)

2) ☐ Notice of Draftsperson's Patent Drawing Review (PTO-948)

3) ☐ Information Disclosure Statement(s) (PTO-1449 or PTO/SB/08) Paper No(s)/Mail Date _____.

4) ☐ Interview Summary (PTO-413) Paper No(s)/Mail Date. _____ .

5) ☐ Notice of Informal Patent Application (PTO-152)

6) ☐ Other: _____.

DETAILED ACTION

Specification

1. The disclosure is objected to because of the following informalities:

The Brief Description of the Drawings does not include Figures 4-7.

Appropriate correction is required.

Claim Rejections - 35 USC § 102

2. The following is a quotation of the appropriate paragraphs of 35 U.S.C. 102 that form the basis for the rejections under this section made in this Office action:

> A person shall be entitled to a patent unless –
>
> (b) the invention was patented or described in a printed publication in this or a foreign country or in public use or on sale in this country, more than one year prior to the date of application for patent in the United States.

3. Claims 1-3 are rejected under 35 U.S.C. 102(b) as being anticipated by Lane et al. 2002/0066611.

Lane et al. discloses (see Fig. 6) an apparatus for deterring instability of a motorcycle comprising:

a support member 16;

a stabilizer link 39 communicating with the support member; and a frame bracket 41 communicating with the stabilizer link, wherein the stabilizer link maintains a substantially constant positional relationship between the support member and the frame bracket;

the support member is attached to a first portion of the motorcycle, the frame bracket is secured to a second portion of the motorcycle, and the stabilizer is adjusted to a predetermined

setting such that the support member in combination with the stabilizer link and frame bracket cooperate to deter instability of he motorcycle;

the support member is a portion of a cage bracket, and in which the support bracket provides attachment apertures for attachment of the cage bracket to the first portion of the motorcycle.

Conclusion

4. The prior art made of record and not relied upon is considered pertinent to applicant's disclosure. The cited references disclose engine stabilizer mounts for motorcycles.

5. Any inquiry concerning this communication or earlier communications from the examiner should be directed to Kevin Hurley whose telephone number is 571-272-6646. The examiner can normally be reached on Monday-Friday 9:30-5:00.

If attempts to reach the examiner by telephone are unsuccessful, the examiner's supervisor, Lesley Morris can be reached on 571-272-6651. The fax phone number for the organization where this application or proceeding is assigned is 571-273-8300.

Information regarding the status of an application may be obtained from the Patent Application Information Retrieval (PAIR) system. Status information for published applications may be obtained from either Private PAIR or Public PAIR. Status information for unpublished applications is available through Private PAIR only. For more information about the PAIR system, see http://pair-direct.uspto.gov. Should you have questions on access to the Private PAIR system, contact the Electronic Business Center (EBC) at 866-217-9197 (toll-free).

Kevin Hurley
Primary Examiner
Art Unit 3611

September 6, 2005

UNITED STATES PATENT AND TRADEMARK OFFICE

Commissioner for Patents
United States Patent and Trademark Office
P.O. Box 1450
Alexandria, VA 22313-1450
www.uspto.gov

ICE MILLER LLP
ONE AMERICAN SQUARE, SUITE 3100
INDIANAPOLIS IN 46282-0200

COPY MAILED
AUG 2 8 2008

In re Application of

Wilbert Hulon Philips

Application No. 10/978,265

Filing Date: October 30, 2004

Attorney Docket No. TT-103004

ON PETITION

This is a decision on the renewed petition under 37 CFR 1.137(b), filed August 5, 2008, and in duplicate on August 6, 2008. This is also a decision on the renewed petition under 37 CFR 1.181(a) to withdraw the holding of abandonment which was also filed August 5, 2008, and in duplicate on August 6, 2008.

The renewed petition under 37 CFR 1.137(b) is **GRANTED**.

The renewed petition under 37 CFR 1.181 is **dismissed as moot**.

This application became abandoned for failure to respond in a timely manner to the non-final Office action mailed September 15, 2005. The notice allowed a shortened statutory period for reply of three months from its mailing date. No reply was received within the allowable period, and the application became abandoned on December 16, 2005. A Notice of Abandonment was mailed April 20, 2006.

The amendment filed August 5, 2008, is noted.

37 CFR 1.137(b)(3) requires a statement that the entire delay in filing the required reply from the due date for the reply until the filing of a grantable petition pursuant to 37 CFR 1.137(b) was unintentional. If the statement contained in the instant petition varies from the language required by 37 CFR 1.137(b)(3), the statement contained in the instant petition is being construed as the statement required by 37 CFR 1.137(b)(3) and petitioner must notify the Office if this is not a correct interpretation of the statement contained in the instant petition.

As the application is being revived pursuant to 37 CFR 1.137(b), there is no relief that can be provided by the petition under 37 CFR 1.181 to withdraw the holding of abandonment. The petition under 37 CFR 1.181 to withdraw the holding of abandonment is dismissed as moot, accordingly.

The application is being forwarded to Technology Center 3600, GAU 3611 for further processing.

Telephone inquiries concerning this decision should be directed to the undersigned at (571) 272-3222.

Kenya A. McLaughlin
Petitions Attorney
Office of Petitions

UNITED STATES PATENT AND TRADEMARK OFFICE

Commissioner for Patents
United States Patent and Trademark Office
P.O. Box 1450
Alexandria, VA 22313-1450
www.uspto.gov

TEXAS INSTRUMENTS INCORPORATED
P.O. BOX 655474, M/S 3999
DALLAS TX 75265

COPY MAILED

JAN 27 2005

OFFICE OF PETITIONS

In re Application of Narendar Shankar, Erdal Paksoy and Derrill Sturgeon Application No. 10/978,276 Filed: October 29, 2004 For: SYSTEM AND METHOD FOR SECURE COLLABORATIVE TERMINAL IDENTITY AUTHENTICATION BETWEEN A WIRELESS COMMUNICATION DEVICE AND A WIRELESS OPERATOR	DECISION REFUSING STATUS UNDER 37 CFR 1.47(a)

This is in response to the "Petition Under 37 CFR 1.47(a)," filed October 29, 2004.

The petition is dismissed.

Rule 47 applicant is given TWO MONTHS from the mailing date of this decision to reply, correcting the below-noted deficiencies. Any reply should be entitled "Request for Reconsideration of Petition Under 37 CFR 1.47(a)," and should only address the deficiencies noted below, except that the reply may include an oath or declaration executed by the non-signing inventor. **FAILURE TO RESPOND WILL RESULT IN ABANDONMENT OF THE APPLICATION.** Any extensions of time will be governed by 37 CFR 1.136(a).

The above-identified application was filed on October 29, 2004 without a completely executed oath or declaration and naming Narendar Shankar, Erdal Paksoy and Derrill Sturgeon as joint inventors.

A grantable petition under 37 CFR 1.47(a) requires:

> (1) proof that the non-signing inventor cannot be reached or refuses to sign the oath or declaration after having been presented with the application papers (specification, claims and drawings);

(2) an acceptable oath or declaration in compliance with 35 U.S.C. §§ 115 and 116;

(3) the petition fee; and

(4) a statement of the last known address of the non-signing inventor.

Applicant lacks item (3), as set forth above.

The fee required for a petition under 37 CFR 1.47 has not been submitted, nor has applicant provided an authorization to charge the required fee to a deposit account. *See 37 CFR 1.17(g)*. As such, the petition cannot be reviewed on the merits at this time. The required petition fee must be submitted before a review of the instant petition on the merits may occur.

Further correspondence with respect to this matter should be addressed as follows:

By mail: Mail Stop Petition
Commissioner for Patents
Box 1450
Alexandria, VA 22313

By FAX: (703) 872-9306
Attn: Office of Petitions

By hand: Customer Service Window
Randolph Building
401 Dulany Street
Alexandria, VA 22314

Telephone inquiries related to this decision should be directed to the undersigned at (571)272-3228.

Edward J. Tannouse
Petitions Attorney
Office of Petitions
United States Patent and Trademark Office

UNITED STATES PATENT AND TRADEMARK OFFICE

Commissioner for Patents
United States Patent and Trademark Office
P.O. Box 1450
Alexandria, VA 22313-1450
www.uspto.gov

TEXAS INSTRUMENTS INCORPORATED
P.O. BOX 655474, M/S 3999
DALLAS, TX 75265

COPY MAILED

JAN 18 2006

OFFICE OF PETITIONS

In re Application of
Narendar Shankar, Erdal Paksoy and
Derrill Sturgeon
Application No. 10/978,276
Filed: October 29, 2004
For: SYSTEM AND METHOD FOR SECURE COLLABORATIVE TERMINAL IDENTITY AUTHENTICATION BETWEEN A WIRELESS COMMUNICATION DEVICE AND A WIRELESS OPERATOR

DECISION GRANTING PETITION
UNDER 37 CFR 1.47(a)

This is in response to the "Authorization to Charge Deposit Account," filed February 23, 2005, and supplemented on January 5, 2006, which has been treated as a "Request For Reconsideration of Petition Under 37 CFR 1.47(a)." The application was recently forwarded to this office for review.

The petition is **granted**.

Petitioner has shown that non-signing inventor Derrill Sturgeon has refused to join in the filing of the above-identified application.

The above-identified application and papers have been reviewed and found in compliance with 37 CFR 1.47(a). This application is hereby accorded Rule 1.47(a) status. As provided in Rule 1.47(c), this Office will forward notice of this application's filing to the non-signing inventor at the address given in the petition. Notice of the filing of this application will also be published in the Official Gazette.

The file is being forwarded to Technology Center 2100 for examination *in due course.*

Telephone inquiries regarding this decision should be directed to the undersigned at (571) 272-3228.

Edward J. Tannouse
Petitions Attorney
Office of Petitions
Office of the Deputy Commissioner
for Patent Examination Policy

UNITED STATES PATENT AND TRADEMARK OFFICE

Commissioner for Patents
United States Patent and Trademark Office
P.O. Box 1450
Alexandria, VA 22313-1450
www.uspto.go

DERRILL STURGEON
3629 CAPSTONE LANE
PLANO, TX 75074

COPY MAILED

JAN 18 2006

OFFICE OF PETITIONS

In re Application of
Narendar Shankar, Erdal Paksoy and Derrill Sturgeon
Application No. 10/978,276
Filed: October 29, 2004
For: SYSTEM AND METHOD FOR SECURE COLLABORATIVE TERMINAL IDENTITY AUTHENTICATION BETWEEN A WIRELESS COMMUNICATION DEVICE AND A WIRELESS OPERATOR

Dear DERRILL STURGEON:

You are named as a joint inventor in the above identified United States patent application, filed under the provisions of 35 U.S.C. 116 (United States Code), and 37 CFR 1.47(a), Rules of Practice in Patent Cases. Should a patent be granted on the application you will be designated therein as a joint inventor.

As a named inventor you are entitled to inspect any paper in the file wrapper of the application, order copies of all or any part thereof (at a prepaid cost per 37 CFR 1.19) or make your position of record in the application. Alternatively, you may arrange to do any of the preceding through a registered patent attorney or agent presenting written authorization from you. If you care to join the application, counsel of record (see below) would presumably assist you. Joining in the application would entail the filing of an appropriate oath or declaration by you pursuant to 37 CFR 1.63.

Telephone inquiries regarding this communication should be directed to the undersigned at (571) 272-3228. Requests for information regarding your application should be directed to the File Information Unit at (703) 308-2733. Information regarding how to pay for and order a copy of the application, or a specific paper in the application, should be directed to Certification Division at (703) 308-9726 or 1 (800) 972-6382 (outside the Washington D.C. area).

Edward J. Tannouse
Petitions Attorney
Office of Petitions
Office of the Deputy Commissioner
for Patent Examination Policy

TEXAS INSTRUMENTS INCORPORATED
P.O. BOX 655474, M/S 3999
DALLAS, TX 75265

UNITED STATES PATENT AND TRADEMARK OFFICE

Commissioner for Patents
United States Patent and Trademark Office
P.O. Box 1450
Alexandria, VA 22313-1450
www.uspto.gov

TEXAS INSTRUMENTS INCORPORATED
P O BOX 655474, M/S 3999
DALLAS, TX 75265

COPY MAILED
AUG 15 2007
OFFICE OF PETITIONS

In re Application of

Shankar, et al. :

Application No. 10/978,276

: DECISION ON PETITION

Filed: October 29, 2004

:

Attorney Docket No. TI-37382

This is a decision on the petition under 37 CFR 1.137(b), filed May 22, 2007, to revive the above-identified application.

The petition is **GRANTED**.

The above-cited application became abandoned for failure to reply in a timely manner to the non-final Office action mailed October 20, 2006, which set a shortened statutory period for reply of three (3) months from its mailing date. No response was received within the allowable, and the application became abandoned on January 21, 2007.

The amendment filed May 22, 2007, is noted.

The application is being forwarded to Technology Center 2100, GAU 2164 for further processing.

Telephone inquiries concerning this decision should be directed to the undersigned at (571) 272-3222.

Kenya A. McLaughlin
Petitions Attorney
Office of Petitions

UNITED STATES PATENT AND TRADEMARK OFFICE

Commissioner for Patents
United States Patent and Trademark Office
P.O. Box 1450
Alexandria, VA 22313-1450
www.uspto.gov

WARD & OLIVO
care of James L. Lynch
382 Springfield Avenue
Summit NJ 07901

COPY MAILED
JUL 23 2008

In re Application of	:	
RATHUS et al.	:	DECISION ON PETITION
Application No. 10/978,305	:	
Filed: 11/01/2004	:	
Attorney Docket No. 660-070	:	

This is a decision on the petition under 37 CFR 1.137(b), filed April 14, 2008, to revive the above-identified application.

The above-identified application became abandoned for failure to file a timely response to the Notice of Non-Compliant Amendment, mailed August 8, 2007, which set an extendable period of one month, or thirty days, whichever was longer, to reply. The above-identified application became abandoned on September 9, 2007. On February 26, 2008, the Office mailed a Notice of Abandonment.

Petitioner has met the requirements to revive the above-identified application pursuant to 37 CFR 1.137(b). Petitioner submitted the required reply, paid the petition fee, and made the proper statement of unintentional delay. Accordingly, the petition is **granted.**

This application is being referred to Technology Center AU 2887.

Telephone inquiries specific to this decision may be directed to the undersigned at (571) 272-3211. All other inquiries concerning either the examination procedures or status of the application should be directed to the Technology Center.

C. T. Donnell

Christina Tartera Donnell
Senior Petitions Attorney
Office of Petitions

30 JUN 2005

UNITED STATES PATENT AND TRADEMARK OFFICE

COMMISSIONER FOR PATENTS
UNITED STATES PATENT AND TRADEMARK OFFICE
P.O. BOX 1450
ALEXANDRIA, VA 22313-1450
www.uspto.gov

LUMEN INTELLECTUAL PROPERTY SERVICES, INC.
2345 YALE STREET, 2ND FLOOR
PALO ALTO CA 94306

In re Application of	:	
WANG et al.	:	
Application No.: 10/978,313	:	
Filing Date: 21 October 2004	:	DECISION
Attorney's Docket No.: SHZ-104/PCT/US	:	
For: ROBUST AND INVARIANT AUDIO	:	
PATTERN MATCHING	:	

This decision is issued in response to applicants' "Petition Under 37 CFR 1.182" filed 29 April 2005 which requests that the present application be treated as having been filed under 35 U.S.C. 371 as a U.S. National Phase of PCT/US03/12126. The required $400 petition fee has been paid.

BACKGROUND

On 21 October 2004, applicants filed the present U.S. application. The application was treated as an application filed under 35 U.S.C. 111(a).

On 29 April 2005, applicants filed the petition considered herein. The petition states that the present application was intended as a national stage filing under 35 U.S.C. 371, and requests that the application be converted to such an application.

DISCUSSION

Any intended filing of an international application as a national stage application must clearly and unambiguously be identified as such and must satisfy all of the conditions set forth in 35 U.S.C. 371(c). See 37 CFR 1.495(g):

> The documents and fees submitted ... must be clearly identified as a submission to enter the national stage under 35 U.S.C. 371, otherwise the submission will be considered as being made under 35 U.S.C. 111.

In addition, section 1893.03(a) of the MPEP states the following:

> If there are any conflicting instructions as to whether the filing is under 35 U.S.C. 111(a) or 35 U.S.C. 371, the application will be accepted as filed under 35 U.S.C. 111(a).

The materials filed by applicants to initiate this application included a "Utility Patent Application Transmittal" (Form PTO/SB/05) which specifically states that it is for use "only for new nonprovisional application under 37 CFR 1.53(b)." The use of this transmittal letter is inconsistent with the intent to enter the national stage under 35 U.S.C. 371. Accordingly, the filed application was properly treated as a filing under 35 U.S.C. 111(a).[1]

Because the application was properly treated under 35 U.S.C. 111(a), the petition to convert the application to a national stage under 35 U.S.C. 371 is only grantable if accompanied by a showing of sufficient cause for such a conversion (i.e., the loss of patent rights or lack of other available remedies). Applicant here has not made such a showing. Pursuant to 37 CFR 1.78, the present application can be corrected to claim priority to the international application, if so desired. In the alternative, applicants could file a separate national stage application (accompanied by a petition for revival of the international application) and thereby initiate the desired national stage application. Based on the above, the present record does not support a conversion of the application to a national stage under 35 U.S.C. 371.

CONCLUSION

Applicants' petition to convert the application from an application filed under 35 U.S.C. 111(a) to a national stage application under 35 U.S.C. 371 is **DISMISSED** without prejudice. Processing of this application under 35 U.S.C. 111(a) will continue.

Any request for reconsideration of this decision on the merits must be filed within **TWO (2) MONTHS** of the mail date of the present decision. Any such request should be entitled "Renewed Petition Under 37 CFR 1.182." No additional petition fee is required.

Please direct further correspondence with respect to this matter to Mail Stop PCT, Commissioner For Patents, Office of PCT Legal Administration, PO Box 1450, Alexandria, Virginia 22313-1450, with the contents marked to the attention of the Office Of PCT Legal Administration.

Cynthia M. Kratz

Cynthia M. Kratz
Attorney Advisor
Office Of PCT Legal Administration
Telephone: (571) 272-3286
Facsimile: (571) 273-0459

UNITED STATES PATENT AND TRADEMARK OFFICE

Commissioner for Patents
United States Patent and Trademark Office
P.O. Box 1450
Alexandria, VA 22313-1450
www.uspto.gov

COPY MAILED

JUN 0 5 2009

OFFICE OF PETITIONS

FULBRIGHT & JAWORSKI L.L.P
2200 ROSS AVENUE
SUITE 2800
DALLAS, TX 75201-2784

In re Application of Wang et al.	:	Decision Dismissing Petition
Application No. 10/978,313	:	Under 37 CFR § 1.78(a)(3) and
Filing Date: October 21, 2004	:	37 CFR § 1.78(a)(6)
Attorney Docket No. LMRK-0024	:	

This is a decision on the petition under 37 CFR §§ 1.78(a)(3) and 1.78(a)(6), filed May 7, 2009, to accept an unintentionally delayed claim under 35 U.S.C. §§ 120 and 119(e) for the benefit of priority to the prior-filed nonprovisional and provisional applications set forth in the concurrently filed amendment.

The petition is **DISMISSED**.

A petition for acceptance of a claim for late priority under 37 CFR §§ 1.78(a)(3) and 1.78(a)(6) is only applicable to those applications filed on or after November 29, 2000 and after the expiration of the period specified in 37 CFR §§ 1.78(a)(2)(ii) and 1.78(a)(5)(ii). In addition, the petition under 37 CFR §§ 1.78(a)(3) and 1.78(a)(6) must be accompanied by:

(1) the reference required by 35 U.S.C. §§ 120 and 119(e) and 37 CFR §§ 1.78(a)(2)(i) and 1.78(a)(5)(i) of the prior-filed application, unless previously submitted;
(2) the surcharge set forth in § 1.17(t); and
(3) a statement that the entire delay between the date the claim was due under 37 CFR §§ 1.78(a)(2)(ii) and 1.78(a)(5)(ii) and the date the claim was filed was unintentional. The Director may require additional where there is a question whether the delay was unintentional.

The petition does not comply with item (1).

37 CFR § 1.78(a)(2)(i) requires that any nonprovisional application claiming the benefit of one or more prior-filed copending nonprovisional applications must contain or be amended to contain a reference to each such prior-filed application, identifying it by application number (consisting of the series code and serial number) *and indicating the relationship of the applications.*

The application was filed October 21, 2004. The first paragraph of the specification stated,

> This application is cross-referenced to and claims priority from PCT International Application PCT/US03/12126 filed on April 18, 2003, and U.S. Provisional Application No. 60/376,055 filed on April 25, 2002, which are hereby incorporated by reference.

An amendment filed October 31, 2005, changed the first paragraph of the specification to state:

> This application is a continuation of PCT International Application PCT/US03/12126 filed on April 18, 2003, which claims priority from U.S. Provisional Application No. 60/376,055 filed on April 25, 2002, each of which are hereby incorporated by reference.

The amendment filed with the petition on May 7, 2009, seeks to amend the first paragraph of the specification in order to have the paragraph state:

> This application claims priority to PCT International Application PCT/US03/12126 filed on April 18, 2003, under 35 U.S.C. § 120, which claims priority from U.S. Provisional Application No. 60/376,055, filed on April 25, 2002, each of which are hereby incorporated by reference.

The amendment filed May 7, 2009, seeks to delete the language indicating the application is a continuation of the PCT application and simply state the instant application is claiming priority under 35 U.S.C. § 120. However, the specification as amended will not indicate the exact relationship between the instant application and the PCT application. The relationship between the applications is whether the instant application is a continuation, divisional, or continuation-in-part of the PCT application.

The following example illustrates a proper claim for priority: "This application is a continuation of PCT/US--/---- filed ----, which claims the benefit of Provisional Application no. 60/------, filed -----."

Before the petition can be granted, petitioner must submit a substitute amendment and a renewed petition under 37 CFR 1.78(a)(3).[1]

Further correspondence with respect to this matter should be addressed as follows:

By mail: Mail Stop Petition
Commissioner for Patents
P.O. Box 1450
Alexandria, VA 22313-1450

By facsimile: (571) 273-8300
Attn: Office of Petitions

---

[1] The claim for priority may also be made in an Application Data Sheet in compliance with 37 CFR 1.121 and 37 CFR 1.76(b)(5).

By hand: U.S. Patent and Trademark Office
Customer Service Window
Randolph Building
401 Dulany Street
Alexandria, VA 22314

Telephone inquiries regarding this communication should be directed to Petitions Attorney Steven Brantley at (571) 272-3203.

Charles Steven Brantley
Senior Petitions Attorney
Office of Petitions

UNITED STATES PATENT AND TRADEMARK OFFICE

Commissioner for Patents
United States Patent and Trademark Office
P.O. Box 1450
Alexandria, VA 22313-1450
www.uspto.gov

FULBRIGHT & JAWORSKI L.L.P
2200 ROSS AVENUE
SUITE 2800
DALLAS, TX 75201-2784

COPY MAILED

JUL 14 2009

OFFICE OF PETITIONS

In re Application of Wang et al.	:	Decision Granting Petition
Application No. 10/978,313	:	Under 37 CFR § 1.78(a)(3) and
Filing Date: October 21, 2004	:	37 CFR § 1.78(a)(6)
Attorney Docket No. LMRK-0024	:	

This is a decision on the petition under 37 CFR §§ 1.78(a)(3) and 1.78(a)(6), filed June 17, 2009, to accept an unintentionally delayed claim under 35 U.S.C. §§ 120 and 119(e) for the benefit of priority to the prior-filed nonprovisional and provisional applications set forth in the concurrently filed amendment.

The petition is **granted**.

A petition for acceptance of a claim for late priority under 37 CFR §§ 1.78(a)(3) and 1.78(a)(6) is only applicable to those applications filed on or after November 29, 2000. Further, the petition is appropriate only after the expiration of the period specified in 37 CFR §§ 1.78(a)(2)(ii) and 1.78(a)(5)(ii). In addition, the petition under 37 CFR §§ 1.78(a)(3) and 1.78(a)(6) must be accompanied by:

(1) the reference required by 35 U.S.C. §§ 120 and 119(e) and 37 CFR §§ 1.78(a)(2)(i) and 1.78(a)(5)(i) of the prior-filed application, unless previously submitted;

(2) the surcharge set forth in § 1.17(t); and

(3) a statement that the entire delay between the date the claim was due under 37 CFR §§ 1.78(a)(2)(ii) and 1.78(a)(5)(ii) and the date the claim was filed was unintentional. The Director may require additional where there is a question whether the delay was unintentional.

Additionally, the instant nonprovisional application must be pending at the time of filing of the reference to the prior-filed provisional application(s) as required by 37 CFR 1.78(a)(5)(ii). Further, the nonprovisional application(s) claiming the benefit of the prior-filed provisional application(s) must have been filed within twelve months of the filing date of the prior-filed provisional application(s).

All of the above requirements having been satisfied, the late claim for benefit of priority to the prior-filed applications under 35 U.S.C. §§ 120 and 119(e) is accepted as being unintentionally delayed.

The granting of the petition to accept the delayed benefit claim to the prior-filed applications under 37 CFR §§ 1.78(a)(3) and 1.78(a)(6) should not be construed as meaning that this application is entitled to the benefit of the filing date of the prior-filed applications. In order for this application to be entitled to the benefit of the prior-filed applications, all other requirements under 35 U.S.C. §§ 120 and 1.78(a)(1) and (a)(2) and under 35 U.S.C. § 119(e) and 37 CFR 1.78(a)(4) and (a)(5) must be met. Similarly, the fact that the corrected Filing Receipt accompanying this decision on petition includes the prior-filed applications should not be construed as meaning that applicant is entitled to the claim for benefit of priority to the prior-filed applications noted thereon. Accordingly, the examiner will, in due course, consider this benefit claim and determine whether the application is entitled to the benefit of the earlier filing date.

A corrected Filing Receipt, which includes the priority claim to the prior-filed applications, accompanies this decision on petition.

The application is being forwarded to Technology Center Art Unit 2626 for consideration by the examiner of the claims of priority under 35 U.S.C. § 120 and 35 U.S.C. § 119(e.

Any inquiries concerning this decision may be directed to Senior Petitions Attorney Steven Brantley at (571) 272-3203. All other inquiries concerning either the examination procedures or status of the application should be directed to the Technology Center.

Charles Steven Brantley
Senior Petitions Attorney
Office of Petitions

ATTACHMENT: Corrected Filing Receipt

UNITED STATES PATENT AND TRADEMARK OFFICE

UNITED STATES DEPARTMENT OF COMMERCE
United States Patent and Trademark Office
Address: COMMISSIONER FOR PATENTS
P.O. Box 1450
Alexandria, Virginia 22313-1450
www.uspto.gov

APPLICATION NUMBER	FILING or 371(c) DATE	GRP ART UNIT	FIL FEE REC'D	ATTY.DOCKET.NO	TOT CLAIMS	IND CLAIMS
10/978,313	10/21/2004	2626	647	69323/P006US/10511469	18	1

CONFIRMATION NO. 9222

CORRECTED FILING RECEIPT

29053
FULBRIGHT & JAWORSKI L.L.P
2200 ROSS AVENUE
SUITE 2800
DALLAS, TX 75201-2784

OC000000036907194

Date Mailed: 07/13/2009

Receipt is acknowledged of this non-provisional patent application. The application will be taken up for examination in due course. Applicant will be notified as to the results of the examination. Any correspondence concerning the application must include the following identification information: the U.S. APPLICATION NUMBER, FILING DATE, NAME OF APPLICANT, and TITLE OF INVENTION. Fees transmitted by check or draft are subject to collection. Please verify the accuracy of the data presented on this receipt. **If an error is noted on this Filing Receipt, please submit a written request for a Filing Receipt Correction. Please provide a copy of this Filing Receipt with the changes noted thereon. If you received a "Notice to File Missing Parts" for this application, please submit any corrections to this Filing Receipt with your reply to the Notice. When the USPTO processes the reply to the Notice, the USPTO will generate another Filing Receipt incorporating the requested corrections**

Applicant(s)

Avery Li-Chun Wang, Palo Alto, CA;
Daniel Culbert, Sunnyvale, CA;

Power of Attorney: The patent practitioners associated with Customer Number 000029053

Domestic Priority data as claimed by applicant

This application is a CON of PCT/US03/12126 04/18/2003
which claims benefit of 60/376,055 04/25/2002

Foreign Applications

If Required, Foreign Filing License Granted: 12/08/2004

The country code and number of your priority application, to be used for filing abroad under the Paris Convention, is **US 10/978,313**

Projected Publication Date: Not Applicable

Non-Publication Request: No

Early Publication Request: No
**** SMALL ENTITY ****

Title

ROBUST AND INVARIANT AUDIO PATTERN MATCHING

Preliminary Class

704

PROTECTING YOUR INVENTION OUTSIDE THE UNITED STATES

Since the rights granted by a U.S. patent extend only throughout the territory of the United States and have no effect in a foreign country, an inventor who wishes patent protection in another country must apply for a patent in a specific country or in regional patent offices. Applicants may wish to consider the filing of an international application under the Patent Cooperation Treaty (PCT). An international (PCT) application generally has the same effect as a regular national patent application in each PCT-member country. The PCT process **simplifies** the filing of patent applications on the same invention in member countries, but **does not result** in a grant of "an international patent" and does not eliminate the need of applicants to file additional documents and fees in countries where patent protection is desired.

Almost every country has its own patent law, and a person desiring a patent in a particular country must make an application for patent in that country in accordance with its particular laws. Since the laws of many countries differ in various respects from the patent law of the United States, applicants are advised to seek guidance from specific foreign countries to ensure that patent rights are not lost prematurely.

Applicants also are advised that in the case of inventions made in the United States, the Director of the USPTO must issue a license before applicants can apply for a patent in a foreign country. The filing of a U.S. patent application serves as a request for a foreign filing license. The application's filing receipt contains further information and guidance as to the status of applicant's license for foreign filing.

Applicants may wish to consult the USPTO booklet, "General Information Concerning Patents" (specifically, the section entitled "Treaties and Foreign Patents") for more information on timeframes and deadlines for filing foreign patent applications. The guide is available either by contacting the USPTO Contact Center at 800-786-9199, or it can be viewed on the USPTO website at http://www.uspto.gov/web/offices/pac/doc/general/index.html.

For information on preventing theft of your intellectual property (patents, trademarks and copyrights), you may wish to consult the U.S. Government website, http://www.stopfakes.gov. Part of a Department of Commerce initiative, this website includes self-help "toolkits" giving innovators guidance on how to protect intellectual property in specific countries such as China, Korea and Mexico. For questions regarding patent enforcement issues, applicants may call the U.S. Government hotline at 1-866-999-HALT (1-866-999-4158).

LICENSE FOR FOREIGN FILING UNDER

Title 35, United States Code, Section 184

Title 37, Code of Federal Regulations, 5.11 & 5.15

GRANTED

The applicant has been granted a license under 35 U.S.C. 184, if the phrase "IF REQUIRED, FOREIGN FILING LICENSE GRANTED" followed by a date appears on this form. Such licenses are issued in all applications where the conditions for issuance of a license have been met, regardless of whether or not a license may be required as

set forth in 37 CFR 5.15. The scope and limitations of this license are set forth in 37 CFR 5.15(a) unless an earlier license has been issued under 37 CFR 5.15(b). The license is subject to revocation upon written notification. The date indicated is the effective date of the license, unless an earlier license of similar scope has been granted under 37 CFR 5.13 or 5.14.

This license is to be retained by the licensee and may be used at any time on or after the effective date thereof unless it is revoked. This license is automatically transferred to any related applications(s) filed under 37 CFR 1.53(d). This license is not retroactive.

The grant of a license does not in any way lessen the responsibility of a licensee for the security of the subject matter as imposed by any Government contract or the provisions of existing laws relating to espionage and the national security or the export of technical data. Licensees should apprise themselves of current regulations especially with respect to certain countries, of other agencies, particularly the Office of Defense Trade Controls, Department of State (with respect to Arms, Munitions and Implements of War (22 CFR 121-128)); the Bureau of Industry and Security, Department of Commerce (15 CFR parts 730-774); the Office of Foreign AssetsControl, Department of Treasury (31 CFR Parts 500+) and the Department of Energy.

NOT GRANTED

No license under 35 U.S.C. 184 has been granted at this time, if the phrase "IF REQUIRED, FOREIGN FILING LICENSE GRANTED" DOES NOT appear on this form. Applicant may still petition for a license under 37 CFR 5.12, if a license is desired before the expiration of 6 months from the filing date of the application. If 6 months has lapsed from the filing date of this application and the licensee has not received any indication of a secrecy order under 35 U.S.C. 181, the licensee may foreign file the application pursuant to 37 CFR 5.15(b).

UNITED STATES PATENT AND TRADEMARK OFFICE

Commissioner for Patents
United States Patent and Trademark Office
P.O. Box 1450
Alexandria, VA 22313-1450
www.uspto.gov

MAILED
FROM DIRECTORS OFFICE

FEB 1 0 2006

TECHNOLOGY CENTER 3600

CRAIG W. RODDY
HALLIBURTON ENERGY SERVICES
P.O. BOX 1431
DUNCAN, OK 73536-0440

In re application of Jiten Chatterji et al. Application No. 10/978,318 Filed: October 29, 2004 For: FOAMED TREATMENT FLUIDS, FOAMING ADDITIVES AND ASSOCIATED METHODS	: : : :	**DECISION ON PETITION TO MAKE SPECIAL (APPLICANT'S AGE)**

This is a decision on the petition submitted on October 29, 2004 under 37 CFR 1.102 (c) to make the above-identified application special under the accelerated examination procedure set forth in MPEP 708.02, Section IV: Applicant's Age.

The petition is **GRANTED**.

An application may be accorded special status upon the filing of a petition providing evidence showing that the applicant is at least 65 years old. Such a showing may be provided by evidence such as a birth certificate or a statement from the applicant.

The evidence submitted with the petition is a declaration indicating Mr. Chatterji is at least 65 years of age.

The examiner is directed (1) to make an interference search for possible interfering applications, (2) to promptly examine this application out of turn, and (3) if any interfering application is discovered, to examine such application simultaneously and state in the first official letter of such application that it is being taken out of turn because of a possible interference.

Petitioner is advised that this application will continue to be special, throughout its entire prosecution and pendency, including interference or appeal, if any, only if petitioners makes a prompt ***bona fide*** effort, in response to each Office action, to place the application in condition for allowance, even if it is necessary to conduct an interview with the examiner to accomplish this purpose.

SUMMARY: Petition to Make Special **GRANTED**.

Kenneth J. Dorner
Special Programs Examiner
Technology Center 3600
(571) 272-6587

KJD/slb: 02/08/05

OIPE JC88
MAY 1 2 2005
PATENT & TRADEMARK OFFICE

PTO/SB/83 (09-04)
Approved for use through 11/30/2005. OMB 0651-0035
U.S. Patent and Trademark Office; U.S. DEPARTMENT OF COMMERCE
Under the Paperwork Reduction Act of 1995, no persons are required to respond to a collection of information unless it displays a valid OMB control number.

IFW
Pet. Dec.

REQUEST FOR WITHDRAWAL AS ATTORNEY OR AGENT AND CHANGE OF CORRESPONDENCE ADDRESS

Application Number	10/978,321
Filing Date	10/29/04
First Named Inventor	Eduardo Chi Sing
Art Unit	Unassigned
Examiner Name	Unassigned
Attorney Docket Number	034298-203

To: Commissioner for Patents
P.O. Box 1450
Alexandria, VA 22313-1450

Approved
JMStone
Jacqueline M. Stone, Director
Technology Center 1700
7/15/05

Please withdraw me as attorney or agent for the above identified patent application, and

☒ all the attorneys/agents of record.

☐ all the attorneys/agents (with registration numbers) listed on the attached paper(s), or

☐ all the attorneys/agents associated with Customer Number

NOTE: This box can only be checked when the power of attorney of record in the application is to all the practitioners associated with a customer number.

The reasons for this request are: client transfer

CORRESPONDENCE ADDRESS

1. ☐ The correspondence address is NOT affected by this withdrawal.

2. ☒ Change the correspondence address and direct all future correspondence to:

☐ The address associated with Customer Number:

OR

☒ Firm or Individual Name	Thomas Miller, Esq. Marshall, Gerstein & Borun				
Address	233 South Wacker Drive 6300 Sears Tower				
City	Chicago	State	IL	ZIP	60606-6402
Country	USA				
Telephone	312.474.6300	Fax	312.474.0448		
Signature					
Name	Adrienne Yeung	Registration No.	44,000		
Date	5/6/05	Telephone No.	408-292-5800		

NOTE: Withdrawal is effective when approved rather than when received. Unless there are at least 30 days between approval of withdrawal and the expiration date of a time period for response or possible extension period, the request to withdraw is normally disapproved.

This collection of information is required by 37 CFR 1.36. The information is required to obtain or retain a benefit by the public which is to file (and by the USPTO to process) an application. Confidentiality is governed by 35 U.S.C. 122 and 37 CFR 1.11 and 1.14. This collection is estimated to take 12 minutes to complete, including gathering, preparing, and submitting the completed application form to the USPTO. Time will vary depending upon the individual case. Any comments on the amount of time you require to complete this form and/or suggestions for reducing this burden, should be sent to the Chief Information Officer, U.S. Patent and Trademark Office, U.S. Department of Commerce, P.O. Box 1450, Alexandria, VA 22313-1450. DO NOT SEND FEES OR COMPLETED FORMS TO THIS ADDRESS. SEND TO: **Commissioner for Patents, P.O. Box 1450, Alexandria, VA 22313-1450.**

UNITED STATES PATENT AND TRADEMARK OFFICE

UNITED STATES DEPARTMENT OF COMMERCE
United States Patent and Trademark Office
Address: COMMISSIONER FOR PATENTS
P.O. Box 1450
Alexandria, Virginia 22313-1450
www.uspto.gov

CROMPTON, SEAGER & TUFTE, LLC
1221 NICOLLET AVENUE
SUITE 800
MINNEAPOLIS, MN 55403-2420

Mail Date: 04/21/2010

Applicant	: Eduardo Chi Sing	: DECISION ON REQUEST FOR
Patent Number	: 7618567	: RECALCULATION of PATENT
Issue Date	: 11/17/2009	: TERM ADJUSTMENT IN VIEW
Appliction No	: 10/978,321	: OF WYETH AND NOTICE OF INTENT TO
Filed	: 10/29/2004	: ISSUE CERTIFICATE OF CORRECTION
		:

The Request for Recalculation is **GRANTED** to the extent indicated.

The patent term adjustment has been determined to be **1344** days. The USPTO will *sua sponte* issue a certificate of correction reflecting the amount of PTA days determined by the recalculation.

Prior to the issuance of the certificate of correction, the USPTO will afford patentee an opportunity to be heard and request reconsideration. Accordingly, patentee has **one month or thirty (30) days**, whichever is longer, to file a request for reconsideration of this patent term adjustment calculation. See 35 U.S.C. 154(b)(3)(B)(ii) and 37 CFR 1.322(a)(4). No extensions of time will be granted under 37 CFR 1.136.

Patentee should use document code PET.OP if electronically filing a request for reconsideration of this patent term adjustment calculation. The patentee must also include the information required by 37 CFR 1.705(b)(2) and the fee required by 37 CFR 1.18(e). If patentee does not file a timely request for reconsideration of this patent term adjustment calculation including the information required by 37 CFR 1.705(b)(2) and the fee required by 37 CFR 1.18(e), the USPTO will issue a certificate of correction reflecting the PTA determination noted above.

Patentee should be aware that in order to preserve the right to review in the United States District Court for the District of Columbia of the USPTO patent term adjustment determination, patentee must ensure that he or she also take the steps required under 35 U.S.C. 154(b)(4)(A) in a timely manner. Nothing in the request for recalculation should be construed as providing an alternative time frame for commencing a civil action under 35 U.S.C. 154(b)(4)(A).

Any questions concerning this decision should be directed to the Office of Patent Legal Administration at 571-272-7702.

UNITED STATES PATENT AND TRADEMARK OFFICE

Commissioner for Patents
United States Patent and Trademark Office
P.O. Box 1450
Alexandria, VA 22313-1450
www.uspto.gov

SUGHRUE MION, PLLC
2100 PENNSYLVANIA AVENUE, N.W.
SUITE 800
WASHINGTON DC 20037

COPY MAILED
OCT 28 2008
OFFICE OF PETITIONS

In re Application of	:	
Emmanuel Petttfrere et al.	:	
Application No. 10/978,335	:	DECISION ON PETITION
Filed: November 2, 2004	:	
Attorney Docket No. Q84482	:	

This is a decision on the petition under the unintentional provisions of 37 CFR 1.137(b), filed July 28, 2008, to revive the above-identified application.

The petition is **GRANTED**.

The application became abandoned for failure to reply in a timely manner to the Restriction Requirement, mailed October 31, 2007 , which set a shortened statutory period for reply of one (1) month or thirty (30) days (whichever is later). No extensions of time under the provisions of 37 CFR 1.136(a) were obtained. Accordingly, the application became abandoned on December 1, 2007.

The petition satisfies the requirements of 37 CFR 1.137(b) in that petitioner has supplied (1) the reply in the form of an Election, (2) the petition fee of $1540, and (3) a proper statement of unintentional delay.

Telephone inquiries concerning this decision should be directed to JoAnne Burke at (571) 272-4584.

This application is being referred to Technology Center AU 1791 for appropriate action by the Examiner in the normal course of business on the reply received.

Ramesh Krishnamurthy

Ramesh Krishnamurthy
Petitions Examiner
Office of Petitions

UNITED STATES PATENT AND TRADEMARK OFFICE

Commissioner for Patents
United States Patent and Trademark Office
P.O. Box 1450
Alexandria, VA 22313-1450
www.uspto.gov

LEE & HAYES, PLLC
601 W. RIVERSIDE AVENUE
SUITE 1400
SPOKANE WA 99201

COPY MAILED
JAN 16 2009

In re Application of Terry C. Brown et al Application No. 10/978,344 Filed: November 1, 2004 Attorney Docket No. META004US0	: : : : :	DECISION ON PETITION

This is a decision on the petition under the unintentional provisions of 37 CFR 1.137(b), filed December 2, 2008, to revive the above-identified application.

The petition is **GRANTED**.

The petition satisfies the conditions for revival pursuant to the provisions of 37 CFR 1.137(b) in that (1) the reply in the form of the issue and publication fees; (2) the petition fee; and (3) the required statement of unintentional delay have been received. Accordingly, the reply to the Notice of Allowance mailed August 6, 2008, is accepted as having been unintentionally delayed.

Telephone inquiries concerning this decision should be directed to the undersigned at (571) 272-3208.

This application is being referred to the Office of Data Management to be processed into a patent.

Karen Creasy

Karen Creasy
Petitions Examiner
Office of Petitions

UNITED STATES PATENT AND TRADEMARK OFFICE

Commissioner for Patents
United States Patent and Trademark Office
P.O. Box 1450
Alexandria, VA 22313-1450
www.uspto.gov

DENNISON, SCHULTZ & MacDONALD
1727 KING STREET
SUITE105
ALEXANDRIA, VA 22314

COPY MAILED

SEP 18 2006

OFFICE OF PETITIONS

In re Application of	:	
Alba Maria Mendoza Giraldo	:	
Application No. 10/978,359	:	DECISION ON PETITION
Filed: November 2, 2004	:	
Attorney Docket No. 04201	:	

This is a decision on the petition under the unintentional provisions of 37 CFR 1.137(b), filed May 30, 2006, to revive the above-identified application.

The petition is **GRANTED**.

This application became abandoned for failure to timely pay the issue and publication fees on or before May 9, 2006, as required by the Notice of Allowance and Fee(s) Due, mailed February 9, 2006. Accordingly, the date of abandonment of this application is February 10, 2006.

The petition satisfies the requirements of 37 CFR 1.137(b) in that petitioner has supplied (1) the reply in the form of payment of the issue fee of $700 and the publication fee of $300, (2) the petition fee of $750; and (3) a proper statement of unintentional delay. Accordingly, the submission of the issue and publication fees is accepted as having been unintentionally delayed.

Telephone inquiries concerning this decision should be directed to the undersigned at (571) 282-3218.

This application is being referred to Publishing Division for processing into a patent.

Frances Hicks
Petitions Examiner
Office of Petitions

UNITED STATES PATENT AND TRADEMARK OFFICE

COMMISSIONER FOR PATENTS
UNITED STATES PATENT AND TRADEMARK OFFICE
P.O. BOX 1450
ALEXANDRIA, VA 22313-1450
www.uspto.gov

MAILED

APR 16 2005

DIRECTOR'S OFFICE
TECHNOLOGY CENTER 2600

STERNE, KESSLER, GOLDSTEIN & FOX PLLC
1100 NEW YORK AVENUE, N.W.
WASHINGTON DC 20005

In re Application of :
DEHMESHKI, JAMSHID :
Application No. 10/978,369 :
Filed: November 2, 2004 :
For: **USER INTERFACE FOR COMPUTED TOMOGRAPHY (CT) SCAN ANALYSIS** :

DECISION ON PETITION TO MAKE SPECIAL

This is a decision on the petition filed March 4, 2005 under Manual of Patent Examination Procedure §708.02, VIII requesting accelerated examination.

The petition under Manual of Patent Examination Procedure §708.02, VIII, must:
(1) be filed prior to receiving any examination by the examiner,
(2) be accompanied by the required fee- $130,
(3) the claims should be directed to a single invention (if it is determined that the claims pertain to more than one invention, then applicant will have to make an election without traverse or forfeit accelerated examination status),
(4) state that a pre-examination search was made, and fully discuss the search method employed, such as classes and subclasses searched, publications, Chemical abstracts, patents, etc. A search made by a foreign patent office satisfies this requirement,
(5) be accompanied by a copy of each of the references most closely related to the subject matter encompassed by the claims if said references are not already of record,
(6) fully discuss the references, pointing out with the particularity required by 37 C.F.R. §1.111 (b) and (c), how the claimed subject matter is patentable over the references.

The petitioner meets all the above-listed requirements. Accordingly, the petition is **GRANTED**.

The application will retain its special status throughout its entire prosecution, including any appeal to the Board of Patent Appeals and Interferences, subject only to diligent prosecution by the applicant. The application file is being forwarded to the examiner for appropriate action in due course.

Kenneth A. Wieder
Special Program Examiner
Technology Center 2600
Communications

UNITED STATES PATENT AND TRADEMARK OFFICE

COMMISSIONER FOR PATENTS
UNITED STATES PATENT AND TRADEMARK OFFICE
P.O. BOX 1450
ALEXANDRIA, VA 22313-1450
www.uspto.gov

STERNE, KESSLER, GOLDSTEIN & FOX PLLC
1100 NEW YORK AVENUE, N.W.
WASHINGTON, DC 20005

COPY MAILED
DEC 19 2005
OFFICE OF PETITIONS

In re Application of
Jamshid Dehmeshki
Application No. 10/978,369
Filed: November 2, 2004
Attorney Docket No.: 1487.0560000

ON PETITION

This is a decision on the petition, filed December 16, 2005, under 37 CFR 1.313(c)(2) to withdraw the above-identified application from issue after payment of the issue fee.

The petition is **GRANTED**.

The above-identified application is withdrawn from issue for consideration of a submission under 37 CFR 1.114 (request for continued examination). See 37 CFR 1.313(c)(2).

Petitioner is advised that the issue fee paid on December 5, 2005, in the above-identified application, cannot be refunded. If, however, the above-identified application is again allowed, petitioner may request that it be applied towards the issue fee required by the new Notice of Allowance. [1]

Telephone inquiries relating to this decision should be directed to the undersigned at (571) 272-3204.

The application is being referred to Technology Center AU 2625 for further processing of the request for continued examination under 37 CFR 1.114.

Sherry D. Brinkley
Petitions Examiner
Office of Petitions

[1]The request to apply the issue fee to the new Notice may be satisfied by completing and returning the new Issue Fee Transmittal Form PTOL-85(b), which includes the following language thereon: " Commissioner for Patents is requested to apply the Issue Fee and Publication Fee (if any) or re-apply any previously paid issue fee to the application identified above." Petitioner is advised that, whether a fee is indicated as being due or not, the Issue Fee Transmittal Form **must** be completed and timely submitted to avoid abandonment. Note the language in bold text on the first page of the Notice of Allowance and Fee(s) Due (PTOL-85).

UNITED STATES PATENT AND TRADEMARK OFFICE

Commissioner for Patents
United States Patent and Trademark Office
P.O. Box 1450
Alexandria, VA 22313-1450
www.uspto.gov

STERNE, KESSLER, GOLDSTEIN & FOX PLLC
1100 NEW YORK AVENUE, NW
WASHINGTON, DC 20005

MAILED
06 JUN 2006

In re Application of

Serial No.: 10/978,369
Filed: NOVEMBER 2, 2004
For: USER INTERFACE FOR COMPUTED TOMOGRAPHY (CT) SCAN ANALYSIS

DECISION ON PETITION
ACCEPTANCE OF COLOR DRAWINGS

This is a decision on the petition pursuant to 37 C.F.R. § 1.84(a)(2), filed February 15, 2006, requesting acceptance of color drawings.

The petition requests that the color drawings/photographs, noted as Figures 3, 5, and 8 be accepted in lieu of black and white drawings.

A grantable petition under 37 C.F.R. §1.84(a)(2) must be accompanied by a fee set forth under 37 C.F.R. § 1.17(h), 3 (three) set of the color drawings in question, and the specification must contain, or be amended to contain, the following language as the first paragraph in that portion of the specification relating to the brief description of the drawings:

"The file of this patent contains at least one drawing executed in color. Copies of this patent with color drawing(s) will be provided by the Patent and Trademark Office upon request and payment of the necessary fee."

A review of the file record reveals that applicant has provided three sets of color drawings, filed simultaneously with the subject petition and the required amendment to the specification.

Petitioner has satisfied the requirements of 37 C.F.R. §1.84(a)(2). Accordingly, the petition is **GRANTED**.

The application file will be forwarded to the examiner for action in appropriate turn.

Kenneth A. Wieder
Special Program Examiner
Technology Center 2600
Communications

UNITED STATES PATENT AND TRADEMARK OFFICE

UNITED STATES DEPARTMENT OF COMMERCE
United States Patent and Trademark Office
Address: COMMISSIONER FOR PATENTS
P.O. Box 1450
Alexandria, Virginia 22313-1450
www.uspto.gov

STANZIONE & KIM, LLP
919 18TH STREET, N.W.
SUITE 440
WASHINGTON, DC 20006

Mail Date: 05/21/2010

Applicant	: Eun-young Kang	: DECISION ON REQUEST FOR
Patent Number	: 7639310	: RECALCULATION of PATENT
Issue Date	: 12/29/2009	: TERM ADJUSTMENT IN VIEW
Application No	: 10/978,371	: OF WYETH AND NOTICE OF INTENT TO
Filed	: 11/02/2004	: ISSUE CERTIFICATE OF CORRECTION
		:

The Request for Recalculation is **GRANTED** to the extent indicated.

The patent term adjustment has been determined to be **1056** days. The USPTO will *sua sponte* issue a certificate of correction reflecting the amount of PTA days determined by the recalculation.

Prior to the issuance of the certificate of correction, the USPTO will afford patentee an opportunity to be heard and request reconsideration. Accordingly, patentee has **one month or thirty (30) days**, whichever is longer, to file a request for reconsideration of this patent term adjustment calculation. See 35 U.S.C. 154(b)(3)(B)(ii) and 37 CFR 1.322(a)(4). No extensions of time will be granted under 37 CFR 1.136.

Patentee should use document code PET.OP if electronically filing a request for reconsideration of this patent term adjustment calculation. The patentee must also include the information required by 37 CFR 1.705(b)(2) and the fee required by 37 CFR 1.18(e). If patentee does not file a timely request for reconsideration of this patent term adjustment calculation including the information required by 37 CFR 1.705(b)(2) and the fee required by 37 CFR 1.18(e), the USPTO will issue a certificate of correction reflecting the PTA determination noted above.

Patentee should be aware that in order to preserve the right to review in the United States District Court for the District of Columbia of the USPTO patent term adjustment determination, patentee must ensure that he or she also take the steps required under 35 U.S.C. 154(b)(4)(A) in a timely manner. Nothing in the request for recalculation should be construed as providing an alternative time frame for commencing a civil action under 35 U.S.C. 154(b)(4)(A).

Any questions concerning this decision should be directed to the Office of Patent Legal Administration at 571-272-7702.

UNITED STATES PATENT AND TRADEMARK OFFICE

Commissioner for Patents
United States Patent and Trademark Office
P.O. Box 1450
Alexandria, VA 22313-1450
www.uspto.gov

Babak Akhlaghi
McDermott Will & Emery
600 Thirteenth Street, N.W.
Washington, D.C. 20005-3096

COPY MAILED

APR 22 2008

OFFICE OF PETITIONS

In re Application of	:	
Shunpei Yamazaki et al.	:	
Application No. 10/978,382	:	DECISION ON PETITION
Filed: November 2, 2004	:	TO WITHDRAW
Attorney Docket No. 07977-185004	:	FROM RECORD
	:	

This is a decision on the Request to Withdraw as attorney or agent of record under 37 C.F.R. § 1.36(b), filed November 14, 2007.

The request is **APPROVED**.

A grantable request to withdraw as attorney/agent of record must be signed by every attorney/agent seeking to withdraw or contain a clear indication that one attorney is signing on behalf of another/others. A request to withdraw will not be approved unless at least 30 (thirty) days would remain between the date of approval and the later of the expiration date of a time to file a response or the expiration date of the maximum time period which can be extended under 37 C.F.R. § 1.136(a).

The request was signed by Babak Akhlaghi. Babak Akhlaghi has been withdrawn as attorney or agent of record; all other attorneys remain of record. The correspondence address of record remains unchanged.

Telephone inquiries concerning this decision should be directed to Terri Williams at 571-272-2991.

Terri Williams

Terri Williams
Petitions Examiner
Office of Petitions

cc: **Fish & Richardson P.C.**
P.O. Box 1022
Minneapolis, MN 55440-1022

UNITED STATES PATENT AND TRADEMARK OFFICE

Commissioner for Patents
United States Patent and Trademark Office
P.O. Box 1450
Alexandria, VA 22313-1450
www.uspto.gov

Pillsbury Winthrop Shaw Pittman LLP
1650 Tysons Boulevard
McLean, VA 22102

COPY MAILED

JUL 28 2006

OFFICE OF PETITIONS

In re Application of	:	
Ian SWANSON et al.	:	
Application No. 10/978,394	:	DECISION ON PETITION
Filed: November 2, 2004	:	TO WITHDRAW
Attorney Docket No. ADE-101	:	FROM RECORD
	:	

This is a decision on the Request to Withdraw as attorney or agent of record under 37 C.F.R. § 1.36(b), filed November 10, 2005.

The request is **NOT APPROVED**.

A grantable request to withdraw as attorney/agent of record must be signed by every attorney/agent seeking to withdraw or contain a clear indication that one attorney is signing on behalf of another/others. A request to withdraw will not be approved unless at least 30 (thirty) days would remain between the date of approval and the later of the expiration date of a time to file a response or the expiration date of the maximum time period which can be extended under 37 C.F.R. § 1.136(a).

The request cannot be approved because no reasons for withdrawal have been provided. The Office cannot, at this time, determine whether practitioner's request is one of the mandatory or permissive reasons enumerated in 37 CFR 10.40. Any subsequent requests must include reasons for withdrawal. Please note that there is a space provided for on PTO/SB/83 (Request to Withdraw as Attorney or Agent) to supply practitioner's reasons.

All future communications from the Office will continue to be directed to the above-listed address until otherwise notified by applicant.

Telephone inquiries concerning this decision should be directed to Monica Graves at 571-272- 7253.

David Bucci
Petitions Examiner
Office of Petitions

cc: Ian S. Swanson
President & Chief Executive Officer
HealthBanQ, Inc.
129 Lords Highway
Weston, CT 06883-1751

UNITED STATES PATENT AND TRADEMARK OFFICE

Commissioner for Patents
United States Patent and Trademark Office
P.O. Box 1450
Alexandria, VA 22313-1450
www.uspto.gov

COPY MAILED

OCT 16 2006

OFFICE OF PETITIONS

PILLSBURY WINTHROP SHAW PITTMAN LLP
P.O. BOX 10500
MCLEAN VA 22102

In re Application of	:	
SWANSON, et al.	:	
Application No. 10/978,394	:	DECISION ON PETITION
Filed: November 2, 2004	:	TO WITHDRAW
Attorney Docket No. ADE-101	:	FROM RECORD
	:	

This is a decision on the Request to Withdraw as attorney or agent of record under 37 C.F.R. § 1.36(b), filed August 22, 2006.

The request is **APPROVED**.

A grantable request to withdraw as attorney/agent of record must be signed by every attorney/agent seeking to withdraw or contain a clear indication that one attorney is signing on behalf of another/others. A request to withdraw will not be approved unless at least 30 (thirty) days would remain between the date of approval and the later of the expiration date of a time to file a response or the expiration date of the maximum time period which can be extended under 37 C.F.R. § 1.136(a).

The request was signed by Tara Hutchings on behalf of all attorneys of record who are associated with customer No. 28970. All attorneys/agents associated with the Customer Number 28970 have been withdrawn. Applicant is reminded that there is no attorney of record at this time.

All future correspondence will be directed to the first named inventor Ian S. Swanson at the address indicated below.

Telephone inquiries concerning this decision should be directed to Monica A. Graves at 571-272-7253.

David Bucci
Petitions Examiner
Office of Petitions

cc: **Ian S. Swanson**
HealthBanQ, Inc.
129 Lords Highway
Weston, CT 06883-1751

UNITED STATES PATENT AND TRADEMARK OFFICE

UNITED STATES DEPARTMENT OF COMMERCE
United States Patent and Trademark Office
Address: COMMISSIONER FOR PATENTS
P.O. Box 1450
Alexandria, Virginia 22313-1450
www.uspto.gov

APPLICATION NUMBER	FILING OR 371 (c) DATE	FIRST NAMED APPLICANT	ATTY. DOCKET NO./TITLE
10/978,394	11/02/2004	Ian S. Swanson	ADE-101

CONFIRMATION NO. 2313

OC000000020756978

28970
PILLSBURY WINTHROP SHAW PITTMAN LLP
P.O. BOX 10500
MCLEAN, VA 22102

Date Mailed: 10/10/2006

NOTICE REGARDING CHANGE OF POWER OF ATTORNEY

This is in response to the Power of Attorney filed 08/22/2006.

- The withdrawal as attorney in this application has been accepted. Future correspondence will be mailed to the new address of record. 37 CFR 1.33.

MONICA A GRAVES
OP (571) 272-7253

FORMER ATTORNEY/AGENT COPY

UNITED STATES PATENT AND TRADEMARK OFFICE

COMMISSIONER FOR PATENTS
UNITED STATES PATENT AND TRADEMARK OFFICE
P.O. BOX 1450
ALEXANDRIA, VA 22313-1450
www.uspto.gov

BURNS DOANE SWECKER & MATHIS LLP
PO BOX 1404
ALEXANDRIA, VA 22313-1404

COPY MAILED

OCT 0 3 2005

OFFICE OF PETITIONS

In re Application of	:	
Yann Chaylard	:	
Application No. 10/978,414	:	
Filed: November 2, 2004	:	ON PETITION
Attorney Docket No.	:	
033818-131	:	

This is a decision on the petition under 37 CFR 1.78(a)(3), filed August 18, 2005, to accept an unintentionally delayed claim under 35 U.S.C. §§ 120 and 365(c) for the benefit of priority to prior-filed PCT Application No. PCT/EP03/04873, filed May 9, 2003, set forth in the amendment submitted concurrently with the instant petition.

The petition is **GRANTED**.

A petition for acceptance of a claim for late priority under 37 CFR 1.78(a)(3) is only applicable to those applications filed on or after November 29, 2000. Further, the petition is appropriate only after the expiration of the period specified in 37 CFR 1.78(a)(2)(ii). In addition, the petition under 37 CFR 1.78(a)(3) must be accompanied by:

(1) the reference required by 35 U.S.C. § 120 and 37 CFR 1.78(a)(2)(i) of the prior-filed application, unless previously submitted;
(2) the surcharge set forth in § 1.17(t); and
(3) a statement that the entire delay between the date the claim was due under 37 CFR 1.78(a)(2)(ii) and the date the claim was filed was unintentional. The Commissioner may require additional information where there is a question whether the delay was unintentional.

The instant nonprovisional application was filed after November 29, 2000, and the claim herein for the benefit of priority to the above-noted, prior-filed PCT application is submitted after

expiration of the period specified in 37 CFR 1.78(a)(2)(ii). Therefore, this is a proper petition under 37 CFR 1.78(a)(3).

The petition complies with the requirements for a grantable petition under 37 CFR 1.78(a)(3) in that (1) a reference to the above-noted, prior-filed nonprovisional applications has been included in an amendment to the first sentence of the specification following the title, as provided by 37 CFR 1.78(a)(2)(iii); (2) the surcharge fee required by 37 CFR 1.17(t) has been submitted; and (3) the petition contains a proper statement of unintentional delay. Accordingly, having found that the instant petition for acceptance of an unintentionally delayed claim for the benefit of priority under 35 U.S.C. §§ 120 and 365(c) to the above-noted, prior-filed PCT application satisfies the conditions of 37 CFR 1.78(a)(3), the petition is granted.

The granting of the petition to accept the delayed benefit claim to the prior-filed application under 37 CFR 1.78(a)(3) should not be construed as meaning that the instant application is entitled to the benefit of the prior-filed application. In order for the instant application to be entitled to the benefit of the prior-filed application, all other requirements under 35 U.S.C. §§ 120 and 365(c) and 37 CFR 1.78(a)(1) and (a)(2) must be met. Similarly, the fact that the corrected Filing Receipt accompanying this decision on petition includes the prior-filed application should not be construed as meaning that applicant is entitled to the claim for benefit of priority to the prior-filed application noted thereon. Accordingly, the examiner will, in due course, consider this benefit claim and determine whether the instant application is entitled to the benefit of the earlier filing date.

A corrected Filing Receipt, which includes the priority claim to the prior-filed application, accompanies this decision on petition.

Any inquiries concerning this decision may be directed to Attorney Derek L. Woods at (571) 272-3232. All other inquiries concerning either the examination procedures or status of the application should be directed to the Technology Center.

This application is being forwarded to the examiner of Technology Center Art Unit 1733 for appropriate action on the amendment filed August 18, 2005, including consideration of applicant's entitlement to claim benefit of priority under 35

U.S.C. §§ 120 and 365(c) to the above-noted, prior-filed PCT application.

Frances Hicks

Frances Hicks
Lead Paralegal
Office of Petitions
Office of the Deputy Commissioner
for Patent Examination Policy

ATTACHMENT: Corrected Filing Receipt

UNITED STATES PATENT AND TRADEMARK OFFICE

Commissioner for Patents
United States Patent and Trademark Office
P.O. Box 1450
Alexandria, VA 22313-1450
www.uspto.gov

FITZPATRICK CELLA HARPER & SCINTO
30 ROCKEFELLER PLAZA
NEW YORK NY 10112-3801

MAIL

MAR 5 - 2007

DIRECTOR OFFICE
TECHNOLOGY CENTER 2600

In re Application of	:	
KIJI NAKAGIRI	:	DECISION ON REQUEST TO
Application No. 10/978415	:	PARTICIPATE IN PATENT
Filed: November 2, 2004	:	PROSECUTION HIGHWAY
Attorney Docket No. 00862.102784	:	PILOT PROGRAM AND PETITION
	:	TO MAKE SPECIAL UNDER
	:	37 CFR 1.102(d)

This is a decision on the request to participate in the Patent Prosecution Highway (PPH) pilot program and the petition under 37 CFR 1.102(d), filed February 12, 2007, to make the above-identified application special.

The request and petition are **DISMISSED**.

A grantable request to participate in the PPH pilot program and petition to make special require:

(1) The U.S. application must validly claim priority under 35 U.S.C. 119(a) to one or more applications filed in the JPO;
(2) Applicant must submit a copy of the allowable/patentable claim(s) from the JPO application(s) along with an English translation thereof and a statement that the English translation is accurate;
(3) All the claims in the U.S. application must sufficiently correspond or be amended to sufficiently correspond to the allowable/patentable claim(s) in the JPO application(s);
(4) Examination of the U.S. application has not begun;
(5) Applicant must submit a copy of all the office actions from each of the JPO application(s) containing the allowable/patentable claim(s) along with an English translation thereof and a statement that the English translation is accurate;
(6) Applicant must submit an IDS listing the documents cited by the JPO examiner in the JPO office action along with copies of documents except U.S. patents or U.S. patent application publications; and
(7) The required petition fee under 37 CFR 1.17(h).

The request to participate in the PPH pilot program and petition fail to include:

Item 3 above.

Specifically, the JPO allowed claim 1 recites "having a hierarchical structure" at line 5 whereas the US application claim 1 as amended (10/6/06) recites "a structure" at line 5.

The JPO allowed claim 4 recites "an odd-numbered page" at line 4 whereas the US application claim 4 as amended (10/6/06) recites "an odd page" at line 3.

The above are the 2 examples that the claims in the U.S. application are not sufficiently correspond or be amended to sufficiently correspond to the allowable/patentable claim(s) in the JPO application(s). To meet this requirement, applicant is reminded to thoroughly review all claims between the JPO allowed claims and the US application claims.

Applicant is given a time period of **ONE MONTH or THIRTY DAYS**, whichever is longer, from the mailing date of this decision to correct the deficiencies. **NO EXTENSION OF TIME UNDER 37 CFR 1.136 IS PERMITTED.** If the deficiencies are not corrected with the time period given, the application will await action in its regular turn.

Response must be faxed to John Peng at 571-273-7272 (RightFax) or 571-273-0308.

Telephone inquiries concerning this decision should be directed to John Peng at 571-272-7272.

All other inquiries concerning the examination or status of the application should be directed to Patent Application Information Retrieval (PAIR) system.

John Peng
TC 2600
Quality Assurance Specialist

UNITED STATES PATENT AND TRADEMARK OFFICE

Commissioner for Patents
United States Patent and Trademark Office
P.O. Box 1450
Alexandria, VA 22313-1450
www.uspto.gov

FITZPATRICK CELLA HARPER & SCINTO
30 ROCKEFELLER PLAZA
NEW YORK NY 10112-3801

MAIL

APR 11 2007

DIRECTOR'S OFFICE
TECHNOLOGY CENTER 2600

In re Application of	:	
KOJI NAKAGIRI	:	DECISION ON REQUEST TO
Application No. 10/978415	:	PARTICIPATE IN PATENT
Filed: November 2, 2004	:	PROSECUTION HIGHWAY
Attorney Docket No. 00862.102784	:	PILOT PROGRAM AND PETITION
	:	TO MAKE SPECIAL UNDER
	:	37 CFR 1.102(d)

This is a decision on the request to participate in the Patent Prosecution Highway (PPH) pilot program and the petition under 37 CFR 1.102(d), filed April 5, 2007, to make the above-identified application special.

The request and petition are **GRANTED**.

A grantable request to participate in the PPH pilot program and petition to make special require:

(1) The U.S. application must validly claim priority under 35 U.S.C. 119(a) to one or more applications filed in the JPO;
(2) Applicant must submit a copy of the allowable/patentable claim(s) from the JPO application(s) along with an English translation thereof and a statement that the English translation is accurate;
(3) All the claims in the U.S. application must sufficiently correspond or be amended to sufficiently correspond to the allowable/patentable claim(s) in the JPO application(s);
(4) Examination of the U.S. application has not begun;
(5) Applicant must submit a copy of all the office actions from each of the JPO application(s) containing the allowable/patentable claim(s) along with an English translation thereof and a statement that the English translation is accurate;
(6) Applicant must submit an IDS listing the documents cited by the JPO examiner in the JPO office action along with copies of documents except U.S. patents or U.S. patent application publications; and
(7) The required petition fee under 37 CFR 1.17(h).

The request to participate in the PPH pilot program and petition comply with the above requirements. Accordingly, the above-identified application has been accorded "special" status.

Telephone inquiries concerning this decision should be directed to John Peng at 571-272-7272.

All other inquiries concerning the examination or status of the application should be directed to Patent Application Information Retrieval (PAIR) system.

The application is being forwarded to the examiner for action on the merits commensurate with this decision.

John Peng
TC 2600
Quality Assurance Specialist

UNITED STATES PATENT AND TRADEMARK OFFICE

Commissioner for Patents
United States Patent and Trademark Office
P.O. Box 1450
Alexandria, VA 22313-1450
www.uspto.gov

KRATZ, QUINTOS & HANSON, LLP
1420 K STREET, N.W.
SUITE 400
WASHINGTON, DC 20005

MAILED

JUL 14 2009

OFFICE OF PETITIONS

In re Patent No. 7,450,977	:	
Issue Date: November 11, 2008	:	
Application No. 10/978,416	:	ON PETITION
Filed: November 2, 2004	:	
Attorney Docket No. 040023	:	

This is a decision on the petition filed December 18, 2008, which is being treated as a request under 37 CFR 3.81(b)[1] to correct the name of the assignee on the front page of the above-identified patent by way of a Certificate of Correction.

The request is **GRANTED**.

Telephone inquiries concerning this decision may be directed to the April M. Wise at (571) 272-1642. Inquiries regarding the issuance of a certificate of correction should be directed to the Certificate of Correction Branch at (571) 272-4200.

The Certificates of Correction Branch will be notified of this decision granting the petition under 37 CFR 3.81(b) and directing issuance of the requested Certificate of Correction.

/Carl Friedman/
Carl Friedman
Petitions Examiner
Office of Petitions

[1] *See* MPEP 1309, subsection II; and Official Gazette of June 22, 2004.

UNITED STATES PATENT AND TRADEMARK OFFICE

Commissioner for Patents
United States Patent and Trademark Office
P.O. Box 1450
Alexandria, VA 22313-1450
www.uspto.gov
OIW 01-05

STAAS & HALSEY LLP
SUITE 700
1201 NEW YORK AVENUE, N.W.
WASHINGTON DC 20005

COPY MAILED

JAN 19 2005

OFFICE OF PETITIONS

In re Application of	:	
Hiroki Amemiya	:	
Application No. 10/978,483	:	ON PETITION
Filed: 2 November, 2004	:	
Attorney's Docket No. 1419.1099	:	

This is a decision on the petition filed on 22 December, 2004, requesting that the above-identified application be accorded a filing date of 2 November, 2004, with Figure 7 described in the specification as a part of the original disclosure.

The petition is granted.

The application was filed on 2 November, 2004.

Accordingly, on 13 December, 2004, Initial Patent Examination Division mailed a Notice of Omitted Item(s) in a Nonprovisional Application, stating that the application had been accorded a filing date of 2 November, 2004, but that Figure 7 described in the specification appeared to have been omitted.

In response, on 22 December, 2004, the present petition and a copy of, *inter alia*, one (1) sheet of drawings containing Figure 7 described in the specification were filed. Petitioners argue that the sheet of drawings containing Figure 7 was filed with the other application papers on 2 November, 2004, but was subsequently misplaced in the U.S. Patent and Trademark Office (Office). In support, a copy of petitioner's postcard receipt was supplied with the present petition. The postcard receipt shows an Office date stamp of 2 November, 2004, and identifies

the application by the inventor's name, invention title, and attorney docket number, and acknowledges receipt of, *inter alia*, "Drawings 9 sheets". Petitioner requests that the application, including one (1) sheet of drawings containing Figure 7 described in the specification, be accorded a filing date of 2 November, 2004.

A review of the record reveals that no sheet of drawings containing Figure 7 described in the specification has been located among the application papers received on 2 November, 2004. However, the evidence is convincing that the application papers deposited on 2 November, 2004, included nine (9) sheets of formal drawings, one of which included Figure 7 described in the specification, which was subsequently misplaced in the Office. Therefore, the application, including one (1) sheet of drawings containing Figure 7 described in the specification, is entitled to a filing date of 2 November, 2004.

The "Notice" mailed on 13 December, 2004, is vacated.

In view of the above, the petition is granted. The $130.00 in petition fee paid with the present petition is unnecessary and will be refunded to counsel's deposit account, No. 19-3935.

The application will be processed with the copy of one (1) sheet of drawings containing Figure 7 filed on 22 December, 2004, as a part of the original disclosure. The copy of the other application papers supplied with the present petition will not be used for processing or examination, but will be retained in the application file.

The application is being referred to Initial Patent Examination Division for further processing with a filing date of 2 November, 2004, using the application papers filed on that date, and the sheet of drawings containing Figure 7 supplied with the present petition.

Telephone inquires should be directed to the undersigned at 571-272-3231.

D Wood

Douglas I. Wood
Senior Petitions Attorney
Office of Petitions

UNITED STATES PATENT AND TRADEMARK OFFICE

Commissioner for Patents
United States Patent and Trademark Office
P.O. Box 1450
Alexandria, VA 22313-1450
www.uspto.gov

WESTERMAN, HATTORI, DANIELS & ADRIAN, LLP
1250 CONNECTICUT AVENUE, NW
SUITE 700
WASHINGTON, DC 20036

COPY MAILED

MAY 2 2 2007

OFFICE OF PETITIONS

In re Patent No. 7,127,900	:	
Issue Date : October 31, 2006	:	
Application No. 10/978,488	:	DECISION ON PETITION
Filed: November 2, 2004	:	
Patentee(s): Kenji Yoshimura, et. al.	:	

This is a decision on the Request for Certificate of Correction, filed on April 12, 2007, which is being treated as a request under 37 CFR 3.81(b)[1], to correct the name of the assignee on the front page of the above-identified patent by way of a Certificate of Correction.

The petition is **DISMISSED**.

Petitioner requests issuance of a Certificate of Correction in the name of "Fukuoka Prefectural Government." 37 CFR 3.81(b) permits the patent to issue in the name of an assignee if the assignment was submitted after payment of the issue fee but ***prior to issuance of a patent***.

U.S. Patent and Trademark Office assignment records at reel/frame number 018917/0366 confirm that a corrected assignment coversheet from joint inventors Kenji Yoshimura and Hiromi Yamamoto to Fukuoka Prefectural Government, was recorded on February 20, 2007. However, a review of the details of the corrected assignment coversheet lists "Fukuoka Prefectural Government of" as the assignee of record, which is consistent with the original assignment recorded on November 2, 2004 at reel/frame number 015951/0929. Since the details of the corrected assignment recorded on February 20, 2007, fails to show that an error in the assignee's name occurred, prior to issuance of the above patent, a Certificate of Correction would not be proper.

This application file is being referred to Files Repository.

Inquiries concerning this decision should be directed to the undersigned at (571) 272-3226.

Andrea Smith
Petitions Examiner
Office of Petitions

[1] *See* Official Gazette of June 22, 2004

UNITED STATES PATENT AND TRADEMARK OFFICE

Commissioner for Patents
United States Patent and Trademark Office
P.O. Box 1450
Alexandria, VA 22313-1450
www.uspto.gov

BASF CORPORATION
PATENT DEPARTMENT
1609 BIDDLE AVENUE
MAIN BLDG.
WYANDOTTE, MI 48192

COPY MAILED
SEP 12 2008

In re Application of	:	
Odajima et al.	:	
Application No.: 10/978495	:	ON PETITION
Filing or 371(c) Date: 11/01/2004	:	
Attorney Docket Number:	:	
IN-5788	:	

This is a decision on the Petition for Revival of an Application for Patent Abandoned Unintentionally Under 37 C.F.R. § 1.137(b), filed July 11, 2008

This Petition is hereby **granted**.

The above-identified application became abandoned for failure to timely reply to the non-final Office action, mailed November 16, 2007. The Office action set a three (3) period for reply. Extensions of time under 37 CFR 1.136(a) were available. No reply having been received, the application became abandoned on February 17, 2008. The mailing of this decision precedes the mailing of a Notice of Abandonment.

Applicant files the present petition and includes an Amendment in response to the Office action. The petition satisfies the conditions for revival pursuant to the provisions of 37 CFR 1.137(b) in that (1) the reply in the form of an Amendment is filed with the present petition; (2) the petition fee; and (3) the required statement of unintentional delay. Accordingly, the reply is accepted as having been unintentionally delayed.

The application file does not indicate a change of address has been filed in this case, although the address given on the petition differs from the address of record. A change of address should be filed in this case in accordance with MPEP 601.03. A courtesy copy of this decision is being mailed to the address noted on the petition. However, until otherwise instructed, all future correspondence regarding this application will be mailed solely to the address of record.

This application is being referred to Technology Center Art Unit 1796 for processing of the Amendment filed with the petition in due course.

Telephone inquiries concerning this decision should be directed to the undersigned at (571) 272-3232.

/Derek L. Woods/
Derek L. Woods
Attorney
Office of Petitions

CC: Harness, Dickey and Pierce, P.L.C.
5445 Corporate Drive
Troy MI 48098

UNITED STATES PATENT AND TRADEMARK OFFICE

Commissioner for Patents
United States Patent and Trademark Office
P.O. Box 1450
Alexandria, VA 22313-1450
www.uspto.gov

Date : May 22, 2007

Patent No. : 7174256 B2
Inventor(s) : Brockhaus, et al.
Issued : Feb. 6, 2007
Title : **MAGNETOINDUCTIVE FLOWMETER AND MEASURING METHOD FOR A MAGNETOINDUCTIVE FLOWMETER**
Docket No. :

Re: Request for Certificate of Correction

Consideration has been given your request for the issuance of a certificate of correction for the above-identified patent under the provisions of 37 CFR 1.322 and/or 1.323.

Assignees' names and addresses (assignment data) printed in a patent are based *solely* on information supplied in the appropriate space for identifying the assignment data, i.e., item 3 of the Fee(s) Transmittal Form PTOL-85B. After payment of the issue fee, correction of assignment data submitted on the PTOL-85B can only be done by Certificate of Correction under 37 CFR 1.323, with a request under 37 CFR 3.81(b).

A request for a patent to be corrected to state the name of the assignee must:

A. state that the assignment was submitted for recordation as set forth in 37 CFR 3.11 before issuance of the patent;
B. include a request for a certificate of correction under 37 CFR 1.323 along with the fee set forth in 37 CFR 1.20(a); and
C. include the processing fee set forth in 37 CFR 1.17(i).

If the request is granted, Certificates of Correction Branch will be notified that a Certificate of Correction may be issued.

See Manual of Patent Examining Procedure, Section 1481.01 (Rev. 3) (Oct. 2005).

Applicant has not included items A and or C above, accordingly, the request for Certificate of Correction to add or change the assignee data is denied.

Any request under 37 CFR 3.81(b) should be directed to the following address or facsimile number:

By mail: Mail Stop PETITIONS

Commissioner for Patents
Post Office Box 1450
Alexandria, VA 22313-1450

By hand: Customer Service Window
Mail Stop Petitions
Randolph Building
401 Dulany Street
Alexandria, VA 22314

By fax: 571-273-8300
ATTN: Office of Petitions

If a fee (currently $100) was previously submitted for consideration of a Request for Certificate of Correction, under CFR 1.323, to correct assignment data, no additional fee is required.

Elisha Evans
For Cecelia Newman
Decisions & Certificates
of Correction Branch
(703) 308-9390 ext. 110

CESARI AND MCKENNA, LLP
88 BLACK FALCON AVENUE
BOSTON MA 02210

CBN/eme

UNITED STATES PATENT AND TRADEMARK OFFICE

Commissioner for Patents
United States Patent and Trademark Office
P.O. Box 1450
Alexandria, VA 22313-1450
www.uspto.gov

COPY MAILED

SEP 25 2007

OFFICE OF PETITIONS

CESARI AND MCKENNA, LLP
88 BLACK FALCON AVENUE
BOSTON, MA 02210

In re Patent No. 7,174,256 :
Issue Date: February 6, 2007 :
Application No. 10/978,496 : ON PETITION
Filed: November 1, 2004 :
Attorney Docket No. 15804-0126 :

This is a decision on the petition filed July 2, 2007, to waive the rules and accept the correction of the assignee on the front page of the above-identified patent.

The petition is **DISMISSED**.

Petitioner requests issuance of a certificate of correction in the name of "Krohne Messtechnik GmbH & Co, KG." 37 CFR 3.81(a) permits the patent to issue to the assignee, provided that, at the time the issue fee is paid, the name of an assignee is provided. 37 CFR 3.81(b) permits the patent to issue in the name of an assignee if the assignment was submitted after payment of the issue fee but ***prior to issuance of a patent***. Patent and Trademark Office assignment records disclose that an assignment from Krohne AG to Krohne Messtechnik GmbH & Co, KG was recorded on March 26, 2007, after the date of issuance of this patent. Accordingly, since the assignment was not submitted for recordation until after issuance of this patent, issuance of a certificate of correction would not be proper. *See* MPEP Section 307.

Telephone inquiries concerning this decision should be directed to the undersigned at (571) 272-3222.

Kenya A. McLaughlin
Petitions Attorney
Office of Petitions

UNITED STATES PATENT AND TRADEMARK OFFICE

Commissioner for Patents
United States Patent and Trademark Office
P.O. Box 1450
Alexandria, VA 22313-1450
www.uspto.gov

MAIL

AUG 1 0 2005

DIRECTOR OFFICE
TECHNOLOGY CENTER 2600

MORRISON & FOERSTER LLP
425 MARKET STREET
SAN FRANCISCO, CA 94105-2482

In re Application of
David Wake
Application No. 10/978,501
Filed: November 1, 2004
For: **COMMUNICATIONS SYSTEM AND METHOD**

DECISION ON REQUEST TO WITHDRAW AS ATTORNEY

This is a decision on the Request to Withdraw as Attorney/Agent of record filed on May 16, 2005.

A grantable request to withdraw as attorney/agent of record must do the following:
(1) indicate the present mailing address of the attorney(s)/agent(s) who seek(s) to withdraw, and
(2) be signed by each attorney/agent seeking to withdraw or clearly be signed on their behalf, and
(3) be *approved* at least thirty (30) days prior to the maximum extendable period for response to any outstanding Office Action, and
(4) indicate the address to which future correspondence should be mailed.

The Request to Withdraw as Attorney is **DISMISSED AS MOOT**.

A Revocation of Attorney was filed on July 8, 2005 and was accepted by the Office on July 25, 2005.

All future communications from the Office will be directed to the address listed below until otherwise notified by applicant. Applicant is reminded of the obligation to promptly notify the Patent and Trademark Office of any change in correspondence address to ensure receipt of all communications from the Office.

Kenneth Wieder
Special Program Examiner
Technology Center 2600
Communications
(571) 272-7288

CC: Burt Magen
Vierra Magen Marcus Harmon & DeNiro LLP
685 Market Street
Suite 540
San Francisco, CA 94105

UNITED STATES PATENT AND TRADEMARK OFFICE

UNITED STATES DEPARTMENT OF COMMERCE
United States Patent and Trademark Office
Address: COMMISSIONER FOR PATENTS
P.O. Box 1450
Alexandria, Virginia 22313-1450
www.uspto.gov

APPLICATION NO.	FILING DATE	FIRST NAMED INVENTOR	ATTORNEY DOCKET NO.	CONFIRMATION NO.
10/978,504	11/01/2004	Gayatri Vyas	GP-305624	2558

7590 03/03/2008

CARY W. BROOKS
General Motors Corporation
Legal Staff, Mail Code 482-C23-B21
P.O. Box 300
Detroit, MI 48265-3000

EXAMINER
ALEJANDRO, RAYMOND

ART UNIT	PAPER NUMBER
1795	

MAIL DATE	DELIVERY MODE
03/03/2008	PAPER

Please find below and/or attached an Office communication concerning this application or proceeding.

The time period for reply, if any, is set in the attached communication.

UNITED STATES PATENT AND TRADEMARK OFFICE

Commissioner for Patents
United States Patent and Trademark Office
P.O. Box 1450
Alexandria, VA 22313-1450
www.uspto.gov

caf

Mailed: 3-3-08

In re application of	:	
Vyas et al	:	DECISION ON
Serial No. 10/978,504	:	PETITION
Filed: November 1, 2004	:	
For: METHOD OF FABRICATING CORROSION-	:	
RESISTANT BIPOLAR PLATE	:	

This is a decision on the PETITION TO THE COMMISSIONER TO EXERCISE SUPERVISORY AUTHORITY AND INSTRUCT THE EXAMINER TO ACCEPT APPELLANTS' APPEAL BRIEF AS FILED submitted October 17, 2007.

DECISION

The Notification of Non-Compliant Appeal Brief mailed July 10, 2007 has been withdrawn and an Examiner's Answer was issued January 22, 2008. Accordingly, the petition to accept the Appeal Brief filed on October 17, 2007 is **MOOT.** The application is being forwarded to the Board of Patent Appeals and Interferences for their consideration.

JMStone

Jacqueline M. Stone, Director
Technology Center 1700
Chemical and Materials Engineering

CARY W. BROOKS
General Motors Corporation
Legal Staff, Mail Code 482-C23-B21
P.O. Box 300
Detroit MI 48265-3000

UNITED STATES PATENT AND TRADEMARK OFFICE

Commissioner for Patents
United States Patent and Trademark Office
P.O. Box 1450
Alexandria, VA 22313-1450
www.uspto.gov

CESARI AND MCKENNA, LLP
88 BLACK FALCON AVENUE
BOSTON, MA 02210

COPY MAILED

AUG 14 2006

OFFICE OF PETITIONS

In re Application of

Brockhaus, et al.

Application No. 10/978,509

Filed: November 1, 2004

Attorney Docket No. 15804-0125

DECISION ON PETITION

This is a decision on the petition under 37 CFR §1.137(b), March 17, 2006, to revive the above-identified application.

The petition is **granted**.

This application became abandoned for failure to timely remit the issue fee of $1400.00 and the publication fee of $300.00 as required by the Notice of Allowance and Issue Fee Due (the "Notice") mailed December 12, 2005. The Notice set forth a three (3) month statutory period for reply. No response was received within the allowable period. Accordingly, this application became abandoned on March 13, 2006.

The issue fee and publication fee were received on March 17, 2006.

Form PTOL-85B, filed March 17, 2006, is noted and made of record.

The application is being directed to the Office of Patent Publications for further processing.

Telephone inquiries concerning this decision may be directed to the undersigned at (571) 272-3222.

Kenya A. McLaughlin
Petitions Attorney
Office of Petitions

UNITED STATES PATENT AND TRADEMARK OFFICE

UNITED STATES DEPARTMENT OF COMMERCE
United States Patent and Trademark Office
Address: COMMISSIONER FOR PATENTS
P.O. Box 1450
Alexandria, Virginia 22313-1450
www.uspto.gov

BROOKS KUSHMAN P.C. /Oracle America/ SUN / STK
1000 TOWN CENTER, TWENTY-SECOND FLOOR
SOUTHFIELD, MI 48075-1238

Mail Date: 04/26/2010

Applicant	: Mark Roth	: DECISION ON REQUEST FOR
Patent Number	: 7610577	: RECALCULATION of PATENT
Issue Date	: 10/27/2009	: TERM ADJUSTMENT IN VIEW
Appliction No	: 10/978,517	: OF WYETH AND NOTICE OF INTENT TO
Filed	: 11/01/2004	: ISSUE CERTIFICATE OF CORRECTION
		:

The Request for Recalculation is **GRANTED** to the extent indicated.

The patent term adjustment has been determined to be **1108** days. The USPTO will *sua sponte* issue a certificate of correction reflecting the amount of PTA days determined by the recalculation.

Prior to the issuance of the certificate of correction, the USPTO will afford patentee an opportunity to be heard and request reconsideration. Accordingly, patentee has **one month or thirty (30) days**, whichever is longer, to file a request for reconsideration of this patent term adjustment calculation. See 35 U.S.C. 154(b)(3)(B)(ii) and 37 CFR 1.322(a)(4). No extensions of time will be granted under 37 CFR 1.136.

Patentee should use document code PET.OP if electronically filing a request for reconsideration of this patent term adjustment calculation. The patentee must also include the information required by 37 CFR 1.705(b)(2) and the fee required by 37 CFR 1.18(e). If patentee does not file a timely request for reconsideration of this patent term adjustment calculation including the information required by 37 CFR 1.705(b)(2) and the fee required by 37 CFR 1.18(e), the USPTO will issue a certificate of correction reflecting the PTA determination noted above.

Patentee should be aware that in order to preserve the right to review in the United States District Court for the District of Columbia of the USPTO patent term adjustment determination, patentee must ensure that he or she also take the steps required under 35 U.S.C. 154(b)(4)(A) in a timely manner. Nothing in the request for recalculation should be construed as providing an alternative time frame for commencing a civil action under 35 U.S.C. 154(b)(4)(A).

Any questions concerning this decision should be directed to the Office of Patent Legal Administration at 571-272-7702.

UNITED STATES PATENT AND TRADEMARK OFFICE

Commissioner for Patents
United States Patent and Trademark Office
P.O. Box 1450
Alexandria, VA 22313-1450
www.uspto.gov

HARNESS, DICKEY & PIERCE, P.L.C.
P.O. BOX 8910
RESTON, VA 20195

COPY MAILED

MAR 0 6 2008

OFFICE OF PETITIONS

In re Application of	:	
Wei-Su CHEN	:	
Application No. 10/978,534	:	DECISION ON PETITION
Filed: November 2, 2004	:	TO WITHDRAW
Attorney Docket No. 98730-000097/US	:	FROM RECORD
	:	

This is a decision on the Request to Withdraw as attorney or agent of record under 37 C.F.R. § 1.36(b), filed December 3, 2007.

The request is **NOT APPROVED**.

The request cannot be approved because no reasons for withdrawal have been provided. The Office cannot, at this time, determine whether practitioner's request is one of the mandatory or permissive reasons enumerated in 37 CFR 10.40. Any subsequent requests must include reasons for withdrawal. Please note that there is a space provided for on PTO/SB/83 (Request to Withdraw as Attorney or Agent) to supply practitioner's reasons.

All future communications from the Office will continue to be directed to the above-listed address until otherwise notified by applicant.

There is an outstanding Office action mailed January 25, 2008 that requires a reply by the applicant.

Telephone inquiries concerning this decision should be directed to the undersigned at 571-272-6735.

Diane Goodwyn
Petitions Examiner
Office of Petitions

cc: MORRIS MANNING MARTIN LLP
3343 PEAACHTREE ROAD, NE
1600 ATLANTA FINANCIAL CENTER
ATLANTA, GA 30326

UNITED STATES PATENT AND TRADEMARK OFFICE

UNITED STATES DEPARTMENT OF COMMERCE
United States Patent and Trademark Office
Address: COMMISSIONER FOR PATENTS
P.O. Box 1450
Alexandria, Virginia 22313-1450
www.uspto.gov

CROMPTON, SEAGER & TUFTE, LLC
1221 NICOLLET AVENUE
SUITE 800
MINNEAPOLIS, MN 55403-2420

Mail Date: 04/21/2010

Applicant	: Yoshio Ohno	: DECISION ON REQUEST FOR
Patent Number	: 7645351	: RECALCULATION of PATENT
Issue Date	: 01/12/2010	: TERM ADJUSTMENT IN VIEW
Appliction No	: 10/978,603	: OF WYETH AND NOTICE OF INTENT TO
Filed	: 11/01/2004	: ISSUE CERTIFICATE OF CORRECTION
		:

The Request for Recalculation is **GRANTED** to the extent indicated.

The patent term adjustment has been determined to be **622** days. The USPTO will *sua sponte* issue a certificate of correction reflecting the amount of PTA days determined by the recalculation.

Prior to the issuance of the certificate of correction, the USPTO will afford patentee an opportunity to be heard and request reconsideration. Accordingly, patentee has **one month or thirty (30) days**, whichever is longer, to file a request for reconsideration of this patent term adjustment calculation. See 35 U.S.C. 154(b)(3)(B)(ii) and 37 CFR 1.322(a)(4). No extensions of time will be granted under 37 CFR 1.136.

Patentee should use document code PET.OP if electronically filing a request for reconsideration of this patent term adjustment calculation. The patentee must also include the information required by 37 CFR 1.705(b)(2) and the fee required by 37 CFR 1.18(e). If patentee does not file a timely request for reconsideration of this patent term adjustment calculation including the information required by 37 CFR 1.705(b)(2) and the fee required by 37 CFR 1.18(e), the USPTO will issue a certificate of correction reflecting the PTA determination noted above.

Patentee should be aware that in order to preserve the right to review in the United States District Court for the District of Columbia of the USPTO patent term adjustment determination, patentee must ensure that he or she also take the steps required under 35 U.S.C. 154(b)(4)(A) in a timely manner. Nothing in the request for recalculation should be construed as providing an alternative time frame for commencing a civil action under 35 U.S.C. 154(b)(4)(A).

Any questions concerning this decision should be directed to the Office of Patent Legal Administration at 571-272-7702.

UNITED STATES PATENT AND TRADEMARK OFFICE

Commissioner for Patents
United States Patent and Trademark Office
P.O. Box 1450
Alexandria, VA 22313-1450
www.uspto.gov

FISH & RICHARDSON
P.O. BOX 1022
MINNEAPOLIS MN 55440-1022

COPY MAILED
MAY 3 1 2006
OFFICE OF PETITIONS

In re Application of	:	
Ori Weisberg et al	:	
Application No. 10/978,605	:	ON PETITION
Filed: November 1, 2004	:	
Attorney Docket No. 13445-027001	:	

This is a decision on the petition, filed May 30, 2006, under 37 CFR 1.313(c)(2) to withdraw the above-identified application from issue after payment of the issue fee.

The petition is **GRANTED**.

The above-identified application is withdrawn from issue for consideration of a submission under 37 CFR 1.114 (request for continued examination). See 37 CFR 1.313(c)(2).

Petitioner is advised that the issue fee paid on March 6, 2006, in the above-identified application cannot be refunded. If, however, the above-identified application is again allowed, petitioner may request that it be applied towards the issue fee required by the new Notice of Allowance.[1]

Telephone inquiries should be directed to the undersigned at (571) 272-3208.

The examiner of Technology Center AU 2874 will consider the request for continued examination under 37 CFR 1.114.

Karen Creasy
Karen Creasy
Petitions Examiner
Office of Petitions

---

[1] The request to apply the issue fee to the new Notice may be satisfied by completing and returning the new Issue Fee Transmittal Form PTOL-85(b), which includes the following language thereon: "Commissioner for Patents is requested to apply the Issue Fee and Publication Fee (if any) or re-apply any previously paid issue fee to the application identified above." Petitioner is advised that, whether a fee is indicated as being due or not, the Issue Fee Transmittal Form **must** be completed and timely submitted to avoid abandonment. Note the language in bold text on the first page of the Notice of Allowance and Fee(s) Due (PTOL-85).

UNITED STATES PATENT AND TRADEMARK OFFICE

Commissioner for Patents
United States Patent and Trademark Office
P.O. Box 1450
Alexandria, VA 22313-1450
www.uspto.gov

Paper No. _____

Date : May 31, 2006

TO : Director, Office of Patent Publication

FROM : Office of the Deputy Commissioner
for Patent Examination Policy

SUBJECT : Withdrawal from Issue of

Applicant(s) :Ori Weisberg et al
Application No. :10/978,605
Filed :November 1, 2004

The above-identified application has been assigned Patent No. 7,062,138 and an issue date of June 13, 2006.

It is hereby directed that this application be withdrawn from issue at the request of the applicant.

Do not refund the issue fee.

The following erratum should be published in the Official Gazette if the above-identified application is published in the OG of June 13, 2006:

"All reference to Patent No. 7,062,138 to Ori Weisberg et al of Massachusetts for PHOTONIC CRYSTAL WAVEGIDES AND SYSTEMS USING SUCH WAVEGUIDEW appearing in the Official Gazette of June 13, 2006 should be deleted since no patent was granted."

Karen Creasy

Karen Creasy
Petitions Examiner
Office of Petitions
Office of the Deputy Commissioner
for Patent Examination Policy

cc: Paul Harrison, MDW-4B03,(FAX-273-5468)
Deneise Boyd, MDE-3D39 (FAX-273-5124)
Mary Louise McAskill, ST-8C15 (FAX 305-4372)
Niomi Farmer, ST-8C14 (FAX-305-4372)
Mary E. Johnson (Cookie), MDE-7C71 (FAX 273-0038
Duane Davis P/OPC MDE-7D89

UNITED STATES PATENT AND TRADEMARK OFFICE

UNITED STATES DEPARTMENT OF COMMERCE
United States Patent and Trademark Office
Address: COMMISSIONER FOR PATENTS
P.O. Box 1450
Alexandria, Virginia 22313-1450
www.uspto.gov

PVF -- SYNOPSYS, INC
c/o PARK, VAUGHAN & FLEMING LLP
2820 FIFTH STREET
DAVIS, CA 95618-7759

Mail Date: 04/21/2010

Applicant	: Christopher Scott Jones	: DECISION ON REQUEST FOR
Patent Number	: 7586998	: RECALCULATION of PATENT
Issue Date	: 09/08/2009	: TERM ADJUSTMENT IN VIEW
Appliction No	: 10/978,610	: OF WYETH AND NOTICE OF INTENT TO
Filed	: 11/01/2004	: ISSUE CERTIFICATE OF CORRECTION
		:

The Request for Recalculation is **GRANTED** to the extent indicated.

The patent term adjustment has been determined to be **856** days. The USPTO will *sua sponte* issue a certificate of correction reflecting the amount of PTA days determined by the recalculation.

Prior to the issuance of the certificate of correction, the USPTO will afford patentee an opportunity to be heard and request reconsideration. Accordingly, patentee has **one month or thirty (30) days**, whichever is longer, to file a request for reconsideration of this patent term adjustment calculation. See 35 U.S.C. 154(b)(3)(B)(ii) and 37 CFR 1.322(a)(4). No extensions of time will be granted under 37 CFR 1.136.

Patentee should use document code PET.OP if electronically filing a request for reconsideration of this patent term adjustment calculation. The patentee must also include the information required by 37 CFR 1.705(b)(2) and the fee required by 37 CFR 1.18(e). If patentee does not file a timely request for reconsideration of this patent term adjustment calculation including the information required by 37 CFR 1.705(b)(2) and the fee required by 37 CFR 1.18(e), the USPTO will issue a certificate of correction reflecting the PTA determination noted above.

Patentee should be aware that in order to preserve the right to review in the United States District Court for the District of Columbia of the USPTO patent term adjustment determination, patentee must ensure that he or she also take the steps required under 35 U.S.C. 154(b)(4)(A) in a timely manner. Nothing in the request for recalculation should be construed as providing an alternative time frame for commencing a civil action under 35 U.S.C. 154(b)(4)(A).

Any questions concerning this decision should be directed to the Office of Patent Legal Administration at 571-272-7702.

UNITED STATES PATENT AND TRADEMARK OFFICE

Commissioner for Patents
United States Patent and Trademark Office
P.O. Box 1450
Alexandria, VA 22313-1450
www.uspto.gov

FOLEY AND LARDNER LLP
SUITE 500
3000 K STREET NW
WASHINGTON DC 20007

COPY MAILED
OCT 26 2009
OFFICE OF PETITIONS

In re Patent No. 7,563,541
Issued: July 21, 2009
Application No. 10/978,617
Filed: October 29, 2004
Attorney Docket No. 038469-0220
(P0020178.01 US)

: DECISION ON REQUEST
: FOR RECONSIDERATION OF
: PATENT TERM ADJUSTMENT

This is a decision on the "REQUEST FOR RECONSIDERATION OF PATENT TERM ADJUSTMENT UNDER 37 C.F.R. §1.705" filed July 31, 2009, requesting that the patent term adjustment determination for the above-identified patent be changed from eight hundred seventeen (817) days to one thousand two hundred ninety-two (1292) days.

Patentees request that the decision on this request for reconsideration of patent term adjustment be deferred or delayed until a final decision has been rendered in Wyeth v. Dudas. There is no specific regulatory provision for requesting that a petition under 37 CFR 1.705(d) be held in abeyance.

The request for reconsideration of patent term adjustment is **DISMISSED**.

On July 21, 2009, the above-identified application matured into US Patent No. 7,563,541 with a patent term adjustment of 817 days. This request for reconsideration of patent term adjustment was timely filed within two months of the issue date of the patent. See 37 CFR 1.705(d).

The Office acknowledges submission of the $200.00 fee set forth in 37 CFR 1.18(e). No additional fees are required.

Patentees request recalculation of the patent term adjustment based on the decision in Wyeth v. Dudas, 580 F. Supp. 2d 138, 88 U.S.P.Q. 2d 1538 (D.D.C. 2008). Patentees assert that in view of the decision in Wyeth, they are entitled to a total patent term adjustment of 1292 days, which includes 631 days due to exceeding three year pendency.

Patentees do not dispute that the total period of Office delay is the sum of the period of Three Years Delay (631 days) and the period of Examination Delay (825 days) to the

extent that these periods of delay are not overlapping. However, in effect, patentees contend that 156 days of the Three Year Delay period overlaps with the examination delay. Accordingly, patentees submit that the total period of adjustment for Office delay is 1300 days, which includes the period of Three Year Delay (631 days) and the period of Examination Delay (825 days), reduced by the period of overlap (156 days). As such, patentees assert entitlement to a patent term adjustment of 1292 days (631 + 825 reduced by 156 overlap – 8 (applicant delay)).

The Office contends that all 631 days for over three year pendency overlap with the 825 days accorded for Office delay during the pendency of the application, and thus, no additional days were entered for over three year delay. Patentees' calculation of the period of overlap is inconsistent with the Office's interpretation of this provision. 35 U.S.C. 154(b)(2)(A) limits the adjustment of patent term, as follows:

> to the extent that the periods of delay attributable to grounds specified in paragraph (1) overlap, the period of any adjustment granted under this subsection shall not exceed the actual number of days the issuance of the patent was delayed.

Likewise, 35 CFR 1.703(f) provides that:

> To the extent that periods of delay attributable to the grounds specified in § 1.702 overlap, the period of adjustment granted under this section shall not exceed the actual number of days the issuance of the patent was delayed.

As explained in *Explanation of 37 CFR 1.703(f) and of the United States Patent and Trademark Office Interpretation of 35 U.S.C. 154(b)(2)(A)*, 69 Fed. Reg. 34283 (June 21, 2004), the Office interprets 35 U.S.C. 154(b)(2)(A) as permitting either patent term adjustment under 35 U.S.C. 154(b)(1)(A)(i)-(iv), or patent term adjustment under 35 U.S.C. 154(b)(1)(B), but not as permitting patent term adjustment under both 35 U.S.C. 154(b)(1)(A)(i)-(iv) and 154(b)(1)(B). Accordingly, the Office implements the overlap provision as follows:

> If an application is entitled to an adjustment under 35 U.S.C. 154(b)(1)(B), the entire period during which the application was pending (except for periods excluded under 35 U.S.C. 154(b)(1)(B)(i)-(iii)), and not just the period beginning three years after the actual filing date of the application, is the period of delay under 35 U.S.C. 154(b)(1)(B) in determining whether periods of delay overlap under 35 U.S.C. 154(b)(2)(A). Thus, any days of delay for Office issuance of the patent more than 3 years after the filing date of the application, which overlap with the days of patent term adjustment accorded prior to the issuance of the patent will not result in any additional patent term adjustment. See 35 U.S.C.

154(b)(1)(B), 35 U.S.C. 154(b)(2)(A), and 37 CFR § 1.703(f). See *Changes to Implement Patent Term Adjustment Under Twenty Year Term; Final Rule*, 65 Fed. Reg. 56366 (Sept. 18, 2000). See also *Revision of Patent Term Extension and Patent Term Adjustment Provisions; Final Rule*, 69 Fed. Reg. 21704 (April 22, 2004), 1282 Off. Gaz. Pat. Office 100 (May 18, 2004). See also *Explanation of 37 CFR 1.703(f) and of the United States Patent and Trademark Office Interpretation of 35 U.S.C. 154(b)(2)(A),* 69 Fed. Reg. 34283 (June 21, 2004).

As stated in the *Explanation of 37 CFR 1.703(f) and of the United States Patent and Trademark Office Interpretation of 35 U.S.C. 154(b)(2)(A)*, the Office has consistently taken the position that if an application is entitled to an adjustment under the three-year pendency provision of 35 U.S.C. 154(b)(1)(B), the entire period during which the application was pending before the Office (except for periods excluded under 35 U.S.C. 154(b)(1)(B)(i)-(iii)), and not just the period beginning three years after the actual filing date of the application, is the relevant period under 35 U.S.C. 154(b)(1)(B) in determining whether periods of delay "overlap" under 35 U.S.C. 154(b)(2)(A).

This interpretation is consistent with the statute. Taken together the statute and rule provide that to the extent that periods of delay attributable to grounds specified in 35 U.S.C. 154(b)(1) and in corresponding § 1.702 overlap, the period of adjustment granted shall not exceed the actual number of days the issuance of the patent was delayed.

As such, the period for over three-year pendency does not overlap only to the extent that the actual dates in the period beginning three years after the date on which the application was filed overlap with the actual dates in the periods for failure of the Office to take action within specified time frames. In other words, consideration of the overlap does not begin three years after the filing date of the application.

In this instance, the relevant period under 35 U.S.C. 154(b)(1)(B) in determining whether periods of delay "overlap" under 35 U.S.C. 154(b)(2)(A) is the entire period during which the application was pending before the Office, October 29, 2004, to the date the patent issued on July 21, 2009. (There were no periods excluded under 35 U.S.C. 154(b)(1)(B)(i)-(iii)). Prior to the issuance of the patent, 825 days of patent term adjustment were accorded for the Office failing to respond within a specified time frame during the pendency of the application. All of the 631 days for Office delay in issuing the patent overlap with the 825 days of Office delay. During that time, the issuance of the patent was delayed by 825 days, not 825 + 631 days. The Office experienced 825 days of examination delay. Otherwise, the Office took all actions set forth in 37 CFR 1.702(a) within the prescribed time frames. Nonetheless, given the 825 days of Office delay and the time allowed within the time frames for processing and examination and the 8 days of applicant delay, as of the date the patent issued, the application was pending three years and 631 days. The Office did not delay 825 days and then an

additional 631 days. Accordingly, 825 days of patent term adjustment (not 825 and 631 days) was properly entered. The period of delay of 631 days attributable to the delay in the issuance of the patent overlaps with the adjustment of 825 days attributable to grounds specified in § 1.702(a)(1). Entry of both periods is not warranted. 825 days is determined to be the actual number of days that the issuance of the patent was delayed, considering the 631 days over three years to the issuance of the patent.

Accordingly, at issuance, the Office properly entered 0 additional days of patent term adjustment for the Office taking in excess of three years to issue the patent.

In view thereof, no adjustment to the patent term will be made.

Telephone inquiries specific to this decision should be directed to Senior Petitions Attorney Patricia Faison-Ball at (571) 272-3212.

/Kery A. Fries/

Kery A. Fries
Senior Legal Advisor
Office of Patent Legal Administration
Office of Deputy Commissioner
for Examination Policy

UNITED STATES PATENT AND TRADEMARK OFFICE

Commissioner for Patents
United States Patent and Trademark Office
P.O. Box 1450
Alexandria, VA 22313-1450
www.uspto.gov

FOLEY & LARDNER LLP
777 EAST WISCONSIN AVENUE
MILWAUKEE WI 53202-5306

COPY MAILED
MAR 15 2010

In re Patent No. 7,563,541	: DECISION ON REQUEST
Issued: July 21, 2009	: FOR RECONSIDERATION
Application No. 10/978,617	: OF PATENT TERM ADJUSTMENT
Filed: October 29, 2004	: AND
Attorney Docket No. 038469-0220	: NOTICE OF INTENT TO ISSUE
(P0020178.01 US)	: CERTIFICATE OF CORRECTION

This is a decision on the RENEWED REQUEST FOR RECONSIDERATION OF PATENT TERM ADJUSTMENT UNDER 37 C.F.R. §1.705 filed on December 18, 2009, requesting that the patent term adjustment indicated on the above-identified patent be corrected from 817 days to 1292 days. The Office is construing this request as a request under 1.181 to invoke supervisory authority of the Director and is filed within the two month time period pursuant to 37 CFR 1.181(f).

The petition to correct the patent term adjustment indicated on the above-identified patent to indicate that the term of the above-identified patent, considering the 156 days of overlap, is adjusted by one thousand two hundred ninety-two (1292) days and is **GRANTED**.

The application is being forwarded to the Certificates of Branch for issuance of a certificate of correction. The Office will issue a certificate of correction indicating that the term of the above-identified patent is extended or adjusted by **one thousand two hundred ninety-two (1292)** days.

Telephone inquiries specific to this decision should be directed to Senior Petitions Attorney Patricia Faison-Ball at (571) 272-3212.

/Kery A. Fries/

Kery A. Fries
Senior Legal Advisor
Office of Patent Legal Administration
Office of Associate Commissioner
for Patent Examination Policy

Enclosure: Copy of DRAFT Certificate of Correction

DRAFT

UNITED STATES PATENT AND TRADEMARK OFFICE

CERTIFICATE OF CORRECTION

PATENT : 7,563,541 B2

DATED : July 21, 2009

INVENTOR(S) : William G. Howard

It is certified that error appears in the above-identified patent and that said Letters Patent is hereby corrected as shown below:

On the cover page,

[*] Notice: Subject to any disclaimer, the term of this patent is extended or adjusted under 35 USC 154(b) by (817) days

Delete the phrase "by 817 days" and insert – by 1292 days--

UNITED STATES PATENT AND TRADEMARK OFFICE

UNITED STATES DEPARTMENT OF COMMERCE
United States Patent and Trademark Office
Address: COMMISSIONER FOR PATENTS
P.O. Box 1450
Alexandria, Virginia 22313-1450
www.uspto.gov

NTT DoCoMo Inc/BHGL
P.O. Box 10395
Chicago, IL 60610

Mail Date: 04/21/2010

Applicant	: Takashi Ito	: DECISION ON REQUEST FOR
Patent Number	: 7590697	: RECALCULATION of PATENT
Issue Date	: 09/15/2009	: TERM ADJUSTMENT IN VIEW
Appliction No	: 10/978,620	: OF WYETH AND NOTICE OF INTENT TO
Filed	: 11/01/2004	: ISSUE CERTIFICATE OF CORRECTION
		:

The Request for Recalculation is **GRANTED** to the extent indicated.

The patent term adjustment has been determined to be **917** days. The USPTO will *sua sponte* issue a certificate of correction reflecting the amount of PTA days determined by the recalculation.

Prior to the issuance of the certificate of correction, the USPTO will afford patentee an opportunity to be heard and request reconsideration. Accordingly, patentee has **one month or thirty (30) days**, whichever is longer, to file a request for reconsideration of this patent term adjustment calculation. See 35 U.S.C. 154(b)(3)(B)(ii) and 37 CFR 1.322(a)(4). No extensions of time will be granted under 37 CFR 1.136.

Patentee should use document code PET.OP if electronically filing a request for reconsideration of this patent term adjustment calculation. The patentee must also include the information required by 37 CFR 1.705(b)(2) and the fee required by 37 CFR 1.18(e). If patentee does not file a timely request for reconsideration of this patent term adjustment calculation including the information required by 37 CFR 1.705(b)(2) and the fee required by 37 CFR 1.18(e), the USPTO will issue a certificate of correction reflecting the PTA determination noted above.

Patentee should be aware that in order to preserve the right to review in the United States District Court for the District of Columbia of the USPTO patent term adjustment determination, patentee must ensure that he or she also take the steps required under 35 U.S.C. 154(b)(4)(A) in a timely manner. Nothing in the request for recalculation should be construed as providing an alternative time frame for commencing a civil action under 35 U.S.C. 154(b)(4)(A).

Any questions concerning this decision should be directed to the Office of Patent Legal Administration at 571-272-7702.

UNITED STATES PATENT AND TRADEMARK OFFICE

Commissioner for Patents
United States Patent and Trademark Office
P.O. Box 1450
Alexandria, VA 22313-1450
www.uspto.gov

GEORGE O SAILE
28 DAVIS AVENUE
POUGHKEEPSIE NY 12603

COPY MAILED

JAN 0 7 2008

OFFICE OF PETITIONS

In re Application of

SINGAMSETTY, Suresh
Application No. 10/978,626
Filed: November 01, 2004
Attorney Docket No. **JA04-001**

DECISION ON PETITION
TO WITHDRAW
FROM RECORD

This is a decision on the Request to Withdraw as attorney or agent of record under 37 C.F.R. § 1.36(b), filed November 13, 2007.

The request is **APPROVED**.

A grantable request to withdraw as attorney/agent of record must be signed by every attorney/agent seeking to withdraw or contain a clear indication that one attorney is signing on behalf of another/others. A request to withdraw will not be approved unless at least 30 (thirty) days would remain between the date of approval and the later of the expiration date of a time to file a response or the expiration date of the maximum time period which can be extended under 37 C.F.R. § 1.136(a).

The request was signed by Stephen Ackerman on behalf of all attorneys of record who are associated. All attorneys/agents associated have been withdrawn. Applicant is reminded that there is no attorney of record at this time.

The request to change the correspondence of record is not acceptable as the requested correspondence address is not that of: (1) the first named signing inventor; or (2) an intervening assignee of the entire interest under 37 C.F.R 3.71. All future communications from the Office will be directed to the first named signing inventor at the first copied address below until otherwise properly notified by the applicant.

There is an outstanding Office action mailed August 10, 2007 that requires a reply from the applicant.

Telephone inquiries concerning this decision should be directed to Tredelle Jackson at 571-272-2783.

Monica A. Graves
Petitions Examiner
Office of Petitions

cc: **SURESH SINGAMESETTY**
9826 REAGAN RD. #26
SAN DIEGO, CA 92126

cc: **CHRIS ALFORD**
JAALAA, INC.
3950 SORRENTO VALLEY BLVD.
SAN DIEGO, CA 92121

UNITED STATES PATENT AND TRADEMARK OFFICE

UNITED STATES DEPARTMENT OF COMMERCE
United States Patent and Trademark Office
Address: COMMISSIONER FOR PATENTS
P.O. Box 1450
Alexandria, Virginia 22313-1450
www.uspto.gov

CARLSON, GASKEY & OLDS, P.C.
400 WEST MAPLE ROAD
SUITE 350
BIRMINGHAM, MI 48009

Mail Date: 04/21/2010

Applicant	: Christopher McAuliffe	: DECISION ON REQUEST FOR
Patent Number	: 7575421	: RECALCULATION of PATENT
Issue Date	: 08/18/2009	: TERM ADJUSTMENT IN VIEW
Appliction No	: 10/978,641	: OF WYETH AND NOTICE OF INTENT TO
Filed	: 11/01/2004	: ISSUE CERTIFICATE OF CORRECTION
		:

The Request for Recalculation is **GRANTED** to the extent indicated.

The patent term adjustment has been determined to be **1245** days. The USPTO will *sua sponte* issue a certificate of correction reflecting the amount of PTA days determined by the recalculation.

Prior to the issuance of the certificate of correction, the USPTO will afford patentee an opportunity to be heard and request reconsideration. Accordingly, patentee has **one month or thirty (30) days**, whichever is longer, to file a request for reconsideration of this patent term adjustment calculation. See 35 U.S.C. 154(b)(3)(B)(ii) and 37 CFR 1.322(a)(4). No extensions of time will be granted under 37 CFR 1.136.

Patentee should use document code PET.OP if electronically filing a request for reconsideration of this patent term adjustment calculation. The patentee must also include the information required by 37 CFR 1.705(b)(2) and the fee required by 37 CFR 1.18(e). If patentee does not file a timely request for reconsideration of this patent term adjustment calculation including the information required by 37 CFR 1.705(b)(2) and the fee required by 37 CFR 1.18(e), the USPTO will issue a certificate of correction reflecting the PTA determination noted above.

Patentee should be aware that in order to preserve the right to review in the United States District Court for the District of Columbia of the USPTO patent term adjustment determination, patentee must ensure that he or she also take the steps required under 35 U.S.C. 154(b)(4)(A) in a timely manner. Nothing in the request for recalculation should be construed as providing an alternative time frame for commencing a civil action under 35 U.S.C. 154(b)(4)(A).

Any questions concerning this decision should be directed to the Office of Patent Legal Administration at 571-272-7702.

UNITED STATES PATENT AND TRADEMARK OFFICE

Commissioner for Patents
United States Patent and Trademark Office
P.O. Box 1450
Alexandria, VA 22313-1450
www.uspto.gov

BARRY W. CHAPIN, ESQ.
CHAPIN INTELLECTUAL PROPERTY LAW, LLC
WESTBOROUGH OFFICE PARK
1700 WEST PARK DRIVE, SUITE 280
WESTBOROUGH MA 01581

COPY MAILED

FEB 0 2 2009

OFFICE OF PETITIONS

In re Application of	:	
Liang et al.	:	
Application No. 10/978,662	:	DECISION ON PETITION
Filed: November 1, 2004	:	
Attorney Docket No. EMP04-32	:	

This is a decision on the petition under the unintentional provisions of 37 CFR 1.137(b), filed August 25, 2008, to revive the above-identified application.

The petition is **GRANTED**.

This application became abandoned for failure to timely pay the issue fee on or before August 21, 2008, as required by the Notice of Allowance and Fee(s) Due mailed May 21, 2008. Accordingly, the date of abandonment of this application is August 22, 2008. A Notice of Abandonment was mailed August 28, 2008.

The petition satisfies the requirements of 37 CFR 1.137(b) in that petitioner has supplied (1) the reply in the form of payment of the issue fee of $720.00; (2) the petition fee of $770.00; and (3) a proper statement of unintentional delay.

Telephone inquiries concerning this decision should be directed to Joan Olszewski at (571) 272-7751.

This application is being referred to the Office of Data Management for processing into a patent.

/Liana Walsh/
Liana Walsh
Petitions Examiner
Office of Petitions

UNITED STATES PATENT AND TRADEMARK OFFICE

UNITED STATES DEPARTMENT OF COMMERCE
United States Patent and Trademark Office
Address: COMMISSIONER FOR PATENTS
P.O. Box 1450
Alexandria, Virginia 22313-1450
www.uspto.gov

APPLICATION NO.	FILING DATE	FIRST NAMED INVENTOR	ATTORNEY DOCKET NO.	CONFIRMATION NO.
10/978,665	11/01/2004	Mark S. Evans	200402938-1	1498

7590 04/22/2008
HEWLETT PACKARD COMPANY
P O BOX 272400, 3404 E. HARMONY ROAD
INTELLECTUAL PROPERTY ADMINISTRATION
FORT COLLINS, CO 80527-2400

EXAMINER
HU, JINSONG

ART UNIT	PAPER NUMBER
2154	

NOTIFICATION DATE	DELIVERY MODE
04/22/2008	ELECTRONIC

DECISION GRANTING PETITION UNDER 37 CFR 1.138(d)

The declaration of express abandonment is recognized

This is in response to the petition under 37 CFR 1.138(d), requesting for a refund of any previously paid search fee and excess claims fee in the above-identified application.

The petition is granted.

The express abandonment is recognized. Any previously paid search fee and excess claims fee are hereby refunded.

Telephone inquiries should be directed to the Office of Data Management at (571) 272-4200.

Patent Publication Branch
Office of Data Management

Adjustment date: 04/21/2008 DTERRY 10978665
11/04/2004 MBIZUNES 00000008 082025
02 FC:1202 252.00 CR
03 FC:1201 264.00 CR

FORM PET651G (Rev. 08/07)

UNITED STATES PATENT AND TRADEMARK OFFICE

UNITED STATES DEPARTMENT OF COMMERCE
United States Patent and Trademark Office
Address: COMMISSIONER FOR PATENTS
P.O. Box 1450
Alexandria, Virginia 22313-1450
www.uspto.gov

APPLICATION NO.	FILING DATE	FIRST NAMED INVENTOR	ATTORNEY DOCKET NO.	CONFIRMATION NO.
10/978,665	11/01/2004	Mark S. Evans	200402938-1	1498

22879 7590 04/22/2008
HEWLETT PACKARD COMPANY
P O BOX 272400, 3404 E. HARMONY ROAD
INTELLECTUAL PROPERTY ADMINISTRATION
FORT COLLINS, CO 80527-2400

EXAMINER
HU, JINSONG

ART UNIT	PAPER NUMBER
2154	

NOTIFICATION DATE	DELIVERY MODE
04/22/2008	ELECTRONIC

Please find below and/or attached an Office communication concerning this application or proceeding.

The time period for reply, if any, is set in the attached communication.

Notice of the Office communication was sent electronically on above-indicated "Notification Date" to the following e-mail address(es):

JERRY.SHORMA@HP.COM
mkraft@hp.com
ipa.mail@hp.com

Notice of Abandonment	Application No.	Applicant(s)	
	10/978,665	EVANS ET AL.	
	Examiner	Art Unit	
	KIMBERLY A. TERRELL	3651	

-- The MAILING DATE of this communication appears on the cover sheet with the correspondence address--

This application is abandoned in view of:

1. ☐ Applicant's failure to timely file a proper reply to the Office letter mailed on _____.
   (a) ☐ A reply was received on _____ (with a Certificate of Mailing or Transmission dated _____), which is after the expiration of the period for reply (including a total extension of time of _____ month(s)) which expired on _____.
   (b) ☐ A proposed reply was received on _____, but it does not constitute a proper reply under 37 CFR 1.113 (a) to the final rejection.
   (A proper reply under 37 CFR 1.113 to a final rejection consists only of: (1) a timely filed amendment which places the application in condition for allowance; (2) a timely filed Notice of Appeal (with appeal fee); or (3) a timely filed Request for Continued Examination (RCE) in compliance with 37 CFR 1.114).
   (c) ☐ A reply was received on _____ but it does not constitute a proper reply, or a bona fide attempt at a proper reply, to the non-final rejection. See 37 CFR 1.85(a) and 1.111. (See explanation in box 7 below).
   (d) ☐ No reply has been received.

2. ☐ Applicant's failure to timely pay the required issue fee and publication fee, if applicable, within the statutory period of three months from the mailing date of the Notice of Allowance (PTOL-85).
   (a) ☐ The issue fee and publication fee, if applicable, was received on _____ (with a Certificate of Mailing or Transmission dated _____), which is after the expiration of the statutory period for payment of the issue fee (and publication fee) set in the Notice of Allowance (PTOL-85).
   (b) ☐ The submitted fee of $_____ is insufficient. A balance of $_____ is due.
   The issue fee required by 37 CFR 1.18 is $_____. The publication fee, if required by 37 CFR 1.18(d), is $_____.
   (c) ☐ The issue fee and publication fee, if applicable, has not been received.

3. ☐ Applicant's failure to timely file corrected drawings as required by, and within the three-month period set in, the Notice of Allowability (PTO-37).
   (a) ☐ Proposed corrected drawings were received on _____ (with a Certificate of Mailing or Transmission dated _____), which is after the expiration of the period for reply.
   (b) ☐ No corrected drawings have been received.

4. ☒ The letter of express abandonment which is signed by the attorney or agent of record, the assignee of the entire interest, or all of the applicants.

5. ☐ The letter of express abandonment which is signed by an attorney or agent (acting in a representative capacity under 37 CFR 1.34(a)) upon the filing of a continuing application.

6. ☐ The decision by the Board of Patent Appeals and Interference rendered on _____ and because the period for seeking court review of the decision has expired and there are no allowed claims.

7. ☐ The reason(s) below:

/Kimberly Terrell/
Office of Data Management
571-272-4200

Petitions to revive under 37 CFR 1.137(a) or (b), or requests to withdraw the holding of abandonment under 37 CFR 1.181, should be promptly filed to minimize any negative effects on patent term.

UNITED STATES PATENT AND TRADEMARK OFFICE

Commissioner for Patents
United States Patent and Trademark Office
P.O. Box 1450
Alexandria, VA 22313-1450
www.uspto.gov
DRW Jul-08

JENKINS, WILSON, TAYLOR & HUNT, P. A.
Suite 1200 UNIVERSITY TOWER
3100 TOWER BLVD.,
DURHAM NC 27707

COPY MAILED

JUL 25 2008

In re Application of	:	
Franzen et al.	:	
Application Number: 10/978678	:	DECISION ON PETITION
Filing Date: 11/01/2004	:	
Attorney Docket Number:	:	
297/177/2	:	

This is a decision on the petition, filed on May 27, 2008, under 37 CFR 1.183 seeking waiver of 37 CFR 1.132 in that it requires that a declaration filed thereunder by signed by all inventors.

The petition is **dismissed**.

Any request for reconsideration of this decision must be submitted within TWO (2) MONTHS from the mail date of this decision. Extensions of time under 37 CFR 1.136(a) are permitted. **FAILURE TO TIMELY RESPOND WILL RESULT IN ABANDONMENT OF THE APPLICATION.** The reconsideration request should include a cover letter entitled "Renewed Petition Under 37 CFR 1.183."

On November 1, 2004, the application was filed.

On May 18, 2005, an executed declaration was filed naming Stephan Franzen and Daniel Feldheim as joint inventors.

On May 25, 2007, a final Office action was mailed, setting a three (3) month period for reply. The final Office action stated, *inter alia*, that Claims 1-40 were rejected under 35 U.S.C. 102(e), but that the rejection might be overcome by, inter alia, a showing under 37 CFR 1.132 that any invention disclosed but not claimed in the reference was derived from the inventor of this application and is thus not the invention "by another," or by an appropriate showing under 37 CFR 1.131.

On November 26, 2007, a Notice of Appeal was filed, accompanied by a three (3) month extension of time.

On May 27, 2008, a Request for Continued Examination (RCE) Transmittal was filed, along with a four (4) month extension of time, a declaration pursuant to 37 CFR 1.132 signed by joint inventor Franzen, and the subject petition.

Petitioners state that joint inventor Feldheim could not be reached. Specifically, petitioners state that Feldheim was sent a copy of the application and affidavit under 37 CFR 1.132 by e-mail on October 11, 2007, but that an email was received back stating the email address used for Feldheim did not exist. Petitioners then located a new email address for Feldheim and, on November 26, 2007, sent a copy the Declaration under 37 CFR 1.132 and a copy of the draft amendment, and the application as filed to the new email address, but that no response was received. Petitioners further state that a further email including attachments was sent on March 27, 2008, but that no response was received.

Suspension of the rules under 37 CFR 1.183 may be granted in an "extraordinary situation, when justice requires." The facts presented on the record do not adequately establish an extraordinary situation. Petitioner has not sufficiently established any special circumstances of equities that would require suspension of the rules in the interests of justice.

There is no requirement for a showing under 37 CFR 1.47, as noted above. This application bears an original Declaration executed by all joint inventors, and thus, the provisions of 37 CFR 1.47 do not apply in this instance. Nevertheless, it is appropriate to apply the principles thereof to the situation at hand.

With regard to the sending of the documents by email, the transmission of documents via Email, while a common practice, can be problematic. Transmission and receipt of documents-whether in image, word-processing, spreadsheet or other form-can be effected by differences in software generation between the sender and recipient(s), and other interferences include but are not limited to sender's and recipient's Internet service provider's (ISP) and/or office/personal security firewall systems.

Thus, in the absence of an express statement from a non-signing inventor(s) that he/she/they have received, opened and read a document, unlike a printed page in the language of the recipient there is as of this writing no basis <u>to presume</u> that an Emailed document was in a form that can be read <u>and</u> comprehended.

Petitioners may show proof that a copy of the application was sent or given to the non-signing inventor for review by providing a copy of the cover letter transmitting the application papers (the application, amendments, and declaration under 37 CFR 1.132) to the non-signing inventor or details given in an affidavit or declaration of facts by a person having first-hand knowledge of the details.

In this regard, a copy of the application papers should be sent to the **last known address** of the non-signing inventor, or, if the non-signing inventor is represented by counsel, to the address of the non-signing inventor's attorney.[1]

If repeated efforts to locate the inventor(s) and obtain the declaration under 37 CFR 1.132 are unsuccessful, petitioners will have shown that the inventor(s) has refused to sign the declaration under 37 CFR 1.132.

Further correspondence with respect to this matter should be addressed as follows:

By mail: Mail Stop Petition
Commissioner for Patents
P.O. Box 1450
Alexandria, VA 22313-1450

By FAX: (571)273-8300
Attn: Office of Petitions

By hand: Customer Service Window
Mail Stop Petition
Randolph Building
401 Dulany Street
Alexandria, VA 22314

Telephone inquiries related to this decision should be directed to the undersigned at 571.272.3231.

D Wood

Douglas I. Wood
Senior Petitions Attorney
Office of Petitions

---

[1] MPEP 409.03(d)(II).

UNITED STATES PATENT AND TRADEMARK OFFICE

Commissioner for Patents
United States Patent and Trademark Office
P.O. Box 1450
Alexandria, VA 22313-1450
www.uspto.gov
DIW Nov-08

JENKINS, WILSON, TAYLOR & HUNT, P. A.
Suite 1200 UNIVERSITY TOWER
3100 TOWER BLVD.,
DURHAM NC 27707

COPY MAILED
NOV 20 2008

In re Application of	:	
Franzen et al.	:	
Application Number: 10/978678	:	DECISION ON PETITION
Filing Date: 11/01/2004	:	
Attorney Docket Number:	:	
297/177/2	:	

This is a decision on the renewed petition, filed on October 27, 2008, under 37 CFR 1.183 seeking waiver of 37 CFR 1.132 in that it requires that a declaration filed thereunder be signed by all inventors.

The petition is **GRANTED**.

In view of the efforts recounted to obtained the signature of joint inventor Danel Feldheim, it is agreed that justice would be served by waiving the requirement for his signature on the declaration filed under 37 CFR 1.132.

The $400.00 petition fee has been received.

The application is being referred to the Technology Center for further processing.

Telephone inquiries related to this decision should be directed to the undersigned at 571.272.3231.

D Wood

Douglas I. Wood
Senior Petitions Attorney
Office of Petitions

UNITED STATES PATENT AND TRADEMARK OFFICE

Commissioner for Patents
United States Patent and Trademark Office
P.O. Box 1450
Alexandria, VA 22313-1450
www.uspto.gov

MR. ADRIAN D. BATTISON
ADE & COMPANY
1700-360 MAIN STREET
WINNIPEG, MANITOBA, CANADA R3C 3Z3

COPY MAILED

SEP 2 2 2005

OFFICE OF PETITIONS

In re Application of	:	
Kenneth Roy Meissner et al	:	
Application No. 10/978,693	:	DECISION GRANTING STATUS
Filed: November 2, 2004	:	UNDER 37 CFR 1.47(A)
For: CARBOY SUPPORT BRACKET AND	:	
METHOD OF USING SAME	:	

This is in response to the petition under 37 CFR 1.47(a), filed March 14, 2005.

The petition is **granted**.

Petitioner has shown that the non-signing inventor has refused to join in the filing of the above-identified application.

The above-identified application and papers have been reviewed and found in compliance with 37 CFR 1.47(a). This application is hereby accorded Rule 1.47(a) status. As provided in Rule 1.47(c), this Office will forward notice of this application's filing to the non-signing inventor at the address given in the petition. Notice of the filing of this application will also be published in the Official Gazette.

Telephone inquiries regarding this decision should be directed to Petitions Examiner Karen Creasy at (571) 272-3208.

This matter is being referred to Technology Center AU 1746 for examination in due course.

Karen Creasy

Karen Creasy
Petitions Examiner
Office of Petitions
Office of the Deputy Commissioner
for Patent Examination Policy

UNITED STATES PATENT AND TRADEMARK OFFICE

Commissioner for Patents
United States Patent and Trademark Office
P.O. Box 1450
Alexandria, VA 22313-1450
www.uspto.gov

COPY MAILED

OCT 0 8 2009

OFFICE OF PETITIONS

FOLEY & LARDNER LLP
777 EAST WISCONSIN AVENUE
MILWAUKEE, WI 53202-5306

In re Application of	:	
Howard, et al.	:	
Application No. 10/978,722	:	ON APPLICATION FOR
Filed: October 29, 2004	:	PATENT TERM ADJUSTMENT
Atty Docket No. 038469-0221	:	
(P-20539.01)	:	

This is in response to the "REQUEST FOR RECONSIDERATION PATENT TERM ADJUSTMENT UNDER 37 C.F.R. § 1.705" filed August 7, 2009. Applicants submits that the patent term adjustment to be indicated on the patent is two hundred seventy-two (272) days, not two hundred (200) days as calculated by the Office as of the mailing of the initial determination of patent term adjustment. Applicants request this correction solely on the basis that the Office will take in excess of three years to issue this patent.

As the instant application for patent term adjustment requests reconsideration of the patent term adjustment as it relates to the Office's failure to issue the patent within 3 years of the filing date, the application for patent term adjustment under 37 CFR 1.705(b) is **DISMISSED as PREMATURE**.

Knowledge of the actual date the patent issues is required to calculate the amount, if any, of additional patent term patentee is entitled to for Office failure to issue the patent within 3 years. See § 1.702(b). (This is true even where a request for continued examination (RCE) was filed). The computer will not undertake the § 1.702(b) calculation until the actual date of issuance of the patent has been determined. Likewise, the computer will not calculate any further Office delay under § 1.702(a)(4) or applicant delay under § 1.704(c)(10) until the actual date of issuance of the patent has been determined. As such, the Office can not make a determination on the correctness of the patent term adjustment until the patent has issued.

Requesting reconsideration of the patent term adjustment to be indicated on the patent under 37 CFR 1.705(b) based on the

initial determination of patent term adjustment and a projected issuance date of the patent (or even the filing date of the request for continued examination) is premature. Accordingly, it is appropriate to dismiss as premature such a request.

Rather than file an application for patent term adjustment under 37 CFR 1.705(b) contesting the 37 CFR 1.702(b) calculation at the time of the mailing of the notice of allowance, applicant is advised that they may wait until the time of the issuance of the patent and file a request for reconsideration of the patent term adjustment pursuant to 37 CFR 1.705(d). As the USPTO does not calculate the amount of time earned pursuant to 37 CFR 1.702(b) until the time of the issuance of the patent, the Office will consider any request for reconsideration of the patent term adjustment due to an error in the calculation of 37 CFR 1.702(b) to be timely if the request for reconsideration is filed within two months of the issuance of the patent. However, as to all other bases for contesting the initial determination of patent term adjustment received with the notice of allowance, applicant must timely file an application for patent term adjustment prior to the payment of the issue fee[1].

It is noted that any period of adjustment will be entered in light of 35 U.S.C. 154(B) GUARANTEE OF NO MORE THAN 3-YEAR APPLICATION PENDENCY, which provides that:

> Subject to the limitations under paragraph (2), if the issue of an original patent is delayed due to the failure of the United States Patent and Trademark Office to issue a patent within 3 years after the actual filing date of the application in the United States, not including —

[1] For example, if applicant disputes both the calculation of patent term adjustment under 37 CFR 1.702(a)(1) for Office failure to mail a first Office action or notice of allowance not later than fourteen months after the date on which the application was filed and under 37 CFR 1.702(b) for Office failure to issue a patent within three years of the actual filing date of the application, then applicant must still timely file an application for patent term adjustment prior to the payment of the issue fee to contest the calculation of Office delay in issuing a first Office action or notice of allowance. See 37 CFR 1.705(b) and 35 U.S.C. 154(b)(3)(B). A dispute as to the calculation of the §1.702(a)(1) period raised on request for reconsideration of patent term adjustment under 37 CFR 1.705(d) will be dismissed as untimely filed.

(i) any time consumed by continued examination of the application requested by the applicant under section 132(b);

It is further noted that a Request for Continued Examination (RCE) was filed in this application on January 9, 2008.

The Office acknowledges submission of the $200.00 fee set forth in 37 CFR 1.18(e) for consideration of the application for patent term adjustment under 37 CFR 1.705(b).

Any request for reconsideration of the patent term adjustment indicated on the patent must be timely filed within 2 months after issuance pursuant to 37 CFR 1.705(d) and must include payment of the required fee under 37 CFR 1.18(e).

The Office of Data Management has been advised of this decision. This application is being referred to the Office of Data Management for issuance of the patent.

Telephone inquiries specific to this decision should be directed to Kenya A. McLaughlin, Petitions Attorney, at (571) 272-3222.

Christina Tartera Donnell

Christina Tartera Donnell
Senior Petitions Attorney
Office of Petitions

UNITED STATES PATENT AND TRADEMARK OFFICE

UNITED STATES DEPARTMENT OF COMMERCE
United States Patent and Trademark Office
Address: COMMISSIONER FOR PATENTS
P.O. Box 1450
Alexandria, Virginia 22313-1450
www.uspto.gov

FOLEY & LARDNER LLP
777 EAST WISCONSIN AVENUE
MILWAUKEE, WI 53202-5306

Mail Date: 04/21/2010

Applicant	: William G. Howard	: DECISION ON REQUEST FOR
Patent Number	: 7662509	: RECALCULATION of PATENT
Issue Date	: 02/16/2010	: TERM ADJUSTMENT IN VIEW
Appliction No	: 10/978,722	: OF WYETH AND NOTICE OF INTENT TO
Filed	: 10/29/2004	: ISSUE CERTIFICATE OF CORRECTION
		:

The Request for Recalculation is **GRANTED** to the extent indicated.

The patent term adjustment has been determined to be **177** days. The USPTO will *sua sponte* issue a certificate of correction reflecting the amount of PTA days determined by the recalculation.

Prior to the issuance of the certificate of correction, the USPTO will afford patentee an opportunity to be heard and request reconsideration. Accordingly, patentee has **one month or thirty (30) days**, whichever is longer, to file a request for reconsideration of this patent term adjustment calculation. See 35 U.S.C. 154(b)(3)(B)(ii) and 37 CFR 1.322(a)(4). No extensions of time will be granted under 37 CFR 1.136.

Patentee should use document code PET.OP if electronically filing a request for reconsideration of this patent term adjustment calculation. The patentee must also include the information required by 37 CFR 1.705(b)(2) and the fee required by 37 CFR 1.18(e). If patentee does not file a timely request for reconsideration of this patent term adjustment calculation including the information required by 37 CFR 1.705(b)(2) and the fee required by 37 CFR 1.18(e), the USPTO will issue a certificate of correction reflecting the PTA determination noted above.

Patentee should be aware that in order to preserve the right to review in the United States District Court for the District of Columbia of the USPTO patent term adjustment determination, patentee must ensure that he or she also take the steps required under 35 U.S.C. 154(b)(4)(A) in a timely manner. Nothing in the request for recalculation should be construed as providing an alternative time frame for commencing a civil action under 35 U.S.C. 154(b)(4)(A).

Any questions concerning this decision should be directed to the Office of Patent Legal Administration at 571-272-7702.

UNITED STATES PATENT AND TRADEMARK OFFICE

UNITED STATES DEPARTMENT OF COMMERCE
United States Patent and Trademark Office
Address: COMMISSIONER FOR PATENTS
P.O. Box 1450
Alexandria, Virginia 22313-1450
www.uspto.gov

FOLEY & LARDNER LLP
777 EAST WISCONSIN AVENUE
MILWAUKEE, WI 53202-5306

Mail Date: 05/18/2010

Applicant : William G. Howard
Patent Number : 7662509
Issue Date : 02/16/2010
Application No : 10/978,722
Filed : 10/29/2004

: NOTICE CONCERNING IMPROPER
: CALCULATION OF PATENT TERM
: ADJUSTMENT BASED UPON USPTO
: IMPROPERLY MEASURING REDUCTION
: PERIOD UNDER 37 CFR 1.704(c)(10).

The United States Patent and Trademark Office (USPTO) discovered that in processing the recent recalculation decisions mailed in response to patentee's filed Request for Recalculation of Patent Term Adjustment in view of Wyeth, the USPTO improperly measured the reduction period for reductions under 37 CFR 1.704(c)(10). Pursuant to 37 CFR 1.704(c)(10), patentee's reduction begins on the date of filing the amendment under 37 CFR 1.312 ("1.312 amendment") or other related paper and ends on the date that the Office mails a response to the filing of the 1.312 amendment or other paper. It has been discovered that during the recalculation, the calculation failed to the limit the reduction to the mail date of the response to the 1.312 amendment or other paper. Accordingly, patentee's reductions were greater than warranted.

This notice **VACATES** the previous GRANTED request for recalculation and provides patentee with a revised GRANTED recalculation.

The patent term adjustment has been determined to be **234** days. The USPTO will *sua sponte* issue a certificate of correction reflecting the amount of patent term adjustment (PTA) days determined by the recalculation.

Prior to the issuance of the certificate of correction, the USPTO will afford patentee an opportunity to be heard and request reconsideration. Accordingly, patentee has **one month or thirty (30) days** from the mail date of this notice, whichever is longer, to file a request for reconsideration of this PTA calculation. See 35 U.S.C. § 154(b)(3)(B)(ii) and 37 CFR 1.322(a)(4).

Patentee should use document code PET.OP if electronically filing a request for reconsideration of this PTA calculation. The patentee must also include the information required by 37 CFR 1.705(b)(2), and the fee required by 37 CFR 1.18(e). If patentee does not file a timely request for reconsideration of this PTA calculation, including the information required by 37 CFR 1.705(b)(2) and the fee required by 37 CFR 1.18(e), the USPTO will issue a certificate of correction reflecting the PTA determination noted above.

Patentee should be aware that in order to preserve the right of review of the USPTO's PTA determination in the United States District Court for the District of Columbia, patentee must ensure that the steps required under 35 U.S.C. § 154 (b)(4) are taken in a timely manner. Nothing in the request for recalculation should be construed as providing an alternative time frame for commencing a civil action under 35 U.S.C. § 154(b)(4).

UNITED STATES PATENT AND TRADEMARK OFFICE

Commissioner for Patents
United States Patent and Trademark Office
P.O. Box 1450
Alexandria, VA 22313-1450
www.uspto.gov

BRINKS HOFER GILSON & LIONE
P.O. BOX 10395
CHICAGO IL 60610

MAILED

NOV 23 2009

OFFICE OF PETITIONS

In re Application of :
Matsuda :
Application No. 10/978,729 : ON APPLICATION FOR
Filed: November 1, 2004 : PATENT TERM ADJUSTMENT
Atty Docket No. 9281-4943 :

This is in response to the REQUEST FOR RECONSIDERATION OF PATENT TERM ADJUSTMENT, filed August 7, 2009. Applicants submit that the patent term adjustment to be indicated on the patent is at minimum six hundred thirty-one (631) days, not two hundred eighty-five (285) days, as calculated by the Office as of the mailing of the initial determination of patent term adjustment. Applicants request this correction partly on the basis that the Office will take in excess of three years to issue this patent.

In addition, applicants state that, pursuant to 37 CFR 1.703(a)(1), a period of adjustment of 527 days, not 404 days, should be entered for Office delay in mailing an action under 35 U.S.C. 132 later than 14 months after the application's filing date pursuant to 35 U.S.C. 111(a). Applicants also impliedly dispute the period of reduction of 93 days for applicant delay entered for the filing of a response to a re-mailed Office action on August 10, 2007.

To the extent that applicants request reconsideration of the patent term adjustment as it relates to the Office's failure to issue the patent within 3 years of the filing date, the application for patent term adjustment under 37 CFR 1.705(b) is **DISMISSED as PREMATURE**.

Knowledge of the actual date the patent issues is required to calculate the amount, if any, of additional patent term patentees are entitled to for Office failure to issue the patent

within 3 years. See § 1.702(b). (This is true even where a request for continued examination (RCE) was filed). The computer will not undertake the § 1.702(b) calculation until the actual date of issuance of the patent has been determined. Likewise, the computer will not calculate any further Office delay under § 1.702(a)(4) or applicant delay under § 1.704(c)(10) until the actual date of issuance of the patent has been determined. As such, the Office cannot make a determination on the correctness of the patent term adjustment until the patent has issued.

Requesting reconsideration of the patent term adjustment to be indicated on the patent under 37 CFR 1.705(b) based on the initial determination of patent term adjustment and a projected issuance date of the patent (or even the filing date of the request for continued examination) is premature. Accordingly, it is appropriate to dismiss as premature such a request.

Rather than file an application for patent term adjustment under 37 CFR 1.705(b) contesting the 37 CFR 1.702(b) calculation at the time of the mailing of the notice of allowance, applicants are advised that they may wait until the time of the issuance of the patent and file a request for reconsideration of the patent term adjustment pursuant to 37 CFR 1.705(d). As the USPTO does not calculate the amount of time earned pursuant to 37 CFR 1.702(b) until the time of the issuance of the patent, the Office will consider any request for reconsideration of the patent term adjustment due to an error in the calculation of 37 CFR 1.702(b) to be timely if the request for reconsideration is filed within two months of the issuance of the patent. However, as to all other bases for contesting the initial determination of patent term adjustment received with the notice of allowance, applicants must timely file an application for patent term adjustment prior to the payment of the issue fee[1].

---

[1] For example, if applicant disputes both the calculation of patent term adjustment under 37 CFR 1.702(a)(1) for Office failure to mail a first Office action or notice of allowance not later than fourteen months after the date on which the application was filed and under 37 CFR 1.702(b) for Office failure to issue a patent within three years of the actual filing date of the application, then applicant must still timely file an application for patent term adjustment prior to the payment of the issue fee to contest the calculation of Office delay in issuing a first Office action or notice of allowance. See 37 CFR 1.705(b) and 35 U.S.C. 154(b)(3)(B). A dispute as to the calculation of the §1.702(a)(1) period raised on request for reconsideration of patent term adjustment under 37 CFR 1.705(d) will be dismissed as untimely filed.

To the extent that applicants otherwise request correction of the initial determination of patent term adjustment (PTA), the application for patent term adjustment is **GRANTED TO THE EXTENT INDICATED HEREIN**.

On May 7, 2009, the Office mailed the Determination of Patent Term Adjustment under 35 U.S.C. 154(b) in the above-identified application. The Notice stated that the patent term adjustment to date is 285 days. In response, applicants timely[2] filed the instant request for reconsideration of the patent term adjustment. Pursuant to applicants' authorization, deposit account no. 23-1925 is being charged the fee set forth in 37 C.F.R. § 1.18(e). No additional fees are required.

Applicants assert that the Office's delay pursuant to 37 C.F.R. § 1.703(a)(1) should be calculated as 527 days, not 404 days. Further, Applicants impliedly dispute the period of reduction of 93 days for applicant delay entered for the filing of a response to a re-mailed Office action on August 10, 2007.

The application history has been reviewed and it has been determined that the initial patent term adjustment of 285 days is incorrect. The Office mailed an Office action under § 132 on February 9, 2007, fourteen months and 404 days after the application was filed. The Office action was addressed to the correspondence address of record. On February 12, 2007, the Office action was returned to the Office for unknown reasons. On June 12, 2007, the Office action was re-mailed to applicants and the period for response was re-started from the mail date of the Office action. Applicants filed a response on August 10, 2007.

Applicants maintain that the non-final Office action mailed June 12, 2007 should be used in ascertaining examination delay under 37 CFR 1.702(a)(1).

Applicants' argument is not persuasive. On February 9, 2007, the Office issued an action as a result of the examination conducted pursuant to 35 U.S.C. 131. In this case, the subsequent mailing of another Office action does not alter the date used in calculation of the period of adjustment. The record reveals both Office actions were mailed to the correspondence address of record. The properly addressed Office

---

[2] PALM Records indicate that the Issue Fee payment was received on August 7, 2009.

action mailed February 9, 2007, was returned to the Office by the postal service. Accordingly, another copy of the Office action was mailed on June 12, 2007. The second Office action was received by applicants. It has not been shown that the re-mailing was due to any error on the part of the Office in mailing the first Office action to applicants. Thus, the re-mailing of the Office action did not constitute a delay by the Office in the issuance of the patent within the meaning of 35 U.S.C. 154(b). Accordingly, the period of examination delay was properly calculated based on the February 9, 2007 date.

However, the re-mailing of the Office action does impact the calculation of applicant delay in connection with the August 10, 2007 response. The examiner did re-mail the Office action of February 9, 2007 and restart the period for reply. When a period for reply is restarted by the Office, the restarted period for reply (and not the original period for reply) is the proper period to use in calculating applicant delay. Therefore, Applicants' August 10, 2007 response was filed within three months of the re-mailing of the Office action on June 12, 2007. As a result, no reduction pursuant to 37 CFR 1.704(b) is warranted in connection with the August 10, 2007 amendment and the 93 day period of reduction is being removed.

In view thereof, the correct determination of patent term adjustment at the time of the mailing of the notice of allowance is three hundred seventy-eight **(378)** days.

The Office of Data Management has been advised of this decision. The application is thereby forwarded to the Office of Data Management for issuance of the patent. The patent term adjustment indicated on the patent (as shown on the Issue Notification mailed about three weeks prior to patent issuance) will include any additional adjustment accrued both for Office delay in issuing the patent more than four months after payment of the issue fee and satisfaction of all outstanding requirements, and if applicable, for the Office taking in excess of three years to issue the patent.

Telephone inquiries specific to this matter should be directed to Shirene Willis Brantley, Senior Petitions Attorney, at (571) 272-3230.

Nancy Johnson
Senior Petitions Attorney
Office of Petitions

Enclosure: Copy of REVISED PAIR Screen

Day : Monday
Date: 11/9/2009

PALM INTRANET

Time: 17:01:12

PTA Calculations for Application: 10/978729			
Application Filing Date:	11/01/2004	PTO Delay (PTO):	440
Issue Date of Patent:		Three Years:	0
Pre-Issue Petitions:	0	Applicant Delay (APPL):	155
Post-Issue Petitions:	0	Total PTA (days):	378
PTO Delay Adjustment:	93		

File Contents History

Number	Date	Contents Description	PTO	APPL	START
66	11/09/2009	ADJUSTMENT OF PTA CALCULATION BY PTO	93		
58	05/07/2009	MAIL NOTICE OF ALLOWANCE			
57	05/06/2009	ISSUE REVISION COMPLETED			
56	05/06/2009	DOCUMENT VERIFICATION			
55	05/06/2009	NOTICE OF ALLOWANCE DATA VERIFICATION COMPLETED			
54	05/06/2009	EXAMINER'S AMENDMENT COMMUNICATION			
53	05/05/2009	NOTICE OF ALLOWABILITY			
52	05/01/2009	DATE FORWARDED TO EXAMINER			
51	04/30/2009	AMENDMENT SUBMITTED/ENTERED WITH FILING OF CPA/RCE			
50	05/01/2009	DATE FORWARDED TO EXAMINER			
49	04/30/2009	REQUEST FOR CONTINUED EXAMINATION (RCE)		21	42
48	05/01/2009	DISPOSAL FOR A RCE/CPA/129 (EXPRESS ABANDONMENT IF CPA)			
47	04/30/2009	WORKFLOW - REQUEST FOR RCE - BEGIN			
46	04/13/2009	MAIL ADVISORY ACTION (PTOL - 303)			
45	04/13/2009	ADVISORY ACTION (PTOL-303)			
44	04/08/2009	DATE FORWARDED TO EXAMINER			
43	03/13/2009	AMENDMENT AFTER FINAL REJECTION			
42	01/09/2009	MAIL FINAL REJECTION (PTOL - 326)	36		39
41	12/08/2008	FINAL REJECTION			
40	09/25/2008	DATE FORWARDED TO EXAMINER			
39	08/04/2008	RESPONSE AFTER NON-FINAL ACTION			
38	05/15/2008	MAIL NON-FINAL REJECTION			
37	05/14/2008	NON-FINAL REJECTION			

36	03/22/2008	DATE FORWARDED TO EXAMINER			
35	03/10/2008	AMENDMENT SUBMITTED/ENTERED WITH FILING OF CPA/RCE			
34	03/22/2008	DATE FORWARDED TO EXAMINER			
33	03/10/2008	REQUEST FOR CONTINUED EXAMINATION (RCE)		41	29
32	03/22/2008	DISPOSAL FOR A RCE/CPA/129 (EXPRESS ABANDONMENT IF CPA)			
31	03/10/2008	REQUEST FOR EXTENSION OF TIME - GRANTED			
30	03/10/2008	WORKFLOW - REQUEST FOR RCE - BEGIN			
29	10/29/2007	MAIL FINAL REJECTION (PTOL - 326)			
28	10/25/2007	FINAL REJECTION			
27	08/14/2007	DATE FORWARDED TO EXAMINER			
26	08/10/2007	RESPONSE AFTER NON-FINAL ACTION		93	23
25	06/12/2007	MAIL NOTICE OF RESTARTED RESPONSE PERIOD			
24	06/08/2007	LETTER RESTARTING PERIOD FOR RESPONSE (I.E. LETTER RE: REFERENCES)			
23	02/09/2007	MAIL NON-FINAL REJECTION	404		-1
22	02/05/2007	NON-FINAL REJECTION			
21	02/05/2007	CASE DOCKETED TO EXAMINER IN GAU			
20	11/01/2004	INFORMATION DISCLOSURE STATEMENT CONSIDERED			
19	03/31/2005	INFORMATION DISCLOSURE STATEMENT CONSIDERED			
18	01/11/2007	CASE DOCKETED TO EXAMINER IN GAU			
17	07/13/2006	MISCELLANEOUS INCOMING LETTER			
16	03/31/2005	REFERENCE CAPTURE ON IDS			
15.7	03/31/2005	INFORMATION DISCLOSURE STATEMENT (IDS) FILED			
15	03/31/2005	INFORMATION DISCLOSURE STATEMENT (IDS) FILED			
14	02/09/2005	IFW TSS PROCESSING BY TECH CENTER COMPLETE			
13	02/09/2005	CASE DOCKETED TO EXAMINER IN GAU			
12	11/01/2004	REQUEST FOR FOREIGN PRIORITY (PRIORITY PAPERS MAY BE INCLUDED)			
11	11/01/2004	REFERENCE CAPTURE ON IDS			
10.7	11/01/2004	INFORMATION DISCLOSURE STATEMENT (IDS) FILED			

10	11/01/2004	INFORMATION DISCLOSURE STATEMENT (IDS) FILED			
9	11/01/2004	PRELIMINARY AMENDMENT			
8	12/13/2004	APPLICATION RETURN FROM OIPE			
7	12/13/2004	APPLICATION RETURN TO OIPE			
6	12/13/2004	APPLICATION DISPATCHED FROM OIPE			
5	12/14/2004	APPLICATION IS NOW COMPLETE			
4	12/06/2004	CLEARED BY OIPE CSR			
3	12/06/2004	CASE CLASSIFIED BY OIPE			
2	11/16/2004	IFW SCAN & PACR AUTO SECURITY REVIEW			
1	11/01/2004	INITIAL EXAM TEAM NN			

Search Another: Application# Search

EXPLANATION OF PTA CALCULATION

EXPLANATION OF PTE CALCULATION

To go back, right click here and select Back. To go forward, right click here and select Forward. To refresh, right click here and select Refresh.

Back to OASIS | Home page

UNITED STATES PATENT AND TRADEMARK OFFICE

UNITED STATES DEPARTMENT OF COMMERCE
United States Patent and Trademark Office
Address: COMMISSIONER FOR PATENTS
P.O. Box 1450
Alexandria, Virginia 22313-1450
www.uspto.gov

BRINKS HOFER GILSON & LIONE
P.O. BOX 10395
CHICAGO, IL 60610

Mail Date: 04/21/2010

Applicant	: Shoji Matsuda	: DECISION ON REQUEST FOR
Patent Number	: 7638981	: RECALCULATION of PATENT
Issue Date	: 12/29/2009	: TERM ADJUSTMENT IN VIEW
Appliction No	: 10/978,729	: OF WYETH AND NOTICE OF INTENT TO
Filed	: 11/01/2004	: ISSUE CERTIFICATE OF CORRECTION
		:

The Request for Recalculation is **GRANTED** to the extent indicated.

The patent term adjustment has been determined to be **622** days. The USPTO will *sua sponte* issue a certificate of correction reflecting the amount of PTA days determined by the recalculation.

Prior to the issuance of the certificate of correction, the USPTO will afford patentee an opportunity to be heard and request reconsideration. Accordingly, patentee has **one month or thirty (30) days**, whichever is longer, to file a request for reconsideration of this patent term adjustment calculation. See 35 U.S.C. 154(b)(3)(B)(ii) and 37 CFR 1.322(a)(4). No extensions of time will be granted under 37 CFR 1.136.

Patentee should use document code PET.OP if electronically filing a request for reconsideration of this patent term adjustment calculation. The patentee must also include the information required by 37 CFR 1.705(b)(2) and the fee required by 37 CFR 1.18(e). If patentee does not file a timely request for reconsideration of this patent term adjustment calculation including the information required by 37 CFR 1.705(b)(2) and the fee required by 37 CFR 1.18(e), the USPTO will issue a certificate of correction reflecting the PTA determination noted above.

Patentee should be aware that in order to preserve the right to review in the United States District Court for the District of Columbia of the USPTO patent term adjustment determination, patentee must ensure that he or she also take the steps required under 35 U.S.C. 154(b)(4)(A) in a timely manner. Nothing in the request for recalculation should be construed as providing an alternative time frame for commencing a civil action under 35 U.S.C. 154(b)(4)(A).

Any questions concerning this decision should be directed to the Office of Patent Legal Administration at 571-272-7702.

SPE RESPONSE FOR CERTIFICATE OF CORRECTION

Paper No.: ____

DATE : 3/12/07

TO SPE OF : ART UNIT 2818

SUBJECT : Request for Certificate of Correction for Appl. No.: 10/978732 Patent No.: 7119328B2

Please respond to this request for a certificate of correction within 7 days.

Please review the requested changes/corrections as shown in the **COCIN** document(s) in the IFW application image. No new matter should be introduced, nor should the scope or meaning of the claims be changed.

Please complete the response (see below) and forward the completed response to scanning using document code **COCX**.

Virginia Tolbert
Certificates of Correction Branch

703-308-9390 ext. 113

Thank You For Your Assistance

The request for issuing the above-identified correction(s) is hereby:
Note your decision on the appropriate box.

- ☑ **Approved** — **All** changes apply.
- ☐ **Approved in Part** — Specify below which changes **do not** apply.
- ☐ **Denied** — State the reasons for denial below.

Comments: _____

Steven Loke
SPE

2818
Art Unit

SPE RESPONSE FOR CERTIFICATE OF CORRECTION

DATE : 4/9/10 Paper No.: —

TO SPE OF : ART UNIT 2818

SUBJECT : Request for Certificate of Correction for Appl. No.: 10/978732 Patent No.: 7119378B2

Please respond to this request for a certificate of correction within 7 days.

FOR IFW FILES:

Please review the requested changes/corrections as shown in the **COCIN** document(s) in the IFW application image. No new matter should be introduced, nor should the scope or meaning of the claims be changed.

Please complete the response (see below) and forward the completed response to scanning using document code **COCX**.

FOR PAPER FILES:

Please review the requested changes/corrections as shown in the attached certificate of correction. Please complete this form (see below) and forward it with the file to:

Certificates of Correction Branch (CofC)
Randolph Square – 9D10-A
Palm Location 7580

Virginia Tolbert
Certificates of Correction Branch
571-272-0460

Thank You For Your Assistance

The request for issuing the above-identified correction(s) is hereby:
Note your decision on the appropriate box.

- ☒ **Approved** — All changes apply.
- ☐ **Approved in Part** — Specify below which changes **do not** apply.
- ☐ **Denied** — State the reasons for denial below.

Comments: _____

Steven Loke, SPE AU 2818

UNITED STATES PATENT AND TRADEMARK OFFICE

Commissioner for Patents
United States Patent and Trademark Office
P.O. Box 1450
Alexandria, VA 22313-1450
www.uspto.gov

CHIH-CHING HSIEH
235 CHUNG – HO
BOX 8-24
TAICHUNG HSIEN, TAIPEI TW TAIWAN

COPY MAILED

APR 0 3 2008

OFFICE OF PETITIONS

In re Application of :
Chih-Ching Hsieh :
Application No. 10/978,751 :
Filed: November 2, 2004 :
Attorney Docket No. J5P4079-GFP-932790 :

ON PETITION

This is a decision on the petition under 37 CFR 1.137(b), filed November 6, 2007 and resubmitted on November 15, 2007, to revive the above-identified application.

The petition is **DISMISSED.**

Any request for reconsideration of this decision must be submitted within TWO (2) MONTHS from the mail date of this decision. Extensions of time under 37 CFR 1.136(a) are permitted. The reconsideration request should include a cover letter entitled "**Renewed Petition under 37 CFR 1.137(b)**." This is **not** final agency action within the meaning of 5 U.S.C. § 704.

A grantable petition under 37 CFR 1.137(b) must be accompanied by: (1) the required reply, unless previously filed; (2) the petition fee as set forth in 37 CFR 1.17(m); (3) a statement that the entire delay in filing the required reply from the due date for the reply until the filing of a grantable petition pursuant to 37 CFR 1.137(b) was unintentional; and (4) any terminal disclaimer (and fee as set forth in 37 CFR 1.20(d)) required by 37 CFR 1.137(c). Where there is a question as to whether either the abandonment or the delay in filing a petition under 37 CFR 1.137 was unintentional, the Commissioner may require additional information. See MPEP 711.03(c)(III)(C) and (D). The instant petition lack(s) item(s) (2).

The $770 petition under 37 CFR 1.137(b) fee has not been received. This petition can not be revive until the $770 outstanding balance is received.

Further correspondence with respect to this matter should be addressed as follows:

By mail: Mail Stop PETITION
Commissioner for Patents
Post Office Box 1450
Alexandria, VA 22313-1450

By hand: Customer Service Window
Randolph Building
401 Dulany Street
Alexandria, VA 22314

By facsimile: (571) 273-8300
ATTN: Office of Petitions

Telephone inquiries concerning this decision should be directed to the undersigned at (571) 272-3210.

Irvin Dingle
Petitions Examiner
Office of Petitions

UNITED STATES PATENT AND TRADEMARK OFFICE

Commissioner for Patents
United States Patent and Trademark Office
P.O. Box 1450
Alexandria, VA 22313-1450
www.uspto.gov

CHIH-CHING HSIEH
235 CHUNG – HO
BOX 8-24
TAICHUNG HSIEN, TAIPEI TW TAIWAN

COPY MAILED

SEP 12 2008

OFFICE OF PETITIONS

In re Application of	:	
Chih-Ching Hsieh	:	
Application No. 10/978,751	:	ON PETITION
Filed: November 2, 2004	:	
Attorney Docket No. J5P4079-GFP-932790	:	

This is a decision on the renewed petition under 37 CFR 1.137(b), filed May 16, 2008, to revive the above-identified application.

The petition is **GRANTED**.

Telephone inquiries concerning this decision should be directed to Irvin Dingle at (571) 272-3210.

This matter is being referred to Technology Center AU 3723 for further processing.

Irvin Dingle
Petitions Examiner
Office of Petitions

UNITED STATES PATENT AND TRADEMARK OFFICE

Commissioner for Patents
United States Patent and Trademark Office
P.O. Box 1450
Alexandria, VA 22313-1450
www.uspto.gov

BRIAN M. MCINNIS
12TH FLOOR, RUTTONJEE HOUSE
11 DUDDELL STREET
HONG KONG HK HONG KONG

MAILED

MAR 05 2010

OFFICE OF PETITIONS

In re Application of :
Chih-Ching Hsieh :
Application No. 10/978,751 : ON PETITION
Filed: November 2, 2004 :
Attorney Docket No. J5P4079-GFP-932790 :

This is a decision on the petition under 37 CFR 1.137(b), filed October 27, 2009, to revive the above-identified application.

The petition is **DISMISSED.**

Any request for reconsideration of this decision must be submitted within TWO (2) MONTHS from the mail date of this decision. Extensions of time under 37 CFR 1.136(a) are permitted. The reconsideration request should include a cover letter entitled "**Renewed Petition under 37 CFR 1.137(b)**." This is **not** final agency action within the meaning of 5 U.S.C. § 704.

A grantable petition under 37 CFR 1.137(b) must be accompanied by: (1) the required reply, unless previously filed; (2) the petition fee as set forth in 37 CFR 1.17(m); (3) a statement that the entire delay in filing the required reply from the due date for the reply until the filing of a grantable petition pursuant to 37 CFR 1.137(b) was unintentional; and (4) any terminal disclaimer (and fee as set forth in 37 CFR 1.20(d)) required by 37 CFR 1.137(c). Where there is a question as to whether either the abandonment or the delay in filing a petition under 37 CFR 1.137 was unintentional, the Commissioner may require additional information. See MPEP 711.03(c)(III)(C) and (D). The instant petition lack(s) item(s) (1).

The application became abandoned for failure to timely file a reply within the meaning of 37 CFR 1.113 to the final Office action of October 15, 2008. The proposed reply required for consideration of a petition to revive must be a Notice of Appeal (and appeal fee required by 37 CFR 41.20(b)(2)), an amendment that *prima facie* places the application in condition for allowance, a Request for Continued Examination (RCE) and submission (37 CFR 1.114), or the filing of a continuing application under 37 CFR 1.53(b). *See* MPEP 711.03(c)(III)(A)(2). Since the amendment submitted does not *prima facie* place the application in condition for allowance, the reply required must be a Notice of Appeal (and appeal fee), RCE, or the filing of a continuing application under 37 CFR 1.53(b).

Further correspondence with respect to this matter should be addressed as follows:

By mail: Mail Stop PETITION
Commissioner for Patents
Post Office Box 1450
Alexandria, VA 22313-1450

By hand: Customer Service Window
Randolph Building
401 Dulany Street
Alexandria, VA 22314

By facsimile: (571) 273-8300
ATTN: Office of Petitions

Telephone inquiries concerning this decision should be directed to the undersigned at (571) 272-3210.

Irvin Dingle
Petitions Examiner
Office of Petitions

Attachment: Advisory Action

Advisory Action Before the Filing of an Appeal Brief	Application No. 10/978,751	Applicant(s) HSIEH, CHIH-CHING	
	Examiner D. S. Meislin	Art Unit 3727	

--The MAILING DATE of this communication appears on the cover sheet with the correspondence address --

THE REPLY FILED 27 October 2009 FAILS TO PLACE THIS APPLICATION IN CONDITION FOR ALLOWANCE.

1. ☒ The reply was filed after a final rejection, but prior to or on the same day as filing a Notice of Appeal. To avoid abandonment of this application, applicant must timely file one of the following replies: (1) an amendment, affidavit, or other evidence, which places the application in condition for allowance; (2) a Notice of Appeal (with appeal fee) in compliance with 37 CFR 41.31; or (3) a Request for Continued Examination (RCE) in compliance with 37 CFR 1.114. The reply must be filed within one of the following time periods:
   a) ☐ The period for reply expires _____months from the mailing date of the final rejection.
   b) ☒ The period for reply expires on: (1) the mailing date of this Advisory Action, or (2) the date set forth in the final rejection, whichever is later. In no event, however, will the statutory period for reply expire later than SIX MONTHS from the mailing date of the final rejection.
   Examiner Note: If box 1 is checked, check either box (a) or (b). ONLY CHECK BOX (b) WHEN THE FIRST REPLY WAS FILED WITHIN TWO MONTHS OF THE FINAL REJECTION. See MPEP 706.07(f).

Extensions of time may be obtained under 37 CFR 1.136(a). The date on which the petition under 37 CFR 1.136(a) and the appropriate extension fee have been filed is the date for purposes of determining the period of extension and the corresponding amount of the fee. The appropriate extension fee under 37 CFR 1.17(a) is calculated from: (1) the expiration date of the shortened statutory period for reply originally set in the final Office action; or (2) as set forth in (b) above, if checked. Any reply received by the Office later than three months after the mailing date of the final rejection, even if timely filed, may reduce any earned patent term adjustment. See 37 CFR 1.704(b).

NOTICE OF APPEAL

2. ☐ The Notice of Appeal was filed on _____. A brief in compliance with 37 CFR 41.37 must be filed within two months of the date of filing the Notice of Appeal (37 CFR 41.37(a)), or any extension thereof (37 CFR 41.37(e)), to avoid dismissal of the appeal. Since a Notice of Appeal has been filed, any reply must be filed within the time period set forth in 37 CFR 41.37(a).

AMENDMENTS

3. ☒ The proposed amendment(s) filed after a final rejection, but prior to the date of filing a brief, will not be entered because
   (a) ☒ They raise new issues that would require further consideration and/or search (see NOTE below);
   (b) ☐ They raise the issue of new matter (see NOTE below);
   (c) ☒ They are not deemed to place the application in better form for appeal by materially reducing or simplifying the issues for appeal; and/or
   (d) ☐ They present additional claims without canceling a corresponding number of finally rejected claims.
   NOTE: *the amended subject matter constitutes new issues requiring further consideration and/or search*. (See 37 CFR 1.116 and 41.33(a)).
4. ☐ The amendments are not in compliance with 37 CFR 1.121. See attached Notice of Non-Compliant Amendment (PTOL-324).
5. ☐ Applicant's reply has overcome the following rejection(s): _____.
6. ☐ Newly proposed or amended claim(s) _____ would be allowable if submitted in a separate, timely filed amendment canceling the non-allowable claim(s).
7. ☒ For purposes of appeal, the proposed amendment(s): a) ☒ will not be entered, or b) ☐ will be entered and an explanation of how the new or amended claims would be rejected is provided below or appended.
   The status of the claim(s) is (or will be) as follows:
   Claim(s) allowed: _____.
   Claim(s) objected to: _____.
   Claim(s) rejected: *1,3,4 and 6*.
   Claim(s) withdrawn from consideration: _____.

AFFIDAVIT OR OTHER EVIDENCE

8. ☐ The affidavit or other evidence filed after a final action, but before or on the date of filing a Notice of Appeal will not be entered because applicant failed to provide a showing of good and sufficient reasons why the affidavit or other evidence is necessary and was not earlier presented. See 37 CFR 1.116(e).
9. ☐ The affidavit or other evidence filed after the date of filing a Notice of Appeal, but prior to the date of filing a brief, will not be entered because the affidavit or other evidence failed to overcome all rejections under appeal and/or appellant fails to provide a showing a good and sufficient reasons why it is necessary and was not earlier presented. See 37 CFR 41.33(d)(1).
10. ☐ The affidavit or other evidence is entered. An explanation of the status of the claims after entry is below or attached.

REQUEST FOR RECONSIDERATION/OTHER

11. ☐ The request for reconsideration has been considered but does NOT place the application in condition for allowance because: _____.
12. ☐ Note the attached Information *Disclosure Statement*(s). (PTO/SB/08) Paper No(s). _____
13. ☐ Other: _____.

/D. S Meislin/
Primary Examiner
Art Unit: 3727

UNITED STATES PATENT AND TRADEMARK OFFICE

UNITED STATES DEPARTMENT OF COMMERCE
United States Patent and Trademark Office
Address: COMMISSIONER FOR PATENTS
P.O. Box 1450
Alexandria, Virginia 22313-1450
www.uspto.gov

APPLICATION NUMBER	FILING OR 371(C) DATE	FIRST NAMED APPLICANT	ATTY. DOCKET NO./TITLE
10/978,751	11/02/2004	Chih-Ching Hsieh	J5P4079-GFP-932790

CONFIRMATION NO. 2665

POWER OF ATTORNEY NOTICE

Chih-Ching HSIEH
235 Chung - Ho
Box 8-24
Taichung Hsien, Taipei,
TAIWAN

OC000000040402547

Date Mailed: 03/04/2010

NOTICE REGARDING CHANGE OF POWER OF ATTORNEY

This is in response to the Power of Attorney filed 10/27/2009.

- The Power of Attorney to you in this application has been revoked by the applicant. Future correspondence will be mailed to the new address of record(37 CFR 1.33).

/idingle/

Office of Data Management, Application Assistance Unit (571) 272-4000, or (571) 272-4200, or 1-888-786-0101

UNITED STATES PATENT AND TRADEMARK OFFICE

UNITED STATES DEPARTMENT OF COMMERCE
United States Patent and Trademark Office
Address: COMMISSIONER FOR PATENTS
P.O. Box 1450
Alexandria, Virginia 22313-1450
www.uspto.gov

APPLICATION NUMBER	FILING OR 371(C) DATE	FIRST NAMED APPLICANT	ATTY. DOCKET NO./TITLE
10/978,751	11/02/2004	Chih-Ching Hsieh	J5P4079-GFP-932790

CONFIRMATION NO. 2665

POA ACCEPTANCE LETTER

OC000000040402625

60589
BRIAN M. MCINNIS
12th Floor, Ruttonjee House
11 Duddell Street
Hong Kong,
HONG KONG

Date Mailed: 03/04/2010

NOTICE OF ACCEPTANCE OF POWER OF ATTORNEY

This is in response to the Power of Attorney filed 10/27/2009.

The Power of Attorney in this application is accepted. Correspondence in this application will be mailed to the above address as provided by 37 CFR 1.33.

/idingle/

Office of Data Management, Application Assistance Unit (571) 272-4000, or (571) 272-4200, or 1-888-786-0101

UNITED STATES PATENT AND TRADEMARK OFFICE

Commissioner for Patents
United States Patent and Trademark Office
P.O. Box 1450
Alexandria, VA 22313-1450
www.uspto.gov

LEE & HAYES, PLLC
601 W. RIVERSIDE AVENUE
SUITE 1400
SPOKANE WA 99201

COPY MAILED

MAR 2 0 2009

OFFICE OF PETITIONS

In re Application of	:	
Hansen et al.	:	
Application No. 10/978,778	:	ON PETITION
Filed: November 1, 2004	:	
Attorney Docket No. META007US0	:	

This is a decision on the petition under 37 C.F.R. § 1.137(b), filed December 3, 2008, to revive the above-identified application.

The petition is **GRANTED**.

The petition satisfies the requirements of 37 CFR 1.137(b) in that petitioner has supplied (1) the reply in the form of the Issue Fee Transmittal with payment of the issue and publication fees, (2) the petition fee, and (3) a proper statement of unintentional delay.

As reflected above, the Change of Correspondence Address filed concurrently has been entered.

Telephone inquiries concerning this decision should be directed to the undersigned at (571) 272-3206.

This matter is being referred to the Office of Data Management for processing into a patent.

Liana Walsh
Petitions Examiner
Office of Petitions

UNITED STATES PATENT AND TRADEMARK OFFICE

Commissioner for Patents
United States Patent and Trademark Office
P.O. Box 1450
Alexandria, VA 22313-1450
www.uspto.gov

KNOBBE MARTENS OLSON & BEAR LLP
2040 MAIN STREET
FOURTEENTH FLOOR
IRVINE, CA 92614

COPY MAILED

OCT 20 2006

OFFICE OF PETITIONS

In re Application of	:	
TAKAIWA, et al.	:	
Application No. 10/978,798	:	DECISION GRANTING PETITION
Filed: November 01, 2004	:	UNDER 37 CFR 1.313(c)(2)
Attorney Docket No. SHIMZ1.001AUS	:	

This is a decision on the petition under 37 CFR 1.313(c)(2), filed September 25, 2006, to withdraw the above-identified application from issue after payment of the issue fee.

The petition is **GRANTED**.

The above-identified application is withdrawn from issue for consideration of a submission under 37 CFR 1.114 (request for continued examination). *See* 37 CFR 1.313(c)(2).

Petitioner is advised that the issue fee paid on September 11, 2006 cannot be refunded. If, however, this application is again allowed, petitioner may request that it be applied towards the issue fee required by the new Notice of Allowance.[1]

Telephone inquiries regarding this decision should be directed to Patricia Volpe at 571-272-6825.

This application is being referred to Technology Center AU 1638 for processing of the request for continued examination under 37 CFR 1.114 and for consideration of the concurrently filed Information Disclosure Statement.

Frances Hicks
Petitions Examiner
Office of Petitions

---

[1] *The request to apply the issue fee to the new Notice may be satisfied by completing and returning the new Part B – Fee(s) Transmittal Form (along with any balance due at the time of submission). Petitioner is advised that the Issue Fee Transmittal Form must be completed and timely submitted to avoid abandonment of the application.*

UNITED STATES PATENT AND TRADEMARK OFFICE

Commissioner for Patents
United States Patent and Trademark Office
P.O. Box 1450
Alexandria, VA 22313-1450
www.uspto.gov

MAILED FROM
DIRECTORS OFFICE
JUN 28 2007
TECHNOLOGY CENTER 2800

BUCHANAN, INGERSOLL & ROONEY PC
POST OFFICE BOX 1404
ALEXANDRIA VA 22313-1404

In re Application of:
Joon-seop KWAK et al.
Serial No.: 10/978,811
Filed: November 2, 2004
For: Electrode Layer, Light Emitting Device Including the same, and Method of Forming the Electrode Layer

DECISION ON PETITION

This is a decision on the petition under 37 C.F.R. § 1.181, filed April 30, 2007, to re-mail the non-final Office action of December 14, 2006.

The petition is GRANTED.

A non-final Office action was mailed on December 14, 2006, setting a three-month period of response.

Petitioner asserts that the non-final Office action was not received. To support this assertion, petitioner states that a Patent Application Information Retrieval (PAIR) search for this application determined that an Office action was mailed on December 14, 2006 and was returned to the U.S. Patent and Trademark Office on December 18, 2006. Petitioner further states a search of the file jacket and docket records indicates that the Office action was not received in their Offices. Petitioner also attached a print out from the firm's docket system for this specific application indicating that the Office action was not received. In addition, a global docket report for the day a response would have been marked as due had the Office action been received was also attached.

A review of the written record indicates that the non-final Office action was returned undelivered by the US Postal Service on December 18, 2006. The record does not indicate that the non-final Office action was re-mailed pursuant to MPEP § 707.13.

MPEP § 707.13 states the Office policy with regards to returned Office actions. Office actions are sometimes returned to the Office because the United States Postal Service has not been able to deliver them. The examiner should use every reasonable means to ascertain the correct address and forward the action again, after stamping it "remailed" with the date thereof and redirecting it if there is any reason to believe that the action would reach applicant at such new address. If the

Office action was addressed to an attorney, a letter may be written to the inventor or assignee informing him or her of the returned action. The period running against the application begins with the date of remailing. *Ex parte Gourtoff*, 1924 C.D. 153, 329 O.G. 536 (Comm'r Pat. 1924).

For the above reasons, the non-final Office action was not received at the correspondence address and will be re-mailed. The shorten statutory period for response set therein will be reset to run from the date the Office action is remailed. Extensions of time are available under 37 CFR § 1.136.

Any inquiry regarding this decision should be directed to Jose' G. Dees, Special Program Examiner, at (571) 272-1569.

Robert Oberleitner, Group Director
Technology Center 2800
Semiconductors, Electrical and Optical
Systems and Components

UNITED STATES PATENT AND TRADEMARK OFFICE

COMMISSIONER FOR PATENTS
UNITED STATES PATENT AND TRADEMARK OFFICE
P.O. BOX 1450
ALEXANDRIA, VA 22313-1450
www.uspto.gov

NIXON & VANDERHYE, PC
901 NORTH GLEBE ROAD, 11TH FLOOR
ARLINGTON, VA 22203

COPY MAILED

JUL 29 2005

OFFICE OF PETITIONS

In re Application of	:
Mrstik, et al.	: DECISION GRANTING STATUS
Application No. 10/978,823	: UNDER 37 CFR 1.47(a)
Filed: November 2, 2004	:
Atty. Dkt. No.: 2239-20	:
For: INFLATABLE-COLLAPSIBLE	:
TRANSREFLECTOR ANTENNA	:

This decision is in response to the petition under 37 CFR 1.47(a) filed April 18, 2005.

The petition under 37 CFR 1.47(a) is **GRANTED**.

Petitioners have shown that inventor A. Vincent Mrstik has refused to execute the declaration for the above-identified application after having been presented with the application papers.

The above-identified application and papers have been reviewed and found in compliance with 37 CFR 1.47(a). This application is hereby accorded Rule 1.47(a) status.

As provided in Rule 1.47(c), this Office will forward notice of this application's filing to the non-signing inventors at the addresses given in the petition. Notice of the filing of this application will also be published in the Official Gazette.

After this decision is mailed, the above-identified application will be returned to the Office of Initial Patent Examination for further processing.

Telephone inquiries regarding this decision should be directed to the undersigned at (571) 272-3205.

Alesia M. Brown
Petitions Attorney
Office of Petitions

UNITED STATES PATENT AND TRADEMARK OFFICE

COMMISSIONER FOR PATENTS
UNITED STATES PATENT AND TRADEMARK OFFICE
P.O. BOX 1450
ALEXANDRIA, VA 22313-1450
www.uspto.go

A. VINCENT MRSTIK
201 RAMETTO ROAD
SANTA BARBARA, CA 93108

COPY MAILED
JUL 29 2005
OFFICE OF PETITIONS

In re Application of	:	
Mrstik, et al.	:	
Application No. 10/978,823	:	LETTER
Filed: November 2, 2004	:	
Atty. Dkt. No.: 2239-20	:	
For: INFLATABLE-COLLAPSIBLE	:	
TRANSREFLECTOR ANTENNA	:	

Dear Sir:

You are named as an inventor in the above-identified United States patent application filed under the provisions of 35 U.S.C. 116 (United States Code) and 37 C.F.R. § 1.47(a), Rules of Practice in Patent Cases. Should a patent be granted on the application you will be designated therein as a joint inventor.

As a named inventor you are entitled to inspect any paper in the file wrapper of the application, order copies of all or any part thereof (at a prepaid cost as per 37 C.F.R. § 1.19) or make your position of record in the application. Alternatively, you may arrange to do any of the preceding through a registered patent attorney or agent presenting written authorization from you. If you care to join the application, counsel of record (see below) would presumably assist you. Joining in the application would entail the filing of an appropriate oath or declaration by you pursuant to 37 C.F.R. § 1.63.

Telephone inquiries regarding this communication should be directed to the undersigned at (571) 272-3205. Requests for information regarding your application should be directed to the File Information Unit at (703) 308-2733. Information regarding how to pay for and order a copy of the application, or a specific paper in the application, should be directed to Certification Division at (703) 308-9726 or 1-800-972-6382 (outside the Washington D.C. area).

Telephone inquiries regarding this matter should be directed to the undersigned at (571) 272-3205.

Alesia M. Brown
Petitions Attorney
Office of Petitions

UNITED STATES PATENT AND TRADEMARK OFFICE

UNITED STATES DEPARTMENT OF COMMERCE
United States Patent and Trademark Office
Address: COMMISSIONER FOR PATENTS
P.O. Box 1450
Alexandria, Virginia 22313-1450
www.uspto.gov

JONES DAY
222 EAST 41ST ST
NEW YORK, NY 10017

Mail Date: 04/21/2010

Applicant	: Sophie Rebecca Raven	: DECISION ON REQUEST FOR
Patent Number	: 7635348	: RECALCULATION of PATENT
Issue Date	: 12/22/2009	: TERM ADJUSTMENT IN VIEW
Appliction No	: 10/978,827	: OF WYETH AND NOTICE OF INTENT TO
Filed	: 11/02/2004	: ISSUE CERTIFICATE OF CORRECTION
		:

The Request for Recalculation is **GRANTED** to the extent indicated.

The patent term adjustment has been determined to be **731** days. The USPTO will *sua sponte* issue a certificate of correction reflecting the amount of PTA days determined by the recalculation.

Prior to the issuance of the certificate of correction, the USPTO will afford patentee an opportunity to be heard and request reconsideration. Accordingly, patentee has **one month or thirty (30) days**, whichever is longer, to file a request for reconsideration of this patent term adjustment calculation. See 35 U.S.C. 154(b)(3)(B)(ii) and 37 CFR 1.322(a)(4). No extensions of time will be granted under 37 CFR 1.136.

Patentee should use document code PET.OP if electronically filing a request for reconsideration of this patent term adjustment calculation. The patentee must also include the information required by 37 CFR 1.705(b)(2) and the fee required by 37 CFR 1.18(e). If patentee does not file a timely request for reconsideration of this patent term adjustment calculation including the information required by 37 CFR 1.705(b)(2) and the fee required by 37 CFR 1.18(e), the USPTO will issue a certificate of correction reflecting the PTA determination noted above.

Patentee should be aware that in order to preserve the right to review in the United States District Court for the District of Columbia of the USPTO patent term adjustment determination, patentee must ensure that he or she also take the steps required under 35 U.S.C. 154(b)(4)(A) in a timely manner. Nothing in the request for recalculation should be construed as providing an alternative time frame for commencing a civil action under 35 U.S.C. 154(b)(4)(A).

Any questions concerning this decision should be directed to the Office of Patent Legal Administration at 571-272-7702.

UNITED STATES PATENT AND TRADEMARK OFFICE

Commissioner for Patents
United States Patent and Trademark Office
P.O. Box 1450
Alexandria, VA 22313-1450
www.uspto.gov

FOLEY & LARDNER
777 EAST WISCONSIN AVENUE
SUITE 3800
MILWAUKEE WI 53202-5308

COPY MAILED

JUN 1 7 2005

OFFICE OF PETITIONS

In re Application of
Wojcik et al.
Application No. 10/978,831
Filed: November 1, 2004
Title: Chafer Rack

DECISION ACCORDING STATUS
UNDER 37 CFR 1.47(a)

This is in response to the petition under 37 CFR 1.47(a),[1] filed on April 6, 2005. Applicants obtained an extension of time for response within the third month. Accordingly, the petition is timely filed.

The petition is granted.

Petitioner has shown that Ronnie I . Matteucci, the non-signing inventor, has refused to join in the filing of the above-identified application after having been mailed the application papers. Specifically, the statement of facts of Sean P. Connolly establishes that applicants mailed the application papers, including the specification, claims and drawings by certified mail, return receipt requested to the last known address of the non-signing inventor. Jenni Matteucci signed the return receipt. A copy of the letter to the non-signing inventor and the return receipt accompany the petition.

The above-identified application and papers have been reviewed and found in compliance with 37 CFR 1.47(a). This application is hereby accorded Rule 1.47(a) status. As provided in Rule 1.47(c), this Office will forward notice of this application's filing to the non-signing inventor at the address given in the present petition. Notice of the filing of this application will also be published in the Official Gazette.

Applicants submitted a petition fee of $130.00. As of December 8, 2004, the petition fee increased to $200.00. Therefore, Deposit Account No. 06-1447 will be charged the amount due of $70.00.

The matter is being referred to Technology Center Art Unit 1761for examination in due course.

[1] On June 6, 2005, applicants submitted a copy of the declaration signed by Richard A. Nelipovich. Mr. Nelipovich had not signed the declaration as of the date applicants filed the present petition.

Telephone inquiries regarding this decision should be directed to the undersigned at (571) 272-3211.

Christina Tartera Donnell

Christina Tartera Donnell
Senior Petitions Attorney
Office of Petitions

UNITED STATES PATENT AND TRADEMARK OFFICE

Commissioner for Patents
United States Patent and Trademark Office
P.O. Box 1450
Alexandria, VA 22313-1450
www.uspto.gov

Ronnie I. Matteucci
W241 N2559 E. Parkway Meadow Cir. #7
Pewaukee, WI 53072-5862

COPY MAILED

JUN 17 2005

OFFICE OF PETITIONS

In re Application of :
Wojcik et al. : LETTER
Application No. 10/978,831 :
Filed: November 1, 2004 :
Title: Chafer Rack :

Dear Mr. Matteucci:

You are named as a joint inventor in the above-identified United States patent application filed under the provisions of 35 U.S.C. 116 (United States Code) and 37 CFR 1.47(a), Rules of Practice in Patent Cases. Should a patent be granted on the application you will be designated therein as a joint inventor.

As a named inventor you are entitled to inspect any paper in the file wrapper of the application, order copies of all or any part thereof (at a prepaid cost per 37 CFR 1.19) or make your position of record in the application. Alternatively, you may arrange to do any of the preceding through a registered patent attorney or agent presenting written authorization from you. If you care to join the application, counsel of record (see below) would presumably assist you. Joining in the application would entail the filing of an appropriate oath or declaration by you pursuant to 37 CFR 1.63.

Requests for information regarding your application should be directed to the File Information Unit at (703) 308-2733. Information regarding how to pay for and order a copy of the application, or a specific paper in the application, should be directed to Certification Division at (703) 308-9726 or 1-800-972-6382 (outside the Washington D.C. area).

Christina T. Donnell

Christina Tartera Donnell
Senior Petitions Attorney
Office of Petitions

FOLEY & LARDNER
777 EAST WISCONSIN AVENUE
SUITE 3800
MILWAUKEE WI 53202-5308

UNITED STATES PATENT AND TRADEMARK OFFICE

COMMISSIONER FOR PATENTS
UNITED STATES PATENT AND TRADEMARK OFFICE
P.O. BOX 1450
ALEXANDRIA, VA 22313-1450
www.uspto.gov

ROHM AND HAAS COMPANY
PATENT DEPARTMENT
100 INDEPENDENCE MALL WEST
PHILADELPHIA, PA 19106-2399

COPY MAILED

MAY 2 3 2008

OFFICE OF PETITIONS

In re Application of	:	
Abraham Benderly et al	:	
Application No. 10/978,855	:	ON PETITION
Filed: November 1, 2004	:	
Attorney Docket No. A01596	:	

This is a decision on the petition filed January 18, 2008 under 37 CFR 1.137(b), to revive the above-identified application.

The petition is **GRANTED.**

The above-identified application became abandoned for failure to submit the Issue fee and Publication fee in a timely manner in reply to the Notice of Allowance mailed August 31, 2007, which set a statutory period for reply of three (3) months. Accordingly, the above-identified application became abandoned on December 1, 2007.

The petition satisfies the conditions for revival pursuant to the provisions of 37 CFR 1.137(b) in that (1) the reply in the form of payment of the Issue fee and Publication fee; (2) the petition fee; and (3) the required statement of unintentional delay have been received. Accordingly, the issue fee is accepted as having been unintentionally delayed.

Telephone inquiries concerning this decision should be directed to the undersigned at (571) 272-3210.

This matter is being referred to the Office of Data Management for further processing.

Irvin Dingle
Petitions Examiner
Office of Petitions

UNITED STATES PATENT AND TRADEMARK OFFICE

Commissioner for Patents
United States Patent and Trademark Office
P.O. Box 1450
Alexandria, VA 22313-1450
www.uspto.gov

RAYMOND M. GALASSO
SIMON, GALASSO & FRANTZ PLC
P.O. BOX 26503
AUSTIN TX 78755-0503

COPY MAILED

MAY 01 2009

OFFICE OF PETITIONS

In re Application of :
Oberoi, Ravi :
Application No. 10/978,881 :
Filed: November 1, 2004 :
Title: Electronic Sign-In Board and Method for :
Facilitating Use Thereof

ON PETITION

This is a decision on the petition under 37 CFR 1.181, filed January 28, 2009, requesting the withdrawal of the holding of abandonment in the above-identified application and has been so treated.

The petition to withdraw the holding of abandonment is **GRANTED.**

The above-identified application was held abandoned for failure to timely reply to the non-final Office action mailed April 3, 2008, which set a shortened statutory period for reply of three (3) months. A reply was due on or before July 3, 2008. A Notice of Abandonment was mailed on October 14, 2008.

Petitioner states that the reply was in fact timely filed. To support this assertion, petitioner has submitted a copy of the return postcard, which acknowledges receipt by the U.S. Patent and Trademark Office (USTPO) on July 7, 2008 of 1. Transmittal Letter; 2. Amendment; and Response (9 pp) and 3. Confirmation Postcard. Additionally, petitioner has supplied a copy of the previously mailed correspondence, which bears a certificate of mailing date of July 1, 2008.

MPEP 503 states that "A post card receipt which itemizes and properly identifies the items which are being filed serves as *prima facie* evidence of receipt in the USPTO of all the items listed thereon on the date stamped thereon by the USPTO." The reply acknowledged as having been received in the USPTO on July 7, 2008 (certificate of mailing date of July 1, 2008) has now been located. The application serial number listed on the Transmittal letter is 11/978,881, rather than the proper 10/978,881; therefore the papers were originally matched up with the incorrect application. The papers have now been moved into the instant application.

In view of the above, the holding of abandonment is hereby withdrawn and the application restored to pending status. A petition to withdraw the holding of abandonment under the provisions of 37 CFR 1.181 does not require a fee and none has been charged.

This matter is being referred to Technology Center AU 3629 for further examination on the merits.

Telephone inquiries concerning this decision should be directed to the undersigned at (571) 272-3206.

Liana Walsh
Petitions Examiner
Office of Petitions

UNITED STATES PATENT AND TRADEMARK OFFICE

Commissioner for Patents
United States Patent and Trademark Office
P.O. Box 1450
Alexandria, VA 22313-1450
www.uspto.gov

MAILED

MAY 2 1 2010

OFFICE OF PETITIONS

The Jackson Patent Group
1500 Forest Avenue, Suite 212
RICHMOND VA 23229

In re Patent No. 6,986,585 :
Issue Date: January 17, 2006 :
Application No. 10/978,887 : ON PETITION
Filed: November 1, 2004 :
Attorney Docket No. **1534(SURA)** :

This is a decision on the petition under 37 CFR 1.378(c), filed February 15, 2010, to accept the unintentionally delayed payment of a maintenance fee for the above-identified patent.

The petition is **GRANTED**.

This patent expired at midnight January 17, 2009, for failure to pay the 3½ year maintenance fee. Since this petition was submitted within twenty-four months after the six-month grace period provided in 37 CFR 1.362(e), the petition was timely filed under the provisions of 37 CFR 1.378(c).

The maintenance fee is hereby accepted and the above-identified patent is reinstated as of the mail date of this decision.

Telephone inquiries concerning this decision should be directed to JoAnne Burke at (571) 272-4584.

/JoAnne Burke/
JoAnne Burke
Petitions Examiner
Office of Petitions

UNITED STATES PATENT AND TRADEMARK OFFICE

Commissioner for Patents
United States Patent and Trademark Office
P.O. Box 1450
Alexandria, VA 22313-1450
www.uspto.gov

NIXON PEABLDY LLP
300 S. RIVERSIDE PLAZA, 16TH FLOOR
CHICAGO IL 60606-6613

COPY MAILED
FEB 25 2010

In re Application of	:	
Andreas Moller et al	:	
Application No. 10/978,888	:	DECISION ON PETITION
Filed: November 1, 2004	:	
Attorney Docket No. MSE-2635	:	

This is a decision on the petition, filed November 6, 2009, under 37 CFR 1.181(a) to Withdraw Holding of Abandonment.

The petition under 37 CFR 1.181(a) is **GRANTED**.

The application was held abandoned for failure to timely reply to the nonfinal rejection mailed May 7, 2009.

The petition states that "according to M.P.E.P. § 707.13, the period for responding to the Office Action ends six months from the date of remailing, i.e., May 7, 2009, and that the Notice of Abandonment was improperly issued before the end of the six-month period, i.e. November 7, 2009."

In view of the above, and the remailing of the nonfinal rejection on May 7, 2009, and the receipt of an amendment on November 6, 2009, the holding of abandonment is hereby withdrawn and the application restored to pending status.

Telephone inquiries concerning this decision should be directed to the undersigned at (571) 272-3208.

This matter is being referred to Technology Center AU 1797 for appropriate action by the Examiner in the normal course of business on the reply received November 6, 2009.

/KOC/
Karen Creasy
Petitions Examiner
Office of Petitions

UNITED STATES PATENT AND TRADEMARK OFFICE

Commissioner for Patents
United States Patent and Trademark Office
P.O. Box 1450
Alexandria, VA 22313-1450
www.uspto.gov

FOLEY & LARDNER LLP
777 EAST WISCONSIN AVENUE
MILWAUKEE WI 53202-5306

MAILED

NOV 23 2009

OFFICE OF PETITIONS

In re Application
William G. Howard et al.
Application No. 10/978,970
Filed: October 29, 2004
Attorney Docket No. **038469-0228**
(P0020539.00 US)

: DECISION ON APPLICATION
: FOR PATENT TERM ADJUSTMENT

This is in response to the REQUEST FOR RECONSIDERATION OF PATENT TERM ADJUSTMENT UNDER 37 C.F.R. §1.705filed September 16, 2009. Applicant requests that the determination of patent term adjustment be corrected from 699 days to 1104 days. Applicant requests this correction in part on the basis that the Office will take in excess of three years to issue this patent and in light of the recent court decision in Wyeth v. Dudas, No. 07-1492 (D.D.C. September 30, 2008).

Patentees request that the decision on this request for reconsideration of patent term adjustment be deferred or delayed until a final decision has been rendered in Wyeth v. Dudas. There is no specific regulatory provision for requesting that a petition under 37 CFR 1.705(d) be held in abeyance.

As the instant application for patent term adjustment requests reconsideration of the patent term adjustment as it relates to the Office's failure to issue the patent within three years of the filing date, the application for patent term adjustment under 37 CFR 1.705(b) is **DISMISSED as PREMATURE**.

Knowledge of the actual date the patent issues is required to calculate the amount, if any, of additional patent term patentees are entitled to for Office failure to issue the patent within three years. See 37 CFR 1.702(b). (This is true even where a request for continued examination (RCE) was filed). The computer will not undertake the § 1.702(b) calculation until the actual date of issuance of the patent has been determined. Likewise, the computer will not calculate any further Office delay under 37 CFR 1.702(a)(4) or applicant delay under 37 CFR 1.704(c)(10) until the actual date of issuance of the patent has been determined. As such, the Office cannot make a determination on the of the patent term adjustment concerning those regulations until the patent has issued.

Requesting reconsideration of the patent term adjustment to be indicated on the patent under 37 CFR 1.705(b) based on the initial determination of patent term adjustment and a projected issuance date of the patent (or even the filing date of the request for continued examination) is premature. Accordingly, it is appropriate to dismiss such a request as premature.

Rather than file an application for patent term adjustment under 37 CFR 1.705(b) contesting the 37 CFR 1.702(b) calculation at the time of the mailing of the notice of allowance, applicants are advised that they may wait until the time of the issuance of the patent and file a request for reconsideration of the patent term adjustment pursuant to 37 CFR 1.705(d). As the USPTO does not calculate the amount of time earned pursuant to 37 CFR 1.702(b) until the time of the issuance of the patent, the Office will consider any request for reconsideration of the patent term adjustment due to an error in the calculation of 37 CFR 1.702(b) to be timely if the request for reconsideration is filed within two months of the issuance of the patent. However, as to all other bases for contesting the initial determination of patent term adjustment received with the notice of allowance, applicants must timely file an application for patent term adjustment prior to the payment of the issue fee.[1]

The Office acknowledges submission of the $200.00 fee set forth in 37 CFR 1.18(e) for consideration of the application for patent term adjustment under 37 CFR 1.705(b).

Any request for reconsideration of the patent term adjustment indicated on the patent must be timely filed within two months after issuance pursuant to 37 CFR 1.705(d) and must include payment of the required fee under 37 CFR 1.18(e).

The Office of Data Management has been advised of this decision. This application is being referred to the Office of Data Management for issuance of the patent.

Telephone inquiries specific to this decision should be directed to Senior Petitions Attorney Patricia Faison-Ball at (571) 272-3212.

/Kery A. Fries/

Kery A. Fries
Senior Legal Advisor
Office of Patent Legal Administration
Office of Deputy Commissioner
for Examination Policy

---

[1] For example, if applicants dispute both the calculation of patent term adjustment under 37 CFR 1.702(a)(1) for Office failure to mail a first Office action or notice of allowance not later than fourteen months after the date on which the application was filed, and under 37 CFR 1.702(b) for Office failure to issue a patent within three years of the actual filing date of the application, then applicants must still timely file an application for patent term adjustment prior to the payment of the issue fee to contest the calculation of Office delay in issuing a first Office action or notice of allowance. See 37 CFR 1.705(b) and 35 U.S.C. 154(b)(3)(B). A dispute as to the calculation of the § 1.702(a)(1) period raised on request for reconsideration of patent term adjustment under 37 CFR 1.705(d) will be dismissed as untimely filed.

UNITED STATES PATENT AND TRADEMARK OFFICE

UNITED STATES DEPARTMENT OF COMMERCE
United States Patent and Trademark Office
Address: COMMISSIONER FOR PATENTS
P.O. Box 1450
Alexandria, Virginia 22313-1450
www.uspto.gov

FOLEY & LARDNER LLP
777 EAST WISCONSIN AVENUE
MILWAUKEE, WI 53202-5306

Mail Date: 04/21/2010

Applicant	: William G. Howard	: DECISION ON REQUEST FOR
Patent Number	: 7641992	: RECALCULATION of PATENT
Issue Date	: 01/05/2010	: TERM ADJUSTMENT IN VIEW
Appliction No	: 10/978,970	: OF WYETH AND NOTICE OF INTENT TO
Filed	: 10/29/2004	: ISSUE CERTIFICATE OF CORRECTION
		:

The Request for Recalculation is **GRANTED** to the extent indicated.

The patent term adjustment has been determined to be **991** days. The USPTO will *sua sponte* issue a certificate of correction reflecting the amount of PTA days determined by the recalculation.

Prior to the issuance of the certificate of correction, the USPTO will afford patentee an opportunity to be heard and request reconsideration. Accordingly, patentee has **one month or thirty (30) days**, whichever is longer, to file a request for reconsideration of this patent term adjustment calculation. See 35 U.S.C. 154(b)(3)(B)(ii) and 37 CFR 1.322(a)(4). No extensions of time will be granted under 37 CFR 1.136.

Patentee should use document code PET.OP if electronically filing a request for reconsideration of this patent term adjustment calculation. The patentee must also include the information required by 37 CFR 1.705(b)(2) and the fee required by 37 CFR 1.18(e). If patentee does not file a timely request for reconsideration of this patent term adjustment calculation including the information required by 37 CFR 1.705(b)(2) and the fee required by 37 CFR 1.18(e), the USPTO will issue a certificate of correction reflecting the PTA determination noted above.

Patentee should be aware that in order to preserve the right to review in the United States District Court for the District of Columbia of the USPTO patent term adjustment determination, patentee must ensure that he or she also take the steps required under 35 U.S.C. 154(b)(4)(A) in a timely manner. Nothing in the request for recalculation should be construed as providing an alternative time frame for commencing a civil action under 35 U.S.C. 154(b)(4)(A).

Any questions concerning this decision should be directed to the Office of Patent Legal Administration at 571-272-7702.

UNITED STATES PATENT AND TRADEMARK OFFICE

UNITED STATES DEPARTMENT OF COMMERCE
United States Patent and Trademark Office
Address: COMMISSIONER FOR PATENTS
P.O. Box 1450
Alexandria, Virginia 22313-1450
www.uspto.gov

FOLEY & LARDNER LLP
777 EAST WISCONSIN AVENUE
MILWAUKEE, WI 53202-5306

Mail Date: 05/18/2010

Applicant : William G. Howard
Patent Number : 7641992
Issue Date : 01/05/2010
Application No : 10/978,970
Filed : 10/29/2004

: NOTICE CONCERNING IMPROPER
: CALCULATION OF PATENT TERM
: ADJUSTMENT BASED UPON USPTO
: IMPROPERLY MEASURING REDUCTION
: PERIOD UNDER 37 CFR 1.704(c)(10).

The United States Patent and Trademark Office (USPTO) discovered that in processing the recent recalculation decisions mailed in response to patentee's filed Request for Recalculation of Patent Term Adjustment in view of Wyeth, the USPTO improperly measured the reduction period for reductions under 37 CFR 1.704(c)(10). Pursuant to 37 CFR 1.704(c)(10), patentee's reduction begins on the date of filing the amendment under 37 CFR 1.312 ("1.312 amendment") or other related paper and ends on the date that the Office mails a response to the filing of the 1.312 amendment or other paper. It has been discovered that during the recalculation, the calculation failed to the limit the reduction to the mail date of the response to the 1.312 amendment or other paper. Accordingly, patentee's reductions were greater than warranted.

This notice **VACATES** the previous GRANTED request for recalculation and provides patentee with a revised GRANTED recalculation.

The patent term adjustment has been determined to be **1088** days. The USPTO will *sua sponte* issue a certificate of correction reflecting the amount of patent term adjustment (PTA) days determined by the recalculation.

Prior to the issuance of the certificate of correction, the USPTO will afford patentee an opportunity to be heard and request reconsideration. Accordingly, patentee has **one month or thirty (30) days** from the mail date of this notice, whichever is longer, to file a request for reconsideration of this PTA calculation. See 35 U.S.C. § 154(b)(3)(B)(ii) and 37 CFR 1.322(a)(4).

Patentee should use document code PET.OP if electronically filing a request for reconsideration of this PTA calculation. The patentee must also include the information required by 37 CFR 1.705(b)(2), and the fee required by 37 CFR 1.18(e). If patentee does not file a timely request for reconsideration of this PTA calculation, including the information required by 37 CFR 1.705(b)(2) and the fee required by 37 CFR 1.18(e), the USPTO will issue a certificate of correction reflecting the PTA determination noted above.

Patentee should be aware that in order to preserve the right of review of the USPTO's PTA determination in the United States District Court for the District of Columbia, patentee must ensure that the steps required under 35 U.S.C. § 154 (b)(4) are taken in a timely manner. Nothing in the request for recalculation should be construed as providing an alternative time frame for commencing a civil action under 35 U.S.C. § 154(b)(4).

UNITED STATES PATENT AND TRADEMARK OFFICE

Commissioner for Patents
United States Patent and Trademark Office
P.O. Box 1450
Alexandria, VA 22313-1450
www.uspto.gov

GREENBERG TRAURIG, LLP
77 WEST WACKER DRIVE
SUITE 2500
CHICAGO, IL 60601-1732

COPY MAILED

FEB 17 2005

OFFICE OF PETITIONS

In re Application of
Stephan De Clerq, Christopher Chambers, Wayne Scott, Allen Yuh, Paul D. Arling and Robert Lilleness
Application No. 10/978,971
Filed: November 1, 2004
Title: SYSTEM AND METHOD FOR CONTROLLING DEVICE LOCATION DETERMINATION

: DECISION GRANTING PETITION
: UNDER 37 CFR 1.47(a)

This is in response to the "Petition Under 37 CFR 1.47(a)," filed November 1, 2004.

The petition is **granted**.

Petitioner has shown that the non-signing inventor has refused to join in the filing of the above-identified application.

The above-identified application and papers have been reviewed and found in compliance with 37 CFR 1.47(a). This application is hereby accorded Rule 1.47(a) status. As provided in Rule 1.47(c), this Office will forward notice of this application's filing to the non-signing inventor at the address given in the petition. Notice of the filing of this application will also be published in the Official Gazette.

The file is being forwarded to Technology Center 2600 for examination *in due course*.

Telephone inquiries regarding this decision should be directed to the undersigned at (571)272-3228.

Edward J. Tannouse
Petitions Attorney
Office of Petitions
United States Patent and Trademark Office

UNITED STATES PATENT AND TRADEMARK OFFICE

Commissioner for Patents
United States Patent and Trademark Office
P.O. Box 1450
Alexandria, VA 22313-1450
www.uspto.gov

Sheehan Phinney Bass & Green, PA
c/o Peter Nieves
1000 Elm Street
Manchester, NH 03105-3701

COPY MAILED

FEB 0 4 2008

OFFICE OF PETITIONS

In re Application of	:	
J. Howell Mitchell et al.	:	
Application No. 10/978,973	:	DECISION ON PETITION
Filed: November 01, 2004	:	TO WITHDRAW
Attorney Docket No. 17268-6102	:	FROM RECORD
	:	

This is a decision on the Request to Withdraw as attorney or agent of record under 37 C.F.R. § 1.36(b), filed September 26, 2007.

The request is **NOT APPROVED** as moot.

A review of the file record indicates that the power of attorney to Sheehan Phinney Bass & Green PA has been revoked by the assignee of the patent application on December 5, 2007. Accordingly, the request to withdraw under 37 C.F.R. § 1.36(b) is moot.

All future communications from the Office will continue to be directed to the below-listed address until otherwise notified by applicant.

Telephone inquires concerning this decision should be directed to Terri Williams at 571-272-2991.

T. Williams
Terri Williams
Petitions Examiner
Office of Petitions

cc: **Opticus IP Law, PLLC**
7791 Alister Mackenzie Drive
Sarasota, FL 34240

UNITED STATES PATENT AND TRADEMARK OFFICE

UNITED STATES DEPARTMENT OF COMMERCE
United States Patent and Trademark Office
Address: COMMISSIONER FOR PATENTS
P.O. Box 1450
Alexandria, Virginia 22313-1450
www.uspto.gov

MICROSOFT CORPORATION
ONE MICROSOFT WAY
REDMOND, WA 98052-6399

Mail Date: 04/20/2010

Applicant	: Michael I. Torres	: DECISION ON REQUEST FOR
Patent Number	: 7620996	: RECALCULATION of PATENT
Issue Date	: 11/17/2009	: TERM ADJUSTMENT IN VIEW
Appliction No	: 10/978,993	: OF WYETH AND NOTICE OF INTENT TO
Filed	: 11/01/2004	: ISSUE CERTIFICATE OF CORRECTION
		:

The Request for Recalculation is **GRANTED** to the extent indicated.

The patent term adjustment has been determined to be **1007** days. The USPTO will *sua sponte* issue a certificate of correction reflecting the amount of PTA days determined by the recalculation.

Prior to the issuance of the certificate of correction, the USPTO will afford patentee an opportunity to be heard and request reconsideration. Accordingly, patentee has **one month or thirty (30) days**, whichever is longer, to file a request for reconsideration of this patent term adjustment calculation. See 35 U.S.C. 154(b)(3)(B)(ii) and 37 CFR 1.322(a)(4). No extensions of time will be granted under 37 CFR 1.136.

Patentee should use document code PET.OP if electronically filing a request for reconsideration of this patent term adjustment calculation. The patentee must also include the information required by 37 CFR 1.705(b)(2) and the fee required by 37 CFR 1.18(e). If patentee does not file a timely request for reconsideration of this patent term adjustment calculation including the information required by 37 CFR 1.705(b)(2) and the fee required by 37 CFR 1.18(e), the USPTO will issue a certificate of correction reflecting the PTA determination noted above.

Patentee should be aware that in order to preserve the right to review in the United States District Court for the District of Columbia of the USPTO patent term adjustment determination, patentee must ensure that he or she also take the steps required under 35 U.S.C. 154(b)(4)(A) in a timely manner. Nothing in the request for recalculation should be construed as providing an alternative time frame for commencing a civil action under 35 U.S.C. 154(b)(4)(A).

Any questions concerning this decision should be directed to the Office of Patent Legal Administration at 571-272-7702.

UNITED STATES PATENT AND TRADEMARK OFFICE

Commissioner for Patents
United States Patent and Trademark Office
P.O. Box 1450
Alexandria, VA 22313-1450
www.uspto.gov

MAY 13 2005

PARK & SUTTON LLP
3255 WILSHIRE BLVD
SUITE 1110
LOS ANGELES CA 90010

In re Application :
William B. Kim :
Serial No.: 10/979,020 : DECISION ON PETITION
Filed: November 1, 2004 :
For: Method for Making a Fabric Having A :
High Pile Density and a Fabric Made:
Therefrom :

This is in response to applicants' petition faxed December 10, 2004 to make the above-identified application special under the provisions of 37 CFR 1.102(c), based on the age of the applicant.

Applicant has satisfied the provisions set forth in M.P.E.P. 708.02, IV. Therefore the petition is **GRANTED**.

The application will be forwarded to the examiner for action on the merits commensurate with this decision.

Should there be any questions with regard to this letter please contact Richard Bertsch by letter addressed to the Director, Technology Center 3700, P.O. Box 1450 Alexandria, VA 22313-1450, or by telephone at (571) 272-3750 or by facsimile transmission at (703) 872-9306.

Richard A. Bertsch

Richard A. Bertsch, Director
Technology Center 3700

UNITED STATES PATENT AND TRADEMARK OFFICE

Commissioner for Patents
United States Patent and Trademark Office
P.O. Box 1450
Alexandria, VA 22313-1450
www.uspto.gov

FOLEY & LARDNER LLP
777 EAST WISCONSIN AVENUE
MILWAUKEE WI 53202-5306

COPY MAILED

AUG 03 2009

OFFICE OF PETITIONS

In re Application of	:	
Howard et al.	:	
Application No. 10/979,041	:	ON APPLICATION FOR
Filed: October 29, 2004	:	PATENT TERM ADJUSTMENT
Atty. Docket No. 038469-0219	:	
(P-21021.01)	:	

This is in response to the REQUEST FOR RECONSIDERATION OF PATENT TERM ADJUSTMENT UNDER 37 CFR §1.705, filed July 6, 2009. Applicants submit that the correct patent term adjustment to be indicated on the patent is one thousand two hundred ninety (1,290) days, not six hundred forty (640) days as calculated by the Office as of the mailing of the initial determination of patent term adjustment. Applicants seek this correction solely on the basis that the Office will take in excess of three years to issue this patent.

As the instant application for patent term adjustment requests reconsideration of the patent term adjustment as it relates to the Office's failure to issue the patent within three years of the filing date, the application for patent term adjustment under 37 CFR 1.705(b) is **DISMISSED as PREMATURE**.

Knowledge of the actual date the patent issues is required to calculate the amount, if any, of additional patent term patentees are entitled to for Office failure to issue the patent within three years. See 37 CFR 1.702(b). (This is true even where a request for continued examination (RCE) was filed). The computer will not undertake the § 1.702(b) calculation until the actual date of issuance of the patent has been determined. Likewise, the computer will not calculate any further Office delay under 37 CFR 1.702(a)(4) or applicant delay under 37 CFR

1.704(c)(10) until the actual date of issuance of the patent has been determined. As such, the Office cannot make a determination on the correctness of the patent term adjustment until the patent has issued.

Requesting reconsideration of the patent term adjustment to be indicated on the patent under 37 CFR 1.705(b) based on the initial determination of patent term adjustment and a projected issuance date of the patent (or even the filing date of the request for continued examination) is premature. Accordingly, it is appropriate to dismiss such a request as premature.

Rather than file an application for patent term adjustment under 37 CFR 1.705(b) contesting the 37 CFR 1.702(b) calculation at the time of the mailing of the notice of allowance, applicants are advised that they may wait until the time of the issuance of the patent and file a request for reconsideration of the patent term adjustment pursuant to 37 CFR 1.705(d). As the USPTO does not calculate the amount of time earned pursuant to 37 CFR 1.702(b) until the time of the issuance of the patent, the Office will consider any request for reconsideration of the patent term adjustment due to an error in the calculation of 37 CFR 1.702(b) to be timely if the request for reconsideration is filed within two months of the issuance of the patent. However, as to all other bases for contesting the initial determination of patent term adjustment received with the notice of allowance, applicants must timely file an application for patent term adjustment prior to the payment of the issue fee.[1]

The Office acknowledges submission of the $200.00 fee set forth in 37 CFR 1.18(e) for consideration of the application for patent term adjustment under 37 CFR 1.705(b).

---

[1] For example, if applicants dispute both the calculation of patent term adjustment under 37 CFR 1.702(a)(1) for Office failure to mail a first Office action or notice of allowance not later than fourteen months after the date on which the application was filed, and under 37 CFR 1.702(b) for Office failure to issue a patent within three years of the actual filing date of the application, then applicants must still timely file an application for patent term adjustment prior to the payment of the issue fee to contest the calculation of Office delay in issuing a first Office action or notice of allowance. See 37 CFR 1.705(b) and 35 U.S.C. 154(b)(3)(B). A dispute as to the calculation of the § 1.702(a)(1) period raised on request for reconsideration of patent term adjustment under 37 CFR 1.705(d) will be dismissed as untimely filed.

Any request for reconsideration of the patent term adjustment indicated on the patent must be timely filed within two months after issuance pursuant to 37 CFR 1.705(d) and must include payment of the required fee under 37 CFR 1.18(e).

The Office of Data Management has been advised of this decision. This application is being referred to the Office of Data Management for issuance of the patent.

Telephone inquiries specific to this decision should be directed to the undersigned at (571) 272-3211.

Christina Tartera Donnell

Christina Tartera Donnell
Senior Petitions Attorney
Office of Petitions

UNITED STATES PATENT AND TRADEMARK OFFICE

UNITED STATES DEPARTMENT OF COMMERCE
United States Patent and Trademark Office
Address: COMMISSIONER FOR PATENTS
P.O. Box 1450
Alexandria, Virginia 22313-1450
www.uspto.gov

FOLEY & LARDNER LLP
777 EAST WISCONSIN AVENUE
MILWAUKEE, WI 53202-5306

Mail Date: 04/21/2010

Applicant	: William G. Howard	: DECISION ON REQUEST FOR
Patent Number	: 7582387	: RECALCULATION of PATENT
Issue Date	: 09/01/2009	: TERM ADJUSTMENT IN VIEW
Appliction No	: 10/979,041	: OF WYETH AND NOTICE OF INTENT TO
Filed	: 10/29/2004	: ISSUE CERTIFICATE OF CORRECTION
		:

The Request for Recalculation is **GRANTED** to the extent indicated.

The patent term adjustment has been determined to be **1742** days. The USPTO will *sua sponte* issue a certificate of correction reflecting the amount of PTA days determined by the recalculation.

Prior to the issuance of the certificate of correction, the USPTO will afford patentee an opportunity to be heard and request reconsideration. Accordingly, patentee has **one month or thirty (30) days**, whichever is longer, to file a request for reconsideration of this patent term adjustment calculation. See 35 U.S.C. 154(b)(3)(B)(ii) and 37 CFR 1.322(a)(4). No extensions of time will be granted under 37 CFR 1.136.

Patentee should use document code PET.OP if electronically filing a request for reconsideration of this patent term adjustment calculation. The patentee must also include the information required by 37 CFR 1.705(b)(2) and the fee required by 37 CFR 1.18(e). If patentee does not file a timely request for reconsideration of this patent term adjustment calculation including the information required by 37 CFR 1.705(b)(2) and the fee required by 37 CFR 1.18(e), the USPTO will issue a certificate of correction reflecting the PTA determination noted above.

Patentee should be aware that in order to preserve the right to review in the United States District Court for the District of Columbia of the USPTO patent term adjustment determination, patentee must ensure that he or she also take the steps required under 35 U.S.C. 154(b)(4)(A) in a timely manner. Nothing in the request for recalculation should be construed as providing an alternative time frame for commencing a civil action under 35 U.S.C. 154(b)(4)(A).

Any questions concerning this decision should be directed to the Office of Patent Legal Administration at 571-272-7702.

UNITED STATES PATENT AND TRADEMARK OFFICE

UNITED STATES DEPARTMENT OF COMMERCE
United States Patent and Trademark Office
Address: COMMISSIONER FOR PATENTS
P.O. Box 1450
Alexandria, Virginia 22313-1450
www.uspto.gov

FOLEY & LARDNER LLP
777 EAST WISCONSIN AVENUE
MILWAUKEE, WI 53202-5306

Mail Date: 05/18/2010

Applicant : William G. Howard
Patent Number : 7582387
Issue Date : 09/01/2009
Application No : 10/979,041
Filed : 10/29/2004

: NOTICE CONCERNING IMPROPER
: CALCULATION OF PATENT TERM
: ADJUSTMENT BASED UPON USPTO
: IMPROPERLY MEASURING REDUCTION
: PERIOD UNDER 37 CFR 1.704(c)(10).

The United States Patent and Trademark Office (USPTO) discovered that in processing the recent recalculation decisions mailed in response to patentee's filed Request for Recalculation of Patent Term Adjustment in view of Wyeth, the USPTO improperly measured the reduction period for reductions under 37 CFR 1.704(c)(10). Pursuant to 37 CFR 1.704(c)(10), patentee's reduction begins on the date of filing the amendment under 37 CFR 1.312 ("1.312 amendment") or other related paper and ends on the date that the Office mails a response to the filing of the 1.312 amendment or other paper. It has been discovered that during the recalculation, the calculation failed to the limit the reduction to the mail date of the response to the 1.312 amendment or other paper. Accordingly, patentee's reductions were greater than warranted.

This notice **VACATES** the previous GRANTED request for recalculation and provides patentee with a revised GRANTED recalculation.

The patent term adjustment has been determined to be **1795** days. The USPTO will *sua sponte* issue a certificate of correction reflecting the amount of patent term adjustment (PTA) days determined by the recalculation.

Prior to the issuance of the certificate of correction, the USPTO will afford patentee an opportunity to be heard and request reconsideration. Accordingly, patentee has **one month or thirty (30) days** from the mail date of this notice, whichever is longer, to file a request for reconsideration of this PTA calculation. See 35 U.S.C. § 154(b)(3)(B)(ii) and 37 CFR 1.322(a)(4).

Patentee should use document code PET.OP if electronically filing a request for reconsideration of this PTA calculation. The patentee must also include the information required by 37 CFR 1.705(b)(2), and the fee required by 37 CFR 1.18(e). If patentee does not file a timely request for reconsideration of this PTA calculation, including the information required by 37 CFR 1.705(b)(2) and the fee required by 37 CFR 1.18(e), the USPTO will issue a certificate of correction reflecting the PTA determination noted above.

Patentee should be aware that in order to preserve the right of review of the USPTO's PTA determination in the United States District Court for the District of Columbia, patentee must ensure that the steps required under 35 U.S.C. § 154 (b)(4) are taken in a timely manner. Nothing in the request for recalculation should be construed as providing an alternative time frame for commencing a civil action under 35 U.S.C. § 154(b)(4).

UNITED STATES PATENT AND TRADEMARK OFFICE

Commissioner for Patents
United States Patent and Trademark Office
P.O. Box 1450
Alexandria, VA 22313-1450
www.uspto.gov

FOLEY & LARDNER LLP
777 EAST WISCONSIN AVENUE
MILWAUKEE WI 53202-5306

MAILED

MAY 19 2010

OFFICE OF PETITIONS

In re Patent No. 7,582,387	:	DECISION ON REQUEST FOR
Howard et al.	:	RECONSIDERATION OF
Issue Date: September 1, 2009	:	PATENT TERM ADJUSTMENT
Application No. 10/979,041	:	AND
Filed: October 29, 2004	:	NOTICE OF INTENT TO ISSUE
Atty Docket No. 038469-0219	:	CERTIFICATE OF CORRECTION
(P-21021.01)	:	

This is a decision on the petition filed on October 30, 2009, which is being treated as a petition under 37 CFR 1.705(d) requesting that the patent term adjustment indicated on the above-identified patent be corrected to indicate that the term of the above-identified patent is extended or adjusted by one thousand two hundred fifteen (1215) days.

The petition to correct the patent term adjustment indicated on the above-identified patent is **GRANTED to the extent indicated herein.** The term of the above-identified patent is extended or adjusted by **one thousand two hundred fifteen (1215) days**.

On October 30, 2009, patentee submitted a petition under 37 CFR 1.705(d) and fee. On February 26, 2010, patentee filed a Request for Recalculation of Patent Term Adjustment in View of *Wyeth*. On April 21, 2010, the Office mailed a "DECISION ON REQUEST FOR RECALCULATION OF PATENT TERM ADJUSTMENT IN VIEW OF WYETH AND NOTICE OF INTENT TO ISSUE CERTIFICATE OF CORRECTION" indicating that the patent term adjustment had been determined to be 1742 days. On May 18, 2010, the Office mailed a "NOTICE CONCERNING IMPROPER CALCULATION OF PATENT TERM ADJUSTMENT BASED UPON USPTO IMPROPERLY MEASURING REDUCTION PERIOD UNDER 37 CFR 1.704(c)(10)" ("Notice"). The Notice vacated the previously GRANTED request for recalculation of April 21, 2010. The Notice

indicated that the patent term adjustment had been determined to be 1795 days and that a certificate of correction would be issued reflecting the amount of patent term adjustment.

The Office notes that the Notice of May 18, 2010, was issued in error as it accorded patentee 580 more days of patent term adjustment than were warranted. Accordingly, the present decision supersedes both the decision mailed on April 21, 2010, and the Notice mailed on May 18, 2010.

The Office has determined that the patent term adjustment for the above-identified patent is **1215 days**. The 580 additional days of adjustment will be removed.

The Office will *sua sponte* issue a certificate of correction. Pursuant to 37 CFR 1.322, the Office will not issue a certificate of correction without first providing assignee or patentee an opportunity to be heard. Accordingly, patentee is given **one (1) month or thirty (30) days**, whichever is longer, from the mail date of this decision to respond. No extensions of time will be granted under § 1.136.

The Office acknowledges the previous submission of the required fee of $200.00 set forth in 37 CFR 1.18(e).

This matter is being referred to the Certificates of Correction Branch for issuance of a certificate of correction. The Office will issue a certificate of correction indicating that the term of the above-identified patent is extended or adjusted by **1215 days**.

Telephone inquiries specific to this matter should be directed to the undersigned at (571) 272-3211.

Christina Tartera Donnell

Christina Tartera Donnell
Senior Petitions Attorney
Office of Petitions

Enclosure: Copy of DRAFT Certificate of Correction

UNITED STATES PATENT AND TRADEMARK OFFICE

CERTIFICATE OF CORRECTION

PATENT : 7,582,387 B2

DATED : Sept. 1, 2009 **DRAFT**

INVENTOR(S) : Howard et al.

It is certified that error appears in the above-identified patent and that said Letters Patent is hereby corrected as shown below:

On the cover page,

[*] Notice: Subject to any disclaimer, the term of this patent is extended or adjusted under 35 USC 154(b) by 635 days

Delete the phrase "by 635 days" and insert – by 1215 days--

Day : Monday
Date: 5/17/2010

PALM INTRANET

Time: 15:16:03

PTA Calculations for Application: 10/979041			
Application Filing Date:	10/29/2004	PTO Delay (PTO):	1342
Issue Date of Patent:	09/01/2009	Three Years:	0
Pre-Issue Petitions:	0	Applicant Delay (APPL):	127
Post-Issue Petitions:	0	Total PTA (days):	1215
PTO Delay Adjustment:	0		

File Contents History

Number	Date	Contents Description	PTO	APPL	START
105	05/17/2010	ADJUSTMENT OF PTA CALCULATION BY PTO		580	
102	05/13/2010	PETITION DECISION - GRANTED			
101	02/26/2010	PETITION ENTERED			
100	04/21/2010	MAIL-PETITION DECISION - GRANTED			
99	04/17/2010	PETITION DECISION - GRANTED			
98	04/09/2010	ADJUSTMENT OF PTA CALCULATION BY PTO			
98	04/09/2010	ADJUSTMENT OF PTA CALCULATION BY PTO	580		
97	02/26/2010	PETITION ENTERED			
94	09/01/2009	RECORDATION OF PATENT GRANT MAILED			
93	08/12/2009	ISSUE NOTIFICATION MAILED			
92.5	09/01/2009	PTA 36 MONTHS	673		
92	09/01/2009	PATENT ISSUE DATE USED IN PTA CALCULATION			
91	08/07/2009	EXPORT TO FINAL DATA CAPTURE			
90	08/06/2009	DISPATCH TO FDC			
89	08/06/2009	DISPATCH TO FDC			
88	08/03/2009	MAIL-PETITION DECISION - DISMISSED			
87	08/03/2009	PETITION DECISION - DISMISSED			
86	07/16/2009	APPLICATION IS CONSIDERED READY FOR ISSUE			
85	07/15/2009	ISSUE FEE PAYMENT VERIFIED			
84	07/15/2009	ISSUE FEE PAYMENT RECEIVED			
83	07/10/2009	MAIL MISCELLANEOUS COMMUNICATION TO APPLICANT			
82	07/09/2009	MISCELLANEOUS COMMUNICATION TO APPLICANT - NO ACTION COUNT			
81	07/06/2009	INFORMATION DISCLOSURE STATEMENT			

		CONSIDERED			
80	07/06/2009	PETITION ENTERED			
79	07/06/2009	REFERENCE CAPTURE ON IDS			
78	07/06/2009	INFORMATION DISCLOSURE STATEMENT (IDS) FILED		5	83
77	07/06/2009	INFORMATION DISCLOSURE STATEMENT (IDS) FILED			
76	06/16/2009	FINISHED INITIAL DATA CAPTURE			
75	05/11/2009	RECEIPT INTO PUBS			
74	05/04/2009	EXPORT TO INITIAL DATA CAPTURE			
72	04/30/2009	MAIL NOTICE OF ALLOWANCE			
71	04/27/2009	ISSUE REVISION COMPLETED			
70	04/27/2009	DOCUMENT VERIFICATION			
69	04/23/2009	NOTICE OF ALLOWANCE DATA VERIFICATION COMPLETED			
68	04/23/2009	CASE DOCKETED TO EXAMINER IN GAU			
67	04/23/2009	EXAMINER'S AMENDMENT COMMUNICATION			
66	04/23/2009	NOTICE OF ALLOWABILITY			
65	04/22/2009	PARALEGAL TD ACCEPTED			
64	04/21/2009	TERMINAL DISCLAIMER FILED		46	56
63	03/06/2009	INFORMATION DISCLOSURE STATEMENT CONSIDERED			
62	04/10/2009	INFORMATION DISCLOSURE STATEMENT CONSIDERED			
61	04/10/2009	INFORMATION DISCLOSURE STATEMENT (IDS) FILED			
59	03/06/2009	REFERENCE CAPTURE ON IDS			
58	03/06/2009	INFORMATION DISCLOSURE STATEMENT (IDS) FILED			
57	03/21/2009	DATE FORWARDED TO EXAMINER			
56	03/06/2009	RESPONSE AFTER NON-FINAL ACTION		45	51
55	03/06/2009	REQUEST FOR EXTENSION OF TIME - GRANTED			
54	03/06/2009	INFORMATION DISCLOSURE STATEMENT (IDS) FILED			
52	08/04/2008	INFORMATION DISCLOSURE STATEMENT (IDS) FILED		0	47
51	10/20/2008	MAIL NON-FINAL REJECTION			
50	10/17/2008	NON-FINAL REJECTION			
49	08/04/2008	INFORMATION DISCLOSURE STATEMENT			

		CONSIDERED			
48	09/16/2008	DATE FORWARDED TO EXAMINER			
47	08/04/2008	RESPONSE AFTER NON-FINAL ACTION		31	42
46	08/04/2008	AFFIDAVIT(S) (RULE 131 OR 132) OR EXHIBIT(S) RECEIVED			
45	08/04/2008	REQUEST FOR EXTENSION OF TIME - GRANTED			
44	08/04/2008	REFERENCE CAPTURE ON IDS			
43	08/04/2008	INFORMATION DISCLOSURE STATEMENT (IDS) FILED			
42	04/04/2008	MAIL NON-FINAL REJECTION			
41	03/31/2008	NON-FINAL REJECTION			
40	10/29/2004	INFORMATION DISCLOSURE STATEMENT CONSIDERED			
39	04/24/2006	INFORMATION DISCLOSURE STATEMENT CONSIDERED			
38	09/28/2006	INFORMATION DISCLOSURE STATEMENT CONSIDERED			
37	01/23/2007	INFORMATION DISCLOSURE STATEMENT CONSIDERED			
36	04/24/2007	INFORMATION DISCLOSURE STATEMENT CONSIDERED			
35	03/06/2008	DATE FORWARDED TO EXAMINER			
34	02/22/2008	RESPONSE TO ELECTION / RESTRICTION FILED			
33	01/30/2008	MAIL RESTRICTION REQUIREMENT	669		-1
32	01/28/2008	REQUIREMENT FOR RESTRICTION / ELECTION			
28	10/17/2007	WITHDRAW FLAGGED FOR 5/25			
27	10/15/2007	FLAGGED FOR 5/25			
26	10/08/2007	CASE DOCKETED TO EXAMINER IN GAU			
25	10/02/2007	CASE DOCKETED TO EXAMINER IN GAU			
24	10/02/2007	CASE DOCKETED TO EXAMINER IN GAU			
23	04/24/2007	REFERENCE CAPTURE ON IDS			
22.7	04/24/2007	INFORMATION DISCLOSURE STATEMENT (IDS) FILED			
22	04/24/2007	INFORMATION DISCLOSURE STATEMENT (IDS) FILED			
21	01/23/2007	REFERENCE CAPTURE ON IDS			
20.7	01/23/2007	INFORMATION DISCLOSURE STATEMENT (IDS) FILED			
20	01/23/2007	INFORMATION DISCLOSURE STATEMENT (IDS)			

		FILED			
19	09/28/2006	REFERENCE CAPTURE ON IDS			
18.7	09/28/2006	INFORMATION DISCLOSURE STATEMENT (IDS) FILED			
18	09/28/2006	INFORMATION DISCLOSURE STATEMENT (IDS) FILED			
17	04/24/2006	REFERENCE CAPTURE ON IDS			
16.7	04/24/2006	INFORMATION DISCLOSURE STATEMENT (IDS) FILED			
16	04/24/2006	INFORMATION DISCLOSURE STATEMENT (IDS) FILED			
15	10/29/2004	REFERENCE CAPTURE ON IDS			
14.7	10/29/2004	INFORMATION DISCLOSURE STATEMENT (IDS) FILED			
14	10/29/2004	INFORMATION DISCLOSURE STATEMENT (IDS) FILED			
13	01/21/2005	IFW TSS PROCESSING BY TECH CENTER COMPLETE			
12	01/21/2005	CASE DOCKETED TO EXAMINER IN GAU			
11	12/10/2004	APPLICATION RETURN FROM OIPE			
10	12/13/2004	APPLICATION IS NOW COMPLETE			
9	12/10/2004	APPLICATION RETURN TO OIPE			
8	12/10/2004	APPLICATION RETURN FROM OIPE			
7	12/10/2004	APPLICATION RETURN TO OIPE			
6	12/10/2004	APPLICATION DISPATCHED FROM OIPE			
5	12/10/2004	APPLICATION IS NOW COMPLETE			
4	12/03/2004	CLEARED BY OIPE CSR			
3	12/03/2004	CASE CLASSIFIED BY OIPE			
2	11/15/2004	IFW SCAN & PACR AUTO SECURITY REVIEW			
1	10/29/2004	INITIAL EXAM TEAM NN			

Search Another: Application# Search

EXPLANATION OF PTA CALCULATION

EXPLANATION OF PTE CALCULATION

To go back, right click here and select Back. To go forward, right click here and select Forward. To refresh, right click here and select Refresh.

Back to OASIS | Home page

UNITED STATES PATENT AND TRADEMARK OFFICE

Commissioner for Patents
United States Patent and Trademark Office
P.O. Box 1450
Alexandria, VA 22313-1450
www.uspto.gov

FOLEY & LARDNER LLP
777 EAST WISCONSIN AVENUE
MILWAUKEE, WI 53202-5306

MAILED

JUN 0 7 2010

OFFICE OF PETITIONS

In re Application of **William G. HOWARD**, et *al.* Application No. 10/979,043 Filed: October 29, 2004 Attorney Docket No. **038469-0222 (P-21071.01)**	DECISION GRANTING PETITION UNDER 37 CFR 1.313(c)(2)

This is a decision on the petition under 37 CFR 1.313(c)(2), filed June 4, 2010, to withdraw the above-identified application from issue after payment of the issue fee.

The petition is **GRANTED**.

The above-identified application is withdrawn from issue for consideration of a submission under 37 CFR 1.114 (request for continued examination). *See* 37 CFR 1.313(c)(2).

Petitioner is advised that the issue fee paid on March 9, 2010 cannot be refunded. If, however, this application is again allowed, petitioner may request that it be applied towards the issue fee required by the new Notice of Allowance.[1]

Telephone inquiries should be directed to the undersigned at (571) 272-7253.

This application is being referred to Technology Center AU 1795 for processing of the request for continued examination under 37 CFR 1.114 and for consideration of the concurrently filed information disclosure statement.

/Monica A. Graves/
Petitions Examiner, Office of Petitions

---

[1] *The request to apply the issue fee to the new Notice may be satisfied by completing and returning the new Part B – Fee(s) Transmittal Form (along with any balance due at the time of submission). Petitioner is advised that the Issue Fee Transmittal Form* ***must*** *be completed and timely submitted to avoid abandonment of the application.*

UNITED STATES PATENT AND TRADEMARK OFFICE

Commissioner for Patents
United States Patent and Trademark Office
P.O. Box 1450
Alexandria, VA 22313-1450
www.uspto.gov

WOODARD, EMHARDT, MORIARTY, MCNETT & HENRY LLP
111 MONUMENT CIRCLE, SUITE 3700
INDIANAPOLIS IN 46204-5137

COPY MAILED

DEC 2 0 2007

OFFICE OF PETITIONS

In re Application of	:	
Carey Thomas	:	
Application No. 10/979,050	:	DECISION ON PETITION
Filed: November 2, 2004	:	
Attorney Docket No. CJT-1	:	

This is a decision on the petition, filed December 13, 2007, which is being treated as a petition under 37 CFR 1.181 (no fee) requesting withdrawal of the holding of abandonment in the above-identified application.

The petition is **GRANTED**.

This application was held abandoned for failure to reply to the Notice of Allowance mailed August 2, 2007, which set a three (3) month statutory period for reply. A Notice of Abandonment was mailed on November 29, 2007.

Petitioner asserts that the Notice of Allowance and Notice of Allowability dated August 2, 2007 was not received.

A review of the written record indicates an irregularity in the mailing of the Notice of Allowance and Notice of Allowability. In this regard, the Office received a change of address on March 15, 2007, prior to the mailing of the Notice of Allowance and Notice of Allowability of August 2, 2007. Office records were not updated to reflect this new change of address. Accordingly, as the Notice of Allowance and Notice of Allowability were mailed to an incorrect address, the Notice of Abandonment mailed November 29, 2007 is hereby vacated and the holding of abandonment withdrawn.

This application is being referred to the Technology Center technical support staff of Art Unit 3612 for remailing the Notice of Allowance and Notice of Allowability of August 2, 2007 and resetting the period for reply.

Any inquiries concerning this decision may be directed to the undersigned at (571) 272-3215.

Charlema Grant
Petitions Attorney
Office of Petitions

UNITED STATES PATENT AND TRADEMARK OFFICE

Commissioner for Patents
United States Patent and Trademark Office
P.O. Box 1450
Alexandria, VA 22313-1450
www.uspto.gov

Townsend and Townsend and Crew, LLP
Two Embarcadero Center
Eighth Floor
San Francisco, CA 94111-3834

COPY MAILED

MAR 1 4 2008

OFFICE OF PETITIONS

In re Application of	:	
James F. Zucherman et al.	:	
Application No. 10/979,062	:	DECISION ON PETITION
Filed: November 2, 2004	:	TO WITHDRAW
Attorney Docket No. 31132.761	:	FROM RECORD
	:	

This is a decision on the Request to Withdraw as attorney or agent of record under 37 C.F.R. § 1.36(b), filed November 10, 2007.

The request is **NOT APPROVED** because it is moot.

A review of the file record indicates that the power of attorney to Townsend and Townsend and Crew, LLP has been revoked by the assignee of the patent application on January 7, 2008. Accordingly, the request to withdraw under 37 C.F.R. § 1.36(b) is moot.

All future communications from the Office will continue to be directed to the below-listed address until otherwise notified by applicant.

Telephone inquires concerning this decision should be directed to Terri Williams at 571-272-2991.

T. Williams

Terri Williams
Petitions Examiner
Office of Petitions

cc: **Haynes and Boone, LLP**
901 Main Street
Suite 3100
Dallas, TX 75202

UNITED STATES PATENT AND TRADEMARK OFFICE

UNITED STATES DEPARTMENT OF COMMERCE
United States Patent and Trademark Office
Address: COMMISSIONER FOR PATENTS
P.O. Box 1450
Alexandria, Virginia 22313-1450
www.uspto.gov

MERCK
PATENT DEPARTMENT (K-6-1, 1990)
2000 GALLOPING HILL ROAD
KENILWORTH, NJ 07033-0530

Mail Date: 04/21/2010

Applicant	: Michael W. Miller	: DECISION ON REQUEST FOR
Patent Number	: 7652142	: RECALCULATION of PATENT
Issue Date	: 01/26/2010	: TERM ADJUSTMENT IN VIEW
Appliction No	: 10/979,075	: OF WYETH AND NOTICE OF INTENT TO
Filed	: 11/01/2004	: ISSUE CERTIFICATE OF CORRECTION
		:

The Request for Recalculation is **GRANTED** to the extent indicated.

The patent term adjustment has been determined to be **738** days. The USPTO will *sua sponte* issue a certificate of correction reflecting the amount of PTA days determined by the recalculation.

Prior to the issuance of the certificate of correction, the USPTO will afford patentee an opportunity to be heard and request reconsideration. Accordingly, patentee has **one month or thirty (30) days**, whichever is longer, to file a request for reconsideration of this patent term adjustment calculation. See 35 U.S.C. 154(b)(3)(B)(ii) and 37 CFR 1.322(a)(4). No extensions of time will be granted under 37 CFR 1.136.

Patentee should use document code PET.OP if electronically filing a request for reconsideration of this patent term adjustment calculation. The patentee must also include the information required by 37 CFR 1.705(b)(2) and the fee required by 37 CFR 1.18(e). If patentee does not file a timely request for reconsideration of this patent term adjustment calculation including the information required by 37 CFR 1.705(b)(2) and the fee required by 37 CFR 1.18(e), the USPTO will issue a certificate of correction reflecting the PTA determination noted above.

Patentee should be aware that in order to preserve the right to review in the United States District Court for the District of Columbia of the USPTO patent term adjustment determination, patentee must ensure that he or she also take the steps required under 35 U.S.C. 154(b)(4)(A) in a timely manner. Nothing in the request for recalculation should be construed as providing an alternative time frame for commencing a civil action under 35 U.S.C. 154(b)(4)(A).

Any questions concerning this decision should be directed to the Office of Patent Legal Administration at 571-272-7702.

SPE RESPONSE FOR CERTIFICATE OF CORRECTION

Paper No.: _____

DATE : 07-16-08

TO SPE OF : ART UNIT 3728

SUBJECT : Request for Certificate of Correction for Appl. No.: **10979079** Patent No.: **710274**

710/274

Please respond to this request for a certificate of correction within 7 days.

Please review the requested changes/corrections as shown in the **COCIN** document(s) in the IFW application image. No new matter should be introduced, nor should the scope or meaning of the claims be changed.

Please complete the response (see below) and forward the completed response to scanning using document code **COCX**.

Angela Green
Certificates of Correction Branch
703.308.9380 ext. 123

Thank You For Your Assistance

The request for issuing the above-identified correction(s) is hereby:
Note your decision on the appropriate box.

- ☒ **Approved** — **All** changes apply.
- ☐ **Approved in Part** — Specify below which changes **do not** apply.
- ☐ **Denied** — State the reasons for denial below.

Comments: Examiner approved.

/MY/ AU3728

SPE **Art Unit**

UNITED STATES PATENT AND TRADEMARK OFFICE

Commissioner for Patents
United States Patent and Trademark Office
P.O. Box 1450
Alexandria, VA 22313-1450
www.uspto.gov

INSKEEP INTELLECTUAL PROPERTY GROUP, INC
2281 W. 190TH STREET
SUITE 200
TORRANCE, CA 90504

MAILED

APR 27 2010

OFFICE OF PETITIONS

In re Application of	:	
Sune Svanberg, et al.	:	
Application No. 10/979,082	:	DECISION ON PETITION
Filed: November 2, 2004	:	
Attorney Docket No. 21948-501	:	

This is a decision on the petition under the unintentional provisions of 37 CFR 1.137(b), filed February 9, 2010, to revive the above-identified application.

The application became abandoned for failure to reply in a timely manner to the Restriction Requirement, mailed February 13, 2008 , which set a shortened statutory period for reply of one (1) month or thirty (30) days (whichever is later). No extensions of time under the provisions of 37 CFR 1.136(a) were obtained. Accordingly, the application became abandoned on March 14, 2008.

The petition satisfies the requirements of 37 CFR 1.137(b) in that petitioner has supplied (1) the reply in the form of an election, (2) the petition fee of $810, and (3) a proper statement of unintentional delay.

In view of the above, the petition is **GRANTED**.

It is not apparent whether the statement of unintentional delay was signed by a person who would have been in a position of knowing that the entire delay in filing the required reply from the due date for the reply until the filing of a grantable petition pursuant to 37 CFR 1.137(b) was unintentional. Nevertheless, in accordance with 37 CFR 10.18, the statement is accepted as constituting a certification of unintentional delay. However, in the event that petitioner has no knowledge that the delay was unintentional, petitioner must make such an inquiry to ascertain that, in fact, the delay was unintentional. If petitioner discovers that the delay was intentional, petitioner must so notify the Office.

Telephone inquiries concerning this decision should be directed to undersigned at (571) 272-1642. All other inquiries concerning the examination or status of this application should be directed to the Technology Center.

This application is being referred to Technology Center AU 1797 for appropriate action by the Examiner in the normal course of business on the reply received February 9, 2010.

April M. Wise
Petitions Examiner
Office of Petitions

UNITED STATES PATENT AND TRADEMARK OFFICE

Commissioner for Patents
United States Patent and Trademark Office
P.O. Box 1450
Alexandria, VA 22313-1450
www.uspto.gov

JJGJR.: 07-05

Paper __

COPY MAILED

JUL 2 2 2005

OFFICE OF PETITIONS

JAGTIANI + GUTTAG
10363-A DEMOCRACY LANE
FAIRFAX VA 22030

In re Application of	:	
Goodrich	:	
Application No. 10/979,138	:	DECISION ON PETITION
Filed: 3 November, 2004	:	
Attorney Docket No. GOOD-0004-UTY	:	

This is a decision on the petition under 37 C.F.R. §1.53, filed on 8 April, 2005, requesting that the above-identified application be accorded a filing date of 3 November, 2004.

The petition is **GRANTED**.

BACKGROUND

The application was deposited on 3 November, 2004.

On 8 February, 2005, the Office of Initial Patent Examination (OIPE) mailed a "Notice of Incomplete Nonprovisional Application" (the Notice) stating, *inter alia*, that no filing date had been assigned because the application was deposited without drawings,[1] and requiring drawings be filed if necessary.

The Notice informed Petitioner that the alternatives available were to: (a) petition contending that the application was deposited with drawings; (b) petition contending that the application did not require drawing for the understanding of the subject matter sought to be patented; or (c) submit the missing drawings and accept the date of that submission as the filing date of the application.

[1] The provisions of 35 U.S.C. §113 (first sentence) requires a drawing "where necessary for the understanding of the subject matter sought to be patented."

In response, Petitioner filed the instant papers on 8 April, 2005, and included therein a copy of a date-stamped ("NOV 03 2004") receipt card (see: MPEP §503)[2] submitted with the original application and 8 sheets of drawings.[3]

ANALYSIS

A review of the file reveals that the application was deposited on 3 November, 2004, and that the date-stamped ("NOV 3 2004") receipt card states in pertinent part:

* * *

X 21 Pages of Specification (claims & abstract)
X 8 Sheets of Drawings X Formal __ Informal

* * *

---

[2] The commentary at MPEP §503 provides in pertinent part:

* * *

RETURN POSTCARD

If a receipt for any item (e.g., paper or fee) filed in the USPTO is desired, it may be obtained by enclosing with the paper a self-addressed postcard specifically identifying the item. To ensure the receipt of return receipt postcards, users must either: (A) purchase already stamped postcards from the United States Postal Service (USPS) or affix postage stamps to their postcards; or (B) if a postage meter is used, ensure that the meter postmark does not show the date. Any return receipt postcard containing a dated meter postmark may not be delivered by the USPS to the address provided on the postcard.< The USPTO will stamp the receipt date on the postcard and place it in the outgoing mail. A postcard receipt which itemizes and properly identifies the items which are being filed serves as *prima facie* evidence of receipt in the USPTO of all the items listed thereon on the date stamped thereon by the USPTO.

The identifying data on the postcard should be so complete as to clearly identify the item for which >a< receipt is requested. For example, the postcard should identify the applicant's name, application number (if known), confirmation number (if known), filing date, interference number, title of the invention, etc. The postcard should also identify the type of paper being filed, e.g., new application, affidavit, amendment, notice of appeal, appeal brief, drawings, fees, motions, supplemental oath or declaration, petition, etc., and the number of pages being submitted. If a new application is being filed, all parts of the application being submitted should be separately listed on the postcard, e.g., the number of pages of specification (including written description, claims and abstract), number of claims, number of sheets of drawings, number of pages of oath/declaration, number of pages of cover sheet (provisional application).

The postcard receipt will not serve as *prima facie* evidence of receipt of any item which is not adequately itemized on the postcard. For example, merely listing on the postcard "a complete application" or "patent application" will not serve as a proper receipt for each of the required components of an application (e.g., specification (including claims), drawings (if necessary), oath or declaration and the application filing fee) or missing portions (e.g., pages, sheets of drawings) of an application if one of the components or portion of a component is found to be missing by the USPTO. Each separate component should be specifically and properly itemized on the postcard. Furthermore, merely incorporating by reference in the postcard receipt, the items listed in a transmittal letter will not serve as *prima facie* evidence of receipt of those items.

The person receiving the item(s) in the USPTO will check the listing on the postcard against the item(s) being filed to be sure they are properly identified and that all the items listed on the postcard are presently being submitted to the USPTO. If any of the items listed on the postcard are not being submitted to the USPTO, those items will be crossed off and the postcard initialed by the person receiving the items.

Upon return of a postcard receipt from the USPTO, the postcard receipt should be promptly reviewed by the person who filed the items to ensure that every item specifically denoted on the postcard was received by the USPTO. If the postcard receipt has been annotated to indicate that a particular item denoted on the postcard was not received by the USPTO, the postcard receipt will not serve as *prima facie* evidence of receipt of that item in the USPTO.

[3] Notably, while Petitioner's receipt card reflects (apparently correctly) "8" sheets of drawings, Petitioner's transmittal sheet reflects instead only "7" sheets of drawings.

Because Petitioner's receipt card adequately itemized the contents of the application on the receipt card, it is concluded that the application, including eight (8) sheets of drawings were deposited with the Office on 3 November, 2004, and the drawings subsequently were misplaced in the Office.

Accordingly, the application, as filed, is entitled to a filing date.

The "Notice of Incomplete Nonprovisional Application" mailed on 8 February, 2005, was sent in error and is hereby **vacated** to the extent that it stated that the application was incomplete.

The petition is **granted** and the petition fee waived (the petition fee will be credited to Deposit Account 10-0233).

This application is released to OIPE for further processing with a filing date of 3 November, 2004, for the entire application and in particular for the 8 sheets of formal drawings, as described in the specification, using:

- **the 21 pages of specification (description, claims and abstract) deposited on 3 November, 2004; and**
- **the 8 sheets of formal drawings deposited on 8 April, 2005; and**

with direction to OIPE to correct Office records and provide to Petitioner a corrected filing receipt setting forth a filing date of 3 November, 2004, and reflecting therein that 21 pages of specification (description, claims and abstract) and 8 sheets of formal drawings were present on filing.

Telephone inquiries specific to this matter should be directed to the undersigned at (571) 272-3214.

John J. Gillon, Jr.
Senior Attorney
Office of Petitions

UNITED STATES PATENT AND TRADEMARK OFFICE

Commissioner for Patents
United States Patent and Trademark Office
P.O. Box 1450
Alexandria, VA 22313-1450
www.uspto.gov

PARKER INTELLECTUAL PROPERTY LAW OFFICE
536 PANTOPS CENTER
 # 234
CHARLOTTESVILLE VA 22911

COPY MAILED

MAR 2 2 2007

OFFICE OF PETITIONS

In re Application of	:	
Goodrich, David P.	:	
Application No. 10/979,138	:	ON PETITION
Filed: November 3,2 004	:	
Attorney Docket No. GOOD.05.NP	:	

This is a decision on the petition under 37 C.F.R. § 1.137(b), filed March 13, 2007, to revive the above-identified application.

The petition is **GRANTED.**

The petition satisfies the conditions for revival pursuant to the provisions of 37 CFR 1.137(b) in that (1) the reply in the form of a Response to Restriction; (2) the petition fee; and (3) the required statement of unintentional delay have been received. Accordingly, the response has been accepted as having been unintentionally delayed.

This matter is being referred to Technology Center 3700 for further examination on the merits.

Telephone inquiries regarding this decision should be directed to the undersigned at (571) 272-3206.

Liana Walsh
Petitions Examiner
Office of Petitions

UNITED STATES PATENT AND TRADEMARK OFFICE

Commissioner for Patents
United States Patent and Trademark Office
P.O. Box 1450
Alexandria, VA 22313-1450
www.uspto.gov

PARKER INTELLECTUAL PROPERTY LAW OFFICE
536 PANTOPS CENTER
234
CHARLOTTESVILLE VA 22911

COPY MAILED

APR 30 2008

OFFICE OF PETITIONS

In re Application of	:	
GOODRICH, DAVID P.	:	
Application No. 10/979,138	:	DECISION ON PETITION
Filed: 11/03/2004	:	
Attorney Docket No. GOOD.05.NP	:	

This is a decision on the petition under 37 CFR 1.137(a),[1] filed on April 9, 2008, to revive the above-identified application, which is first being treated as a petition under 37 CFR 1.181 to withdraw the holding of abandonment.

On October 16, 2007, the Office mailed a Notice of Non-compliant Amendment, which set an extendable period of one month or thirty days, whichever is longer, to reply. In the absence of a timely filed reply, the application became abandoned on November 17, 2007. The Office mailed a Notice of Abandonment on April 16, 2008.

In the present petition, petitioner asserted that the delay in filing a response to the Notice of Non-compliant Amendment was unavoidable because the practitioner did not receive the Notice. In support of the assertion, petitioner provided the Declaration of practitioner, Sheldon H. Parker.

---

[1] A grantable petition to revive an abandoned application under 37 CFR 1.137(a) must be accompanied by:

(1) The required reply to the outstanding Office action or notice, unless previously filed. In a nonprovisional application abandoned for failure to prosecute, the required reply may be met by the filing of a continuing application. In a nonprovisional utility or plant application filed on or after June 8, 1995, and abandoned for failure to prosecute, the required reply may also be met by the filing of a request for continued examination in compliance with § 1.114. In an application or patent, abandoned or lapsed for failure to pay the issue fee or any portion thereof, the required reply must include payment of the issue fee or any outstanding balance thereof. In an application, abandoned for failure to pay the publication fee, the required reply must include payment of the publication fee.

(2) The petition fee as set forth in 37 CFR 1.17(l);

(3) A showing to the satisfaction of the Director that the entire delay in filing the required reply from the due date for the reply until the filing of a grantable petition pursuant to 37 CFR 1.137(a) was unavoidable; and

(4) Any terminal disclaimer (and fee as set forth in 37 CFR 1.20(d)) required pursuant to 37 CFR 1.137(c)).

Petition to Withdraw the Holding of Abandonment

A review of the record indicates no irregularity in the mailing of the Notice of Non-compliant Amendment, and in the absence of any irregularity in the mailing, there is a strong presumption that the Notice was properly mailed to the address of record. This presumption may be overcome by a showing that the Notice of Non-compliant Amendment was not in fact received.

The Office notes:

> To minimize costs and burdens to practitioners and the Office, the Office has modified the showing required to establish nonreceipt of an Office action. The showing required to establish nonreceipt of an Office communication must include a statement from the practitioner describing the system used for recording an Office action received at the correspondence address of record with the USPTO. The statement should establish that the docketing system is sufficiently reliable. It is expected that the record would include, but not be limited to, the application number, attorney docket number, the mail date of the Office action and the due date for the response.
>
> Practitioner must state that the Office action was not received at the correspondence address of record, and that a search of the practitioner's record(s), including any file jacket or the equivalent, and the application contents, indicates that the Office action was not received. A copy of the record(s) used by the practitioner where the non-received Office action would have been entered had it been received is required.
>
> A copy of the practitioner's record(s) required to show non-receipt of the Office action should include the master docket for the firm. That is, if a three month period for reply was set in the nonreceived Office action, a copy of the master docket report showing all replies docketed for a date three months from the mail date of the nonreceived Office action must be submitted as documentary proof of nonreceipt of the Office action. If no such master docket exists, the practitioner should so state and provide other evidence such as, but not limited to, the following: the application file jacket; incoming mail log; calendar; reminder system; or the individual docket record for the application in question.
>
> The showing outlined above may not be sufficient if there are circumstances that point to a conclusion that the Office action may have been lost after receipt rather than a conclusion that the Office action was lost in the mail (e.g., if the practitioner has a history of not receiving Office actions).

MPEP 711.03(c)(I)(A).

Unfortunately, Mr. Parker did not describe the system used for recording an Office action received at the correspondence address of record with the USPTO or indicate that such system is sufficiently reliable. Furthermore, Mr. Parker did not provide the USPTO with a copy of his records (e.g. the firm's master docket report) showing all replies docketed for a date one month from the mail date of the alleged non-received Notice of Non-compliant Amendment. Thus, the showing of record is

insufficient to warrant withdrawal of the holding of abandonment. The petition to withdraw the holding of abandonment is **dismissed**.

PETITION UNDER 37 CFR 1.137(a)

The Director may revive an abandoned application if the delay in responding to the relevant outstanding Office requirement is shown to the satisfaction of the Director to be "unavoidable".[3] Decisions on reviving abandoned applications on the basis of "unavoidable" delay have adopted the reasonably prudent person standard in determining if the delay was unavoidable:

> The word 'unavoidable' . . . is applicable to ordinary human affairs, and requires no more or greater care or diligence than is generally used and observed by prudent and careful men in relation to their most important business. It permits them in the exercise of this care to rely upon the ordinary and trustworthy agencies of mail and telegraph, worthy and reliable employees, and such other means and instrumentalities as are usually employed in such important business. If unexpectedly, or through the unforeseen fault or imperfection of these agencies and instrumentalities, there occurs a failure, it may properly be said to be unavoidable, all other conditions of promptness in its rectification being present.[4]

The showing of record is inadequate to establish unavoidable delay within the meaning of 35 U.S.C. 133 and 37 CFR 1.137(a).[5] Specifically, an application is "unavoidably" abandoned only where petitioner, or counsel for petitioner, takes all action necessary for a proper response to the outstanding Office action, but through the intervention of unforeseen circumstances, such as failure of mail, telegraph, facsimile, or the negligence of otherwise reliable employees, the response is not timely received in the Office.[6]

Presently, petitioner did not demonstrate that the delay was unavoidable due to non-receipt of the Notice of Non-compliant Amendment. Accordingly, as petitioner has not satisfied the requirements of a grantable petition under 37 CFR 1.137(a), the petition to revive the application due to unavoidable delay is **dismissed**.

Any request for reconsideration of this decision must be submitted within **TWO (2) MONTHS** from the mail date of this decision. The reconsideration request should include a cover letter entitled

---

[3] 35 U.S.C. § 133.

[4] In re Mattullath, 38 App. D.C. 497, 514-15 (1912)(quoting Ex parte Pratt, 1887 Dec. Comm'r Pat. 31, 32-33 (1887)); see also Winkler v. Ladd, 221 F. Supp. 550, 552, 138 USPQ 666, 167-68 (D.D.C. 1963), aff'd, 143 USPQ 172 (D.C. Cir. 1963); Ex parte Henrich, 1913 Dec. Comm'r Pat. 139, 141 (1913). In addition, decisions on revival are made on a "case-by-case basis, taking all the facts and circumstances into account." Smith v. Mossinghoff, 671 F.2d 533, 538, 213 USPQ 977, 982 (D.C. Cir. 1982). Finally, a petition cannot be granted where a petitioner has failed to meet his or her burden of establishing that the delay was "unavoidable." Haines v. Quigg, 673 F. Supp. 314, 316-17, 5 USPQ2d 1130, 1131-32 (N.D. Ind. 1987).

[5] See MPEP 711(c)(III)(C)(2) for a discussion of the requirements for a showing of unavoidable delay.

[6] Ex parte Pratt, 1887 Dec. Comm'r Pat. 31 (Comm'r Pat. 1887).

"Renewed Petition under 37 CFR 1.137(a)." Extensions of time are permitted under 37 CFR 1.136(a). No additional fee is required for filing a renewed petition under 37 CFR 1.137(a).

In the alternative, petitioner may file a petition under 37 CFR 1.137(b) to revive an unintentionally abandoned application.

A grantable petition pursuant to 37 CFR 1.137(b) must be accompanied by:

(1) The reply required to the outstanding Office action or notice, unless previously filed.

(2) The petition fee as set forth in 37 CFR 1.17(m);

(3) A statement that the entire delay in filing the required reply from the due date for the reply until the filing of a grantable petition pursuant to 37 CFR 1.137(b) was unintentional. The Director may require additional information where there is a question whether the delay was unintentional; and

(4) Any terminal disclaimer (and fee set forth in § 1.20(d)) required pursuant to 37 CFR 1.137(d).

Further correspondence with respect to this matter should be addressed as follows:

By mail: Mail Stop Petition
Commissioner for Patents
P.O. Box 1450
Alexandria, VA 22313-1450

By FAX: (571) 273-8300
Attn: Office of Petitions

By hand: Customer Service Window
Randolph Building
401 Dulany Street
Alexandria, VA 22314

Correspondence may also be submitted via the electronic filing system (EFS-Web) of the USPTO.

Telephone inquiries related to this decision may be directed to the undersigned at (571) 272-3211.

Christina T. Donnell

Christina Tartera Donnell
Senior Petitions Attorney
Office of Petitions

UNITED STATES PATENT AND TRADEMARK OFFICE

Commissioner for Patents
United States Patent and Trademark Office
P.O. Box 1450
Alexandria, VA 22313-1450
www.uspto.gov

PARKER INTELLECTUAL PROPERTY LAW OFFICE
536 PANTOPS CENTER
234
CHARLOTTESVILLE VA 22911

COPY MAILED
AUG 07 2008

In re Application of GOODRICH, DAVID P. Application No. 10/979,138 Filed: 11/03/2004 Attorney Docket No. GOOD.05.NP	: : : : :	DECISION ON PETITION

This is a decision on the petition under 37 CFR 1.137(a),[1] filed on July 11, 2008, to revive the above-identified application. This renewed petition is accompanied by a request for an extension of time for response within the first month and fee. Thus, the petition is timely filed.

The petition under 37 CFR 1.137(a) is **granted**.

On October 16, 2007, the Office mailed a Notice of Non-compliant Amendment, which set an extendable period of one month or thirty days, whichever was longer, to reply. In the absence of a timely filed reply, the application became abandoned on November 17, 2007. The Office mailed a Notice of Abandonment on April 16, 2008.

---

[1] A grantable petition to revive an abandoned application under 37 CFR 1.137(a) must be accompanied by:

(1) The required reply to the outstanding Office action or notice, unless previously filed. In a nonprovisional application abandoned for failure to prosecute, the required reply may be met by the filing of a continuing application. In a nonprovisional utility or plant application filed on or after June 8, 1995, and abandoned for failure to prosecute, the required reply may also be met by the filing of a request for continued examination in compliance with § 1.114. In an application or patent, abandoned or lapsed for failure to pay the issue fee or any portion thereof, the required reply must include payment of the issue fee or any outstanding balance thereof. In an application, abandoned for failure to pay the publication fee, the required reply must include payment of the publication fee.

(2) The petition fee as set forth in 37 CFR 1.17(l);

(3) A showing to the satisfaction of the Director that the entire delay in filing the required reply from the due date for the reply until the filing of a grantable petition pursuant to 37 CFR 1.137(a) was unavoidable; and

(4) Any terminal disclaimer (and fee as set forth in 37 CFR 1.20(d)) required pursuant to 37 CFR 1.137(c)).

The petition satisfies the requirements of 37 CFR 1.137(a) in that petitioners have supplied (1) the required reply in the form of an amendment; (2) the petition fee of $255.00; and (3) a showing to the satisfaction of the Director that the entire delay was unavoidable.

The Office notes that petitioners indicated an incorrect application, No. 60/516,700, instead of the intended application, No. 10/979,138, in the header of the transmittal letter accompanying the present renewed petition. The transmittal letter, petition, and request for an extension of time for response, have been copied and moved to the Image File Wrapper of Application No. 10/979,138.

This application is being referred to Technology Center AU 3728 for appropriate action on the reply.

Telephone inquiries concerning this decision should be directed to the undersigned at (571) 272-3211.

Christina Tartera Donnell

Christina Tartera Donnell
Senior Petitions Attorney
Office of Petitions

UNITED STATES PATENT AND TRADEMARK OFFICE

UNITED STATES DEPARTMENT OF COMMERCE
United States Patent and Trademark Office
Address: COMMISSIONER FOR PATENTS
P.O. Box 1450
Alexandria, Virginia 22313-1450
www.uspto.gov

SUGHRUE MION, PLLC
2100 PENNSYLVANIA AVENUE, N.W.
SUITE 800
WASHINGTON, DC 20037

Mail Date: 04/20/2010

Applicant	: Roland Bernard	: DECISION ON REQUEST FOR
Patent Number	: 7572110	: RECALCULATION of PATENT
Issue Date	: 08/11/2009	: TERM ADJUSTMENT IN VIEW
Appliction No	: 10/979,149	: OF WYETH
Filed	: 11/03/2004	:
		:

The Patentee's Request for Recalculation is **DISMISSED.**

This Request is deemed ineligible for consideration for one or more of the following reasons:

(A). The patent for which PTA recalculation is requested is either a design or reissue application or is a reexamination proceeding;

(B). The patent for which PTA recalculation is requested resulted from a utility or plant application filed under 35 USC 111(a) before May 29, 2000 and no CPA filed in the application on/after May 29, 2000;

(C). The patent for which PTA recalculation is requested resulted from an international application in which the international filing date was before May 29, 2000 and no CPA filed in the application on/after May 29, 2000;

(D). The patent for which PTA recalculation is requested issued on/after March 2, 2010;

(E). The Request for Recalculation was filed more than 180 days after the grant date of the patent and the request was not filed within two months of a dismissal of a request for reconsideration of the of the patent term under 37 CFR 1.705(d);

(F). The Request for Recalculation is not solely limited to USPTO pre-Wyeth interpretation of 35 U.S.C. 154(b)(2)(A);

or

(G). A civil action was filed pursuant to 35 U.S.C. 154(b)(4)(A)concerning the same patent at issue in this request.

Patentee may file a reply to this decision dismissing the Request for Recalculation. Patentee must file such reply within one month or thirty days, whichever is longer, of the mail date of the decision dismissing the Request for Recalculation. No fee is required if patentee is asserting in the reply that the dismissal for ineligibility is improper.

Patentee should use document code PET.OP if electronically filing a reply to this dismissal. If the USPTO finds that the request was improperly deemed ineligible, the USPTO will mail applicant a recalculation determination.

Patentee should be aware that in order to preserve the right to review in the United States District Court for the District of Columbia of the USPTO patent term adjustment determination, patentee must ensure that he or she also take the steps required under 35 U.S.C. 154(b)(4)(A). Nothing in the request for recalculation should be construed as providing an alternative time frame for commencing a civil action under 35 U.S.C. 154 (b)(4)(A).

Any questions concerning this decision should be directed to the Office of Patent Legal Administration at 571-272-7702.

UNITED STATES PATENT AND TRADEMARK OFFICE

UNITED STATES DEPARTMENT OF COMMERCE
United States Patent and Trademark Office
Address: COMMISSIONER FOR PATENTS
P.O. Box 1450
Alexandria, Virginia 22313-1450
www.uspto.gov

SUGHRUE MION, PLLC
2100 PENNSYLVANIA AVENUE, N.W.
SUITE 800
WASHINGTON, DC 20037

Mail Date: 05/17/2010

Applicant : Roland Bernard
Patent Number : 7572110
Issue Date : 08/11/2009
Application No : 10/979,149
Filed : 11/03/2004

: NOTICE CONCERNING IMPROPER
: DISMISSAL OF THE REQUEST
: FOR RECALCULATION OF
: PATENT TERM ADJUSTMENT
: IN VIEW OF WYETH

The United States Patent and Trademark Office (USPTO) discovered that in processing the recent recalculation decisions mailed in response to patentee's filed Request for Recalculation of Patent Term Adjustment in view of Wyeth, the USPTO mistakenly dismissed a small number of requests as ineligible. The dismissals involve requests that were filed on February 9-12, 2010, for patents that were granted on August 11, 2009. Any request that was filed on February 8, 2010 was properly deemed eligible for patent term adjustment (PTA) and was recalculated.

Patents meeting the above criteria were eligible because the USPTO was closed February 8-11, 2010, due to a snowstorm. See Closing of the United States Patent and Trademark Office from Monday February, 8, 2010, through Thursday, February 11, 2010, 1352 *Off. Gaz. Pat. Office* 146 (March 16, 2010). The Office considered each day from Monday, February 8, 2010, through Thursday, February 11, 2010, to be a "Federal holiday within the District of Columbia" under 35 U.S.C. § 21(b) and 37 CFR 1.6, 1.7, 1.9, 2.2(d), 2.195 and 2.196. Any actions that were due from Monday, February, 8, 2010, through Thursday, February 11, 2010, (or the preceding Saturday (February 6, 2010) or Sunday (February 7, 2010)) will be considered timely if the action was taken on the next succeeding business day on which the USPTO was open, which was February 12, 2010.

This notice **VACATES** the previous mailed decision in the patented file that deemed patentee ineligible for the request for recalculation. Patentee's request for recalculation is GRANTED.

The patent term adjustment has been determined to be **935** days. The USPTO will *sua sponte* issue a certificate of correction reflecting the amount of PTA days determined by the recalculation.

Prior to the issuance of the certificate of correction, the USPTO will afford patentee an opportunity to be heard and request reconsideration. Accordingly, patentee has **one month or thirty (30) days** from the mail date of this notice, whichever is longer, to file a request for reconsideration of this PTA calculation. See 35 U.S.C. § 154(b)(3)(B)(ii) and 37 CFR 1.322(a)(4).

Patentee should use document code PET.OP if electronically filing a request for reconsideration of this PTA calculation. The patentee must also include the information required by 37 CFR 1.705(b)(2) and the fee required by 37 CFR 1.18(e). If patentee does not file a timely request for reconsideration of this PTA calculation, including the information required by 37 CFR 1.705(b)(2) and the fee required by 37 1.18(e), the USPTO will issue a certificate of correction reflecting the PTA determination noted above.

Patentee should be aware that in order to preserve the right of review of the USPTO's PTA deterimation in the United States District Court for the District of Columbia, patentee must ensure that the steps required under 35 U.S.C. § 154(b)(4) are taken in a timely manner. Nothing in the request for recalculation should be construed as providing an alternative time frame for commencing a civil action under 35 U.S.C. § 154(b)(4).

UNITED STATES PATENT AND TRADEMARK OFFICE

Commissioner for Patents
United States Patent and Trademark Office
P.O. Box 1450
Alexandria, VA 22313-1450
www.uspto.gov

MAR 10 2005

BANNER & WITCOFF
1001 G STREET N W
SUITE 1100
WASHINGTON DC 20001

In re Application of	:
St. Croix et al.	:
Serial No.: 10/979,159	: PETITION TO MAKE SPECIAL
Filed: November 3, 2004	:
Attorney Docket No.: 001107.00511	:

This is in response to applicants' petition filed January 3, 2005, to make the above-identified application special under the provisions of 37 CFR 1.102(d), based on inventions relating to cancer. The $130.00 petition fee as required by 37 CFR 1.17(h) was charged to Deposit Account 19-0733.

Applicants have satisfied the provisions set forth in M.P.E.P. 708.02, X. Therefore, the petition is **GRANTED**.

The application will be forwarded the examiner for action on the merits commensurate with this decision.

Should there be any questions with regard to this letter please contact Marianne C. Seidel by letter addressed to the Director, Technology Center 1600, P.O. Box 1450, Alexandria, VA 22313-1450, or by telephone at 571-272-0584 or by facsimile transmission at the general Office facsimile number, (703) 872-9306.

Marianne C. Seidel

Marianne C. Seidel
Special Program Examiner
Technology Center 1600

UNITED STATES PATENT AND TRADEMARK OFFICE

Commissioner for Patents
United States Patent and Trademark Office
P.O. Box 1450
Alexandria, VA 22313-1450
www.uspto.gov

Date Mailed : 03/16/09

Patent No. : 7403957 B2
Patent Issued : 07/22/08
Docket No. : **00862.002632.1**

Re: Request for Certificate of Correction

Consideration has been given your request for the issuance of a certificate of correction for the above-identified patent under the provisions of Rule(s) 1.322.

Respecting the alleged errors in the documents filed on 12/04/08; please see attachments. **"Therefore, no correction(s) is in order here under United States Codes (U.S.C.) 254 and the Code of Federal Regulation (C.F.R.) 1322."**

In view of the foregoing, your request in this matter is hereby denied.

Lamonte M. Newsome

Lamonte M. Newsome
For Mary Diggs, Supervisor
Decisions & Certificates
Of Correction Branch
(703) 305-8309 or (703)-308-9390 #112

FITZPATRICK CELLA HARPER & SCINTO
30 ROCKEFELLER PLAZA
NEW YORK NY 10112

LMN

SPE RESPONSE FOR CERTIFICATE OF CORRECTION

Paper No.: _____

DATE : 12/15/08

TO SPE OF : ART UNIT 2182

SUBJECT : Request for Certificate of Correction for Appl. No.: 10979181 Patent No.: 7403957 B2

Please respond to this request for a certificate of correction within 7 days.

FOR IFW FILES:

Please review the requested changes/corrections as shown in the **COCIN** document(s) in the IFW application image. No new matter should be introduced, nor should the scope or meaning of the claims be changed.

Please complete the response (see below) and forward the completed response to scanning using document code **COCX**.

FOR PAPER FILES:

Please review the requested changes/corrections as shown in the attached certificate of correction. Please complete this form (see below) and forward it with the file to:

Certificates of Correction Branch (CofC)
South Tower - 9A22
Palm Location 7580
You can fax the Directors/SPE response to 571-270-9990

_____
Certificates of Correction Branch
703-308-9390 ext. _____

Thank You For Your Assistance

The request for issuing the above-identified correction(s) is hereby:
Note your decision on the appropriate box.

- ❑ **Approved** — **All** changes apply.
- ❑ **Approved in Part** — Specify below which changes **do not** apply.
- **xDenied** — State the reasons for denial below.

Comments: Column 2, line 32 – It is not clear which of the two instances of "start" needs to be corrected Column 9, line 20 – "key/-display" cannot be found Column 11, line 49 – the requested change does not appear to make sense TQN:

December 16, 2008

SPE RESPONSE FOR CERTIFICATE OF CORRECTION

/Tariq R. Hafiz/

2182

SPE Art Unit

SPE RESPONSE FOR CERTIFICATE OF CORRECTION

Paper No.: _____

DATE : 04/20/09

TO SPE OF : ART UNIT 2182

SUBJECT : Request for Certificate of Correction for Appl. No.: 10979181 Patent No.: 7403957 B2

Please respond to this request for a certificate of correction within 7 days.

FOR IFW FILES:

Please review the requested changes/corrections as shown in the **COCIN** document(s) in the IFW application image. No new matter should be introduced, nor should the scope or meaning of the claims be changed.

Please complete the response (see below) and forward the completed response to scanning using document code **COCX**.

FOR PAPER FILES:

Please review the requested changes/corrections as shown in the attached certificate of correction. Please complete this form (see below) and forward it with the file to:

Certificates of Correction Branch (CofC)
South Tower - 9A22
Palm Location 7580

You can fax the Directors/SPE response to 571-270-9990

LAMONTE NEWSOME
Certificates of Correction Branch
703-308-9390 ext. 112

Thank You For Your Assistance

The request for issuing the above-identified correction(s) is hereby:
Note your decision on the appropriate box.

xApproved	**All** changes apply.
☐ **Approved in Part**	Specify below which changes **do not** apply.
☐ **Denied**	State the reasons for denial below.

Comments: OK – TQN: 04/20/2009

SPE RESPONSE FOR CERTIFICATE OF CORRECTION

SPE Art Unit

UNITED STATES PATENT AND TRADEMARK OFFICE

Commissioner for Patents
United States Patent and Trademark Office
P.O. Box 1450
Alexandria, VA 22313-1450
www.uspto.gov

COPY MAILED

DEC 1 0 2009

OFFICE OF PETITIONS

G. LINK CO., LTD
3550 BELL ROAD
MINOOKA IL 60447

In re Application of
Chu-Hsien Chou
Application No. 10/979,204
Filed: November 3, 2004
Attorney Docket No. 3289

ON PETITION

This is a decision on the petition under 37 CFR 1.137(b), filed October 2, 2009, to revive the above-identified application.

The petition is **DISMISSED**.

Any further request for reconsideration of this decision must be submitted within TWO (2) MONTHS from the mail date of this decision. Extensions of time under 37 CFR 1.136(a) are permitted. The reconsideration request should include a cover letter entitled "Renewed Petition under 37 CFR 1.137(b)." This is **not** a final agency action within the meaning of 5 U.S.C. § 704.

The application became abandoned for failure to reply in a timely manner to the Notice to File Missing Parts of Nonprovisional Application (Notice), mailed December 10, 2004. A Notice of Abandonment was mailed on November 28, 2006. On October 2, 2009, the present petition was filed.

The above-identified application has been abandoned for an extended period of time. The U.S. Patent and Trademark Office is relying on petitioner's duty of candor and good faith and accepting the statement that "the entire delay in filing the required reply from the due date for the reply until the filing of a grantable petition pursuant to 37 CFR 1.137(b) was unintentional." *See* Changes to Patent Practice and Procedure, 62 Fed. Reg. at 53160 and 53178; 1203 Off. Gaz. Pat. Office at 88 and 103 (responses to comments 64 and 109) (applicant obligated under 37 CFR 10.18 to inquire into the underlying facts and circumstances when providing the statement required by 37 CFR 1.137(b) to the Patent and Trademark Office).

A grantable petition under 37 CFR 1.137(b) must be accompanied by: (1) the required reply, unless previously filed; (2) the petition fee as set forth in 37 CFR 1.17(m); (3) a statement that the entire delay in filing the required reply from the due date for the reply until the filing of a grantable petition pursuant to 37 CFR 1.137(b) was unintentional; and (4) any terminal disclaimer (and fee as set forth in 37 CFR 1.20(d)) required by 37 CFR 1.137(d). Where there is a question as to whether either the

abandonment or the delay in filing a petition under 37 CFR 1.137 was unintentional, the Director may require additional information. See MPEP 711.03(c)(II)(C) and (D).

The petition lacks item (1) above. It is noted that the Notice of December 10, 2004, required $300 for excessive claim fees. The present petition included a fee payment of $100; however, this fee is deficient. Petition should note that over the years patent and trademark fees have increased and any fee amount paid after the effective date must be paid in the revised amount. In view of the fee increase effective October 2, 2008, the balance due for the excessive claim fees has been determined to be $204. There is no authorization to charge any fee deficiency to a deposit account found of record. Accordingly, the petition cannot be granted until the requisite $204 balance has been submitted.

Further correspondence with respect to this matter should be delivered through one of the following mediums:

By mail:	Mail Stop PETITIONS Commissioner for Patents Post Office Box 1450 Alexandria, VA 22313-1450
By hand:	Customer Service Window Mail Stop Petitions Randolph Building 401 Dulany Street Alexandria, VA 22314
By fax:	(571) 273-8300 ATTN: Office of Petitions
By internet:	EFS-Web[1]

Any questions concerning this matter may be directed to the undersigned at (571) 272-3204.

Sherry D. Brinkley
Petitioner Examiner
Office of Petitions

---

1 www.uspto.gov/ebc/efs_help.html (for help using EFS-Web call the Patent Electronic Business Center at (866) 217-9197)

UNITED STATES PATENT AND TRADEMARK OFFICE

Commissioner for Patents
United States Patent and Trademark Office
P.O. Box 1450
Alexandria, VA 22313-1450
www.uspto.gov

G. LINK CO., LTD
3550 BELL ROAD
MINOOKA, IL 60447

MAILED

APR 15 2010

OFFICE OF PETITIONS

In re Application of
Chu-Hsien Chou
Application No. 10/979,204
Filed: November 3, 2004
Attorney Docket No. KH-USI 46

ON PETITION

This is a decision in response to the renewed petition, filed January 15, 2010, to revive the above-identified application under the provisions of 37 CFR 1.137(b).

The petition is **GRANTED**.

The application became abandoned for a failure to timely respond to a Notice to File Missing Parts (Notice) mailed December 10, 2004. A Notice of Abandonment was mailed on November 28, 2006. On October 2, 2009, a petition to revive under 37 CFR 1.137(b) was filed; however, the petition was dismissed in a decision mailed December 10, 2009. In response, on January 15, 2010, the present petition was filed.

The petition satisfies the requirements of 37 CFR 1.137(b) in that petitioner has supplied (1) the required reply; (2) the petition fee of $810; and (3) an adequate statement of unintentional delay[1].

The application is being referred to the Office of Patent Application Processing (OPAP) for further pre-examination processing.

Telephone inquires related to this decision should be directed to the undersigned at (571) 272-3204. Telephone inquiries related to processing at OPAP should be directed to their hotline at (571) 272-4000.

Sherry D. Brinkley
Petitions Examiner
Office of Petitions

[1] 37 CFR 1.137(b)(3) requires a statement that the entire delay in filing the required reply from the due date for the reply until the filing of a grantable petition pursuant to 37 CFR 1.137(b) was unintentional While this application has been abandoned for an extended period of time, the U.S. Patent and Trademark Office is relying on petitioner's duty of candor and good faith and accepting the statement that "the entire delay in filing the required reply from the due date for the reply until the filing of a grantable petition pursuant to 37 CFR 1.137(b) was unintentional." *See* Changes to Patent Practice and Procedure, 62 Fed. Reg., at 53160 and 53178; 1203 Off. Gaz. Pat. Office, at 88 and 103 (responses to comments 64 and 109) (applicant obligated under 37 CFR 10.18 to inquire into the underlying facts and circumstances when providing the statement required by 37 CFR 1.137(b) to the U.S. Patent and Trademark Office).

UNITED STATES PATENT AND TRADEMARK OFFICE

UNITED STATES DEPARTMENT OF COMMERCE
United States Patent and Trademark Office
Address: COMMISSIONER FOR PATENTS
P.O. Box 1450
Alexandria, Virginia 22313-1450
www.uspto.gov

MCDERMOTT WILL & EMERY LLP
600 13TH STREET, N.W.
WASHINGTON, DC 20005-3096

Mail Date: 05/03/2010

Applicant	: Kazuhisa Tanaka	: DECISION ON REQUEST FOR
Patent Number	: 7657681	: RECALCULATION of PATENT
Issue Date	: 02/02/2010	: TERM ADJUSTMENT IN VIEW
Application No	: 10/979,223	: OF WYETH AND NOTICE OF INTENT TO
Filed	: 11/03/2004	: ISSUE CERTIFICATE OF CORRECTION
		:

The Request for Recalculation is **GRANTED** to the extent indicated.

The patent term adjustment has been determined to be **1144** days. The USPTO will *sua sponte* issue a certificate of correction reflecting the amount of PTA days determined by the recalculation.

Prior to the issuance of the certificate of correction, the USPTO will afford patentee an opportunity to be heard and request reconsideration. Accordingly, patentee has **one month or thirty (30) days**, whichever is longer, to file a request for reconsideration of this patent term adjustment calculation. See 35 U.S.C. 154(b)(3)(B)(ii) and 37 CFR 1.322(a)(4). No extensions of time will be granted under 37 CFR 1.136.

Patentee should use document code PET.OP if electronically filing a request for reconsideration of this patent term adjustment calculation. The patentee must also include the information required by 37 CFR 1.705(b)(2) and the fee required by 37 CFR 1.18(e). If patentee does not file a timely request for reconsideration of this patent term adjustment calculation including the information required by 37 CFR 1.705(b)(2) and the fee required by 37 CFR 1.18(e), the USPTO will issue a certificate of correction reflecting the PTA determination noted above.

Patentee should be aware that in order to preserve the right to review in the United States District Court for the District of Columbia of the USPTO patent term adjustment determination, patentee must ensure that he or she also take the steps required under 35 U.S.C. 154(b)(4)(A) in a timely manner. Nothing in the request for recalculation should be construed as providing an alternative time frame for commencing a civil action under 35 U.S.C. 154(b)(4)(A).

Any questions concerning this decision should be directed to the Office of Patent Legal Administration at 571-272-7702.

UNITED STATES PATENT AND TRADEMARK OFFICE

COMMISSIONER FOR PATENTS
UNITED STATES PATENT AND TRADEMARK OFFICE
P.O. BOX 1450
ALEXANDRIA, VA 22313-1450
www.uspto.gov

RADER FISHMAN & GRAUER PLLC
LION BUILDING
1233 20TH STREET N.W., SUITE 501
WASHINGTON, DC 20036

COPY MAILED

FEB 23 2006

OFFICE OF PETITIONS

ON PETITION

In re Application of	:	
Tsutomu Oosaka	:	
Application No. 10/979,249	:	
Filed: November 3, 2004	:	
Attorney Docket No.: SON-3130	:	

This is a decision on the petition, filed February 6, 2006, under 37 CFR 1.313(c)(2) to withdraw the above-identified application from issue after payment of the issue fee.

The petition is **GRANTED**.

The above-identified application is withdrawn from issue for consideration of a submission under 37 CFR 1.114 (request for continued examination). See 37 CFR 1.313(c)(2).

Petitioner is advised that the issue fee paid on December 21, 2005, in the above-identified application cannot be refunded. If, however, the above-identified application is again allowed, petitioner may request that it be applied towards the issue fee required by the new Notice of Allowance. [1]

Telephone inquiries relating to this decision should be directed to the undersigned at (571) 272-3204.

The application is being referred to Technology Center AU 2818 for further processing of the request for continued examination under 37 CFR 1.114.

Sherry D. Brinkley
Petitions Examiner
Office of Petitions

[1]The request to apply the issue fee to the new Notice may be satisfied by completing and returning the new Issue Fee Transmittal Form PTOL-85(b), which includes the following language thereon: "Commissioner for Patents is requested to apply the Issue Fee and Publication Fee (if any) or re-apply any previously paid issue fee to the application identified above." Petitioner is advised that, whether a fee is indicated as being due or not, the Issue Fee Transmittal Form **must** be completed and timely submitted to avoid abandonment. Note the language in bold text on the first page of the Notice of Allowance and Fee(s) Due (PTOL-85).

UNITED STATES PATENT AND TRADEMARK OFFICE

COMMISSIONER FOR PATENTS
UNITED STATES PATENT AND TRADEMARK OFFICE
P.O. BOX 1450
ALEXANDRIA, VA 22313-1450
www.uspto.gov

MILTON S. GERSTEIN
MUCH SHELIST FREED DENENBERG AMENT&RUBENSTEIN,PC
191 N. WACKER DRIVE
SUITE 1800
CHICAGO IL 60606-1615

MAIL

FEB 2 3 2005

DIRECTOR OFFICE
TECHNOLOGY CENTER 2600

In re Application of :
Daniel Giacopelli, et al. :
Application No. 10/979,270 : DECISION ON PETITION
Filed: November 2, 2004 : TO MAKE SPECIAL
For: **METHOD AND APPARATUS FOR INTERFACING ANALOG DATA DEVICES TO A CELLULAR TRANSCEIVER WITH ANALOG MODEM CAPABILITY** :

This is a decision on the petition filed January 27, 2005 under Manual of Patent Examination Procedure §708.02, VIII requesting accelerated examination.

The petition under Manual of Patent Examination Procedure §708.02, VIII, must:
(1) be filed prior to receiving any examination by the examiner,
(2) be accompanied by the required fee- $130,
(3) the claims should be directed to a single invention (if it is determined that the claims pertain to more than one invention, then applicant will have to make an election without traverse or forfeit accelerated examination status),
(4) state that a pre-examination search was made, and fully discuss the search method employed, such as classes and subclasses searched, publications, Chemical abstracts, patents, etc. A search made by a foreign patent office satisfies this requirement,
(5) be accompanied by a copy of each of the references most closely related to the subject matter encompassed by the claims if said references are not already of record,
(6) fully discuss the references, pointing out with the particularity required by 37 C.F.R. §1.111 (b) and (c), how the claimed subject matter is patentable over the references.

The petitioner meets all the above-listed requirements. Accordingly, the petition is **GRANTED**.

The application will retain its special status throughout its entire prosecution, including any appeal to the Board of Patent Appeals and Interferences, subject only to diligent prosecution by the applicant. The application file is being forwarded to the examiner for appropriate action in due course.

Krista Zele
Special Program Examiner
Technology Center 2600
Communications

UNITED STATES PATENT AND TRADEMARK OFFICE

Commissioner for Patents
United States Patent and Trademark Office
P.O. Box 1450
Alexandria, VA 22313-1450
www.uspto.gov

SCHWEGMAN, LUNDBERG & WOESSNER, PA
P.O. BOX 2938
MINNEAPOLIS, MN 55402

COPY MAILED

JUN 19 2008

OFFICE OF PETITIONS

In re Application of	:	
Fung-Jou C, et al.	:	
Application No. 10/979,301	:	DECISION ON PETITION
Filed: November 2, 2004	:	TO WITHDRAW
Attorney Docket No. 1443.177US1	:	FROM RECORD
	:	

This is a decision on the Request to Withdraw as attorney or agent of record under 37 C.F.R. § 1.36(b), filed December 5, 2007.

The request is **APPROVED**.

A grantable request to withdraw as attorney/agent of record must be signed by every attorney/agent seeking to withdraw or contain a clear indication that one attorney is signing on behalf of another/others. A request to withdraw will not be approved unless at least 30 (thirty) days would remain between the date of approval and the later of the expiration date of a time to file a response or the expiration date of the maximum time period which can be extended under 37 C.F.R. § 1.136(a).

The request was signed by Barbara J. Clark on behalf of all attorneys of record who are associated with customer No. 45835.

All attorneys/agents associated with the Customer Number 45835 have been withdrawn.

Applicant is reminded that there is no attorney of record at this time.

The request to change the correspondence of record is not acceptable as the requested correspondence address is not that of: (1) the first named signing inventor; or (2) an intervening assignee of the entire interest under 37 C.F.R 3.71. All future communications from the Office will be directed to the first named signing inventor at the first copied address below until otherwise properly notified by the applicant.

In order to request or take action in a patent matter, the assignee must establish its ownership of the patent to the satisfaction of the Director. In this regard, a Statement under 37 CFR 3.73(b) must

have either: (i) documentary evidence of a chain of title from the original owner to the assignee (*e.g.*, copy of an executed assignment), and a statement affirming that the documentary evidence of the chain of title from the original owner to the assignee was or concurrently is being submitted for recordation pursuant to § 3.11; or (ii) a statement specifying where documentary evidence of a chain of title from the original owner to the assignee is recorded in the assignment records of the Office (*e.g.*, reel and frame number).

There are no pending Office actions at the present time.

Telephone inquiries concerning this decision should be directed to undersigned at 571-272-1642

April Wise

April M. Wise
Petitions Examiner
Office of Petitions

cc: FUNG-JOU CHEN
3216 WHITE BIRCH LANE
APPLETON, WI 54915

cc: NANCY KLEMBUS
KIMBERLY-CLARK WORLDWIDE, INC.
1400 HOLCOMB BRIDGE ROAD
BUILDING 200
ROSWELL, GA 30076-2199

UNITED STATES PATENT AND TRADEMARK OFFICE

UNITED STATES DEPARTMENT OF COMMERCE
United States Patent and Trademark Office
Address: COMMISSIONER FOR PATENTS
P.O. Box 1450
Alexandria, Virginia 22313-1450
www.uspto.gov

APPLICATION NUMBER	FILING OR 371(C) DATE	FIRST NAMED APPLICANT	ATTY. DOCKET NO./TITLE
10/979,301	11/02/2004	Fung-jou Chen	1443.177US1

CONFIRMATION NO. 4597

POWER OF ATTORNEY NOTICE

21186
SCHWEGMAN, LUNDBERG & WOESSNER, P.A.
P.O. BOX 2938
MINNEAPOLIS, MN 55402

OC000000030536232

Date Mailed: 06/18/2008

NOTICE REGARDING CHANGE OF POWER OF ATTORNEY

This is in response to the Power of Attorney filed 12/05/2007.

- The withdrawal as attorney in this application has been accepted. Future correspondence will be mailed to the new address of record. 37 CFR 1.33.

/amwise/

Office of Data Management, Application Assistance Unit (571) 272-4000, or (571) 272-4200, or 1-888-786-0101

UNITED STATES PATENT AND TRADEMARK OFFICE

Commissioner for Patents
United States Patent and Trademark Office
P.O. Box 1450
Alexandria, VA 22313-1450
www.uspto.gov

THE PROCTER & GAMBLE COMPANY
INTELLECTUAL PROPERTY DIVISION
WINTON HILL TECHNICAL CENTER
BOX 161
6110 CENTER HILL AVE
CINCINNATI OH 45224

COPY MAILED

SEP 0 9 2005

OFFICE OF PETITIONS

In re Application of	:	
Moreyra, et al.	:	DECISION ACCORDING STATUS
Application No. 10/979,329	:	UNDER 37 CFR 1.47(a)
Filed: November 2, 2004	:	
Attorney Docket No. 9428	:	

This is in response to the petition under 37 CFR 1.47(a), filed July 15, 2005.

The petition under 37 CFR 1.47(a) is **GRANTED**.

The above-identified application was filed on November 2, 2004, without an executed oath or declaration. Accordingly, on February 16, 2005, the Initial Patent Examination Division mailed a Notice to File Missing Parts of Nonprovisional Application, requiring an executed oath or declaration, together with a surcharge for its late filing.

In reply, applicant filed the instant petition on July 15, 2005, made timely with a three month extension of time. Accompanying the petition was a declaration executed by inventors Abel Ennio

Moreyra, Alan Chaney Wilson, and Owen Rickford Carryl, with the signature block for Ashraf M. Koraym left blank.

A grantable petition under 37 CFR 1.47(a) requires: (1) proof that the non-signing inventor(s) cannot be reached or refuses to sign the oath or declaration after having been presented with the application papers (specification, claims and drawings); (2) an acceptable oath or declaration in compliance with 37 CFR 1.63; (3) the petition fee; and (4) a statement of the last known address of the non-signing inventor(s).

On petition, Rule 47 applicant has included a statement from a person having firsthand knowledge, attesting that Koraym made an oral refusal to sign the declaration during a telephone conversation on March 30, 2005. While the record does not make it clear that Koraym was ever presented with the application papers, it is concluded based upon the facts presented on petition that Koraym knew what he was being asked to sign.

While Rule 47 applicant has not provided a statement of the last known address of the nonsigning inventor, that address is presumed to be the address listed on the declaration.

On petition, Rule 47 applicant has satisfied the requirements of 37 CFR 1.47(a). The declaration submitted with the petition has been determined to be in compliance with 37 CFR 1.63. Accordingly, the above-identified application is hereby <u>accorded Rule 1.47(a) status</u>.

Pursuant to 37 CFR 1.47(c), this Office will forward notice of this application's filing to the address provided on the declaration. Notice of the filing of this application will also be published in the Official Gazette.

The application file is being forwarded to Group Art Unit 1623 for docketing and examination in due course.

Telephone inquiries related to this decision may be directed to the undersigned at (571)272-3207.

Cliff Congo
Petitions Attorney
Office of Petitions

UNITED STATES PATENT AND TRADEMARK OFFICE

Commissioner for Patents
United States Patent and Trademark Office
P.O. Box 1450
Alexandria, VA 22313-1450
www.uspto.gov

ASHRAF M KORAYM
8-19 CIVIC CENTER DR
EAST BRUNSWICK NJ 08816

COPY MAILED

SEP 09 2005

OFFICE OF PETITIONS

In re Application of :
Abel Ennio Moreyra, Ashraf M. Koraym, :
Alan Chaney Wilson, Owen Rickford :
Carryl :
Application No. 10/979,329 :
Filed: November 2, 2004
Title: Compositions, Kits, and Methods for the Treatment of Conditions Associated with Elevated Cholesterol Levels

LETTER

Dear Mr. Koraym:

You are named as a joint inventor in the above-identified United States patent application filed under the provisions of 35 USC 116 (United States Code) and 37 CFR 1.47(a), Rules of Practice in Patent Cases. Should a patent be granted on the application you will be designated therein as a joint inventor.

As a named inventor you are entitled to inspect any paper in the file wrapper of the application, order copies of all or any part thereof (at a prepaid cost per 37 CFR 1.19) or make your position of record in the application. Alternatively, you may arrange to do any of the preceding through a registered patent attorney or agent presenting written authorization from you. If you care to join the application, agent of record (see below) would presumably assist you. Joining in the application would entail the filing of an appropriate oath or declaration by you pursuant to 37 CFR 1.63.

Telephone inquiries regarding this communication should be directed to Petitions Attorney Cliff Congo at (571)272-3207. Requests for information regarding your application should be directed to the File Information Unit at (703) 308-2733. Information regarding how to pay for and order a copy of the application, or a specific paper in the application, should be directed to the Certification Division at (703) 308-9726 or 1-800-972-6382 (outside the Washington D.C. area).

Cliff Congo
Petitions Attorney
Office of Petitions

Kelly L. McDow-Dunham
Procter & Gamble
Winton Hill Technical Center
Box 161
6110 Center Hill Ave
Cincinnati, Ohio 45224
phone: 513-622-0159

UNITED STATES PATENT AND TRADEMARK OFFICE

Commissioner for Patents
United States Patent and Trademark Office
P.O. Box 1450
Alexandria, VA 22313-1450
www.uspto.gov

Trexler, Bushnell, Giangiorgi,
Blackston & Marr, LTD.
105 West Adams Street
Suite 3600
Chicago, IL 60603

COPY MAILED

APR 1 4 2008

OFFICE OF PETITIONS

In re Application of	:	
Philip John Baker	:	
Application No. 10/979,332	:	DECISION ON PETITION
Filed: November 2, 2004	:	TO WITHDRAW
Attorney Docket No. 198/42225/Case 516	:	FROM RECORD
	:	

This is a decision on the Request to Withdraw as attorney or agent of record under 37 C.F.R. § 1.36(b), filed October 18, 2007.

The request is **APPROVED**.

A grantable request to withdraw as attorney/agent of record must be signed by every attorney/agent seeking to withdraw or contain a clear indication that one attorney is signing on behalf of another/others. A request to withdraw will not be approved unless at least 30 (thirty) days would remain between the date of approval and the later of the expiration date of a time to file a response or the expiration date of the maximum time period which can be extended under 37 C.F.R. § 1.136(a).

The request was signed by James R. Foley on behalf of all attorneys of record. All attorneys/agents have been withdrawn. Applicant is reminded that there is no attorney of record at this time.

All future correspondence will be directed to the first named inventor Philip John Baker at the address indicated below.

The application became abandoned for failure to timely respond to the Office action mailed May

Telephone inquiries concerning this decision should be directed to Terri Williams at 571-272-2991.

T. Williams

Terri Williams
Petitions Examiner
Office of Petitions

cc: **Philip John Baker**
49 Windsor Walk
South Anston
Sheffield, S25 5EL
England

UNITED STATES PATENT AND TRADEMARK OFFICE

UNITED STATES DEPARTMENT OF COMMERCE
United States Patent and Trademark Office
Address: COMMISSIONER FOR PATENTS
P.O. Box 1450
Alexandria, Virginia 22313-1450
www.uspto.gov

APPLICATION NUMBER	FILING OR 371(C) DATE	FIRST NAMED APPLICANT	ATTY. DOCKET NO./TITLE
10/979,332	11/02/2004	Philip John Baker	198/42225/Case 516

CONFIRMATION NO. 3762

POWER OF ATTORNEY NOTICE

OC000000029371739

279
TREXLER, BUSHNELL, GIANGIORGI,
BLACKSTONE & MARR, LTD.
105 WEST ADAMS STREET
SUITE 3600
CHICAGO, IL 60603

Date Mailed: 04/11/2008

NOTICE REGARDING CHANGE OF POWER OF ATTORNEY

This is in response to the Power of Attorney filed 10/18/2007.

- The withdrawal as attorney in this application has been accepted. Future correspondence will be mailed to the new address of record. 37 CFR 1.33.

/tswilliams/

Office of Data Management, Application Assistance Unit (571) 272-4000, or (571) 272-4200, or 1-888-786-0101

UNITED STATES PATENT AND TRADEMARK OFFICE

Commissioner for Patents
United States Patent and Trademark Office
P.O. Box 1450
Alexandria, VA 22313-1450
www.uspto.gov

BLAKELY SOKOLOFF TAYLOR & ZAFMAN
1279 OAKMEAD PARKWAY
SUNNYVALE CA 94085-4040

COPY MAILED

JAN 07 2008

OFFICE OF PETITIONS

In re Application of	:	
Michael J. Meyer	:	
Application No. 10/979,340	:	DECISION GRANTING PETITION
Filed: November 1, 2004	:	UNDER 37 CFR 1.137(b)
Attorney Docket No. 026517-0037P	:	

This is a decision on the petition under 37 CFR 1.137(b), filed June 15, 2007, to revive the above-identified application.

The petition is **GRANTED**.

The petition satisfies the conditions for revival pursuant to the provisions of 37 CFR 1.137(b) in that (1) the reply in the form of an amendment; (2) the petition fee; and (3) the required statement of unintentional delay have been received. Accordingly, the reply to the Nonfinal Rejection of July 21, 2006, is accepted as having been unintentionally delayed.

Telephone inquiries concerning this decision should be directed to the undersigned at (571) 272-3208.

This matter is being referred to Technology Center AU 2116.

Karen Creasy

Karen Creasy
Petitions Examiner
Office of Petitions

UNITED STATES PATENT AND TRADEMARK OFFICE

Commissioner for Patents
United States Patent and Trademark Office
P.O. Box 1450
Alexandria, VA 22313-1450
www.uspto.gov

CHRISTIE, PARKER & HALE, LLP
PO BOX 7068
PASADENA CA 91109-7068

COPY MAILED
AUG 0 2 2006
OFFICE OF PETITIONS

In re Application of	:
Carruth	:
Application No. 10/979,343	: ON PETITION
Filed: November 1,2004	:
For: HYBRID TEA ROSE PLANT NAMED 'WEKLEZPAT'	:

This is a decision on (1) the petition filed April 6, 2006, under 37 CFR 1.181 to withdraw the holding of abandonment, and on the petition filed June 23, 2006, under 37 CFR 1.137(b) to revive the above-identified application.

The petition considered under 37 CFR 1.181 is **dismissed.**

The petition considered under 37 CFR 1.137(b) is **granted.**

This application became abandoned for failure to remit the issue fee on or before March 16, 2006, as required by the Notice of Allowance and base issue Fee Due mailed November 16, 2005. While the fee transmittal was filed December 15, 2005, which authorized accessing of counsel's deposit account, that account, when accessed, had insufficient fees to cover the amount owed. Accordingly, this application became abandoned February 16, 2006. A Notice of Abandonment was mailed March 20, 2006.

For the reason given above, coupled with petitioner's acknowledgment in the petition filed June 23, 2006, that the deposit account lacked adequate fees, the holding of abandonment is proper and will not be withdrawn. Nevertheless, the statement in the petition under 37 CFR 1.137(b) asserting the delay unintentional is accepted. This application is revived and restored to pending status.

This allowed file is being referred to the Office of Publications for processing into a patent.

Telephone inquiries related to this communication should be directed to the undersigned at (571) 272-3217.

Brian Hearn
Petitions Examiner
Office of Petitions

UNITED STATES PATENT AND TRADEMARK OFFICE

Commissioner for Patents
United States Patent and Trademark Office
P.O. Box 1450
Alexandria, VA 22313-1450
www.uspto.gov

GARLICK HARRISON & MARKISON
P.O. BOX 160727
AUSTIN TX 78716-0727

MAILED

MAY 07 2010

OFFICE OF PETITIONS

In re Application of
Christopher J. Hansen et al.
Application No. 10/979,368
Filed: November 1, 2004
Attorney Docket Number: BP3978

ON PETITION

This is a decision on the petition, filed March 11, 2010 under 37 CFR 1.137(b)[1], to revive the above identified application.

The petition is **GRANTED**.

This application became abandoned February 22, 2010 for failure to timely pay the issue fee in response to the Notice of Allowance mailed February 19, 2010 which set a three month statutory period for response. Accordingly, the Notice of Abandonment was mailed March 8, 2010.

All other requirements of 37 CFR 1.137(b) having now been met, this matter is being referred to the Publishing Division to be processed into a patent.

Telephone inquiries concerning this matter may be directed to the undersigned Petitions Attorney at (571) 272-3212.

Patricia Faison-Ball

Patricia Faison-Ball
Senior Petitions Attorney
Office of Petitions

---

[1]Effective December 1, 1997, the provisions of 37 CFR 1.137(b) now provide that where the delay in reply was unintentional, a petition may be filed to revive an abandoned application or a lapsed patent pursuant to 37 CFR 1.137(b). A grantable petition filed under the provisions of 37 CFR 1.137(b) must be accompanied by:

(1) the required reply, unless previously filed. In a nonprovisional application abandoned for failure to prosecute, the required reply may be met by the filing of a continuing application. In an application or patent, abandoned or lapsed for failure to pay the issue fee or any portion thereof, the required reply must be the payment of the issue fee or any outstanding balance thereof.

(2) the petition fee as set forth in 37 CFR 1.17(m);

(3) a statement that the entire delay in filing the required reply from the due date for the reply until the filing of a grantable petition pursuant to 37 CFR 1.137(b) was unintentional. The Commissioner may required additional information where there is a question whether the delay was unintentional; and

(4) any terminal disclaimer (and fee as set forth in 37 CFR 1.20(d)) required pursuant to 37 CFR 1.137(c)).

03 OCT 2005

UNITED STATES PATENT AND TRADEMARK OFFICE

Commissioner for Patents
United States Patent and Trademark Office
P.O. Box 1450
Alexandria, VA 22313-1450
www.uspto.gov

LUMEN INTELLECTUAL PROPERTY SERVICES, INC.
2345 YALE STREET, 2ND FLOOR
PALO ALTO CA 94306

In re Application of	:	
SASAHARA, Jun et al.	:	DECISION ON
Application No.: 10/979,376	:	
Filing Date: 28 October 2004	:	PETITION
Attorney Docket No.: HON-107/PCT/US	:	
For: FUEL CELL ASSEMBLY ... METHOD	:	UNDER 37 CFR 1.182
THEREFOR	:	

This decision is in response to applicants' "Petition Under 37 CFR 1.182," filed on 29 April 2005. Applicants have not provided the fee for the petition.

BACKGROUND

On 02 May 2003, applicants filed international application PCT/JP03/05631, which claimed a priority date of 09 May 2002. Accordingly, the thirty-month period for paying the basic national fee in the United States expired at midnight on 09 November 2004.

On 28 October 2004, applicants filed utility patent application transmittal, which was accompanied by, *inter alia*, utility filing fee and a specification.

On 10 December 2004, the Office mailed Notification to File Missing Parts of Nonprovisional Application.

On 07 February 2005, applicants responded to the Notification and supplied a preliminary amendment.

On 29 April 2005, applicants filed the instant petition.

DISCUSSION

Applicants' petition will not be addressed on the merits as applicants did not furnish the $400 petition fee.

A review of the above-captioned application file verifies that it was properly filed under 35 U.S.C. 111(a). The USPTO Notice published in the Official Gazette at 1077 OG 13 entitled "Minimum Requirements for Acceptance of Applications Under 35 U.S.C. 371 (the National Stage of PCT)" states, in part, the following:

> The Patent and Trademark Office is continuing to receive application papers which do not clearly identify whether the papers (1) are being submitted to enter the national stage of the Patent Cooperation Treaty (PCT) under 35 U.S.C. 371 or (2) are being filed as a regular national application under 35 U.S.C. 111 . . .

If there are any conflicting instructions as to which sections of the statute (371 or 111) is intended the application will be accepted under 35 U.S.C. 111.

Here, the reference to 37 CFR 1.53(b) at the top of the transmittal letter filed on 28 October 2004, is an instruction to process the application pursuant to 35 U.S.C. 111(a). Thus, the application was correctly accepted as a filing under 35 U.S.C. 111(a) pursuant to 1077 OG 13.

U.S. Statutes and Regulations do not make specific provision for conversion of the application to a national phase and as such the Office does not grant such petitions for conversion as a mere matter of course. The Office will only grant such petitions upon a showing by applicant of sufficient cause (e.g., the loss of patent rights) where no other remedy is available.

CONCLUSION

As discussed above, the petition under 37 CFR 1.182 is **DISMISSED** without prejudice.

This application is being forwarded to Technology Center 1700 for continued processing.

Erin P. Thomson

Erin P. Thomson
Attorney Advisor
PCT Legal Administration

Telephone: (571)272-3292
Facsimile: (571)273-0459

2 3 OCT 2008

UNITED STATES PATENT AND TRADEMARK OFFICE

Commissioner for Patents
United States Patent and Trademark Office
P.O. Box 1450
Alexandria, VA 22313-1450
www.uspto.gov

LUMEN PATENT FIRM, INC.
2345 YALE STREET
SECOND FLOOR
PALO ALTO, CA 94306

In re Application of	:	
SASAHARA, et al.	:	
Application No. 10/979,376	:	DECISION ON PETITION
Filed: 28 October 2004	:	UNDER 37 CFR 1.78(a)(3) and 1.78(a)(6)
Attorney Docket No. HON-107/PCT/US	:	

This is a decision on the petitions under 37 CFR §§ 1.78(a)(3) and 1.78(a)(6), filed 28 July 2008, to accept an unintentionally delayed claim under 35 U.S.C. §§120, 365(c) and 119(e) for the benefit of the prior-filed applications set forth in the concurrently filed amendment.

The petition is **GRANTED**.

The present nonprovisional application was filed after November 29, 2000, and the claim herein for the benefit of priority to the prior-filed applications is submitted after expiration of the period specified in 37 CFR 1.78(a)(2)(ii) and 1.78(a)(5)(ii). Therefore, this is a proper petition under 37 CFR 1.78(a)(3) and 1.78(a)(6).

A petition for acceptance of a claim for late priority under 37 CFR §§ 1.78(a)(3) and 1.78(a)(6) is only applicable to those applications filed on or after November 29, 2000. Further, the petition is appropriate only after the expiration of the period specified in 37 CFR §§ 1.78(a)(2)(ii) and 1.78(a)(5)(ii). In addition, the petition under 37 CFR §§ 1.78(a)(3) and 1.78(a)(6) must be accompanied by:

(1) the reference required by 35 U.S.C. §§ 120 and 119(e) and 37 CFR §§ 1.78(a)(2)(i) and 1.78(a)(5)(i) of the prior-filed application, unless previously submitted;

(2) the surcharge set forth in § 1.17(t); and

(3) a statement that the entire delay between the date the claim was due under 37 CFR §§ 1.78(a)(2)(ii) and 1.78(a)(5)(ii) and the date the claim was filed was unintentional. The Director may require additional where there is a question whether the delay was unintentional.

The petition complies with the requirements for a grantable petition under 37 CFR §§1.78(a)(3)

and 1.78(a)(6) in that (1) a reference to the prior-filed applications has been included in an amendment to the first sentence of the specification following the title, as provided by 37 CFR §§ 1.78(a)(2)(iii) and 1.78(a)(5)(iii); (2) the surcharge fee required by 37 CFR 1.17(t) has been submitted; and (3) the petition contains a proper statement of unintentional delay. Accordingly, having found that the petition for acceptance of an unintentionally delayed claim for the benefit of priority under 35 U.S.C. §§ 120 and 119(e) to the prior-filed applications satisfies the conditions of 37 CFR §§ 1.78(a)(3) and 1.78(a)(6), the petition is granted.

The granting of the petition to accept the delayed benefit claim to the prior-filed applications under 37 CFR §§ 1.78(a)(3) and 1.78(a)(6) should <u>not</u> be construed as meaning that this application is entitled to the benefit of the filing date of the prior-filed applications. In order for this application to be entitled to the benefit of the prior-filed applications, all other requirements under 35 U.S.C. §§120 and 365(c) and 1.78(a)(1) and (a)(2) and under 35 U.S.C. §119(e) and 37 CFR 1.78(a)(4) and (a)(5) must be met. Similarly, the fact that the corrected Filing Receipt accompanying this decision on petition includes the prior-filed applications should <u>not</u> be construed as meaning that applicant is entitled to the claim for benefit of priority to the prior-filed applications noted thereon. Accordingly, the examiner will, in due course, consider this benefit claim and determine whether this application is entitled to the benefit of the earlier filing date.

A corrected Filing Receipt, which includes the priority claim to the prior-filed applications, accompanies this decision on petition.

Any inquiries concerning this decision may be directed to the Erin Thomson at (571) 272-3292. All other inquiries concerning either the examination procedures or status of the application should be directed to the Technology Center.

This matter is being referred to Technology Center Art Unit 1795 for appropriate action on the amendment filed 28 July 2008, including consideration by the examiner of applicant's entitlement to claim benefit of priority under 35 USC 365(c) and 35 U.S.C. § 120 and § 119(e) to the prior-filed international and provisional applications.

Boris Milef
Legal Examiner
Office of PCT Legal Administration

UNITED STATES PATENT AND TRADEMARK OFFICE

UNITED STATES DEPARTMENT OF COMMERCE
United States Patent and Trademark Office
Address: COMMISSIONER FOR PATENTS
P.O. Box 1450
Alexandria, Virginia 22313-1450
www.uspto.gov

APPLICATION NUMBER	FILING or 371(c) DATE	GRP ART UNIT	FIL FEE REC'D	ATTY.DOCKET.NO	TOT CLAIMS	IND CLAIMS
10/979,376	10/28/2004	1795	920	HON-107/PCT/US	15	3

CONFIRMATION NO. 3760

CORRECTED FILING RECEIPT

30869
LUMEN PATENT FIRM, INC.
2345 YALE STREET
SECOND FLOOR
PALO ALTO, CA 94306

OC000000032742585

Date Mailed: 10/23/2008

Receipt is acknowledged of this non-provisional patent application. The application will be taken up for examination in due course. Applicant will be notified as to the results of the examination. Any correspondence concerning the application must include the following identification information: the U.S. APPLICATION NUMBER, FILING DATE, NAME OF APPLICANT, and TITLE OF INVENTION. Fees transmitted by check or draft are subject to collection. Please verify the accuracy of the data presented on this receipt. **If an error is noted on this Filing Receipt, please submit a written request for a Filing Receipt Correction. Please provide a copy of this Filing Receipt with the changes noted thereon. If you received a "Notice to File Missing Parts" for this application, please submit any corrections to this Filing Receipt with your reply to the Notice. When the USPTO processes the reply to the Notice, the USPTO will generate another Filing Receipt incorporating the requested corrections**

Applicant(s)

Jun Sasahara, Wako-shi, JAPAN;
Toshifumi Suzuki, Wako-shi, JAPAN;
Tadahiro Kubota, Wako-shi, JAPAN;
Nariaki Kuriyama, Wako-shi, JAPAN;
Yuji Saito, Mountain View, CA;

Power of Attorney:

Thomas McFarlane--39299
Marek Alboszta--39894
Katharina Schuster--50000
Ron Jacobs--50142
Tianhua GU--52480
Robert Lodenkamper--55399

Domestic Priority data as claimed by applicant

This application is a CON of PCT/JP03/05631 05/02/2003
which claims benefit of 60/379,524 05/09/2002

Foreign Applications

If Required, Foreign Filing License Granted: 12/09/2004

The country code and number of your priority application, to be used for filing abroad under the Paris Convention, is **US 10/979,376**

Projected Publication Date: Not Applicable

Non-Publication Request: No

Early Publication Request: No

Title

Fuel cell assembly, separator-diffusion layer assembly for fuel cell assembly and manufacturing method therefor

Preliminary Class

429

PROTECTING YOUR INVENTION OUTSIDE THE UNITED STATES

Since the rights granted by a U.S. patent extend only throughout the territory of the United States and have no effect in a foreign country, an inventor who wishes patent protection in another country must apply for a patent in a specific country or in regional patent offices. Applicants may wish to consider the filing of an international application under the Patent Cooperation Treaty (PCT). An international (PCT) application generally has the same effect as a regular national patent application in each PCT-member country. The PCT process **simplifies** the filing of patent applications on the same invention in member countries, but **does not result** in a grant of "an international patent" and does not eliminate the need of applicants to file additional documents and fees in countries where patent protection is desired.

Almost every country has its own patent law, and a person desiring a patent in a particular country must make an application for patent in that country in accordance with its particular laws. Since the laws of many countries differ in various respects from the patent law of the United States, applicants are advised to seek guidance from specific foreign countries to ensure that patent rights are not lost prematurely.

Applicants also are advised that in the case of inventions made in the United States, the Director of the USPTO must issue a license before applicants can apply for a patent in a foreign country. The filing of a U.S. patent application serves as a request for a foreign filing license. The application's filing receipt contains further information and guidance as to the status of applicant's license for foreign filing.

Applicants may wish to consult the USPTO booklet, "General Information Concerning Patents" (specifically, the section entitled "Treaties and Foreign Patents") for more information on timeframes and deadlines for filing foreign patent applications. The guide is available either by contacting the USPTO Contact Center at 800-786-9199, or it can be viewed on the USPTO website at http://www.uspto.gov/web/offices/pac/doc/general/index.html.

For information on preventing theft of your intellectual property (patents, trademarks and copyrights), you may wish to consult the U.S. Government website, http://www.stopfakes.gov. Part of a Department of Commerce initiative, this website includes self-help "toolkits" giving innovators guidance on how to protect intellectual property in specific countries such as China, Korea and Mexico. For questions regarding patent enforcement issues, applicants may call the U.S. Government hotline at 1-866-999-HALT (1-866-999-4158).

LICENSE FOR FOREIGN FILING UNDER

Title 35, United States Code, Section 184

Title 37, Code of Federal Regulations, 5.11 & 5.15

GRANTED

The applicant has been granted a license under 35 U.S.C. 184, if the phrase "IF REQUIRED, FOREIGN FILING LICENSE GRANTED" followed by a date appears on this form. Such licenses are issued in all applications where

the conditions for issuance of a license have been met, regardless of whether or not a license may be required as set forth in 37 CFR 5.15. The scope and limitations of this license are set forth in 37 CFR 5.15(a) unless an earlier license has been issued under 37 CFR 5.15(b). The license is subject to revocation upon written notification. The date indicated is the effective date of the license, unless an earlier license of similar scope has been granted under 37 CFR 5.13 or 5.14.

This license is to be retained by the licensee and may be used at any time on or after the effective date thereof unless it is revoked. This license is automatically transferred to any related applications(s) filed under 37 CFR 1.53(d). This license is not retroactive.

The grant of a license does not in any way lessen the responsibility of a licensee for the security of the subject matter as imposed by any Government contract or the provisions of existing laws relating to espionage and the national security or the export of technical data. Licensees should apprise themselves of current regulations especially with respect to certain countries, of other agencies, particularly the Office of Defense Trade Controls, Department of State (with respect to Arms, Munitions and Implements of War (22 CFR 121-128)); the Bureau of Industry and Security, Department of Commerce (15 CFR parts 730-774); the Office of Foreign AssetsControl, Department of Treasury (31 CFR Parts 500+) and the Department of Energy.

NOT GRANTED

No license under 35 U.S.C. 184 has been granted at this time, if the phrase "IF REQUIRED, FOREIGN FILING LICENSE GRANTED" DOES NOT appear on this form. Applicant may still petition for a license under 37 CFR 5.12, if a license is desired before the expiration of 6 months from the filing date of the application. If 6 months has lapsed from the filing date of this application and the licensee has not received any indication of a secrecy order under 35 U.S.C. 181, the licensee may foreign file the application pursuant to 37 CFR 5.15(b).

UNITED STATES PATENT AND TRADEMARK OFFICE

COMMISSIONER FOR PATENTS
UNITED STATES PATENT AND TRADEMARK OFFICE
P.O. BOX 1450
ALEXANDRIA, VA 22313-1450
www.uspto.gov

AGILENT TECHNOLOGIES, INC.
INTELLECTUAL PROPERTY ADMINISTRATION, LEGAL DEPT.
P.O. BOX 7599
M/S DL429
LOVELAND, CO 80537-0599

COPY MAILED

APR 05 2006

OFFICE OF PETITIONS

In re Application of
Valery Kanesvky, et al.
Application No. 10/979,387
Filed: November 2, 2004
Attorney Docket No. 10040999-1

ON PETITION

This is a decision on the petition under 37 CFR 1.313(c)(2), filed March 24, 2006 to withdraw the above-identified application from issue after payment of the issue fee.

It does not appear that the petition is signed by an attorney of record. However, in accordance with 37 CFR 1.34(a), the signature of Jody C. Bishop appearing on the correspondence shall constitute a representation to the United States Patent and Trademark Office that he is authorized to represent the particular party on whose behalf he acts. However, if Mr. Bishop desires to receive correspondence regarding this file, the appropriate power of attorney documentation must be submitted. A courtesy copy of this decision is being mailed to Mr. Bishop, the petitioner herein. However, until otherwise instructed, all future correspondence regarding this application file will be directed solely to the above-noted correspondence address of record.

The petition is **GRANTED**.

The above-identified application is withdrawn from issue for consideration of a submission under 37 CFR 1.114 (request for continued examination). See 37 CFR 1.313(c)(2).

Petitioner is advised that the issue fee paid on March 9, 2006, in the above-identified application cannot be refunded. If, however, the above-identified application is again allowed, petitioner may request that it be applied towards the issue fee required by the new Notice of Allowance. [1]

Telephone inquiries relating to this decision should be directed to the undersigned at (571) 272-3204.

[1]The request to apply the issue fee to the new Notice may be satisfied by completing and returning the new Issue Fee Transmittal Form PTOL-85(b), which includes the following language thereon: "Commissioner for Patents is requested to apply the Issue Fee and Publication Fee (if any) or re-apply any previously paid issue fee to the application identified above." Petitioner is advised that, whether a fee is indicated as being due or not, the Issue Fee Transmittal Form **must** be completed and timely submitted to avoid abandonment. Note the language in bold text on the first page of the Notice of Allowance and Fee(s) Due (PTOL-85).

The application is being referred to Technology Center AU 2857 for further processing of the request for continued examination under 37 CFR 1.114 filed March 24, 2006.

Sherry D Brinkley
Petitions Examiner
Office of Petitions

cc: JODY BISHOP
FULBRIGHT AND JAWORSKI, LLP
2200 ROSS AVENUE, SUITE 2800
DALLAS, TX 75201

UNITED STATES PATENT AND TRADEMARK OFFICE

OFFICE

AGILENT TECHNOLOGIES INC.
INTELLECTUAL PROPERTY ADMINISTRATION,LEGAL DEPT.
MS BLDG. E P.O. BOX 7599
LOVELAND CO 80537

COPY MAILED

SEP 04 2007

Director's Office
Office of Patent Publication

In re Application of	:	
KANESKY, VALERY	:	
Application No. 10/979,387	:	**DECISION ON PETITION**
Filed: November 02, 2006	:	
Attorney Docket No. **10040999-1**	:	

This is a decision on the Petition Under 37 C.F.R 1.181, received in the United States Patent & Trademark Office (USPTO) on September 04-, 2007 which is being treated as a Petition to Withdraw Holding of Abandonment under 37 C.F.R. 1.18.

The petition is **DISMISSED**. Any request for reconsideration of this decision, or as explained below, filing a petition seeking revival under 37 CFR § 1.137, must be filed within TWO (2) MONTHS from the mail date of this decision.

The Petition Under 37 C.F.R. §1.181(a) To Withdraw Holding Of Abandonment, received in the USPTO on September 21, 2006 can not be withdrawn because of non-response of the New Notice of Allowance mailed April 19, 2006 in lieu of the RCE mailed in on March 24, 2006. A letter requesting that the issue fee payment on May 30,2006 should have been sent to apply to the new Issue Fee due July 19,2006.

Applicant may seek relief by filing a petition for Revival of Abandoned Application under CFR § 1.137 (a) or (b). (Forms are available at USPTO website http://www.uspto.gov)

- Under 37 CFR 1.137(a), a petition for the revival of an ***unavoidable*** abandoned application
- Under 37 CFR 1.137(b), a petition for the revival of an ***unintentionally*** abandoned application

Further inquires with respect to filing a petition under 37 CFR § 1.137 may be directed to the Office of Petitions at 571-272-3282 or addressed as follows:

By mail: Mail Stop Petitions
Commissioner for Patents
Office of Petitions
P O Box 1450
Alexandria, VA 22313-1450

Telephone inquires concerning this decision matter may be directed to the undersigned at 703 308-9250 Ext. 153.

Cheryl Mcleod
Quality Operations Assistant
Office of the Director
Office of Patent Publications

UNITED STATES PATENT AND TRADEMARK OFFICE

COMMISSIONER FOR PATENTS
UNITED STATES PATENT AND TRADEMARK OFFICE
P.O. BOX 1450
ALEXANDRIA, VA 22313-1450
www.uspto.gov

AGILENT TECHNOLOGIES INC.
INTELLECTUAL PROPERTY ADMINISTRATION,LEGAL DEPT.
MS BLDG. E P.O. BOX 7599
LOVELAND, CO 80537

COPY MAILED
FEB 21 2008
OFFICE OF PETITIONS

In re Application of Valery Kanevsky, et al. Application No. 10/979,387 Filed: November 2, 2004 Attorney Docket No. 10040999-1	: : : : :	ON PETITION

This is a decision on the petition under 37 CFR 1.137(b) to revive the above-identified application, filed October 31, 2007.

The application became abandoned for failure to pay the issue fee on or before July 19, 2006. A Notice of Abandonment was mailed on August 23, 2006. On October 31, 2007, the present petition was filed.

The petition satisfies the requirements of 37 CFR 1.137(b). Accordingly, the petition is **GRANTED**.

The application is being referred to the Office of Data Management to be processed into a patent.

Telephone inquires related to this decision should be directed to the undersigned at (571) 272-3204. Telephone inquiries related to processing as a patent should be directed to (571) 272-4200.

Sherry D. Brinkley
Petitions Examiner
Office of Petitions

UNITED STATES PATENT AND TRADEMARK OFFICE

Commissioner for Patents
United States Patent and Trademark Office
P.O. Box 1450
Alexandria, VA 22313-1450
www.uspto.gov

HONEYWELL INTERNATIONAL INC.
PATENT SERVICES
101 COLUMBIA ROAD
P O BOX 2245
MORRISTOWN NJ 07962-2245

COPY MAILED

AUG 03 2009

OFFICE OF PETITIONS

In re Application of
Aaron M. Bauman et al.
Application No. 10/979,417
Filed: November 2, 2004
Attorney Docket No. H0007747-1626

: DECISION ON APPLICATION
:FOR PATENT TERM ADJUSTMENT

This is a decision on the "REQUEST UNDER 37 C.F.R. § 1.705(b) TO RECONSIDER THE PATENT TERM ADJUSTMENT" filed November 25, 2008. Applicant requests that the initial determination of patent term adjustment under 35 U.S.C. 154(b) be corrected from seven hundred twenty-four (724)days to eight hundred two (802)days.

The application for patent term adjustment is **DISMISSED**.

On September 2, 2008, the Office mailed the Determination of Patent Term Adjustment under 35 U.S.C. 154(b) in the above-identified application. The Notice stated that the patent term adjustment (PTA) to date is 724 days. The instant application for patent term adjustment was timely filed[1]. Applicants dispute the reduction of 78 days of PTA pursuant to 1.704(c)(8) for the filing of a supplemental response on August 20, 2008.

On June 3, 2008 applicants filed a response to the non-final Office action mailed March 14, 2008. Then on August 20, 2008, applicants filed a Supplemental Response. Pursuant to 37 CFR § 1.704(c)(8), the submission of a supplemental reply or other paper, other than a supplemental reply or other paper expressly requested by the examiner, after a reply has been filed, is a failure to engage in reasonable efforts to conclude prosecution.

Applicant's arguments have been considered, but not found to be persuasive. Pursuant to 37 CFR § 1.704(c), circumstances that constitute a failure of the applicant to engage in reasonable efforts to conclude processing or examination of an application also include the following circumstances, which will result in the following reduction of the period of adjustment set forth in § 1.703 to the extent that the periods are not overlapping:

---

[1] PALM records indicate that the Issue Fee was also received on November 25, 2008.

(7) Submission of a reply having an omission (§1.135(c)), in which case the period of adjustment set forth in § 1.703 shall be reduced by the number of days, if any, beginning on the day after the date the reply having an omission was filed and ending on the date that the reply or other paper correcting the omission was filed;

(8) Submission of a supplemental reply or other paper, other than a supplemental reply or other paper expressly requested by the examiner, after a reply has been filed, is a failure to engage in reasonable efforts to conclude prosecution.

Applicant argues that the Examiner requested that the Applicant submit a Supplemental Response to indicate the changed claim language for all claims. The record does not support a conclusion that the supplemental response was requested by the examiner. Accordingly, the filing of the supplemental response on August 20, 2008 may be considered a failure to engage and a proper basis for reduction.

In view thereof, it is concluded that the determination of patent term adjustment at the time of the mailing of the Notice of Allowance is 724 days.

The record supports a conclusion that this application is not subject to a terminal disclaimer"

Receipt of the $200.00 fee set forth in 37 CFR 1.18(e) is acknowledged. No additional fees are required.

The application is being forwarded to the Office of Data Management for issuance of the patent. The patent term adjustment indicated on the patent (as shown on the Issue Notification mailed about three weeks prior to patent issuance) will include any additional adjustment accrued both for Office delay in issuing the patent more than four months after payment of the issue fee and satisfaction of all outstanding requirements, and for the Office taking in excess of three years to issue the patent (to the extent that the three-year period does not overlap with periods already accorded).

Telephone inquiries specific to this decision should be directed to Senior Petitions Attorney Patricia Faison-Ball at (571) 272-3212.

Kery A. Fries
Senior Legal Advisor
Office of Patent Legal Administration
Office of Deputy Commissioner
for Examination Policy

UNITED STATES PATENT AND TRADEMARK OFFICE

UNITED STATES DEPARTMENT OF COMMERCE
United States Patent and Trademark Office
Address: COMMISSIONER FOR PATENTS
P.O. Box 1450
Alexandria, Virginia 22313-1450
www.uspto.gov

HONEYWELL INTERNATIONAL INC.
PATENT SERVICES
101 COLUMBIA ROAD
P O BOX 2245
MORRISTOWN, NJ 07962-2245

Mail Date: 04/21/2010

Applicant	: Aaron M. Bauman	: DECISION ON REQUEST FOR
Patent Number	: 7584032	: RECALCULATION of PATENT
Issue Date	: 09/01/2009	: TERM ADJUSTMENT IN VIEW
Appliction No	: 10/979,417	: OF WYETH AND NOTICE OF INTENT TO
Filed	: 11/02/2004	: ISSUE CERTIFICATE OF CORRECTION
		:

The Request for Recalculation is **GRANTED** to the extent indicated.

The patent term adjustment has been determined to be **1260** days. The USPTO will *sua sponte* issue a certificate of correction reflecting the amount of PTA days determined by the recalculation.

Prior to the issuance of the certificate of correction, the USPTO will afford patentee an opportunity to be heard and request reconsideration. Accordingly, patentee has **one month or thirty (30) days**, whichever is longer, to file a request for reconsideration of this patent term adjustment calculation. See 35 U.S.C. 154(b)(3)(B)(ii) and 37 CFR 1.322(a)(4). No extensions of time will be granted under 37 CFR 1.136.

Patentee should use document code PET.OP if electronically filing a request for reconsideration of this patent term adjustment calculation. The patentee must also include the information required by 37 CFR 1.705(b)(2) and the fee required by 37 CFR 1.18(e). If patentee does not file a timely request for reconsideration of this patent term adjustment calculation including the information required by 37 CFR 1.705(b)(2) and the fee required by 37 CFR 1.18(e), the USPTO will issue a certificate of correction reflecting the PTA determination noted above.

Patentee should be aware that in order to preserve the right to review in the United States District Court for the District of Columbia of the USPTO patent term adjustment determination, patentee must ensure that he or she also take the steps required under 35 U.S.C. 154(b)(4)(A) in a timely manner. Nothing in the request for recalculation should be construed as providing an alternative time frame for commencing a civil action under 35 U.S.C. 154(b)(4)(A).

Any questions concerning this decision should be directed to the Office of Patent Legal Administration at 571-272-7702.

UNITED STATES PATENT AND TRADEMARK OFFICE

Commissioner for Patents
United States Patent and Trademark Office
P.O. Box 1450
Alexandria, VA 22313-1450
www.uspto.gov

KNOBBE MARTENS OLSON & BEAR LLP
2040 MAIN STREET
FOURTEENTH FLOOR
IRVINE CA 92614

COPY MAILED

AUG 14 2007

OFFICE OF PETITIONS

In re Application of	:	
Camm, et al.	:	
Application No. 10/979,447	:	DECISION ON PETITION
Filed: November 2, 2004	:	
Attorney Docket No. FETHE24.ICP1C1	:	

This is a decision on the "PETITION UNDER 37 C.F.R 1.182, 1.183 OR 1.78(a)(3)", filed January 31, 2006, to accept an unintentionally delayed claim for the benefit of priority to prior-filed PCT Application No. PCT/CA01/00776 and US application No. 09/729,747, which is also being treated as a petition under 37 CFR 1.55(c).

The petition under 37 CFR 1.55(c) is **DISMISSED AS MOOT**.

The petition under 37 CFR 1.78(a)(3) is **DISMISSED**.

The petition under 37 CFR 1.183 is **DISMISSED**.

Background

The first sentence of the specification stated that the application is a continuation of application No. 10/005,186, which is a continuation in part of application No. 09/729,747. The next sentence stated that this application claims foreign priority based on PCT Application No. PCT/CA01/00776.

On September 19, 2005, Applicants deleted the beginning of the specification to the extent that the application claimed priority based on application No. 09/729,747. In addition, the amendment deleted the sentence stating that the application claims priority to the PCT application. As indicated in the remarks section of the amendment, and in the instant petition, petitioner intentionally chose to delete the claims for priority and the deletion of the claims was not an inadvertent mistake.

Applicants have filed a petition under 37 CFR 1.182, or in the alternative under 37 CFR 1.183 or 37 CFR 1.78, to have the deleted priority claims added back to the specification.

The Foreign Priority Claim

A proper foreign priority claim was filed with the application. The declaration included the foreign priority claim to the PCT application as required by 37 CFR 1.63(c)(2) when the claim is not on an ADS.

Although applicants attempted to delete the foreign priority claim on September 19, 2005, the claim was not deleted. The specification does not need to refer to the foreign priority document. Petitioner is directed to MPEP 601, which states:

> A supplemental ADS that is being used to correct data shown in an oath or declaration, such as foreign priority or residence information for an inventor, would show the original incorrect information with strike-through or brackets, and the new information with underlining, as if an ADS had originally been used to submit the information. For example, if the original oath or declaration included a foreign priority claim, in order to delete the foreign priority claim, applicant should provide a supplemental ADS showing the foreign priority claim with strike-through or brackets to ensure that the patent will reflect such change.

In view of the above, to the extent that the petition requests addition of the foreign priority claim, the petition is **DISMISSED AS MOOT**.

The Domestic Priority Claim

A petition for acceptance of a claim for late priority under 37 CFR 1.78(a)(3) is only applicable to those applications filed on or after November 29, 2000. Further, the petition is appropriate only after the expiration of the period specified in 37 CFR 1.78(a)(2)(ii). In addition, the petition under 37 CFR

1.78(a)(3) must be accompanied by:

> (1) the reference required by 35 U.S.C. § 120 and 37 CFR 1.78(a)(2)(i) of the prior-filed application, unless previously submitted;
>
> (2) the surcharge set forth in § 1.17(t); and
>
> (3) a statement that the entire delay between the date the claim was due under 37 CFR 1.78(a)(2)(ii) and the date the claim was filed was unintentional. The Commissioner may require additional information where there is a question whether the delay was unintentional.

Petitioner has not met requirement (3) above. The entire delay in the submission of the claim was not unintentional. Applicants intentionally deleted the portion of the claim they seek to reintroduce.

Petitioner is directed to MPEP 201.11(III)(G), which states:

> A cancellation of a benefit claim to a prior application may be considered as a showing that the applicant is intentionally waiving the benefit claim to the prior application in the instant application. If the applicant later files a petition to accept an unintentionally delayed claim to add the benefit claim to the prior application in the same application from which the benefit claim was cancelled, the Office may refuse to accept such benefit claim because the delay was not unintentional.

In view of the above, the petition under 37 CFR 1.78(a)(3) is **DISMISSED**.

Petition Under 37 CFR 1.183

35 U.S.C. 120 states in part:

> No application shall be entitled to the benefit of an earlier filed application under this section unless an amendment containing the specific reference to the earlier filed application is submitted at such time during the pendency of the application as required by the Director. The Director may consider the failure to submit such an amendment within that time period as a waiver of any benefit under this section. The Director may establish procedures, including the payment of a surcharge, to accept an

> **unintentionally** delayed submission of an amendment under this section (emphasis added).

The statute only provides for the acceptance of an unintentionally delayed claim to the benefit of an earlier filed application. As set forth in 37 CFR 1.183, the Office can not waive the requirements of a statue.

Accordingly, the petition under 37 CFR 1.183 must be **DISMISSED**.

The $400 fee for the petition under 37 CFR 1.183 has been charged to Deposit Account No. 11-1410, as authorized.

Any inquiries concerning this decision may be directed to Petitions Attorney Cliff Congo at 571-272-3207. All other inquiries concerning either the examination procedures or status of the application should be directed to the Technology Center.

The matter is being forwarded to Group Art Unit 3742 for consideration of the RCE filed January 31, 2006.

Charles Steven Brantley
Senior Petitions Attorney
Office of Petitions

UNITED STATES PATENT AND TRADEMARK OFFICE

Commissioner for Patents
United States Patent and Trademark Office
P.O. Box 1450
Alexandria, VA 22313-1450
www.uspto.gov

Date : May 3, 2006

TO : Director, Office of Patent Publication

FROM : Office of the Deputy Commissioner for Patent Examination Policy

SUBJECT : Withdrawal from Issue of

Applicant(s) : Gerardo Hidalgo, et al.
Application No. : 10/979,479
Filed : November 1, 2004

The above-identified application has been assigned Patent No. 7,045,587 and an issue date of May 16, 2006.

It is hereby directed that this application be withdrawn from issue at the request of the applicant.

Do not refund the issue fee.

The following erratum should be published in the Official Gazette if the above-identified application is published in the OG of May 16, 2006:

> "All reference to Patent No. 7,045,587 to GERARDO HIDALGO, ET AL. of SPAIN for METHOD FOR MAKING POLYCARBONATE appearing in the Official Gazette of May 16, 2006, should be deleted since no patent was granted."

Sherry D. Brinkley
Petitions Examiner
Office of Petitions

cc: Paul Harrison, Crystal Park 3-44l (FAX-306-2737)
Deneise Boyd, Crystal Park 2, Suite 1100 (FAX-308-5413)
Mary Louise McAskill, Crystal Park 3-910 (FAX 305-4372)
Niomi Farmer, Crystal Park 3-9l0 (FAX-305-4372)
Mary E. Johnson (Cookie), P/OCS, CM1-6D07
Duane K.Davis, P/OCS, CM1-6A07
Tamara K. Greene, PK3-910

UNITED STATES PATENT AND TRADEMARK OFFICE

COMMISSIONER FOR PATENTS
UNITED STATES PATENT AND TRADEMARK OFFICE
P.O. BOX 1450
ALEXANDRIA, VA 22313-1450
www.uspto.gov

FRANK A. SMITH
GENERAL ELECTRIC CO.
ONE PLASTICS AVE.
PITTSFIELD, MA 01201

COPY MAILED
MAY 03 2006
OFFICE OF PETITIONS

In re Application of :
Gerardo Hidalgo, et al. :
Application No. 10/979,479 : ON PETITION
Filed: November 1, 2004 :
Atty Docket No.: 126669-1 :
:

This is a decision on the petition, filed May 3, 2006, under 37 CFR 1.313(c)(2) to withdraw the above-identified application from issue after payment of the issue fee.

The petition is **GRANTED**.

The above-identified application is withdrawn from issue for consideration of a submission under 37 CFR 1.114 (request for continued examination). See 37 CFR 1.313(c)(2).

Petitioner is advised that the issue fee paid on February 28, 2006, in the above-identified application, cannot be refunded. If, however, the above-identified application is again allowed, petitioner may request that it be applied towards the issue fee required by the new Notice of Allowance.[1]

It is noted that the address given on the petition differs from the address of record. If appropriate, a change of address should be filed in this case in accordance with MPEP 601.03. A courtesy copy of this decision is being mailed to the address noted on the petition. However, until otherwise instructed, all future correspondence regarding this application will be mailed solely to the address of record.

Telephone inquiries relating to this decision should be directed to the undersigned at (571) 272-3204.

[1]The request to apply the issue fee to the new Notice may be satisfied by completing and returning the new Issue Fee Transmittal Form PTOL-85(b), which includes the following language thereon: "Commissioner for Patents is requested to apply the Issue Fee and Publication Fee (if any) or re-apply any previously paid issue fee to the application identified above." Petitioner is advised that, whether a fee is indicated as being due or not, the Issue Fee Transmittal Form **must** be completed and timely submitted to avoid abandonment. Note the language in bold text on the first page of the Notice of Allowance and Fee(s) Due (PTOL-85).

The application is being referred to Technology Center AU 1711 for further processing of the request for continued examination under 37 CFR 1.114.

Sherry D. Brinkley

Sherry D. Brinkley
Petitions Examiner
Office of Petitions

cc: CANTOR COLBURN LLP - GE PLASTICS - SMITH
55 GRIFFIN RD SOUTH
BLOOMFIELD, CT 06002

UNITED STATES PATENT AND TRADEMARK OFFICE

Commissioner for Patents
United States Patent and Trademark Office
P.O. Box 1450
Alexandria, VA 22313-1450
www.uspto.gov

MAILED FROM DIRECTORS OFFICE
JAN 30 2007
TECHNOLOGY CENTER 2800

LSI Logic Corporation
1621 Barber Lane
MS: D-106
Milpitas, CA 95035

In re Application of:
Mukul A. Joshi et al.
Serial No.: 10/979,491
Filed: November 2, 2004
Attorney Docket No.: 02-0149/1D

DECISION ON PETITION TO WITHDRAW THE HOLDING OF ABANDONMENT

This is a decision on the "PETITION TO WITHDRAW ERRONEOUS ABANDONMENT AND REINSTATE APPLICATION" filed on May 31, 2006. It is being treated as a petition to withdraw the holding of abandonment under 37 C.F.R. § 1.181(a).

The petition is **GRANTED**.

A Notice of Abandonment was mailed on May 22, 2006 holding the application to be abandoned for failure to timely file a response to the Office action mailed on September 19, 2005. However, it is apparent that there was no abandonment in fact. A review of the application file reveals that a timely response (a Terminal Disclaimer) to the Office action of September 19, 2005 was filed on December 19, 2005. The Terminal Disclaimer was a complete response to the Office action of September 19, 2005 since an obviousness-type double patenting rejection was the only rejection given in the Office action.

Accordingly, the Notice of Abandonment mailed May 22, 2006 is hereby **VACATED** and the holding of abandonment is withdrawn. Any inconvenience due to the inadvertent abandonment of the application is greatly regretted.

The Terminal Disclaimer filed December 19, 2005 was approved on October 16, 2006 and thus overcomes the obviousness-type double rejection given in the Office action. The examiner will prepare a new Office action in light of the approval of the Terminal Disclaimer.

Any inquiries regarding this decision should be directed to Edward Westin at (571) 272-1638.

Robert Oberleitner, Director
Technology Center 2800
Semiconductors, Electrical and Optical
Systems and Components

UNITED STATES PATENT AND TRADEMARK OFFICE

Commissioner for Patents
United States Patent and Trademark Office
P.O. Box 1450
Alexandria, VA 22313-1450
www.uspto.gov

Morrison & Foerster LLP
755 Page Mill Road
Palo Alto, CA 94304-1018

COPY MAILED

FEB 1 3 2007

OFFICE OF PETITIONS

In re Application of

Huafeng Wen
Application No. 10/979,497
Filed: November 2, 2004
Attorney Docket No. 584682000200

DECISION ON PETITION
TO WITHDRAW
FROM RECORD

This is a decision on the Request to Withdraw as attorney or agent of record under 37 C.F.R. § 1.36(b), filed October 12, 2006.

The request is **APPROVED**.

A grantable request to withdraw as attorney/agent of record must be signed by every attorney/agent seeking to withdraw or contain a clear indication that one attorney is signing on behalf of another/others. A request to withdraw will not be approved unless at least 30 (thirty) days would remain between the date of approval and the later of the expiration date of a time to file a response or the expiration date of the maximum time period which can be extended under 37 C.F.R. § 1.136(a).

The request was signed by Charles D. Holland on behalf of all attorneys of record.

All attorneys/agents associated have been withdrawn.

Applicant is reminded that there is no attorney of record at this time.

The request to change the correspondence of record is not acceptable as the requested correspondence address is not that of: (1) the first named signing inventor; or (2) an intervening assignee of the entire interest under 37 C.F.R 3.71. All future communications from the Office will be directed to the first named signing inventor at the first copied address below until otherwise properly notified by the applicant.

There is no outstanding Office action at this time.

Telephone inquiries concerning this decision should be directed to Terri Williams at 571-272-2991.

T. Williams

Terri Williams
Petitions Examiner
Office of Petitions

cc: **Huafeng Wen**
2117 Gossamer Avenue
Redwood City, CA 94065

cc: **Tom Counts**
Paul Hastings
55 Second Street, 24th Floor
San Francisco, CA 94105

UNITED STATES PATENT AND TRADEMARK OFFICE

UNITED STATES DEPARTMENT OF COMMERCE
United States Patent and Trademark Office
Address: COMMISSIONER FOR PATENTS
P.O. Box 1450
Alexandria, Virginia 22313-1450
www.uspto.gov

APPLICATION NUMBER	FILING OR 371 (c) DATE	FIRST NAMED APPLICANT	ATTY. DOCKET NO./TITLE
10/979,497	11/02/2004	Huafeng Wen	584682000200

CONFIRMATION NO. 2949

OC000000022482286

OC000000022482286

25226
MORRISON & FOERSTER LLP
755 PAGE MILL RD
PALO ALTO, CA 94304-1018

Date Mailed: 02/13/2007

NOTICE REGARDING CHANGE OF POWER OF ATTORNEY

This is in response to the Power of Attorney filed 10/12/2006.

- The withdrawal as attorney in this application has been accepted. Future correspondence will be mailed to the new address of record. 37 CFR 1.33.

Terri S. Williams

TERRI S WILLIAMS
OP (571) 272-2991

FORMER ATTORNEY/AGENT COPY

UNITED STATES PATENT AND TRADEMARK OFFICE

Commissioner for Patents
United States Patent and Trademark Office
P.O. Box 1450
Alexandria, VA 22313-1450
www.uspto.gov

MORRISON & FOERSTER LLP
755 PAGE MILL ROAD
PALO ALTO, CA 94304-1018

COPY MAILED

AUG 27 2007

OFFICE OF PETITIONS

In re Application of :

WEN, Huafeng :
Application No. 10/979,504 : DECISION ON PETITION
Filed: November 2, 2004 : TO WITHDRAW
Attorney Docket No. 71784-02201 : FROM RECORD

This is a decision on the Request to Withdraw as attorney or agent of record under 37 C.F.R. § 1.36(b), filed October 12, 2006.

The request is **NOT APPROVED** as moot.

A review of the file record indicates that the power of attorney to **MORRISON & FOERSTER LLP** has been revoked by the assignee of the patent application on April 3, 2007. Accordingly, the request to withdraw under 37 C.F.R. § 1.36(b) is moot.

All future communications from the Office will continue to be directed to the below-listed address until otherwise notified by applicant.

Telephone inquires concerning this decision should be directed to the undersigned at 571-272-7253.

Monica A. Graves
Petitions Examiner
Office of Petitions

cc: **PAUL HASINGS JANOFSKY & WALKER LLP**
P.O. BOX 919092
SAN DIEGO, CA 92191-9092

UNITED STATES PATENT AND TRADEMARK OFFICE

Commissioner for Patents
United States Patent and Trademark Office
P.O. Box 1450
Alexandria, VA 22313-1450
www.uspto.gov

COPY MAILED
JAN 12 2009

HUFFMAN LAW GROUP, P.C.
1900 MESA AVE.
COLORADO SPRINGS CO. 80906

In re Application of	:	
Ian Robert Davies et al	:	
Application No. 10/979,510	:	DECISION GRANTING PETITION
Filed: November 2, 2004	:	UNDER 37 CFR 1.313(c)(2)
Attorney Docket No. CHAP.0112	:	

This is a decision on the petition under 37 CFR 1.313(c)(2), filed January 12, 2009, to withdraw the above-identified application from issue after payment of the issue fee.

The petition is **GRANTED**.

The above-identified application is withdrawn from issue for consideration of a submission under 37 CFR 1.114 (request for continued examination). *See* 37 CFR 1.313(c)(2).

Petitioner is advised that the issue fee paid on December 19, 2008 cannot be refunded. If, however, this application is again allowed, petitioner may request that it be applied towards the issue fee required by the new Notice of Allowance.[1]

Telephone inquiries should be directed to the undersigned at (571) 272-3208.

This application is being referred to Technology Center AU 2114 for processing of the request for continued examination under 37 CFR 1.114 and for consideration of the concurrently filed IDS.

/Karen Creasy/
Karen Creasy
Petitions Examiner
Office of Petitions

---

[1] *The request to apply the issue fee to the new Notice may be satisfied by completing and returning the new Part B – Fee(s) Transmittal Form (along with any balance due at the time of submission). Petitioner is advised that the Issue Fee Transmittal Form* ***must*** *be completed and timely submitted to avoid abandonment of the application.*

UNITED STATES PATENT AND TRADEMARK OFFICE

Commissioner for Patents
United States Patent and Trademark Office
P.O. Box 1450
Alexandria, VA 22313-1450
www.uspto.gov

HUFFMAN LAW GROUP, P.C.
1900 MESA AVE.
COLORADO SPRINGS CO 80906

MAILED

APR 13 2009

OFFICE OF PETITIONS

In re Application of	:	
Ian Robert Davies et al	:	
Application No. 10/979,510	:	DECISION GRANTING PETITION
Filed: November 2, 2004	:	UNDER 37 CFR 1.313(c)(2)
Attorney Docket No. CHAP.0112	:	

This is a decision on the petition under 37 CFR 1.313(c)(2), filed April 10, 2009, to withdraw the above-identified application from issue after payment of the issue fee.

The petition is **GRANTED**.

The above-identified application is withdrawn from issue for consideration of a submission under 37 CFR 1.114 (request for continued examination). *See* 37 CFR 1.313(c)(2).

Petitioner is advised that the issue fee paid on March 17, 2009 cannot be refunded. If, however, this application is again allowed, petitioner may request that it be applied towards the issue fee required by the new Notice of Allowance.[1]

Telephone inquiries should be directed to the undersigned at (571) 272-3208.

This application is being referred to Technology Center AU 2114 for processing of the request for continued examination under 37 CFR 1.114 and for consideration of the concurrently filed IDS.

/Karen Creasy/
Karen Creasy
Petitions Examiner
Office of Petitions

---

[1] *The request to apply the issue fee to the new Notice may be satisfied by completing and returning the new Part B – Fee(s) Transmittal Form (along with any balance due at the time of submission). Petitioner is advised that the Issue Fee Transmittal Form* ***must*** *be completed and timely submitted to avoid abandonment of the application.*

UNITED STATES PATENT AND TRADEMARK OFFICE

Commissioner for Patents
United States Patent and Trademark Office
P.O. Box 1450
Alexandria, VA 22313-1450
www.uspto.gov

FULBRIGHT & JAWORSKI LLP
666 FIFTH AVE
NEW YORK NY 10103-3198

COPY MAILED

SEP 12 2005

OFFICE OF PETITIONS

In re	:	
Jain, et al.	:	DECISION ON
Application No. 10/979,527	:	PETITION
Filing Date: November 1, 2004	:	
Attorney Docket No. NY-ROGO 210-US3-	:	
REISSUE	:	

This is a decision on the PETITION TO ASSIGN A FILING DATE which was filed March 14, 2005, and which requested that the application papers which were deposited on November 1, 2004, be accepted and accorded a filing date of November 1, 2004.

The petition is before the Office of Patent Legal Administration for decision.

REVIEW OF FACTS

1. On November 1, 2004, the application was deposited as a divisional of Application No. 10/336,442. Application No. 10/336,442 is a reissue divisional of Application No. 09/345,196, which has reissued as Reissue Patent No. RE38027.

2. On March 7, 2005, the Office of Initial Patent Examination (OIPE) mailed a Notice of Incomplete Application notifying the applicant that the application papers had not been accorded a filing date, because they were deposited without a specification.

3. On March 14, 2005, the present petition (with fee) was filed. Therein, applicants assert that, as the instant application is a divisional application of a reissue application, the instant application itself is a reissue application. Accordingly, MPEP 1410 requires a specification, which is a copy of the printed patent for which reissue is requested. Applicants assert they supplied this. In support thereof, applicants submit a copy of a USPTO date stamped postcard receipt.

DECISION ON PETITION TO ACCORD FILING DATE
AND ACCEPT PAPERS AS COMPLETE APPLICATION

A filing date of November 1, 2004, is requested based on the deposit of a specification and drawings on that date. A postcard receipt which itemizes and properly identifies the items which are being filed serves as *prima facie* evidence of receipt in the Office of all items listed thereon on the date stamped thereon by the Office. See MPEP 503. Petitioners' evidence has been considered and found persuasive that the papers deposited on November 1, 2004, included a specification and drawings. [1]

In view of the above, this application is accepted as a complete application and accorded a filing date of November 1, 2004.

In order to avoid further processing delays, the Office has made a copy of the patent for which reissue is requested, to serve as the specification and drawings for the instant reissue application.

The petition fee of $400 has been refunded to Deposit Account No. 50-0624.

CONCLUSION

1. The petition is **granted**.

2. The application is being returned to the Office of Initial Patent Examination for further processing as a reissue application with a filing date of November 1, 2004, using the copy of Reissued Patent No. RE38,027 prepared by the Office (see above).

---

[1] It is to be noted that, as this is an application for reissue, the content of the specification, claims and drawings were not in question on the date of deposit.

3. Telephone inquiries related to this decision should be directed to Petitions Attorney Cliff Congo at 571-272-3207.

4. Inquiries regarding petition status or general petition information are handled by the Office of Petitions staff at (571) 272-3282.

Kenneth M. Schor
Senior Legal Advisor
Office of Patent Legal Administration

September 2, 2005

C:\kiva\kenpet6\10979527FD.wpd

UNITED STATES PATENT AND TRADEMARK OFFICE

COMMISSIONER FOR PATENTS
UNITED STATES PATENT AND TRADEMARK OFFICE
P.O. BOX 1450
ALEXANDRIA, VA 22313-1450
www.uspto.gov

MICROSOFT CORPORATION C/O WESTMAN
CHAMPLIN & KELLY, P.A.
SUITE 1400 - INTERNATIONAL CENTRE
900 SECOND AVENUE SOUTH
MINNEAPOLIS MN 55402-3319

COPY MAILED

OCT 2 5 2005

OFFICE OF PETITIONS

Applicant: Corston-Oliver
Appl. No.: 10/979,531
Filing Date: November 2, 2004
Title: SYSTEM FOR IMPROVING THE PERFORMANCE OF INFORMATION RETRIEVAL-TYPE TASKS BY IDENTIFYING THE RELATIONS OF CONSTITUENTS
Attorney Docket No.: M61.12-0778
Pub. No.: US 2005/0114294 A1
Pub. Date: May 26, 2005

This is a decision on the request for a "Corrected Notice of Publication of Application, filed on September 12, 2005, for the above-identified application

The request is DISMISSED.

Applicant requests that the Notice of Publication of Application be corrected because the word "Performance" is misspelled as ""Performacne".

The Notice of Publication cannot be reprinted with the different address as requested, as there is not a method to regenerate the Notice. The notice was correctly printed with the correspondence address of record. If applicant wants to change the correspondence, he should make a request in writing.

Inquiries relating to this matter may be directed to Mark Polutta at (571) 272-7709 (voice).

Mark Polutta
Legal Advisor
Office of Patent Legal Administration
Office of the Deputy Commissioner
for Patent Examination Policy

UNITED STATES PATENT AND TRADEMARK OFFICE

Commissioner for Patents
United States Patent and Trademark Office
P.O. Box 1450
Alexandria, VA 22313-1450
www.uspto.gov

WESTMAN CHAMPLIN (MICROSOFT CORPORATION)
SUITE 1400
900 SECOND AVENUE SOUTH
MINNEAPOLIS MN 55402

MAILED

FEB 17 2009

OFFICE OF PETITIONS

In re Application of	:	
Corston-Oliver, et al.	:	
Application No. 10/979,531	:	ON PETITION
Filed: November 2, 2004	:	
Attorney Docket No. M61.12-0778	:	

This is a decision on the petition to revive under 37 CFR 1.137(a), filed January 23, 2009.

The petition under 37 CFR 1.137(a) is **DISMISSED**.

Any request for reconsideration of this decision must be submitted within **TWO (2) MONTHS** from the mail date of this decision. The reconsideration request should include a cover letter entitled "Renewed Petition under 37 CFR 1.137(a)". Extensions of time under 37 CFR 1.136(a) are permitted. No fee is required for a renewed petition.

The above-identified application became abandoned for failure to timely pay the issue fee in response to the Notice of Allowance mailed September 15, 2008. This Notice set an extendable period for reply of three (3) months. No issue fee having been received, the application became abandoned on December 16, 2008. A Notice of Abandonment was mailed on January 9, 2009.

A grantable petition under 37 CFR 1.137(a) must be accompanied by: (1) the reply required to the outstanding Office action or notice, unless previously filed; (2) the petition fee set forth in 37 CFR 1.17(l); (3) a showing to the satisfaction of the Commissioner that the **entire delay** in filing the required reply from the due date for the reply until the filing of a grantable petition pursuant to this paragraph was unavoidable; and (4) Any terminal disclaimer (and fee as set forth in § 1.20(d))

required pursuant to paragraph (d) of this section. The instant petition lacks item (3).

Decisions on reviving abandoned applications on the basis of "unavoidable" delay have adopted the reasonably prudent person standard in determining if the delay was unavoidable: "The word 'unavoidable' ... is applicable to ordinary human affairs, and requires no more or greater care or diligence than is generally used and observed by prudent and careful men in relation to their most important business."[1]

Moreover, delay resulting from the lack of knowledge or improper application of the patent statutes, rules of practice or the Manual of Patent Examining Procedure, however, does not constitute "unavoidable" delay.[2]

To establish non-receipt of an Office action, a petitioner:

> must state that the Office action was not received at the correspondence address of record, and that a search of the practitioner's record(s), including any file jacket or the equivalent, and the application contents, indicates that the Office action was not received. A copy of the record(s) used by the practitioner where the non-received Office action would have been entered had it been received is required.[3]

In addition, the Manual of Patent Examining Procedure § 711.03(c) also states:

> A copy of the practitioner's record(s) required to show non-receipt of the Office action should include the master docket for the firm. That is, if a three month period for reply was set in the non-received Office action, a copy of the master docket report showing all replies docketed for a date three months from the mail date of the non-received Office action must be submitted as documentary proof of

---

[1] In re Mattulath, 38 App. D.C. 497, 514-15 (1912)(*quoting* Ex parte Pratt, 1887 Dec. Comm'r Pat. 31, 32-33 (1887)); see also Winkler v. Ladd, 221 F. Supp. 550, 552, 138 U.S.P.Q. 666, 167-68 (D.D.C. 1963), aff'd, 143 U.S.P.Q. 172 (D.C. Cir. 1963); Ex parte Henrich, 1913 Dec. Comm'r Pat. 139, 141 (1913).

[2] See Haines, 673 F. Supp. at 317, 5 U.S.P.Q. 2d at 1132; Vincent v. Mossinghoff, 230 U.S.P.Q. 621, 624 (D.D.C. 1985); Smith v. Diamond, 209 U.S.P.Q. 1091 (D.D.C. 1981); Potter v. Dann, 201 U.S.P.Q. 574 (D.D.C. 1978); Ex parte Murray, 1891 Dec. Comm'r Pat. 130, 131 (1891).

[3] MPEP 711.03(c).

nonreceipt of the Office action. If no such master docket exists, the practitioner should so state and provide other evidence such as, but not limited to, the following: the application file jacket; incoming mail log; calendar; reminder system; or the individual docket record for the application in question.

With the instant renewed petition, petitioner still has not submitted a copy of a master docket record showing all his replies docketed for a due date of December 15, 2008. Rather, petitioner has only submitted a copy of an incoming mail log for correspondence received from the Patent and Trademark Office from September 16, 2008 to October 16, 2008. If no master docket exists showing all replies **docketed** for a **due date** of December 15, 2008, petitioner should so state for the record.

While the showing of record is not sufficient to establish to the satisfaction of the Commissioner that the delay was unavoidable, petitioner is not precluded from obtaining relief by filing a petition pursuant to **37 CFR 1.137(b)** on the basis of **unintentional** delay. A grantable petition pursuant to 37 CFR 1.137(b) must be accompanied by (1) The reply required to the outstanding Office action or notice, unless previously filed; (2) The petition fee as set forth in 37 CFR 1.17(m); (3) A statement that the entire delay in filing the required reply from the due date for the reply until the filing of a grantable petition pursuant to this paragraph was unintentional; and (4) Any terminal disclaimer (and fee as set forth in § 1.20(d)) required pursuant to paragraph (d) of this section.

Further correspondence with respect to this matter should be addressed as follows:

By mail: Mail Stop Petitions
Commissioner for Patents
P.O. Box 1450
Alexandria VA 22313-1450

By FAX: (571)273-8300
Attn: Office of Petitions

Telephone inquiries related to this decision should be directed to the undersigned at (571)272-3207.

Cliff Congo
Petitions Attorney
Office of Petitions

UNITED STATES PATENT AND TRADEMARK OFFICE

Commissioner for Patents
United States Patent and Trademark Office
P.O. Box 1450
Alexandria, VA 22313-1450
www.uspto.gov

WESTMAN CHAMPLIN (MICROSOFT CORPORATION)
SUITE 1400
900 SECOND AVENUE SOUTH
MINNEAPOLIS MN 55402

COPY MAILED

MAR 30 2009

OFFICE OF PETITIONS

In re Application of	:	
Corston-Oliver, et al.	:	
Application No. 10/979,531	:	ON PETITION
Filed: November 2, 2004	:	
Attorney Docket No. M61.12-0778	:	

This is a decision on the renewed petition to revive under 37 CFR 1.137(a), filed March 6, 2009.

The petition under 37 CFR 1.137(a) is **GRANTED**.

The above-identified application became abandoned for failure to timely pay the issue fee in response to the Notice of Allowance mailed September 15, 2008. This Notice set an extendable period for reply of three (3) months. No issue fee having been received, the application became abandoned on December 16, 2008. A Notice of Abandonment was mailed on January 9, 2009. Applicants filed a petition to revive under 37 CFR 1.137(a) on January 23, 2009, arguing that they never received the Notice of Allowance. However, the petition was dismissed in a decision mailed on February 17, 2009. The petition was dismissed because applicants failed to submit a copy of a master docket report, showing all their replies docketed for a due date of December 15, 2008.

A grantable petition under 37 CFR 1.137(a) must be accompanied by: (1) the reply required to the outstanding Office action or notice, unless previously filed; (2) the petition fee set forth in 37 CFR 1.17(l); (3) a showing to the satisfaction of the Commissioner that the entire delay in filing the required reply from the due date for the reply until the filing of a grantable petition pursuant to this paragraph was unavoidable; and (4) Any terminal disclaimer (and fee as set forth in § 1.20(d))

required pursuant to paragraph (d) of this section.

Decisions on reviving abandoned applications on the basis of "unavoidable" delay have adopted the reasonably prudent person standard in determining if the delay was unavoidable: "The word 'unavoidable' ... is applicable to ordinary human affairs, and requires no more or greater care or diligence than is generally used and observed by prudent and careful men in relation to their most important business."[1]

Moreover, delay resulting from the lack of knowledge or improper application of the patent statutes, rules of practice or the Manual of Patent Examining Procedure, however, does not constitute "unavoidable" delay.[2]

To establish non-receipt of an Office action, a petitioner:

> must state that the Office action was not received at the correspondence address of record, and that a search of the practitioner's record(s), including any file jacket or the equivalent, and the application contents, indicates that the Office action was not received. A copy of the record(s) used by the practitioner where the non-received Office action would have been entered had it been received is required.[3]

In addition, the Manual of Patent Examining Procedure § 711.03(c) also states:

> A copy of the practitioner's record(s) required to show non-receipt of the Office action should include the master docket for the firm. That is, if a three month period for reply was set in the non-received Office action, a copy of the master docket report showing all replies docketed for a date three months from the mail date of the non-received Office action must be submitted as documentary proof of nonreceipt of the Office action. If no such master docket

---

[1] In re Mattulath, 38 App. D.C. 497, 514-15 (1912)(*quoting* Ex parte Pratt, 1887 Dec. Comm'r Pat. 31, 32-33 (1887)); see also Winkler v. Ladd, 221 F. Supp. 550, 552, 138 U.S.P.Q. 666, 167-68 (D.D.C. 1963), aff'd, 143 U.S.P.Q. 172 (D.C. Cir. 1963); Ex parte Henrich, 1913 Dec. Comm'r Pat. 139, 141 (1913).

[2] See Haines, 673 F. Supp. at 317, 5 U.S.P.Q. 2d at 1132; Vincent v. Mossinghoff, 230 U.S.P.Q. 621, 624 (D.D.C. 1985); Smith v. Diamond, 209 U.S.P.Q. 1091 (D.D.C. 1981); Potter v. Dann, 201 U.S.P.Q. 574 (D.D.C. 1978); Ex parte Murray, 1891 Dec. Comm'r Pat. 130, 131 (1891).

[3] MPEP 711.03(c).

> exists, the practitioner should so state and provide other evidence such as, but not limited to, the following: the application file jacket; incoming mail log; calendar; reminder system; or the individual docket record for the application in question.

With the instant petition, applicants have submitted a copy of a master docket report, showing all of their replies docketed for a due date of December 15, 2008. An entry for the instant application is absent, supporting the conclusion that the Notice of Allowance was not received.

The application is being forwarded to the Office of Data Management for processing into a patent.

Telephone inquiries related to this decision should be directed to the undersigned at (571)272-3207.

Cliff Congo
Petitions Attorney
Office of Petitions

UNITED STATES PATENT AND TRADEMARK OFFICE

Commissioner for Patents
United States Patent and Trademark Office
P.O. Box 1450
Alexandria, VA 22313-1450
www.uspto.gov

Patent No. : 7,261,369
Ser. No. : 10/979,538
Inventor(s) : Ahad
Issued : Aug. 28, 2007
Title : CONVERTIBLE AIRCRAFT PASSENGER SEAT

Docket No. : 8500-005

Re: Request for Certificate of Correction

Consideration has been given your request for the issuance of a certificate of correction for the above-identified patent under the provisions of Rule(s) 1.322 and/or 1.323.

Assignees' names and addresses (assignment data) printed in a patent, are based *solely* on information supplied in the appropriate space for identifying the assignment data, i.e., item 3 of the Issue Fee Transmittal Form PTOL-85B. Granting of a request under 37 CFR 3.81(b) is required to correct applicant's error providing ***incorrect or erroneous*** assignment data, *before* issuance of a Certificate of Correction, under 37 CFR 1.323 *(see Manual of Patent Examining Procedures (M.P.E.P) Chp.1400, sect. 1481).* This procedure is required *at any time after the issue fee is paid*, including after issuance of the patent.

In view of the foregoing, your request, in this mater, is hereby denied.

A request to correct the Assignee under 37 CFR 3.81(b) should include:

A. **the processing fee set forth in 37 CFR 1.117(h) (currently $130);**
B. a statement that the failure to include the correct assignee name on the PTOL-85B was inadvertent; and
C. a copy of the Notice of Recordation of Assignment Document, reflecting the reel and frame number where the assignment(s) is recorded and/or reflecting proof of *the date* the assignment was submitted for recordation.

In the Request, Applicant(s) may request that the file be forwarded to Certificates of Correction Branch, for issuance of a Certificate of Correction, if the Request is granted.

Any request under 37 CFR 3.81(b) should be directed to the following address or facsimile number:

By mail: Mail Stop PETITIONS
Commissioner for Patents
Post Office Box 1450
Alexandria, VA 22313-1450

By hand: Customer Service Window
Mail Stop Petitions
Randolph Building
40l Dulany Street
Alexandria, VA 22314

By fax: (571) 273-0025
ATTN: Office of Petitions

If a fee (currently $100) was previously submitted for consideration of a Request for Certificate of Correction, under CFR 1.323, to correct assignment data, , no additional fee is required.

Ennis Young
For Mary Diggs
Decisions & Certificates
of Correction Branch
(703) 308-9390 ext. 117 or (703) 308-8309

UNITED STATES PATENT AND TRADEMARK OFFICE

Commissioner for Patents
United States Patent and Trademark Office
P.O. Box 1450
Alexandria, VA 22313-1450
www.uspto.gov

MACCORD MASON PLLC
300 N. GREENE STREET, SUITE 1600
P.O. BOX 2974
GREENSBORO NC 27402

COPY MAILED

DEC 1 0 2008

OFFICE OF PETITIONS

In re Patent No. 7,261,369	:	
Application No. 10/979,538	:	
Filed: November 2, 2004	:	ON PETITION
Issued: August 28, 2007	:	
Attorney Docket No. 8500-005	:	

This is a decision on the petition filed November 13, 2008, which is being treated as a request under 37 CFR 3.81(b)[1] to add the name of the assignee on the front page of the above-identified patent by way of a Certificate of Correction.

The request is **GRANTED**.

This matter is being referred to the Certificates of Correction Branch for issuance of the requested Certificate of Correction.

Telephone inquiries concerning this decision may be directed to Joan Olszewski at (571) 272-7751. Inquiries regarding the issuance of a certificate of correction should be directed to the Certificate of Correction Branch at (571) 272-4200.

/Liana Walsh/
Liana Walsh
Petitions Examiner
Office of Petitions

[1] *See* MPEP 1309, subsection II; and Official Gazette of June 22, 2004.

UNITED STATES PATENT AND TRADEMARK OFFICE

Commissioner for Patents
United States Patent and Trademark Office
P.O. Box 1450
Alexandria, VA 22313-1450
www.uspto.gov

LOUIS J. WILLE
BRISTOL-MYERS SQUIBB COMPANY
PATENT DEPARTMENT
P.O. BOX 4000
PRINCETON, NJ 08543-4000

COPY MAILED

AUG 14 2006

OFFICE OF PETITIONS

In re Application of	:	
Sanjeev H. Kothair et al	:	
Application No. 10/979,556	:	ON PETITION
Filed: November 2, 2004	:	
Attorney Docket No. CT2545B-CON	:	

This is a decision on the petition under 37 CFR 1.137(b), filed November 10, 2005, to revive the above-identified application.

The petition is **GRANTED.**

The above-identified application became abandoned for failure to reply in a timely manner to the Notice to File Missing Parts of Nonprovisional Application (Notice) mailed February 16, 2005. The Notice set a period for reply of two (2) months from the mail date of the Notice. No extensions of time under the provisions of 37 CFR 1.136(a) were obtained. Accordingly, the above-identified application became abandoned on April 17, 2005.

Telephone inquiries concerning this decision should be directed to Irvin Dingle at (571) 272-3210.

This matter is being referred to the Initial Patent Examination Unit.

Irvin Dingle
Petitions Examiner
Office of Petitions

UNITED STATES PATENT and TRADEMARK OFFICE
UNDER SECRETARY OF COMMERCE FOR INTELLECTUAL PROPERTY AND
DIRECTOR OF THE UNITED STATES PATENT AND TRADEMARK OFFICE
WASHINGTON, D.C. 20231
WWW.USPTO.GOV

MAR 16 2005

In re Application of	:	ap
Erich Weerth	:	DECISION ON
Serial No. 10/979,580	:	PETITION UNDER
Filed: November 01, 2004	:	M.P.E.P. 708.02(XI)
For: BLAST RESISTANT LINER FOR USE IN	:	
LIMITED ACCESS ENCLOSURES	:	

This is in response to the petition filed January 18, 2005 requesting that the above-identified application be granted Special Status under Sections 37 CFR 102(c) and 708.02 (XI) of the MPEP.

The petition has been considered and found not to comply with the requirements set forth under the above-noted section. The petition for special status should be accompanied by a statement explaining how the invention contributes to countering terrorism. Accordingly, the petition is DENIED.

Richard Crispino, Special Program Examiner
Technology Center 1700
Chemical and Materials Engineering

MARK RODGERS
1590 SAN ROQUE ROAD
SANTA BARBARA CA 93105