UNITED STATES PATENT AND TRADEMARK OFFICE

UNITED STATES DEPARTMENT OF COMMERCE
United States Patent and Trademark Office
Address: COMMISSIONER FOR PATENTS
P.O. Box 1450
Alexandria, Virginia 22313-1450
www.uspto.gov

APPL NO.	FILING OR 371 (c) DATE	ART UNIT	FIL FEE REC'D	ATTY.DOCKET NO	DRAWINGS	TOT CLMS	IND CLMS
11/065,725	02/24/2005	2835	1300	16356.902 (DC-07891)	12	22	4

CONFIRMATION NO. 2319

CORRECTED FILING RECEIPT

OC000000016273786

000027683
HAYNES AND BOONE, LLP
901 MAIN STREET, SUITE 3100
DALLAS, TX 75202

Date Mailed: 06/14/2005

Receipt is acknowledged of this regular Patent Application. It will be considered in its order and you will be notified as to the results of the examination. Be sure to provide the U.S. APPLICATION NUMBER, FILING DATE, NAME OF APPLICANT, and TITLE OF INVENTION when inquiring about this application. Fees transmitted by check or draft are subject to collection. Please verify the accuracy of the data presented on this receipt. **If an error is noted on this Filing Receipt, please mail to the Commissioner for Patents P.O. Box 1450 Alexandria Va 22313-1450. Please provide a copy of this Filing Receipt with the changes noted thereon. If you received a "Notice to File Missing Parts" for this application, please submit any corrections to this Filing Receipt with your reply to the Notice. When the USPTO processes the reply to the Notice, the USPTO will generate another Filing Receipt incorporating the requested corrections (if appropriate).**

Applicant(s)

Christopher Muenzer, Austin, TX;
David J. Hernandez, Round Rock, TX;

Assignment For Published Patent Application

Dell Products L.P., Round Rock, TX

Power of Attorney:

Warren Kice–22732
James Bell–26528
Henry Garrana–27887
David McCombs–32271
Michael Davis Jr–35488
Anthony Peterman–38270
James Harris–40013
David O'Dell–42044
Chad Anson–44510

Domestic Priority data as claimed by applicant

Foreign Applications

If Required, Foreign Filing License Granted: 03/24/2005

The country code and number of your priority application, to be used for filing abroad under the Paris Convention, is US11/065,725

Projected Publication Date: 08/24/2006

BEST AVAILABLE COPY

Non-Publication Request: No

Early Publication Request: No

Title

Method and apparatus for securing a modular component in a chassis

Preliminary Class

361

LICENSE FOR FOREIGN FILING UNDER
Title 35, United States Code, Section 184
Title 37, Code of Federal Regulations, 5.11 & 5.15

GRANTED

The applicant has been granted a license under 35 U.S.C. 184, if the phrase "IF REQUIRED, FOREIGN FILING LICENSE GRANTED" followed by a date appears on this form. Such licenses are issued in all applications where the conditions for issuance of a license have been met, regardless of whether or not a license may be required as set forth in 37 CFR 5.15. The scope and limitations of this license are set forth in 37 CFR 5.15(a) unless an earlier license has been issued under 37 CFR 5.15(b). The license is subject to revocation upon written notification. The date indicated is the effective date of the license, unless an earlier license of similar scope has been granted under 37 CFR 5.13 or 5.14.

This license is to be retained by the licensee and may be used at any time on or after the effective date thereof unless it is revoked. This license is automatically transferred to any related applications(s) filed under 37 CFR 1.53(d). This license is not retroactive.

The grant of a license does not in any way lessen the responsibility of a licensee for the security of the subject matter as imposed by any Government contract or the provisions of existing laws relating to espionage and the national security or the export of technical data. Licensees should apprise themselves of current regulations especially with respect to certain countries, of other agencies, particularly the Office of Defense Trade Controls, Department of State (with respect to Arms, Munitions and Implements of War (22 CFR 121-128)); the Office of Export Administration, Department of Commerce (15 CFR 370.10 (j)); the Office of Foreign Assets Control, Department of Treasury (31 CFR Parts 500+) and the Department of Energy.

NOT GRANTED

No license under 35 U.S.C. 184 has been granted at this time, if the phrase "IF REQUIRED, FOREIGN FILING LICENSE GRANTED" DOES NOT appear on this form. Applicant may still petition for a license under 37 CFR 5.12, if a license is desired before the expiration of 6 months from the filing date of the application. If 6 months has lapsed from the filing date of this application and the licensee has not received any indication of a secrecy order under 35 U.S.C. 181, the licensee may foreign file the application pursuant to 37 CFR 5.15(b).

UNITED STATES PATENT AND TRADEMARK OFFICE

UNITED STATES DEPARTMENT OF COMMERCE
United States Patent and Trademark Office
Address: COMMISSIONER FOR PATENTS
P.O. Box 1450
Alexandria, Virginia 22313-1450
www.uspto.gov

ST. JUDE MEDICAL NEUROMODULATION DIVISION
6901 PRESTON ROAD
PLANO, TX 75024

Mail Date: 04/23/2010

Applicant	: John H. Erickson	: DECISION ON REQUEST FOR
Patent Number	: 7588046	: RECALCULATION of PATENT
Issue Date	: 09/15/2009	: TERM ADJUSTMENT IN VIEW
Application No	: 11/065,726	: OF WYETH AND NOTICE OF INTENT TO
Filed	: 02/25/2005	: ISSUE CERTIFICATE OF CORRECTION
		:

The Request for Recalculation is **GRANTED** to the extent indicated.

The patent term adjustment has been determined to be **1231** days. The USPTO will *sua sponte* issue a certificate of correction reflecting the amount of PTA days determined by the recalculation.

Prior to the issuance of the certificate of correction, the USPTO will afford patentee an opportunity to be heard and request reconsideration. Accordingly, patentee has **one month or thirty (30) days**, whichever is longer, to file a request for reconsideration of this patent term adjustment calculation. See 35 U.S.C. 154(b)(3)(B)(ii) and 37 CFR 1.322(a)(4). No extensions of time will be granted under 37 CFR 1.136.

Patentee should use document code PET.OP if electronically filing a request for reconsideration of this patent term adjustment calculation. The patentee must also include the information required by 37 CFR 1.705(b)(2) and the fee required by 37 CFR 1.18(e). If patentee does not file a timely request for reconsideration of this patent term adjustment calculation including the information required by 37 CFR 1.705(b)(2) and the fee required by 37 CFR 1.18(e), the USPTO will issue a certificate of correction reflecting the PTA determination noted above.

Patentee should be aware that in order to preserve the right to review in the United States District Court for the District of Columbia of the USPTO patent term adjustment determination, patentee must ensure that he or she also take the steps required under 35 U.S.C. 154(b)(4)(A) in a timely manner. Nothing in the request for recalculation should be construed as providing an alternative time frame for commencing a civil action under 35 U.S.C. 154(b)(4)(A).

Any questions concerning this decision should be directed to the Office of Patent Legal Administration at 571-272-7702.

UNITED STATES PATENT AND TRADEMARK OFFICE

Commissioner for Patents
United States Patent and Trademark Office
P.O. Box 1450
Alexandria, VA 22313-1450
www.uspto.gov

SHAWN HUNTER
P.O. BOX 270110
HOUSTON TX 77277-0110

COPY MAILED

MAR 25 2008

OFFICE OF PETITIONS

In re Application of
CORONADO, MARTIN P.
Application No. 11/065,741
Filed: 02/25/2005
Attorney Docket No. 304-36024-US

DECISION ON PETITION

This is a decision on the petition under 37 CFR.1.181, filed February 25, 2008, to withdraw the holding of abandonment in the above-identified application.

The petition is **GRANTED**.

This application was held abandoned for failure to timely respond to the nonfinal Office action, mailed on July 26, 2007, which set a three-month shortened statutory period for reply. Accordingly, a reply was due on or before October 26, 2007. In the absence of a timely reply, the Office mailed a Notice of Abandonment on February 8, 2008.

Petitioner stated that he timely mailed a reply in the form of an amendment via certificate of mailing on August 20, 2007. Petitioner submitted a copy of the previously mailed reply, accompanied by a signed certificate of mailing, indicating that the correspondence was being deposited in the U.S. Postal Service as first class mail on August 20, 2007.

The file record does not include the original reply in the form of an amendment. Failure to receive correspondence which includes a certificate of mailing or certificate of facsimile transmission is addressed in 37 CFR 1.8(b), reproduced below:

> In the event that correspondence is considered timely filed by being mailed or transmitted in accordance with paragraph (a) of this section, but not received in the U.S. Patent and Trademark Office after a reasonable amount of time has elapsed from the time of mailing or transmitting of the correspondence, or after the application is held to be abandoned, or after the proceeding is dismissed, terminated, or decided with prejudice, the correspondence will be considered timely if the party who forwarded such correspondence:

(1) Informs the Office of the previous mailing or transmission of the correspondence promptly after becoming aware that the Office has no evidence of receipt of the correspondence;

(2) Supplies an additional copy of the previously mailed or transmitted correspondence and certificate; and

(3) Includes a statement which attests on a personal knowledge basis or to the satisfaction of the Director to the previous timely mailing or transmission. If the correspondence was sent by facsimile transmission, a copy of the sending unit's report confirming transmission may be used to support this statement.

The petition satisfies the above requirements of 37 CFR 1.8(b). Accordingly, the holding of abandonment for failure to timely file a reply to the nonfinal Office action is hereby withdrawn and the application restored to pending status.

The copy of the reply received with the petition will be accepted in place of the reply shown to have been mailed on August 20, 2007.

This application is being referred to Technology Center AU 3676 for appropriate action in the normal course of business on the reply received with petition.

Telephone inquires specific to this decision may be directed to the undersigned at (571) 272-3211.

Christina T. Donnell

Christina Tartera Donnell
Senior Petitions Attorney
Office of Petitions

UNITED STATES PATENT AND TRADEMARK OFFICE

UNITED STATES DEPARTMENT OF COMMERCE
United States Patent and Trademark Office
Address: COMMISSIONER FOR PATENTS
P.O. Box 1450
Alexandria, Virginia 22313-1450
www.uspto.gov

MCKEE, VOORHEES & SEASE, P.L.C.
ATTN: PENNSYLVANIA STATE UNIVERSITY
801 GRAND AVENUE, SUITE 3200
DES MOINES, IA 50309-2721

Mail Date: 04/20/2010

Applicant	: Jeffrey M. Catchmark	: DECISION ON REQUEST FOR
Patent Number	: 7585334	: RECALCULATION of PATENT
Issue Date	: 09/08/2009	: TERM ADJUSTMENT IN VIEW
Appliction No	: 11/065,742	: OF WYETH AND NOTICE OF INTENT TO
Filed	: 02/25/2005	: ISSUE CERTIFICATE OF CORRECTION
		:

The Request for Recalculation is **GRANTED** to the extent indicated.

The patent term adjustment has been determined to be **535** days. The USPTO will *sua sponte* issue a certificate of correction reflecting the amount of PTA days determined by the recalculation.

Prior to the issuance of the certificate of correction, the USPTO will afford patentee an opportunity to be heard and request reconsideration. Accordingly, patentee has **one month or thirty (30) days**, whichever is longer, to file a request for reconsideration of this patent term adjustment calculation. See 35 U.S.C. 154(b)(3)(B)(ii) and 37 CFR 1.322(a)(4). No extensions of time will be granted under 37 CFR 1.136.

Patentee should use document code PET.OP if electronically filing a request for reconsideration of this patent term adjustment calculation. The patentee must also include the information required by 37 CFR 1.705(b)(2) and the fee required by 37 CFR 1.18(e). If patentee does not file a timely request for reconsideration of this patent term adjustment calculation including the information required by 37 CFR 1.705(b)(2) and the fee required by 37 CFR 1.18(e), the USPTO will issue a certificate of correction reflecting the PTA determination noted above.

Patentee should be aware that in order to preserve the right to review in the United States District Court for the District of Columbia of the USPTO patent term adjustment determination, patentee must ensure that he or she also take the steps required under 35 U.S.C. 154(b)(4)(A) in a timely manner. Nothing in the request for recalculation should be construed as providing an alternative time frame for commencing a civil action under 35 U.S.C. 154(b)(4)(A).

Any questions concerning this decision should be directed to the Office of Patent Legal Administration at 571-272-7702.

UNITED STATES PATENT AND TRADEMARK OFFICE

Commissioner for Patents
United States Patent and Trademark Office
P.O. Box 1450
Alexandria, VA 22313-1450
www.uspto.gov

DAVIS, BROWN, KOEHN, SHORS & ROBERTS, P.C.
THE FINANCIAL CENTER
666 WALNUT STREET, SUTIE 2500
DES MOINES IA 50309-3993

COPY MAILED

APR 2 6 2007

OFFICE OF PETITIONS

In re Application of	:	
Dwayne Fosseen	:	
Application No. 11/065,743	:	ON PETITION
Filed: February 25, 2005	:	
Attorney Docket No. 5592320/65800	:	

This is a decision on the petition under 37 CFR 1.137(b), filed January 16, 2007, to revive the above-identified application.

The petition is **DISMISSED**.

Any request for reconsideration of this decision must be submitted within TWO (2) MONTHS from the mail date of this decision. Extensions of time under 37 CFR 1.136(a) are permitted. The reconsideration request should include a cover letter entitled "Renewed Petition under 37 CFR 1.137(b)." This is **not** final agency action within the meaning of 5 U.S.C. § 704.

A grantable petition under 37 CFR 1.137(b)[1] must be accompanied by: (1) the required reply,[2] unless previously filed; (2) the petition fee as set forth in 37 CFR 1.17(m); (3) a statement that the entire delay in filing the required reply from the due date for the reply until the filing of a grantable petition pursuant to 37 CFR 1.137(b) was unintentional; and (4) any terminal disclaimer (and fee as set forth in 37 CFR 1.20(d)) required by 37 CFR 1.137(c). Where there is a question as to whether either the abandonment or the delay in filing a petition under 37 CFR 1.137 was unintentional, the Commissioner may require additional information. See MPEP 711.03(c)(III)(C) and (D). The instant petition lack(s) item(s) (1).

The Terminal Disclaimer submitted with the petition on January 16, 2007 is not signed by an attorney of record.

---

[1] As amended effective December 1, 1997. See Changes to Patent Practice and Procedure; Final Rule Notice, 62 Fed. Reg. 53131, 53194-95 (October 10, 1997), 1203 Off. Gaz. Pat. Office 63, 119-20 (October 21, 1997).

[2] In a nonprovisional application abandoned for failure to prosecute, the required reply may be met by the filing of a continuing application. In an application or patent, abandoned or lapsed for failure to pay the issue fee or any portion thereof, the required reply must be the payment of the issue fee or any outstanding balance thereof.

Further correspondence with respect to this matter should be addressed as follows:

By mail: Mail Stop PETITIONS
Commissioner for Patents
Post Office Box 1450
Alexandria, VA 22313-1450

By hand: Customer Window located at:

Randolph Building
401 Dulany Street
Alexandria, VA 22314

By fax: (571) 273-8300
ATTN: Office of Petitions

Telephone inquiries concerning this decision should be directed to the undersigned at (571) 272-3208.

Karen Creasy
Petitions Examiner
Office of Petitions

UNITED STATES PATENT AND TRADEMARK OFFICE

Commissioner for Patents
United States Patent and Trademark Office
P.O. Box 1450
Alexandria, VA 22313-1450
www.uspto.gov

DAVIS, BROWN, KOEHN, SHORS & ROBERTS, P.C.
THE FINANCIAL CENTER
666 WALNUT STREET
SUITE 2500
DES MOINES IA 50309-3993

COPY MAILED

JAN 10 2008

OFFICE OF PETITIONS

In re Application of	:	
Dwayne Fosseen	:	
Application No. 11/065,743	:	DECISION GRANTING PETITION
Filed: February 25, 2005	:	UNDER 37 CFR 1.137(b)
Attorney Docket No. 5592320/65800	:	

This is a decision on the renewed petition under 37 CFR 1.137(b), filed June 20, 2007, to revive the above-identified application.

The petition is **GRANTED**.

The petition satisfies the conditions for revival pursuant to the provisions of 37 CFR 1.137(b) in that (1) the reply in the form of an amendment and a terminal disclaimer; (2) the petition fee; and (3) the required statement of unintentional delay have been received. Accordingly, the reply to the Nonfinal Rejection of April 6, 2006, is accepted as having been unintentionally delayed.

Telephone inquiries concerning this decision should be directed to the undersigned at (571) 272-3208.

This matter is being referred to Technology Center AU 3747 to consider the amendment of January 16, 2007.

Karen Creasy

Karen Creasy
Petitions Examiner
Office of Petitions

UNITED STATES PATENT AND TRADEMARK OFFICE

Commissioner for Patents
United States Patent and Trademark Office
P.O. Box 1450
Alexandria, VA 22313-1450
www.uspto.gov

DORSEY & WHITNEY, LLP
INTELLECTUAL PROPERTY DEPARTMENT
370 SEVENTEENTH STREET
SUITE 4700
DENVER CO 80202-5647

COPY MAILED

NOV 28 2006

OFFICE OF PETITIONS

In re Application of	:	
Douglas A. Crawford et al	:	
Application No. 11/065,746	:	DECISION ON PETITION
Filed: February 25, 2005	:	UNDER 37 CFR 1.78(a)(6)
Attorney Docket No. 34103/US/2	:	

This is a decision on the petition filed June 28, 2006, which is being treated as a petition under 37 CFR 1.78(a)(6), to accept an unintentionally delayed claim under 35 U.S.C. § 119 for the benefit of priority to the prior-filed provisional applications set forth in the amendment filed with the petition.

The petition is **GRANTED**.

A petition for acceptance of a claim for late priority under 37 CFR 1.78(a)(6) is only applicable to those applications filed on or after November 29, 2000. Further, the petition is appropriate only after the expiration of the period specified in 37 CFR 1.78(a)(5)(ii). In addition, the petition under 37 CFR 1.78(a)(6) must be accompanied by:

(1) the reference required by 35 U.S.C. § 119 and 37 CFR 1.78(a)(5)(i) of the prior-filed application, unless previously submitted;
(2) the surcharge set forth in § 1.17(t); and
(3) a statement that the entire delay between the date the claim was due under 37 CFR 1.78(a)(5)(ii) and the date the claim was filed was unintentional. The Director may require additional information where there is a question whether the delay was unintentional.

All the above requirements having been satisfied, the late claim for priority under 35 U.S.C. § 119 is accepted as being unintentionally delayed.

The granting of the petition to accept the delayed benefit claim to the prior-filed applications under 37 CFR 1.78(a)(6) should not be construed as meaning that this application is entitled to the benefit of the prior-filed applications. In order for this application to be entitled to the benefit of the prior-filed applications, all other requirements under 35 U.S.C. § 119 and 37 CFR 1.78(a)(4) and (a)(5) must be met. Similarly, the fact that the corrected Filing Receipt accompanying this decision on petition includes the prior-filed applications should not be construed as meaning that applicant is entitled to the claim for benefit of priority to the prior-filed applications noted thereon. Accordingly, the examiner will, in due course, consider this benefit claim and determine whether the application is entitled to the benefit of the earlier filing date.

A corrected Filing Receipt, which includes the priority claim to the prior-filed provisional applications, accompanies this decision on petition.

Any inquiries concerning this decision may be directed to the undersigned at (571) 272-3208. All other inquiries concerning either the examination procedures or status of the application should be directed to the Technology Center.

This application is being forwarded to Technology Center Art Unit 3764 for appropriate action on the amendment filed June 28, 2006, including consideration by the examiner of applicant's entitlement to claim benefit of priority under 35 U.S.C. § 119 to the prior-filed applications.

Karen Creasy

Karen Creasy
Petitions Examiner
Office of Petitions

ATTACHMENT: Corrected Filing Receipt

UNITED STATES PATENT AND TRADEMARK OFFICE

UNITED STATES DEPARTMENT OF COMMERCE
United States Patent and Trademark Office
Address: COMMISSIONER FOR PATENTS
P.O. Box 1450
Alexandria, Virginia 22313-1450
www.uspto.gov

APPL NO.	FILING OR 371 (c) DATE	ART UNIT	FIL FEE REC'D	ATTY.DOCKET NO	DRAWINGS	TOT CLMS	IND CLMS
11/065,746	02/25/2005	3764	1830	34103/US/2	51	34	2

CONFIRMATION NO. 6639
CORRECTED FILING RECEIPT
OC000000021373077
OC000000021373077

20686
DORSEY & WHITNEY, LLP
INTELLECTUAL PROPERTY DEPARTMENT
370 SEVENTEENTH STREET
SUITE 4700
DENVER, CO 80202-5647

Date Mailed: 11/27/2006

Receipt is acknowledged of this regular Patent Application. It will be considered in its order and you will be notified as to the results of the examination. Be sure to provide the U.S. APPLICATION NUMBER, FILING DATE, NAME OF APPLICANT, and TITLE OF INVENTION when inquiring about this application. Fees transmitted by check or draft are subject to collection. Please verify the accuracy of the data presented on this receipt. **If an error is noted on this Filing Receipt, please mail to the Commissioner for Patents P.O. Box 1450 Alexandria Va 22313-1450. Please provide a copy of this Filing Receipt with the changes noted thereon. If you received a "Notice to File Missing Parts" for this application, please submit any corrections to this Filing Receipt with your reply to the Notice. When the USPTO processes the reply to the Notice, the USPTO will generate another Filing Receipt incorporating the requested corrections (if appropriate).**

Applicant(s)

Douglas A. Crawford, Lafayette, CO;
Andrew P. Lull, Boulder, CO;

Assignment For Published Patent Application

Nautilus, Inc., Vancouver, WA

Power of Attorney: The patent practitioners associated with Customer Number **20686**.

Domestic Priority data as claimed by applicant

This application is a CIP of 10/789,182 02/26/2004
which claims benefit of 60/450,789 02/28/2003
and claims benefit of 60/451,104 02/28/2003
and claims benefit of 60/450,890 02/28/2003
This application 11/065,746
is a CIP of 10/789,294 02/26/2004
which claims benefit of 60/451,104 02/28/2003
and claims benefit of 60/450,789 02/28/2003
and claims benefit of 60/450,890 02/28/2003
This application 11/065,746
is a CIP of 10/789,579 02/26/2004
which claims benefit of 60/450,890 02/28/2003
and claims benefit of 60/450,789 02/28/2003
and claims benefit of 60/451,104 02/28/2003

Foreign Applications

If Required, Foreign Filing License Granted: 03/29/2005

The country code and number of your priority application, to be used for filing abroad under the Paris Convention, is US11/065,746

Projected Publication Date: Not Applicable

Non-Publication Request: No

Early Publication Request: No

Title

Upper body exercise and flywheel enhanced dual deck treadmills

Preliminary Class

482

PROTECTING YOUR INVENTION OUTSIDE THE UNITED STATES

Since the rights granted by a U.S. patent extend only throughout the territory of the United States and have no effect in a foreign country, an inventor who wishes patent protection in another country must apply for a patent in a specific country or in regional patent offices. Applicants may wish to consider the filing of an international application under the Patent Cooperation Treaty (PCT). An international (PCT) application generally has the same effect as a regular national patent application in each PCT-member country. The PCT process **simplifies** the filing of patent applications on the same invention in member countries, but **does not result** in a grant of "an international patent" and does not eliminate the need of applicants to file additional documents and fees in countries where patent protection is desired.

Almost every country has its own patent law, and a person desiring a patent in a particular country must make an application for patent in that country in accordance with its particular laws. Since the laws of many countries differ in various respects from the patent law of the United States, applicants are advised to seek guidance from specific foreign countries to ensure that patent rights are not lost prematurely.

Applicants also are advised that in the case of inventions made in the United States, the Director of the USPTO must issue a license before applicants can apply for a patent in a foreign country. The filing of a U.S. patent application serves as a request for a foreign filing license. The application's filing receipt contains further information and guidance as to the status of applicant's license for foreign filing.

Applicants may wish to consult the USPTO booklet, "General Information Concerning Patents" (specifically, the section entitled "Treaties and Foreign Patents") for more information on timeframes and deadlines for filing foreign patent applications. The guide is available either by contacting the USPTO Contact Center at 800-786-9199, or it can be viewed on the USPTO website at http://www.uspto.gov/web/offices/pac/doc/general/index.html.

For information on preventing theft of your intellectual property (patents, trademarks and copyrights), you may wish to consult the U.S. Government website, http://www.stopfakes.gov. Part of a Department of Commerce initiative, this website includes self-help "toolkits" giving innovators guidance on how to protect intellectual property in specific countries such as China, Korea and Mexico. For questions regarding patent enforcement issues, applicants may call the U.S. Government hotline at 1-866-999-HALT (1-866-999-4158).

LICENSE FOR FOREIGN FILING UNDER

Title 35, United States Code, Section 184
Title 37, Code of Federal Regulations, 5.11 & 5.15

GRANTED

The applicant has been granted a license under 35 U.S.C. 184, if the phrase "IF REQUIRED, FOREIGN FILING LICENSE GRANTED" followed by a date appears on this form. Such licenses are issued in all applications where the conditions for issuance of a license have been met, regardless of whether or not a license may be required as set forth in 37 CFR 5.15. The scope and limitations of this license are set forth in 37 CFR 5.15(a) unless an earlier license has been issued under 37 CFR 5.15(b). The license is subject to revocation upon written notification. The date indicated is the effective date of the license, unless an earlier license of similar scope has been granted under 37 CFR 5.13 or 5.14.

This license is to be retained by the licensee and may be used at any time on or after the effective date thereof unless it is revoked. This license is automatically transferred to any related applications(s) filed under 37 CFR 1.53(d). This license is not retroactive.

The grant of a license does not in any way lessen the responsibility of a licensee for the security of the subject matter as imposed by any Government contract or the provisions of existing laws relating to espionage and the national security or the export of technical data. Licensees should apprise themselves of current regulations especially with respect to certain countries, of other agencies, particularly the Office of Defense Trade Controls, Department of State (with respect to Arms, Munitions and Implements of War (22 CFR 121-128)); the Bureau of Industry and Security, Department of Commerce (15 CFR parts 730-774); the Office of Foreign Assets Control, Department of Treasury (31 CFR Parts 500+) and the Department of Energy.

NOT GRANTED

No license under 35 U.S.C. 184 has been granted at this time, if the phrase "IF REQUIRED, FOREIGN FILING LICENSE GRANTED" DOES NOT appear on this form. Applicant may still petition for a license under 37 CFR 5.12, if a license is desired before the expiration of 6 months from the filing date of the application. If 6 months has lapsed from the filing date of this application and the licensee has not received any indication of a secrecy order under 35 U.S.C. 181, the licensee may foreign file the application pursuant to 37 CFR 5.15(b).

UNITED STATES PATENT AND TRADEMARK OFFICE

Commissioner for Patents
United States Patent and Trademark Office
P.O. Box 1450
Alexandria, VA 22313-1450
www.uspto.gov

DORSEY & WHITNEY, LLP
INTELLECTUAL PROPERTY DEPARTMENT
370 SEVENTEENTH STREET
SUITE 4700
DENVER, CO 80202-5647

COPY MAILED

FEB 04 2008

OFFICE OF PETITIONS

In re Application of	:	
Douglas A. Crawford et al	:	
Application No. 11/065,746	:	DECISION ON PETITIONS
Filed: February 25, 2005	:	UNDER 37 CFR 1.78(a)(3) AND (a)(6)
Attorney Docket No. 34103/US/2	:	

This is a decision on the petition under 37 CFR §§ 1.78(a)(3), filed June 14, 2007, to accept an unintentionally delayed claim under 35 U.S.C. § 120 for benefit of priority to the prior-filed applications set forth in the concurrently filed amendment.

The petition is **DISMISSED AS MOOT**.

The petition is accompanied by an amendment to the first sentence of the specification following the title to include a reference to the prior-filed applications.

The petition is dismissed as moot because a petition under 37 CFR 37 CFR 1.78(a)(3) to accept an unintentionally delayed claim for benefit of priority to the prior-filed applications in the amendment filed with the instant petition was granted on November 28, 2006. The only change in the amendment was the order of the provisional applications and the deletion of provisional application 60/450,890 to application no. 10/789,294, which has been done.

In view of the above, the $1,370 petition fee submitted is unnecessary and will be refunded to petitioner's deposit account in due course.

Any questions concerning this decision on petition may be directed to the undersigned at (571) 272-3208. All other inquiries concerning either the examination procedures or status of the application should be directed to the Technology Center.

This application is being referred to Technology Center AU 3764 to consider the amendment filed June 14, 2007.

Karen Creasy
Petitions Examiner
Office of Petitions

Attachment: Corrected Filing Receipt

UNITED STATES PATENT AND TRADEMARK OFFICE

UNITED STATES DEPARTMENT OF COMMERCE
United States Patent and Trademark Office
Address: COMMISSIONER FOR PATENTS
P.O. Box 1450
Alexandria, Virginia 22313-1450
www.uspto.gov

APPLICATION NUMBER	FILING or 371(c) DATE	GRP ART UNIT	FIL FEE REC'D	ATTY.DOCKET.NO	TOT CLAIMS	IND CLAIMS
11/065,746	02/25/2005	3764	1830	34103/US/2	34	2

CONFIRMATION NO. 6639

CORRECTED FILING RECEIPT

OC000000028068675

20686
DORSEY & WHITNEY, LLP
INTELLECTUAL PROPERTY DEPARTMENT
370 SEVENTEENTH STREET
SUITE 4700
DENVER, CO 80202-5647

Date Mailed: 02/01/2008

Receipt is acknowledged of this non-provisional patent application. The application will be taken up for examination in due course. Applicant will be notified as to the results of the examination. Any correspondence concerning the application must include the following identification information: the U.S. APPLICATION NUMBER, FILING DATE, NAME OF APPLICANT, and TITLE OF INVENTION. Fees transmitted by check or draft are subject to collection. Please verify the accuracy of the data presented on this receipt. **If an error is noted on this Filing Receipt, please write to the Office of Initial Patent Examination's Filing Receipt Corrections. Please provide a copy of this Filing Receipt with the changes noted thereon. If you received a "Notice to File Missing Parts" for this application, please submit any corrections to this Filing Receipt with your reply to the Notice. When the USPTO processes the reply to the Notice, the USPTO will generate another Filing Receipt incorporating the requested corrections**

Applicant(s)

Douglas A. Crawford, Lafayette, CO;
Andrew P. Lull, Boulder, CO;

Assignment For Published Patent Application

Nautilus, Inc., Vancouver, WA

Power of Attorney: The patent practitioners associated with Customer Number 20686

Domestic Priority data as claimed by applicant

This application is a CIP of 10/789,182 02/26/2004
which claims benefit of 60/450,789 02/28/2003
and claims benefit of 60/450,890 02/28/2003
and claims benefit of 60/451,104 02/28/2003
This application 11/065,746
is a CIP of 10/789,294 02/26/2004
which claims benefit of 60/450,789 02/28/2003
and claims benefit of 60/451,104 02/28/2003
This application 11/065,746
is a CIP of 10/789,579 02/26/2004
which claims benefit of 60/450,789 02/28/2003
and claims benefit of 60/451,104 02/28/2003
and claims benefit of 60/450,890 02/28/2003

Foreign Applications

If Required, Foreign Filing License Granted: 03/29/2005

The country code and number of your priority application, to be used for filing abroad under the Paris Convention, is **US 11/065,746**

Projected Publication Date: Not Applicable

Non-Publication Request: No

Early Publication Request: No
Title

Upper body exercise and flywheel enhanced dual deck treadmills

Preliminary Class

482

PROTECTING YOUR INVENTION OUTSIDE THE UNITED STATES

Since the rights granted by a U.S. patent extend only throughout the territory of the United States and have no effect in a foreign country, an inventor who wishes patent protection in another country must apply for a patent in a specific country or in regional patent offices. Applicants may wish to consider the filing of an international application under the Patent Cooperation Treaty (PCT). An international (PCT) application generally has the same effect as a regular national patent application in each PCT-member country. The PCT process **simplifies** the filing of patent applications on the same invention in member countries, but **does not result** in a grant of "an international patent" and does not eliminate the need of applicants to file additional documents and fees in countries where patent protection is desired.

Almost every country has its own patent law, and a person desiring a patent in a particular country must make an application for patent in that country in accordance with its particular laws. Since the laws of many countries differ in various respects from the patent law of the United States, applicants are advised to seek guidance from specific foreign countries to ensure that patent rights are not lost prematurely.

Applicants also are advised that in the case of inventions made in the United States, the Director of the USPTO must issue a license before applicants can apply for a patent in a foreign country. The filing of a U.S. patent application serves as a request for a foreign filing license. The application's filing receipt contains further information and guidance as to the status of applicant's license for foreign filing.

Applicants may wish to consult the USPTO booklet, "General Information Concerning Patents" (specifically, the section entitled "Treaties and Foreign Patents") for more information on timeframes and deadlines for filing foreign patent applications. The guide is available either by contacting the USPTO Contact Center at 800-786-9199, or it can be viewed on the USPTO website at http://www.uspto.gov/web/offices/pac/doc/general/index.html.

For information on preventing theft of your intellectual property (patents, trademarks and copyrights), you may wish to consult the U.S. Government website, http://www.stopfakes.gov. Part of a Department of Commerce initiative, this website includes self-help "toolkits" giving innovators guidance on how to protect intellectual property in specific countries such as China, Korea and Mexico. For questions regarding patent enforcement issues, applicants may call the U.S. Government hotline at 1-866-999-HALT (1-866-999-4158).

LICENSE FOR FOREIGN FILING UNDER

Title 35, United States Code, Section 184

Title 37, Code of Federal Regulations, 5.11 & 5.15

GRANTED

The applicant has been granted a license under 35 U.S.C. 184, if the phrase "IF REQUIRED, FOREIGN FILING LICENSE GRANTED" followed by a date appears on this form. Such licenses are issued in all applications where the conditions for issuance of a license have been met, regardless of whether or not a license may be required as set forth in 37 CFR 5.15. The scope and limitations of this license are set forth in 37 CFR 5.15(a) unless an earlier license has been issued under 37 CFR 5.15(b). The license is subject to revocation upon written notification. The date indicated is the effective date of the license, unless an earlier license of similar scope has been granted under 37 CFR 5.13 or 5.14.

This license is to be retained by the licensee and may be used at any time on or after the effective date thereof unless it is revoked. This license is automatically transferred to any related applications(s) filed under 37 CFR 1.53(d). This license is not retroactive.

The grant of a license does not in any way lessen the responsibility of a licensee for the security of the subject matter as imposed by any Government contract or the provisions of existing laws relating to espionage and the national security or the export of technical data. Licensees should apprise themselves of current regulations especially with respect to certain countries, of other agencies, particularly the Office of Defense Trade Controls, Department of State (with respect to Arms, Munitions and Implements of War (22 CFR 121-128)); the Bureau of Industry and Security, Department of Commerce (15 CFR parts 730-774); the Office of Foreign AssetsControl, Department of Treasury (31 CFR Parts 500+) and the Department of Energy.

NOT GRANTED

No license under 35 U.S.C. 184 has been granted at this time, if the phrase "IF REQUIRED, FOREIGN FILING LICENSE GRANTED" DOES NOT appear on this form. Applicant may still petition for a license under 37 CFR 5.12, if a license is desired before the expiration of 6 months from the filing date of the application. If 6 months has lapsed from the filing date of this application and the licensee has not received any indication of a secrecy order under 35 U.S.C. 181, the licensee may foreign file the application pursuant to 37 CFR 5.15(b).

Attorney Docket No.: 34103/US/2

IN THE UNITED STATES PATENT AND TRADEMARK OFFICE

In re:

Inventors:	Douglas A. Crawford et al.	Confirmation No.: 6639
Appln. No.:	11/065,746	Group Art Unit: 3764
Filing Date:	February 25, 2005	Examiner: Crow, Stephen R.
Patent No.:	7,517,303 B2	
Issued:	April 14, 2009	
For:	UPPER BODY EXERCISE AND FLYWHEEL ENHANCED DUAL DECK TREADMILLS	

Commissioner for Patents
Attn.: Certificate of Corrections Branch
P.O. Box 1450
Alexandria, VA 22313-1450

REQUEST FOR CERTIFICATE OF CORRECTION OF PATENT FOR UNITED STATES PATENT AND TRADEMARK OFFICE MISTAKES UNDER 37 C.F.R. § 1.322(a)

Dear Sir:

Applicants respectfully request the issuance of a Certificate of Correction for U.S. patent No. 7,517,303, in order to correct the following United States Patent and Trademark Office errors:

1. Item (60), Related U.S. Application Data, the omission of: This application claims the benefit of U.S. application Nos. 60/548,787; 60/548,265; 60/548,786; and 60/548,811 filed on February 26, 2004.

Also attached hereto is Form PTO-1050, to be used for the Certificate of Correction.

Correction of the errors presented herein do not involve new matter or require re-examination.

The Applicant respectfully asks the Commissioner to grant this Request for Certificate of Correction addressing the errors noted herein.

Please send the Certificate of Correction to:

Lee R. Osman, Esq.
DORSEY & WHITNEY LLP
370 Seventeenth Street, Suite 4700
Denver, CO 80202-5647.

It is believed the errors were made by the United States Patent and Trademark Office and no fee is due. However, if any fees are deemed necessary, such fees may be charged to Deposit Account No. 04-1415.

Respectfully submitted,

Dated: August 31, 2009

Klifton L. Kime, Reg. No. 42,733
DORSEY & WHITNEY LLP
370 Seventeenth Street, Suite 4700
Denver, Colorado 80202-5647
Tel.: (303) 629-3400
Fax: (303) 629-3450

USPTO Customer No. 80705

SPE RESPONSE FOR CERTIFICATE OF CORRECTION

Paper No.: _____

DATE : 09-11-09

TO SPE OF : ART UNIT 3764

SUBJECT : Request for Certificate of Correction for Appl. No.: 11/065746 Patent No.: 7517303

Please respond to this request for a certificate of correction within 7 days.

FOR IFW FILES:

Please review the requested changes/corrections as shown in the **COCIN** document(s) in the IFW application image. No new matter should be introduced, nor should the scope or meaning of the claims be changed.

Please complete the response (see below) and forward the completed response to scanning using document code **COCX**.

FOR PAPER FILES:

Please review the requested changes/corrections as shown in the attached certificate of correction. Please complete this form (see below) and forward it with the file to:

Certificates of Correction Branch (CofC)
South Tower - 9A22
Palm Location 7580

A Green

Angela Green
Certificates of Correction Branch
703-756-1541

Thank You For Your Assistance

The request for issuing the above-identified correction(s) is hereby:
Note your decision on the appropriate box.

- ☒ **Approved** — All changes apply.
- ☐ **Approved in Part** — Specify below which changes **do not** apply.
- ☐ **Denied** — State the reasons for denial below.

Comments: Approved. AR Cow

LOAN H. THANH
SUPERVISORY PATENT EXAMINER

SPE

3764
Art Unit

PTOL-306 (REV. 7/03)

U.S. DEPARTMENT OF COMMERCE Patent and Trademark Office

PTO/SB/44 (09/07)
Approved for use through 08/31/2010. OMB 0651-0033
U.S. Patent and Trademark Office; U.S. DEPARTMENT OF COMMERCE
(Also Form PTO-1050)

Attorney Docket No. 34103/US/2

UNITED STATES PATENT AND TRADEMARK OFFICE

CERTIFICATE OF CORRECTION

PATENT NO.	:	7,517,303 B2
APPLICATION NO.	:	11/065,746
ISSUE DATE	:	February 25, 2005
INVENTOR(S)	:	Douglas A. Crawford et al.

It is certified that an error appears or errors appear in the above-identified patent and that said Letters Patent is hereby corrected as shown below:

Approved ARC

Title page, Related U.S. Application Data, Item (60), insert:

--This application claims the benefit of 60/548,787 02/26/2004
and claims benefit of 60/548,265 02/26/2004
and claims benefit of 60/548,786 02/26/2004
and claims benefit of 60/548,811 02/26/2004--.

Mailing address of Sender:

Dorsey & Whitney LLP
370 Seventeenth Street, Suite 4700
Denver, CO 80202-5647
Phone: (303) 629-3400
Fax: (303) 629-3450

USPTO Customer No.: 80705

Patent No 7,517,303 B2

4853-2138-8291\1

UNITED STATES PATENT AND TRADEMARK OFFICE

Commissioner for Patents
United States Patent and Trademark Office
P.O. Box 1450
Alexandria, VA 22313-1450
www.uspto.gov

FISH & RICHARDSON PC
P.O. BOX 1022
MINNEAPOLIS MN 55440-1022

COPY MAILED

SEP 16 2005

OFFICE OF PETITIONS

In re Application of :
Bader et al :
Application No. 11/065,769 : ON PETITION
Deposited: February 25, 2005 :
Attorney Docket No.: 12406-035US2/P2000,0068U :
Title: Radiation-Emitting Semiconductor Element and Method For Producing the Same :

This is a decision on the petition to accord a filing date submitted April 28, 2005 and supplemented on September 8, 2005 requesting that the above-identified application be accorded a filing date of February 25, 2005.

Application papers in the above-identified application were deposited on February 25, 2005. However, on April 19, 2005 the Office of Initial Patent Examination mailed a "Notice of Incomplete Nonprovisional Application", notifying applicant that the application papers had not been accorded a filing date because the application was deposited without drawings.[1]

In response, 9 sheets of drawings, including figures 1-7c and the present petition were filed on April 28, 2005. The petition contends that the application as filed contained 9 sheets of formal drawings and was described in the original filed specification. In support, the petition is accompanied by a copy of applicants' postcard receipt which acknowledges receipt in the office of " Drawings (formal, 9 sheets)" on February 22, 2005.

Applicant's postcard receipt is prima facie[2] evidence that the

---

[1]See 35 U.S.C. 111(a)(4)

[2]A postcard receipt which itemizes and properly identifies the items which are being filed serves as prima facie evidence of

drawing was received on February 25, 2005, but no drawings are present in the file. Hence, it is clear that the papers for this application were mishandled by the Office. Therefore, it is concluded that 9 sheets of drawings, including figures 1-7c were received on February 25, 2005, as shown in counsel's file, and later misplaced in the Office.

The petition is Granted. No petition fee has been charged and none is required.

Since the original drawings cannot be located in the Office, the copy of the drawings supplied on April 28, 2005, will be used for processing and examination purposes.

The application will then be returned to the Office of Initial Patent Examination for further processing with a **filing date of February 25, 2005**, using the 9 sheets of drawings supplied on September 8, 2005.

Telephone inquiries related to this decision may be directed to the undersigned at (571) 272-3215.

Charlema R. Grant
Petition Attorney
Office of Petitions

---

receipt in the office of all items listed thereon. See MPEP 503.

UNITED STATES PATENT AND TRADEMARK OFFICE

Commissioner for Patents
United States Patent and Trademark Office
P.O. Box 1450
Alexandria, VA 22313-1450
www.uspto.gov

DORSEY & WHITNEY, LLP
INTELLECTUAL PROPERTY DEPARTMENT
370 SEVENTEENTH STREET
SUITE 4700
DENVER CO 80202-5647

COPY MAILED

SEP 15 2008

In re Application of	:
Bradley J. Smith et al.	:
Application No. 11/065,770	: DECISION ON PETITION
Filed: February 25, 2005	: UNDER 37 CFR 1.78(a)(6)
Attorney Docket No. **34007/US/2**	:

This is a decision on the petition under 37 CFR 1.78(a)(6) filed June 3, 2008, to accept an unintentionally delayed claim under 35 U.S.C. §119(e) for the benefit of prior-filed provisional applications 60/451,104, 60/450,789 and 60/450,890, set forth in the concurrently filed amendment.

The petition is **DISMISSED.**

A petition under 37 CFR 1.78(a)(6) is only applicable to those applications filed on or after November 29, 2000. Further, the petition is appropriate only after expiration of the period specified in 37 CFR 1.78(a)(5)(ii) and must be filed during the pendency of the nonprovisional application. In addition, the petition must be accompanied by:

(1) the reference required by 35 U.S.C. § 119(e) and 37 CFR 1.78(a)(5)(i) to the prior-filed application, unless previously submitted;
(2) the surcharge set forth in § 1.17(t); and
(3) a statement that the entire delay between the date the claim was due under 37 CFR 1.78(a)(5)(ii) and the date the claim was filed was unintentional. The Director may require additional information where there is a question whether the delay was unintentional.

This nonprovisional application was pending at the time of filing of the reference to the prior-filed provisional applications as required b 37 CFR 1.78(a)(5)(ii). Additionally, the intermediate non-provisional applications, Application Nos. 10/789,162, 10/789,294 and 10/789,579 all filed February 26, 2004, were filed within twelve months of the filing date of the prior-filed provisional applications, Application nos. 60/451,104, 60/450,789 and 60/450,890 which were all filed February 28, 2003, for which priority is claimed.

However, the amendment is not acceptable as drafted since it improperly incorporates by reference the prior-filed provisional applications. An incorporation by reference statement added after an application's filing date is not effective because no new matter can be added to an application after its filing date (*see* 35 U.S.C. § 132(a)). If an incorporation by reference statement is included in an amendment to the specification to add a benefit claim under 35 U.S.C. § 119 after the filing date of the application, the amendment would not be proper. When a benefit claim under 35 U.S.C. § 119 is submitted after the filing of an application, the reference to the prior application cannot include an incorporation by reference statement of the prior application. *See* Dart Industries v. Banner, 636 F.2d 684, 207 USPQ 273 (C.A.D.C. 1980). *Note* MPEP §§ 201.06(c) and 608.04(b).

Before the petition under 37 CFR § 1.78(a)(6) can be granted, a renewed petition and either a Supplemental Application Data Sheet (signed in compliance with 37 CFR 1.33(b) or a substitute amendment (complying with the provisions of 37 CFR 1.121 and in compliance with 37 CFR 1.78(a)(5)(i)) to correct the above matters are required.

Further correspondence with respect to this matter should be addressed as follows:

By mail: Mail Stop PETITIONS
Commissioner for Patents
Post Office Box 1450
Alexandria, VA 22313-1450

By hand: Customer Service Window
Mail Stop Petitions
Randolph Building
401 Dulany Street
Alexandria, VA 22314

By fax: (571) 273-8300
ATTN: Office of Petitions

Any questions concerning this matter may be directed to Senior Petitions Attorney Patricia Faison-Ball at (571) 272-3212.

Anthony Knight
Supervisor
Office of Petitions

UNITED STATES PATENT AND TRADEMARK OFFICE

Commissioner for Patents
United States Patent and Trademark Office
P.O. Box 1450
Alexandria, VA 22313-1450
www.uspto.gov

DORSEY & WHITNEY, LLP
INTELLECTUAL PROPERTY DEPARTMENT
370 SEVENTEENTH STREET
SUITE 4700
DENVER CO 80202-5647

COPY MAILED
FEB 18 2010

In re Application of	:
Bradley J. Smith et al.	:
Application No. 11/065,770	: DECISION ON PETITION
Filed: February 25, 2005	: UNDER 37 CFR 1.78(a)(6)
Attorney Docket No. **34007/US/2**	:

This is a decision on the renewed petition under 37 CFR 1.78(a)(6) filed January 8, 2010, to accept an unintentionally delayed claim under 35 U.S.C. §119(e) for the benefit of prior-filed provisional applications 60/451,104, 60/450,789 and 60/450,890, set forth in the concurrently filed amendment.

The petition is **GRANTED.**

A petition under 37 CFR 1.78(a)(6) is only applicable to those applications filed on or after November 29, 2000. Further, the petition is appropriate only after expiration of the period specified in 37 CFR 1.78(a)(5)(ii) and must be filed during the pendency of the nonprovisional application. In addition, the petition must be accompanied by:

(1) the reference required by 35 U.S.C. § 119(e) and 37 CFR 1.78(a)(5)(i) to the prior-filed application, unless previously submitted;
(2) the surcharge set forth in § 1.17(t); and
(3) a statement that the entire delay between the date the claim was due under 37 CFR 1.78(a)(5)(ii) and the date the claim was filed was unintentional. The Director may require additional information where there is a question whether the delay was unintentional.

This nonprovisional application was pending at the time of filing of the reference to the prior-filed provisional applications as required b 37 CFR 1.78(a)(5)(ii). Additionally, the intermediate non-provisional applications, Application Nos. 10/789,162, 10/789,294 and 10/789,579 all filed February 26, 2004, were filed within twelve months of the filing date of the prior-filed provisional applications, Application nos. 60/451,104, 60/450,789 and 60/450,890 which were all filed February 28, 2003, for which priority is claimed.

All of the above requirements having been satisfied, the late claim for priority under 35 U.S.C. ***§119(e)*** is accepted as being unintentionally delayed.

The granting of the petition to accept the delayed benefit claim to the prior-filed applications under 37 CFR 1.78(a)(6) should not be construed as meaning that the instant application is entitled to the benefit of the filing date of the prior-filed applications. In order for the instant application to be entitled to the benefit of the prior-filed applications, all other requirements under 35 U.S.C. §119(e) and 37 CFR 1.78(a)(4) and (a)(5) must be met. Similarly, the fact that the corrected Filing Receipt accompanying this decision on petition includes the prior-filed applications should not be construed as meaning that applicant is entitled to the claim for benefit of priority to the prior-filed applications noted thereon. Accordingly, the examiner will, in due course, consider this benefit claim and determine whether the instant application is entitled to the benefit of the earlier filing date.

A corrected Filing Receipt, which includes the priority claim to the prior-filed provisional applications, accompanies this decision on petition.

Any inquiries concerning this decision may be directed to Senior Petitions Attorney Patricia Faison-Ball at (571) 272-3212. All other inquiries concerning either the examination procedures or status of the application should be directed to the Technology Center.

The application is being forwarded to Technology Center AU 3764 for consideration by the examiner of the claim under 35 U.S.C. §119(e) for the benefit of priority to the prior-filed provisional application.

Anthony Knight
Supervisor
Office of Petitions

ATTACHMENT: Corrected Filing Receipt

UNITED STATES PATENT AND TRADEMARK OFFICE

UNITED STATES DEPARTMENT OF COMMERCE
United States Patent and Trademark Office
Address: COMMISSIONER FOR PATENTS
P.O. Box 1450
Alexandria, Virginia 22313-1450
www.uspto.gov

APPLICATION NUMBER	FILING or 371(c) DATE	GRP ART UNIT	FIL FEE REC'D	ATTY.DOCKET.NO	TOT CLAIMS	IND CLAIMS
11/065,770	02/25/2005	3764	1934	34007/US/2	24	4

CONFIRMATION NO. 8550

CORRECTED FILING RECEIPT

OC000000040123728

20686
DORSEY & WHITNEY, LLP
INTELLECTUAL PROPERTY DEPARTMENT
370 SEVENTEENTH STREET
SUITE 4700
DENVER, CO 80202-5647

Date Mailed: 02/17/2010

Receipt is acknowledged of this non-provisional patent application. The application will be taken up for examination in due course. Applicant will be notified as to the results of the examination. Any correspondence concerning the application must include the following identification information: the U.S. APPLICATION NUMBER, FILING DATE, NAME OF APPLICANT, and TITLE OF INVENTION. Fees transmitted by check or draft are subject to collection. Please verify the accuracy of the data presented on this receipt. **If an error is noted on this Filing Receipt, please submit a written request for a Filing Receipt Correction. Please provide a copy of this Filing Receipt with the changes noted thereon. If you received a "Notice to File Missing Parts" for this application, please submit any corrections to this Filing Receipt with your reply to the Notice. When the USPTO processes the reply to the Notice, the USPTO will generate another Filing Receipt incorporating the requested corrections**

Applicant(s)

Bradley J. Smith, Tyler, TX;
Richard W. Trevino, Whitehouse, TX;
Douglas A. Crawford, Lafayette, CO;

Power of Attorney: None

Domestic Priority data as claimed by applicant

This appln claims benefit of 60/548,811 02/26/2004
and claims benefit of 60/548,786 02/26/2004
and claims benefit of 60/548,787 02/26/2004
and is a CIP of 10/789,182 02/26/2004 PAT 7,621,850
which claims benefit of 60/450,890 02/28/2003
and claims benefit of 60/450,789 02/28/2003
and claims benefit of 60/451,104 02/28/2003
This application 11/065,770
is a CIP of 10/789,294 02/26/2004 PAT 7,553,260
which claims benefit of 60/450,890 02/28/2003
and claims benefit of 60/450,789 02/28/2003
and claims benefit of 60/451,104 02/28/2003
This application 11/065,770
is a CIP of 10/789,579 02/26/2004 PAT 7,618,346
which claims benefit of 60/450,890 02/28/2003
and claims benefit of 60/450,789 02/28/2003
and claims benefit of 60/451,104 02/28/2003

Foreign Applications

If Required, Foreign Filing License Granted: 03/22/2005

The country code and number of your priority application, to be used for filing abroad under the Paris Convention, is **US 11/065,770**

Projected Publication Date: Not Applicable

Non-Publication Request: No

Early Publication Request: No
Title

DUAL TREADMILL EXERCISE DEVICE HAVING A SINGLE REAR ROLLER

Preliminary Class

482

PROTECTING YOUR INVENTION OUTSIDE THE UNITED STATES

Since the rights granted by a U.S. patent extend only throughout the territory of the United States and have no effect in a foreign country, an inventor who wishes patent protection in another country must apply for a patent in a specific country or in regional patent offices. Applicants may wish to consider the filing of an international application under the Patent Cooperation Treaty (PCT). An international (PCT) application generally has the same effect as a regular national patent application in each PCT-member country. The PCT process **simplifies** the filing of patent applications on the same invention in member countries, but **does not result** in a grant of "an international patent" and does not eliminate the need of applicants to file additional documents and fees in countries where patent protection is desired.

Almost every country has its own patent law, and a person desiring a patent in a particular country must make an application for patent in that country in accordance with its particular laws. Since the laws of many countries differ in various respects from the patent law of the United States, applicants are advised to seek guidance from specific foreign countries to ensure that patent rights are not lost prematurely.

Applicants also are advised that in the case of inventions made in the United States, the Director of the USPTO must issue a license before applicants can apply for a patent in a foreign country. The filing of a U.S. patent application serves as a request for a foreign filing license. The application's filing receipt contains further information and guidance as to the status of applicant's license for foreign filing.

Applicants may wish to consult the USPTO booklet, "General Information Concerning Patents" (specifically, the section entitled "Treaties and Foreign Patents") for more information on timeframes and deadlines for filing foreign patent applications. The guide is available either by contacting the USPTO Contact Center at 800-786-9199, or it can be viewed on the USPTO website at http://www.uspto.gov/web/offices/pac/doc/general/index.html.

For information on preventing theft of your intellectual property (patents, trademarks and copyrights), you may wish to consult the U.S. Government website, http://www.stopfakes.gov. Part of a Department of Commerce initiative, this website includes self-help "toolkits" giving innovators guidance on how to protect intellectual property in specific countries such as China, Korea and Mexico. For questions regarding patent enforcement issues, applicants may call the U.S. Government hotline at 1-866-999-HALT (1-866-999-4158).

LICENSE FOR FOREIGN FILING UNDER

Title 35, United States Code, Section 184

Title 37, Code of Federal Regulations, 5.11 & 5.15

GRANTED

The applicant has been granted a license under 35 U.S.C. 184, if the phrase "IF REQUIRED, FOREIGN FILING LICENSE GRANTED" followed by a date appears on this form. Such licenses are issued in all applications where the conditions for issuance of a license have been met, regardless of whether or not a license may be required as set forth in 37 CFR 5.15. The scope and limitations of this license are set forth in 37 CFR 5.15(a) unless an earlier license has been issued under 37 CFR 5.15(b). The license is subject to revocation upon written notification. The date indicated is the effective date of the license, unless an earlier license of similar scope has been granted under 37 CFR 5.13 or 5.14.

This license is to be retained by the licensee and may be used at any time on or after the effective date thereof unless it is revoked. This license is automatically transferred to any related applications(s) filed under 37 CFR 1.53(d). This license is not retroactive.

The grant of a license does not in any way lessen the responsibility of a licensee for the security of the subject matter as imposed by any Government contract or the provisions of existing laws relating to espionage and the national security or the export of technical data. Licensees should apprise themselves of current regulations especially with respect to certain countries, of other agencies, particularly the Office of Defense Trade Controls, Department of State (with respect to Arms, Munitions and Implements of War (22 CFR 121-128)); the Bureau of Industry and Security, Department of Commerce (15 CFR parts 730-774); the Office of Foreign AssetsControl, Department of Treasury (31 CFR Parts 500+) and the Department of Energy.

NOT GRANTED

No license under 35 U.S.C. 184 has been granted at this time, if the phrase "IF REQUIRED, FOREIGN FILING LICENSE GRANTED" DOES NOT appear on this form. Applicant may still petition for a license under 37 CFR 5.12, if a license is desired before the expiration of 6 months from the filing date of the application. If 6 months has lapsed from the filing date of this application and the licensee has not received any indication of a secrecy order under 35 U.S.C. 181, the licensee may foreign file the application pursuant to 37 CFR 5.15(b).

UNITED STATES PATENT AND TRADEMARK OFFICE

Commissioner for Patents
United States Patent and Trademark Office
P.O. Box 1450
Alexandria, VA 22313-1450
www.uspto.gov

COPY MAILED

MAR 0 6 2008

OFFICE OF PETITIONS

KLARQUIST SPARKMAN, LLP
121 SW SALMON STREET
SUITE 1600
PORTLAND OR 97204

In re Application of	:	
Joseph H. Hoffman et al	:	
Application No. 11/065,772	:	DECISION GRANTING PETITION
Filed: February 24, 2005	:	UNDER 37 CFR 1.313(c)(2)
Attorney Docket No. 7180-69626-09	:	

This is a decision on the petition under 37 CFR 1.313(c)(2), filed March 5, 2008, to withdraw the above-identified application from issue after payment of the issue fee.

The petition is **GRANTED**.

The above-identified application is withdrawn from issue for consideration of a submission under 37 CFR 1.114 (request for continued examination). *See* 37 CFR 1.313(c)(2).

Petitioner is advised that the issue fee paid on January 14, 2008 cannot be refunded. If, however, this application is again allowed, petitioner may request that it be applied towards the issue fee required by the new Notice of Allowance.[1]

Telephone inquiries should be directed to the undersigned at (571) 272-3208.

This application is being referred to Technology Center AU 3711 for processing of the request for continued examination under 37 CFR 1.114 and for consideration of the concurrently filed IDS.

Karen Creasy

Karen Creasy
Petitions Examiner
Office of Petitions

---

[1] *The request to apply the issue fee to the new Notice may be satisfied by completing and returning the new Part B – Fee(s) Transmittal Form (along with any balance due at the time of submission). Petitioner is advised that the Issue Fee Transmittal Form must be completed and timely submitted to avoid abandonment of the application.*

UNITED STATES PATENT AND TRADEMARK OFFICE

APR 27 2007

Commissioner for Patents
United States Patent and Trademark Office
P.O. Box 1450
Alexandria, VA 22313-1450
www.uspto.gov

JONDLE & ASSOCIATES P.C.
858 HAPPY CANYON ROAD SUITE 230
CASTLE ROCK CO 80108

In re Application of William H. Eby Serial No.: 11/065,801 Filed: February 25, 2005 Attorney Docket No.: 1421-188	: PETITION DECISION

This is in response to the petition under 37 CFR § 1.59(b), filed April 9, 2007, to expunge information from the above identified application. This application has not been allowed.

Petitioner requests that the Reply to Request for Information Under 37 CFR 1.105, and attachment thereto, submitted to the Patent Office on April 9, 2007, be expunged from the record. Petitioner states either: (A) that the information contains trade secret material, proprietary material and/or material that is subject to a protective order which has not been made public; or (B) that the information submitted was unintentionally submitted and the failure to obtain its return would cause irreparable harm to the party who submitted the information or to the party in interest on whose behalf the information was submitted, and the information has not otherwise been made public. The petition fee set forth in 37 CFR § 1.17(g) has been paid.

This is an examined application which is currently under non-final rejection. As such the information provided has been reviewed, in part, but proceedings in the application have not been terminated. As stated in M.P.E.P. 724, upon allowance or other action closing prosecution in an application, petition may be made for return of Proprietary information. The information cannot be expunged at this time.

The petition is **DISMISSED**. Applicant may resubmit the petition subsequent to a Notice of Allowability or *ex parte Quayle* action being mailed in the application. No additional petition fee will be required at that time.

Should there be any questions about this decision please contact Marianne C. Seidel by letter addressed to Director, TC 1600, at the address listed above, or by telephone at 571-272-0584 or by facsimile sent to the general Office facsimile number, 703-872-9306.

Marianne C. Seidel
Quality Assurance Specialist/Program Examiner
Technology Center 1600

UNITED STATES PATENT AND TRADEMARK OFFICE

Commissioner for Patents
United States Patent and Trademark Office
P.O. Box 1450
Alexandria, VA 22313-1450
www.uspto.gov

JONDLE & ASSOCIATES P.C.
858 HAPPY CANYON ROAD SUITE 230
CASTLE ROCK CO 80108

OCT 17 2007

In re Application of	:
William H. Eby	:
Serial No.: 11/065,801	: PETITION DECISION
Filed: February 25, 2005	:
Attorney Docket No.: 1421-188	:

This is in response to the petition under 37 CFR § 1.59(b), filed September 26, 2007, to expunge information from the above identified application. This application has now been allowed.

Petitioner requests that the Reply to Request for Information Under 37 CFR 1.105, and all attachments thereto, submitted to the Patent Office on April 9, 2007, be expunged from the record. Petitioner states either: (A) that the information contains trade secret material, proprietary material and/or material that is subject to a protective order which has not been made public; or (B) that the information submitted was unintentionally submitted and the failure to obtain its return would cause irreparable harm to the party who submitted the information or to the party in interest on whose behalf the information was submitted, and the information has not otherwise been made public. The petition fee set forth in 37 CFR § 1.17(g) has been paid.

The reasons set forth in this petition establishes to the satisfaction of the Director that expungement of the information is appropriate. The file entries for those documents have been closed and as such the documents are no longer publicly available, which is the IFW equivalent to removal of a paper document from a paper file wrapper. Also, as stated in M.P.E.P. 724, upon allowance or other action closing prosecution in an application, petition may be made for return of Proprietary information. As this application has been allowed, the information is being returned to applicant.

Therefore, applicant's petition is GRANTED.

Should there be any questions about this decision please contact Marianne C. Seidel by letter addressed to Director, TC 1600, at the address listed above, or by telephone at 571-272-0584 or by facsimile sent to the general Office facsimile number, 703-872-9306.

Marianne C. Seidel
Quality Assurance Specialist/Program Manager
Technology Center 1600

UNITED STATES PATENT AND TRADEMARK OFFICE

Commissioner for Patents
United States Patent and Trademark Office
P.O. Box 1450
Alexandria, VA 22313-1450
www.uspto.gov

JONDLE & ASSOCIATES P.C.
858 HAPPY CANYON ROAD SUITE 230
CASTLE ROCK CO 80108

OCT 17 2007

In re Application of	:
William H. Eby	:
Serial No.: 11/065,805	: PETITION DECISION
Filed: February 25, 2005	:
Attorney Docket No.: 1421-189	:

This is in response to the petition under 37 CFR § 1.59(b), filed September 20, 2007, to expunge information from the above identified application. This application has now been allowed.

Petitioner requests that the Reply to Request for Information Under 37 CFR 1.105, and all attachments thereto, submitted to the Patent Office on June 14, 2007, be expunged from the record. Petitioner states either: (A) that the information contains trade secret material, proprietary material and/or material that is subject to a protective order which has not been made public; or (B) that the information submitted was unintentionally submitted and the failure to obtain its return would cause irreparable harm to the party who submitted the information or to the party in interest on whose behalf the information was submitted, and the information has not otherwise been made public. The petition fee set forth in 37 CFR § 1.17(g) has been paid.

The reasons set forth in this petition establishes to the satisfaction of the Director that expungement of the information is appropriate. The file entries for those documents have been closed and as such the documents are no longer publicly available, which is the IFW equivalent to removal of a paper document from a paper file wrapper. Also, as stated in M.P.E.P. 724, upon allowance or other action closing prosecution in an application, petition may be made for return of Proprietary information. As this application has been allowed, the information is being returned to applicant.

Therefore, applicant's petition is GRANTED.

Should there be any questions about this decision please contact Marianne C. Seidel by letter addressed to Director, TC 1600, at the address listed above, or by telephone at 571-272-0584 or by facsimile sent to the general Office facsimile number, 703-872-9306.

Marianne C. Seidel
Quality Assurance Specialist/Program Manager
Technology Center 1600

UNITED STATES PATENT AND TRADEMARK OFFICE

Commissioner for Patents
United States Patent and Trademark Office
P.O. Box 1450
Alexandria, VA 22313-1450
www.uspto.gov

IBM CORP (YA)
C/O YEE & ASSOCIATES PC
P.O. BOX 802333
DALLAS, TX 75380

COPY MAILED

NOV 04 2008

OFFICE OF PETITIONS

In re Application of
Richard Louis Arndt, et al.
Application No. 11/065,830
Filed: February 25, 2005
Attorney Docket No: AUS920040554US1

ON PETITION

This is a decision on the petition, filed July 24, 2008, to revive the above-identified application under the unintentional provisions of 37 CFR 1.137(b).

The petition is **GRANTED**.

This application became abandoned for failure to timely pay the issue and publication fees on or before May 5, 2008. A Notice of Abandonment was mailed on June 23, 2008. On July 24, 2008, the present petition was filed.

The petition satisfies the requirements of 37 CFR 1.137(b) in that petitioner has supplied (1) the reply in the form of payment of the issue fee of $1,440 and the publication fee of $300, (2) the petition fee of $1,540; and (3) an adequate statement of unintentional delay.

The application is being referred to the Office of Data Management to be processed into a patent.

Telephone inquires related to this decision should be directed to the undersigned at (571) 272-3204. Telephone inquiries related to processing as a patent should be directed to (571) 272-4200.

Sherry D. Brinkley
Petitions Examiner
Office of Petitions

UNITED STATES PATENT AND TRADEMARK OFFICE

UNITED STATES DEPARTMENT OF COMMERCE
United States Patent and Trademark Office
Address: COMMISSIONER FOR PATENTS
P.O. Box 1450
Alexandria, Virginia 22313-1450
www.uspto.gov

DIEHL SERVILLA LLC
77 BRANT AVE
SUITE 210
CLARK, NJ 07066

Mail Date: 04/20/2010

Applicant	: Peter Lablans	: DECISION ON REQUEST FOR
Patent Number	: 7580472	: RECALCULATION of PATENT
Issue Date	: 08/25/2009	: TERM ADJUSTMENT IN VIEW
Appliction No	: 11/065,836	: OF WYETH AND NOTICE OF INTENT TO
Filed	: 02/25/2005	: ISSUE CERTIFICATE OF CORRECTION
		:

The Request for Recalculation is **GRANTED** to the extent indicated.

The patent term adjustment has been determined to be **1218** days. The USPTO will *sua sponte* issue a certificate of correction reflecting the amount of PTA days determined by the recalculation.

Prior to the issuance of the certificate of correction, the USPTO will afford patentee an opportunity to be heard and request reconsideration. Accordingly, patentee has **one month or thirty (30) days**, whichever is longer, to file a request for reconsideration of this patent term adjustment calculation. See 35 U.S.C. 154(b)(3)(B)(ii) and 37 CFR 1.322(a)(4). No extensions of time will be granted under 37 CFR 1.136.

Patentee should use document code PET.OP if electronically filing a request for reconsideration of this patent term adjustment calculation. The patentee must also include the information required by 37 CFR 1.705(b)(2) and the fee required by 37 CFR 1.18(e). If patentee does not file a timely request for reconsideration of this patent term adjustment calculation including the information required by 37 CFR 1.705(b)(2) and the fee required by 37 CFR 1.18(e), the USPTO will issue a certificate of correction reflecting the PTA determination noted above.

Patentee should be aware that in order to preserve the right to review in the United States District Court for the District of Columbia of the USPTO patent term adjustment determination, patentee must ensure that he or she also take the steps required under 35 U.S.C. 154(b)(4)(A) in a timely manner. Nothing in the request for recalculation should be construed as providing an alternative time frame for commencing a civil action under 35 U.S.C. 154(b)(4)(A).

Any questions concerning this decision should be directed to the Office of Patent Legal Administration at 571-272-7702.

UNITED STATES PATENT AND TRADEMARK OFFICE

Commissioner for Patents
United States Patent and Trademark Office
P.O. Box 1450
Alexandria, VA 22313-1450
www.uspto.gov

SCHWEGMAN, LUNDBERG & WOESSNER, P.A.
P.O. BOX 2938
MINNEAPOLIS MN 55402

MAILED

APR 27 2009

OFFICE OF PETITIONS

In re Application of	:	
Zeeshan Naseh et al	:	
Application No. 11/065,871	:	DECISION GRANTING PETITION
Filed: February 25, 2005	:	UNDER 37 CFR 1.313(c)(2)
Attorney Docket No. 1370.278US1	:	

This is a decision on the petition under 37 CFR 1.313(c)(2), filed April 24, 2009, to withdraw the above-identified application from issue after payment of the issue fee.

The petition is **GRANTED**.

The above-identified application is withdrawn from issue for consideration of a submission under 37 CFR 1.114 (request for continued examination). *See* 37 CFR 1.313(c)(2).

Petitioner is advised that the issue fee paid on March 13, 2009 cannot be refunded. If, however, this application is again allowed, petitioner may request that it be applied towards the issue fee required by the new Notice of Allowance.[1]

Telephone inquiries should be directed to the undersigned at (571) 272-3208.

This application is being referred to Technology Center AU 2419 for processing of the request for continued examination under 37 CFR 1.114 and for consideration of the concurrently filed IDS and amendment.

/Karen Creasy/
Karen Creasy
Petitions Examiner
Office of Petitions

---

[1] *The request to apply the issue fee to the new Notice may be satisfied by completing and returning the new Part B – Fee(s) Transmittal Form (along with any balance due at the time of submission). Petitioner is advised that the Issue Fee Transmittal Form* ***must*** *be completed and timely submitted to avoid abandonment of the application.*

UNITED STATES PATENT AND TRADEMARK OFFICE

UNITED STATES DEPARTMENT OF COMMERCE
United States Patent and Trademark Office
Address: COMMISSIONER FOR PATENTS
P.O. Box 1450
Alexandria, Virginia 22313-1450
www.uspto.gov

JENKINS, WILSON, TAYLOR & HUNT, P. A.
Suite 1200 UNIVERSITY TOWER
3100 TOWER BLVD.,
DURHAM, NC 27707

Mail Date: 04/21/2010

Applicant	: Richard Henry Sternagle	: DECISION ON REQUEST FOR
Patent Number	: 7631093	: RECALCULATION of PATENT
Issue Date	: 12/08/2009	: TERM ADJUSTMENT IN VIEW
Appliction No	: 11/065,876	: OF WYETH AND NOTICE OF INTENT TO
Filed	: 02/25/2005	: ISSUE CERTIFICATE OF CORRECTION
		:

The Request for Recalculation is **GRANTED** to the extent indicated.

The patent term adjustment has been determined to be **0** days. The USPTO will *sua sponte* issue a certificate of correction reflecting the amount of PTA days determined by the recalculation.

Prior to the issuance of the certificate of correction, the USPTO will afford patentee an opportunity to be heard and request reconsideration. Accordingly, patentee has **one month or thirty (30) days**, whichever is longer, to file a request for reconsideration of this patent term adjustment calculation. See 35 U.S.C. 154(b)(3)(B)(ii) and 37 CFR 1.322(a)(4). No extensions of time will be granted under 37 CFR 1.136.

Patentee should use document code PET.OP if electronically filing a request for reconsideration of this patent term adjustment calculation. The patentee must also include the information required by 37 CFR 1.705(b)(2) and the fee required by 37 CFR 1.18(e). If patentee does not file a timely request for reconsideration of this patent term adjustment calculation including the information required by 37 CFR 1.705(b)(2) and the fee required by 37 CFR 1.18(e), the USPTO will issue a certificate of correction reflecting the PTA determination noted above.

Patentee should be aware that in order to preserve the right to review in the United States District Court for the District of Columbia of the USPTO patent term adjustment determination, patentee must ensure that he or she also take the steps required under 35 U.S.C. 154(b)(4)(A) in a timely manner. Nothing in the request for recalculation should be construed as providing an alternative time frame for commencing a civil action under 35 U.S.C. 154(b)(4)(A).

Any questions concerning this decision should be directed to the Office of Patent Legal Administration at 571-272-7702.

UNITED STATES PATENT AND TRADEMARK OFFICE

AUG - 3 2007

Commissioner for Patents
United States Patent and Trademark Office
P.O. Box 1450
Alexandria, VA 22313-1450
www.uspto.gov

JONDLE & ASSOCIATES P.C.
858 HAPPY CANYON ROAD SUITE 230
CASTLE ROCK CO 80108

In re Application of :	:
William H. Eby	:
Serial No.: 11/065,902	: PETITION DECISION
Filed: February 25, 2005	:
Attorney Docket No.: 1421-191	

This is in response to the petition under 37 CFR § 1.59(b), filed July 19, 2007, to expunge information from the above identified application. This application has not been allowed.

Petitioner requests that the Reply to Request for Information Under 37 CFR 1.105, and attachment thereto, submitted to the Patent Office on July 19, 2007, be expunged from the record. Petitioner states either: (A) that the information contains trade secret material, proprietary material and/or material that is subject to a protective order which has not been made public; or (B) that the information submitted was unintentionally submitted and the failure to obtain its return would cause irreparable harm to the party who submitted the information or to the party in interest on whose behalf the information was submitted, and the information has not otherwise been made public. The petition fee set forth in 37 CFR § 1.17(g) has been paid.

This is an examined application which is currently under non-final rejection. As such the information provided has been reviewed, in part, but proceedings in the application have not been terminated. As stated in M.P.E.P. 724, upon allowance or other action closing prosecution in an application, petition may be made for return of Proprietary information. The information cannot be expunged at this time.

The petition is **DISMISSED**. Applicants may resubmit the petition subsequent to a Notice of Allowability or *ex parte Quayle* action being mailed in the application. No additional petition fee will be required at that time.

Should there be any questions about this decision please contact Marianne C. Seidel by letter addressed to Director, TC 1600, at the address listed above, or by telephone at 571-272-0584 or by facsimile sent to the general Office facsimile number, 703-872-9306.

Marianne C. Seidel
Quality Assurance Specialist/Program Examiner
Technology Center 1600

UNITED STATES PATENT AND TRADEMARK OFFICE

Commissioner for Patents
United States Patent and Trademark Office
P.O. Box 1450
Alexandria, VA 22313-1450
www.uspto.gov

JAN 30 2008

JONDLE & ASSOCIATES P.C.
858 HAPPY CANYON ROAD SUITE 230
CASTLE ROCK CO 80108

In re Application of
William H. Eby
Serial No.: 11/065,902
Filed: February 28, 2005
Attorney Docket No.: 1421-191

: PETITION DECISION

This is in response to the renewed petition under 37 CFR § 1.59(b), filed January 18, 2008, to expunge information from the above identified application. This application has been allowed.

Petitioner requests that the Reply to Request for Information Under 37 CFR 1.105, and all attachments thereto, submitted to the Patent Office on July 19, 2007 be expunged from the record. Petitioner states either: (A) that the information contains trade secret material, proprietary material and/or material that is subject to a protective order which has not been made public; or (B) that the information submitted was unintentionally submitted and the failure to obtain its return would cause irreparable harm to the party who submitted the information or to the party in interest on whose behalf the information was submitted, and the information has not otherwise been made public. The petition fee set forth in 37 CFR § 1.17(g) has been paid.

The reasons set forth in this petition establishes to the satisfaction of the Director that expungement of the information is appropriate. The file entries for those documents have been closed and as such the documents are no longer publicly available, which is the IFW equivalent to removal of a paper document from a paper file wrapper. Also, as stated in M.P.E.P. 724, upon allowance or other action closing prosecution in an application, petition may be made for return of Proprietary information. As this application has been allowed, the information is being returned to applicant.

Therefore, applicant's petition is GRANTED.

Should there be any questions about this decision please contact Marianne C. Seidel by letter addressed to Director, TC 1600, at the address listed above, or by telephone at 571-272-0584 or by facsimile sent to the general Office facsimile number, 703-872-9306.

Marianne C. Seidel
Quality Assurance Specialist/Program Manager
Technology Center 1600

UNITED STATES PATENT AND TRADEMARK OFFICE

Commissioner for Patents
United States Patent and Trademark Office
P.O. Box 1450
Alexandria, VA 22313-1450
www.uspto.gov

Much Shelist Freed Denenberg Ament & Rubenstein, PC
191 N. Wacker Drive, Suite 1800
Chicago, Illinois 60606

MAILED

SEP 08 2005

Director's Office
Group 3700

In re Application of
Johannes Hendrikus Mink, et al.
Serial No. 11/065,915
Filed: February 25, 2005

DECISION ON PETITION TO MAKE SPECIAL

For: FLUID AND HAIR-DYE DISPENSERS

Applicant's petition, filed May 23, 2005, seeks to have this application made special pursuant to the Accelerated Examination Program. The petition is GRANTED.

The petition has been reviewed and is found to be in compliance with the requirements for special status as set forth in Section 708.02(VIII) of the Manual of Patent Examining Procedures (MPEP).

Applicant is advised that the examiner's search will be restricted to the subject matter encompassed by the claims. In the event that the application receives a first action rejection, applicant is encouraged to arrange for an interview with the examiner, and to provide the examiner with a working copy of any proposed amendment one working day prior to the interview. Any amendment filed in response to a first action rejection, which would require broadening of the field of search will be treated as an improper response.

PETITION GRANTED.

Richard A. Bertsch

Richard A. Bertsch, Director
Technology Center 3700
571-272-3750

rt/ 9/7/05

SPE RESPONSE FOR CERTIFICATE OF CORRECTION

Paper No.: _____

DATE 5-27-2010

TO SPE OF : ART UNIT _____

SUBJECT : Request for Certificate of Correction for Appl. No.: 11065929 Patent No.: 7211503

Please respond to this request for a certificate of correction within 7 days.

FOR IFW FILES:

Please review the requested changes/corrections as shown in the **COCIN** document(s) in the IFW application image. No new matter should be introduced, nor should the scope or meaning of the claims be changed.

Please complete the response (see below) and forward the completed response to scanning using document code **COCX**.

FOR PAPER FILES:

Please review the requested changes/corrections as shown in the attached certificate of correction. Please complete this form (see below) and forward it with the file to:

Certificates of Correction Branch (CofC)
Randolph Square – 9D10-A
Palm Location 7580

Eva James
Certificates of Correction Branch
703-756-1583

Thank You For Your Assistance

The request for issuing the above-identified correction(s) is hereby:
Note your decision on the appropriate box.

- ☒ **Approved** — **All** changes apply.
- ☐ **Approved in Part** — Specify below which changes **do not** apply.
- ☐ **Denied** — State the reasons for denial below.

Comments: _____

K Bryant
SPE

2891
Art Unit

UNITED STATES PATENT AND TRADEMARK OFFICE

Commissioner for Patents
United States Patent and Trademark Office
P.O. Box 1450
Alexandria, VA 22313-1450
www.uspto.gov

BARRY DOVE PATENT SERVICES, INC.
324 RAINTREE DRIVE
COPPELL TX 75019

COPY MAILED

MAR 3 1 2008

OFFICE OF PETITIONS

In re Application of	:	
Alton B. Hamm	:	
Application No. 11/065,942	:	DECISION ON PETITION
Filed: February 25, 2005	:	TO WITHDRAW
Attorney Docket No. ABH-002	:	FROM RECORD
	:	

This is a decision on the Request to Withdraw as attorney or agent of record under 37 C.F.R. § 1.36(b), filed April 13, 2007.

The request is **NOT APPROVED**.

A grantable request to withdraw as attorney/agent of record must be signed by every attorney/agent seeking to withdraw or contain a clear indication that one attorney is signing on behalf of another/others. A request to withdraw will not be approved unless at least 30 (thirty) days would remain between the date of approval and the later of the expiration date of a time to file a response or the expiration date of the maximum time period which can be extended under 37 C.F.R. § 1.136(a).

The Office cannot approve the request at this time since the reasons provided do not meet any of the conditions under the mandatory or permissive categories enumerated in 37 CFR 10.40. Section 10.40 of Title 37 of the Code of Federal Regulation states, "[a] practitioner shall not withdraw from employment in a proceeding before the Office without permission from the Office[.]" More specifically, 37 CFR 10.40 states, "[i]f paragraph (b) of this section is not applicable, a practitioner may not request permission to withdraw in matter pending before the Office unless such request or such withdrawal is" for one the permissive reasons listed in 37 CFR 10.40(c). The reasons set forth in the request, ***Barry Dove now works as an in-house counsel for STMicroelectronics. Barry Dove has given this client more than three months to obtain new counsel and several reminders*** , do not meet any the conditions set forth in 37 CFR 10.40.

All future communications from the Office will continue to be directed to the above-listed address until otherwise notified by applicant.

Telephone inquiries concerning this decision should be directed to Terri Williams at 571-272- 2991.

T. Williams

Terri Williams
Petitions Examiner
Office of Petitions

cc: **ALTON B. HAMM**
6201 RIVIERA DRIVE
NORTH RICHALAND HILLS, TX 76180

UNITED STATES PATENT AND TRADEMARK OFFICE

Commissioner for Patents
United States Patent and Trademark Office
P.O. Box 1450
Alexandria, VA 22313-1450
www.uspto.gov

MAILED
FROM DIRECTORS OFFICE

JAN 12 2006

TECHNOLOGY CENTER 3600

TAYLOR & AUST, P.C.
142 SOUTH MAIN STREET
P.O. BOX 560
AVILLA, IN 46710

In re application of	:	**DECISION ON PETITION**
John W. Nottingham et al.	:	**TO MAKE SPECIAL**
Application No. 11/065,963	:	**(INFRINGEMENT)**
Filed: February 25, 2005	:	
For: RECEIVER COLLAR	:	

This is a decision on the petition under 37 C.F.R § 1.102(d) filed November 14, 2005 to make the above-identified application special.

The petition requests that the above-identified application be made special under the procedure set forth in M.P.E.P. § 708.02, item II: Infringement.

MPEP 708.02 states that a Petition to Make Special based on Infringement must have the following: (1) the appropriate petition fee under 37 CFR 1.17(i); (2) a statement by the assignee, applicant, or attorney alleging: (A) that there is an infringing device or product actually on the market or method in use; (B) that a rigid comparison of the alleged infringing device, product or method with the claims of the application has been made, and that, in his or her opinion, some of the claims are unquestionably infringed; and (C) that he or she has made a careful and thorough search of the prior art, or has good knowledge of the prior art, and has sent a copy of the references deemed most closely related to the subject matter encompassed by the claims.

The petition filed November 14, 2005 meets all of the requirements above and, therefore, the petition is **GRANTED**.

The examiner is directed (1) to make an interference search for possible interfering applications; (2) to promptly examine this application out of turn; and (3) if any interfering application is discovered, to examine such application simultaneously and state in the first official letter of such application that it is being taken out of turn because of a possible interference.

Petitioner is advised that this application will continue to be special, throughout its entire prosecution and pendency, including interference and appeal, if any, only if petitioner makes a prompt *bona fide* effort, in response to each Office action, to place the application in condition for allowance, even if it is necessary to conduct an interview with the examiner to accomplish this purpose.

Randolph A. Reese

Randolph A. Reese
Special Programs Examiner
Technology Center 3600
571-272-6619

RAR/dew: 11/23/05

UNITED STATES PATENT AND TRADEMARK OFFICE

Commissioner for Patents
United States Patent and Trademark Office
P.O. Box 1450
Alexandria, VA 22313-1450
www.uspto.gov

PITTS AND BRITTIAN P C
P O BOX 51295
KNOXVILLE TN 37950-1295

COPY MAILED

JUL 08 2008

OFFICE OF PETITIONS

In re Application of :
John W. **NOTTINGHAM** :
Application No. 11/065,963 :
Filed: February 25, 2005 :
Attorney Docket No. 33056.00 :

ON PETITION

This is a decision on the petition, filed March 20, 2008, under 37 CFR 1.137(b) to revive the above-identified application.

The petition is **DISMISSED**.

Any request for reconsideration of this decision must be submitted within TWO (2) MONTHS from the mail date of this decision. Extensions of time under 37 CFR 1.136(a) are permitted. The reconsideration request should include a cover letter entitled "Renewed Petition under 37 CFR 1.137(b)." This is **not** a final agency action within the meaning of 5 U.S.C. § 704.

The application became abandoned for failure to reply in a timely manner to the non-final Office action mailed, March 28, 2007, which set a shortened statutory period for reply of three (3) months. No extensions of time under the provisions of 37 CFR 1.136(a) was obtained. Accordingly, the application became abandoned on June 29, 2008.

A grantable petition under 37 CFR 1.137(b) must be accompanied by: (1) the required reply, unless previously filed; (2) the petition fee as set forth in 37 CFR 1.17(m); (3) a statement that the entire delay in filing the required reply from the due date for the reply until the filing of a grantable petition pursuant to 37 CFR 1.137(b) was unintentional; and (4) any terminal disclaimer (and fee as set forth in 37 CFR 1.20(d)) required by 37 CFR 1.137(d). Where there is a question as to whether either the abandonment or the delay in filing a petition under 37 CFR 1.137 was unintentional, the Director may require additional information. See MPEP 711.03(c)(II)(C) and (D). The instant petition lacks item(s) (3).

The statement of delay is not acceptable. In this regard, petitioner's attention is directed to 37 CFR 1.33(b), which states.

> (b) Amendments and other papers. Amendments and other papers, except for written assertions pursuant to § 1.27(c)(2)(ii) of this part, filed in the application must be signed by:
> (1) A registered patent attorney or patent agent of record appointed in compliance with § 1.32(b);
> (2) A registered patent attorney or patent agent not of record who acts in a representative capacity under the provisions of § 1.34;
> (3) An assignee as provided for under §3.71(b) of this chapter; or
> (4) All of the applicants (§ 1.41(b)) for patent, unless there is an assignee of the entire interest and such assignee has taken action in the application in accordance with § 3.71 of this chapter.

An unsigned amendment (or other paper) or one not properly signed by a person having authority to prosecute the application is not entered. This applies, for instance, where the amendment (or other paper) is signed by only one of two applicants and the one signing has not been given a power of attorney by the other applicant.

Therefore, as the petition is not signed by all the inventors and the record herein fails to disclose that petitioner herein (Christopher Mainini) was ever given a power of attorney to act on behalf of inventor John Nottingham et al, or that he is an assignee of the entire interest and has complied with the provisions of 37 CFR 3.73(b), the petition is considered to not contain a proper statement of unintentional delay.

Further correspondence with respect to this matter should be addressed as follows:

By Mail: Mail Stop PETITION
Commissioner for Patents
P. O. Box 1450
Alexandria, VA 22313-1450

By hand: U. S. Patent and Trademark Office
Customer Service Window, Mail Stop Petitions
Randolph Building
401 Dulany Street
Alexandria, VA 22314

The centralized facsimile number is **(571) 273-8300.**

Telephone inquiries concerning this decision should be directed to Lori Baker Amerson at (571) 272-6052 or in her absence the undersigned at (571) 272-7099.

David Bucci
Petitions Examiner
Office of Petitions

UNITED STATES PATENT AND TRADEMARK OFFICE

Commissioner for Patents
United States Patent and Trademark Office
P.O. Box 1450
Alexandria, VA 22313-1450
www.uspto.gov

Pitts and Brittian, PC
PO Box 51295
Knoxville, TN 37950-1295

COPY MAILED

OCT 16 2008

OFFICE OF PETITIONS

In re Application of	:	
John Nottingham et al.	:	
Application No. 11/065,963	:	DECISION ON PETITION
Filed: February 25, 2005	:	
Attorney Docket No. 33056.00	:	

This is a decision on the petition under 37 CFR 1.137(b), filed August 20, 2008, to revive the above-identified application.

The petition is **DISMISSED**.

Any request for reconsideration of this decision must be submitted within TWO (2) MONTHS from the mail date of this decision. Extensions of time under 37 CFR 1.136(a) are permitted. The reconsideration request should include a cover letter entitled "Renewed Petition under 37 CFR 1.137(b)." This is **not** a final agency action within the meaning of 5 U.S.C. § 704.

The application became abandoned for failure to timely file a reply within the meaning of 37 CFR 1.113 to the non-final Office action of March 28, 2007. No extension of time under the provisions of 37 CFR 1.136(a) was obtained. Accordingly, the date of abandonment of this application is June 29, 2008.

A grantable petition under 37 CFR 1.137(b) must be accompanied by: (1) the required reply, unless previously filed; (2) the petition fee as set forth in 37 CFR 1.17(m); (3) a statement that the entire delay in filing the required reply from the due date for the reply until the filing of a grantable petition pursuant to 37 CFR 1.137(b) was unintentional; and (4) any terminal disclaimer (and fee as set forth in 37 CFR 1.20(d)) required by 37 CFR 1.137(c). Where there is a question as to whether either the abandonment or the delay in filing a petition under 37 CFR 1.137 was unintentional, the Commissioner may require additional information. *See* MPEP 711.03(c)(II)(C) and (D). The instant petition lacks item (3) above.

The statement of unintentional delay is not considered at this time to be a properly submitted statement. In this regard, the petition containing the statement of unintentional delay is signed by Randal Boyd. It is further noted that, in a paper filed with the petition, Mr. Boyd is also

stated to be the CEO of Radio Systems Corporation. Petitioner's attention is directed to 37 CFR 1.33(b), which states.

> *Amendments and other papers.* Amendments and other papers, except for written assertions pursuant to § 1.27(c)(2)(ii) of this part, filed in the application must be signed by:
> (1) A registered patent attorney or patent agent of record appointed in compliance with § 1.32(b);
> (2) A registered patent attorney or patent agent not of record who acts in a representative capacity under the provisions of § 1.34;
> (3) An assignee as provided for under § 3.71(b) of this chapter; or
> (4) All of the applicants (§ 1.41(b)) for patent, unless there is an assignee of the entire interest and such assignee has taken action in the application in accordance with § 3.71 of this chapter.

An unsigned amendment (or other paper) or one not properly signed by a person having authority to prosecute the application is not entered. This applies, for instance, where the amendment (or other paper) is signed by only one of two applicants and the one signing has not been given a power of attorney by the other applicant.

Therefore, as the petition containing the statement of unintentional delay is not signed by all the inventors and the record herein fails to disclose that petitioner herein (Randal Boyd) **is an assignee of the entire interest and has complied with the provisions of 37 CFR 3.73(b)**, the petition is considered to not contain a proper statement of unintentional delay. As it appears that Mr. Boyd is signing on behalf of an assignee, compliance with 37 CFR 3.73(b) must be satisfied. In this regard, 37 CFR 3.73(b) provides:

> (1) In order to request or take action in a patent or trademark matter, the assignee must establish its ownership of the patent or trademark property of paragraph (a) of this section to the satisfaction of the Director. The establishment of ownership by the assignee may be combined with the paper that requests or takes the action. Ownership is established by submitting to the Office a signed statement identifying the assignee, accompanied by either:
>
> (i) Documentary evidence of a chain of title **from the original owner to the assignee** (e.g., copy of an executed assignment) For patent matters only, the submission of the documentary evidence must be accompanied by a statement affirming that the documentary evidence of the chain of title from the original owner to the assignee was or concurrently is being submitted for recordation pursuant to § 3.11; or
> (ii) A statement specifying where documentary evidence of a chain of title from the original owner to the assignee is recorded in the assignment records of the Office (e.g., reel and frame number).

(2) The submission establishing ownership must show that the person signing the submission is a person authorized to act on behalf of the assignee by:

(i) Including a statement that the person signing the submission is authorized to act on behalf of the assignee; or

(ii) Being signed by a person having apparent authority to sign on behalf of the assignee, *e.g.*, an officer of the assignee.

(c) For patent matters only:

(1) Establishment of ownership by the assignee must be submitted prior to, or at the same time as, the paper requesting or taking action is submitted.

(2) If the submission under this section is by an assignee of less than the entire right, title and interest, such assignee must indicate the extent (by percentage) of its ownership interest, or the Office may refuse to accept the submission as an establishment of ownership.

In view of the above, and as it appears that Mr. Boyd is signing the statement of unintentional delay as an assignee, then compliance with 37 CFR 3.73(b) must be satisfied. In view of the certification under 37 CFR 3.73(b), filed June 04, 2008 and resubmitted August 20, 2008, it appears that chain of title has not been established from Fifth Third Bank to Radio Systems Corporation. Therefore, the record is insufficient to disclose that petitioner herein (Randal Boyd) was ever given a power of attorney to act on behalf of the other inventors, **or that he is an assignee of the entire interest and has complied with the provisions of 37 CFR 3.73(b)**, the petition is considered to not contain a proper statement of unintentional delay.

In sum, petitioner must submit a petition containing a statement of unintentional delay and reply (amendment) signed by all the inventors, **unless** petitioner herein is the assignee of the entire right, title and interest in the instant application, then compliance with 37 CFR 3.73(b) must be satisfied.

The terminal disclaimer submitted August 20, 2008 is unnecessary. Accordingly the terminal disclaimer fee of $65 will be refunded to applicant in due course.

Further correspondence with respect to this matter should be addressed as follows:

By mail: Mail Stop PETITIONS
Commissioner for Patents
Post Office Box 1450
Alexandria, VA 22313-1450

By hand: Customer Service Window
Mail Stop Petitions
Randolph Building
401 Dulany Street
Alexandria, VA 22314

By fax: (703) 872-9306
ATTN: Office of Petitions

Telephone inquiries concerning this decision should be directed to Shelley Clement at (571)272-6052 or in her absence to the undersigned at (571)272-7099.

for David Bucci
Petitions Examiner
Office of Petitions

Enclosure: Certificate under 37 CFR 3.73(b) and Privacy Act Statement

cc: Randal D. Boyd
10427 Electric Avenue
Knoxville, TN 37932

PTO/SB/96 (09-08)
Approved for use through 10/31/2008. OMB 0651-0031
U.S. Patent and Trademark Office; U.S. DEPARTMENT OF COMMERCE
Under the Paperwork Reduction Act of 1995, no persons are required to respond to a collection of information unless it displays a valid OMB control number.

STATEMENT UNDER 37 CFR 3.73(b)

Applicant/Patent Owner: _____

Application No./Patent No.: _____ Filed/Issue Date: _____

Entitled:

_____, a _____
(Name of Assignee) (Type of Assignee, e.g., corporation, partnership, university, government agency, etc.)

states that it is:

1. ☐ the assignee of the entire right, title, and interest; or
2. ☐ an assignee of less than the entire right, title and interest (The extent (by percentage) of its ownership interest is _____ %)

in the patent application/patent identified above by virtue of either:

A. ☐ An assignment from the inventor(s) of the patent application/patent identified above. The assignment was recorded in the United States Patent and Trademark Office at Reel _____, Frame _____, or for which a copy therefore is attached.

OR

B. ☐ A chain of title from the inventor(s), of the patent application/patent identified above, to the current assignee as follows:

1. From: _____ To: _____

   The document was recorded in the United States Patent and Trademark Office at

   Reel _____, Frame _____, or for which a copy thereof is attached.

2. From: _____ To: _____

   The document was recorded in the United States Patent and Trademark Office at

   Reel _____, Frame _____, or for which a copy thereof is attached.

3. From: _____ To: _____

   The document was recorded in the United States Patent and Trademark Office at

   Reel _____, Frame _____, or for which a copy thereof is attached.

☐ Additional documents in the chain of title are listed on a supplemental sheet.

☐ As required by 37 CFR 3.73(b)(1)(i), the documentary evidence of the chain of title from the original owner to the assignee was, or concurrently is being, submitted for recordation pursuant to 37 CFR 3.11.

[NOTE: A separate copy (*i.e.*, a true copy of the original assignment document(s)) must be submitted to Assignment Division in accordance with 37 CFR Part 3, to record the assignment in the records of the USPTO. See MPEP 302.08]

The undersigned (whose title is supplied below) is authorized to act on behalf of the assignee.

_____ Signature

_____ Date

_____ Printed or Typed Name

_____ Telephone Number

_____ Title

This collection of information is required by 37 CFR 3.73(b). The information is required to obtain or retain a benefit by the public which is to file (and by the USPTO to process) an application. Confidentiality is governed by 35 U.S.C. 122 and 37 CFR 1.11 and 1.14. This collection is estimated to take 12 minutes to complete, including gathering, preparing, and submitting the completed application form to the USPTO. Time will vary depending upon the individual case. Any comments on the amount of time you require to complete this form and/or suggestions for reducing this burden, should be sent to the Chief Information Officer, U.S. Patent and Trademark Office, U.S. Department of Commerce, P.O. Box 1450, Alexandria, VA 22313-1450. DO NOT SEND FEES OR COMPLETED FORMS TO THIS ADDRESS. **SEND TO: Commissioner for Patents, P.O. Box 1450, Alexandria, VA 22313-1450.**

If you need assistance in completing the form, call 1-800-PTO-9199 and select option 2.

Privacy Act Statement

The **Privacy Act of 1974 (P.L. 93-579)** requires that you be given certain information in connection with your submission of the attached form related to a patent application or patent. Accordingly, pursuant to the requirements of the Act, please be advised that: (1) the general authority for the collection of this information is 35 U.S.C. 2(b)(2); (2) furnishing of the information solicited is voluntary; and (3) the principal purpose for which the information is used by the U.S. Patent and Trademark Office is to process and/or examine your submission related to a patent application or patent. If you do not furnish the requested information, the U.S. Patent and Trademark Office may not be able to process and/or examine your submission, which may result in termination of proceedings or abandonment of the application or expiration of the patent.

The information provided by you in this form will be subject to the following routine uses:

1. The information on this form will be treated confidentially to the extent allowed under the Freedom of Information Act (5 U.S.C. 552) and the Privacy Act (5 U.S.C 552a). Records from this system of records may be disclosed to the Department of Justice to determine whether disclosure of these records is required by the Freedom of Information Act.
2. A record from this system of records may be disclosed, as a routine use, in the course of presenting evidence to a court, magistrate, or administrative tribunal, including disclosures to opposing counsel in the course of settlement negotiations.
3. A record in this system of records may be disclosed, as a routine use, to a Member of Congress submitting a request involving an individual, to whom the record pertains, when the individual has requested assistance from the Member with respect to the subject matter of the record.
4. A record in this system of records may be disclosed, as a routine use, to a contractor of the Agency having need for the information in order to perform a contract. Recipients of information shall be required to comply with the requirements of the Privacy Act of 1974, as amended, pursuant to 5 U.S.C. 552a(m).
5. A record related to an International Application filed under the Patent Cooperation Treaty in this system of records may be disclosed, as a routine use, to the International Bureau of the World Intellectual Property Organization, pursuant to the Patent Cooperation Treaty.
6. A record in this system of records may be disclosed, as a routine use, to another federal agency for purposes of National Security review (35 U.S.C. 181) and for review pursuant to the Atomic Energy Act (42 U.S.C. 218(c)).
7. A record from this system of records may be disclosed, as a routine use, to the Administrator, General Services, or his/her designee, during an inspection of records conducted by GSA as part of that agency's responsibility to recommend improvements in records management practices and programs, under authority of 44 U.S.C. 2904 and 2906. Such disclosure shall be made in accordance with the GSA regulations governing inspection of records for this purpose, and any other relevant (*i.e.*, GSA or Commerce) directive. Such disclosure shall not be used to make determinations about individuals.
8. A record from this system of records may be disclosed, as a routine use, to the public after either publication of the application pursuant to 35 U.S.C. 122(b) or issuance of a patent pursuant to 35 U.S.C. 151. Further, a record may be disclosed, subject to the limitations of 37 CFR 1.14, as a routine use, to the public if the record was filed in an application which became abandoned or in which the proceedings were terminated and which application is referenced by either a published application, an application open to public inspection or an issued patent.
9. A record from this system of records may be disclosed, as a routine use, to a Federal, State, or local law enforcement agency, if the USPTO becomes aware of a violation or potential violation of law or regulation.

UNITED STATES PATENT AND TRADEMARK OFFICE

Commissioner for Patents
United States Patent and Trademark Office
P.O. Box 1450
Alexandria, VA 22313-1450
www.uspto.gov

PITTS AND BRITTIAN P C
P O BOX 51295
KNOXVILLE TN 37950-1295

MAILED

APR 10 2009

OFFICE OF PETITIONS

ON PETITION

In re Application of :
John W. NOTTINGHAM et al. :
Application No. 11/065,963 :
Filed: February 25, 2005 :
Attorney Docket No. 33056.00 :

This is a decision on the petition under 37 CFR 1.137(b), filed August 20, 2008, to revive the above-identified application, and supplemented December 15, 2008.

The petition is **GRANTED**.

The above-identified application became abandoned for failure to reply in a timely manner to the non-final Office action mailed March 28, 2007, which set a shortened statutory period for reply of three (3) months. No extensions of time under the provisions of 37 CFR 1.136(a) were obtained. Accordingly, the above-identified application became abandoned on June 29, 2008.

The petition satisfies the conditions for revival pursuant to the provisions of 37 CFR 1.137(b) in that (1) the reply in the form of an amendment; (2) the petition fee of $770; and (3) the required statement of unintentional delay have been received. Accordingly, the reply to the non-final Office action of March 28, 2007 is accepted as having been unintentionally delayed.

Telephone inquiries concerning this decision should be directed to Felix O. Figueroa at (571) 272-6052 or in his absence, the undersigned at (571) 272-7099.

The application file is being referred to Technology Center AU 3644 for appropriate action on the concurrently filed amendment.

David A. Bucci
Petitions Examiner
Office of Petitions

UNITED STATES PATENT AND TRADEMARK OFFICE

UNITED STATES DEPARTMENT OF COMMERCE
United States Patent and Trademark Office
Address: COMMISSIONER FOR PATENTS
P.O. Box 1450
Alexandria, Virginia 22313-1450
www.uspto.gov

PEACOCK MYERS, P.C.
201 THIRD STREET, N.W.
SUITE 1340
ALBUQUERQUE, NM 87102

Mail Date: 04/21/2010

Applicant	: Paul O. Zamora	: DECISION ON REQUEST FOR
Patent Number	: 7598224	: RECALCULATION of PATENT
Issue Date	: 10/06/2009	: TERM ADJUSTMENT IN VIEW
Appliction No	: 11/065,970	: OF WYETH AND NOTICE OF INTENT TO
Filed	: 02/24/2005	: ISSUE CERTIFICATE OF CORRECTION
		:

The Request for Recalculation is **GRANTED** to the extent indicated.

The patent term adjustment has been determined to be **342** days. The USPTO will *sua sponte* issue a certificate of correction reflecting the amount of PTA days determined by the recalculation.

Prior to the issuance of the certificate of correction, the USPTO will afford patentee an opportunity to be heard and request reconsideration. Accordingly, patentee has **one month or thirty (30) days**, whichever is longer, to file a request for reconsideration of this patent term adjustment calculation. See 35 U.S.C. 154(b)(3)(B)(ii) and 37 CFR 1.322(a)(4). No extensions of time will be granted under 37 CFR 1.136.

Patentee should use document code PET.OP if electronically filing a request for reconsideration of this patent term adjustment calculation. The patentee must also include the information required by 37 CFR 1.705(b)(2) and the fee required by 37 CFR 1.18(e). If patentee does not file a timely request for reconsideration of this patent term adjustment calculation including the information required by 37 CFR 1.705(b)(2) and the fee required by 37 CFR 1.18(e), the USPTO will issue a certificate of correction reflecting the PTA determination noted above.

Patentee should be aware that in order to preserve the right to review in the United States District Court for the District of Columbia of the USPTO patent term adjustment determination, patentee must ensure that he or she also take the steps required under 35 U.S.C. 154(b)(4)(A) in a timely manner. Nothing in the request for recalculation should be construed as providing an alternative time frame for commencing a civil action under 35 U.S.C. 154(b)(4)(A).

Any questions concerning this decision should be directed to the Office of Patent Legal Administration at 571-272-7702.

UNITED STATES PATENT AND TRADEMARK OFFICE

Commissioner for Patents
United States Patent and Trademark Office
P.O. Box 1450
Alexandria, VA 22313-1450
www.uspto.gov

MAIL

JUN 0 8 2005

DIRECTOR OFFICE
TECHNOLOGY CENTER 2600

KNOBBE MARTENS OLSON & BEAR LLP
2040 MAIN STREET
FOURTEENTH FLOOR
IRVINE CA 92614

In re Application of
Richard H. Wesselink, et al.
Application No. 11/065,999
Filed: February 24, 2005
For: **TEMPORARY SURVEILLANCE SYSTEM**

DECISION ON PETITION
TO MAKE SPECIAL

This is a decision on the petition filed February 24, 2005 under 37 CFR §1.102(d) to make the application special.

A grantable petition under 37 CFR §1.102(d) and MPEP §708.02, section II (Infringement), must be accompanied by the required fee and a statement alleging:

(1) that there is an infringing device or product actually on the market or method in use;
(2) that a rigid comparison of the alleged infringing device, product, or method with the claims of the application has been made, and that, in his or her opinion, some of the claims are unquestionably infringed; and
(3) that he or she has made or caused to be made a careful and thorough search of the prior art or has a good knowledge of the pertinent prior art. Further, Applicant must provide a copy of each of the references deemed most closely related to the subject matter encompassed by the claims if the references are not already of record.

The petitioner meets all the above-listed requirements. Accordingly, the petition is **GRANTED**.

The application will retain its special status throughout its entire prosecution, including any appeal to the Board of Patent Appeals and Interferences, subject only to diligent prosecution by the applicant.

The application is being forwarded to the examiner for expedited prosecution.

Dwayne Bost
Special Program Examiner
Technology Center 2600
Communications

UNITED STATES PATENT AND TRADEMARK OFFICE

Commissioner for Patents
United States Patent and Trademark Office
P.O. Box 1450
Alexandria, VA 22313-1450
www.uspto.gov

COPY MAILED

NOV 24 2006

OFFICE OF PETITIONS

Heller Ehrman White & Mcauliffe LLP
1717 Rhode Island Ave., N.W.
Washington D.C. 20036-3001

In re Application of

Alexander V. Pyntikov et al.
Application No. 11/066,002
Filed: February 25, 2005
Attorney Docket No. 40473-0025

DECISION ON PETITION TO WITHDRAW FROM RECORD

This is a decision on the Request to Withdraw as attorney or agent of record under 37 C.F.R. § 1.36(b), filed August 16, 2006.

The request is **APPROVED**.

A grantable request to withdraw as attorney/agent of record must be signed by every attorney/agent seeking to withdraw or contain a clear indication that one attorney is signing on behalf of another/others. A request to withdraw will not be approved unless at least 30 (thirty) days would remain between the date of approval and the later of the expiration date of a time to file a response or the expiration date of the maximum time period which can be extended under 37 C.F.R. § 1.136(a).

The request was signed by Patricia D. Granados on behalf of all attorneys of record who are associated with Customer No. 26633.

All attorneys/agents associated with the Customer No. 26633 have been withdrawn.

Applicant is reminded that there is no attorney of record at this time.

The request to change the correspondence of record is not acceptable as the requested correspondence address is not that of: (1) the first named signing inventor; or (2) an intervening assignee of the entire interest under 37 C.F.R 3.71. All future communications from the Office will be directed to the first named signing inventor at the first copied address below until otherwise properly notified by the applicant.

There is no outstanding Office action at this time.

Telephone inquiries concerning this decision should be directed to Terri Williams at 571-272-2991.

Terri Williams
Terri Williams
Petitions Examiner
Office of Petitions

cc: **Alexander V. Pyntikov**
21184 Sundial Court
Ashburn, VA 20148

cc: **Ronald J. Kamis**
Baker & Daniels LLP
805 15th Street, N.W.
Suite 700
Washington, D.C. 20005

UNITED STATES PATENT AND TRADEMARK OFFICE

UNITED STATES DEPARTMENT OF COMMERCE
United States Patent and Trademark Office
Address: COMMISSIONER FOR PATENTS
P.O. Box 1450
Alexandria, Virginia 22313-1450
www.uspto.gov

APPLICATION NUMBER	FILING OR 371 (c) DATE	FIRST NAMED APPLICANT	ATTY. DOCKET NO./TITLE
11/066,002	02/25/2005	Alexander V. Pyntikov	40473-0025

CONFIRMATION NO. 2379

OC000000021327840

OC000000021327840

26633
HELLER EHRMAN WHITE & MCAULIFFE LLP
1717 RHODE ISLAND AVE, NW
WASHINGTON, DC 20036-3001

Date Mailed: 11/22/2006

NOTICE REGARDING CHANGE OF POWER OF ATTORNEY

This is in response to the Power of Attorney filed 08/16/2006.

- The withdrawal as attorney in this application has been accepted. Future correspondence will be mailed to the new address of record. 37 CFR 1.33.

Terri S. Williams

TERRI S WILLIAMS
OP (571) 272-2991

FORMER ATTORNEY/AGENT COPY

UNITED STATES PATENT AND TRADEMARK OFFICE

Commissioner for Patents
United States Patent and Trademark Office
P.O. Box 1450
Alexandria, VA 22313-1450
www.uspto.gov

ADAMS & WILKS
17 BATTERY PLACE
SUITE 1231
NEW YORK, NY 10004

COPY MAILED

JAN 16 2008

OFFICE OF PETITIONS

In re Application of

Wakiyana, et al. :

Application No. 11/066,063

: DECISION ON PETITION

Filed: February 25, 2005

:

Attorney Docket No. S004-5471

This is a decision on the petition under 37 CFR 1.137(b), filed August 3, 2007, to revive the above-identified application.

The petition is **GRANTED**.

The above-cited application became abandoned for failure to reply in a timely manner to the non-final Office action mailed September 26, 2006, which set a shortened statutory period for reply of three (3) months from its mailing date. Extensions of time were available pursuant to 37 CFR 1.136. Accordingly, the application became abandoned on December 27, 2006. A Notice of Abandonment was mailed on May 1, 2007.

The amendment filed August 3, 2007, is noted.

The application is being forwarded to Technology Center 2800, GAU 2881 for further processing.

Telephone inquiries concerning this decision should be directed to the undersigned at (571) 272-3222.

Kenya A. McLaughlin
Petitions Attorney
Office of Petitions

UNITED STATES PATENT AND TRADEMARK OFFICE

Commissioner for Patents
United States Patent and Trademark Office
P.O. Box 1450
Alexandria, VA 22313-1450
www.uspto.gov

HOWARD & HOWARD ATTORNEYS PLLC
450 WEST FOURTH STREET
ROYAL OAK, MI 48067

COPY MAILED

AUG 3 1 2009

OFFICE OF PETITIONS

In re Application of	:	
Thomas E. Soukup, et al.	:	
Application No. 11/066,069	:	DECISION ON PETITION
Filed: February 25, 2005	:	
Attorney Docket No. 60,518-290	:	

This is a decision on the petition under the unintentional provisions of 37 CFR 1.137(b), filed June 23, 2009, to revive the above-identified application.

The application became abandoned for failure to reply in a timely manner to the non-final Office action mailed, November 17, 2008, which set a shortened statutory period for reply of three (3) months. No extensions of time under the provisions of 37 CFR 1.136(a) were obtained. Accordingly, the application became abandoned on February 18, 2009.

The petition satisfies the requirements of 37 CFR 1.137(b) in that petitioner has supplied (1) the reply in the form of an amendment, (2) the petition fee of $1620, and (3) a proper statement of unintentional delay.

The petition is **GRANTED**.

Telephone inquiries concerning this decision should be directed to undersigned at (571) 272-1642. All other inquiries concerning the examination or status of this application should be directed to the Technology Center.

This application is being referred to Technology Center AU 3714 for appropriate action by the Examiner in the normal course of business on the reply received June 15, 2009.

/AMW/
April M. Wise
Petitions Examiner
Office of Petitions

UNITED STATES PATENT AND TRADEMARK OFFICE

Commissioner for Patents
United States Patent and Trademark Office
P.O. Box 1450
Alexandria, VA 22313-1450
www.uspto.gov

DAVID S. NOSKOWICZ
IL01/3RD FLOOR
1303 EAST ALGONQUIN ROAD
SCHAUMBURG, IL 60196

COPY MAILED
SEP 18 2008

In re Application of	:	
Xiong et al.	:	
Application No. 11/066,090	:	DECISION ON PETITION
Filed: February 25, 2005	:	
Attorney Docket No. CS25693RL	:	

This is a decision on the petition under the unintentional provisions of 37 CFR 1.137(b), filed May 6, 2008, to revive the above-identified application.

The petition is **GRANTED**.

The application became abandoned for failure to timely file a reply within the meaning of 37 CFR 1.113 to the final Office action of March 8, 2007. The proposed reply required for consideration of a petition to revive must be a Notice of Appeal (and appeal fee required by 37 CFR 41.20(b)(2), an amendment that *prima facie* places the application in condition for allowance, a Request for Continued Examination and submission (37 CFR 1.114), or the filing of a continuing application under 37 CFR 1.53(b). See MPEP 711.03(c)(III)(A)(2). No extensions of time pursuant to the provisions of 37 CFR 1.136(a) were obtained. Accordingly, the date of abandonment of this application is June 9, 2007. A Notice of Abandonment was mailed February 6, 2008.

The petition satisfies the requirements of 37 CFR 1.137(b) in that petitioner has supplied (1) an Amendment; (2) the petition fee of $1,540.00; and (3) a proper statement of unintentional delay.

Further, the address given on the petition differs from the address of record a courtesy copy of this decision is being mailed to the address given on the petition; however, the Office will mail all future correspondence solely to the address of record.

Telephone inquiries concerning this decision should be directed to Joan Olszewski at (571) 272-7751.

This application is being referred to Technology Center AU 2617 for appropriate action by the Examiner in the normal course of business on the amendment submitted in accordance with 37 CFR 1.114.

/Liana Walsh/
Liana Walsh
Petitions Examiner
Office of Petitions

cc: David S. Noskowicz
600 North US Highway 45
Libertyville, Illinois 60048

UNITED STATES PATENT AND TRADEMARK OFFICE

Commissioner for Patents
United States Patent and Trademark Office
P.O. Box 1450
Alexandria, VA 22313-1450
www.uspto.gov

DAFFER MCDANIEL LLP
P.O. BOX 684908
AUSTIN, TX 78768

COPY MAILED

JUN 29 2007

OFFICE OF PETITIONS

In re Application of	:	
BROWN, Terry C.	:	
Application No. 11/066,103	:	DECISION ON PETITION
Filed: February 25, 2005	:	TO WITHDRAW
Attorney Docket No. **5953-00100**	:	FROM RECORD
	:	

This is a decision on the Request to Withdraw as attorney or agent under 37 C.F.R. § 1.36(b) or 37 C.F.R. § 10.40 filed December 05, 2006.

The request is **NOT APPROVED**.

A review of the file record indicates that Customer Number 35617 does not have power of attorney in this patent application nor is there any statement or evidence of record of employment in or otherwise being engaged in the proceedings in this patent application. Accordingly, the request to withdraw under 37 C.F.R. § 1.36(b) is not applicable.

All future communications from the Office will continue to be directed to the below-listed address until otherwise properly notified by the applicant.

Telephone inquires concerning this decision should be directed to Michelle R. Eason at 571-272-4231.

T. Williams

Terri Williams
Petitions Examiner
Office of Petitions

cc: **FORTKORT GRETHER & KELTON LLP**
9442 N. CAPITAL OF TEXAS HWY.
ARBORETUM PLAZA ONE, SUITE 500
AUSTIN, TX 78759

UNITED STATES PATENT AND TRADEMARK OFFICE

COMMISSIONER FOR PATENTS
UNITED STATES PATENT AND TRADEMARK OFFICE
P.O. BOX 1450
ALEXANDRIA, VA 22313-1450
WWW.USPTO.GOV

Paper No. None

Natalia Neikrug
300 W. 55th Street
Apt. 19B
New York NY 10019

COPY MAILED
SEP 12 2007
OFFICE OF PETITIONS

In re Application of :
Natalia Neikrug :
Application No. 11/066,110 : DECISION ON PETITION
Filed: February 25, 2005 : UNDER 37 C.F.R. § 1.137(B)
Title: COMPOSITIONS AND METHODS :
FOR THE TREATMENT OF ACNE :

This is a decision on the petition filed March 26, 2007, pursuant to 37 C.F.R. § 1.137(b)[1], to revive the above-identified application.

The concurrently submitted Revocation of Power of Attorney with New Power of Attorney and Change of Correspondence Address has been entered and made of record.

The above-identified application became abandoned for failure to reply in a timely manner to the non-final Office action, mailed June 12, 2006, which set a shortened statutory period for reply of three months. No response was received, and no extensions of

1 A grantable petition pursuant to 37 C.F.R. § 1.137(b) must be accompanied by:

(1) The reply required to the outstanding Office action or notice, unless previously filed;
(2) The petition fee as set forth in § 1.17(m);
(3) A statement that the entire delay in filing the required reply from the due date for the reply until the filing of a grantable petition pursuant to this paragraph was unintentional. The Commissioner may require additional information where there is a question whether the delay was unintentional, and;
(4) Any terminal disclaimer (and fee as set forth in § 1.20(d)) required pursuant to paragraph (d) of this section.

time under the provisions of 37 C.F.R. § 1.136(a) were requested. Accordingly, the above-identified application became abandoned on September 13, 2006. A notice of abandonment was mailed on January 11, 2007.

With the present petition, Petitioner has included both the petition fee and the proper statement of unintentional delay. The concurrently submitted amendment shall serve as the required reply. A terminal disclaimer is not required.

The petition is **GRANTED**.

The Technology Center will be notified of this decision. The Technology Center's support staff will notify the Examiner of this decision, so that the amendment that was received with the present petition can be processed.

The general phone number for OIPE is 571-272-4000. Telephone inquiries regarding this decision should be directed to the undersigned at (571) 272-3225.

Paul Shanoski
Senior Attorney
Office of Petitions
United States Patent and Trademark Office

UNITED STATES PATENT AND TRADEMARK OFFICE

Commissioner for Patents
United States Patent and Trademark Office
P.O. Box 1450
Alexandria, VA 22313-1450
www.uspto.gov

Paper No.

Natalia Neikrug
300 W. 55th Street
Apt. 19B
New York NY 10019

COPY MAILED

NOV 17 2008

OFFICE OF PETITIONS

In re Application of	:	
Natalia Neikrug	:	
Application No. 11/066,110	:	DECISION ON PETITION
Filed: February 25, 2005	:	PURSUANT TO
Title: COMPOSITIONS AND METHODS	:	37 C.F.R. § 1.137(B)
FOR THE TREATMENT OF ACNE	:	

This is a decision on the petition, pursuant to 37 C.F.R. § 1.137(b), to revive the above-identified application, filed on June 16, 2008.

This petition is **DISMISSED.**

The above-identified application became abandoned for failure to reply within the meaning of 37 C.F.R § 1.113 in a timely manner to the final Office action mailed October 12, 2007, which set a shortened statutory period for reply of three months. No extensions of time under the provisions of 37 C.F.R § 1.136(a) were obtained, and no response was received. Accordingly, the above-identified application became abandoned on January 13, 2008. A notice of abandonment was mailed on April 21, 2008.

A grantable petition pursuant to 37 C.F.R. § 1.137(b) must be accompanied by:

(1) The reply required to the outstanding Office action or notice, unless previously filed;
(2) The petition fee as set forth in 37 C.F.R. § 1.17(m);
(3) A statement that the entire delay in filing the required reply from the due date for the reply until the filing of a grantable petition

pursuant to this paragraph was unintentional. The Commissioner may require additional information where there is a question whether the delay was unintentional, and;

(4) Any terminal disclaimer (and fee as set forth in 37 C.F.R. § 1.20(d)) required pursuant to paragraph (d) of this section.

37 C.F.R. § 1.137(b)(3) requires a statement that the entire delay in filing the required reply from the due date for the reply until the filing of a grantable petition pursuant to 37 C.F.R. § 1.137(b) was unintentional. Since the statement contained in this petition varies from the language required by 37 C.F.R. § 1.137(b)(3), the statement contained in this petition is being construed as the statement required by 37 C.F.R. § 1.137(b)(3) and Petitioner must notify the Office if this is not a correct interpretation of the statement contained in this petition.

With this petition, Petitioner has submitted an amendment, the petition fee, and the proper statement of unintentional delay.

Petitioner has met the second and third requirements of Rule 1.137(b). The fourth requirement is not applicable, as a terminal disclaimer is not required.

Regarding the first requirement, the requirement has not been satisfied because Petitioner did not submit the required reply to the Office action. The required reply is the reply sufficient to have avoided abandonment, had such reply been timely filed.[1] In order for the application to be revived, Petitioner must submit a reply which satisfies 37 C.F.R. § 1.137(b)(1) (*i.e.*, a Notice of Appeal (and fee required by law); an amendment that *prima facie* places the application in condition for allowance; a continuing application under 37 C.F.R. § 1.53(b); a request for continuing examination under 37 C.F.R. § 1.114, if applicable; or a 37 C.F.R. § 1.129(a) submission, if applicable).

The Examiner has considered the amendment that was filed concurrently with this petition, and it has not been found to place this application in condition for allowance, for the reasons set forth in the attached Advisory Action.

---

1 See M.P.E.P. § 711.03(c).

Any reply must be submitted within **TWO MONTHS** from the mail date of this decision. Extensions of time under 37 C.F.R. § 1.136(a) are permitted. The reply should include a cover letter entitled "Renewed Petition Under 37 C.F.R. § 1.137(b)." This is not a final agency action within the meaning of 5 U.S.C § 704.

The renewed petition should indicate in a prominent manner that the attorney handling this matter is Paul Shanoski, and may be submitted by mail,[2] hand-delivery,[3] or facsimile.[4] Registered users of EFS-Web may alternatively submit a response to this decision via EFS-Web.[5]

If responding by mail, Petitioner is advised not to place the undersigned's name on the envelope. Only the information that appears in the footnote should be included - adding anything else to the address will delay the delivery of the response to the undersigned.

Telephone inquiries regarding *this decision* should be directed to the undersigned at (571) 272-3225.[6] All other inquiries concerning examination procedures or the attached Advisory Action should be directed to the Examiner.

/Paul Shanoski/
Paul Shanoski
Senior Attorney
Office of Petitions

Encl. Advisory Action

---

2 Mail Stop Petition, Commissioner for Patents, United States Patent and Trademark Office, P.O. Box 1450, Alexandria, VA, 22313-1450.
3 Customer Window, Randolph Building, 401 Dulaney Street, Alexandria, VA, 22314.
4 (571) 273-8300- please note this is a central facsimile number.
5 https://sportal.uspto.gov/authenticate/authenticateuserlocalepf.html
6 Petitioner will note that all practice before the Office should be in writing, and the action of the Office will be based exclusively on the written record in the Office. See 37 C.F.R. § 1.2. As such, Petitioner is reminded that no telephone discussion may be controlling or considered authority for any further action(s) of Petitioner.

UNITED STATES PATENT AND TRADEMARK OFFICE

Commissioner for Patents
United States Patent and Trademark Office
P.O. Box 1450
Alexandria, VA 22313-1450
www.uspto.gov

SEARETE LLC
CLARENCE T. TEGREENE
1756 - 114TH AVE., S.E.
SUITE 110
BELLEVUE WA 98004

COPY MAILED

NOV 2 8 2008

OFFICE OF PETITIONS

In re Application of	:	
Jung, et al.	:	
Application No. 11/066,112	:	DECISION
Filed: 25 February, 2005	:	
Attorney Docket No. 0904-003-038	:	
(IVEN004US0)		

This is a decision on the petition, filed on 12 September, 2008, considered as a petition under 37 C.F.R. §1.137(b) to revive the application as having been abandoned due to unintentional delay.

The petition under 37 C.F.R. §1.137(b) is **GRANTED**.

As to Allegations of
Unintentional Delay

The requirements of a grantable petition pursuant to 37 C.F.R. §1.137(b) are the petition and fee therefor, a reply, a proper statement of unintentional delay under the regulation, and, where applicable, a terminal disclaimer and fee. (However, it does not appear that a terminal disclaimer and fee are due here.)

BACKGROUND

The record reflects that:

Applicant, failed to reply timely and properly to the non-final Office action mailed on 28 February, 2008, with reply due absent extension of time on or before 28 May, 2008.

The application went abandoned after midnight 28 May, 2008.

It appears that the Office did not mail a Notice of Abandonment before the instant petition was filed.

On 12 September, 2008, Petitioner filed the instant petition with fee, a reply in the form of an amendment, and made the statement of unintentional delay.

The availability of applications and application papers online to applicants/practitioners who diligently associate their Customer Number with the respective application(s) now provides an applicant/practitioner on-demand information as to events/transactions in an application.

Out of an abundance of caution, Petitioners always are reminded that those registered to practice and all others who make representations before the Office are reminded to inquire into the underlying facts of representations made to the Office and support averments with the appropriate documentation–since all owe to the Office the continuing duty to disclose.[1]

STATUTES, REGULATIONS AND ANALYSIS

Congress has authorized the Commissioner to "revive an application if the delay is shown to the satisfaction of the Commissioner to have been "unavoidable." 35 U.S.C. §133 (1994).[2]
The regulations at 37 C.F.R. §1.137(a) and (b) set forth the requirements for a petitioner to revive a previously unavoidably or unintentionally, respectively, abandoned application under this congressional grant of authority.

Unintentional delays are those that do not satisfy the very strict statutory and regulatory requirements of unavoidable delay, and also, by definition, are not intentional.[3]))

As to Allegations of Unintentional Delay

The requirements under 37 C.F.R. §1.137(b) have been satisfied.

---

[1] See supplement of 17 June, 1999. The Patent and Trademark Office is relying on petitioner's duty of candor and good faith and accepting a statement made by Petitioner. See Changes to Patent Practice and Procedure, 62 Fed. Reg. at 53160 and 53178, 1203 Off. Gaz. Pat. Office at 88 and 103 (responses to comments 64 and 109)(applicant obligated under 37 C.F.R. §10.18 to inquire into the underlying facts and circumstances when providing statements to the Patent and Trademark Office).

[2] 35 U.S.C. §133 provides:

35 U.S.C. §133 Time for prosecuting application.
Upon failure of the applicant to prosecute the application within six months after any action therein, of which notice has been given or mailed to the applicant, or within such shorter time, not less than thirty days, as fixed by the Commissioner in such action, the application shall be regarded as abandoned by the parties thereto, unless it be shown to the satisfaction of the Commissioner that such delay was unavoidable.

[3] Therefore, by example, an unintentional delay in the reply might occur if the reply and transmittal form are to be prepared for shipment by the US Postal Service, but other pressing matters distract one's attention and the mail is not timely deposited for shipment.

CONCLUSION

Accordingly, The petition under 37 C.F.R. §1.137(b) is **granted**.

The instant application is released to Technology Center/AU (TC/AU) 2664 for further processing in due course.

Petitioner may find it beneficial to view Private PAIR within a fortnight of the instant decision to ensure that the revival has been acknowledged by the TC/AU in response to this decision. It is noted that all inquiries with regard to that change in status need be directed to the TC/AU where that change of status must be effected—that does not occur in the Office of Petitions.

Telephone inquiries regarding this decision may be directed to the undersigned at (571) 272-3214—it is noted, however, that all practice before the Office is in writing (see: 37 C.F.R. §1.2[4]) and the proper authority for action on any matter in this regard are the statutes (35 U.S.C.), regulations (37 C.F.R.) and the commentary on policy (MPEP). Therefore, no telephone discussion may be controlling or considered authority for Petitioner's action(s).

/John J. Gillon, Jr./
John J. Gillon, Jr.
Senior Attorney
Office of Petitions

---

[4] The regulations at 37 C.F.R. §1.2 provide:

§1.2 Business to be transacted in writing.

All business with the Patent and Trademark Office should be transacted in writing. The personal attendance of applicants or their attorneys or agents at the Patent and Trademark Office is unnecessary. The action of the Patent and Trademark Office will be based exclusively on the written record in the Office. No attention will be paid to any alleged oral promise, stipulation, or understanding in relation to which there is disagreement or doubt.

UNITED STATES PATENT AND TRADEMARK OFFICE

Commissioner for Patents
United States Patent and Trademark Office
P.O. Box 1450
Alexandria, VA 22313-1450
www.uspto.gov

LEE & HAYES, PLLC
601 W RIVERSIDE
SUITE 1400
SPOKANE WA 99201

MAILED

JUL 26 2010

OFFICE OF PETITIONS

In re Patent No. 7,756,300
Issued: July 13, 2010
Application No. 11/066,112
Filed: February 25, 2005
Attorney Docket No. QQ1- 0112US

: DECISION ON REQUEST
: FOR RECONSIDERATION
: OF PATENT TERM ADJUSTMENT
: AND
: NOTICE OF INTENT TO ISSUE
: CERTIFICATE OF CORRECTION

This is a decision on the PETITION FOR RECONSIDERATION OF PATENT TERM ADJUSTMENT DETERMINATION PURSUANT TO 37 C.F.R. § 1.705(b) filed on May 6, 2010, requesting that the patent term adjustment be corrected from 927 to 931 days. Since the patent has now issued, the request is being treated under 37 CFR 1.705(d). Applicant requests this correction in part on the basis that the Office will take in excess of three years to issue this patent and in light of the recent court decision in Wyeth v. Dudas, No. 07-1492 (D.D.C. September 30, 2008).[1]

The petition to correct the patent term adjustment indicated on the above-identified patent to indicate that the term of the above-identified patent is extended or adjusted by nine hundred twenty four days is **GRANTED to the extent indicated herein.**

It is undisputed that the period of examination delay, "A" delay", pursuant to 37 CFR 1.702(a)(1) is 671 days and the "B" delay period, the over three year period begins on February 25, 2008 and ends on April 12, 2009, the day before the RCE was filed and is 412 days. However, as the period of overlap begins on February 25, 2008 and ends on February 28, 2008, the period of overlap is 3 days, and therefore, considering the 3 days of overlap, the "B" delay is 409 days. As such, the patent term adjustment is 924 days (671 plus 412 minus 3 overlap minus 156 applicant delay), not 931 days.

The Office acknowledges submission of the $200.00 fee set forth in 37 CFR 1.18(e).

---

[1]Reconsidered in light of the Court of Appeals for the Federal Circuit's decision in *Wyeth v. Kappos*, 2009-1120 (Fed. Cir. 1-7-2010).

The Office will *sua sponte* issue a certificate of correction. Pursuant to 37 CFR 1.322, the Office will not issue a certificate of correction without first providing assignee or patentee an opportunity to be heard. Accordingly, patentees are given **one (1) month or thirty (30) days**, whichever is longer, from the mail date of this decision to respond. No extensions of time will be granted under § 1.136.

Nothing in this decision shall be construed as a waiver of the requirement of 35 U.S.C. 154(b)(4) that any civil action by an applicant dissatisfied with a determination made by the Director under 35 U.S.C. 154(b)(3) be filed in the United States District Court for the District of Columbia within 180 days after the grant of the patent.

The application is being forwarded to the Certificates of Correction Branch for issuance of a certificate of correction. The Office will issue a certificate of correction indicating that the term of the above-identified patent is extended or adjusted by **nine hundred twenty-four (924)** days.

Telephone inquiries specific to this decision should be directed to the undersigned Petitions Attorney at (571) 272-3212.

Patricia Faison-Ball

Patricia Faison-Ball
Senior Petitions Attorney
Office of Petitions

Enclosure: Copy of DRAFT Certificate of Correction

DRAFT

UNITED STATES PATENT AND TRADEMARK OFFICE

CERTIFICATE OF CORRECTION

PATENT : 7,756,300 B2

DATED : July 13, 2010

INVENTOR(S) : Edward K.Y. Jung

It is certified that error appears in the above-identified patent and that said Letters Patent is hereby corrected as shown below:

On the cover page,

[*] Notice: Subject to any disclaimer, the term of this patent is extended or adjusted under 35 USC 154(b) by (927) days

Delete the phrase "by 927 days" and insert – by 924 days--

UNITED STATES PATENT AND TRADEMARK OFFICE

Commissioner for Patents
United States Patent and Trademark Office
P.O. Box 1450
Alexandria, VA 22313-1450
www.uspto.gov

DON J. PELTO, LLP
SHEPPARD MULLIN RICHTER & HAMPTON, LLP
1300 I STREET, 11TH FLOOR EAST
WASHINGTON, DC 20005

COPY MAILED

AUG 1 8 2008

In re Application of	:	
TULLY, et al.	:	
Application No. 11/066,125	:	DECISION ON PETITION
Filed: February 25, 2005	:	TO WITHDRAW
Attorney Docket No. 17VV-137191	:	FROM RECORD
	:	

This is a decision on the Request to Withdraw as attorney or agent of record under 37 C.F.R. § 1.36(b), filed April 10, 2008.

The request is DISMISSED as moot.

A review of the file record indicates that the power of attorney to SHEPPARD MULLIN RICHTER & HAMPTON, LLP has been revoked by the assignee of the patent application on July 31, 2008. Accordingly, the request to withdraw under 37 C.F.R. § 1.36(b) is moot.

All future communications from the Office will continue to be directed to the below-listed address until otherwise notified by applicant.

Telephone inquires concerning this decision should be directed to the undersigned at 571-272- 7253.

Monica A. Graves
Petitions Examiner
Office of Petitions

CC: HELLER EHRMAN, LLP
4350 LA JOLLA VILLIAGE DRIVE, 7TH FLOOR
SAN DIEGO, CA 92122

UNITED STATES PATENT AND TRADEMARK OFFICE

Commissioner for Patents
United States Patent and Trademark Office
P.O. Box 1450
Alexandria, VA 22313-1450
www.uspto.gov

DON J. PELTO
Sheppard, Mullin, Richter & Hampton LLP
1300 I STREET, NW
11TH FLOOR EAST
WASHINGTON DC 20005

COPY MAILED

OCT 14 2008

OFFICE OF PETITIONS

In re Application of	:	
Tully et al.	:	
Application No.: 11/066125	:	DECISION ON
Filing or 371(c) Date: 02/25/2005	:	PETITION
Attorney Docket Number: 17VV-137191	:	

This is a decision in response to the Petition for Revival of Application Abandoned Unintentionally Under 37 CFR 1.137(b), filed July 31, 2008.

This Petition is hereby **granted**.

The above-identified application became abandoned for failure to timely and properly reply to the Notice of Non-Compliant Amendment ("Notice"), mailed December 6, 2007. The Notice set a one (1) month period for reply. Extensions of time were available under 37 CFR 1.136(a). No reply having been received, the application became abandoned on January 7, 2008. A Notice of Abandonment was mailed July 25, 2008.

Applicant files the present petition and Amendment in response to the Notice. Th Examiner has approved the Amendment. The petition satisfies the conditions for revival pursuant to the provisions of 37 CFR 1.137(b) in that the petition includes (1) the reply; (2) the petition fee; and (3) the required statement of unintentional delay. Accordingly, the reply is accepted as having been unintentionally delayed.

This application is being referred to Technology Center Art Unit 1649 for processing of the reply to the Notice filed with the petition in due course.

Telephone inquiries concerning this decision should be directed to the undersigned at (571) 272-3232.

/Derek L. Woods/
Derek L. Woods
Attorney
Office of Petitions

UNITED STATES PATENT AND TRADEMARK OFFICE

UNITED STATES DEPARTMENT OF COMMERCE
United States Patent and Trademark Office
Address: COMMISSIONER FOR PATENTS
P.O. Box 1450
Alexandria, Virginia 22313-1450
www.uspto.gov

APPLICATION NO.	FILING DATE	FIRST NAMED INVENTOR	ATTORNEY DOCKET NO.	CONFIRMATION NO.
11/066,152	02/25/2005	Youichi Tobita	009683-525	2959

7590 10/22/2007
BUCHANAN, INGERSOLL & ROONEY PC
POST OFFICE BOX 1404
ALEXANDRIA, VA 22313-1404

EXAMINER
ABDULSELAM, ABBAS I

ART UNIT	PAPER NUMBER
2629	

NOTIFICATION DATE	DELIVERY MODE
10/22/2007	ELECTRONIC

DECISION DISMISSING PETITION UNDER 37 CFR 1.138(c)

The declaration of express abandonment will not be recognized

This is in response to the petition under 37 CFR 1.138(c), for express abandonment to avoid publication of the above-identified application.

The petition is dismissed.

The express abandonment will **not** be recognized for the reason(s) indicated below:

1. ☐ The petition under 37 CFR 1.138(c) was not filed in sufficient time to permit the appropriate officials to recognize the abandonment and remove the application from the publication process.
2. ☐ The petition was not signed by a party authorized by 37 CFR 1.33(b)(1), (3) or (4).
3. ☒ The Application was published in compliance with 35 U.S.C. 122(b), and it is available on the USPTO web site at http://www.uspto.gov/patft/index.html.
4. ☐ Petition fee was not paid.

The application **has/will be published** as scheduled.

Telephone inquiries should be directed to the Office of Data Management at (571) 272-4200.

Patent Publication Branch
Office of Data Management

FORM PET650D (Rev. 08/07)

UNITED STATES PATENT AND TRADEMARK OFFICE

UNITED STATES DEPARTMENT OF COMMERCE
United States Patent and Trademark Office
Address: COMMISSIONER FOR PATENTS
P.O. Box 1450
Alexandria, Virginia 22313-1450
www.uspto.gov

ALSTON & BIRD, LLP
BANK OF AMERICA PLAZA
101 SOUTH TRYON STREET, SUITE 4000
CHARLOTTE, NC 28280-4000

Mail Date: 04/21/2010

Applicant	: Gregory H. Smith	: DECISION ON REQUEST FOR
Patent Number	: 7578481	: RECALCULATION of PATENT
Issue Date	: 08/25/2009	: TERM ADJUSTMENT IN VIEW
Appliction No	: 11/066,176	: OF WYETH AND NOTICE OF INTENT TO
Filed	: 02/25/2005	: ISSUE CERTIFICATE OF CORRECTION
		:

The Request for Recalculation is **GRANTED** to the extent indicated.

The patent term adjustment has been determined to be **1153** days. The USPTO will *sua sponte* issue a certificate of correction reflecting the amount of PTA days determined by the recalculation.

Prior to the issuance of the certificate of correction, the USPTO will afford patentee an opportunity to be heard and request reconsideration. Accordingly, patentee has **one month or thirty (30) days**, whichever is longer, to file a request for reconsideration of this patent term adjustment calculation. See 35 U.S.C. 154(b)(3)(B)(ii) and 37 CFR 1.322(a)(4). No extensions of time will be granted under 37 CFR 1.136.

Patentee should use document code PET.OP if electronically filing a request for reconsideration of this patent term adjustment calculation. The patentee must also include the information required by 37 CFR 1.705(b)(2) and the fee required by 37 CFR 1.18(e). If patentee does not file a timely request for reconsideration of this patent term adjustment calculation including the information required by 37 CFR 1.705(b)(2) and the fee required by 37 CFR 1.18(e), the USPTO will issue a certificate of correction reflecting the PTA determination noted above.

Patentee should be aware that in order to preserve the right to review in the United States District Court for the District of Columbia of the USPTO patent term adjustment determination, patentee must ensure that he or she also take the steps required under 35 U.S.C. 154(b)(4)(A) in a timely manner. Nothing in the request for recalculation should be construed as providing an alternative time frame for commencing a civil action under 35 U.S.C. 154(b)(4)(A).

Any questions concerning this decision should be directed to the Office of Patent Legal Administration at 571-272-7702.

UNITED STATES PATENT AND TRADEMARK OFFICE

UNITED STATES DEPARTMENT OF COMMERCE
United States Patent and Trademark Office
Address: COMMISSIONER FOR PATENTS
P.O. Box 1450
Alexandria, Virginia 22313-1450
www.uspto.gov

Juan Carlos A. Marquez
c/o Stites & Harbison PLLC
1199 North Fairfax Street
Suite 900
Alexandria, VA 22314-1437

Mail Date: 04/21/2010

Applicant	: Satoshi Tamaki	: DECISION ON REQUEST FOR
Patent Number	: 7656960	: RECALCULATION of PATENT
Issue Date	: 02/02/2010	: TERM ADJUSTMENT IN VIEW
Appliction No	: 11/066,185	: OF WYETH AND NOTICE OF INTENT TO
Filed	: 02/25/2005	: ISSUE CERTIFICATE OF CORRECTION
		:

The Request for Recalculation is **GRANTED** to the extent indicated.

The patent term adjustment has been determined to be **678** days. The USPTO will *sua sponte* issue a certificate of correction reflecting the amount of PTA days determined by the recalculation.

Prior to the issuance of the certificate of correction, the USPTO will afford patentee an opportunity to be heard and request reconsideration. Accordingly, patentee has **one month or thirty (30) days**, whichever is longer, to file a request for reconsideration of this patent term adjustment calculation. See 35 U.S.C. 154(b)(3)(B)(ii) and 37 CFR 1.322(a)(4). No extensions of time will be granted under 37 CFR 1.136.

Patentee should use document code PET.OP if electronically filing a request for reconsideration of this patent term adjustment calculation. The patentee must also include the information required by 37 CFR 1.705(b)(2) and the fee required by 37 CFR 1.18(e). If patentee does not file a timely request for reconsideration of this patent term adjustment calculation including the information required by 37 CFR 1.705(b)(2) and the fee required by 37 CFR 1.18(e), the USPTO will issue a certificate of correction reflecting the PTA determination noted above.

Patentee should be aware that in order to preserve the right to review in the United States District Court for the District of Columbia of the USPTO patent term adjustment determination, patentee must ensure that he or she also take the steps required under 35 U.S.C. 154(b)(4)(A) in a timely manner. Nothing in the request for recalculation should be construed as providing an alternative time frame for commencing a civil action under 35 U.S.C. 154(b)(4)(A).

Any questions concerning this decision should be directed to the Office of Patent Legal Administration at 571-272-7702.

UNITED STATES PATENT AND TRADEMARK OFFICE

COMMISSIONER FOR PATENTS
UNITED STATES PATENT AND TRADEMARK OFFICE
P.O. BOX 1450
ALEXANDRIA, VA 22313-1450
www.uspto.gov

BUCHANAN INGERSOLL PC
(INCLUDING BURNS, DOANE, SWECKER & MATHIS)
POST OFFICE BOX 1404
ALEXANDRIA VA 22313-1404

COPY MAILED

JUN 13 2006

OFFICE OF PETITIONS

ON PETITION

In re Application of :
Shino :
Application No. 11/066,198 :
Filed: February 25, 2005 :
Attorney Docket No. 018961-073 :
For: LIGAMENT GRAFT-FIXING APPARATUS

This is a decision on the petition under 37 CFR 1.181, filed January 9, 2006, to withdraw the holding of abandonment.

The petition under 37 CFR 1.181 is **GRANTED**.

The Office contended that the above-identified application became abandoned for failure to timely reply to the March 25, 2005 Notice to File Missing Parts of Nonprovisional Application, which set a two month extendable period for reply. No extensions of time or reply being received, the Office contended that this application became abandoned on May 26, 2005. A Notice of Abandonment was mailed on December 7, 2005.

Petitioner alleges that the March 25, 2005 Notice not received.

The showing required to establish non-receipt of an Office communication must include:

1. A statement from the practitioner stating that the Office communication was not received by the practitioner and attesting to the fact that a search of the file jacket and docket records indicates that the Office communication was not received.
2. A copy of the docket record where the non-received Office communication would have been entered had it been received and docketed must be attached to and referenced in practitioner's statement.[1]

[1] See notice entitled "Withdrawing the Holding of Abandonment When Office Actions Are Not Received," 1156 O.G. 53 (November 16, 1993).

Petitioner has submitted a copy of the docket record where the requirement would have been entered had the March 25, 2005 Notice been received. In addition, practitioner referenced the record in the petition and stated that a review of the application's file jacket for the March 25, 2005 Notice was fruitless. It is noted that the correspondence was returned to the Office on March 29, 2005.

Petitioner has established non-receipt. The petition is **granted**, the Notice of Abandonment is vacated, and the holding of abandonment is withdrawn.

After the mailing of this decision, the application will be returned to the Office of Initial Patent Examination for the re-mailing of the March 25, 2005 Notice with a new period set for reply.

Telephone inquiries may be directed to the undersigned at (571) 272-3230.

Shirene Willis Brantley

Shirene Willis Brantley
Senior Petitions Attorney
Office of Petitions

SPE RESPONSE FOR CERTIFICATE OF CORRECTION

Paper No.: _____

DATE : May 20, 2009

TO SPE OF : ART UNIT 2188

SUBJECT : Request for Certificate of Correction for Appl. No.: 11/062266 /7487296

Please respond to this request for a certificate of correction within 7 days.

FOR IFW FILES:

Please review the requested changes/corrections as shown in the **COCIN** document(s) in the IFW application image. No new matter should be introduced, nor should the scope or meaning of the claims be changed.

Please complete the response (see below) and forward the completed response to scanning using document code **COCX**.

FOR PAPER FILES:

Please review the requested changes/corrections as shown in the attached certificate of correction. Please complete this form (see below) and forward it with the file to:

Certificates of Correction Branch (CofC)
South Tower - 9A22
Palm Location 7580

Magdalene Talley
Certificates of Correction Branch

703-308-9390 ext. 120

Thank You For Your Assistance

The request for issuing the above-identified correction(s) is hereby:

Note your decision on the appropriate box.

- ☑ **Approved** — **All** changes apply.
- ☐ **Approved in Part** — Specify below which changes **do not** apply.
- ☐ **Denied** — State the reasons for denial below.

Comments: No new matter added. Corrections do not change scope of claims

SANJIV SHAH
SUPERVISORY PATENT EXAMINER
TECHNOLOGY CENTER 2100
SPE

2185
Art Unit

UNITED STATES PATENT AND TRADEMARK OFFICE

Commissioner for Patents
United States Patent and Trademark Office
P.O. Box 1450
Alexandria, VA 22313-1450
www.uspto.gov

MATTINGLY, STANGER, MALUR & BRUNDIDGE, P.C.
1800 DIAGONAL ROAD
SUITE 370
ALEXANDRIA, VA 22314

COPY MAILED

AUG 1 8 2005

OFFICE OF PETITIONS

In re Application of	:	
Inohara, et al.	:	
Application No. 11/066,269	:	ON PETITION
Filed: February 28, 2005	:	
Attorney Docket No.: 520.37631CX1	:	

This is a decision on the petition under 37 CFR 1.182, filed July 12, 2005, requesting that the above-identified application retain the presently accorded filing date with page 78 of the specification, as part of the original disclosure.

The petition is **dismissed**.

On February 28, 2005, the above-identified application was filed. However, on May 12, 2005, the Office of Initial Patent Examination mailed a "Notice of Omitted Items of Nonprovisional Application", stating that application had been accorded a filing date of February 28, 2005, and advising applicant that pages 78 of the specification appeared to have been omitted.

In response, on July 12, 2005, applicant filed the present petition. Applicant argues that the instant application is a continuation of a prior filed application and that the instant application incorporated by reference the entirety of the prior application, which page 78 of the specification, therefore, the instant application was complete on filing.

The Notice permits applicant to either: (1) promptly establish prior receipt in the Office of the items at issue (generally by way of a date-stamped postcard receipt (MPEP 503)), or (2) promptly submit the omitted items and accept the date of such submission as the application filing date. An applicant asserting that the missing items were in fact deposited in the Office with the application papers must file a petition (and the appropriate petition fee) with evidence of such deposit. An applicant desiring to submit the omitted items in a nonprovisional application and accept the date of such submission as the application filing date must file any omitted items with an oath or declaration in compliance with 37 CFR 1.63 and 1.64 referring to such omitted items and a petition under 37 CFR 1.182 (with the petition fee under 37 CFR 1.17(h) requesting the later filing date within two months of the date of the Notice (37 CFR 1.181(f)).

An applicant may incorporate by reference the prior application by including in the application-as-filed, a statement that such specifically enumerated prior application or applications are hereby incorporated by reference. The statement may appear in the specification or in the application transmittal letter. The inclusion of this incorporation by reference of the prior applications(s) will permit an applicant to amend the divisional application to include any subject matter in such prior application(s), without the need for a petition. See MPEP 201.06(c).

In view of the incorporation by reference of the prior application, page 78 of the specification is not new matter if it was part of the disclosure of the prior application. Prior to the first action on the merits, petitioner should file a preliminary amendment requesting entry of page 78 of the specification.

The application is being returned to the Office of Initial Patent Examination for further processing with a filing date of February 28, 2005, using only the application papers present on filing. The copy of the specification supplied will not be processed for examination, but will be kept in the application file.

As no evidence was provided that would suggest the Office misplaced that page 78 of the specification, is presumed that this petition was necessitated by the applicant's filing error, rather than an error on the part of the Office. The petition will not be refunded.

The application is being returned to the Office of Initial Patent Examination for further processing with a filing date of February 28, 2005.

Telephone inquiries concerning this decision may be directed to the undersigned at (571) 272-3222.

Kenya A. McLaughlin

Kenya A. McLaughlin
Petitions Attorney
Office of Petitions

UNITED STATES PATENT AND TRADEMARK OFFICE

Commissioner for Patents
United States Patent and Trademark Office
P.O. Box 1450
Alexandria, VA 22313-1450
www.uspto.gov

ANTONELLI, TERRY, STOUT & KRAUS, LLP
1300 NORTH SEVENTEENTH STREET
SUITE 1800
ARLINGTON VA 22209-3873

COPY MAILED
JUN 29 2006
OFFICE OF PETITIONS

In re Application of	:	
Ganesan et al.	:	DECISION ON PETITION
Application No. 11/066,288	:	TO WITHDRAW
Filed: February 28, 2005	:	FROM RECORD
Attorney Docket No. 3350-19B-CNT2	:	

This is a decision on the Request to Withdraw as attorney or agent of record under 37 C.F.R. § 1.36(b), filed June 24, 2005.

The request is **NOT APPROVED** as moot.

A review of the file record indicates that the power of attorney to the attorneys associated with Customer Number 20457 has been revoked by the assignee of the entire interest of the patent application. Accordingly, the request to withdraw under 37 C.F.R. § 1.36(b) is moot.

All future communications from the Office will continue to be directed to the first below-listed address until otherwise notified by applicant.

Telephone inquires concerning this decision should be directed to Petitions Examiner Liana Chase at 571-272- 3206. All other inquires concerning either the examination or status of the application should be directed to the Technology Center.

David Bucci
Petitions Examiner
Office of Petitions

cc:

SUTHERLAND ASBILL & BRENNAN LLP
999 PEACHTREE STREET, N.E.
ATLANTA GA 30309

MR. HANS DREYER
DIRECTOR, INTELLECTUAL PROPERTY (LEGAL DEPT.)
CHECKFREE CORPORATION
6000 PERIMETER DRIVE
DUBLIN, OH 43017-3233

UNITED STATES PATENT AND TRADEMARK OFFICE

Commissioner for Patents
United States Patent and Trademark Office
P.O. Box 1450
Alexandria, VA 22313-1450
www.uspto.gov

ANTONELLI, TERRY, STOUT & KRAUS, LLP
1300 NORTH SEVENTEENTH STREET
SUITE 1800
ARLINGTON, VA 22209-3873

COPY MAILED

MAY 16 2007

OFFICE OF PETITIONS

In re Application of	:	
Ravi GANESAN, et al	:	
Application No. 11/066,293	:	DECISION ON PETITION
Filed: February 28, 2005	:	TO WITHDRAW
Attorney Docket No. 3350-19B-CNT4	:	FROM RECORD
	:	

This is a decision on the Request to Withdraw as attorney or agent of record under 37 C.F.R. § 1.36(b), filed June 24, 2005.

The request is **DISMISSED** as moot.

A review of the file record indicates that the power of attorney given to Antonelli, Terry, Stout & Kraus, LLP has been revoked by the assignee of the patent application on November 23, 2005. Accordingly, the request to withdraw under 37 C.F.R. § 1.36(b) is moot.

The correspondence address of record has been changed and the new correspondence address is the first copied address indicated below.

There are no pending Office actions at the present time.

Telephone inquires concerning this decision should be directed to Diane Goodwyn at 571-272-6735.

April Wise
Petitions Examiner
Office of Petitions

cc: MR. HANS DREYER DIRECTOR
INTELLECTUAL PROPERTY
(LEGAL DEPARTMENT)
CHECK FREE CORPORATION
6000 PERIMETER DRIVE
DUBLIN, OH 43017-3233

UNITED STATES PATENT AND TRADEMARK OFFICE

UNITED STATES DEPARTMENT OF COMMERCE
United States Patent and Trademark Office
Address: COMMISSIONER FOR PATENTS
P.O. Box 1450
Alexandria, Virginia 22313-1450
www.uspto.gov

MICROSOFT CORPORATION
ONE MICROSOFT WAY
REDMOND, WA 98052

Mail Date: 04/21/2010

Applicant	: Erik W. Selberg	: DECISION ON REQUEST FOR
Patent Number	: 7660791	: RECALCULATION of PATENT
Issue Date	: 02/09/2010	: TERM ADJUSTMENT IN VIEW
Appliction No	: 11/066,297	: OF WYETH AND NOTICE OF INTENT TO
Filed	: 02/28/2005	: ISSUE CERTIFICATE OF CORRECTION
		:

The Request for Recalculation is **GRANTED** to the extent indicated.

The patent term adjustment has been determined to be **1381** days. The USPTO will *sua sponte* issue a certificate of correction reflecting the amount of PTA days determined by the recalculation.

Prior to the issuance of the certificate of correction, the USPTO will afford patentee an opportunity to be heard and request reconsideration. Accordingly, patentee has **one month or thirty (30) days**, whichever is longer, to file a request for reconsideration of this patent term adjustment calculation. See 35 U.S.C. 154(b)(3)(B)(ii) and 37 CFR 1.322(a)(4). No extensions of time will be granted under 37 CFR 1.136.

Patentee should use document code PET.OP if electronically filing a request for reconsideration of this patent term adjustment calculation. The patentee must also include the information required by 37 CFR 1.705(b)(2) and the fee required by 37 CFR 1.18(e). If patentee does not file a timely request for reconsideration of this patent term adjustment calculation including the information required by 37 CFR 1.705(b)(2) and the fee required by 37 CFR 1.18(e), the USPTO will issue a certificate of correction reflecting the PTA determination noted above.

Patentee should be aware that in order to preserve the right to review in the United States District Court for the District of Columbia of the USPTO patent term adjustment determination, patentee must ensure that he or she also take the steps required under 35 U.S.C. 154(b)(4)(A) in a timely manner. Nothing in the request for recalculation should be construed as providing an alternative time frame for commencing a civil action under 35 U.S.C. 154(b)(4)(A).

Any questions concerning this decision should be directed to the Office of Patent Legal Administration at 571-272-7702.

UNITED STATES PATENT AND TRADEMARK OFFICE

Commissioner for Patents
United States Patent and Trademark Office
P.O. Box 1450
Alexandria, VA 22313-1450
www.uspto.gov

SHOOK, HARDY & BACON L.L.P.
600 14TH STREET NW SUITE 800
WASHINGTON DC 20005-2004

COPY MAILED
JUN 0 9 2006
OFFICE OF PETITIONS

In re Application of	:	
Grey, Nicholas Gerald	:	DECISION ON PETITION
Application No. 11/066,298	:	TO WITHDRAW
Filed: February 28, 2005	:	FROM RECORD
Attorney Docket No. ERPC.118778	:	

This is a decision on the Request to Withdraw as attorney or agent of record under 37 C.F.R. § 1.36(b), filed March 15, 2006.

The request is **APPROVED**.

A grantable request to withdraw as attorney/agent of record must be signed by every attorney/agent seeking to withdraw or contain a clear indication that one attorney is signing on behalf of another/others. A request to withdraw will not be approved unless at least 30 (thirty) days would remain between the date of approval and the later of the expiration date of a time to file a response or the expiration date of the maximum time period which can be extended under 37 C.F.R. § 1.136(a).

The request was signed by Lawrence E. Carter on behalf of all attorneys of record who are associated with Customer Number 30902.

All attorneys/agents associated with Customer Number 30902 have been withdrawn. Applicant is reminded that there is no attorney of record at this time.

The request to change the correspondence of record is not acceptable as the requested correspondence address is not that of: (1) the first named inventor; or (2) the assignee of the entire interest. All future communications from the Office will continue to be directed to the first named inventor at the below-listed address until otherwise properly notified by the applicant.

Telephone inquires concerning this decision should be directed to Petitions Examiner Liana Chase at (571) 272-3206. All other inquires concerning either the examination or status of the application should be directed to the Technology Center.

David Bucci
Petitions Examiner
Office of Petitions

Cc:

NICHOLAS GERALD GREY
7 LAXTON CLOSE
CROWIE, WORCESTERSHIRE WR7 4BH

UNITED STATES PATENT AND TRADEMARK OFFICE

Commissioner for Patents
United States Patent and Trademark Office
P.O. Box 1450
Alexandria, VA 22313-1450
www.uspto.gov

WOMBLE CARLYLE SANDRIDGE & RICE, PLLC
ATTN: PATENT DOCKETING 32ND FLOOR
P.O. BOX 7037
ATLANTA, GA 30357-0037

MAILED

FEB 11 2009

OFFICE OF PETITIONS

In re Application of :
Rosenzweig et al. :
Application No. 11/066,299 : ON PETITION
Filed: February 28, 2008 :
Attorney Docket No. E081 1240.1 :

This is a decision on the petition under the unintentional provisions of 37 CFR 1.137(b), filed January 15, 2009, to revive the above-identified application.

The petition is **GRANTED**.

The application became abandoned for failure to timely file a reply within the meaning of 37 CFR 1.113 to the final Office action of November 2, 2007. The proposed reply required for consideration of a petition to revive must be a Notice of Appeal (and appeal fee required by 37 CFR 41.20(b)(2), an amendment that prima facie places the application in condition for allowance, a Request for Continued Examination and submission (37 CFR 1.114), or the filing of a continuing application under 37 CFR 1.53(b). See MPEP 711.03(c)(II)(A)(2). No extensions of time pursuant to the provisions of 37 CFR 1.136(a) were obtained. Accordingly, the date of abandonment of this application is February 3, 2008.

It is not apparent whether the statement of unintentional delay was signed by a person who would have been in a position of knowing that the entire delay in filing the required reply from the due date for the reply until the filing of a grantable petition pursuant to 37 CFR 1.137(b) was unintentional. Nevertheless, in accordance with 37 CFR 10.18, the statement is accepted as constituting a certification of unintentional delay. However, in the event that petitioner has no knowledge that the delay was unintentional, petitioner must make such an inquiry to ascertain that, in fact, the delay was unintentional. If petitioner discovers that the delay was intentional, petitioner must notify the Office.

The petition satisfies the requirements of 37 CFR 1.137(b) in that petitioner has supplied (1) the reply in the form of a Request for Continued Examination (RCE) and fee of $810, (2) the petition fee of $1,620, and (3) an adequate statement of unintentional delay.

Telephone inquiries concerning this decision should be directed to Alicia Kelley at (571) 272-6059.

This application is being referred to Technology Center AU 3723 for processing of the RCE and for appropriate action by the Examiner in the normal course of business in accordance with 37 CFR 1.114.

/SDB/

Sherry D. Brinkley
Petitions Examiner
Office of Petitions

UNITED STATES PATENT AND TRADEMARK OFFICE

Commissioner for Patents
United States Patent and Trademark Office
P.O. Box 1450
Alexandria, VA 22313-1450
www.uspto.gov

POSZ LAW GROUP, PLC
12040 SOUTH LAKES DRIVE, SUITE 101
RESTON VA 20191

COPY MAILED

FEB 13 2008

OFFICE OF PETITIONS

In re Application of	:	
Sanjeev K. Sharma et al.	:	
Application No. 11/066,307	:	DECISION GRANTING PETITION
Filed: February 28, 2005	:	UNDER 37 CFR 1.313(c)(2)
Attorney Docket No. 10X-421/XSI.120	:	

This is a decision on the petition under 37 CFR 1.313(c)(2), filed February 11, 2008, to withdraw the above-identified application from issue after payment of the issue fee.

The petition is **GRANTED**.

The above-identified application is withdrawn from issue for consideration of a submission under 37 CFR 1.114 (request for continued examination). *See* 37 CFR 1.313(c)(2).

Petitioner is advised that the issue fee paid on January 31, 2008 cannot be refunded. If, however, this application is again allowed, petitioner may request that it be applied towards the issue fee required by the new Notice of Allowance.[1]

Telephone inquiries should be directed to Terri Williams at (571) 272-2991.

This application is being referred to Technology Center AU 2182 for processing of the request for continued examination under 37 CFR 1.114 and for consideration of the concurrently filed Information Disclosure Statement.

Karen Creasy

Karen Creasy
Petitions Examiner
Office of Petitions

---

[1] *The request to apply the issue fee to the new Notice may be satisfied by completing and returning the new Part B – Fee(s) Transmittal Form (along with any balance due at the time of submission). Petitioner is advised that the Issue Fee Transmittal Form must be completed and timely submitted to avoid abandonment of the application.*

UNITED STATES PATENT AND TRADEMARK OFFICE

Commissioner for Patents
United States Patent and Trademark Office
P.O. Box 1450
Alexandria, VA 22313-1450
www.uspto.gov

STEPTOE & JOHNSON LLP
1330 CONNECTICUT AVENUE, N.W.
WASHINGTON, DC 20036

MAILED

MAR 04 2010

OFFICE OF PETITIONS

In re Application of
Wade F. Schott et al
Application No. 11/066,332
Filed: February 25, 2005
Attorney Docket No. 12492.0279-CIP

DECISION ON PETITION

This is a decision on the petition, filed November 5, 2009, which is being treated as a petition under 37 CFR 1.181 (no fee), requesting withdrawal of the holding of abandonment in the above-identified application.

The petition is **GRANTED**.

This application was held abandoned for failure to timely respond to the Office action of February 3, 2009, which set a three (3) month shortened statutory period for reply. Three month (3) extension of time pursuant to the provisions of 37 CFR 1.136(a) was obtained. A reply was due on or before August 3, 2009.

Petitioner states that a reply was in fact timely filed. To support this assertion, petitioner has submitted a copy of a return postcard which acknowledges receipt by the U.S. Patent and Trademark Office (USPTO) on July 29, 2009. The USPTO's record show the July 29, 2009 reply was timely received.

MPEP 503 states that "[a] post card receipt which itemizes and properly identifies the papers which are being filed serves as *prima facie* evidence of receipt in the USPTO of all the items listed thereon on the date stamped thereon by the USPTO." Accordingly, it is concluded that the response was timely received in the USPTO.

In view of the above, the holding of abandonment is hereby withdrawn and the application restored to pending status.

Inquiries concerning this decision should be directed to the undersigned at (571) 272-3210.

This application is being referred to Technology Center AU 2129 for appropriate action in the normal course of business on the reply received July 29, 2009.

Irvin Dingle
Petitions Examiner
Office of Petitions

UNITED STATES PATENT AND TRADEMARK OFFICE

Commissioner for Patents
United States Patent and Trademark Office
P.O. Box 1450
Alexandria, VA 22313-1450
www.uspto.gov

MAY - 9 2006

MCKEE, VOORHEES & SEASE, P.L.C.
ATTN: PIONEER HI-BRED
801 GRAND AVENUE, SUITE 3200
DES MOINES IA 50309-2721

In re Application of	:
Lori Carrigan	:
Serial No.: 11/066,335	: SUSPENSION OF ACTION
Filed: February 24, 2005	:
Attorney Docket No.: P06402US01- PHI 1602C	:

This is in reply to the petition under 37 CFR 1.103 to suspend action on this application at applicant's request for a period of six months, filed March 30, 2006.

A review of the file history shows that this is an unexamined application. Applicant requests that action on this application be suspended for six months in view of the fact that the claims in this case are substantially similar to claims in cases currently on appeal with the same Assignee.

§ 1.103 Suspension of action by the Office.

(a) Suspension for cause . On request of the applicant, the Office may grant a suspension of action by the Office under this paragraph for good and sufficient cause. The Office will not suspend action if a reply by applicant to an Office action is outstanding. Any petition for suspension of action under this paragraph must specify a period of suspension not exceeding six months. Any petition for suspension of action under this paragraph must also include:
(1) A showing of good and sufficient cause for suspension of action; and
(2) The fee set forth in § 1.17(g), unless such cause is the fault of the Office.

Applicant's petition requests suspension in view of the fact that the claims in this case are substantially similar to claims in cases currently on appeal with the same Assignee. No indication is given as to when these cases were filed, their status or approximate date of decision or resolution, nor how any decision would affect prosecution or patentability in this application. Also, in the instant case, no issues have as yet been developed and the issues ultimately developed may not be the same as those at the Board of Appeals. Further, it is not the general practice of the Office to suspend prosecution in unexamined applications except in extraordinary circumstances. None have been set forth in the petition. In summary, no showing of good or sufficient cause has been made.

In view of the above reason the petition is **DENIED**.

The application will be forwarded to the examiner for initial examination in turn.

Should there be any questions with respect to this action, please contact Marianne C. Seidel, by mail addressed to: Director, Technology Center 1600, P. O. BOX 1450, ALEXANDRIA, VA 22313-1450, or by telephone at 571-272-0584 or by facsimile transmission at the Office general facsimile number, 571-273-8300.

George C. Elliott

George Elliott
Director, Technology Center 1600

UNITED STATES PATENT AND TRADEMARK OFFICE

Commissioner for Patents
United States Patent and Trademark Office
P.O. Box 1450
Alexandria, VA 22313-1450
www.uspto.gov

PETER SU
530 LYTTON AVENUE
SECOND FLOOR
PALO ALTO CA 94301

COPY MAILED

NOV 30 2007

OFFICE OF PETITIONS

In re Application of	:	
Verma et al.	:	
Application No. 11/066,336	:	DECISION ON PETITION
Filed: February 23, 2005	:	
Attorney Docket No. CSWT 1003-1	:	

This is a decision on the petition under 37 C.F.R. § 1.137(b), filed November 5, 2007, to revive the above-identified application.

The petition is **DISMISSED**.

Any request for reconsideration must be submitted within TWO (2) MONTHS from the mail date of this decision. No further petition fee is required for the request. Extensions of time under 37 CFR 1.136(a) are permitted. The reconsideration request should include a cover letter entitled "Renewed Petition under 37 CFR 1.137(b)." This is **not** a final agency action within the meaning of 5 U.S.C. § 704.

A grantable petition under 37 CFR 1.137(b) must be accompanied by:
(1) the required reply,[1]
(2) the petition fee,
(3) a statement that the entire delay in filing the required reply from the due date for the reply until the filing of a grantable petition pursuant to 37 CFR 1.137(b) was unintentional, and
(4) a terminal disclaimer and fee if the application was filed on or before June 8, 1995 or if the application is a design application.

Where there is a question as to whether either the abandonment or the delay in filing a petition under 37 CFR 1.137 was unintentional, the Commissioner may require additional information.[2]

The instant petition lacks item (2) as listed above. Effective September 30, 2007, the petition fee increased from $750.00 to $770.00. Petitioner only submitted $750.00. Accordingly, an additional $20.00 is required for revival.

Further correspondence with respect to this matter should be addressed as follows:

---

[1] In a nonprovisional application abandoned for failure to prosecute, the required reply may be met by the filing of a continuing application. In an application or patent, abandoned or lapsed for failure to pay the issue fee or any portion thereof, the required reply must be the payment of the issue fee or any outstanding balance thereof.

[2] See MPEP 711.03(c)(III)(C) and (D).

By mail:	Mail Stop PETITIONS Commissioner for Patents Post Office Box 1450 Alexandria, VA 22313-1450
By hand:	Customer Window located at: U.S. Patent and Trademark Office Customer Service Window Randolph Building 401 Dulany Street Alexandria, VA 22314
By fax:	(571) 273-8300 ATTN: Office of Petitions

Any questions concerning this matter may be directed to the undersigned at (571) 272-3206.

Liana Walsh
Petitions Examiner
Office of Petitions

UNITED STATES PATENT AND TRADEMARK OFFICE

Commissioner for Patents
United States Patent and Trademark Office
P.O. Box 1450
Alexandria, VA 22313-1450
www.uspto.gov

PETER SU
530 LYTTON AVENUE
SECOND FLOOR
PALO ALTO CA 94301

COPY MAILED
JAN 11 2008
OFFICE OF PETITIONS

In re Application of	:	
Verma et al.	:	
Application No. 11/066,336	:	DECISION ON PETITION
Filed: February 23, 2005	:	
Attorney Docket No. CSWT 1003-1	:	

This is a decision on the renewed petition under the unintentional provisions of 37 CFR 1.137(b), filed December 6, 2007, to revive the above-identified application.

The petition is **GRANTED**.

Petitioner has supplied the additional payment towards the petition fee.

Telephone inquiries concerning this decision should be directed to the undersigned at (571) 272-3206.

This matter is being referred to Technology Center 2819 for further examination on the merits.

Liana Walsh
Petitions Examiner
Office of Petitions

UNITED STATES PATENT AND TRADEMARK OFFICE

Commissioner for Patents
United States Patent and Trademark Office
P.O. Box 1450
Alexandria, VA 22313-1450
www.uspto.gov

JAMES J. MULLEN
8202 CAMPODOLCINO DRIVE
CORPUS CHRISTI TX 78414

COPY MAILED

OCT 26 2007

OFFICE OF PETITIONS

In re Application of	:	ON PETITION
Sheehan et al.	:	
Application No. 11/066,337	:	
Filed: February 24, 2005	:	
Attorney Docket No. TRI-010	:	

This is a decision on the petition under 37 C.F.R. § 1.137(b), filed September 18, 2007, to revive the above-identified application.

The petition is **GRANTED.**

The petition satisfies the conditions for revival pursuant to the provisions of 37 CFR 1.137(b) in that (1) the reply in the form of the Issue Fee Transmittal with payment of the issue fee; (2) the petition fee; and (3) the required statement of unintentional delay have been received. Accordingly, the response has been accepted as having been unintentionally delayed.

This matter is being referred to the Publishing Division for processing into a patent.

Telephone inquiries regarding this decision should be directed to the undersigned at (571) 272-3206.

Liana Walsh
Petitions Examiner
Office of Petitions

UNITED STATES PATENT AND TRADEMARK OFFICE

Commissioner for Patents
United States Patent and Trademark Office
P.O. Box 1450
Alexandria, VA 22313-1450
www.uspto.gov

MAY 16 2006

MCKEE, VOORHEES & SEASE, P.L.C.
ATTN: PIONEER HI-BRED
801 GRAND AVENUE, SUITE 3200
DES MOINES IA 50309-2721

In re Application of	:
Mark David Hoffbeck	:
Serial No.: 11/066,338	: SUSPENSION OF ACTION
Filed: February 24, 2005	:
Attorney Docket No.: P06400US01- PHI 1600C	:

This is in reply to the petition under 37 CFR 1.103 to suspend action on this application at applicant's request for a period of six months, filed March 30, 2006.

A review of the file history shows that this is an unexamined application. Applicant requests that action on this application be suspended for six months in view of the fact that the claims in this case are substantially similar to claims in cases currently on appeal with the same Assignee.

§ 1.103 Suspension of action by the Office.

(a) Suspension for cause . On request of the applicant, the Office may grant a suspension of action by the Office under this paragraph for good and sufficient cause. The Office will not suspend action if a reply by applicant to an Office action is outstanding. Any petition for suspension of action under this paragraph must specify a period of suspension not exceeding six months. Any petition for suspension of action under this paragraph must also include:
(1) A showing of good and sufficient cause for suspension of action; and
(2) The fee set forth in § 1.17(g), unless such cause is the fault of the Office.

Applicant's petition requests suspension in view of the fact that the claims in this case are substantially similar to claims in cases currently on appeal with the same Assignee. No indication is given as to when these cases were filed, their status or approximate date of decision or resolution, nor how any decision would affect prosecution or patentability in this application. Also, in the instant case, no issues have as yet been developed and the issues ultimately developed may not be the same as those at the Board of Appeals. Further, it is not the general practice of the Office to suspend prosecution in unexamined applications except in extraordinary circumstances. None have been set forth in the petition. In summary, no showing of good or sufficient cause has been made.

In view of the above reason the petition is **DENIED**.

The application will be forwarded to the examiner for initial examination in turn.

Should there be any questions with respect to this action, please contact Marianne C. Seidel, by mail addressed to: Director, Technology Center 1600, P. O. BOX 1450, ALEXANDRIA, VA 22313-1450, or by telephone at 571-272-0584 or by facsimile transmission at the Office general facsimile number, 571-273-8300.

George C. Elliott

George Elliott
Director, Technology Center 1600

SPE RESPONSE FOR CERTIFICATE OF CORRECTION

Paper No.: _____

DATE : 7 25 07

TO SPE OF : ART UNIT 3723

SUBJECT : Request for Certificate of Correction for Appl. No.: 11/066343 Patent No.: 7226046

Please respond to this request for a certificate of correction within 7 days.

Please review the requested changes/corrections as shown in the **COCIN** document(s) in the IFW application image. No new matter should be introduced, nor should the scope or meaning of the claims be changed.

Please check claims

Please complete the response (see below) and forward the completed response to scanning using document code **COCX**.

Certificates of Correction Branch

703-308-9390 ext. 117

Thank You For Your Assistance

The request for issuing the above-identified correction(s) is hereby:

Note your decision on the appropriate box.

- ☑ Approved — All changes apply.
- ☐ Approved in Part — Specify below which changes do not apply.
- ☐ Denied — State the reasons for denial below.

Comments: Robert C. Watson

ROBERT C. WATSON
PRIMARY EXAMINER

Joseph J. Hail III
SPE

3723
Art Unit

UNITED STATES PATENT AND TRADEMARK OFFICE

Commissioner for Patents
United States Patent and Trademark Office
P.O. Box 1450
Alexandria, VA 22313-1450
www.uspto.gov

Paper No. None

BAKER BOTTS L.L.P.
2001 ROSS AVENUE, 6TH FLOOR
DALLAS TX 75201-2980

COPY MAILED

NOV 1 0 2005

OFFICE OF PETITIONS

In re Application of
Declan O'Keefe, Tracy L. Cameron, and
Christopher G. Chavez
Application No. 11/066,365
Filed: February 25, 2005
Attorney Docket No. 03-032 US2
(065274.0179)
Title: SYSTEM AND METHOD FOR
STIMULATING PERIPHERAL NERVES TO
TREAT PAIN

DECISION ON PETITION UNDER
C.F.R. §1.47(A)

This is in response to the petition under 37 C.F.R. §1.47(a)[1], filed October 21, 2005.

On February 25, 2005, the application was filed, identifying Declan O'Keefe, Tracy L. Cameron, and Christopher G. Chavez as joint inventors. The application was deposited without an executed oath or declaration. On March 24, 2005, a "Notice to File Missing Parts of Nonprovisional Application – Filing Date Granted" (Notice) was mailed, indicating that a fully executed oath or declaration and the associated surcharge were required. This Notice set a two-month period for reply.

[1]A grantable petition under 37 C.F.R. §1.47(a) requires:

(1) the petition fee of $200;
(2) a surcharge of either $65 or $130 if the petition is not filed at the time of filing the application, as set forth in 37 CFR § 1.16(e);
(3) a statement of the last known address of the non-signing inventors;
(4) either
  a) proof that a copy of the entire application (specification, claims, drawings, and the oath or declaration) was sent or given to the non-signing inventor for review and proof that the non-signing inventor refuses to join in the application or
  b) proof that the non-signing inventor cannot be found or reached after diligent effort;
(5) a declaration which complies with 37 CFR §1.63.

Along with the instant petition, Petitioner has submitted a declaration which has been executed by the second and third listed joint inventors, the petition fee, the surcharge, and a statement of facts. Petitioner has further included a five-month extension of time to make timely this response.

Petitioner has met requirements (1) – (2) above.

Regarding the third requirement, petitioner has failed to include a statement of the last known address of the non-signing inventor[2]. Petitioner has included the last known work address for the non-signing inventor, but has not set forth that Mr. O'Keefe customarily receives mail at his work address. On renewed petition, Petitioner should either provide this statement from one having firsthand knowledge of this fact or present the last known residential address of the non-signing inventor.

Regarding the fourth requirement, Petitioner has not shown that a *complete* copy of the application was sent to the non-signing inventor for his review.

The language "I have personally confirmed that on April 28, 2005, a copy of the patent application…[was] sent[3]…" strongly suggests that the declarant is not the individual who mailed the package to the non-signing inventor. As such, it does not appear that the declarant has first-hand knowledge of this event. On renewed petition, Petitioner should submit a statement from one having firsthand knowledge of the same.

Furthermore, as developed in MPEP 409.03(e), the Office requires these materials to be sent to the residence of the inventor, as that is most likely the location where he might receive mail. Unfortunately, it is not clear where precisely this address is, since no residential address has been revealed.

Also, Petitioner has asserted that the Federal Express tracking report establishes that the package was received by and signed or by an individual by the name of J. Carson, who apparently works at the non-signing inventor's place of business. It is not clear who this individual is, and it has not been established that this individual delivered the package to the non-signing inventor. What is clear is that the non-signing inventor did not receive the package directly from Federal Express, and it is not clear whether or not the package eventually found its way to the non-signing inventor.

As it is not clear if the non-signing inventor ever received the application, it follows that one cannot refuse to sign something which one has not seen. A refusal by an inventor to sign an oath or declaration when the inventor has not been presented with the application papers does not itself suggest that the inventor is refusing to join the application unless it is clear that the inventor understands exactly what he or she is being asked to sign and refuses to accept the application papers. It is reasonable to require that the inventor be presented with the application papers

---

2 See MPEP 409.03(e).

3 Declaration of Mr. Crain, paragraph 2.

before a petition under 37 CFR §1.47 is granted since such a procedure ensures that the inventor is apprised of the application to which the oath or declaration is directed[4].

If the non-signing inventor normally receives correspondence at work, then a statement to this effect should be supplied by one having firsthand knowledge of this. It is noted that the declaration does not contain a residential address for this individual. If the non-signing inventor normally receives mailings at home, then a complete copy of the application will need to be delivered to the residential address, as this is the location where the non-signing inventor customarily receives mail.

On renewed petition, Petitioner should mail a complete copy of the application to the last known residential address of the non-signing inventor, if the non-signing inventor does not normally receive correspondence at his place of business.

Regarding item (5) above, the declaration might fail to comply with 37 C.F.R. §1.63(c)(1) in that it is not clear where the non-signing inventor normally receives correspondence. On renewed petition, Petitioner might have to provide an acceptable declaration which bears the correct address, depending on the resolution of this issue.

As such, the petition is **DISMISSED**.

Any reply must be submitted within **TWO (2) MONTHS** from the mail date of this decision. Extensions of time under 37 C.F.R. §1.136(a) are permitted. The reply should include a cover letter entitled "Renewed Petition Under 37 C.F.R. 1.47(a)." This is not a final agency action within the meaning of 5 U.S.C §704.

The renewed petition should indicate in a prominent manner that the attorney handling this matter is Paul Shanoski, and may be submitted by mail[5], hand-delivery[6], or facsimile[7].

The application file will be retained in the Office of Petitions for two (2) months.

Telephone inquiries regarding *this decision* should be directed to the undersigned at (571) 272-3225. All other inquiries concerning examination procedures or status of the application should be directed to the Technology Center.

Paul Shanoski
Senior Attorney
Office of Petitions
United States Patent and Trademark Office

---

4 In re Gray, 115 USPQ 80 (Comm'r Pat. 1956).
5 Mail Stop Petition, Commissioner for Patents, United States Patent and Trademark Office, P.O. Box 1450, Alexandria, VA, 22313-1450.
6 Customer Window, Randolph Building, 401 Dulaney Street, Alexandria, VA, 22314.
7 (571) 273-8300- please note this is a central facsimile number.

UNITED STATES PATENT AND TRADEMARK OFFICE

COMMISSIONER FOR PATENTS
UNITED STATES PATENT AND TRADEMARK OFFICE
P.O. BOX 1450
ALEXANDRIA, VA 22313-1450
WWW.USPTO.GOV

Paper No. None

BAKER BOTTS L.L.P.
2001 ROSS AVENUE, 6TH FLOOR
DALLAS TX 75201-2980

COPY MAILED

JUN 05 2006

OFFICE OF PETITIONS

In re Application of Declan O'Keefe, Tracy L. Cameron, and Christopher G. Chavez Application No. 11/066,365 Filed: February 25, 2005 Attorney Docket No. 03-032 US2 (065274.0179) Title: SYSTEM AND METHOD FOR STIMULATING PERIPHERAL NERVES TO TREAT PAIN	DECISION NOTING JOINDER AND DISMISSING RENEWED PETITION UNDER 37 C.F.R. §1.47(A) AS MOOT

This is in response to the renewed petition under 37 C.F.R. §1.47(a)[1], filed May 4, 2006.

On February 25, 2005, the application was filed, identifying Declan O'Keefe, Tracy L. Cameron, and Christopher G. Chavez as joint inventors. The application was deposited without an executed oath or declaration. On March 24, 2005, a "Notice to

[1]A grantable petition under 37 C.F.R. §1.47(a) requires:

(1) the petition fee of $200;
(2) a surcharge of either $65 or $130 if the petition is not filed at the time of filing the application, as set forth in 37 CFR § 1.16(e);
(3) a statement of the last known address of the non-signing inventors;
(4) either
  a) proof that a copy of the entire application (specification, claims, drawings, and the oath or declaration) was sent or given to the non-signing inventor for review and proof that the non-signing inventor refuses to join in the application or
  b) proof that the non-signing inventor cannot be found or reached after diligent effort;
(5) a declaration which complies with 37 CFR §1.63.

File Missing Parts of Nonprovisional Application - Filing Date Granted" (Notice) was mailed, indicating that a fully executed oath or declaration and the associated surcharge were required. This Notice set a two-month period for reply.

The original petition was submitted on October 21, 2005, and was dismissed via the mailing of a decision on November 10, 2005. With the original petition, Petitioner had submitted a declaration which had been executed by Messrs. Cameron, and Chavez.

With this renewed petition, Petitioner has submitted a four-month extension of time to make timely this response. Petitioner has further secured an executed declaration from the previously non-signing joint inventor, and has provided a copy of the same.

As such, the renewed petition under 37 C.F.R. §1.47(a) is **DISMISSED AS MOOT.**

In view of the joinder of the joint inventor, further consideration under 37 CFR §1.47(a) is not necessary and the petition is considered moot. This application does not have any Rule 1.47(a) status. This application need not be returned to this Office for further consideration under 37 CFR §1.47(a).

The general phone number for the Office of Petitions which should be used for status requests is (571) 272-3282. Telephone inquiries regarding *this decision* should be directed to the undersigned at (571) 272-3225.

Paul Shanoski
Senior Attorney
Office of Petitions
United States Patent and Trademark Office

UNITED STATES PATENT AND TRADEMARK OFFICE

Commissioner for Patents
United States Patent and Trademark Office
P.O. Box 1450
Alexandria, VA 22313-1450
www.uspto.gov

MICHAEL RIES
1747A VERMONT DRIVE
ELK GROVE, IL 60007

COPY MAILED

JAN 25 2006

OFFICE OF PETITIONS

In re Application of	:	
Michael E. Horn	:	
Application No. 11/066,367	:	ON PETITION
Filed: February 25, 2005	:	
Attorney Docket No. MH0205	:	

This is a decision on the petition under 37 CFR 1.137(b), filed November 14, 2005, to revive the above-identified application.

The petition is **GRANTED**.

The above-identified application became abandoned for failure to reply in a timely manner to the Notice to File Missing Parts of Nonprovisional Application (Notice) mailed March 24, 2005. The Notice set a period for reply of two (2) months from the mail date of the Notice. No extensions of time under the provisions of 37 CFR 1.136(a) were obtained. Accordingly, the above-identified application became abandoned on May 25, 2005.

Telephone inquiries concerning this decision should be directed to Wan Laymon at (571) 272-3220.

This matter is being referred to the Office of Initial Patent Examination.

Wan Laymon
Petitions Examiner
Office of Petitions

UNITED STATES PATENT AND TRADEMARK OFFICE

Commissioner for Patents
United States Patent and Trademark Office
P.O. Box 1450
Alexandria, VA 22313-1450
www.uspto.gov

LOUIS J. WILLE
BRISTOL-MYERS SQUIBB COMPANY
PATENT DEPARTMENT
P O BOX 4000
PRINCETON NJ 08543-4000

COPY MAILED

MAY 12 2009

OFFICE OF PETITIONS

In re Patent No. 7,417,040
Issued: August 26, 2008
Application No. 11/066,373
Filed: February 25, 2005
Attorney Docket No. 10160USNP

: DECISION ON APPLICATION
: FOR PATENT TERM ADJUSTMENT

This is a decision on the "REQUEST FOR RECONSIDERATION OF PATENT TERM ADJUSTMENT PERIOD IN GRANTED PATENT UNDER 37 C.F.R. §§ 1.181 & 1.705(d)" filed October 24, 2008 and resubmitted December 1, 2008, requesting that the patent term adjustment determination for the above-identified patent be changed from three hundred eighteen (318) days to five hundred one (501) days.

The request for reconsideration of patent term adjustment is **DISMISSED**.

On August 26, 2008, the above-identified application matured into US Patent No. 7,417,040 with a patent term adjustment of 318 days. This request for reconsideration of patent term adjustment was timely filed within two months of the issue date of the patent. See 37 CFR 1.705(d).

The Office acknowledges submission of the $200.00 fee set forth in 37 CFR 1.18(e). No additional fees are required.

Patentees request recalculation of the patent term adjustment based on the decision in Wyeth v. Dudas, 580 F. Supp. 2d 138, 88 U.S.P.Q. 2d 1538 (D.D.C. 2008). Patentees assert that in view of the decision in Wyeth, they are "entitled to a total patent term adjustment of 501 days, which is the sum of 183 days of patent term adjustment due to exceeding three year pendency and 318 days due to USPTO delay in prosecution."

The 183-day period is calculated based on the application having been filed under 35 U.S.C. 111(a) on February 25, 2005, and the patent having been issued on August 26, 2008, three years and 183 days later. Patentees assert that in addition to this 183-day period, they are entitled to a period of adjustment due to examination delay pursuant to 37 CFR 1.702(a), of 318 days for the failure by the Office to mail at least

one of a notification under 35 U.S.C. 132 not later than fourteen months after the date on which the application was filed under 35 U.S.C. 111(a), pursuant to 37 CFR 1.702(a)(1). A Notice of Allowance was mailed on April 10, 2008, 14 months and 716 days after the application was filed on February 25, 2005.

Under 37 CFR 1.703(f), patentees are entitled to a period of patent term adjustment equal to the period of delays based on the grounds set forth in 37 CFR 1.702 reduced by the period of time equal to the period of time during which patentees failed to engage in reasonable efforts to conclude prosecution pursuant to 37 CFR 1.704. In other words, it is the period of Office delay reduced by the period of applicant delay. In this instance there is no dispute that there has been no reduction for applicant delay.

Patentees do not dispute that the total period of Office delay is the sum of the period of Three Years Delay (183 days) and the period of Examination Delay (318 days) to the extent that these periods of delay are not overlapping. However, in effect, patentees contend that no portion of the Three Year Delay period overlaps with the period of 14-month examination delay. Accordingly, patentees submit that the total period of adjustment for Office delay is 501 days, which is the sum of the period of Three Year Delay (183 days) and the period of Examination Delay (318 days), reduced by the period of overlap (0 days). As such, patentees assert entitlement to a patent term adjustment of 501 days (183 + 318 reduced by 0 overlap – 0 (applicant delay)).

The Office agrees that as of the issuance of the patent on August 26, 2008, the application was pending three years and 183 days after its filing date. The Office agrees that the action detailed above was not taken within the specified time frame, and thus, the entry of a period of adjustment of 318 days is correct. At issue is whether patentees should accrue 183 days of patent term adjustment for the Office taking in excess of three years to issue the patent, as well as 318 days for Office failure to take a certain action within a specified time frame (or examination delay).

The Office contends that 183 days overlap. Patentees' calculation of the period of overlap is inconsistent with the Office's interpretation of this provision. 35 U.S.C. 154(b)(2)(A) limits the adjustment of patent term, as follows:

> to the extent that the periods of delay attributable to grounds specified in paragraph (1) overlap, the period of any adjustment granted under this subsection shall not exceed the actual number of days the issuance of the patent was delayed.

Likewise, 35 CFR 1.703(f) provides that:

> To the extent that periods of delay attributable to the grounds specified in §

> 1.702 overlap, the period of adjustment granted under this section shall not exceed the actual number of days the issuance of the patent was delayed.

As explained in *Explanation of 37 CFR 1.703(f) and of the United States Patent and Trademark Office Interpretation of 35 U.S.C. 154(b)(2)(A)*, 69 Fed. Reg. 34283 (June 21, 2004), the Office interprets 35 U.S.C. 154(b)(2)(A) as permitting either patent term adjustment under 35 U.S.C. 154(b)(1)(A)(i)-(iv), or patent term adjustment under 35 U.S.C. 154(b)(1)(B), but not as permitting patent term adjustment under both 35 U.S.C. 154(b)(1)(A)(i)-(iv) and 154(b)(1)(B). Accordingly, the Office implements the overlap provision as follows:

> If an application is entitled to an adjustment under 35 U.S.C. 154(b)(1)(B), the entire period during which the application was pending (except for periods excluded under 35 U.S.C. 154(b)(1)(B)(i)-(iii)), and not just the period beginning three years after the actual filing date of the application, is the period of delay under 35 U.S.C. 154(b)(1)(B) in determining whether periods of delay overlap under 35 U.S.C. 154(b)(2)(A). Thus, any days of delay for Office issuance of the patent more than 3 years after the filing date of the application, which overlap with the days of patent term adjustment accorded prior to the issuance of the patent will not result in any additional patent term adjustment. See 35 U.S.C. 154(b)(1)(B), 35 U.S.C. 154(b)(2)(A), and 37 CFR § 1.703(f). See *Changes to Implement Patent Term Adjustment Under Twenty Year Term; Final Rule*, 65 Fed. Reg. 56366 (Sept. 18, 2000). See also *Revision of Patent Term Extension and Patent Term Adjustment Provisions; Final Rule*, 69 Fed. Reg. 21704 (April 22, 2004), 1282 Off. Gaz. Pat. Office 100 (May 18, 2004). See also *Explanation of 37 CFR 1.703(f) and of the United States Patent and Trademark Office Interpretation of 35 U.S.C. 154(b)(2)(A),* 69 Fed. Reg. 34283 (June 21, 2004).

The current wording of § 1.703(f) was revised in response to the misinterpretation of this provision by a number of Patentees. The rule was slightly revised to more closely track the corresponding language of 35 U.S.C. 154(b)(2)(A). The relevant portion differs only to the extent that the statute refers back to provisions of the statute whereas the rule refers back to sections of the rule. This was not a substantive change to the rule nor did it reflect a change of the Office's interpretation of 35 U.S.C. 154(b)(2)(A). As stated in the *Explanation of 37 CFR 1.703(f) and of the United States Patent and Trademark Office Interpretation of 35 U.S.C. 154(b)(2)(A)*, the Office has consistently taken the position that if an application is entitled to an adjustment under the three-year pendency provision of 35 U.S.C. 154(b)(1)(B), the entire period during which the application was pending before the Office (except for periods excluded under 35 U.S.C. 154(b)(1)(B)(i)-(iii)), and not just the period beginning three years after the actual filing date of the application, is the relevant period under 35 U.S.C. 154(b)(1)(B) in determining whether periods of delay "overlap" under 35 U.S.C. 154(b)(2)(A).

This interpretation is consistent with the statute. Taken together the statute and rule provide that to the extent that periods of delay attributable to grounds specified in 35 U.S.C. 154(b)(1) and in corresponding § 1.702 overlap, the period of adjustment granted shall not exceed the actual number of days the issuance of the patent was delayed. The grounds specified in these sections cover the A) guarantee of prompt Patent and Trademark Office responses, B) guarantee of no more than 3-year application pendency, and C) guarantee or adjustments for delays due to interference, secrecy orders and appeals. A section by section analysis of 35 U.S.C. 154(b)(2)(A) specifically provides that:

> Section 4402 imposes limitations on restoration of term. In general, pursuant to [35 U.S.C.] 154(b)(2)(A)-(C), total adjustments granted for restorations under [35 U.S.C. 154](b)(1) are reduced as follows: (1) To the extent that there are multiple grounds for extending the term of a patent that may exist simultaneously (e.g., delay due to a secrecy order under [35 U.S.C.] 181 and administrative delay under [35 U.S.C.] 154(b)(1)(A)), the term should not be extended for each ground of delay but only for the actual number of days that the issuance of a patent was delayed; See 145 Cong. Rec. S14,718[1]

As such, the period for over three-year pendency does not overlap only to the extent that the actual dates in the period beginning three years after the date on which the application was filed overlap with the actual dates in the periods for failure of the Office to take action within specified time frames. In other words, consideration of the overlap does not begin three years after the filing date of the application. It is incorrect to treat the relevant period as starting on February 25, 2008, the date that is three years after the actual filing date of the application.

In this instance, the relevant period under 35 U.S.C. 154(b)(1)(B) in determining whether periods of delay "overlap" under 35 U.S.C. 154(b)(2)(A) is the entire period during which the application was pending before the Office, February 25, 2005, to the date the patent issued on August 26, 2008. Prior to the issuance of the patent, 318 days of patent term adjustment were accorded for the Office failing to respond within a specified time frame during the pendency of the application. All of the 183 days for Office delay in issuing the patent overlap with the 318 days of Office delay. During that time, the issuance of the patent was delayed by 318 days, not 318 + 183 days. The Office took 14 months and 318 days to issue a first Office action. Otherwise, the Office took all actions set forth in 37 CFR 1.702(a) within the prescribed time frames. Nonetheless, given the initial 318 days of Office delay and the time allowed within the

---

[1] The AIPA is title IV of the Intellectual Property and Communications Omnibus Reform Act of 1999 (S. 1948), which was incorporated and enacted as law as part of Pub. L. 106-113. The Conference Report for H.R. 3194, 106th Cong. 1st Sess. (1999), which resulted in Pub. L. 106-113, does not contain any discussion (other than the incorporated language) of S. 1948. A section-by-section analysis of S. 1948, however, was printed in the Congressional Record at the request of Senator Lott, See 145 Cong. Rec. S14,708-26 (1999)(daily ed. Nov. 17, 1999).

time frames for processing and examination, as of the date the patent issued, the application was pending three years and 183 days. The Office did not delay 318 days and then an additional 183 days. Accordingly, 318 days of patent term adjustment (not 318 and 183 days) was properly entered since the period of delay of 183 days attributable to the delay in the issuance of the patent overlaps with the adjustment of 318 days attributable to grounds specified in § 1.702(a)(1). Entry of both periods is not warranted. Thus, 318 days is determined to be the actual number of days that the issuance of the patent was delayed, considering the 183 days over three years to the issuance of the patent.

Accordingly, at issuance, the Office properly entered no additional days of patent term adjustment for the Office taking in excess of three years to issue the patent.

In view thereof, no adjustment to the patent term will be made.

Patentees remain under a duty to disclose to the Office entry of additional patent term adjustment that is not warranted.

Telephone inquiries specific to this decision should be directed to Senior Petitions Attorney Patricia Faison-Ball at (571) 272-3212.

Kery A. Fries

Kery A. Fries
Senior Legal Advisor
Office of Patent Legal Administration
Office of Deputy Commissioner
for Examination Policy

UNITED STATES PATENT AND TRADEMARK OFFICE

Commissioner for Patents
United States Patent and Trademark Office
P.O. Box 1450
Alexandria, VA 22313-1450
www.uspto.gov

Barnes & Thornburg LLP
11 South Meridian
Indianapolis IN 46204

COPY MAILED

SEP 29 2006

OFFICE OF PETITIONS

In re Application of
Kim et al.
Application No. 11/066,402
Filed: February 25, 2005
Attorney Docket No. 3220-75956

DECISION ON PETITION

This is a decision on the petition under 37 CFR 1.181, filed January 5, 2006, requesting that the Office withdraw the holding of abandonment in the above-identified application.

This application was held abandoned for failure to respond in a timely manner to the Notice to File Missing Parts of Nonprovisional Application mailed on March 29, 2005. A Notice of Abandonment was mailed on December 8, 2005, and again on December 12, 2005. Petitioners asserted that they filed a timely and proper response as evidenced by their returned postcard receipt with a USPTO date-stamp of June 23, 2005. Petitioners submitted a copy of their date-stamped postcard receipt, as well as a copy of the response in the form of an executed declaration and a request for an extension of time for response within the first month.

Upon a review of the record, it appears that the application number in the heading of the response and in the present petition identified Application No. "10/066,402" rather than the intended Application No. "11/066,402." The response was located in the file of Application No. 10/066,402. A review of the correspondence indicates that the USPTO received the response on June 23, 2005, but it was not matched with the file due to the incorrect application number.

Under current Office procedure, if a paper having an incorrect application number contains sufficient information to identify the correct application and was timely received at the Office, the holding of abandonment will be withdrawn. In reviewing the papers, it is concluded that there was sufficient information thereon to associate the papers with the present application file.

For the reasons stated above, the petition is **granted**. The Notice of Abandonment is hereby withdrawn.

The matter is being referred to the Technology Center 2115 to review the response filed on June 23, 2005.

Telephone inquiries regarding this decision maybe directed to the undersigned at (571) 272-3211. All other questions concerning the status of the application or the examination process should be directed to the Technology Center.

C. T. Donnell

Christina Tartera Donnell
Senior Petitions Attorney
Office of Petitions

UNITED STATES PATENT AND TRADEMARK OFFICE

UNITED STATES DEPARTMENT OF COMMERCE
United States Patent and Trademark Office
Address: COMMISSIONER FOR PATENTS
P.O. Box 1450
Alexandria, Virginia 22313-1450
www.uspto.gov

ALSTON & BIRD LLP
BANK OF AMERICA PLAZA
101 SOUTH TRYON STREET, SUITE 4000
CHARLOTTE, NC 28280-4000

Mail Date: 04/21/2010

Applicant	: Sumeet Shroff	: DECISION ON REQUEST FOR
Patent Number	: 7647249	: RECALCULATION of PATENT
Issue Date	: 01/12/2010	: TERM ADJUSTMENT IN VIEW
Appliction No	: 11/066,404	: OF WYETH AND NOTICE OF INTENT TO
Filed	: 02/25/2005	: ISSUE CERTIFICATE OF CORRECTION
		:

The Request for Recalculation is **GRANTED** to the extent indicated.

The patent term adjustment has been determined to be **961** days. The USPTO will *sua sponte* issue a certificate of correction reflecting the amount of PTA days determined by the recalculation.

Prior to the issuance of the certificate of correction, the USPTO will afford patentee an opportunity to be heard and request reconsideration. Accordingly, patentee has **one month or thirty (30) days**, whichever is longer, to file a request for reconsideration of this patent term adjustment calculation. See 35 U.S.C. 154(b)(3)(B)(ii) and 37 CFR 1.322(a)(4). No extensions of time will be granted under 37 CFR 1.136.

Patentee should use document code PET.OP if electronically filing a request for reconsideration of this patent term adjustment calculation. The patentee must also include the information required by 37 CFR 1.705(b)(2) and the fee required by 37 CFR 1.18(e). If patentee does not file a timely request for reconsideration of this patent term adjustment calculation including the information required by 37 CFR 1.705(b)(2) and the fee required by 37 CFR 1.18(e), the USPTO will issue a certificate of correction reflecting the PTA determination noted above.

Patentee should be aware that in order to preserve the right to review in the United States District Court for the District of Columbia of the USPTO patent term adjustment determination, patentee must ensure that he or she also take the steps required under 35 U.S.C. 154(b)(4)(A) in a timely manner. Nothing in the request for recalculation should be construed as providing an alternative time frame for commencing a civil action under 35 U.S.C. 154(b)(4)(A).

Any questions concerning this decision should be directed to the Office of Patent Legal Administration at 571-272-7702.

UNITED STATES PATENT AND TRADEMARK OFFICE

UNITED STATES DEPARTMENT OF COMMERCE
United States Patent and Trademark Office
Address: COMMISSIONER FOR PATENTS
P.O. Box 1450
Alexandria, Virginia 22313-1450
www.uspto.gov

Jones Day (RIM) - 2N
North Point
901 Lakeside Avenue
Cleveland, OH 44114

Mail Date: 05/07/2010

Applicant	: Neil P. Adams	: DECISION ON REQUEST FOR
Patent Number	: 7627757	: RECALCULATION of PATENT
Issue Date	: 12/01/2009	: TERM ADJUSTMENT IN VIEW
Application No	: 11/066,406	: OF WYETH AND NOTICE OF INTENT TO
Filed	: 02/25/2005	: ISSUE CERTIFICATE OF CORRECTION
		:

The Request for Recalculation is **GRANTED** to the extent indicated.

The patent term adjustment has been determined to be **1114** days. The USPTO will *sua sponte* issue a certificate of correction reflecting the amount of PTA days determined by the recalculation.

Prior to the issuance of the certificate of correction, the USPTO will afford patentee an opportunity to be heard and request reconsideration. Accordingly, patentee has **one month or thirty (30) days**, whichever is longer, to file a request for reconsideration of this patent term adjustment calculation. See 35 U.S.C. 154(b)(3)(B)(ii) and 37 CFR 1.322(a)(4). No extensions of time will be granted under 37 CFR 1.136.

Patentee should use document code PET.OP if electronically filing a request for reconsideration of this patent term adjustment calculation. The patentee must also include the information required by 37 CFR 1.705(b)(2) and the fee required by 37 CFR 1.18(e). If patentee does not file a timely request for reconsideration of this patent term adjustment calculation including the information required by 37 CFR 1.705(b)(2) and the fee required by 37 CFR 1.18(e), the USPTO will issue a certificate of correction reflecting the PTA determination noted above.

Patentee should be aware that in order to preserve the right to review in the United States District Court for the District of Columbia of the USPTO patent term adjustment determination, patentee must ensure that he or she also take the steps required under 35 U.S.C. 154(b)(4)(A) in a timely manner. Nothing in the request for recalculation should be construed as providing an alternative time frame for commencing a civil action under 35 U.S.C. 154(b)(4)(A).

Any questions concerning this decision should be directed to the Office of Patent Legal Administration at 571-272-7702.

UNITED STATES PATENT AND TRADEMARK OFFICE

Commissioner for Patents
United States Patent and Trademark Office
P.O. Box 1450
Alexandria, VA 22313-1450
www.uspto.gov

FACTOR & LAKE, LTD
1327 W. WASHINGTON BLVD.
SUITE 5G/H
CHICAGO IL 60607

COPY MAILED

JUN 14 2005

OFFICE OF PETITIONS

In re Application of
Miskin, et al.
Application No. 11/066,414
Filed: February 26, 2005
Attorney Docket No. LYN-041204
For: AC LIGHT EMITTING DIODE AND AC LED DRIVE METHOD AND APPARATUS

ON PETITION

This is a decision on the petition, filed May 27, 2005, requesting, in effect, withdrawal of the Notice to File Corrected Application Papers, mailed March 25, 2005, insofar as it alleges that Figure 21 omitted upon filing. The petition will be treated under 37 CFR 1.53(e).

The petition under 37 CFR 1.53(e) is **DISMISSED**.

The application was filed on February 26, 1005. On March 25, 2005, the Office of Initial Patent Examination mailed a Notice informing petitioners, *inter alia*, that Figure 21 appeared to have been omitted.

In response to the Notice, petitioners filed the present petition. Petitioners request that Figure 21 be acknowledged as being filed on February 25, 2005. In support, the petition is accompanied by a copy of applicants' itemized postcard receipt showing an Office of Initial Patent Examination generated barcode citing February 25, 2005 as the date of receipt. The postcard lists, *inter alia*, that the filing included 24 sheets of drawings. A review of the application file reveals that only 23 sheets of drawings are present.

The return postcard constitutes *prima facie* evidence that 24 sheets of drawings were filed on September 25, 2005. MPEP 503.

Unfortunately, petitioners have not provided a copy of original Figure 21, as filed on February 25, 2005.

The application file will be retained in the Office of Petitions until a copy of original Figure 21 is submitted. Once the figure is received and the petition is granted, the $400.00 petition fee submitted with the instant petition will be credited to petitioners' deposit account.

The Office of Intial Patent Examination and the examiner of record will determine whether or not the replacement sheets of drawings – including Figure 20 now labeled Figure 20A and newly added Figures 20B, 20C, 20D, and 20E - are acceptable.

Further correspondence with respect to this matter should be addressed as follows:

By mail: Mail Stop PETITION
Commissioner for Patents
Post Office Box 1450
Alexandria, VA 22313-1450

By hand: U.S. Patent and Trademark Office
Customer Service Window, Mail Stop Petition
Randolph Building
401 Dulany Street
Alexandria, VA 22314

By FAX: (703) 872-9306 – ATTN: Office of Petitions

Any inquiries pertaining to this matter may be directed to the undersigned at (571) 272-3230.

E. Shirene Willis

E. Shirene Willis
Senior Petitions Attorney
Office of Petitions

UNITED STATES PATENT AND TRADEMARK OFFICE

Commissioner for Patents
United States Patent and Trademark Office
P.O. Box 1450
Alexandria, VA 22313-1450
www.uspto.gov

FACTOR & LAKE, LTD
1327 W. WASHINGTON BLVD.
SUITE 5G/H
CHICAGO IL 60607

COPY MAILED

AUG 1 3 2007

OFFICE OF PETITIONS

ON PETITION

In re Application of :
Miskin, et al. :
Application No. 11/066,414 :
Filed: February 25, 2005 :
Attorney Docket No. LYN-041204 :
For: AC LIGHT EMITTING DIODE AND AC LED DRIVE METHODS AND APPARATUS

This is a decision on the renewed petition, filed July 1, 2005, requesting, in effect, withdrawal of the Notice of Omitted Item(s) in a Nonprovisional Application (Notice), mailed November 22, 2005, insofar as the Notice alleges Figure 21 was omitted from the above-identified application when it was filed. The petition will be treated under 37 CFR 1.53(e).

The petition under 37 CFR 1.53(e) is **GRANTED**.

The application was filed on February 26, 1005. On March 25, 2005, the Office of Initial Patent Examination mailed a Notice informing petitioners, *inter alia*, that Figure 21 appeared to have been omitted.

In response to the Notice, petitioners filed the present petition. Petitioners request that Figure 21 be acknowledged as being filed on February 25, 2005. In support, the petition is accompanied by a copy of applicants' itemized postcard receipt showing an Office of Initial Patent Examination generated barcode citing February 25, 2005 as the date of receipt. The postcard lists, *inter alia*, that the filing included 24 sheets of drawings. A review of the application file reveals that only 23 sheets of drawings are present.

The return postcard constitutes *prima facie* evidence that 24 sheets of drawings were filed on September 25, 2005. MPEP 503. Accordingly, the request is granted.

After the mailing of this decision, the file will be returned to the Office of Initial Patent Examination for further processing with a filing date of February 25, 2005, using the copy of Figure 21, submitted with the instant petition. The examiner of record will determine whether or not certain of the replacement sheets of drawings – **including Figure 20 now labeled Figure 20A and newly added Figures 20B, 20C, 20D, and 20E** - are acceptable with respect to new matter issues.

Any inquiries pertaining to this matter may be directed to the undersigned at (571) 272-3230.

Shirene Willis Brantley

Shirene Willis Brantley
Senior Petitions Attorney
Office of Petitions

PTO/SB/83 (09-04)
Approved for use through 11/30/2005. OMB 0651-0035
U.S. Patent and Trademark Office, U.S. DEPARTMENT OF COMMERCE
Under the Paperwork Reduction Act of 1995, no persons are required to respond to a collection of information unless it displays a valid OMB control number.

REQUEST FOR WITHDRAWAL AS ATTORNEY OR AGENT AND CHANGE OF CORRESPONDENCE ADDRESS

Application Number	11/066,418
Filing Date	2/25/2005
First Named Inventor	Weiner, Michael L
Art Unit	
Examiner Name	
Attorney Docket Number	MLW-802

To: Commissioner for Patents
P.O. Box 1450
Alexandria, VA 22313-1450

Please withdraw me as attorney or agent for the above identified patent application, and

OCT 0 6 2005

☐ all the attorneys/agents of record.

☐ the attorneys/agents (with registration numbers) listed on the attached paper(s). or

☑ the attorneys/agents associated with Customer Number 37282

NOTE: This box can only be checked when the power of attorney of record in the application is to all the practitioners associated with a customer number.

The reasons for this request are as follows: The practitioner knows or it is obvious that the practitioner's continued employment will result in violation of a Disciplinary Rule, to wit, CFR Sec. 10.66(b) and as such, withdrawal is mandatory pursuant to 37 CFR Sec. 10.40 (b)(2). There is no outstanding action from the USPTO with a reply due within 60 days.

11/9/05

Approved

MCS

CORRESPONDENCE ADDRESS

1. ☐ The correspondence address is NOT affected by this withdrawal.
2. ☑ Change the correspondence address and direct all future correspondence to:

☐ The address associated with Customer Number:

OR

☑ Firm or Individual Name	Michael L. Weiner				
Address	Biomed Solutions, LLC 150 Lucius Gordon Drive Suite 215				
City	West Henrietta	State	NY	Zip	14568
Country	United States				
Telephone	(585) 214-2432	Fax	(585) 424-6538		
Signature					
Name	Howard J. Greenwald	Registration No.	24,247		
Date	October 6, 2005	Telephone No.	(585) 387-0285		

NOTE: Withdrawal is effective when approved rather than when received. Unless there are at least 30 days between approval of withdrawal and the expiration date of a time period for response or possible extension period, the request to withdraw is normally disapproved.

This collection of information is required by 37 CFR 1.36. The information is required to obtain or retain a benefit by the public which is to file (and by the USPTO to process) an application. Confidentiality is governed by 35 U.S.C. 122 and 37 CFR 1.11 and 1.14. This collection is estimated to take 12 minutes to complete, including gathering, preparing, and submitting the completed application form to the USPTO. Time will vary depending upon the individual case. Any comments on the amount of time you require to complete this form and/or suggestions for reducing this burden, should be sent to the Chief Information Officer, U.S. Patent and Trademark Office, U.S. Department of Commerce, P.O. Box 1450, Alexandria, VA 22313-1450. DO NOT SEND FEES OR COMPLETED FORMS TO THIS ADDRESS. SEND TO: Commissioner for Patents, P.O. Box 1450, Alexandria, VA 22313-1450.

If you need assistance in completing the form, call 1-800-PTO-9199 and select option 2.

HOWARD J. GREENWALD, P.C.
Patent Preparation, Prosecution, and Licensing
349 W. Commercial Street, Suite 2490
EAST ROCHESTER, NY 14445-2408

RECEIVED
CENTRAL FAX CENTER
OCT 0 6 2005

Howard J. Greenwald, Patent Attorney
Tracy P. Jong, Patent Attorney
Peter J. Mikesell, Patent Agent, Ph.D.

TELEPHONE (585) 387-0285
FACSIMILE (585) 387-0288
WWW.GREENWALDPC.COM

October 6, 2005

Mike Weiner
Biomed Solutions, LLC
150 Lucius Gordon Drive, Ste 215
West Henrietta, NY 14586

REQUEST OF WITHDRAWAL AS ATTORNEY AND CHANGE OF CORRESPONDENCE ADDRESS
DOCKET 802; USSN: 11/066,418
"PROCESS AND APPARATUS FOR TREATING BIOLOGICAL ORGANISMS"

Dear Mike:

Enclosed, please find a copy of **REQUEST OF WITHDRAWAL AS ATTORNEY OR AGENT AND CHANGE OF CORRESPONDENCE ADDRESS** filed with the United States Patent and Trademark Office. The withdrawal is not effective until granted by the United States Patent and Trademark Office.

There is currently nothing requiring a response to the United States Patent and Trademark Office within the next 60 days in this case. In this manner, no patent rights will be compromised. However, for your records, the next significant date you may wish to calendar in this matter, is as follows:

2/25/2006 Foreign filing Deadline

It is our understanding that you already have complete and accurate files of this application. At your request, we would be pleased to provide you with a redundant copy of our records.

Very truly yours,

Howard J. Greenwald

Enclosures

RECEIVED
CENTRAL FAX CENTER
OCT 06 2005

CERTIFICATE OF FACSIMILE TRANSMISSION

Request to Withdraw as Attorney or Agent

Application Number	11/066,418
Filing Date	2/25/2005
First Inventor	Weiner, Michael L
Examiner Name	
Art Unit	
Docket Number	MLW-802

Faxed to Number 703-872-9306 Total Pages 3

DATE OF TRANSMISSION: 10/06/2005

TITLE OF CASE:

Process and apparatus for treating biological organisms

The following documents are enclosed:

Certificate of Facsimile Transmission (1 page)

Request for Withdrawal as Attorney or Agent (1 page)
Notice to Client (1 page)

The above named documents are being facsimile transmitted to the United States Patent and Trademark Office on the date indicated above. The Director is authorized to charge any additional fee(s) as needed during the pendency of this application to deposit account 50-2753.

Howard J. Greenwald P.C.
349 W. Commercial Street, Suite 2490
East Rochester, NY 14445
Telephone (585) 387-0285
Fax (585) 387-0288

Signature of Transmitter: G Tredoux

___ Howard J. Greenwald, Reg. No. 24,247
___ William Six
___ Tracy P. Jong, Reg. No. 56,105
G TREDOUX

PLEASE NOTE: This facsimile message may contain information which is privileged, confidential, and exempt from disclosure under applicable laws and is intended only for the use of the individual named above and others who have been specifically authorized to receive it. If you are not the intended recipient, you are hereby notified that any dissemination, distribution or copying of the communication is strictly prohibited. If you have received this communication in error, please notify the law offices of HOWARD J. GREENWALD P.C. immediately by telephone at (585) 387-0285. You will be reimbursed for your telephone expense.

UNITED STATES PATENT AND TRADEMARK OFFICE

Commissioner for Patents
United States Patent and Trademark Office
P.O. Box 1450
Alexandria, VA 22313-1450
www.uspto.gov

GOTTLIEB RACKMAN & REISMAN PC
270 MADISON AVE
8TR FLOOR
NEW YORK NY 10016-0601

COPY MAILED

SEP 28 2007

OFFICE OF PETITIONS

In re Application of	:	
Young, et al.	:	
Application No. 11/066,420	:	ON PETITION
Filed: February 25, 2005	:	
Attorney Docket No. 5482-001	:	

This is a decision on the petition under 37 CFR 1.137(b), filed August 14, 2007, to revive the above-identified application.

The petition under 37 CFR 1.137(b) is **GRANTED**.

The above-identified application became abandoned for failure to timely file a response to the non-final Office action mailed December 13, 2006. This Office action set an extendable period for reply of three (3) months. Applicant purchased a one month extension of time on February 20, 2007. However, applicant never submitted a reply to the Office action. Accordingly, no reply having been received, the application became abandoned on April 14, 2006. A Notice of Abandonment was mailed on July 31, 2007.

With the instant petition, applicant paid the petition fee, made the proper statement of unintentional delay, and submitted the required reply in the form of an Amendment.

The matter is being forwarded to Group Art Unit 3611 for consideration of the Amendment filed August 14, 2007.

Telephone inquiries concerning this decision should be directed to the undersigned at (571)272-3207.

Cliff Congo
Petitions Attorney
Office of Petitions

UNITED STATES PATENT AND TRADEMARK OFFICE

Commissioner for Patents
United States Patent and Trademark Office
P.O. Box 1450
Alexandria, VA 22313-1450
www.uspto.gov

Paper No.

Thomas L. Irving
FINNEGAN, HENDERSON, FARABOW,
GARRETT & DUNNER, L.L.P.
901 New York Avenue, N.W.
Washington DC 20001

MAILED

SEP 28 2009

OFFICE OF PETITIONS

In re Patent No. 7,384,432	:	ON PETITION
Sabelle et al.	:	under 37 CFR 1.183
Issue Date: June 10, 2008	:	and
Application No. 11/066,450	:	ON REQUEST FOR RECONSIDERATION
Filed: February 28, 2005	:	OF PATENT TERM ADJUSTMENT
Atty Docket No. 06028.0088-00000	:	

This is a decision on the 1) Petition under 37 C.F.R. 1.183, requesting that the Office suspend the rules and consider on the merits a Request for Reconsideration of Patent Term Adjustment under 37 C.F.R. 1.705(d) filed more than two months from the date the above-referenced patent issued; and on the 2) Request for Determination of Patent Term Adjustment - Post Grant, both filed on December 5, 2008.

The petition under 37 CFR 1.183 is **dismissed**.

The request for reconsideration of patent term adjustment under 37 CFR 1.705(d) is **dismissed as untimely filed**.

Any request for reconsideration, whether directed to the decision on petition under 37 CFR 1.183 or to the decision on application for patent term adjustment under 37 CFR 1.705(d), must be filed within two months of the mailing date of this decision. Extensions of time under 37 CFR 1.136 are not permitted. See § 1.181(f).

BACKGROUND

On June 10, 2008, the above-identified application matured into U.S. Patent No. 7,384,432, with a revised patent term adjustment of 81 days. No request for reconsideration of the patent term

adjustment indicated in the patent was filed within two months of the date the patent issued. Patentee now petitions under 37 C.F.R. § 1.183 to (i) suspend or waive the requirement of 37 C.F.R. § 1.705(d) that a Request for Reconsideration of Patent Term Adjustment be filed within two months of the date the patent issued; and (ii) consider the enclosed Request for Reconsideration of Patent Term Adjustment. Patentee references the recent decision in Wyeth v. Dudas, No. 07-1492 (D.D.C. Sept. 30, 2008) as the basis for the petition.

ON PETITION UNDER 37 CFR 1.183
TO WAIVE THE TWO-MONTH REQUIREMENT OF 37 CFR 1.705(d)

The above-referenced patent issued on June 10, 2008. A request for reconsideration of the patent term adjustment indicated in the patent was not filed until December 5, 2008. Petitioner requests that the Office suspend the rules and consider on the merits the Request for Reconsideration of Patent Term Adjustment under 37 C.F.R. 1.705(d) even though it was untimely filed more than two months from the date the patent issued.

The relevant regulation, 37 CFR 1.705(d), provides that:

> If there is a revision to the patent term adjustment indicated in the notice of allowance, the patent will indicate the revised patent term adjustment. If the patent indicates or should have indicated a revised patent term adjustment, *any request for reconsideration of the patent term adjustment indicated in the patent must be filed within two months of the date the patent issued* and must comply with the requirements of paragraphs (b)(1) and (b)(2) of this section. Any request for reconsideration under this section that raises issues that were raised, or could have been raised, in an application for patent term adjustment under paragraph (b) of this section shall be dismissed as untimely as to those issues. (*emphasis* added).

By the express provisions of 37 CFR 1.705(d), a request for reconsideration of patent term adjustment must be filed within two months of the date the patent issued. It is undisputed that no such request for reconsideration was filed by August 10, 2008, the date two months from the date this patent issued, June 10, 2008. Rather, on December 5, 2008, more than two months after the issuance of a decision in Wyeth v. Dudas on September

30, 2008, petitioner filed the instant request for waiver of the two-month requirement.

37 CFR 1.183 provides that:

> In an extraordinary situation, when justice requires, any requirement of the regulations in this part which is not a requirement of the statutes may be suspended or waived by the Director or the Director's designee, *sua sponte*, or on petition of the interested party, subject to such other requirements as may be imposed. Any petition under this section must be accompanied by the petition fee set forth in § 1.17(f).

35 U.S.C. 154, requires the Office to provide the applicant one opportunity to request reconsideration of any patent term adjustment determination made by the Director, authorizes the Director to establish the procedures for requesting such reconsideration. Those procedures[1] include pursuant to 37 CFR 1.705(d) setting a two-month period for filing a request for reconsideration of the revised patent term adjustment indicated in the patent.

Having considered petitioner's arguments, it is concluded that waiver of the two-month requirement is not warranted. The primary basis for requesting waiver set forth by petitioner is

---

[1] 35 U.S.C. § 154(b)(3) provides that the USPTO shall: (1) prescribe regulations establishing procedures for the application for and determination of patent term adjustments under 35 U.S.C. § 154(b); (2) make a determination of any patent term adjustment under 35 U.S.C. § 154(b) and transmit a notice of that determination with the notice of allowance under 35 U.S.C. § 151; and (3) provide the applicant one opportunity to request reconsideration of any patent term adjustment determination. Pursuant to the mandate and authority in 35 U.S.C. § 154(b)(3), the USPTO promulgated 37 C.F.R. § 1.705, which provides that: (1) the notice of allowance will include notification of any patent term adjustment under 35 U.S.C. § 154(b)(37 C.F.R. § 1.705(a)); (2) any request for reconsideration of the patent term adjustment indicated in the notice of allowance (except as provided in 37 C.F.R. § 1.705(d)) must be by way of an application for patent term adjustment filed no later than the payment of the issue fee and accompanied by (inter alia) the fee set forth in 37 C.F.R. § 1.18(e)(37 C.F.R. § 1.705(b)); and (3) if the patent indicates or should have indicated a revised patent term adjustment, any request for reconsideration of the patent term adjustment indicated in the patent must be filed within two months of the date the patent issued.

the decision set forth in Wyeth v. Dudas, No. 07-1492 (D.D.C. Sept. 30, 2008).

Petitioner has not explained why it could not have filed a Request for Reconsideration of Patent Term Adjustment within two months of the date the above-referenced patent issued. Apparently, petitioner's argument is that the basis for the Request for Reconsideration of Patent Term Adjustment is the Wyeth decision, which was entered more than two months after the issuance of their patent.

The fact that any relief ultimately granted in Wyeth would benefit patentee had they timely filed a request for reconsideration does not make the situation extraordinary. Wyeth followed the procedure set forth in 37 CFR 1.705 for requesting reconsideration of the patent term adjustment determination. Then, pursuant to 35 U.S.C. 154(b)(4)(A), Wyeth timely filed a complaint in District Court seeking judicial review of the Office's decision. A Memorandum Opinion and Order, the Wyeth decision of September 30, 2008, directed to the parties involved was issued.

Petitioner chose not to challenge their revised patent term adjustment within the two-month period. Any argument that petitioner could not have filed a Request for Reconsideration of Patent Term Adjustment within two months of the date the above-referenced patent issued because the basis for the Request for Reconsideration of Patent Term Adjustment is the Wyeth decision, which was entered more than two months after the issuance of their patent, is not persuasive.

Petitioner could have filed a Request for Reconsideration of Patent Term Adjustment as Wyeth did. It is acknowledged that petitioner may have chosen not to file a request for reconsideration based on a conclusion that the Office's interpretation of 35 U.S.C. § 154(b)(2)(A) was correct. Nonetheless, the fact that the District Court has now issued an Opinion contrary to the Office's interpretation does not make the situation extraordinary. This is not unlike any other situation where a patentee (or applicant) challenges a final agency decision and the decision upon judicial review could have had applicability to another patentee (or applicant) had they taken such action. In fact, many patentees may be in the same situation as petitioner with respect to the Wyeth decision. In addition, given that the law only allows 180 days for both the

filing of a petition and for the Office's consideration of that petition, petitioner's unexplained nearly four-month delay in filing the petition weighs against them.

Petitioner simply fails to articulate how their failure to file a request for reconsideration of patent term adjustment within two months of the issue date of the patent was due to an extraordinary situation. Petitioner cannot rely on Wyeth's actions or the Wyeth decision to establish that their situation was extraordinary.

The contention that a decision is in error is a basis for a timely request for review of the decision but does not justify a delay in seeking review of such decision.

The Office provided notice that petitions under 37 CFR 1.182 and 1.183 or requests for certificate of corrections under 35 USC 354 and §1.323 or 35 U.S.C. 255 and §1.324 are not substitute *fora* to obtain to obtain reconsideration of a patent term adjustment determination indicated in a notice of allowance if applicant fails to submit a request for reconsideration within the time period specified in §1.705(b) or to obtain reconsideration of a patent term adjustment determination indicated in a patent if a patentee fails to submit a request for reconsideration within the time period specified in §1.705(d). See 69 Fed. Reg. 21704, 21707 (April, 22, 2004).

In view thereof, the petition under 37 CFR 1.183 for waiver of the two-month requirement of 37 CFR 1.705(d) is **dismissed**.

Accordingly, consideration now turns to the Request for Reconsideration of Patent Term Adjustment under 37 CFR 1.705(d).

ON REQUEST FOR RECONSIDERATION OF PATENT TERM ADJUSTMENT UNDER 37 CFR 1.705(d)

This is a decision on the "Request for Reconsideration of Patent Term Adjustment under 37 C.F.R. §1.705(d)," filed December 5, 2008. Therein, patentee requests correction of the patent term adjustment (PTA) indicated in the patent to one thousand two hundred three (103) days.

On June 10, 2008, the above-identified application matured into U.S. Patent No. 7,384,432 with a revised patent term adjustment

of 81 days. The instant request for reconsideration was filed more than five months after the issuance of the patent, on December 5, 2008.

No error in the printing of the patent has been shown. The patent term adjustment indicated on the patent reflects the Office's determination of patent term adjustment shown in the PAIR system for this application. 37 CFR 1.705(d) provides the sole avenue before the Office for requesting reconsideration of the Office's determination of patent term adjustment indicated in the patent. Moreover, § 1.705(d) states that "any request for reconsideration of the patent term adjustment indicated in the patent must be filed within two months of the date the patent issued and must comply with the requirements of paragraphs (b)(1) and (b)(2) of this section." Since the request was not filed within two months of the issue date of the patent, the request is properly **dismissed as untimely filed**.

CONCLUSION

It is determined that waiver of the requirement pursuant to 37 CFR 1.183 is not warranted. Accordingly, the request for reconsideration of the patent term adjustment under 37 CFR 1.705(d) filed more than two months after the issue date of the patent is dismissed as untimely filed.

Receipt of the fees required for the petition under 37 CFR 1.183 and the application for patent term adjustment is acknowledged.

Telephone inquiries specific to this matter should be directed to Nancy Johnson, Senior Petitions Attorney, at (571) 272-3219.

Nancy Johnson

Kery A. Fries
Senior Legal Advisor
Office of Patent Legal Administration
Office of the Deputy Commissioner
for Patent Examination Policy

UNITED STATES PATENT AND TRADEMARK OFFICE

Commissioner for Patents
United States Patent and Trademark Office
P.O. Box 1450
Alexandria, VA 22313-1450
www.uspto.gov

Alfred A. Stadnicki
Antonelli, Terry, Stout & Klaus, LLP
1300 North Seventeenth Street
Suite 1800
Arlington, VA 22209-3873

COPY MAILED

JUN 0 4 2009

OFFICE OF PETITIONS

In re Application of	:	
Ravi Ganesan et al.	:	
Application No. 11/066,458	:	DECISION ON PETITION
Filed: February 28, 2005	:	TO WITHDRAW
Attorney Docket No. 37090-2054	:	FROM RECORD
	:	

This is a decision on the Request to Withdraw as attorney or agent of record under 37 C.F.R. § 1.36(b), filed June 24, 2005.

The request is **moot because a revocation of power of attorney has been filed**.

A review of the file record indicates that the power of attorney to Alfred A. Stadnicki and all attorneys/agents of record has been revoked by the assignee of the patent application on July 20, 2005 and resubmitted on November 23, 2005. Accordingly, the request to withdraw under 37 C.F.R. § 1.36(b) is moot.

All future communications from the Office will continue to be directed to the below-listed address until otherwise notified by applicant.

Telephone inquires concerning this decision should be directed to Kimberly Inabinet at 571-272-4618.

Kimberly Inabinet
Petitions Examiner
Office of Petitions

cc: SUTHERLAND II
SUTHERLAND, ASBILL & BRENNAN, LLC
999 PEACHTREE STREET
ATLANTA GA 30309

SPE RESPONSE FOR CERTIFICATE OF CORRECTION

Paper No.: _____

DATE : March 21, 2008

TO SPE OF : ART UNIT 1751

SUBJECT : Request for Certificate of Correction for Appl. No 11/066459 patent no7300471 B2

Please respond to this request for a certificate of correction within 7 days.

Please review the requested changes/corrections as shown in the **COCIN** document(s) in the IFW application image. No new matter should be introduced, nor should the scope or meaning of the claims be changed.

Please complete the response (see below) and forward the completed response to scanning using document code **COCX**.

Magdalene Talley

Certificates of Correction Branch

703-308-9390 ext. 116

Thank You For Your Assistance

The request for issuing the above-identified correction(s) is hereby:

Note your decision on the appropriate box.

- ☑ **Approved** — **All** changes apply.
- ☐ **Approved in Part** — Specify below which changes **do not** apply.
- ☐ **Denied** — State the reasons for denial below.

Comments: _____

SPE

1796

Art Unit

PTOL-306 (REV. 7/03)

U.S. DEPARTMENT OF COMMERCE Patent and Trademark Office

UNITED STATES PATENT AND TRADEMARK OFFICE

Commissioner for Patents
United States Patent and Trademark Office
P.O. Box 1450
Alexandria, VA 22313-1450
www.uspto.gov

JUN - 2 2005

NIXON & VANDERHYE, PC
901 NORTH GLEBE ROAD, 11TH FLOOR
ARLINGTON VA 22203

In re Application of	:
Dana V. Ferraris et al	:
Serial No.: 11/066478	: STATUS LETTER
Filed: February 28, 2005	:
Attorney Docket No.: 2824-250	:

This is in response to applicants' attorneys' request, filed May 3, 2005, to withdraw from representation in the above identified application.

37 CFR 10.40 Withdrawal from employment.
(b) Mandatory withdrawal . A practitioner representing a client before the Office shall withdraw from employment if:
(1) The practitioner knows or it is obvious that the client is bringing a legal action, commencing a proceeding before the Office, conducting a defense, or asserting a position in litigation or any proceeding pending before the Office, or is otherwise having steps taken for the client, merely for the purpose of harassing or maliciously injuring any person;
(2) The practitioner knows or it is obvious that the practitioner's continued employment will result in violation of a Disciplinary Rule;
(3) The practitioner's mental or physical condition renders it unreasonably difficult for the practitioner to carry out the employment effectively; or
(4) The practitioner is discharged by the client.
(c) Permissive withdrawal. If paragraph (b) of this section is not applicable, a practitioner may not request permission to withdraw in matters pending before the Office unless such request or such withdrawal is because:
(1) The petitioner's client:
(i) Insists upon presenting a claim or defense that is not warranted under existing law and cannot be supported by good faith argument for an extension, modification, or reversal of existing law;
(ii) Personally seeks to pursue an illegal course of conduct;
(iii) Insists that the practitioner pursue a course of conduct that is illegal or that is prohibited under a Disciplinary Rule;
(iv) By other conduct renders it unreasonably difficult for the practitioner to carry out the employment effectively;
(v) Insists, in a matter not pending before a tribunal, that the practitioner engage in conduct that is contrary to the judgment and advice of the practitioner but not prohibited under the Disciplinary Rule; or
(vi) Has failed to pay one or more bills rendered by the practitioner for an unreasonable period of time or has failed to honor an agreement to pay a retainer in advance of the performance of legal services.
(2) The practitioner's continued employment is likely to result in a violation of a Disciplinary Rule;
(3) The practitioner's inability to work with co-counsel indicates that the best interests of the client likely will be served by withdrawal;
(4) The practitioner's mental or physical condition renders it difficult for the practitioner to carry out the employment effectively;
(5) The practitioner's client knowingly and freely assents to termination of the employment; or

(6) The practitioner believes in good faith, in a proceeding pending before the Office, that the Office will find the existence of other good cause for withdrawal.

Applicants' attorney has provided no reason for withdrawal, as required.

The request to withdraw is **DISMISSED**.

Should there be any questions with regard to this letter please contact William R. Dixon, Jr. by letter addressed to the Director, Technology Center 1600, PO BOX 1450, ALEXANDRIA, VA 22313-1450, or by telephone at 571-272-0519 or by facsimile transmission at Office facsimile number 571-273-8300.

William R. Dixon, Jr.
Special Program Examiner
Technology Center 1600

RECEIVED
CENTRAL FAX CENTER

MAY 0 3 2005

PTO/SB/83 (04-05)
Approved for use through 11/30/2005. OMB 0651-0035
U.S. Patent and Trademark Office, U.S. DEPARTMENT OF COMMERCE
Under the Paperwork Reduction Act of 1995, no persons are required to respond to a collection of information unless it displays a valid OMB control number.

REQUEST FOR WITHDRAWAL AS ATTORNEY OR AGENT AND CHANGE OF CORRESPONDENCE ADDRESS

Application Number	11/066,478
Filing Date	28 February 2005
First Named Inventor	Ferraris
Art Unit	
Examiner Name	
Attorney Docket Number	2824-250

To: Commissioner for Patents
P.O. Box 1450
Alexandria, VA 22313-1450

NOT Approved
WILLIAM R. DIXON, JR.
SPECIAL PROGRAM EXAMINER

Please withdraw me as attorney or agent for the above identified patent application, and

- [x] all the attorneys/agents of record.
- [ ] the attorneys/agents (with registration numbers) listed on the attached paper(s), or
- [x] the attorneys/agents associated with Customer Number 23117

NOTE: This box can only be checked when the power of attorney of record in the application is to all the practitioners associated with a customer number.

The reasons for this request are:

CORRESPONDENCE ADDRESS

1. [ ] The correspondence address is NOT affected by this withdrawal.
2. [ ] Change the correspondence address and direct all future correspondence to:

[x] The address associated with Customer Number: 30678

OR

[ ] Firm or Individual Name					
Address					
City		State		Zip	
Country					
Telephone				Email	
Signature					
Name	B. J. Sadoff		Registration No.	36663	
Date	May 3, 2005		Telephone No.	7038164000	

NOTE: Withdrawal is effective when approved rather than when received. Unless there are at least 30 days between approval of withdrawal and the expiration date of a time period for response or possible extension period, the request to withdraw is normally disapproved.

This collection of information is required by 37 CFR 1.36. The information is required to obtain or retain a benefit by the public which is to file (and by the USPTO to process) an application. Confidentiality is governed by 35 U.S.C. 122 and 37 CFR 1.11 and 1.14. This collection is estimated to take 12 minutes to complete, including gathering, preparing, and submitting the completed application form to the USPTO. Time will vary depending upon the individual case. Any comments on the amount of time you require to complete this form and/or suggestions for reducing this burden, should be sent to the Chief Information Officer, U.S. Patent and Trademark Office, U.S. Department of Commerce, P.O. Box 1450, Alexandria, VA 22313-1450. DO NOT SEND FEES OR COMPLETED FORMS TO THIS ADDRESS. SEND TO: Commissioner for Patents, P.O. Box 1450, Alexandria, VA 22313-1450.

If you need assistance in completing the form, call 1-800-PTO-9199 and select option 2.

OIPE JC46
APR 27 2005
PATENT & TRADEMARK OFFICE

IPW

IN THE UNITED STATES PATENT AND TRADEMARK OFFICE

In re Patent Application of
Ferraris et al

Serial No. 11/066,478

Filed: February 28, 2005

For: COMPOUNDS AND THEIR USES

Atty. Ref.: 2824-250

Group: 1614

Examiner: Unassigned

* * * * * * * * * * *

Commissioner for Patents
P.O. Box 1450
Alexandria, VA 22313-1450

April 27, 2005

Sir:

SUBMISSION

Submitted herewith is a Revocation of Power of Attorney with New Power of Attorney and Change of Correspondence Address and Statement Under 37 CFR 3.73(b) for the above.

Respectfully submitted,

NIXON & VANDERHYE P.C.

By: _____
B. J. Sadoff
Reg. No. 36,663

BJS:pp
1100 North Glebe Road, 8th Floor
Arlington, VA 22201-4714
Telephone: (703) 816-4000
Facsimile: (703) 816-4100

UNITED STATES PATENT AND TRADEMARK OFFICE

Commissioner for Patents
United States Patent and Trademark Office
P.O. Box 1450
Alexandria, VA 22313-1450
www.uspto.gov

AUG 04 2005

LAW OFFICES OF CALIF KIP TERVO
6387 CAMINITO LAZARO
SAN DIEGO CA 92111

In re Application of	:	
Lars Callne	:	
Serial No.: 11/066,509	:	DECISION ON PETITION
Filed: February 24, 2005	:	
For: Dental Articulator	:	

This is in response to applicants' petition filed April 15, 2005 to make the above-identified application special under the provisions of 37 CFR 1.102(c), based on the age of the applicant.

Applicant has satisfied the provisions set forth in M.P.E.P. 708.02, IV. Therefore the petition is **GRANTED**.

The application will be forwarded to the examiner for action on the merits commensurate with this decision.

Should there be any questions with regard to this letter please contact Frederick Schmidt by letter addressed to the Director, Technology Center 3700, P.O. Box 1450 Alexandria, VA 22313-1450, or by telephone at (571) 272-2975 or by facsimile transmission at (571) 273-8300.

Frederick R. Schmidt

Frederick R. Schmidt, Director
Technology Center 3700

UNITED STATES PATENT AND TRADEMARK OFFICE

Commissioner for Patents
United States Patent and Trademark Office
P.O. Box 1450
Alexandria, VA 22313-1450
www.uspto.gov

COOLEY GODWARD KRONISH LLP
ATTN: PATENT GROUP
THE BOWEN BUILDING
875 15TH STREET, N.W. SUITE 800
WASHINGTON, DC 20005-2221

COPY MAILED

OCT 23 2006

OFFICE OF PETITIONS

In re Application of	:	
MOHONEY, et al.	:	
Application No. 11/066,520	:	DECISION ON PETITION
Filed: February 25, 2005	:	TO WITHDRAW
Attorney Docket No. AE2002-026CON	:	FROM RECORD
	:	

This is a decision on the Request to Withdraw as attorney or agent under 37 C.F.R. § 1.36(b) or 37 C.F.R. § 10.40 filed June 27, 2006.

The request is **NOT APPROVED**.

A review of the file record indicates that Sean R. O'Dowd does not have power of attorney in this patent application nor is there any statement or evidence of record of employment in or otherwise being engaged in the proceedings in this patent application. Accordingly, the request to withdraw under 37 C.F.R. § 1.36(b) is not applicable.

The request to change the correspondence of record is not acceptable as the requested correspondence address is not that of: (1) the first named signing inventor; or (2) the intervening assignee of the entire interest. The change of address submitted on August 4, 2006 is also not acceptable because Larry Williams is not an attorney of record. See 37 CFR 1.33(a)(2).

All future communications from the Office will continue to be directed to the below-listed address until otherwise properly notified by the applicant.

Telephone inquires concerning this decision should be directed to Monica A. Graves at 571-272-7253.

David Bucci
Petitions Examiner
Office of Petitions

cc: **JOHN D. PIRNOT**
ADVANCED ENERGY INDUSTRIES, INC.
1625 SHARP POINT DR.
FORT COLLINS CO 80525

UNITED STATES PATENT AND TRADEMARK OFFICE

Commissioner for Patents
United States Patent and Trademark Office
P.O. Box 1450
Alexandria, VA 22313-1450
www.uspto.gov

JOHN D. PIRNOT
ADVANCED ENERGY INDUSTRIES, INC.
1625 SHARP POINT DRIVE
FORT COLLINS, CO 80525

COPY MAILED

JAN 3 1 2007

OFFICE OF PETITIONS

In re Application of
MAHONEY, et al.
Application No. 11/066,520
Filed: February 25, 2005
Attorney Docket No. AE2002-026CON

DECISION ON REQUEST FOR REVOCATION OF POWER OF ATTORNEY

This is a decision on the Request to Revoke the attorney or agent of record under 37 C.F.R. § 1.36(a), filed December 4, 2006.

The request is **APPROVED**.

A power of attorney, pursuant to § 1.32(b), may be revoked at any stage in the proceeding of a case by an applicant for patent (§ 1.41(b)) or an assignee of the entire interest of the applicant under § 3.71(b). Fewer than all of the applicants (or by fewer than the assignee of the entire interest of the applicant) may only revoke the power of attorney upon a showing of sufficient cause, and payment of the petition fee set forth § 1.17(h). For the assignee to take action a proper statement under § 3.73(b) is required.

The correspondence address of record has been changed and the new correspondence address is the address indicated below.

Telephone inquiries concerning this decision should be directed to the undersigned at (571) 272-7253.

Monica A. Graves
Petitions Examiner
Office of Petitions

cc: **LARRY WILLIAMS**
3645 MONTGOMERY DRIVE
SANTA ROSA, CA 95405-5212

UNITED STATES PATENT AND TRADEMARK OFFICE

Commissioner for Patents
United States Patent and Trademark Office
P.O. Box 1450
Alexandria, VA 22313-1450
www.uspto.gov

MAILED

APR 20 2010

OFFICE OF PETITIONS

STERNE, KESSLER, GOLDSTEIN & FOX P.L.L.C.
1100 NEW YORK AVENUE, N.W.
WASHINGTON DC 20005

In re Application of	:	
G. Ramachandra REDDY, et al	:	
Application No. 11/066,566	:	DECISION ON PETITION
Filed: February 28, 2005	:	TO WITHDRAW
Attorney Docket No. 2221.0030001/BJD/JKM	:	FROM RECORD
	:	

This is a decision on the Request to Withdraw as attorney or agent of record under 37 C.F.R. § 1.36(b), filed February 12, 2010.

The request is **NOT APPROVED because it is moot.**

A review of the file record indicates that the power of attorney to Robert W. Esmond and all the attorneys associated with Customer No. 26111, has been revoked by the assignee of the patent application on April 15, 2010. Accordingly, the request to withdraw under 37 C.F.R. § 1.36(b) is moot.

Telephone inquires concerning this decision should be directed to undersigned at 571-272- 6735.

/DCG/
Diane Goodwyn
Petitions Examiner
Office of Petitions

UNITED STATES PATENT AND TRADEMARK OFFICE

UNITED STATES DEPARTMENT OF COMMERCE
United States Patent and Trademark Office
Address: COMMISSIONER FOR PATENTS
P.O. Box 1450
Alexandria, Virginia 22313-1450
www.uspto.gov

APPLICATION NUMBER	FILING OR 371(C) DATE	FIRST NAMED APPLICANT	ATTY. DOCKET NO./TITLE
11/066,566	02/28/2005	G. Ramachandra Reddy	2221.0030001/BJD/JKM

CONFIRMATION NO. 2083

26111
STERNE, KESSLER, GOLDSTEIN & FOX P.L.L.C.
1100 NEW YORK AVENUE, N.W.
WASHINGTON, DC 20005

POWER OF ATTORNEY NOTICE

OC000000041191630

Date Mailed: 04/20/2010

NOTICE REGARDING CHANGE OF POWER OF ATTORNEY

This is in response to the Power of Attorney filed 04/15/2010.

- The Power of Attorney to you in this application has been revoked by the assignee who has intervened as provided by 37 CFR 3.71. Future correspondence will be mailed to the new address of record(37 CFR 1.33).

/dcgoodwyn/

Office of Data Management, Application Assistance Unit (571) 272-4000, or (571) 272-4200, or 1-888-786-0101

UNITED STATES PATENT AND TRADEMARK OFFICE

UNITED STATES DEPARTMENT OF COMMERCE
United States Patent and Trademark Office
Address: COMMISSIONER FOR PATENTS
PO Box 1450
Alexandria, Virginia 22313-1450
www.uspto.gov

APPLICATION NUMBER	FILING OR 371(C) DATE	FIRST NAMED APPLICANT	ATTY. DOCKET NO./TITLE
11/066,566	02/28/2005	G. Ramachandra Reddy	2221.0030001/BJD/JKM

CONFIRMATION NO. 2083

POA ACCEPTANCE LETTER

79317
JELIC PATENT SERVICES, LLC
2922 MARSHALL ST
ANN ARBOR, MI 48108

OC000000041191636

Date Mailed: 04/20/2010

NOTICE OF ACCEPTANCE OF POWER OF ATTORNEY

This is in response to the Power of Attorney filed 04/15/2010.

The Power of Attorney in this application is accepted. Correspondence in this application will be mailed to the above address as provided by 37 CFR 1.33.

/dcgoodwyn/

Office of Data Management, Application Assistance Unit (571) 272-4000, or (571) 272-4200, or 1-888-786-0101

UNITED STATES PATENT AND TRADEMARK OFFICE

Commissioner for Patents
United States Patent and Trademark Office
P.O. Box 1450
Alexandria, VA 22313-1450
www.uspto.gov

ROSSI, KIMMS & McDOWELL LLP.
P.O. BOX 826
ASHBURN, VA 20146-0826

COPY MAILED

DEC 1 5 2006

OFFICE OF PETITIONS

In re Application of	:	
Kontani et al.	:	
Application No. 11/066578	:	ON PETITION
Filing or 371(c) Date 02/25/2005	:	
Attorney Docket Number:	:	
MATS:058	:	

This is a decision on the Petition for Revival of an Application for Patent Abandoned Unintentionally Under 37 C.F.R. § 1.137(b), filed August 2, 2006 via facsimile, and August 8, 2006, via U.S. Mail.

This Petition is hereby **granted**.

The above-identified application became abandoned for failure to timely and properly reply to the Notice of Allowance and Issue Fee Due, mailed March 8, 2006. The Notice set a non-extendable three (3) month period for reply. No reply having been received, the application became abandoned on June 9, 2006. A Notice of Abandonment was mailed July 13, 2006.

Applicant has submitted the issue and publication fee with the instant petition. Accordingly, the petition is granted.

This application is being referred to Publishing Division for processing into a patent.

Telephone inquiries concerning this decision should be directed to the undersigned at (571) 272-3232.

Derek L. Woods
Attorney
Office of Petitions

UNITED STATES PATENT AND TRADEMARK OFFICE

Commissioner for Patents
United States Patent and Trademark Office
P.O. Box 1450
Alexandria, VA 22313-1450
www.uspto.gov

Heller Ehrman LLP
4350 La Jolla Village Drive, 7th Floor
San Diego, CA 92122

COPY MAILED
OCT 27 2008

In re Application of	:	
William Telfair, et al.	:	
Application No. 11/066,615	:	DECISION ON PETITION
Filed: February 24, 2005	:	TO WITHDRAW
Attorney Docket No. 14076A-002400US	:	FROM RECORD
	:	

This is a decision on the Request to Withdraw as attorney or agent of record under 37 C.F.R. § 1.36(b), filed August 22, 2008.

The request is **NOT APPROVED** because it is moot.

A review of the file record indicates that the power of attorney to Heller Ehrman LLP has been revoked by the assignee of the patent application on September 9, 2008. Accordingly, the request to withdraw under 37 C.F.R. § 1.36(b) is moot.

All future communications from the Office will continue to be directed to the below-listed address until otherwise notified by applicant.

Telephone inquires concerning this decision should be directed to Terri Williams at 571-272-2991.

Terri Williams
Petitions Examiner
Office of Petitions

cc: **Townsend and Townsend and Crew, LLP**
Two Embarcadero Center
Eighth Floor
San Francisco, CA 94111-3834

UNITED STATES PATENT AND TRADEMARK OFFICE

Commissioner for Patents
United States Patent and Trademark Office
P.O. Box 1450
Alexandria, VA 22313-1450
www.uspto.gov

Scott M. Oldham
Hahn, Loeser & Parks, LLP
One GOJO Plaza
Suite 300
Akron, OH 44311-1076

COPY MAILED

APR 2 6 2007

OFFICE OF PETITIONS

In re Application of	:	
Courtney P. Jones et al.	:	
Application No. 11/066,623	:	DECISION ON PETITION
Filed: February 25, 2005	:	TO WITHDRAW
Attorney Docket No. 200150.000019	:	FROM RECORD
	:	

This is a decision on the Request to Withdraw as attorney or agent of record under 37 C.F.R. § 1.36(b), filed December 20, 2006.

The request is **APPROVED**.

A grantable request to withdraw as attorney/agent of record must be signed by every attorney/agent seeking to withdraw or contain a clear indication that one attorney is signing on behalf of another/others. A request to withdraw will not be approved unless at least 30 (thirty) days would remain between the date of approval and the later of the expiration date of a time to file a response or the expiration date of the maximum time period which can be extended under 37 C.F.R. § 1.136(a).

The request was signed by Scott M. Oldham on behalf of all attorneys of record who are associated with customer No. 21324. All attorneys/agents associated with the Customer Number 21324 have been withdrawn.

Applicant is reminded that there is no attorney of record at this time.

The request to change the correspondence of record is not acceptable as the requested correspondence address is not that of (1) the first named signing inventor; or (2) an intervening assignee of the entire interest under 37 C.F.R. 3.71. Accordingly, all correspondence will be mailed to the first named inventor Courtney P. Jones, at the address noted in the Declaration of the application. A courtesy copy of this decision is being mailed to the correspondence addresses appearing on the request to withdraw as attorney.

A non-final rejection was mailed on October 4, 2006, but there is no indication that a reply has been filed. Therefore, if in fact no reply has been filed, then this application is now abandoned.

Telephone inquiries concerning this decision should be directed to Kimberly Inabinet at 571-272-4618.

Frances Hicks
Petitions Examiner
Office of Petitions

cc: Courtney P. Jones
826 Cal Cove Drive
Ft. Myers, FL 33919

cc: BLU Ventures, LLC
134 McGregor Blvd.
Fort Myers, FL 33919

cc: IOMEDIA Partners, LLC
5025 West Lemon Street
Tampa, FL 33609

UNITED STATES PATENT AND TRADEMARK OFFICE

UNITED STATES DEPARTMENT OF COMMERCE
United States Patent and Trademark Office
Address: COMMISSIONER FOR PATENTS
P.O. Box 1450
Alexandria, Virginia 22313-1450
www.uspto.gov

APPLICATION NUMBER	FILING OR 371 (c) DATE	FIRST NAMED APPLICANT	ATTY. DOCKET NO./TITLE
11/066,623	02/25/2005	Courtney P. Jones	200150.00019

CONFIRMATION NO. 9187

OC000000023540976

21324
HAHN LOESER & PARKS, LLP
One GOJO Plaza
Suite 300
AKRON, OH 44311-1076

Date Mailed: 04/25/2007

NOTICE REGARDING CHANGE OF POWER OF ATTORNEY

This is in response to the Power of Attorney filed 12/20/2006.

- The withdrawal as attorney in this application has been accepted. Future correspondence will be mailed to the new address of record. 37 CFR 1.33.

Kimberly Brabinet
Office of Initial Patent Examination (571) 272-4000, or 1-800-PTO-9199
FORMER ATTORNEY/AGENT COPY

UNITED STATES PATENT AND TRADEMARK OFFICE

Commissioner for Patents
United States Patent and Trademark Office
P.O. Box 1450
Alexandria, VA 22313-1450
www.uspto.gov

JUL 25 2005

SLATER & MATSIL, L.L.P.
17950 PRESTON ROAD, SUITE 1000
DALLAS, TX 75252-5793

In re application of Alton B. Hamm Application No. 11/066,634 Filed: February 25, 2005 For: VEHICLE STABILITY CONTROL SYSTEM	: : : :	**DECISION ON PETITION TO MAKE SPECIAL (APPLICANT'S AGE)**

This is a decision on the petition submitted on February 25, 2005 under 37 CFR 1.102 (c) to make the above-identified application special under the accelerated examination procedure set forth in MPEP 708.02, Section IV: Applicant's Age.

The petition is **GRANTED**.

An application may be accorded special status upon the filing of a petition providing evidence showing that the applicant is at least 65 years old. Such a showing may be provided by evidence such as a birth certificate or a statement from the applicant.

The evidence submitted with the petition is a declaration signed by Alton B. Hamm indicating that he is at least 65 years of age.

The examiner is directed (1) to make an interference search for possible interfering applications, (2) to promptly examine this application out of turn, and (3) if any interfering application is discovered, to examine such application simultaneously and state in the first official letter of such application that it is being taken out of turn because of a possible interference.

Petitioner is advised that this application will continue to be special, throughout its entire prosecution and pendency, including interference or appeal, if any, only if petitioner makes a prompt ***bona fide*** effort, in response to each Office action, to place the application in condition for allowance, even if it is necessary to conduct an interview with the examiner to accomplish this purpose.

SUMMARY: Petition to Make Special **GRANTED**.

Randolph A. Reese
Special Programs Examiner
Technology Center 3600
(571) 272-6619

RAR/dcg: 7/6/05

UNITED STATES PATENT AND TRADEMARK OFFICE

UNITED STATES DEPARTMENT OF COMMERCE
United States Patent and Trademark Office
Address: COMMISSIONER FOR PATENTS
P.O. Box 1450
Alexandria, Virginia 22313-1450
www.uspto.gov

STOEL RIVES LLP - SLC
201 SOUTH MAIN STREET, SUITE 1100
ONE UTAH CENTER
SALT LAKE CITY, UT 84111

Mail Date: 04/21/2010

Applicant	: Rod Gilchrist	: DECISION ON REQUEST FOR
Patent Number	: 7613923	: RECALCULATION of PATENT
Issue Date	: 11/03/2009	: TERM ADJUSTMENT IN VIEW
Appliction No	: 11/066,660	: OF WYETH AND NOTICE OF INTENT TO
Filed	: 02/25/2005	: ISSUE CERTIFICATE OF CORRECTION
		:

The Request for Recalculation is **GRANTED** to the extent indicated.

The patent term adjustment has been determined to be **1110** days. The USPTO will *sua sponte* issue a certificate of correction reflecting the amount of PTA days determined by the recalculation.

Prior to the issuance of the certificate of correction, the USPTO will afford patentee an opportunity to be heard and request reconsideration. Accordingly, patentee has **one month or thirty (30) days**, whichever is longer, to file a request for reconsideration of this patent term adjustment calculation. See 35 U.S.C. 154(b)(3)(B)(ii) and 37 CFR 1.322(a)(4). No extensions of time will be granted under 37 CFR 1.136.

Patentee should use document code PET.OP if electronically filing a request for reconsideration of this patent term adjustment calculation. The patentee must also include the information required by 37 CFR 1.705(b)(2) and the fee required by 37 CFR 1.18(e). If patentee does not file a timely request for reconsideration of this patent term adjustment calculation including the information required by 37 CFR 1.705(b)(2) and the fee required by 37 CFR 1.18(e), the USPTO will issue a certificate of correction reflecting the PTA determination noted above.

Patentee should be aware that in order to preserve the right to review in the United States District Court for the District of Columbia of the USPTO patent term adjustment determination, patentee must ensure that he or she also take the steps required under 35 U.S.C. 154(b)(4)(A) in a timely manner. Nothing in the request for recalculation should be construed as providing an alternative time frame for commencing a civil action under 35 U.S.C. 154(b)(4)(A).

Any questions concerning this decision should be directed to the Office of Patent Legal Administration at 571-272-7702.

UNITED STATES PATENT AND TRADEMARK OFFICE

COMMISSIONER FOR PATENTS
UNITED STATES PATENT AND TRADEMARK OFFICE
P.O. BOX 1450
ALEXANDRIA, VA 22313-1450
www.uspto.gov

KEELING PATENTS AND TRADEMARKS
3310 KATY FREEWAY, SUITE 100
HOUSTON, TX 77007

COPY MAILED

DEC 26 2007

OFFICE OF PETITIONS

In re Patent No. 7,252,163 :
Issue Date: August 7, 2007 :
Application No. 11/066,691 : NOTICE
Filed: February 25, 2005 :
Patentee(s): Andrew Ollerensaw, et. al. :

This is a notice regarding a communication for acceptance of a fee deficiency submission under 37 CFR 1.28 filed on September 13, 2007. On September 1, 1998, the Court of Appeals for the Federal Circuit held that 37 CFR 1.28(c) is the sole provision governing the time for correction of the erroneous payment of the issue fee as a small entity. **See DH Technology v. Synergystex International, Inc. 154 F.3d 1333, 47 USPQ2d 1865 (Fed. Cir. Sept. 1, 1998).**

The Office no longer investigates or rejects original or reissue applications under 37 CFR 1.56. **1098 Off. Gaz. Pat. Office 502 (January 3, 1989).** Therefore, nothing in this Notice is intended to imply that an investigation was done.

There is no indication that the person signing the instant request was ever given a power of attorney or authorization of agent to prosecute the above-identified patent. However, in accordance with 37 CFR 1.34(a), the signature appearing on the petition shall constitute a representation to the United States Patent and Trademark Office that he/she is authorized to represent the particular party in whose behalf he/she acts.

Your fee deficiency submission under 37 CFR 1.28 is hereby **ACCEPTED**. Therefore, status as a small entity has been removed and all future fees paid must be paid at the large entity rate.

Inquiries related to this communication should be directed to the undersigned at (571) 272-3226.

Andrea Smith
Petitions Examiner
Office of Petitions

UNITED STATES PATENT AND TRADEMARK OFFICE

Commissioner for Patents
United States Patent and Trademark Office
P.O. Box 1450
Alexandria, VA 22313-1450
www.uspto.gov

COPY MAILED
DEC 0 1 2006
OFFICE OF PETITIONS

MORRISON & FOERSTER LLP
425 MARKET STREET
SAN FRANCISCO, CA 94105-2482

In re Application of	:	
BRIDON, et al.	:	
Application No. 11/066,697	:	DECISION ON PETITION
Filed: February 25, 2005	:	TO WITHDRAW
Attorney Docket No. 11767-024-999	:	FROM RECORD
	:	

This is a decision on the Request to Withdraw as attorney or agent of record under 37 C.F.R. § 1.36(b), filed October 25, 2006.

The request is **NOT APPROVED** as moot.

A review of the file record indicates that the power of attorney to MORRISON & FOERSTER LLP has been revoked by the assignee of the patent application on October 26, 2006. Accordingly, the request to withdraw under 37 C.F.R. § 1.36(b) is moot.

All future communications from the Office will continue to be directed to the address indicated below until otherwise notified by applicant.

Telephone inquires concerning this decision should be directed to Patricia Volpe at 571-272- 6825.

Patricia Volpe
Petitions Examiner
Office of Petitions

cc: **JONES DAY**
222 EAST 41ST ST
NEW YORK NY 10017

UNITED STATES PATENT AND TRADEMARK OFFICE

UNITED STATES DEPARTMENT OF COMMERCE
United States Patent and Trademark Office
Address: COMMISSIONER FOR PATENTS
P.O. Box 1450
Alexandria, Virginia 22313-1450
www.uspto.gov

APPLICATION NUMBER	FILING OR 371 (c) DATE	FIRST NAMED APPLICANT	ATTY. DOCKET NO./TITLE
11/066,697	02/25/2005	Dominique P. Bridon	500862002301

CONFIRMATION NO. 9234

OC000000021426768

20872
MORRISON & FOERSTER LLP
425 MARKET STREET
SAN FRANCISCO, CA 94105-2482

Date Mailed: 11/30/2006

NOTICE REGARDING CHANGE OF POWER OF ATTORNEY

This is in response to the Power of Attorney filed 10/26/2006.

- The Power of Attorney to you in this application has been revoked by the assignee who has intervened as provided by 37 CFR 3.71. Future correspondence will be mailed to the new address of record(37 CFR 1.33).

PVolpe

PATRICIA A VOLPE
OP (571) 272-6825

FORMER ATTORNEY/AGENT COPY

UNITED STATES PATENT AND TRADEMARK OFFICE

UNITED STATES DEPARTMENT OF COMMERCE
United States Patent and Trademark Office
Address: COMMISSIONER FOR PATENTS
P.O. Box 1450
Alexandria, Virginia 22313-1450
www.uspto.gov

PERKINS COIE LLP/MSFT
P. O. BOX 1247
SEATTLE, WA 98111-1247

Mail Date: 04/20/2010

Applicant	: Jonathan J. Cadiz	: DECISION ON REQUEST FOR
Patent Number	: 7620166	: RECALCULATION of PATENT
Issue Date	: 11/17/2009	: TERM ADJUSTMENT IN VIEW
Appliction No	: 11/066,716	: OF WYETH AND NOTICE OF INTENT TO
Filed	: 02/25/2005	: ISSUE CERTIFICATE OF CORRECTION
		:

The Request for Recalculation is **GRANTED** to the extent indicated.

The patent term adjustment has been determined to be **1181** days. The USPTO will *sua sponte* issue a certificate of correction reflecting the amount of PTA days determined by the recalculation.

Prior to the issuance of the certificate of correction, the USPTO will afford patentee an opportunity to be heard and request reconsideration. Accordingly, patentee has **one month or thirty (30) days**, whichever is longer, to file a request for reconsideration of this patent term adjustment calculation. See 35 U.S.C. 154(b)(3)(B)(ii) and 37 CFR 1.322(a)(4). No extensions of time will be granted under 37 CFR 1.136.

Patentee should use document code PET.OP if electronically filing a request for reconsideration of this patent term adjustment calculation. The patentee must also include the information required by 37 CFR 1.705(b)(2) and the fee required by 37 CFR 1.18(e). If patentee does not file a timely request for reconsideration of this patent term adjustment calculation including the information required by 37 CFR 1.705(b)(2) and the fee required by 37 CFR 1.18(e), the USPTO will issue a certificate of correction reflecting the PTA determination noted above.

Patentee should be aware that in order to preserve the right to review in the United States District Court for the District of Columbia of the USPTO patent term adjustment determination, patentee must ensure that he or she also take the steps required under 35 U.S.C. 154(b)(4)(A) in a timely manner. Nothing in the request for recalculation should be construed as providing an alternative time frame for commencing a civil action under 35 U.S.C. 154(b)(4)(A).

Any questions concerning this decision should be directed to the Office of Patent Legal Administration at 571-272-7702.

UNITED STATES PATENT AND TRADEMARK OFFICE

COMMISSIONER FOR PATENTS
UNITED STATES PATENT AND TRADEMARK OFFICE
P.O. BOX 1450
ALEXANDRIA, VA 22313-1450
www.uspto.gov

PERKINS COIE LLP/MSFT
P. O. BOX 1247
SEATTLE WA 98111-1247

MAILED

FEB 11 2009

OFFICE OF PETITIONS

In re Application of	:	
Curtis et al.	:	
Application No. 11/066,719	:	ON APPLICATION FOR
Filed: 02/25/2005	:	PATENT TERM ADJUSTMENT
Atty Docket No. 418268167US	:	

This is in response to the "APPLICATION FOR PATENT TERM ADJUSTMENT RECONSIDERATION UNDER 37 C.F.R. §1.705(B)" filed December 30, 2008. Applicant requests that the determination of patent term adjustment be increased by 463 days to 1016 days assuming the patent issues on June 2, 2009. Applicant requests this correction on the basis that the Office will take in excess of three years to issue this patent and in light of the recent court decision in Wyeth v. Dudas, No. 07-1492 (D.D.C. September 30, 2008).

As the instant application for patent term adjustment requests reconsideration of the patent term adjustment as it relates to the Office's failure to issue the patent within three years of the filing date, a decision is being **held in abeyance** until after the actual patent date. Knowledge of the actual date the patent issues is required to calculate the amount, if any, of additional patent term patentee is entitled to for Office failure to issue the patent within three years. See 37 CFR 1.703(b).

Applicant is given **TWO (2) MONTHS** from the issue date of the patent to file a written request for reconsideration of the patent term adjustment for Office failure to issue the patent within three years. A copy of this decision should accompany

the request. Applicant may seek such consideration without payment of an additional fee. However, as to all other bases for seeking reconsideration of the patent term adjustment indicated in the patent, all requirements of 37 CFR 1.705(d) must be met. Requests for reconsideration on other bases must be timely filed and must include payment of the required fee.

Rather than file the request for reconsideration of Patent Term Adjustment at the time of the mailing of the notice of allowance, applicant is advised that they may wait until the time of the issuance of the patent and file a request for reconsideration of the patent term pursuant to 37 CFR 1.705(d). The USPTO notes that it does not calculate the amount of time earned pursuant to 37 CFR 1.702(b) until the time of the issuance of the patent and accordingly, the Office will consider any request for reconsideration of the patent term adjustment due to an error in the calculation of 37 CFR 1.702(b) to be timely if the request for reconsideration is filed within two months of the issuance of the patent.

The Office acknowledges submission of the $200.00 fee set forth in 37 CFR 1.18(e). No additional fees are required.

The application is being forwarded to the Office of Data Management for issuance of the patent. The patent term adjustment indicated on the patent (as shown on the Issue Notification mailed about three weeks prior to patent issuance) will include any additional adjustment accrued both for Office delay in issuing the patent more than four months after payment of the issue fee and satisfaction of all outstanding requirements, and for the Office taking in excess of three years to issue the patent (to the extent that the three-year period does not overlap with periods already accorded).

Telephone inquiries specific to this decision should be directed to Senior Petitions Attorney, Christina Tartera Donnell, at (571) 272-3211.

Kery A. Fries

Kery A. Fries
Senior Legal Advisor
Office Patent Legal Administration

UNITED STATES PATENT AND TRADEMARK OFFICE

Commissioner for Patents
United States Patent and Trademark Office
P.O. Box 1450
Alexandria, VA 22313-1450
www.uspto.gov

KLARQUIST SPARKMAN, LLP
121 SW SALMON STREET, SUITE 1600
PORTLAND, OR 97204

COPY MAILED

MAR 19 2008

OFFICE OF PETITIONS

In re Application of :
Todd P. Beach et al :
Application No. 11/066,720 : ON PETITION
Filed: February 23, 2005 :
Attorney Docket No. 7180-69626-06

This is a decision on the petition, filed March 14, 2008 under 37 CFR 1.313(c)(2) to withdraw the above-identified application from issue after payment of the issue fee.

The petition is **GRANTED**.

The above-identified application is withdrawn from issue for consideration of a submission under 37 CFR 1.114 (request for continued examination). See 37 CFR 1.313(c)(2).

Petitioner is advised that the issue fee paid on February 11, 2008 in the above-identified application cannot be refunded. If, however, the above-identified application is again allowed, petitioner may request that it be applied towards the issue fee required by the new Notice of Allowance.[1]

Telephone inquiries should be directed to Irvin Dingle at (571) 272-3210.

This matter is being referred to Technology Center AU 3711 for processing of the request for continued examination under 37 CFR 1.114 and for consideration of the concurrently filed Information Disclosure Statement.

Irvin Dingle
Petitions Examiner
Office of Petitions

[1] The request to apply the issue fee to the new Notice may be satisfied by completing and returning the new Issue Fee Transmittal Form PTOL-85(b), which includes the following language thereon: Commissioner for Patents is requested to apply the Issue Fee and Publication Fee (if any) or re-apply any previously paid issue fee to the application identified above. Petitioner is advised that, whether a fee is indicated as being due or not, the Issue Fee Transmittal Form **must** be completed and timely submitted to avoid abandonment. Note the language in bold text on the first page of the Notice of Allowance and Fee(s) Due (PTOL-85).

UNITED STATES PATENT AND TRADEMARK OFFICE

UNITED STATES DEPARTMENT OF COMMERCE
United States Patent and Trademark Office
Address: COMMISSIONER FOR PATENTS
P.O. Box 1450
Alexandria, Virginia 22313-1450
www.uspto.gov

APPLICATION NO.	FILING DATE	FIRST NAMED INVENTOR	ATTORNEY DOCKET NO.	CONFIRMATION NO.
11/066,740	02/23/2005	Holger Werner Justi	3712036-00605	8904

29157 7590 12/16/2009
K&L Gates LLP
P.O. Box 1135
CHICAGO, IL 60690

EXAMINER
GWARTNEY, ELIZABETH A

ART UNIT	PAPER NUMBER
1794	

NOTIFICATION DATE	DELIVERY MODE
12/16/2009	ELECTRONIC

Please find below and/or attached an Office communication concerning this application or proceeding.

The time period for reply, if any, is set in the attached communication.

Notice of the Office communication was sent electronically on above-indicated "Notification Date" to the following e-mail address(es):

chicago.patents@klgates.com

Commissioner for Patents
United States Patent and Trademark Office
P.O. Box 1450
Alexandria, VA 22313-1450
www.uspto.gov

wk

Mailed: 12/16/09

In re application of Justi et al. Serial No. 11/066,740 Filed: February 23, 2005 For: Biscuit For Frozen Confectionery	:	DECISION ON PETITION

This is a response to Applicants Petition For Withdrawal From Appeal filed October 13, 2009.

Applicants filed a Notice of Appeal on November 10, 2008. Applicants request that the application be withdrawn from appeal in view of filing a continuation application.

DECISION

The Petition is **GRANTED**.

/JACQUELINE STONE/

Jacqueline M. Stone, Director
Technology Center 1700
Chemical and Materials Engineering

Robert M. Barrett
K&L Gates LLP
P.O. Box 1135
CHICAGO IL 60690

UNITED STATES PATENT AND TRADEMARK OFFICE

COMMISSIONER FOR PATENTS
UNITED STATES PATENT AND TRADEMARK OFFICE
P.O. BOX 1450
ALEXANDRIA, VA 22313-1450
www.uspto.gov

MAIL

APR 26 2005

DIRECTOR OFFICE
TECHNOLOGY CENTER 2600

Everett D. Robinson
Parsons Behle & Latimer
Suite 1800
201 South Main Street
Salt Lake City UT 84111

In re Application of :

DENGLER, CHRISTOPHER A. :
Application No. 11/066,754 : DECISION ON PETITION
Filed: February 25, 2005 : TO MAKE SPECIAL
For: **METHOD FOR SEARCHING FOR AND TRANSMITTING SONGS WITH ACCOMPANYING LISTENER MESSAGES** :

This is a decision on the petition filed February 25, 2005, under 37 CFR §1.102(d) to make the application special and treated as pursuant to MPEP §708.02, section II (Infringement).

A grantable petition under 37 CFR §1.102(d) and MPEP §708.02, section II (Infringement), must be accompanied by the required fee and a statement alleging:

(1) that there is an infringing device or product actually on the market or method in use;
(2) that a rigid comparison of the alleged infringing device, product, or method with the claims of the application has been made, and that, in his or her opinion, some of the claims are unquestionably infringed; and
(3) that he or she has made or caused to be made a careful and thorough search of the prior art or has a good knowledge of the pertinent prior art. Further, Applicant must provide a copy of each of the references deemed most closely related to the subject matter encompassed by the claims if the references are not already of record.

The petitioner meets all the above-listed requirements. Accordingly, the petition is **GRANTED**.

The application will retain its special status throughout its entire prosecution, including any appeal to the Board of Patent Appeals and Interferences, subject only to diligent prosecution by the applicant.

The application is being forwarded to the examiner for expedited prosecution.

Kenneth A. Wieder
Special Program Examiner
Technology Center 2600
Communications

UNITED STATES PATENT AND TRADEMARK OFFICE

Commissioner for Patents
United States Patent and Trademark Office
P.O. Box 1450
Alexandria, VA 22313-1450
www.uspto.gov

F. CHAU & ASSOCIATES, LLC
130 WOODBURY ROAD
WOODBURY NY 11797

COPY MAILED

JUN 08 2007

OFFICE OF PETITIONS

In re Application of :
Jang-Kun Song :
Application No. 11/066,764 :
Filed: February 28, 2005 :
Attorney Docket No. 8071-171T (OPP050358US) :

ON PETITION

This is a decision on the petition, filed June 4, 2007, under 37 CFR 1.313(c)(2) to withdraw the above-identified application from issue after payment of the issue fee.

The petition is **GRANTED.**

The above-identified application is withdrawn from issue for consideration of a submission under 37 CFR 1.114 (request for continued examination). See 37 CFR 1.313(c)(2).

Petitioner is advised that the issue fee paid on May 21, 2007 in the above-identified application cannot be refunded. If, however, the above-identified application is again allowed, petitioner may request that it be applied towards the issue fee required by the new Notice of Allowance.[1]

Telephone inquiries should be directed to the undersigned at (571) 272-3208.

The examiner of Technology Center AU 2815 will consider the request for continued examination under 37 CFR 1.114.

Karen Creasy

Karen Creasy
Petitions Examiner
Office of Petitions

---

[1] The request to apply the issue fee to the new Notice may be satisfied by completing and returning the new Issue Fee Transmittal Form PTOL-85(b), which includes the following language thereon: "Commissioner for Patents is requested to apply the Issue Fee and Publication Fee (if any) or re-apply any previously paid issue fee to the application identified above." Petitioner is advised that, whether a fee is indicated as being due or not, the Issue Fee Transmittal Form **must** be completed and timely submitted to avoid abandonment. Note the language in bold text on the first page of the Notice of Allowance and Fee(s) Due (PTOL-85).

UNITED STATES PATENT AND TRADEMARK OFFICE

Commissioner for Patents
United States Patent and Trademark Office
P.O. Box 1450
Alexandria, VA 22313-1450
www.uspto.gov

GLENN PATENT GROUP
3475 EDISON WAY, SUITE L
MENLO PARK CA 94025

COPY MAILED

JUL 21 2005

OFFICE OF PETITIONS

In re Application of
Anderson Huang et al.
Application No. 11/066,769
Filed: February 25, 2005
Attorney Docket No. TSAI0023

: DECISION REFUSING STATUS
: UNDER 37 CFR 1.47(b)

This decision is in response to the petition filed May 23, 2005, under 37 CFR 1.47(b), in response to the Notice to File Missing Parts "Notice" mailed March 23, 2005.

The petition is **DISMISSED.**

Rule 47 applicant is given TWO MONTHS from the mailing date of this decision to respond, correcting the below-noted deficiencies. Any response should be entitled "Request for Reconsideration of Petition Under 37 CFR 1.47(a)" and may include an oath or declaration executed by the inventor. **Failure to respond will result in abandonment of the application.** Any extensions of time will be governed by 37 CFR 1.136(a).

The above-identified application, naming Anderson Huang and Mike Lee as joint inventors, was filed on February 25, 2005 without an executed oath or declaration. Accordingly, on March 23, 2005 , a "Notice To File Missing Parts of Nonprovisional Application" was mailed, requiring, an executed oath or declaration and a surcharge for its late filing. In response, the present petition was filed.

A grantable petition under 37 CFR 1.47(b) requires:

(1) proof that the non-signing inventor cannot be reached or refuses to sign the oath or declaration after having been presented with the application papers (specification, claims and drawings);

(2) an acceptable oath or declaration in compliance with 35 U.S.C. §§ 115 and 116;

(3) the petition fee;

(4) a statement of the last known address of the non-signing inventor;

(5) proof of proprietary interest, and

(6) proof of irreparable damage.

The petition lacks items (2) and (5).

As to item (2), an oath or declaration for the patent application in compliance with 37 CFR 1.63 and 1.64 has not been presented. A declaration in compliance with 37 CFR 1.63, 1.64, and 1.67 must be presented, signed by all of the signing inventors, if any. If

no inventor(s) will sign the declaration, the declaration may be signed on behalf of the inventor by an assignee or the oath or declaration must be signed by an officer of the corporation (president, vice president, secretary, or treasurer) on behalf of and as agent for the non-signing inventor(s). The officer must identify his/her title in the declaration, as well as his/her mailing address, residence, if the applicant lives at a different location from where he or she customarily receives mail, as well as the citizenship of individual signing on behalf of the non-signing inventor. If the oath or declaration is not signed by an officer of the corporation, then proof of authority of the person signing on behalf of the corporation must be submitted.[1]

As to item (5), petitioner must provide proof that the Rule 1.47(b) applicant has sufficient proprietary interest in the subject matter to justify the filing of the application.[2] Petitioners should provide a copy of the employment agreement between the non-signing inventor and the Rule 1.47(b) applicant (company); a copy of an assignment agreement showing that the invention disclosed in the application is assigned to the Rule 1.47(b) applicant; or a legal memorandum signed by an attorney familiar with the law of the jurisdiction stating that a court of competent jurisdiction would by the weight of authority in that jurisdiction award the title of the invention to the Rule 1.47(b) applicant.

The petition fee in the amount of $200.00 has been charged to deposit account no. 07-1445 as per the authorization included in the petition.

Further correspondence with respect to this matter should be addressed as follows:

By mail: Mail Stop Petition
Commissioner for Patents
P.O. Box 1450
Alexandria, VA 22313-1450

By FAX: (571) 273-8300

Telephone inquiries concerning this matter may be directed to the undersigned Petitions Attorney at (571) 272-3212.

Patricia Faison-Ball

Patricia Faison-Ball
Senior Petitions Attorney
Office of Petitions

---

[1] MPEP 409.03(b).

[2] MPEP 409.03(f).

UNITED STATES PATENT AND TRADEMARK OFFICE

Commissioner for Patents
United States Patent and Trademark Office
P.O. Box 1450
Alexandria, VA 22313-1450
www.uspto.gov

GLENN PATENT GROUP
3475 EDISON WAY, SUITE L
MENLO PARK CA 94025

COPY MAILED

OCT 0 6 2005

OFFICE OF PETITIONS

In re Application of
Anderson Huang et al.
Application No. 11/066,769
Filed: February 25, 2005
Attorney Docket No. TSAI0023

: DECISION REFUSING STATUS
: UNDER 37 CFR 1.47(b)

This decision is in response to the request for reconsideration filed September 22, 2005, under 37 CFR 1.47(b).

The petition is **GRANTED**.

The above-identified application, naming Anderson Huang and Mike Lee as joint inventors, was filed on February 25, 2005 without an executed oath or declaration. Accordingly, on March 23, 2005 , a "Notice To File Missing Parts of Nonprovisional Application" was mailed, requiring, an executed oath or declaration and a surcharge for its late filing. In response, a petition was filed on May 23, 2005 and dismissed in a decision mailed July 21, 2005 because the petition lacked a properly executed oath or declaration and because the applicant had not provided proof of proprietary interest.

A grantable petition under 37 CFR 1.47(b) requires:

(1) proof that the non-signing inventor cannot be reached or refuses to sign the oath or declaration after having been presented with the application papers (specification, claims and drawings);

(2) an acceptable oath or declaration in compliance with 35 U.S.C. §§ 115 and 116;

(3) the petition fee;

(4) a statement of the last known address of the non-signing inventor;

(5) proof of proprietary interest, and

(6) proof of irreparable damage.

In response to the decision dismissing the petition filed November 22, 2004, an oath or declaration executed by the Deputy Manager of the Legal Division, Steven Hung, for the assignee and on behalf of the non-signing inventor has been presented. Additionally, Mr. Hung indicates his authority to so sign on behalf of the assignee.

As to the requirement for proof of proprietary interest, the applicant submits a copy of a

translated non-disclosure agreement executed by the non-signing inventors and the company, in consideration of employment.

All requirements under 37 CFR 1.47(b) therefore having been met, as provided in Rule 1.47(c), this Office will forward notice of this application's filing to the non-signing inventor at the address given in the petition. Notice of the filing of this application will also be published in the Official Gazette.

This matter is being referred to Technology Center 2819 for examination in due course.

Telephone inquiries related to this decision should be directed to the undersigned Petitions Attorney at (571) 272-3212.

Patricia Faison-Ball

Patricia Faison-Ball
Senior Petitions Attorney
Office of Petitions

UNITED STATES PATENT AND TRADEMARK OFFICE

Commissioner for Patents
United States Patent and Trademark Office
P.O. Box 1450
Alexandria, VA 22313-1450
www.uspto.gov

ANDERSON HUANG
N2F-2, NO.1, LANE 144, SEC 2
NANYA S. ROAD
BANCIAO CITY, TAIPEI COUNTY 220
TAIWAN, R.O.C.

MIKE LEE
10F-5, NO. 689
JHONGJHENG ROAD
JHONGE CITY, TAIPEI COUNTY 235
TAIWAN, R.O.C.

COPY MAILED

OCT 0 6 2005

OFFICE OF PETITIONS

In re Application of
Anderson Huang et al.
Application No. 11/066,769
Filed: February 25, 2005
For: APPARATUS AND METHOD FOR INPUTTING KEY SIGNALS TO OPTICAL DISK PLAYER USING ANALOG SIGNAL

Dear Mr. Huang and Mr. Lee:

You are named as joint inventors in the above identified United States patent application, filed under the provisions of 35 U.S.C. 116 (United States Code), and 37 CFR 1.47(a), Rules of Practice in Patent Cases. Should a patent be granted on the application you will be designated therein as joint inventors.

As named inventors you are entitled to inspect any paper in the file wrapper of the application, order copies of all or any part thereof (at a prepaid cost per 37 CFR 1.19) or make your position of record in the application. Alternatively, you may arrange to do any of the preceding through a registered patent attorney or agent presenting written authorization from you. If you care to join the application, counsel of record (see below) would presumably assist you. Joining in the application would entail the filing of an appropriate oath or declaration by you pursuant to 37 CFR 1.63.

Telephone inquiries regarding this communication should be directed to the undersigned Petitions Attorney at (571) 272-3212. Requests for information regarding your application should be directed to the File Information Unit at 703/308-2733. Information regarding how to pay for and order a copy of the application, or a specific paper in the application, should be directed to Certification Division at 703/308-9726 or 1-800-972-6382 (outside the Washington D.C. area).

Patricia Faison-Ball

Patricia Faison-Ball
Senior Petitions Attorney
Office of Petitions

cc:
GLENN PATENT GROUP
3475 EDISON WAY, SUITE L
MENLO PARK CA 94025

UNITED STATES PATENT AND TRADEMARK OFFICE

COMMISSIONER FOR PATENTS
UNITED STATES PATENT AND TRADEMARK OFFICE
P.O. BOX 1450
ALEXANDRIA, VA 22313-1450
www.uspto.gov

MORRISON & FOERSTER, LLP
755 PAGE MILL RD
PALO ALTO, CA 94304-1018

COPY MAILED

JUN 23 2008

OFFICE OF PETITIONS

In re Application of	:	
Eric Y. Wang, et. al.	:	
Application No. 11/066,786	:	DECISION ON PETITION
Filed: February 25, 2005	:	
Attorney Docket No. 252312008200	:	

This is a decision on the petition under 37 CFR 1.182 filed on November 16, 2005 and October 9, 2007, to change the order of the names of the inventors.

It is not apparent whether the person signing the instant petition was ever given a power of attorney or authorization of agent to prosecute the above-identified application. However, in accordance with 37 CFR 1.34(a), the signature of Robert K. Cerpa appearing on the petition shall constitute a representation to the United States Patent and Trademark Office that he is authorized to represent the particular party in whose behalf he acts.

The petition is **granted**.

The order of the names of the inventors will be changed as follows:

1. Eric Y. Wang
2. Luisa M. Salter-CID
3. Mary T. MacDonald
4. Jingjing Zhao

Office records have been corrected to reflect the change in the order of the named inventors. A corrected Filing Receipt, which sets forth the desired order of the named inventors, accompanies this decision on petition.

Finance records show that petitioner submitted a $130 petition fee on November 16, 2005 and again on October 9, 2007 for treatment of the instant petition. However, a petition under 37 CFR 1.182 requires a petition fee of $400. Therefore, the balance of $140 (400-260) has been charged to petitioner's deposit account, as authorized.

This application is being referred to Technology Center Art Unit 1621, for consideration of the response to the Restriction/Election Requirement filed on July 3, 2007.

Telephone inquiries regarding this decision should be directed to the undersigned at (571) 272-3226.

Andrea Smith
Petitions Examiner
Office of Petitions

ATTACHMENT: Corrected Filing Receipt

UNITED STATES PATENT AND TRADEMARK OFFICE

UNITED STATES DEPARTMENT OF COMMERCE
United States Patent and Trademark Office
Address: COMMISSIONER FOR PATENTS
P.O. Box 1450
Alexandria, Virginia 22313-1450
www.uspto.gov

APPLICATION NUMBER	FILING or 371(c) DATE	GRP ART UNIT	FIL FEE REC'D	ATTY.DOCKET.NO	TOT CLAIMS	IND CLAIMS
11/066,786	02/25/2005	1621	2415	252312008200	49	10

CONFIRMATION NO. 6768

CORRECTED FILING RECEIPT

25226
MORRISON & FOERSTER LLP
755 PAGE MILL RD
PALO ALTO, CA 94304-1018

OC000000026571247

Date Mailed: 06/20/2008

Receipt is acknowledged of this non-provisional patent application. The application will be taken up for examination in due course. Applicant will be notified as to the results of the examination. Any correspondence concerning the application must include the following identification information: the U.S. APPLICATION NUMBER, FILING DATE, NAME OF APPLICANT, and TITLE OF INVENTION. Fees transmitted by check or draft are subject to collection. Please verify the accuracy of the data presented on this receipt. **If an error is noted on this Filing Receipt, please submit a written request for a Filing Receipt Correction. Please provide a copy of this Filing Receipt with the changes noted thereon. If you received a "Notice to File Missing Parts" for this application, please submit any corrections to this Filing Receipt with your reply to the Notice. When the USPTO processes the reply to the Notice, the USPTO will generate another Filing Receipt incorporating the requested corrections**

Applicant(s)

Eric Y. Wang, San Diego, CA;
Luisa M. Salter-Cid, San Diego, CA;
Mary T. MacDonald, San Diego, CA;
Jingjing Zhao, San Diego, CA;

Power of Attorney: None

Domestic Priority data as claimed by applicant

This appln claims benefit of 60/547,997 02/25/2004
and claims benefit of 60/569,017 05/06/2004
and claims benefit of 60/601,221 08/13/2004
and claims benefit of 60/619,159 10/15/2004

Foreign Applications

If Required, Foreign Filing License Granted: 03/23/2005

The country code and number of your priority application, to be used for filing abroad under the Paris Convention, is **US 11/066,786**

Projected Publication Date: Not Applicable

Non-Publication Request: No

Early Publication Request: No
**** SMALL ENTITY ****

Title

Amine-based and amide-based inhibitors of semicarbazide-sensitive amine oxidase (SSAO) enzyne activity and VAP-1 mediated adhesion useful for treatment of diseases

Preliminary Class

564

PROTECTING YOUR INVENTION OUTSIDE THE UNITED STATES

Since the rights granted by a U.S. patent extend only throughout the territory of the United States and have no effect in a foreign country, an inventor who wishes patent protection in another country must apply for a patent in a specific country or in regional patent offices. Applicants may wish to consider the filing of an international application under the Patent Cooperation Treaty (PCT). An international (PCT) application generally has the same effect as a regular national patent application in each PCT-member country. The PCT process **simplifies** the filing of patent applications on the same invention in member countries, but **does not result** in a grant of "an international patent" and does not eliminate the need of applicants to file additional documents and fees in countries where patent protection is desired.

Almost every country has its own patent law, and a person desiring a patent in a particular country must make an application for patent in that country in accordance with its particular laws. Since the laws of many countries differ in various respects from the patent law of the United States, applicants are advised to seek guidance from specific foreign countries to ensure that patent rights are not lost prematurely.

Applicants also are advised that in the case of inventions made in the United States, the Director of the USPTO must issue a license before applicants can apply for a patent in a foreign country. The filing of a U.S. patent application serves as a request for a foreign filing license. The application's filing receipt contains further information and guidance as to the status of applicant's license for foreign filing.

Applicants may wish to consult the USPTO booklet, "General Information Concerning Patents" (specifically, the section entitled "Treaties and Foreign Patents") for more information on timeframes and deadlines for filing foreign patent applications. The guide is available either by contacting the USPTO Contact Center at 800-786-9199, or it can be viewed on the USPTO website at http://www.uspto.gov/web/offices/pac/doc/general/index.html.

For information on preventing theft of your intellectual property (patents, trademarks and copyrights), you may wish to consult the U.S. Government website, http://www.stopfakes.gov. Part of a Department of Commerce initiative, this website includes self-help "toolkits" giving innovators guidance on how to protect intellectual property in specific countries such as China, Korea and Mexico. For questions regarding patent enforcement issues, applicants may call the U.S. Government hotline at 1-866-999-HALT (1-866-999-4158).

LICENSE FOR FOREIGN FILING UNDER

Title 35, United States Code, Section 184

Title 37, Code of Federal Regulations, 5.11 & 5.15

GRANTED

The applicant has been granted a license under 35 U.S.C. 184, if the phrase "IF REQUIRED, FOREIGN FILING LICENSE GRANTED" followed by a date appears on this form. Such licenses are issued in all applications where

the conditions for issuance of a license have been met, regardless of whether or not a license may be required as set forth in 37 CFR 5.15. The scope and limitations of this license are set forth in 37 CFR 5.15(a) unless an earlier license has been issued under 37 CFR 5.15(b). The license is subject to revocation upon written notification. The date indicated is the effective date of the license, unless an earlier license of similar scope has been granted under 37 CFR 5.13 or 5.14.

This license is to be retained by the licensee and may be used at any time on or after the effective date thereof unless it is revoked. This license is automatically transferred to any related applications(s) filed under 37 CFR 1.53(d). This license is not retroactive.

The grant of a license does not in any way lessen the responsibility of a licensee for the security of the subject matter as imposed by any Government contract or the provisions of existing laws relating to espionage and the national security or the export of technical data. Licensees should apprise themselves of current regulations especially with respect to certain countries, of other agencies, particularly the Office of Defense Trade Controls, Department of State (with respect to Arms, Munitions and Implements of War (22 CFR 121-128)); the Bureau of Industry and Security, Department of Commerce (15 CFR parts 730-774); the Office of Foreign AssetsControl, Department of Treasury (31 CFR Parts 500+) and the Department of Energy.

NOT GRANTED

No license under 35 U.S.C. 184 has been granted at this time, if the phrase "IF REQUIRED, FOREIGN FILING LICENSE GRANTED" DOES NOT appear on this form. Applicant may still petition for a license under 37 CFR 5.12, if a license is desired before the expiration of 6 months from the filing date of the application. If 6 months has lapsed from the filing date of this application and the licensee has not received any indication of a secrecy order under 35 U.S.C. 181, the licensee may foreign file the application pursuant to 37 CFR 5.15(b).

UNITED STATES PATENT AND TRADEMARK OFFICE

UNITED STATES DEPARTMENT OF COMMERCE
United States Patent and Trademark Office
Address: COMMISSIONER FOR PATENTS
P.O. Box 1450
Alexandria, Virginia 22313-1450
www.uspto.gov

Workman Nydegger
1000 Eagle Gate Tower
60 East South Temple
Salt Lake City, UT 84111

Mail Date: 04/21/2010

Applicant	: Tzu-Yu Wang	: DECISION ON REQUEST FOR
Patent Number	: 7564887	: RECALCULATION of PATENT
Issue Date	: 07/21/2009	: TERM ADJUSTMENT IN VIEW
Appliction No	: 11/066,793	: OF WYETH
Filed	: 02/25/2005	:
		:

The Patentee's Request for Recalculation is **DISMISSED.**

This Request is deemed ineligible for consideration for one or more of the following reasons:

(A). The patent for which PTA recalculation is requested is either a design or reissue application or is a reexamination proceeding;

(B). The patent for which PTA recalculation is requested resulted from a utility or plant application filed under 35 USC 111(a) before May 29, 2000 and no CPA filed in the application on/after May 29, 2000;

(C). The patent for which PTA recalculation is requested resulted from an international application in which the international filing date was before May 29, 2000 and no CPA filed in the application on/after May 29, 2000;

(D). The patent for which PTA recalculation is requested issued on/after March 2, 2010;

(E). The Request for Recalculation was filed more than 180 days after the grant date of the patent and the request was not filed within two months of a dismissal of a request for reconsideration of the of the patent term under 37 CFR 1.705(d);

(F). The Request for Recalculation is not solely limited to USPTO pre-Wyeth interpretation of 35 U.S.C. 154(b)(2)(A);

or

(G). A civil action was filed pursuant to 35 U.S.C. 154(b)(4)(A)concerning the same patent at issue in this request.

Patentee may file a reply to this decision dismissing the Request for Recalculation. Patentee must file such reply within one month or thirty days, whichever is longer, of the mail date of the decision dismissing the Request for Recalculation. No fee is required if patentee is asserting in the reply that the dismissal for ineligibility is improper.

Patentee should use document code PET.OP if electronically filing a reply to this dismissal. If the USPTO finds that the request was improperly deemed ineligible, the USPTO will mail applicant a recalculation determination.

Patentee should be aware that in order to preserve the right to review in the United States District Court for the District of Columbia of the USPTO patent term adjustment determination, patentee must ensure that he or she also take the steps required under 35 U.S.C. 154(b)(4)(A). Nothing in the request for recalculation should be construed as providing an alternative time frame for commencing a civil action under 35 U.S.C. 154 (b)(4)(A).

Any questions concerning this decision should be directed to the Office of Patent Legal Administration at 571-272-7702.

UNITED STATES PATENT AND TRADEMARK OFFICE

Commissioner for Patents
United States Patent and Trademark Office
P.O. Box 1450
Alexandria, VA 22313-1450
www.uspto.gov

CAVEN & AGHEVLI, LLC
PORTIFOLIO IP
PO BOX 52050
MINNEAPOLIS, MN 55402

MAILED

MAY 18 2010

OFFICE OF PETITIONS

In re Application of	:	
Don J. Nguyen	:	
Application No. 11/066,796	:	DECISION GRANTING PETITION
Filed: February 25, 2005	:	UNDER 37 CFR 1.313(c)(2)
Attorney Docket No. P21511	:	

This is a decision on the petition under 37 CFR 1.313(c)(2), filed May 18, 2010, to withdraw the above-identified application from issue after payment of the issue fee.

The petition is **GRANTED**.

The above-identified application is withdrawn from issue for consideration of a submission under 37 CFR 1.114 (request for continued examination). *See* 37 CFR 1.313(c)(2).

Petitioner is advised that the issue fee paid on April 12, 2010 cannot be refunded. If, however, this application is again allowed, petitioner may request that it be applied towards the issue fee required by the new Notice of Allowance.[1]

Telephone inquiries regarding this decision should be directed to undersigned at (571) 272-1642. All other inquiries concerning the examination or status of this application should be directed to the Technology Center.

This application is being referred to Technology Center AU 2116 for processing of the request for continued examination under 37 CFR 1.114 and for consideration of the concurrently filed information disclosure statement.

/AMW/
April M. Wise
Petitions Examiner
Office of Petitions

---

[1] *The request to apply the issue fee to the new Notice may be satisfied by completing and returning the new Part B – Fee(s) Transmittal Form (along with any balance due at the time of submission). Petitioner is advised that the Issue Fee Transmittal Form must be completed and timely submitted to avoid abandonment of the application.*

UNITED STATES PATENT AND TRADEMARK OFFICE

Commissioner for Patents
United States Patent and Trademark Office
P.O. Box 1450
Alexandria, VA 22313-1450
www.uspto.gov

COPY MAILED

JUL 29 2009

OFFICE OF PETITIONS

THE ECLIPSE GROUP, LLP
10605 BALBOA BLVD., SUITE 300
GRANADA HILLS, CA 91344

In re Application of	:	
Shawn Pasternak	:	
Application No. 11/066,798	:	DECISION ON PETITION
Filed: February 25, 2005	:	
Attorney Docket No. AA05001USU	:	

This is a decision on the petition under 37 CFR 1.181 filed February 6, 2009, requesting withdrawal of the holding of abandonment in the above-identified application.

The petition is **GRANTED**.

This application was held abandoned for failure to timely respond to the non-final Office action mailed December 11, 2007. A Notice of Abandonment was mailed on December 7, 2008.

Petitioner states that a timely reply, in the form of a response, petition for extension of time and a credit card authorization, was sent to the Office via facsimile transmission on April 11, 2008. Petitioner has submitted a copy of the previously submitted correspondence that includes an Auto-Reply Facsimile Transmission report that shows the Office received the items listed above on April 11, 2008, which would have rendered the reply timely if received.

The file record does not include the originally submitted papers. Failure to receive correspondence which includes a certificate of mailing or certificate of facsimile transmission is addressed in 37 CFR 1.8(b), reproduced below:

> In the event that correspondence is considered timely filed by being mailed or transmitted in accordance with paragraph (a) of this section, but not received in the U.S. Patent and Trademark Office after a reasonable amount of time has elapsed from the time of mailing or transmitting of the correspondence, or after the application is held to be abandoned, or after the proceeding is dismissed, terminated, or decided with prejudice, the correspondence will be considered timely if the party who forwarded such correspondence:

(1) Informs the Office of the previous mailing or transmission of the correspondence promptly after becoming aware that the Office has no evidence of receipt of the correspondence;

(2) Supplies an additional copy of the previously mailed or transmitted correspondence and certificate; and

(3) Includes a statement which attests on a personal knowledge basis or to the satisfaction of the Director to the previous timely mailing or transmission. If the correspondence was sent by facsimile transmission, a copy of the sending unit's report confirming transmission may be used to support this statement.

The petition satisfies the above requirements of 37 CFR 1.8(b). Accordingly, the holding of abandonment for failure to timely file a reply to the Office action of December 11, 2007 is hereby withdrawn and the application restored to pending status.

The copy of the reply received with the petition will be accepted in place of the reply shown to have been transmitted by facsimile on Aril 11, 2008.

Since the address given in the present petition differs from the address of record, a courtesy copy will be mailed to the address given in the present petition. Thereafter, all future correspondence will be mailed to the address of record until other instructions are received.

This application is being referred to Technology Center Art Unit 2618 for appropriate action in the normal course of business on the reply received with petition.

Andrea Smith
Petitions Examiner
Office of Petitions

cc: Jeffrey C. Wilk
The Eclipse Group LLP
1920 Main Street, Suite 150
Irvine, CA 92614

UNITED STATES PATENT AND TRADEMARK OFFICE

Commissioner for Patents
United States Patent and Trademark Office
P.O. Box 1450
Alexandria, VA 22313-1450
www.uspto.gov

Casimir Jones, S.C.
440 Science Drive
Suite 203
Madison WI 53711

COPY MAILED

DEC 0 5 2008

OFFICE OF PETITIONS

In re Patent No. 7,335,382	:	
Issue Date: February 26, 2008	:	
Application No. 11/066,802	:	ON PETITION
Filed: February 25, 2005	:	
Attorney Docket No. NWESTERN-09735	:	

This is a decision on the petition filed August 27, 2008, which is being treated as a request under 37 CFR 3.81(b)[1] to correct the name of the assignee on the front page of the above-identified patent by way of a Certificate of Correction.

The request is **GRANTED**.

Telephone inquiries concerning this decision may be directed to JoAnne Burke at (571) 272-4584. Inquiries regarding the issuance of a certificate of correction should be directed to the Certificate of Correction Branch at (571) 272-4200.

The Certificates of Correction Branch will be notified of this decision granting the petition under 37 CFR 3.81(b) and directing issuance of the requested Certificate of Correction.

Ramesh Krishnamurthy

Ramesh Krishnamurthy
Petitions Examiner
Office of Petitions

[1] *See* MPEP 1309, subsection II; and Official Gazette of June 22, 2004.

UNITED STATES PATENT AND TRADEMARK OFFICE

Commissioner for Patents
United States Patent and Trademark Office
P.O. Box 1450
Alexandria, VA 22313-1450
www.uspto.gov

BAKER BOTTS L.L.P.
2001 ROSS AVENUE, 6TH FLOOR
DALLAS TX 75201-2980

COPY MAILED
NOV 16 2005
OFFICE OF PETITIONS

In re Application of
Declan (nmi) O'Keeffe, et al.
Application No.: 11/066,817
Filed: February 25, 2005
Attorney Docket No.: 03-032 US1
(065274.0132)
For: SYSTEM AND METHOD FOR STIMULATING PERIPHERAL NERVES TO TREAT PAIN

:DECISION REFUSING STATUS
:UNDER 37 CFR 1.47(a)

This is a decision on the petition under 37 CFR 1.47(a), filed October 21, 2005.

The petition is **DISMISSED**.

Any request for reconsideration of this decision must be submitted within TWO (2) MONTHS from the mail date of this decision. Extensions of time under 37 CFR 1.136(a) are permitted. Any response should be entitled "Request for Reconsideration of Petition Under 37 CFR 1.47(a)" and may include an oath or declaration executed by the inventor. **Failure to respond will result in abandonment of the application.**

The above-identified application was filed on February 25, 2005 without an executed declaration. On March 24, 2005, the Office mailed a Notice to File Missing Parts of Nonprovisional Application requiring applicants to submit an executed oath/declaration and a surcharge for its late filing within an extendable two month period from the mail date of the Notice.

In response, on October 21, 2005, petitioners timely filed a 5 month extension of time and required fee, a declaration executed by 2 of 3 joint inventors, the surcharge, the instant petition and partial payment of the Rule 47 petition fee. Attorney Russell J. Crain explains in a declaration that the non-signing inventor, Declan (nmi) O'Keeffe, was successfully mailed a copy of the application and declaration, but refused to sign the declaration during two conversations with Max Paton, Vice President of International Sales for Advanced Neuromodulation Systems, Inc.

A grantable petition under 37 CFR 1.47(a) requires

(1) a petition including proof of the pertinent facts establishing that the joint inventor(s) refuses to join, or cannot be found or reached after diligent effort,
(2) a proper oath or Declaration executed by the available joint inventor(s),
(3) the petition fee of $200, and
(4) the last known address of the omitted inventor(s).

This petition lacks item (1) above.

As to item (1), Applicants have failed to establish that the inventor has refused to sign the declaration.

As stated in MPEP 409.03(d), " Where a refusal of the inventor to sign the application papers is alleged, the circumstances of the presentation of the application papers and of the refusal must be specified in a statement of facts by the person who presented the inventor with the application papers and/or to whom the refusal was made. Statements by a party not present when an oral refusal is made will not be accepted."

Mr. O'Keeffe supposedly informed Mr. Paton, not Mr. Crain, that he would not cooperate in the filing of the application on two separate occasions. The Office would like Mr. Paton, to provide a statement regarding Mr. O'Keeffe's refusals to sign the declaration. The statement of facts must be signed by a person having *firsthand knowledge* of the facts recited therein. Statements based on hearsay will not normally be accepted.

In addition, the Office would like to see a copy of the FedEx tracking receipt proving that the application and declaration were delivered to Mr. O'Keeffe's last known correspondence address.

Regarding fees, the current Rule 47 petition fee is $200.00. Petitioners submitted only $130.00. Pursuant to petitioners' authorization, deposit account no. 02-0384 will be charged the $70.00 balance due.

Further correspondence with respect to this matter should be addressed as follows:

By mail:
Mail Stop PETITION
Commissioner for Patents
Post Office Box 1450
Alexandria, VA 22313-1450

By hand:
U.S. Patent and Trademark Office
Customer Service Window, Mail Stop Petition
Randolph Building
401 Dulany Street
Alexandria, VA 22314

By FAX: (703) 872-9306 – ATTN: Office of Petitions

Telephone inquiries should be directed to the undersigned at (571) 272-3230.

E. Shirene Willis

E. Shirene Willis
Senior Petitions Attorney
Office of Petitions

UNITED STATES PATENT AND TRADEMARK OFFICE

Commissioner for Patents
United States Patent and Trademark Office
P.O. Box 1450
Alexandria, VA 22313-1450
www.uspto.gov

BAKER BOTTS L.L.P.
2001 ROSS AVENUE, 6TH FLOOR
DALLAS TX 75201-2980

COPY MAILED

JUN 13 2006

OFFICE OF PETITIONS

In re Application of
Declan (nmi) O'Keeffe, et al.
Application No.: 11/066,817
Filed: February 25, 2005
Attorney Docket No.: 03-032 US1
(065274.0132)
For: SYSTEM AND METHOD FOR STIMULATING PERIPHERAL NERVES TO TREAT PAIN

:
:DECISION NOTING JOINDER OF
:INVENTOR AND PETITION
:UNDER 37 CFR 1.47(A) DISMISSED
:AS MOOT
:

Papers filed on May 4, 2006 in reply to "Decision Refusing Status Under 37 CFR 1.47(a)" mailed on November 16, 2005, included a Declaration signed by the previously non-signing inventor, Declan (nmi) O'Keeffe, in compliance with 37 CFR 1.63.

In view of the joinder of the inventor, further consideration under 37 CFR 1.47(a) is moot; this application does not have any rule 1.47(a) status and no such status should appear on the file wrapper. This application need not be returned to this office for any further consideration under 37 CFR 1.47(a).

This application will be forwarded to Technology Center AU 3762 for examination in due course.

Telephone inquiries should be directed to the undersigned at (571) 272-3230.

Shirene Willis Brantley
Senior Petitions Attorney
Office of Petitions

UNITED STATES PATENT AND TRADEMARK OFFICE

UNITED STATES DEPARTMENT OF COMMERCE
United States Patent and Trademark Office
Address: COMMISSIONER FOR PATENTS
P.O. Box 1450
Alexandria, Virginia 22313-1450
www.uspto.gov

HAYNES BEFFEL & WOLFELD LLP
P O BOX 366
HALF MOON BAY, CA 94019

Mail Date: 04/21/2010

Applicant	: Torbjorn Sandstrom	: DECISION ON REQUEST FOR
Patent Number	: 7618751	: RECALCULATION of PATENT
Issue Date	: 11/17/2009	: TERM ADJUSTMENT IN VIEW
Appliction No	: 11/066,828	: OF WYETH AND NOTICE OF INTENT TO
Filed	: 02/25/2005	: ISSUE CERTIFICATE OF CORRECTION
		:

The Request for Recalculation is **GRANTED** to the extent indicated.

The patent term adjustment has been determined to be **1210** days. The USPTO will *sua sponte* issue a certificate of correction reflecting the amount of PTA days determined by the recalculation.

Prior to the issuance of the certificate of correction, the USPTO will afford patentee an opportunity to be heard and request reconsideration. Accordingly, patentee has **one month or thirty (30) days**, whichever is longer, to file a request for reconsideration of this patent term adjustment calculation. See 35 U.S.C. 154(b)(3)(B)(ii) and 37 CFR 1.322(a)(4). No extensions of time will be granted under 37 CFR 1.136.

Patentee should use document code PET.OP if electronically filing a request for reconsideration of this patent term adjustment calculation. The patentee must also include the information required by 37 CFR 1.705(b)(2) and the fee required by 37 CFR 1.18(e). If patentee does not file a timely request for reconsideration of this patent term adjustment calculation including the information required by 37 CFR 1.705(b)(2) and the fee required by 37 CFR 1.18(e), the USPTO will issue a certificate of correction reflecting the PTA determination noted above.

Patentee should be aware that in order to preserve the right to review in the United States District Court for the District of Columbia of the USPTO patent term adjustment determination, patentee must ensure that he or she also take the steps required under 35 U.S.C. 154(b)(4)(A) in a timely manner. Nothing in the request for recalculation should be construed as providing an alternative time frame for commencing a civil action under 35 U.S.C. 154(b)(4)(A).

Any questions concerning this decision should be directed to the Office of Patent Legal Administration at 571-272-7702.

UNITED STATES PATENT AND TRADEMARK OFFICE

Commissioner for Patents
United States Patent and Trademark Office
P.O. Box 1450
Alexandria, VA 22313-1450
www.uspto.gov

VERIGY, LTD.
IP LEGAL DEPARTMENT
10100 N. TANTAU AVENUE
CUPERTINO CA 95014-2540

COPY MAILED

MAR 18 2008

OFFICE OF PETITIONS

In re Application of	:	
Matsumiya, Hiroshi	:	
Application No. 11/066,832	:	DECISION ON PETITION
Filed: February 25, 2005	:	
Attorney Docket No. 10050002-1	:	

This is a decision on the petition under the unintentional provisions of 37 CFR 1.137(b), filed February 25, 2008, to revive the above-identified application.

The petition is **GRANTED**.

The petition satisfies the requirements of 37 CFR 1.137(b) in that petitioner has supplied (1) the reply in the form of an Amendment and Terminal Disclaimer, (2) the petition fee, and (3) a proper statement of unintentional delay.

There is no indication that the person signing the instant petition was ever given a power of attorney or authorization of agent to prosecute the above-identified application. If the person signing the instant petition desires to receive future correspondence regarding this application, the appropriate power of attorney or authorization of agent must be submitted. While a courtesy copy of this decision is being mailed to the person signing the instant petition, all future correspondence will be directed solely to the address currently of record until such time as appropriate instructions are received to the contrary.

Telephone inquiries concerning this decision should be directed to the undersigned at (571) 272-3206.

This matter is being referred to Technology Center 2825 for further examination on the merits.

Liana Walsh
Petitions Examiner
Office of Petitions

Cc:

HOLLAND & HART LLP
555 SEVENTEENTH ST., STE 2700
DENVER, CO 80202

UNITED STATES PATENT AND TRADEMARK OFFICE

Commissioner for Patents
United States Patent and Trademark Office
P.O. Box 1450
Alexandria, VA 22313-1450
www.uspto.gov

LATHROP & GAGE LLP
4845 PEARL EAST CIRCLE
SUITE 201
BOULDER CO 80301

COPY MAILED

JUN 04 2009

OFFICE OF PETITIONS

In re Application of	:	
Clifford Greyson et al.	:	
Application No. 11/066,839	:	DECISION ON PETITION
Filed: February 25, 2005	:	TO WITHDRAW
Attorney Docket No. 021433-000414US	:	FROM RECORD

This is a decision on the Request to Withdraw as attorney or agent of record under 37 C.F.R. § 1.36(b), filed March 24, 2009.

The request is **NOT APPROVED**.

A grantable request to withdraw as attorney/agent of record must be signed by every attorney/agent seeking to withdraw or contain a clear indication that one attorney is signing on behalf of another/others.

The request cannot be approved because effective May 12, 2008, the Office no longer accept address changes to a new practitioner or law firm filed with a request, absent the filing of a power of attorney to the new representative.

All future communications from the Office will continue to be directed to the above-listed address until otherwise notified by applicant.

Telephone inquiries concerning this decision should be directed to JoAnne Burke at 571-272-4584.

Ramesh Krishnamurthy

Ramesh Krishnamurthy
Petitions Examiner
Office of Petitions

SPE RESPONSE FOR CERTIFICATE OF CORRECTION

Paper No.: _____

DATE : June 10, 2009

TO SPE OF : ART UNIT 2873
SUBJECT : Request for Certificate of Correction for Appl. No.: 11/0668646 /7339714
Please respond to this request for a certificate of correction within 7 days.

FOR IFW FILES:

Please review the requested changes/corrections as shown in the **COCIN** document(s) in the IFW application image. No new matter should be introduced, nor should the scope or meaning of the claims be changed.

Please complete the response (see below) and forward the completed response to scanning using document code **COCX**.

FOR PAPER FILES:

Please review the requested changes/corrections as shown in the attached certificate of correction. Please complete this form (see below) and forward it with the file to:

Certificates of Correction Branch (CofC)
South Tower - 9A22
Palm Location 7580

Magdalene Talley
Certificates of Correction Branch

703-308-9390 ext. 120

Thank You For Your Assistance

The request for issuing the above-identified correction(s) is hereby:
Note your decision on the appropriate box.

- [X] **Approved** — **All** changes apply.
- [ ] **Approved in Part** — Specify below which changes **do not** apply.
- [ ] **Denied** — State the reasons for denial below.

Comments: The applicant is simply deleting duplicate language in claim 20 of patent 7,339,714, which neither broadens or narrows claim 20.

Timothy Thompson
Primary Examiner

/Ricky Mack/
SPE

2873
Art Unit

UNITED STATES PATENT AND TRADEMARK OFFICE

UNITED STATES DEPARTMENT OF COMMERCE
United States Patent and Trademark Office
Address: COMMISSIONER FOR PATENTS
P.O. Box 1450
Alexandria, Virginia 22313-1450
www.uspto.gov

APPL NO.	FILING OR 371 (c) DATE	ART UNIT	FIL FEE REC'D	ATTY.DOCKET NO	DRAWINGS	TOT CLMS	IND CLMS
11/066,864	02/25/2005	1746	700	SCP-10410	3	28	2

CONFIRMATION NO. 6081

CORRECTED FILING RECEIPT

OC000000016237504

28584
STALLMAN & POLLOCK LLP
SUITE 2200
353 SACRAMENTO STREET
SAN FRANCISCO, CA 94111

Date Mailed: 06/09/2005

Receipt is acknowledged of this regular Patent Application. It will be considered in its order and you will be notified as to the results of the examination. Be sure to provide the U.S. APPLICATION NUMBER, FILING DATE, NAME OF APPLICANT, and TITLE OF INVENTION when inquiring about this application. Fees transmitted by check or draft are subject to collection. Please verify the accuracy of the data presented on this receipt. **If an error is noted on this Filing Receipt, please mail to the Commissioner for Patents P.O. Box 1450 Alexandria Va 22313-1450. Please provide a copy of this Filing Receipt with the changes noted thereon. If you received a "Notice to File Missing Parts" for this application, please submit any corrections to this Filing Receipt with your reply to the Notice. When the USPTO processes the reply to the Notice, the USPTO will generate another Filing Receipt incorporating the requested corrections (if appropriate).**

Applicant(s)

Eric Hansen, Boise, ID;

Power of Attorney: None

Domestic Priority data as claimed by applicant

This appln claims benefit of 60/548,468 02/27/2004

Foreign Applications

If Required, Foreign Filing License Granted: 03/22/2005

The country code and number of your priority application, to be used for filing abroad under the Paris Convention, is US11/066,864

Projected Publication Date: To Be Determined - pending completion of Missing Parts

Non-Publication Request: No

Early Publication Request: No

**** SMALL ENTITY ****

BEST AVAILABLE COPY

Title

Apparatus and method for drying substrates

Preliminary Class

134

LICENSE FOR FOREIGN FILING UNDER
Title 35, United States Code, Section 184
Title 37, Code of Federal Regulations, 5.11 & 5.15

GRANTED

The applicant has been granted a license under 35 U.S.C. 184, if the phrase "IF REQUIRED, FOREIGN FILING LICENSE GRANTED" followed by a date appears on this form. Such licenses are issued in all applications where the conditions for issuance of a license have been met, regardless of whether or not a license may be required as set forth in 37 CFR 5.15. The scope and limitations of this license are set forth in 37 CFR 5.15(a) unless an earlier license has been issued under 37 CFR 5.15(b). The license is subject to revocation upon written notification. The date indicated is the effective date of the license, unless an earlier license of similar scope has been granted under 37 CFR 5.13 or 5.14.

This license is to be retained by the licensee and may be used at any time on or after the effective date thereof unless it is revoked. This license is automatically transferred to any related applications(s) filed under 37 CFR 1.53(d). This license is not retroactive.

The grant of a license does not in any way lessen the responsibility of a licensee for the security of the subject matter as imposed by any Government contract or the provisions of existing laws relating to espionage and the national security or the export of technical data. Licensees should apprise themselves of current regulations especially with respect to certain countries, of other agencies, particularly the Office of Defense Trade Controls, Department of State (with respect to Arms, Munitions and Implements of War (22 CFR 121-128)); the Office of Export Administration, Department of Commerce (15 CFR 370.10 (j)); the Office of Foreign Assets Control, Department of Treasury (31 CFR Parts 500+) and the Department of Energy.

NOT GRANTED

No license under 35 U.S.C. 184 has been granted at this time, if the phrase "IF REQUIRED, FOREIGN FILING LICENSE GRANTED" DOES NOT appear on this form. Applicant may still petition for a license under 37 CFR 5.12, if a license is desired before the expiration of 6 months from the filing date of the application. If 6 months has lapsed from the filing date of this application and the licensee has not received any indication of a secrecy order under 35 U.S.C. 181, the licensee may foreign file the application pursuant to 37 CFR 5.15(b).

UNITED STATES PATENT AND TRADEMARK OFFICE

Commissioner for Patents
United States Patent and Trademark Office
P.O. Box 1450
Alexandria, VA 22313-1450
www.uspto.gov

WINSTEAD SECHREST AND MINK PC
100 CONGRESS AVENUE, SUITE 800
AUSTIN, TX 78701

COPY MAILED

MAR 30 2007

OFFICE OF PETITIONS

RECEIVED
MAR 30 2007
OFFICE OF PETITIONS

CANCELLED

In re Application of
Jeremy **PETTY** et al.
Application No. 11/066,868
Filed: February 24, 2005
Attorney Docket No. 683998-0002

DECISION ON PETITION
TO WITHDRAW
FROM RECORD

This is a decision on the Request to Withdraw as attorney or agent of record under 37 C.F.R. § 1.36(b), filed July 21, 2006.

The request is **APPROVED**.

A grantable request to withdraw as attorney/agent of record must be signed by every attorney/agent seeking to withdraw or contain a clear indication that one attorney is signing on behalf of another/others. A request to withdraw will not be approved unless at least 30 (thirty) days would remain between the date of approval and the later of the expiration date of a time to file a response or the expiration date of the maximum time period which can be extended under 37 C.F.R. § 1.136(a).

The request was signed by Ross Spencer Garsson on behalf of all attorneys of record.. All attorneys/agents associated have been withdrawn. Applicant is reminded that there is no attorney of record at this time.

The request to change the correspondence of record is not acceptable as the requested correspondence address is not that of: (1) the first named signing inventor; or (2) an intervening assignee of the entire interest under 37 C.F.R 3.71. All future communications from the Office will be directed to the first named signing inventor at the first copied address below until otherwise properly notified by the applicant.

Telephone inquiries concerning this decision should be directed to the undersigned at 571-272-7253.

Monica A. Graves
Petitions Examiner
Office of Petitions

cc: **JEREMY PETTY**
410 SAN MARIA
GARLAND TX 75043

cc: **RUBEN C. DELEON**
AKIM GUMP STRAUSS HAUER & FELD LLP
1700 PACIFIC AVENUE, SUITE 4100
DALLAS, TX 75201

UNITED STATES PATENT AND TRADEMARK OFFICE

UNITED STATES DEPARTMENT OF COMMERCE
United States Patent and Trademark Office
Address: COMMISSIONER FOR PATENTS
P.O. Box 1450
Alexandria, Virginia 22313-1450
www.uspto.gov

DORITY & MANNING, P.A.
POST OFFICE BOX 1449
GREENVILLE, SC 29602-1449

Mail Date: 04/21/2010

Applicant	: Eric Adriaan Van Hillo	: DECISION ON REQUEST FOR
Patent Number	: 7662034	: RECALCULATION of PATENT
Issue Date	: 02/16/2010	: TERM ADJUSTMENT IN VIEW
Appliction No	: 11/066,870	: OF WYETH AND NOTICE OF INTENT TO
Filed	: 02/25/2005	: ISSUE CERTIFICATE OF CORRECTION
		:

The Request for Recalculation is **GRANTED** to the extent indicated.

The patent term adjustment has been determined to be **612** days. The USPTO will *sua sponte* issue a certificate of correction reflecting the amount of PTA days determined by the recalculation.

Prior to the issuance of the certificate of correction, the USPTO will afford patentee an opportunity to be heard and request reconsideration. Accordingly, patentee has **one month or thirty (30) days**, whichever is longer, to file a request for reconsideration of this patent term adjustment calculation. See 35 U.S.C. 154(b)(3)(B)(ii) and 37 CFR 1.322(a)(4). No extensions of time will be granted under 37 CFR 1.136.

Patentee should use document code PET.OP if electronically filing a request for reconsideration of this patent term adjustment calculation. The patentee must also include the information required by 37 CFR 1.705(b)(2) and the fee required by 37 CFR 1.18(e). If patentee does not file a timely request for reconsideration of this patent term adjustment calculation including the information required by 37 CFR 1.705(b)(2) and the fee required by 37 CFR 1.18(e), the USPTO will issue a certificate of correction reflecting the PTA determination noted above.

Patentee should be aware that in order to preserve the right to review in the United States District Court for the District of Columbia of the USPTO patent term adjustment determination, patentee must ensure that he or she also take the steps required under 35 U.S.C. 154(b)(4)(A) in a timely manner. Nothing in the request for recalculation should be construed as providing an alternative time frame for commencing a civil action under 35 U.S.C. 154(b)(4)(A).

Any questions concerning this decision should be directed to the Office of Patent Legal Administration at 571-272-7702.

UNITED STATES PATENT AND TRADEMARK OFFICE

Commissioner for Patents
United States Patent and Trademark Office
P.O. Box 1450
Alexandria, VA 22313-1450
www.uspto.gov

JUN - 3 2005

QUARLES & BRADY LLP
Renaissance One
Two North Central Avenue
Phoenix, AZ 85004-2391

In re application of	:	**DECISION ON PETITION**
James R. Ayers JR. et al	:	**TO MAKE SPECIAL**
Application No. 11/066,889	:	**(INFRINGEMENT)**
Filed: February 24, 2005	:	
For: SYSTEM AND METHOD OF POINT-OF-SALE MANUFACTURE REBATE PROGRAM		

This is a decision on the petition under 37 C.F.R § 1.102(d) filed May 27, 2005 to make the above-identified application special.

The petition requests that the above-identified application be made special under the procedure set forth in M.P.E.P. § 708.02, item II: Infringement.

MPEP 708.02 states that a Petition to Make Special based on Infringement must have the following: (1) the appropriate petition fee under 37 CFR 1.17(i); (2) a statement by the assignee, applicant, or attorney alleging: (A) that there is an infringing device or product actually on the market or method in use; (B) that a rigid comparison of the alleged infringing device, product or method with the claims of the application has been made, and that, in his or her opinion, some of the claims are unquestionably infringed; and (C) that he or she has made a careful and thorough search of the prior art, or has good knowledge of the prior art, and has sent a copy of the references deemed most closely related to the subject matter encompassed by the claims.

The petition filed May 27, 2005 meets all of the requirements above and, therefore, the petition is **GRANTED**.

With regards to element 2(C) above, an Information Disclosure Statement was filed on May 27, 2005.

The examiner is directed (1) to make an interference search for possible interfering applications; (2) to promptly examine this application out of turn; and (3) if any interfering application is discovered, to examine such application simultaneously and state in the first official letter of such application that it is being taken out of turn because of a possible interference.

Petitioner is advised that this application will continue to be special, throughout its entire prosecution and pendency, including interference and appeal, if any, only if petitioner makes a prompt *bona fide* effort, in response to each Office action, to place the application in condition for allowance, even if it is necessary to conduct an interview with the examiner to accomplish this purpose.

Steven N. Meyers
Special Programs Examiner
Technology Center 3600
(571) 272-6611

SNM/pav: 06/02/05

UNITED STATES PATENT AND TRADEMARK OFFICE

Commissioner for Patents
United States Patent and Trademark Office
P.O. Box 1450
Alexandria, VA 22313-1450
www.uspto.gov

COPY MAILED

JUN 1 7 2008

OFFICE OF PETITIONS

QUARLES & BRADY, LLP
RENAISSANCE ONE
TWO NORTH CENTRAL AVENUE
PHOENIX, AZ 85004-2391

In re Application of

John R. Ayers, Jr. et al.
Application No. 11/066,889
Filed: February 24, 2005
Attorney Docket No. 110803.00002

DECISION ON PETITION
TO WITHDRAW
FROM RECORD

This is a decision on the Request to Withdraw as attorney or agent under 37 C.F.R. § 1.36(b) or 37 C.F.R. § 10.40 February 15, 2008.

The request is **APPROVED**.

A grantable request to withdraw as attorney/agent of record must be signed by every attorney/agent seeking to withdraw or contain a clear indication that one attorney is signing on behalf of another/others. A request to withdraw will not be approved unless at least 30 (thirty) days would remain between the date of approval and the later of the expiration date of a time to file a response or the expiration date of the maximum time period which can be extended under 37 C.F.R. § 1.136(a).

The request was signed by Robert D. Atkins on behalf of all attorneys of record who are associated with customer No. 26707. All attorneys/agents associated with the Customer Number 26707 have been withdrawn.

The correspondence address has been changed and is copied below.

Telephone inquires concerning this decision should be directed to Kimberly Inabinet at 571-272-4618.

Kimberly Inabinet
Petitions Examiner
Office of Petitions

cc: James R. Ayers, Jr.
1790 E. River Road
Suite 205
Tucson, AZ 85718

UNITED STATES PATENT AND TRADEMARK OFFICE

UNITED STATES DEPARTMENT OF COMMERCE
United States Patent and Trademark Office
Address: COMMISSIONER FOR PATENTS
P.O. Box 1450
Alexandria, Virginia 22313-1450
www.uspto.gov

APPLICATION NUMBER	FILING OR 371(C) DATE	FIRST NAMED APPLICANT	ATTY. DOCKET NO./TITLE
11/066,889	02/24/2005	James R. Ayers JR.	110803.00002

CONFIRMATION NO. 4531

POWER OF ATTORNEY NOTICE

26707
QUARLES & BRADY LLP
RENAISSANCE ONE
TWO NORTH CENTRAL AVENUE
PHOENIX, AZ 85004-2391

OC000000030505097

Date Mailed: 06/16/2008

NOTICE REGARDING CHANGE OF POWER OF ATTORNEY

This is in response to the Power of Attorney filed 02/15/2008.

- The withdrawal as attorney in this application has been accepted. Future correspondence will be mailed to the new address of record. 37 CFR 1.33.

/kainabinet/

Office of Data Management, Application Assistance Unit (571) 272-4000, or (571) 272-4200, or 1-888-786-0101

UNITED STATES PATENT AND TRADEMARK OFFICE

Commissioner for Patents
United States Patent and Trademark Office
P.O. Box 1450
Alexandria, VA 22313-1450
www.uspto.gov

MICROSOFT CORPORATION
ONE MICROSOFT WAY
REDMOND WA 98052

COPY MAILED

APR 24 2009

OFFICE OF PETITIONS

In re Application of	:	
Paul England, et al.	:	
Application No. 11/066,890	:	DECISION ON PETITION
Filed: February 25, 2005	:	
Attorney Docket No. 155694.04	:	

This is a decision on the petition under the unintentional provisions of 37 CFR 1.137(b), filed February 16, 2009, to revive the above-identified application.

The petition is **GRANTED**.

This application became abandoned for failure to timely pay the issue and publication fees on or before December 26, 2008, as required by the Notice of Allowance and Fee(s) Due, mailed September 26, 2008. Accordingly, the date of abandonment of this application is December 27, 2008. The Notice of Abandonment was mailed January 23, 2009.

The petition satisfies the requirements of 37 CFR 1.137(b) in that petitioner has supplied (1) the reply in the form of payment of the issue fee of $1,510 and the publication fee of $300, (2) the petition fee of $1,620; and (3) a proper statement of unintentional delay.

Telephone inquiries concerning this decision should be directed to Terri Williams at (571) 272-2991.

This application is being referred to the Office of Data Management for processing into a patent.

Chris Bottorff
Petitions Examiner
Office of Petitions

UNITED STATES PATENT AND TRADEMARK OFFICE

UNITED STATES DEPARTMENT OF COMMERCE
United States Patent and Trademark Office
Address: COMMISSIONER FOR PATENTS
P.O. Box 1450
Alexandria, Virginia 22313-1450
www.uspto.gov

SCHWEGMAN, LUNDBERG & WOESSNER, P.A.
P.O. BOX 2938
MINNEAPOLIS, MN 55402

Mail Date: 05/20/2010

Applicant	: Carl-Johan Yngve Torarp	: DECISION ON REQUEST FOR
Patent Number	: 7630703	: RECALCULATION of PATENT
Issue Date	: 12/08/2009	: TERM ADJUSTMENT IN VIEW
Application No	: 11/066,904	: OF WYETH AND NOTICE OF INTENT TO
Filed	: 02/25/2005	: ISSUE CERTIFICATE OF CORRECTION
		:

The Request for Recalculation is **GRANTED** to the extent indicated.

The patent term adjustment has been determined to be **434** days. The USPTO will *sua sponte* issue a certificate of correction reflecting the amount of PTA days determined by the recalculation.

Prior to the issuance of the certificate of correction, the USPTO will afford patentee an opportunity to be heard and request reconsideration. Accordingly, patentee has **one month or thirty (30) days**, whichever is longer, to file a request for reconsideration of this patent term adjustment calculation. See 35 U.S.C. 154(b)(3)(B)(ii) and 37 CFR 1.322(a)(4). No extensions of time will be granted under 37 CFR 1.136.

Patentee should use document code PET.OP if electronically filing a request for reconsideration of this patent term adjustment calculation. The patentee must also include the information required by 37 CFR 1.705(b)(2) and the fee required by 37 CFR 1.18(e). If patentee does not file a timely request for reconsideration of this patent term adjustment calculation including the information required by 37 CFR 1.705(b)(2) and the fee required by 37 CFR 1.18(e), the USPTO will issue a certificate of correction reflecting the PTA determination noted above.

Patentee should be aware that in order to preserve the right to review in the United States District Court for the District of Columbia of the USPTO patent term adjustment determination, patentee must ensure that he or she also take the steps required under 35 U.S.C. 154(b)(4)(A) in a timely manner. Nothing in the request for recalculation should be construed as providing an alternative time frame for commencing a civil action under 35 U.S.C. 154(b)(4)(A).

Any questions concerning this decision should be directed to the Office of Patent Legal Administration at 571-272-7702.

UNITED STATES PATENT AND TRADEMARK OFFICE

Commissioner for Patents
United States Patent and Trademark Office
P.O. Box 1450
Alexandria, VA 22313-1450
www.uspto.gov

RENNER KENNER GREIVE BOBAK TAYLOR & WEBER
FIRST NATIONAL TOWER FOURTH FLOOR
106 S. MAIN STREET
AKRON OH 44308

COPY MAILED
JAN 15 2010

In re Application of	:
Wesley F. Rager	:
Application No.: 11/066,918	: ON PETITION
Filed: February 24, 2005	:
Attorney Docket No: GOJ.P.131	:

This is in response to the petition under 37 CFR 1.137(b) filed April 23, 2009.

The petition is DISMISSED.

Any request for reconsideration of this decision must be submitted within TWO (2) MONTHS from the mail date of this decision. Extensions of time under 37 CFR 1.136(a) are permitted. The reconsideration request should include a cover letter entitled "Renewed Petition" under 37 CFR 1.137(b)."

This application became abandoned for failure to respond in a timely and proper manner to the final Office action mailed January 3, 2008. The notice set a shortened statutory period for reply of three-months from its mailing date. Extensions of time were available pursuant to 37 CFR 1.136(a). The application became abandoned on April 4, 2008. A Notice of Abandonment was mailed on August 20, 2008.

Effective December 1, 1997, the provisions of 37 CFR 1.137(b) now provide that where the delay in reply was unintentional, a petition may be filed to revive an abandoned application or a lapsed patent pursuant to 37 CFR 1.137(b). A grantable petition pursuant to 37 CFR 1.137(b) must be accompanied by:

(1) the required reply, unless previously filed. In a non-provisional application abandoned for failure to prosecute, the required reply may be met by the filing of a continuing application. In an application or patent, abandoned or lapsed for failure to pay the issue fee, or any portion thereof, the required reply must be the payment of the issue fee or any outstanding balance thereof.

(2) the petition fee as set forth in 37 CFR 1.17(m);

(3) a statement that the entire delay in filing the required reply from the due date for the reply until the filing of a grantable petition pursuant to 37 CFR 1.137(b) was unintentional. The Commissioner may require additional information where there is a question whether the delay was unintentional; and

(4) any terminal disclaimer (and fee set forth in 37 CFR 1.20(d)) required pursuant to 37 CFR 1.137(c).

The instant petition does not satisfy the requirements of item (1) above.

Examiner Frederick Nicolas has reviewed the amendment filed April 23, 2009, and determined that the amendment does not place the application in condition for allowance. The petition must, therefore, be dismissed. Either an amendment that places the application in condition for allowance, a Request for Continued Examination and the fee required, or a Notice of Appeal must accompany the renewed petition.

Further correspondence with respect to this matter should be addressed as follows:

By mail:

Mail Stop Petitions
Commissioner for Patents
United States Patent and Trademark Office
Box 1450
Alexandria, VA 22313-1450

By facsimile: (571) 273-8300
Attn: Office of Petitions

Questions regarding the amendment to be filed with the renewed petition must be addressed to Examiner Nicolas. Telephone inquiries concerning this decision may be directed to the undersigned at (571) 272-3222.

Kenya A. McLaughlin
Petitions Attorney
Office of Petitions

UNITED STATES PATENT AND TRADEMARK OFFICE

Commissioner for Patents
United States Patent and Trademark Office
P.O. Box 1450
Alexandria, VA 22313-1450
www.uspto.gov

MAILED

JUN 07 2010

OFFICE OF PETITIONS

RENNER KENNER GREIVE BOBAK TAYLOR & WEBER
FIRST NATIONAL TOWER FOURTH FLOOR
106 S. MAIN STREET
AKRON OH 44308

In re Application of :
Wesley F. Rager :
Application No.: 11/066,918 : ON PETITION
Filed: February 24, 2005 :
Attorney Docket No: GOJ.P.131

This is a decision on the petition under 37 CFR 1.137(b), filed March 12, 2010, to revive the above-identified application.

The petition is **GRANTED**.

This application became abandoned for failure to respond in a timely and proper manner to the final Office action mailed January 3, 2008. The notice set a shortened statutory period for reply of three-months from its mailing date. Extensions of time were available pursuant to 37 CFR 1.136(a). The application became abandoned on April 4, 2008. A Notice of Abandonment was mailed on August 20, 2008.

The Request for Continued Examination filed March 12, 2010, is noted.

The application file is being forwarded to Technology Center 3700, GAU 3754 for further processing.

Telephone inquiries concerning this decision should be directed to the undersigned at (571) 272-3222.

Kenya A. McLaughlin
Petitions Attorney
Office of Petitions

UNITED STATES PATENT AND TRADEMARK OFFICE

Commissioner for Patents
United States Patent and Trademark Office
P.O. Box 1450
Alexandria, VA 22313-1450
www.uspto.gov

COPY MAILED

JUN 23 2008

QUAN NI
431 W. MAIN ST.
SPARTANBURG, SC 29301

In re Application of	:	
Weng Fei WONG et al.	:	
Application No. 11/066,919	:	DECISION ON PETITION
Filed: February 25, 2005	:	
Attorney Docket No. **70041640-1**	:	

This is a decision on the renewed petition under the unintentional provisions of 37 CFR 1.137(b), filed May 02, 2008, to revive the above-identified application.

The petition is **GRANTED**.

The application became abandoned for failure to reply in a timely manner to the non-final Office action mailed, July 25, 2007, which set a shortened statutory period for reply of three (3) months. No extensions of time under the provisions of 37 CFR 1.136(a) were obtained. Accordingly, the application became abandoned on October 26, 2007.

The petition satisfies the requirements of 37 CFR 1.137(b) in that petitioner has supplied (1) the reply in the form of an amendment; (2) the petition fee of $1,540.00; and (3) a proper statement of unintentional delay. Accordingly, the reply to the non-final Office action of July 25, 2007 is accepted as having been unintentionally delayed.

It is not apparent whether the person signing the statement of unintentional delay was in a position to have firsthand or direct knowledge of the facts and circumstances of the delay at issue. Nevertheless, such statement is being treated as having been made as the result of a reasonable inquiry into the facts and circumstances of such delay. See 37 CFR 10.18(b) and Changes to Patent Practice and Procedure; Final Rule Notice, 62 Fed. Reg. 53131, 53178 (October 10, 1997), 1203 Off. Gaz. Pat. Office 63, 103 (October 21, 1997). In the event that such an inquiry has not been made, petitioner must make such an inquiry. If such inquiry results in the discovery that it is not correct that the entire delay in filing the required reply from the due date for the reply until the filing of a grantable petition pursuant to 37 CFR 1.137(b) was unintentional, petitioner must notify the Office.

There is no indication that the person signing the petition was ever given a power of attorney to prosecute the application. If the person signing the petition desires to receive future correspondence regarding this application, the appropriate power of attorney document must be submitted. While a courtesy copy of this decision is being mailed to the person signing the petition, all future correspondence will be directed to the address currently of record until appropriate instructions are received.

The application file is being referred to Technology Center AU 3618 for appropriate action on the concurrently filed amendment.

Telephone inquiries concerning this decision should be directed to the undersigned at (571) 272- 4231.

Michelle R. Eason
Paralegal Specialist
Office of Petitions

Cc: **MARK WILSON**
WILSON AND HAM
2530 BERRYESSA RD
PMB 348
SAN JOSE, CA 95132

UNITED STATES PATENT AND TRADEMARK OFFICE

UNITED STATES DEPARTMENT OF COMMERCE
United States Patent and Trademark Office
Address: COMMISSIONER FOR PATENTS
P.O. Box 1450
Alexandria, Virginia 22313-1450
www.uspto.gov

CRAIN, CATON & JAMES
FIVE HOUSTON CENTER
1401 MCKINNEY, 17TH FLOOR
HOUSTON, TX 77010

Mail Date: 04/20/2010

Applicant	: Brian Iske	: DECISION ON REQUEST FOR
Patent Number	: 7584581	: RECALCULATION of PATENT
Issue Date	: 09/08/2009	: TERM ADJUSTMENT IN VIEW
Appliction No	: 11/066,927	: OF WYETH AND NOTICE OF INTENT TO
Filed	: 02/25/2005	: ISSUE CERTIFICATE OF CORRECTION
		:

The Request for Recalculation is **GRANTED** to the extent indicated.

The patent term adjustment has been determined to be **786** days. The USPTO will *sua sponte* issue a certificate of correction reflecting the amount of PTA days determined by the recalculation.

Prior to the issuance of the certificate of correction, the USPTO will afford patentee an opportunity to be heard and request reconsideration. Accordingly, patentee has **one month or thirty (30) days**, whichever is longer, to file a request for reconsideration of this patent term adjustment calculation. See 35 U.S.C. 154(b)(3)(B)(ii) and 37 CFR 1.322(a)(4). No extensions of time will be granted under 37 CFR 1.136.

Patentee should use document code PET.OP if electronically filing a request for reconsideration of this patent term adjustment calculation. The patentee must also include the information required by 37 CFR 1.705(b)(2) and the fee required by 37 CFR 1.18(e). If patentee does not file a timely request for reconsideration of this patent term adjustment calculation including the information required by 37 CFR 1.705(b)(2) and the fee required by 37 CFR 1.18(e), the USPTO will issue a certificate of correction reflecting the PTA determination noted above.

Patentee should be aware that in order to preserve the right to review in the United States District Court for the District of Columbia of the USPTO patent term adjustment determination, patentee must ensure that he or she also take the steps required under 35 U.S.C. 154(b)(4)(A) in a timely manner. Nothing in the request for recalculation should be construed as providing an alternative time frame for commencing a civil action under 35 U.S.C. 154(b)(4)(A).

Any questions concerning this decision should be directed to the Office of Patent Legal Administration at 571-272-7702.

UNITED STATES PATENT AND TRADEMARK OFFICE

UNITED STATES DEPARTMENT OF COMMERCE
United States Patent and Trademark Office
Address: COMMISSIONER FOR PATENTS
P.O. Box 1450
Alexandria, Virginia 22313-1450
www.uspto.gov

CRAIN, CATON & JAMES
FIVE HOUSTON CENTER
1401 MCKINNEY, 17TH FLOOR
HOUSTON, TX 77010

Mail Date: 05/17/2010

Applicant : Brian Iske
Patent Number : 7584581
Issue Date : 09/08/2009
Application No : 11/066,927
Filed : 02/25/2005

: NOTICE CONCERNING IMPROPER
: CALCULATION OF PATENT TERM
: ADJUSTMENT BASED UPON USPTO
: IMPROPERLY MEASURING REDUCTION
: PERIOD UNDER 37 CFR 1.704(c)(10).

The United States Patent and Trademark Office (USPTO) discovered that in processing the recent recalculation decisions mailed in response to patentee's filed Request for Recalculation of Patent Term Adjustment in view of Wyeth, the USPTO improperly measured the reduction period for reductions under 37 CFR 1.704(c)(10). Pursuant to 37 CFR 1.704(c)(10), patentee's reduction begins on the date of filing the amendment under 37 CFR 1.312 ("1.312 amendment") or other related paper and ends on the date that the Office mails a response to the filing of the 1.312 amendment or other paper. It has been discovered that during the recalculation, the calculation failed to the limit the reduction to the mail date of the response to the 1.312 amendment or other paper. Accordingly, patentee's reductions were greater than warranted.

This notice **VACATES** the previous GRANTED request for recalculation and provides patentee with a revised GRANTED recalculation.

The patent term adjustment has been determined to be **834** days. The USPTO will *sua sponte* issue a certificate of correction reflecting the amount of patent term adjustment (PTA) days determined by the recalculation.

Prior to the issuance of the certificate of correction, the USPTO will afford patentee an opportunity to be heard and request reconsideration. Accordingly, patentee has **one month or thirty (30) days** from the mail date of this notice, whichever is longer, to file a request for reconsideration of this PTA calculation. See 35 U.S.C. § 154(b)(3)(B)(ii) and 37 CFR 1.322(a)(4).

Patentee should use document code PET.OP if electronically filing a request for reconsideration of this PTA calculation. The patentee must also include the information required by 37 CFR 1.705(b)(2), and the fee required by 37 CFR 1.18(e). If patentee does not file a timely request for reconsideration of this PTA calculation, including the information required by 37 CFR 1.705(b)(2) and the fee required by 37 CFR 1.18(e), the USPTO will issue a certificate of correction reflecting the PTA determination noted above.

Patentee should be aware that in order to preserve the right of review of the USPTO's PTA determination in the United States District Court for the District of Columbia, patentee must ensure that the steps required under 35 U.S.C. § 154 (b)(4) are taken in a timely manner. Nothing in the request for recalculation should be construed as providing an alternative time frame for commencing a civil action under 35 U.S.C. § 154(b)(4).

UNITED STATES PATENT AND TRADEMARK OFFICE

Commissioner for Patents
United States Patent and Trademark Office
P.O. Box 1450
Alexandria, VA 22313-1450
www.uspto.gov

COPY MAILED

AUG 14 2006

OFFICE OF PETITIONS

Ilya Zborovsky
6 Schoolhouse Way
Dix Hills, NY 11746

In re Application of	:	
Eugene Ettlinger	:	
Application No. 11/066,942	:	DECISION ON PETITION
Filed: February 26, 2005	:	TO MAKE SPECIAL UNDER
Attorney Docket No. 0001-01-01	:	37 CFR 1.102(c)(1)
	:	

This is a decision on the petition under 37 CFR 1.102(c)(1), filed September 4, 2005, to make the above-identified application special based on applicant's age as set forth in M.P.E.P. § 708.02, Section IV.

The petition is **GRANTED**.

A grantable petition to make an application special under 37 CFR 1.102(c)(1) and MPEP § 708.02, Section IV: Applicant's Age, must be accompanied by evidence showing that at least one of the applicants is 65 years of age, or more, such as a birth certificate or a statement by applicant. No fee is required.

The instant petition includes a copy the applicant's driver's license attesting that he is over 65 years of age. Accordingly, the above-identified application has been accorded "special" status.

Telephone inquiries concerning this decision should be directed to Terri Williams at 571-272-2991.

All other inquiries concerning either the examination or status of the application should be directed to the Technology Center.

The application is being forwarded to the Technology Center Art Unit 3635 for action on the merits commensurate with this decision.

for David Bucci
Petitions Examiner
Office of Petitions

UNITED STATES PATENT AND TRADEMARK OFFICE

Commissioner for Patents
United States Patent and Trademark Office
P.O. Box 1450
Alexandria, VA 22313-1450
www.uspto.gov

September 2005

HUSAM BANDAK
4241 MARSTON LANE
SANTA CLARA, CA 95054

SEP 0 7 2005

In re Application of: HUSAM BANDAK Serial No.: 11/066,947 Filed: 25 February 2005 Title: ADVERTISING DISPLAY SYSTEM AND METHOD	DECISION ON PETITION TO MAKE SPECIAL UNDER 37 C.F.R. § 1.102(d)

This is a decision on the petition filed on April 5, 2005, to make the above-identified application special under the accelerated examination procedure set forth in MPEP § 708.02(VIII) in accordance with 37 C.F.R. § 1.102(d).

The petition to make the application special is **GRANTED**.

In support of the petition, petition provides: a) the applicable petition fee; b) a statement that a pre-examination search was made, including the search areas; c) a statement that all claims are directed towards a single invention; and d) a detailed discussion of each of a number of references submitted as being pertinent to patentability, pointing out how the claimed subject matter is distinguishable over those references.

For accelerated examination under MPEP § 708.02(VIII) in accordance with 37 C.F.R. § 1.102(d), a petition with the following showing is required: a) a petition fee; b) all claims are directed to a single invention; c) a statement that a pre-examination search was made, including the search areas; d) a copy of each of the (non-US) references deemed most closely related to the claimed subject matter; and e) a detailed discussion of the references pointing out with the particularity required by 37 CFR 1.111 (b) and (c), how the claimed subject matter is distinguishable over the references.

The requirements of MPEP § 708.02(VIII)(a) – (e) are considered to have been met. The application will be advanced out of turn for examination, and will continue to be treated as special throughout the entire prosecution in the Office according to the procedure set forth in MPEP § 708.02(VIII). Any restriction later required by the Office must be responded with an election without traverse by applicant as a condition for the application retaining its special status.

The application file is being forwarded to the examiner for expedited prosecution.

If the examiner can make this application special without prejudice to any possible interfering applications, and he/she should make a rigid search for such, he/she is authorized to do so for the next action. Should the application be rejected, the application will not be considered special for the subsequent action unless the applicant promptly makes a bona fide effort to place the application in condition for allowance, even if it is necessary to have an interview with the examiner to accomplish this purpose.

If the examiner finds any interfering application for the same subject matter, he/she should consider such application simultaneously with this application and should state in the official letter of such application that he/she is taking it out of its turn because of possible interference.

Should an appeal be taken in this application or should this application becomes involved in an interference, consideration of the appeal and the interference will be expedited by all Patent and Trademark Office officials concerned, contingent likewise upon diligent prosecution by the applicant.

After allowance, this application will be given priority for printing. See M.P.E.P. § 1309.

Any inquiry regarding this decision should be directed to Hien H. Phan, Special Program Examiner, at (571) 272-1606.

Hien H. Phan, Special Program Examiner
Technology Center 2800 - Semiconductors,
Electrical & Optical Systems & Components

UNITED STATES PATENT AND TRADEMARK OFFICE

UNITED STATES DEPARTMENT OF COMMERCE
United States Patent and Trademark Office
Address: COMMISSIONER FOR PATENTS
P.O. Box 1450
Alexandria, Virginia 22313-1450
www.uspto.gov

HITACHI GLOBAL STORAGE TECHNOLOGIES, INC.
5600 COTTLE ROAD, NHGB/0142
IP DEPARTMENT
SAN JOSE, CA 95193

Mail Date: 04/26/2010

Applicant	: Yuhsuke Matsumoto	: DECISION ON REQUEST FOR
Patent Number	: 7583475	: RECALCULATION of PATENT
Issue Date	: 09/01/2009	: TERM ADJUSTMENT IN VIEW
Application No	: 11/066,949	: OF WYETH AND NOTICE OF INTENT TO
Filed	: 02/25/2005	: ISSUE CERTIFICATE OF CORRECTION
		:

The Request for Recalculation is **GRANTED** to the extent indicated.

The patent term adjustment has been determined to be **1222** days. The USPTO will *sua sponte* issue a certificate of correction reflecting the amount of PTA days determined by the recalculation.

Prior to the issuance of the certificate of correction, the USPTO will afford patentee an opportunity to be heard and request reconsideration. Accordingly, patentee has **one month or thirty (30) days**, whichever is longer, to file a request for reconsideration of this patent term adjustment calculation. See 35 U.S.C. 154(b)(3)(B)(ii) and 37 CFR 1.322(a)(4). No extensions of time will be granted under 37 CFR 1.136.

Patentee should use document code PET.OP if electronically filing a request for reconsideration of this patent term adjustment calculation. The patentee must also include the information required by 37 CFR 1.705(b)(2) and the fee required by 37 CFR 1.18(e). If patentee does not file a timely request for reconsideration of this patent term adjustment calculation including the information required by 37 CFR 1.705(b)(2) and the fee required by 37 CFR 1.18(e), the USPTO will issue a certificate of correction reflecting the PTA determination noted above.

Patentee should be aware that in order to preserve the right to review in the United States District Court for the District of Columbia of the USPTO patent term adjustment determination, patentee must ensure that he or she also take the steps required under 35 U.S.C. 154(b)(4)(A) in a timely manner. Nothing in the request for recalculation should be construed as providing an alternative time frame for commencing a civil action under 35 U.S.C. 154(b)(4)(A).

Any questions concerning this decision should be directed to the Office of Patent Legal Administration at 571-272-7702.

UNITED STATES PATENT AND TRADEMARK OFFICE

Commissioner for Patents
United States Patent and Trademark Office
P.O. Box 1450
Alexandria, VA 22313-1450
www.uspto.gov

APPLICATION NUMBER	FILING/RECEIPT DATE	FIRST NAMED APPLICANT	ATTORNEY DOCKET NUMBER
11/066,962	02/25/2006	Rafael Carbunaru	40328-0007 (AB-245U)

STEVEN L. NICHOLS
RADER, FISHMAN & GRAVER PLLC
10653 S. RIVER FRONT PARKWAY
SUITE 150
SOUTH JORDAN UT 84095

DATE MAILED: August 3, 2006

DECISION GRANTING PETITION UNDER 37 CFR 1.138(d)
The declaration of/ express abandonment is recognized

This is in response to the petition under 37 CFR 1.138(d) filed on July 21, 2006, requesting for a refund of any previously paid search fee and excess claims fee in the above-identified application.

The petition is granted.

The express abandonment is recognized. Any previously paid search fee and excess claims fee are hereby refunded.

Any inquiries concerning this decision should be directed to the Pre-Grant Publication Division at (703) 605-4283.

Barbara J. Debnam
Pre-Grant Publication Division

UNITED STATES PATENT AND TRADEMARK OFFICE

Commissioner for Patents
United States Patent and Trademark Office
P.O. Box 1450
Alexandria, VA 22313-1450
www.uspto.gov

NOV 30 2005

FISH & NEAVE IP GROUP
ROPES & GRAY LLP
ONE INTERNATIONAL PLACE
BOSTON MA 02110-2624

In re Application of :	:
Benkovic et al.	:
Serial No.: 11/066,967	: PETITION TO MAKE SPECIAL
Filed: February 25, 2005	:
Attorney Docket No.: EPTM-P04-001	:

This is in response to applicants' petition filed February 25, 2005, to make the above-identified application special under the provisions of 37 CFR 1.102(d), based on applicants who are small entities having applications relating to biotechnology. The delay in responding to this petition is regretted.

Applicants have satisfied the provisions set forth in M.P.E.P. 708.02, XII (A), (B), and (C). The $130.00 petition fee as required by 37 CFR 1.17(h) was charged to applicants' Deposit Account No. 18-1945, as authorized. Therefore, the petition is **GRANTED**.

Should there be any questions with regard to this letter please contact Marianne C. Seidel by letter addressed to the Director, Technology Center 1600, PO BOX 1450, ALEXANDRIA, VA 22313-1450, or by telephone at 571-272-0584 or by facsimile transmission to the general Office facsimile number.

Marianne C. Seidel
Special Program Examiner
Technology Center 1600

UNITED STATES PATENT AND TRADEMARK OFFICE

COMMISSIONER FOR PATENTS
UNITED STATES PATENT AND TRADEMARK OFFICE
P.O. BOX 1450
ALEXANDRIA, VA 22313-1450
www.uspto.gov

COPY MAILED

AUG 3 1 2009

OFFICE OF PETITIONS

FOLEY & LARDNER LLP
150 EAST GILMAN STREET
P.O. BOX 1497
MADISON WI 53701-1497

In re Application	:
Marchionini, et al.	:
Application No. 11/066,974	: PATENT TERM ADJUSTMENT
Filed: February 25, 2005	:
Dkt. No.: 047940-0249	:

This is in response to the "REQUEST FOR RECONSIDERATION OF PATENT TERM ADJUSTMENT UNDER 37 C.F.R. § 1.705(b)," filed June 9, 2009. Applicants submit that the correct patent term adjustment to be indicated on the patent is 998 days, not 426 days as calculated by the Office as of the mailing of the initial determination of patent term adjustment. Applicant requests this correction on the sole basis that the Office will take in excess of three years to issue this patent.

As the instant application for patent term adjustment requests reconsideration of the patent term adjustment as it relates to the Office's failure to issue the patent within 3 years of the filing date, the application for patent term adjustment under 37 CFR 1.705(b) is DISMISSED as PREMATURE.

Knowledge of the actual date the patent issues is required to calculate the amount, if any, of additional patent term patentee is entitled to for Office failure to issue the patent within 3 years. See, § 1.702(b). (This is true even where a request for continued examination (RCE) was filed). The computer will not undertake the § 1.702(b) calculation until the actual date of issuance of the patent has been determined. Likewise, the computer will not calculate any further Office delay under § 1.702(a)(4) or applicant delay under § 1.704(c)(10) until the actual date of issuance of the patent has been determined. As such, the Office can not make a determination on the correctness of the patent term adjustment until the patent has issued.

Requesting reconsideration of the patent term adjustment to be indicated on the patent under 37 CFR 1.705(b) based on the initial determination of patent term adjustment and a projected issuance date of the patent (or even the filing date of the request for continued examination) is premature. Accordingly, it is appropriate to dismiss as premature such a request.

Rather than file an application for patent term adjustment under 37 CFR 1.705(b) contesting the 37 CFR 1.702(b) calculation at the time of the mailing of the notice of allowance, applicant is advised that they may wait until the time of the issuance of the patent and file a request for reconsideration of the patent term adjustment pursuant to 37 CFR 1.705(d). As the USPTO does

not calculate the amount of time earned pursuant to 37 CFR 1.702(b) until the time of the issuance of the patent, the Office will consider any request for reconsideration of the patent term adjustment due to an error in the calculation of 37 CFR 1.702(b) to be timely if the request for reconsideration is filed within two months of the issuance of the patent. However, as to all other bases for contesting the initial determination of patent term adjustment received with the notice of allowance, applicant must timely file an application for patent term adjustment prior to the payment of the issue fee[1].

The patent term adjustment application fee of $200.00 is hereby acknowledged. See, 37 CFR 1.18(e).

Any request for reconsideration of the patent term adjustment indicated on the patent must be timely filed within 2 months after issuance pursuant to 37 CFR 1.705(d) and must include payment of the required fee under 37 CFR 1.18(e).

The Office of Data Management has been advised of this decision. This application is being referred to the Office of Data Management for issuance of the patent.

Telephone inquiries specific to this decision should be directed to the undersigned at (571) 272-3205.

Alesia M. Brown
Petitions Attorney
Office of Petitions

[1] For example, if applicant disputes both the calculation of patent term adjustment under 37 CFR 1.702(a)(1) for Office failure to mail a first Office action or notice of allowance not later than fourteen months after the date on which the application was filed and under 37 CFR 1.702(b) for Office failure to issue a patent within three years of the actual filing date of the application, then applicant must still timely file an application for patent term adjustment prior to the payment of the issue fee to contest the calculation of Office delay in issuing a first Office action or notice of allowance. See 37 CFR 1.705(b) and 35 U.S.C. 154(b)(3)(B). A dispute as to the calculation of the §1.702(a)(1) period raised on request for reconsideration of patent term adjustment under 37 CFR 1.705(d) will be dismissed as untimely filed.

UNITED STATES PATENT AND TRADEMARK OFFICE

Commissioner for Patents
United States Patent and Trademark Office
P.O. Box 1450
Alexandria, VA 22313-1450
www.uspto.gov

MAILED

MAR 15 2010

OFFICE OF PETITIONS

FOLEY & LARDNER LLP
150 EAST GILMAN STREET
P.O. BOX 1497
MADISON WI 53701-1497

In re Patent No. 7,595,295
Issued: September 29, 2009
Application No. 11/066,974
Filed: February 25, 2005
Dkt. No.: 047940-0249

: DECISION ON APPLICATION FOR
: PATENT TERM ADJUSTMENT and
: NOTICE OF INTENT TO ISSUE
: CERTIFICATE OF CORRECTION
:

This is a decision on the petition for reconsideration of patent term adjustment under 37 CFR 1.705(d), filed October 2, 2009. Patentees request that the patent term adjustment indicated on the above-identified patent be corrected to indicate that the term of the above-identified patent is extended or adjusted by 892 days.

The petition to correct the patent term adjustment indicated on the above-identified patent is **GRANTED**.

Patentees also request that a decision on this request for reconsideration of patent term adjustment be deferred or delayed. There is no specific regulatory provision for requesting that a petition under 37 CFR 1.705(d) be held in abeyance. Accordingly, the request to hold in abeyance a decision on the merits of the instant application for patent term adjustment is **DISMISSED**.

The application is being forwarded to the Certificate of Corrections Branch for issuance of a certificate of correction. The Office will issue a certificate of correction indicating that the term of the above-identified patent is extended or adjusted by 892 days.

The Office acknowledges receipt of the submission of the $200.00 fee set forth in 37 CFR 1.18(e). No additional fees are required.

Telephone inquiries specific to this matter should be directed to the undersigned at (571) 272-3205.

/ALESIA M. BROWN/

Alesia M. Brown
Senior Petitions Attorney
Office of Petitions

Enclosure: Copy of DRAFT Certificate of Correction

UNITED STATES PATENT AND TRADEMARK OFFICE

CERTIFICATE OF CORRECTION

PATENT : 7,595,295 B2

DATED : **September 29, 2009** **DRAFT**

INVENTOR(S) : Marchionini, et al.

It is certified that error appears in the above-identified patent and that said Letters Patent is hereby corrected as shown below:

On the cover page,

[*] Notice: Subject to any disclaimer, the term of this patent is extended or adjusted under 35 USC 154(b) by 469 days

Delete the phrase "by 469 days" and insert – by 892 days--

UNITED STATES PATENT AND TRADEMARK OFFICE

Commissioner for Patents
United States Patent and Trademark Office
P.O. Box 1450
Alexandria, VA 22313-1450
www.uspto.gov

Fish & Richardson P.C.
225 Franklin Street
Boston, MA 02110

COPY MAILED

JUL 1 0 2008

OFFICE OF PETITIONS

In re Application of	:	
Todd K. Whitehurst, et al.	:	
Application No. 11/066,993	:	DECISION ON PETITION
Filed: February 25, 2005	:	TO WITHDRAW
Attorney Docket No. 3013-0013 (05-01163-01)	:	FROM RECORD
	:	

This is a decision on the Request to Withdraw as attorney or agent under 37 C.F.R. § 1.36(b) or 37 C.F.R. § 10.40 filed February 15, 2008.

The request is **NOT APPROVED**.

A review of the file record indicates that Bryant R. Gold and Laura Haburay Bishop does not have power of attorney in this patent application nor is there any statement or evidence of record of employment in or otherwise being engaged in the proceedings in this patent application. Accordingly, the request to withdraw under 37 C.F.R. § 1.36(b) is not applicable.

All future communications from the Office will continue to be directed to the below-listed address until otherwise properly notified by the applicant.

Telephone inquires concerning this decision should be directed to Terri Williams at 571-272-2991.

Terri Williams
Petitions Examiner
Office of Petitions

cc: **Advantedge Law Group, LLC**
3301 N. University Avenue
Suite 200
Provo, UT 84604

UNITED STATES PATENT AND TRADEMARK OFFICE

Commissioner for Patents
United States Patent and Trademark Office
P.O. Box 1450
Alexandria, VA 22313-1450
www.uspto.gov

JAGTIANI + GUTTAG
10363-A DEMOCRACY LANE
FAIRFAX VA 22030

MAILED

MAR 30 2009

OFFICE OF PETITIONS

In re Application of	:	
COLE, Michael C. et al.	:	
Application No. 11/067,010	:	DECISION ON PETITION
Filed: February 28, 2005	:	TO WITHDRAW
Attorney Docket No. **INPH-0003-UT1**	:	FROM RECORD
	:	

This is a decision on the Request to Withdraw as attorney or agent of record under 37 C.F.R. § 1.36(b), filed November 17, 2008.

The request is **NOT APPROVED** because it is moot.

A review of the file record indicates that the power of attorney filed March 06, 2009 reinstates Steven B. Kelber, Registration No. 30,073, as an attorney of record in the above patent application. Accordingly, the request to withdraw under 37 C.F.R. § 1.36(b) is moot.

All future communications from the Office will continue to be directed to the above-listed address until otherwise notified by applicant.

Telephone inquires concerning this decision should be directed to Michelle R. Eason at 571-272-4231.

Michelle R. Eason
Paralegal Specialist
Office of Petitions

UNITED STATES PATENT AND TRADEMARK OFFICE

COMMISSIONER FOR PATENTS
UNITED STATES PATENT AND TRADEMARK OFFICE
P.O. BOX 1450
ALEXANDRIA, VA 22313-1450
www.uspto.gov

L.C. Begin & Associates, PLLC
PMB 403
510 Highland Avenue
Milford, MI 48381

COPY MAILED

MAY 06 2005

OFFICE OF PETITIONS

In re Application of
Bruce A. Stevens
Application No. 11/067,027
Filed: February 25, 2005
Attorney Docket No. 5702-01073

DECISION GRANTING PETITION

This is a decision on the petition filed April 15, 2005 requesting that the above-identified application be accorded a filing date of February 25, 2005, instead of the presently accorded date of February 26, 2005. The petition is being treated under 37 CFR 1.10(d).

Petitioner maintains that the application was deposited in Express Mail service with the U. S. Postal Service, on February 25, 2005. However, the USPS incorrectly entered the "date-in" as February 26, 2005. Pursuant to 37 CFR 1.10(d), applicant petitions the Commissioner to accord a filing date for the above-identified application as of the actual date of deposit with the USPS. In support, petitioners provided, inter alia, a copy of the Express Mail label, receipt No. EV616440103US and a copy of the USPS Track/Confirm record for the package in question. It is noted that the transmittal letter found in the file includes the same Express Mail receipt number.

Paragraph (d) of 37 CFR 1.10 states that:

> Any person filing correspondence under this section that was received by the Office and delivered by the "Express Mail Post Office to Addressee" service of the USPS, who can show that the "date-in" on the "Express Mail" mailing label or other official notation entered by the USPS was incorrectly entered or omitted by the USPS, may petition the Commissioner to accord the correspondence a filing date as of the date the correspondence is shown to have been deposited with the USPS, provided that:
>
> (1) The petition is filed promptly after the person becomes aware that the Office has accorded, or will accord, a filing date based upon an incorrect entry by the USPS;
>
> (2) The number of the "Express Mail" mailing label was placed on the paper(s) or fee(s) that constitute the correspondence prior to the original mailing by "Express Mail"; and
>
> (3) The petition includes a showing which establishes, to the satisfaction of the Commissioner, that the requested filing date was the date the correspondence was deposited in "Express Mail Post Office to Addressee" service prior to the last scheduled pickup for that day. Any showing pursuant to this paragraph must be corroborated by evidence from the USPS or that came into being after deposit and within one business day

> of the deposit of the correspondence in the "Express Mail Post Office to Addressee" service of the USPS. Any statement submitted in support of such a showing pursuant to this paragraph must be a verified statement if made by a person other than an employee of the USPS or a practitioner as defined in ' 10.1(r) of this chapter.

Preliminarily, it is concluded that the petition was filed promptly within the meaning of §1.10(d)(1). The evidence of record further shows that the number of the "Express Mail" mailing label, EV616440103US, is on the correspondence of record presently accorded a filing date of February 26, 2005, and thus, was placed on the correspondence prior to the original mailing.

Finally, the USPS Track and Confirm record corroborates a "date-in" of February 25, 2005, as it shows that the "Express Mail" package bearing mailing label No. EV616440103US was accepted at the USPS located in Redford, MI 48239 at 11:42pm on February 25, 2005.

The petition is GRANTED.

The application is being returned to the Office of Initial Patent Examination (OIPE) for correction of the filing date to **February 25, 2005** and for issuance of a Corrected Filing Receipt.

Telephone inquires related to this decision should be directed to the undersigned at (571) 272-3204. Telephone inquiries related to OIPE processing should be directed to their hotline at (703) 308-1202.

Sherry D. Brinkley
Petitions Examiner
Office of Petitions
Office of the Deputy Commissioner
for Patent Examination Policy

UNITED STATES PATENT AND TRADEMARK OFFICE

COMMISSIONER FOR PATENTS
UNITED STATES PATENT AND TRADEMARK OFFICE
P.O. BOX 1450
ALEXANDRIA, VA 22313-1450
www.uspto.gov

L.C. Begin & Associates, PLLC
PMB 403
510 Highland Avenue
Milford, MI 48381

COPY MAILED

MAY 06 2005

OFFICE OF PETITIONS

In re Application of
Paresh S. Khandbadia, et al.
Application No. 11/067,028
Filed: February 25, 2005
Attorney Docket No. 5702-01074

DECISION GRANTING PETITION

This is a decision on the petition filed April 15, 2005 requesting that the above-identified application be accorded a filing date of February 25, 2005, instead of the presently accorded date of February 26, 2005. The petition is being treated under 37 CFR 1.10(d).

Petitioner maintains that the application was deposited in Express Mail service with the U. S. Postal Service, on February 25, 2005. However, the USPS incorrectly entered the "date-in" as February 26, 2005. Pursuant to 37 CFR 1.10(d), applicants petition the Commissioner to accord a filing date for the above-identified application as of the actual date of deposit with the USPS. In support, petitioners provided, inter alia, a copy of the Express Mail label, receipt No. EV616440063US and a copy of the USPS Track/Confirm record for the package in question. It is noted that the transmittal letter found in the file includes the same Express Mail receipt number.

Paragraph (d) of 37 CFR 1.10 states that:

> Any person filing correspondence under this section that was received by the Office and delivered by the "Express Mail Post Office to Addressee" service of the USPS, who can show that the "date-in" on the "Express Mail" mailing label or other official notation entered by the USPS was incorrectly entered or omitted by the USPS, may petition the Commissioner to accord the correspondence a filing date as of the date the correspondence is shown to have been deposited with the USPS, provided that:
>
> (1) The petition is filed promptly after the person becomes aware that the Office has accorded, or will accord, a filing date based upon an incorrect entry by the USPS;
>
> (2) The number of the "Express Mail" mailing label was placed on the paper(s) or fee(s) that constitute the correspondence prior to the original mailing by "Express Mail"; and
>
> (3) The petition includes a showing which establishes, to the satisfaction of the Commissioner, that the requested filing date was the date the correspondence was deposited in "Express Mail Post Office to Addressee" service prior to the last scheduled pickup for that day. Any showing pursuant to this paragraph must be corroborated by evidence from the USPS or that came into being after deposit and within one business day

> of the deposit of the correspondence in the "Express Mail Post Office to Addressee" service of the USPS. Any statement submitted in support of such a showing pursuant to this paragraph must be a verified statement if made by a person other than an employee of the USPS or a practitioner as defined in ' 10.1(r) of this chapter.

Preliminarily, it is concluded that the petition was filed promptly within the meaning of §1.10(d)(1). The evidence of record further shows that the number of the "Express Mail" mailing label, EV616440063US, is on the correspondence of record presently accorded a filing date of February 26, 2005, and thus, was placed on the correspondence prior to the original mailing.

Finally, the USPS Track and Confirm record corroborates a "date-in" of February 25, 2005, as it shows that the "Express Mail" package bearing mailing label No. EV616440063US was accepted at the USPS located in Redford, MI 48239 at 11:44pm on February 25, 2005.

The petition is GRANTED.

The application is being returned to the Office of Initial Patent Examination (OIPE) for correction of the filing date to **February 25, 2005** and for issuance of a Corrected Filing Receipt.

Telephone inquires related to this decision should be directed to the undersigned at (571) 272-3204. Telephone inquiries related to OIPE processing should be directed to their hotline at (703) 308-1202.

Sherry D. Brinkley

Sherry D. Brinkley
Petitions Examiner
Office of Petitions
Office of the Deputy Commissioner
for Patent Examination Policy

UNITED STATES PATENT AND TRADEMARK OFFICE

UNITED STATES DEPARTMENT OF COMMERCE
United States Patent and Trademark Office
Address: COMMISSIONER FOR PATENTS
P.O. Box 1450
Alexandria, Virginia 22313-1450
www.uspto.gov

APPL NO.	FILING OR 371 (c) DATE	ART UNIT	FIL FEE REC'D	ATTY.DOCKET NO	DRAWINGS	TOT CLMS	IND CLMS
11/067,028	02/25/2005	3616	1000	5702-01074	6	5	3

CONFIRMATION NO. 8301

CORRECTED FILING RECEIPT

OC000000015983593

L.C. Begin & Associates, PLLC
PMB 403
510 Highland Avenue
Milford, MI 48381

Date Mailed: 05/10/2005

Receipt is acknowledged of this regular Patent Application. It will be considered in its order and you will be notified as to the results of the examination. Be sure to provide the U.S. APPLICATION NUMBER, FILING DATE, NAME OF APPLICANT, and TITLE OF INVENTION when inquiring about this application. Fees transmitted by check or draft are subject to collection. Please verify the accuracy of the data presented on this receipt. **If an error is noted on this Filing Receipt, please mail to the Commissioner for Patents P.O. Box 1450 Alexandria Va 22313-1450. Please provide a copy of this Filing Receipt with the changes noted thereon. If you received a "Notice to File Missing Parts" for this application, please submit any corrections to this Filing Receipt with your reply to the Notice. When the USPTO processes the reply to the Notice, the USPTO will generate another Filing Receipt incorporating the requested corrections (if appropriate).**

Applicant(s)

Paresh S. Khandhadia, Troy, MI;
Bruce A. Stevens, Oakland, MI;

Power of Attorney:

Dennis Scheer--39356
Laurence Begin--42310

Domestic Priority data as claimed by applicant

This appln claims benefit of 60/548,252 02/27/2004

Foreign Applications

If Required, Foreign Filing License Granted: 03/23/2005

The country code and number of your priority application, to be used for filing abroad under the Paris Convention, is US11/067,028

Projected Publication Date: 09/01/2005

Non-Publication Request: No

Early Publication Request: No

Title

Side curtain air bag device

Preliminary Class

280

LICENSE FOR FOREIGN FILING UNDER
Title 35, United States Code, Section 184
Title 37, Code of Federal Regulations, 5.11 & 5.15

GRANTED

The applicant has been granted a license under 35 U.S.C. 184, if the phrase "IF REQUIRED, FOREIGN FILING LICENSE GRANTED" followed by a date appears on this form. Such licenses are issued in all applications where the conditions for issuance of a license have been met, regardless of whether or not a license may be required as set forth in 37 CFR 5.15. The scope and limitations of this license are set forth in 37 CFR 5.15(a) unless an earlier license has been issued under 37 CFR 5.15(b). The license is subject to revocation upon written notification. The date indicated is the effective date of the license, unless an earlier license of similar scope has been granted under 37 CFR 5.13 or 5.14.

This license is to be retained by the licensee and may be used at any time on or after the effective date thereof unless it is revoked. This license is automatically transferred to any related applications(s) filed under 37 CFR 1.53(d). This license is not retroactive.

The grant of a license does not in any way lessen the responsibility of a licensee for the security of the subject matter as imposed by any Government contract or the provisions of existing laws relating to espionage and the national security or the export of technical data. Licensees should apprise themselves of current regulations especially with respect to certain countries, of other agencies, particularly the Office of Defense Trade Controls, Department of State (with respect to Arms, Munitions and Implements of War (22 CFR 121-128)); the Office of Export Administration, Department of Commerce (15 CFR 370.10 (j)); the Office of Foreign Assets Control, Department of Treasury (31 CFR Parts 500+) and the Department of Energy.

NOT GRANTED

No license under 35 U.S.C. 184 has been granted at this time, if the phrase "IF REQUIRED, FOREIGN FILING LICENSE GRANTED" DOES NOT appear on this form. Applicant may still petition for a license under 37 CFR 5.12, if a license is desired before the expiration of 6 months from the filing date of the application. If 6 months has lapsed from the filing date of this application and the licensee has not received any indication of a secrecy order under 35 U.S.C. 181, the licensee may foreign file the application pursuant to 37 CFR 5.15(b).

UNITED STATES PATENT AND TRADEMARK OFFICE

UNITED STATES DEPARTMENT OF COMMERCE
United States Patent and Trademark Office
Address: COMMISSIONER FOR PATENTS
P.O. Box 1450
Alexandria, Virginia 22313-1450
www.uspto.gov

APPLICATION NO.	FILING DATE	FIRST NAMED INVENTOR	ATTORNEY DOCKET NO.	CONFIRMATION NO.
11/067,035	02/24/2005	Paul Martinelli	INTR0007	8292

22862 7590 04/23/2010
GLENN PATENT GROUP
3475 EDISON WAY, SUITE L
MENLO PARK, CA 94025

EXAMINER
KAMAL, SHAHID

ART UNIT	PAPER NUMBER
3714	

NOTIFICATION DATE	DELIVERY MODE
04/23/2010	ELECTRONIC

Please find below and/or attached an Office communication concerning this application or proceeding.

The time period for reply, if any, is set in the attached communication.

Notice of the Office communication was sent electronically on above-indicated "Notification Date" to the following e-mail address(es):

eptomatters@glenn-law.com

UNITED STATES PATENT AND TRADEMARK OFFICE

Commissioner for Patents
United States Patent and Trademark Office
P.O. Box 1450
Alexandria, VA 22313-1450
www.uspto.gov

GLENN PATENT GROUP
3475 EDISON WAY, SUITE L
MENLO PARK CA 94025

In re Application of:
MARTINELLI, PAUL et al
Serial No.: 11/067,035
Filed: Feb. 24, 2005
Docket: INTR0007
Title: METHOD AND SYSTEM FOR SUBSCRIPTION-BASED, ENTITLEMENT-DRIVEN LICENSE KEY GENERATION AND DISTRIBUTION FOR DIGITAL GOODS

DECISION ON PETITION TO ENTER AMENDMENT AFTER FINAL OFFICE ACTION

This is a decision on the petition filed on May 27, 2009 to enter the Rule 116 amendment filed on March 6, 2009. This petition is being considered pursuant to 37 CFR §1.181. No fee is required.

The petition is **DISMISSED as untimely**.

The examiner issued a final Office action on January 7, 2009 rejecting all claims in the case. In response to the office action, on March 6, 2009 the applicant filed a Rule 116 Amendment making substantive amendments to independent claims 1, 18, 28 and 48. On March 19, 2009, the examiner issued an Advisory Action informing the applicant that the amendments raised new issues that would require further consideration and search. (See Paragraphs 3 and 11 of the Advisory Action). In response, on April 1, 2009, a Notice of Appeal was filed. On May 27, 2009, the current petition to request entry of the Rule 116 amendment was filed. On June 1, 2009, the Appeal Brief was also filed. In response to the defective Appeal Brief Notice of November 16, 2009, the applicant filed a substitute or corrected Appeal Brief on January 21, 2010.

The petitioner's request to enter the Rule 116 Amendment of March 6, 2009 was based on the belief that the amendment would improve the form of the claims, make clerical improvements to the specification and correct a claim dependency error. Petitioner opines that the claim amendments change the format and grammar of the claims, but not meaning. The amendments to

the specification are merely clerical. One of the amendments merely seeks to correct claim dependency. Petitioner does not believe the amended claims require any substantial work on the part of the examiner. Therefore, the examiner's refusal to enter the Rule 116 Amendment of March 6, 2009 should not stand.

Applicable Rules or Statutes

37 CFR 1.181(f):
The mere filing of a petition will not stay any period for reply that may be running against the application, nor act as a stay of other proceedings. Any petition under this part not filed within two months of the mailing date of the action or notice from which relief is requested may be dismissed as untimely, except as otherwise provided. This two-month period is not extendable.

Review of the record shows that the instant petition was after the Notice of Appeal of April 1, 2009. The Notice of Appeal indicates that the applicant has chosen to appeal the claims under the final rejection. Furthermore, the petition was also filed more than two months after the mailing date of the Advisory Action of March 19, 2009. Pursuant to 37 CFR 1.181(f), the petition is not timely filed since the petition was not filed within two months of the action complained of. As the petition was not timely filed, the relief requested will not be granted. Petitioner is entitled to request reconsideration of this decision provided that the request for reconsideration is filed within two months of the date of this decision.

The application is being forwarded to the examiner via the Supervisory Patent Examiner of Art Unit 3714 for further preparation of an Examiner's Answer. Any inquiry regarding this decision should be directed to Henry Yuen, Special Program Examiner, at (571) 272-4856.

PETITION DISMISSED AS UNTIMELY

Robert Olszewski, Director
Technology Center 3700

UNITED STATES PATENT AND TRADEMARK OFFICE

UNITED STATES DEPARTMENT OF COMMERCE
United States Patent and Trademark Office
Address: COMMISSIONER FOR PATENTS
P.O. Box 1450
Alexandria, Virginia 22313-1450
www.uspto.gov

SCHWEGMAN, LUNDBERG & WOESSNER, P.A.
P.O. BOX 2938
MINNEAPOLIS, MN 55402

Mail Date: 04/20/2010

Applicant	: Zeeshan Naseh	: DECISION ON REQUEST FOR
Patent Number	: 7609619	: RECALCULATION of PATENT
Issue Date	: 10/27/2009	: TERM ADJUSTMENT IN VIEW
Appliction No	: 11/067,037	: OF WYETH AND NOTICE OF INTENT TO
Filed	: 02/25/2005	: ISSUE CERTIFICATE OF CORRECTION
		:

The Request for Recalculation is **GRANTED** to the extent indicated.

The patent term adjustment has been determined to be **1032** days. The USPTO will *sua sponte* issue a certificate of correction reflecting the amount of PTA days determined by the recalculation.

Prior to the issuance of the certificate of correction, the USPTO will afford patentee an opportunity to be heard and request reconsideration. Accordingly, patentee has **one month or thirty (30) days**, whichever is longer, to file a request for reconsideration of this patent term adjustment calculation. See 35 U.S.C. 154(b)(3)(B)(ii) and 37 CFR 1.322(a)(4). No extensions of time will be granted under 37 CFR 1.136.

Patentee should use document code PET.OP if electronically filing a request for reconsideration of this patent term adjustment calculation. The patentee must also include the information required by 37 CFR 1.705(b)(2) and the fee required by 37 CFR 1.18(e). If patentee does not file a timely request for reconsideration of this patent term adjustment calculation including the information required by 37 CFR 1.705(b)(2) and the fee required by 37 CFR 1.18(e), the USPTO will issue a certificate of correction reflecting the PTA determination noted above.

Patentee should be aware that in order to preserve the right to review in the United States District Court for the District of Columbia of the USPTO patent term adjustment determination, patentee must ensure that he or she also take the steps required under 35 U.S.C. 154(b)(4)(A) in a timely manner. Nothing in the request for recalculation should be construed as providing an alternative time frame for commencing a civil action under 35 U.S.C. 154(b)(4)(A).

Any questions concerning this decision should be directed to the Office of Patent Legal Administration at 571-272-7702.

UNITED STATES PATENT AND TRADEMARK OFFICE

Commissioner for Patents
United States Patent and Trademark Office
P.O. Box 1450
Alexandria, VA 22313-1450
www.uspto.gov

FERNANDEZ & ASSOCIATES LLP
1047 EL CAMINO REAL, SUITE 201
MENLO PARK, CA 94025

COPY MAILED

MAY 09 2007

OFFICE OF PETITIONS

In re Application of	:	
TIAN, Hui	:	
Application No. 11/067,039	:	DECISION ON PETITION
Filed: February 25, 2005	:	TO WITHDRAW
Attorney Docket No. 79981-203101/US	:	FROM RECORD
	:	

This is a decision on the Request to Withdraw as attorney or agent of record under 37 C.F.R. § 1.36(b), filed December 4, 2006.

The request is **NOT APPROVED** as moot.

A review of the file record indicates that the power of attorney to Dennis S. Fernandez of FERNANDEZ & ASSOCIATES LLP has been revoked by the assignee of the patent application on August 14, 2006 and re-submitted August 24, 2006. Accordingly, the request to withdraw under 37 C.F.R. § 1.36(b) is moot.

All future communications from the Office will continue to be directed to the below-listed address until otherwise notified by applicant.

Telephone inquires concerning this decision should be directed to the undersigned at 571-272-7253.

Monica A. Graves
Petitions Examiner
Office of Petitions

cc: **GREENBERG TRAURIG LLP (SV2)**
2450 COLORADO AVENUE, SUITE 400E
SANTA MONICA, CA 90404

UNITED STATES PATENT AND TRADEMARK OFFICE

COMMISSIONER FOR PATENTS
UNITED STATES PATENT AND TRADEMARK OFFICE
P.O. BOX 1450
ALEXANDRIA, VA 22313-1450
www.uspto.gov

L.C. BEGIN & ASSOCIATES, PLLC
510 HIGHLAND AVENUE
PMB 403
MILFORD, MI 48381

COPY MAILED

JUN 22 2005

OFFICE OF PETITIONS

In re Application of	:	
Sean P. Burns et al	:	
Application No. 11/067,040	:	DECISION DISMISSING
Filed: February 25, 2005	:	PETITION
Attorney Docket No. 5702-01075	:	

This is a decision on the petition filed April 15, 2005 and supplemented on May 25, 2005, requesting that the above-identified application be accorded a filing date of February 25, 2005.

The petition is dismissed as **MOOT** since the application has been accorded a filing date of February 25, 2005.

Office records do reflect a filing date of February 25, 2005, for the instant application. A corrected filing receipt was mailed on June 3, 2005.

Telephone inquiries should be directed to the undersigned at (571) 272-3208.

This matter is being referred to Technology Center AU 3616 for examination in due course.

Karen Creasy

Karen Creasy
Petitions Examiner
Office of Petitions
Office of the Deputy Commissioner
For Patent Examination Policy

UNITED STATES PATENT AND TRADEMARK OFFICE

Commissioner for Patents
United States Patent and Trademark Office
P.O. Box 1450
Alexandria, VA 22313-1450 ARENT FOX LLP
1050 CONNECTICUT AVENUE, N.W.
SUITE 400
WASHINGTON DC 20036
www.uspto.gov

MORGAN & FINNEGAN, L.L.P.
3 WORLD FINANCIAL CENTER
NEW YORK NY 10281-2101

COPY MAILED

MAY 21 2008

OFFICE OF PETITIONS

In re Patent No. 7,295,284 :
Issue Date: November 13, 2007 :
Application No. 11/067,072 :
Filed: February 25, 2005 :
Attorney Docket No. 1232-5620 :

ON PETITION

This is a decision on the petition filed January 30, 2008, which is being treated as a request under 37 CFR 3.81(b)[1] to add the name of an assignee on the front page of the above-identified patent by way of a Certificate of Correction.

The request is **GRANTED**.

Telephone inquiries concerning this decision may be directed to Carl Friedman at (571) 272-6842. Inquiries regarding the issuance of a certificate of correction should be directed to the Certificate of Correction Branch at (571) 272-4200.

The Certificates of Correction Branch will be notified of this decision granting the petition under 37 CFR 3.81(b) and directing issuance of the requested Certificate of Correction.

The application is being referred to Technology Center Art Unit 2851 for consideration of the Certificate of Correction request in regard to the"(76) inventor" change.

Carl Friedman
Petitions Examiner
Office of Petitions

---

[1] *See* MPEP 1309, subsection II; and Official Gazette of June 22, 2004.

UNITED STATES PATENT AND TRADEMARK OFFICE

Commissioner for Patents
United States Patent and Trademark Office
P.O. Box 1450
Alexandria, VA 22313-1450
www.uspto.gov

BLACK LOWE & GRAHAM PLLC
701 FIFTH AVENUE, SUITE 4800
SEATTLE, WA 98104

COPY MAILED
MAY 27 2005
OFFICE OF PETITIONS

In re Application of :
Guard, et al. :
Application No. 11/067,076 :
Filed: February 25, 2005 :
Attorney Docket No. BING-1-1165 :

ON PETITION

This is a decision on the papers styled, "Petition Under 37 CFR 1.17(f)," filed May 12, 2005, which has been treated as a petition under 37 CFR 1.53, requesting that the above-identified application be accorded a filing date of February 25, 2005, including four (4) sheet of drawings.

The application was submitted on February 25, 2005. However, on April 29, 2005, the Office of Initial Patent Examination (OIPE) mailed a "Notice Of Incomplete Nonprovisional Application" (Notice) that stated the application had not been accorded a filing date, and that the application was deposited without drawings.

In response, on May 12, 2005, the instant petition was submitted. Petitioner argues that four (4) sheets of drawings were filed on February 25, 2005. In support, the instant petition is accompanied by a copy of applicants' postcard receipt that acknowledges receipt of "4 Sheets of Formal Drawings" on February 25, 2005. A review of the application file indicates the presence of zero (0) sheets of drawings filed on February 25, 2005. It is assumed that missing sheets of drawings were misplaced by the Office.

In view of the above, the petition is granted.

The $400.00 petition fee will be refunded to deposit account no. 50-1050.

This application will be returned to OIPE for further processing with a filing date of February 25, 2005, using the four (4) sheets of drawings, supplied on May 12, 2005.

Telephone inquiries regarding this decision should be directed to the undersigned at (571) 272-3228.

Edward J. Tannouse
Petitions Attorney
Office of Petitions/Patent
United States Patent and Trademark Office

UNITED STATES PATENT AND TRADEMARK OFFICE

Commissioner for Patents
United States Patent and Trademark Office
P.O. Box 1450
Alexandria, VA 22313-1450
www.uspto.gov

HICKMAN PALERMO TRUONG & BECKER LLP/APPLE INC.
2055 GATEWAY PLACE
SUITE 550
SAN JOSE CA 95110-1083

MAILED

NOV 18 2009

OFFICE OF PETITIONS

In re Application of	:	
Shyh-Shiaw Kuo et al	:	
Application No. 11/067,080	:	DECISION ON PETITION
Filed: February 25, 2005	:	
Attorney Docket No. 11/067,080	:	

This is a decision on the petition under 37 CFR 1.314, filed November 13, 2009, to defer issuance of the patent.

The petition is **GRANTED**.

Issuance will be deferred for a period of one month from the date of this decision. At the end of this period, the application will be referred to Data Management to be processed into a patent.

If an additional deferral period is required, another petition and fee should be promptly submitted. The petition must include a showing of extraordinary circumstances. See MPEP 1306.01.

Further correspondence with respect to this matter should be delivered through one of the following mediums:

By mail: Mail Stop PETITIONS
Commissioner for Patents
Post Office Box 1450
Alexandria, VA 22313-1450

By hand:	Customer Service Window Mail Stop Petitions Randolph Building 401 Dulany Street Alexandria, VA 22314
By fax:	(571) 273-8300 ATTN: Office of Petitions
By internet:	EFS-Web www.uspto.gov/ebc/efs_help.html (for help using EFS-Web call the Patent Electronic Business Center at (866) 217-9197)

Any questions concerning this matter may be directed to the undersigned at (571) 272-3208.

/KOC/
Karen Creasy
Petitions Examiner
Office of Petitions

UNITED STATES PATENT AND TRADEMARK OFFICE

UNITED STATES DEPARTMENT OF COMMERCE
United States Patent and Trademark Office
Address: COMMISSIONER FOR PATENTS
P.O. Box 1450
Alexandria, Virginia 22313-1450
www.uspto.gov

HICKMAN PALERMO TRUONG & BECKER LLP/Apple Inc.
2055 GATEWAY PLACE
SUITE 550
SAN JOSE, CA 95110-1083

Mail Date: 04/21/2010

Applicant	: Shyh-shiaw Kuo	: DECISION ON REQUEST FOR
Patent Number	: 7634413	: RECALCULATION of PATENT
Issue Date	: 12/15/2009	: TERM ADJUSTMENT IN VIEW
Appliction No	: 11/067,080	: OF WYETH AND NOTICE OF INTENT TO
Filed	: 02/25/2005	: ISSUE CERTIFICATE OF CORRECTION
		:

The Request for Recalculation is **GRANTED** to the extent indicated.

The patent term adjustment has been determined to be **1297** days. The USPTO will *sua sponte* issue a certificate of correction reflecting the amount of PTA days determined by the recalculation.

Prior to the issuance of the certificate of correction, the USPTO will afford patentee an opportunity to be heard and request reconsideration. Accordingly, patentee has **one month or thirty (30) days**, whichever is longer, to file a request for reconsideration of this patent term adjustment calculation. See 35 U.S.C. 154(b)(3)(B)(ii) and 37 CFR 1.322(a)(4). No extensions of time will be granted under 37 CFR 1.136.

Patentee should use document code PET.OP if electronically filing a request for reconsideration of this patent term adjustment calculation. The patentee must also include the information required by 37 CFR 1.705(b)(2) and the fee required by 37 CFR 1.18(e). If patentee does not file a timely request for reconsideration of this patent term adjustment calculation including the information required by 37 CFR 1.705(b)(2) and the fee required by 37 CFR 1.18(e), the USPTO will issue a certificate of correction reflecting the PTA determination noted above.

Patentee should be aware that in order to preserve the right to review in the United States District Court for the District of Columbia of the USPTO patent term adjustment determination, patentee must ensure that he or she also take the steps required under 35 U.S.C. 154(b)(4)(A) in a timely manner. Nothing in the request for recalculation should be construed as providing an alternative time frame for commencing a civil action under 35 U.S.C. 154(b)(4)(A).

Any questions concerning this decision should be directed to the Office of Patent Legal Administration at 571-272-7702.

UNITED STATES PATENT AND TRADEMARK OFFICE

Commissioner for Patents
United States Patent and Trademark Office
P.O. Box 1450
Alexandria, VA 22313-1450
www.uspto.gov

Heller, Ehrman, LLP
4350 La Jolla Village Drive #700
7th Floor
San Diego, CA 92122

COPY MAILED

JUN 0 4 2009

OFFICE OF PETITIONS

In re Application of	:	
Adam Harris et al.	:	
Application No. 11/067,100	:	DECISION ON PETITION
Filed: February 25, 2005	:	TO WITHDRAW
Attorney Docket No. 37090-2054	:	FROM RECORD
	:	

This is a decision on the Request to Withdraw as attorney or agent of record under 37 C.F.R. § 1.36(b), filed March 9, 2006.

The request is **moot because a revocation of power of attorney has been filed.**

A review of the file record indicates that the power of attorney to Alan C. Gordon and all attorneys/agents of record has been revoked by the assignee of the patent application on March 16, 2006. Accordingly, the request to withdraw under 37 C.F.R. § 1.36(b) is moot.

All future communications from the Office will continue to be directed to the below-listed address until otherwise notified by applicant.

Telephone inquires concerning this decision should be directed to Kimberly Inabinet at 571-272-4618.

Kimberly Inabinet
Petitions Examiner
Office of Petitions

cc: CARR & FERRELL LLP
2200 GENG ROAD
PALO ALTO CA 94303

UNITED STATES PATENT AND TRADEMARK OFFICE

Commissioner for Patents
United States Patent and Trademark Office
P.O. Box 1450
Alexandria, VA 22313-1450
www.uspto.gov
OIW 08-05

SPRINT
6391 SPRINT PARKWAY
KSOPHT0101-Z2100
OVERLAND PARK KS 66251-2100

COPY MAILED

AUG 19 2005

OFFICE OF PETITIONS

In re Application of :
Kevin Hansen :
Application No. 11/066,042 :
Filed: February 24, 2005 :
Attorney Docket No. 3003 :
: ON PETITION
In re Application of :
Kevin Hansen :
Application No. 11/067,162 :
Filed: February 24, 2005 :
Attorney Docket No. 3002 :

This is a decision on the petitions filed on April 8, 2005 and August 9, 2005 which are being treated as petitions under 37 CFR 1.182 to correct the files of the above-identified applications.

Applicant request that the drawings filed in Application No. 11/066,042 on February 24, 2005, be transferred to the file of Application No. 11/067,162 and that the drawings filed in Application No. 11/067,162 on February 24, 2005, be transferred to the file of Application No. 11/066,042 and that the applications be accorded filing dates of February 24, 2005, with the drawings as part of the original disclosures.

Applicant's attorney, Stephen Roche, explained that the specification for Application No. 11/066,042 were inadvertently filed with the drawings for Application No. 11/067,162, and that the specification for Application No. 11/067,162 was inadvertently filed with the drawings for Application No. 11/066,042.

The Office notes that the specification for Application No. 11/066,042 references Figures 1-9, while drawing Figures 1-7 were filed therewith. Conversely, the specification for Application No. 11/067,162 references Figures 1-7 while drawing Figures 1-9 were filed therewith.

It is obvious that neither application was individually complete on the date of deposit, *i.e.*, on February 24, 2005, since the drawings described in the specifications were not received with the respective specifications. However, in light of the contents of the brief descriptions of the drawings contained in the specifications of the respective applications, the evidence is persuasive that the drawings were misfiled.

Further, since the drawings were in fact present in the USPTO on February 24, 2005, the applications may be accorded filing dates of February 24, 2005, on petition under 37 CFR 1.182.

The seven (7) sheets of drawings filed on February 24, 2005, in Application No. 11/066,042 will be removed and transferred to Application No. 11/067,162.

The nine (9) sheets of drawings filed on February 24, 2005 in Application No. 11/067,162 will be removed and transferred to Application No. 11/066,042.

Application No. 11/066,042 will be reprocessed with the nine (9) sheets of transferred drawings, containing Figures 1-9 filed on February 24, 2005.

Application No. 11/067,162 will be reprocessed with the seven (7) sheets of transferred drawings, containing Figures 1-7 filed on February 24, 2005.

The petition is **granted** to the extent indicated above.

As this petition was necessitated by applicants' filing error, the petition fee will not be refunded.

Application No. 11/066,042 is being forwarded to the Office of Initial Patent Examination for reprocessing with a filing date of **February 24, 2005**, using the nine (9) sheets of drawings containing Figures 1-9 filed on February 24, 2005.

Application No. 11/067,162 is being forwarded to the Office of Initial Patent Examination for reprocessing with a filing date of **February 24, 2005**, using the seven (7) sheets of drawings containing Figures 1-7 filed on February 24, 2005.

Telephone inquiries concerning this matter may be directed to the undersigned at (571)272-3215.

Charlema R. Grant

Charlema R. Grant
Petition Attorney
Office of Petitions

UNITED STATES PATENT AND TRADEMARK OFFICE

Commissioner for Patents
United States Patent and Trademark Office
P.O. Box 1450
Alexandria, VA 22313-1450
www.uspto.gov

ROBERT O. BLINN
P.O. BOX 75144
WICHITA KS 67275-0144

COPY MAILED

JAN 1 1 2008

OFFICE OF PETITIONS

In re Application of :
Pravin Kulkami et al. :
Application No. 11/067,176 :
Filed: February 28, 2005 :
Attorney Docket No. 05204 :

ON PETITION

This is a decision on the petition under 37 CFR 1.137(b), filed October 9, 2007, to revive the above-identified application.

The petition is **GRANTED**.

The above-identified application became abandoned for failure to submit the issue fee in a timely manner in reply to the Notice of Allowance mailed June 28, 2007, which set a statutory period for reply of three (3) months. Accordingly, by operation of law, the above-identified application became abandoned on September 29, 2007.

The petition satisfies the conditions for revival pursuant to the provisions of 37 CFR 1.137(b) in that (1) the reply in the form of the issue fee; (2) the petition fee of $1,540; and (3) the required statement of unintentional delay have been received. Accordingly, the issue fee is accepted as having been unintentionally delayed.

Telephone inquiries concerning this decision should be directed to Carl Friedman at (571) 272-6842.

The application file is being referred to the Office of Patent Publication.

David Bucci
Petitions Examiner
Office of Petitions

UNITED STATES PATENT AND TRADEMARK OFFICE

UNITED STATES DEPARTMENT OF COMMERCE
United States Patent and Trademark Office
Address: COMMISSIONER FOR PATENTS
P.O. Box 1450
Alexandria, Virginia 22313-1450
www.uspto.gov

BIRCH STEWART KOLASCH & BIRCH
PO BOX 747
FALLS CHURCH, VA 22040-0747

Mail Date: 04/21/2010

Applicant	: Naoki Kubo	: DECISION ON REQUEST FOR
Patent Number	: 7626629	: RECALCULATION of PATENT
Issue Date	: 12/01/2009	: TERM ADJUSTMENT IN VIEW
Appliction No	: 11/067,203	: OF WYETH AND NOTICE OF INTENT TO
Filed	: 02/28/2005	: ISSUE CERTIFICATE OF CORRECTION
		:

The Request for Recalculation is **GRANTED** to the extent indicated.

The patent term adjustment has been determined to be **263** days. The USPTO will *sua sponte* issue a certificate of correction reflecting the amount of PTA days determined by the recalculation.

Prior to the issuance of the certificate of correction, the USPTO will afford patentee an opportunity to be heard and request reconsideration. Accordingly, patentee has **one month or thirty (30) days**, whichever is longer, to file a request for reconsideration of this patent term adjustment calculation. See 35 U.S.C. 154(b)(3)(B)(ii) and 37 CFR 1.322(a)(4). No extensions of time will be granted under 37 CFR 1.136.

Patentee should use document code PET.OP if electronically filing a request for reconsideration of this patent term adjustment calculation. The patentee must also include the information required by 37 CFR 1.705(b)(2) and the fee required by 37 CFR 1.18(e). If patentee does not file a timely request for reconsideration of this patent term adjustment calculation including the information required by 37 CFR 1.705(b)(2) and the fee required by 37 CFR 1.18(e), the USPTO will issue a certificate of correction reflecting the PTA determination noted above.

Patentee should be aware that in order to preserve the right to review in the United States District Court for the District of Columbia of the USPTO patent term adjustment determination, patentee must ensure that he or she also take the steps required under 35 U.S.C. 154(b)(4)(A) in a timely manner. Nothing in the request for recalculation should be construed as providing an alternative time frame for commencing a civil action under 35 U.S.C. 154(b)(4)(A).

Any questions concerning this decision should be directed to the Office of Patent Legal Administration at 571-272-7702.

UNITED STATES PATENT AND TRADEMARK OFFICE

COMMISSIONER FOR PATENTS
UNITED STATES PATENT AND TRADEMARK OFFICE
P.O. BOX 1450
ALEXANDRIA, VA 22313-1450
www.uspto.gov

RALPH A. DOWELL OF DOWELL & DOWELL P.C.
2111 EISENHOWER AVE
SUITE 406
ALEXANDRIA, VA 22314

COPY MAILED
AUG 0 9 2006
OFFICE OF PETITIONS

In re Application of	:	
Yasuhiro Tamura	:	
Application No. 11/067,210	:	ON PETITION
Filed: February 28, 2005	:	
Attorney Docket No.: 14986CON	:	

This is a decision on the petition, filed August 9, 2006, under 37 CFR 1.313(c)(2) to withdraw the above-identified application from issue after payment of the issue fee.

The petition is **GRANTED**.

The above-identified application is withdrawn from issue for consideration of a submission under 37 CFR 1.114 (request for continued examination). See 37 CFR 1.313(c)(2).

Petitioner is advised that the issue fee paid on June 23, 2006, in the above-identified application cannot be refunded. If, however, the above-identified application is again allowed, petitioner may request that it be applied towards the issue fee required by the new Notice of Allowance. [1]

Telephone inquiries relating to this decision should be directed to the undersigned at (571) 272-3204.

The application is being referred to Technology Center AU 2859 for further processing of the request for continued examination under 37 CFR 1.114.

Sherry D. Brinkley
Petitions Examiner
Office of Petitions

[1]The request to apply the issue fee to the new Notice may be satisfied by completing and returning the new Issue Fee Transmittal Form PTOL-85(b), which includes the following language thereon: " Commissioner for Patents is requested to apply the Issue Fee and Publication Fee (if any) or re-apply any previously paid issue fee to the application identified above." Petitioner is advised that, whether a fee is indicated as being due or not, the Issue Fee Transmittal Form **must** be completed and timely submitted to avoid abandonment. Note the language in bold text on the first page of the Notice of Allowance and Fee(s) Due (PTOL-85).

UNITED STATES PATENT AND TRADEMARK OFFICE

Commissioner for Patents
United States Patent and Trademark Office
P.O. Box 1450
Alexandria, VA 22313-1450
www.uspto.gov

Date : August 9, 2006

TO : Director, Office of Patent Publication

FROM : Office of the Deputy Commissioner for Patent Examination Policy

SUBJECT : Withdrawal from Issue of

Applicant(s) : Yasuhiro Tamura
Application No. : 11/067,210
Filed : February 28, 2005

The above-identified application has been assigned Patent No. 7,089,675 and an issue date of August 15, 2006.

It is hereby directed that this application be withdrawn from issue at the request of the applicant.

Do not refund the issue fee.

The following erratum should be published in the Official Gazette if the above-identified application is published in the OG of August 8, 2006:

> "All reference to Patent No. 7,089,675 to YASUHIRO TAMURA of JAPAN for MOBILE TERMINAL APPARATUS appearing in the Official Gazette of August 8, 2006, should be deleted since no patent was granted."

Sherry D. Brinkley
Petitions Examiner
Office of Petitions

cc: Paul Harrison, Crystal Park 3-44I (FAX-306-2737)
Deneise Boyd, Crystal Park 2, Suite 1100 (FAX-308-5413)
Mary Louise McAskill, Crystal Park 3-910 (FAX 305-4372)
Niomi Farmer, Crystal Park 3-9I0 (FAX-305-4372)
Mary E. Johnson (Cookie), P/OCS, CM1-6D07
Duane K.Davis, P/OCS, CM1-6A07
Tamara K. Greene, PK3-910

UNITED STATES PATENT AND TRADEMARK OFFICE

UNITED STATES DEPARTMENT OF COMMERCE
United States Patent and Trademark Office
Address: COMMISSIONER FOR PATENTS
P.O. Box 1450
Alexandria, Virginia 22313-1450
www.uspto.gov

INTEL CORPORATION
c/o CPA Global
P.O. BOX 52050
MINNEAPOLIS, MN 55402

Mail Date: 04/21/2010

Applicant	: Mousumi Hazra	: DECISION ON REQUEST FOR
Patent Number	: 7580364	: RECALCULATION of PATENT
Issue Date	: 08/25/2009	: TERM ADJUSTMENT IN VIEW
Appliction No	: 11/067,211	: OF WYETH AND NOTICE OF INTENT TO
Filed	: 02/25/2005	: ISSUE CERTIFICATE OF CORRECTION
		:

The Request for Recalculation is **GRANTED** to the extent indicated.

The patent term adjustment has been determined to be **1217** days. The USPTO will *sua sponte* issue a certificate of correction reflecting the amount of PTA days determined by the recalculation.

Prior to the issuance of the certificate of correction, the USPTO will afford patentee an opportunity to be heard and request reconsideration. Accordingly, patentee has **one month or thirty (30) days**, whichever is longer, to file a request for reconsideration of this patent term adjustment calculation. See 35 U.S.C. 154(b)(3)(B)(ii) and 37 CFR 1.322(a)(4). No extensions of time will be granted under 37 CFR 1.136.

Patentee should use document code PET.OP if electronically filing a request for reconsideration of this patent term adjustment calculation. The patentee must also include the information required by 37 CFR 1.705(b)(2) and the fee required by 37 CFR 1.18(e). If patentee does not file a timely request for reconsideration of this patent term adjustment calculation including the information required by 37 CFR 1.705(b)(2) and the fee required by 37 CFR 1.18(e), the USPTO will issue a certificate of correction reflecting the PTA determination noted above.

Patentee should be aware that in order to preserve the right to review in the United States District Court for the District of Columbia of the USPTO patent term adjustment determination, patentee must ensure that he or she also take the steps required under 35 U.S.C. 154(b)(4)(A) in a timely manner. Nothing in the request for recalculation should be construed as providing an alternative time frame for commencing a civil action under 35 U.S.C. 154(b)(4)(A).

Any questions concerning this decision should be directed to the Office of Patent Legal Administration at 571-272-7702.

UNITED STATES PATENT AND TRADEMARK OFFICE

Commissioner for Patents
United States Patent and Trademark Office
P.O. Box 1450
Alexandria, VA 22313-1450
www.uspto.gov

MARSHALL & MELHORN, LLC
FOUR SEAGATE
8TH FLOOR
TOLEDO OH 43804

COPY MAILED

DEC 12 2007

OFFICE OF PETITIONS

In re Application of
FRANK W. POPIELAS
Application No. 11/067,235
Filed: 02/25/2005
Attorney Docket No. 1-17739

DECISION ON PETITION

This is decision on the petition under 37 CFR 1.181, filed August 6, 2007, to withdraw the holding of abandonment. This is also a decision on the petition under 37 CFR 1.137(b), filed November 19, 2007.

On November 24, 2006, the Office mailed a Notice of Non-Compliant Amendment, setting a period of ONE MONTH or THIRTY DAYS from the mail date of the Notice, whichever was longer, to reply. Extensions of this time period were permitted under 37 CFR 1.136. On December 27, 2006 (certificate of mailing dated December 22, 2006), applicant filed a reply to the Notice of Non-Compliant Amendment. On April 6, 2007, the Office mailed a communication entitled Failure to Acceptably Respond to Notice of Non-Compliant Amendment (37 CFR 1.121) *No New Time Period for Reply is Provided*, indicating that the period for reply continued to run from the mail date of the prior Notice of Non-Compliant Amendment and that no new time period was being set. See MPEP 714.03. The Office communication of April 6, 2007, stated that if the period for reply set forth in the prior Notice of Non-Compliant Amendment of November 24, 2006, had expired, then the application would be considered abandoned unless applicant corrected the deficiency and obtained an extension of time under 37 CFR 1.136(a). Additionally, the Office communication of April 6, 2007, informed applicant that in no case could applicant reply outside the SIX (6) MONTH statutory period or obtain an extension for more than FIVE (5) MONTHS beyond the date for reply set forth in the prior Notice of Non-Compliant Amendment of November 24, 2006. Thus, applicant could have submitted a timely reply, accompanied by a request for an extension of time for response within the fifth month and fee, on or before May 24, 2007.

On May 10, 2007 (certificate of mailing dated May 7, 2007), applicant filed a second reply to the Notice of Non-Compliant Amendment. As applicant did not submit any request for an extension of time for response within the fifth month or an authorization to charge any necessary fee to a Deposit Account with the reply, the application became abandoned for failure to file a timely and proper reply to the Notice of Non-Compliant Amendment of November 24, 2006. On August 3, 2007, the Office mailed a Notice of Abandonment.

Petition Under 37 CFR 1.181:

As to the petition to withdraw the holding of abandonment, applicant's counsel asserted that he had a good faith and reasonable belief that he filed a timely response on May 10, 2007 (certificate of mailing dated May 7, 2007). Applicant's counsel averred that the Office communication of April 6, 2007, indicated on the cover page that applicant had 30 days from the mailing date of April 6, 2007, to reply. However, page two of the Office communication stated that the time for response continued to run from Notice of Non-Compliant Amendment mailed on November 24, 2006. Applicant's counsel argued that it was unclear to him if extension of time fees were due, or from what date they should be calculated.

Upon a review of the record, the Office communication of April 6, 2007, entitled Failure to Acceptably Respond to Notice of Non-Compliant Amendment (37 CFR 1.121) *No New Time Period for Reply is Provided*, specifically stated that the period for reply continued to run from the mailing date of the prior Notice of Non-Compliant Amendment and that no new time period for reply was being set. Furthermore, the Office communication of April 6, 2007, explained in great detail that applicant could obtain extensions of time to reply to avoid abandonment of the application. To overcome any ambiguity that may have existed and ensure pendency of the application, applicant could have submitted an authorization to charge the Deposit Account for any extensions of the period for reply. If applicant had submitted an authorization to charge any necessary fees with the reply of May 10, 2007, the application would not have become abandoned.

As applicant did not obtain any extensions of the time period for reply to the Notice of Non-Compliant Amendment of November 24, 2006, the application was properly held abandoned. Accordingly, the petition under 37 CFR 1.181 is **dismissed.**

Petition Under 37 CFR 1.137(b):

As to the petition under 37 CFR 1.137(b), the petition satisfies the requirements of 37 CFR 1.137(b) in that applicant has supplied (1) the reply in the form of an amendment on May 10, 2007; (2) the petition fee; and (3) a proper statement of unintentional delay. Accordingly, the petition under 37 CFR 1.137(b) is **granted**.

This matter is being referred to Technology Center Art Unit 3635 for review of the reply submitted on May 10, 2007.

Telephone inquiries related to this decision should be directed to the undersigned at (571) 272-3211.

C. T. Donnell

Christina Tartera Donnell
Senior Petitions Attorney
Office of Petitions

UNITED STATES PATENT AND TRADEMARK OFFICE

Commissioner for Patents
United States Patent and Trademark Office
P.O. Box 1450
Alexandria, VA 22313-1450
www.uspto.gov

PATRICIA M. COSTANZO
PATS PENDING
P.O. BOX 101
ELMA NY 14059

In re Application of:	:	
Aaron, Ben	:	
Serial No.: 11/067,238	:	
Filed: Feb. 26, 2005	:	
Docket: AaronS_P_1_05	:	
Title: MEANS AND METHOD FOR PRODUCING IMPROVED STRENGTH IN OBJECTS THAT MAY HAVE EXTREMELY DURABLE, WATER REPELLENT, SURE-GRIP GRIPPING SURFACES, AND THE OBJECTS SO IMPROVED	:	DECISION ON PETITION

This is a decision on the letter filed on May 13, 2008 seeking to withdraw the finality of the Office action mailed Feb. 12, 2008. The letter is treated as a petition to review office actions. This petition is being considered pursuant to 37 CFR §1.181. No fee is required.

The petition is **DISMISSED AS UNTIMELY**.

In the May 13, 2008 petition, the petitioner requests the finality of the Office action of Feb. 12, 2008 be withdrawn because the applicant was prevented from submission of any affidavits and/or declarations to overcome the rejection prematurely cut off in the prosecution of the application.

The record shows that:

1) On Feb. 14, 2007, the examiner mailed a non-final Office Action. Claims 16-20 were rejected under 35 U.S.C. 103 (a) as being unpatentable over Keeney in view of Lewark and Kobe. Claims 19 was rejected under 35 U.S.C. 103(a) as being unpatentable over Keeney in view of Souders and Kobe.
2) On May 14, 2007, the applicant submitted a Reply under 37 CFR 1.111 with no amendment to the claims and traversed the rejection. In addition, the applicant provided detail explanation regarding lack of teachings in prior art references when formulating the rejection of claims 16-20.
3) On Jul. 20, 2007, the examiner mailed a final Office action. The examiner again, rejected claims 16-20 under 35 U.S.C. 103(a) as being unpatentable over Keeney in view of Lewark and

Kobe. Claims 19 was again rejected under 35 U.S.C. 103(a) as being unpatentable over Keeney in view of Souders and Kobe. The examiner provided a more detail explanation in this final Office action.

4) On Oct. 19, 2007, the applicant submitted an amendment after final with more arguments to traverse the rejection. It is noted there was no amendment to the claims.

5) Dec. 13, 2008, the examiner mailed an advisory action advising the applicant that the amendment after final filed on Oct. 19, 2007 will be entered for appeal purposes.

6) Dec. 20, 2007, the applicant filed a RCE and a reply to the final Office action of Jul. 20, 2007. In support of the RCE, a submission was filed on Jan. 16, 2008. The submission contains no amendment to the clams except additional rebuttals in traversing the final rejection of Jul. 20, 2007.

7) Subsequently, on Feb. 21, 2008, the examiner promulgated an Office action and made it final because the unamended claims 16-20 are directed to the same invention as rejected under the previous final Office action of Jul. 20, 2007.

8) On May 13, 2008 the present petition was filed. Applicant requests that the finality of the final Office action be withdrawn so that the applicant may be provided with an opportunity to submit affidavits and/or declarations.

Discussion and Analysis

A review of the record shows that the instant petition was filed three months after the mailing date of the final Office action of Feb. 12, 2008. Pursuant to 37 CFR 1.181(f)[1], the petition is not timely filed since the petition was not filed within two months of the action complained of. As the petition was not timely filed, the requested withdrawal of finality of the Office action of Dec. 28, 2007 will not be granted.

With regard to the substantive arguments regarding the rejection of claims 16-20, the issues presented by petitioner are clearly directed to the propriety of the examiner's rejection of claims 16-20 under 35 USC § 103. The questions of whether the claims should be rejected under 35 USC § 103 or not is clearly an appealable issue under 37 CFR § 41.31(a) (1). According to 37 CFR § 1.181(a)(1)[2], it is clear that petitioner's arguments will not support the requested relief, because the relief requested is simply not the type of relief that can be obtained by petition. The propriety of a rejection of a claim, ultimately, is to be determined by the Board of Patent Appeals and Interferences in accordance with 37 CFR § 1.181(a) (1).

---

[1] 37 CFR 1.181(f): The mere filing of a petition will not stay any period for reply that may be running against the application, nor act as a stay of other proceedings. Any petition under this part not filed within two months of the mailing date of the action or notice from which relief is requested may be dismissed as untimely, except as otherwise provided. This two-month period is not extendable.

[2] 37 CFR § 1.181(a) (1) states: Petition may be taken to the Director: (1) From any action or requirement of any examiner in the ex parte prosecution of an application, or in the ex parte or inter partes prosecution of a reexamination proceeding which is not subject to appeal to the Board of Patent Appeals and Interferences or to the court.

Conclusion

In view of the record, petitioner's request to withdraw the finality of the Office action dated Feb. 12, 2008 is dismissed as untimely. Issues regarding the rejection of claims are appealable and will not be decided by petition.

Any request for reconsideration of this decision must be submitted within TWO (2) MONTHS from the mail date of this decision, 37 CFR 1.181(f). No extension of time under 37 CFR 1.136(a) is permitted. The reconsideration request should include a cover letter entitled "Renewed Petition under 37 CFR 1.181". The application is being forwarded to the Supervisory Patent Examiner of Art Unit 3711 for consideration of the amendment after final filed on May 12, 2008. Any inquiry regarding this decision should be directed to Henry Yuen, Special Programs Examiner, at (571) 272-4856.

PETITION DISMISSED AS UNTIMELY.

Karen M. Young, Director
Technology Center 3700

UNITED STATES PATENT AND TRADEMARK OFFICE

UNITED STATES DEPARTMENT OF COMMERCE
United States Patent and Trademark Office
Address: COMMISSIONER FOR PATENTS
P.O. Box 1450
Alexandria, Virginia 22313-1450
www.uspto.gov

CONLEY ROSE, P.C.
5601 GRANITE PARKWAY, SUITE 750
PLANO, TX 75024

Mail Date: 06/17/2010

Applicant	: Neil P. Adams	: DECISION ON REQUEST FOR
Patent Number	: 7664707	: RECALCULATION of PATENT
Issue Date	: 02/16/2010	: TERM ADJUSTMENT IN VIEW
Application No	: 11/067,239	: OF WYETH AND NOTICE OF INTENT TO
Filed	: 02/25/2005	: ISSUE CERTIFICATE OF CORRECTION
		:

The Request for Recalculation is **GRANTED** to the extent indicated.

The patent term adjustment has been determined to be **1011** days. The USPTO will *sua sponte* issue a certificate of correction reflecting the amount of PTA days determined by the recalculation.

Prior to the issuance of the certificate of correction, the USPTO will afford patentee an opportunity to be heard and request reconsideration. Accordingly, patentee has **one month or thirty (30) days**, whichever is longer, to file a request for reconsideration of this patent term adjustment calculation. See 35 U.S.C. 154(b)(3)(B)(ii) and 37 CFR 1.322(a)(4). No extensions of time will be granted under 37 CFR 1.136.

Patentee should use document code PET.OP if electronically filing a request for reconsideration of this patent term adjustment calculation. The patentee must also include the information required by 37 CFR 1.705(b)(2) and the fee required by 37 CFR 1.18(e). If patentee does not file a timely request for reconsideration of this patent term adjustment calculation including the information required by 37 CFR 1.705(b)(2) and the fee required by 37 CFR 1.18(e), the USPTO will issue a certificate of correction reflecting the PTA determination noted above.

Patentee should be aware that in order to preserve the right to review in the United States District Court for the District of Columbia of the USPTO patent term adjustment determination, patentee must ensure that he or she also take the steps required under 35 U.S.C. 154(b)(4)(A) in a timely manner. Nothing in the request for recalculation should be construed as providing an alternative time frame for commencing a civil action under 35 U.S.C. 154(b)(4)(A).

Any questions concerning this decision should be directed to the Office of Patent Legal Administration at 571-272-7702.

UNITED STATES PATENT AND TRADEMARK OFFICE

Commissioner for Patents
United States Patent and Trademark Office
P.O. Box 1450
Alexandria, VA 22313-1450
www.uspto.gov

DENNIS L. THOMTE
THOMTE, MAZOUR & NIEBERGALL
Suite 1111
2120 South 72nd Street
Omaha NE 68124

COPY MAILED
DEC 13 2006
OFFICE OF PETITIONS

In re Application of	:	
Spevak et al.	:	
Application No. 11/067,244	:	DECISION ON PETITION
Filed: February 24, 2005	:	TO MAKE SPECIAL UNDER
Attorney Docket No. JPAY-1	:	37 CFR 1.102(d)
	:	

This is a decision on the petition under 37 CFR §1.102(d), filed July 21, 2006, to make the above-identified application special based on actual infringement as set forth in M.P.E.P. § 708.02, Section II.

The petition is **DISMISSED.**

A grantable petition to make an application special under 37 CFR §1.102(d) and MPEP §708.02, Section II: Infringement, must be accompanied by the required fee pursuant to 37 CFR 1.17(h) and a statement by the applicant, assignee, or attorney/agent registered to practice before the office alleging:

(A) That there is an infringing device or product actually on the market or method in use;

(B) That a rigid comparison of the alleged infringing device, product, or method with the claims of the application has been made, and that, in his or her opinion, some of the claims are unquestionably infringed; and

(C) That he or she has made or caused to be made a careful and thorough search of the prior art or has a good knowledge of the pertinent prior art.

Applicant must provide one copy of each of the references deemed most closely related to the subject matter encompassed by the claims if said references are not already of record.

The instant petition fails to meet the requirements set forth above for special status because it lacks a statement that conforms to items (A) and (B), as noted above.

Further correspondence with respect to this matter should be addressed as follows:

By Mail: Mail Stop PETITION

Commissioner for Patents
P. O. Box 1450
Alexandria, VA 22313-1450

By hand: U. S. Patent and Trademark Office
Customer Service Window, Mail Stop Petitions
Randolph Building
401 Dulany Street
Alexandria, VA 22314

By FAX: (571) 273-8300

Telephone inquiries concerning this decision should be directed to Ramesh Krishnamurthy at 571-272-4914, or to the undersigned at 571-272-7099.

All other inquiries concerning either the examination or status of the application should be directed to the Technology Center.

The application is being forwarded to the Technology Center Art Unit 3752 for action in its regular turn.

David Bucci
Petitions Examiner
Office of Petitions

UNITED STATES PATENT AND TRADEMARK OFFICE

Commissioner for Patents
United States Patent and Trademark Office
P.O. Box 1450
Alexandria, VA 22313-1450
www.uspto.gov

DENNIS L. THOMTE
THOMTE, MAZOUR & NIEBERGALL
Suite 1111
2120 South 72nd Street
Omaha NE 68124

COPY MAILED

FEB 09 2007

OFFICE OF PETITIONS

In re Application of	:	
Spevak et al.	:	
Application No. 11/067,244	:	DECISION ON PETITION
Filed: February 24, 2005	:	TO MAKE SPECIAL UNDER
Attorney Docket No. 34114-pa 1	:	37 CFR 1.102(d)
	:	

This is a decision on the renewed petition under 37 CFR 1.102(d), filed December 26, 2006, to make the above-identified application special based on the accelerated examination procedure set forth in M.P.E.P. § 708.02, Section II: Infringement.

The petition is **GRANTED**.

A grantable petition to make an application special under 37 CFR 1.102(d) and MPEP § 708.02, Section II: Infringement, must be accompanied by the required fee pursuant to 37 CFR 1.17(h) and the filing of a petition accompanied by a statement by the applicant, assignee, or an attorney/agent registered to practice before the Office alleging:

(A) That there is an infringing device or product actually on the market or method in use;

(B) That a rigid comparison of the alleged infringing device, product, or method with the claims of the application has been made, and that, in his or her opinion, some of the claims are unquestionably infringed; and

(C) That he or she has made or caused to be made a careful and thorough search of the prior art or has a good knowledge of the pertinent prior art.

Applicant must provide one copy of each of the references deemed most closely related to the subject matter encompassed by the claims if said references are not already of record.

The petition complies with all the above stated requirements. Accordingly, the above-identified application has been accorded "special" status.

Telephone inquiries concerning this decision should be directed to Jefferey Harold at 571-272-7519, or the undersigned at 571-272-7099.

All other inquiries concerning either the examination or status of the application should be directed to the Technology Center.

The application is being forwarded to the Technology Center Art Unit 3752 for action on the merits commensurate with this decision.

David Bucci
Petitions Examiner
Office of Petitions

UNITED STATES PATENT AND TRADEMARK OFFICE

Commissioner for Patents
United States Patent and Trademark Office
P.O. Box 1450
Alexandria, VA 22313-1450
www.uspto.gov

SILICON VALLEY PATENT GROUP LLP
2350 MISSION COLLEGE BOULEVARD
SUITE 360
SANTA CLARA CA 95054

COPY MAILED

MAR 2 0 2007

OFFICE OF PETITIONS

In re Application of	:	
Richard K. Williams et al	:	
Application No. 11/067,248	:	ON PETITION
Filed: February 25, 2005	:	
Attorney Docket No. AAT011-6C US	:	

This is a decision on the petition, filed March 9, 2007, under 37 CFR 1.313(c)(2) to withdraw the above-identified application from issue after payment of the issue fee.

The petition is **GRANTED**.

The above-identified application is withdrawn from issue for consideration of a submission under 37 CFR 1.114 (request for continued examination). See 37 CFR 1.313(c)(2).

Petitioner is advised that the issue fee paid on February 20, 2007 in the above-identified application cannot be refunded. If, however, the above-identified application is again allowed, petitioner may request that it be applied towards the issue fee required by the new Notice of Allowance.[1]

Telephone inquiries should be directed to the undersigned at (571) 272-3208.

The examiner of Technology Center AU 2822 will consider the request for continued examination under 37 CFR 1.114.

Karen Creasy

Karen Creasy
Petitions Examiner
Office of Petitions

---

[1] The request to apply the issue fee to the new Notice may be satisfied by completing and returning the new Issue Fee Transmittal Form PTOL-85(b), which includes the following language thereon: "Commissioner for Patents is requested to apply the Issue Fee and Publication Fee (if any) or re-apply any previously paid issue fee to the application identified above." Petitioner is advised that, whether a fee is indicated as being due or not, the Issue Fee Transmittal Form **must** be completed and timely submitted to avoid abandonment. Note the language in bold text on the first page of the Notice of Allowance and Fee(s) Due (PTOL-85).

UNITED STATES PATENT AND TRADEMARK OFFICE

UNITED STATES DEPARTMENT OF COMMERCE
United States Patent and Trademark Office
Address: COMMISSIONER FOR PATENTS
P.O. Box 1450
Alexandria, Virginia 22313-1450
www.uspto.gov

WHIRLPOOL PATENTS COMPANY - MD 0750
500 RENAISSANCE DRIVE - SUITE 102
ST. JOSEPH, MI 49085

Mail Date: 04/21/2010

Applicant	: Marcus Zsambeki	: DECISION ON REQUEST FOR
Patent Number	: 7578150	: RECALCULATION of PATENT
Issue Date	: 08/25/2009	: TERM ADJUSTMENT IN VIEW
Appliction No	: 11/067,254	: OF WYETH AND NOTICE OF INTENT TO
Filed	: 02/25/2005	: ISSUE CERTIFICATE OF CORRECTION
		:

The Request for Recalculation is **GRANTED** to the extent indicated.

The patent term adjustment has been determined to be **848** days. The USPTO will *sua sponte* issue a certificate of correction reflecting the amount of PTA days determined by the recalculation.

Prior to the issuance of the certificate of correction, the USPTO will afford patentee an opportunity to be heard and request reconsideration. Accordingly, patentee has **one month or thirty (30) days**, whichever is longer, to file a request for reconsideration of this patent term adjustment calculation. See 35 U.S.C. 154(b)(3)(B)(ii) and 37 CFR 1.322(a)(4). No extensions of time will be granted under 37 CFR 1.136.

Patentee should use document code PET.OP if electronically filing a request for reconsideration of this patent term adjustment calculation. The patentee must also include the information required by 37 CFR 1.705(b)(2) and the fee required by 37 CFR 1.18(e). If patentee does not file a timely request for reconsideration of this patent term adjustment calculation including the information required by 37 CFR 1.705(b)(2) and the fee required by 37 CFR 1.18(e), the USPTO will issue a certificate of correction reflecting the PTA determination noted above.

Patentee should be aware that in order to preserve the right to review in the United States District Court for the District of Columbia of the USPTO patent term adjustment determination, patentee must ensure that he or she also take the steps required under 35 U.S.C. 154(b)(4)(A) in a timely manner. Nothing in the request for recalculation should be construed as providing an alternative time frame for commencing a civil action under 35 U.S.C. 154(b)(4)(A).

Any questions concerning this decision should be directed to the Office of Patent Legal Administration at 571-272-7702.

UNITED STATES PATENT AND TRADEMARK OFFICE

Commissioner for Patents
United States Patent and Trademark Office
P.O. Box 1450
Alexandria, VA 22313-1450
www.uspto.gov

Henry Gibson
General Electric Company
One Plastics Avenue
Pittsfield MA 01201

COPY MAILED

JAN 3 1 2008

OFFICE OF PETITIONS

In re Application of	: DECISION DISMISSING PETITION
Croll et al.	: UNDER 37 CFR 1.137(b)
Application No. 11/067268	:
Filing or 371(c) Date: 02/25/2005	:
Attorney Docket No. 165572-1	:

This is a decision on the petition under 37 CFR 1.137(b), filed November 26, 2007, to revive the above-identified application.

This Petition is hereby **dismissed**.

Any further petition to revive the above-identified application must be submitted within TWO (2) MONTHS from the mail date of this decision. Extensions of time under 37 CFR 1.136(a) are permitted. The reconsideration request should include a cover letter entitled "Request for Reconsideration of Petition under [insert the applicable code section]". This is **not** final agency action within the meaning of 5 U.S.C. § 704.

Background

The above-identified application became abandoned for failure to timely and properly reply to the non-final Office action, mailed November 29, 2006. The Office action set a three (3) month period for reply from the mail date of the Office action. Extensions of time were available under 37 CFR 1.136(a). No reply having been received, the application became abandoned on February 27, 2007. A Notice of Abandonment was mailed August 7, 2007.

Applicant files the present petition and Amendment[1] in response to the Office action.

Applicable law, Rules and MPEP

A grantable petition under 37 CFR 1.137(b) must be accompanied by: (1) the required reply, unless previously filed; (2) the petition fee as set forth in 37 CFR 1.17(m); (3) a statement that the entire delay in filing the required reply from the due date for the reply until the filing of a grantable petition pursuant to 37 CFR 1.137(b) was unintentional; and (4) any terminal disclaimer (and fee as set forth in 37 CFR 1.20(d)) required by 37 CFR 1.137(d). Where there is

[1] Applicant also filed a petition to accept an unintentionally delayed claim for priority under 37 CFR 1.78(a)(3), using the same Amendment. A Decision on the petition under 37 CFR 1.78 is being mailed on even date herewith.

a question as to whether either the abandonment or the delay in filing a petition under 37 CFR 1.137 was unintentional, the Director may require additional information. See MPEP 711.03(c)(II)(C) and (D). The instant petition lacks item(s) (1).

The present petition and amendment

As to item (1), the reference to add the above-noted, prior-filed applications in the first sentence of the specification on page one following the title is not acceptable as drafted since it improperly incorporates by reference the prior-filed application(s). An incorporation by reference statement added after an application's filing date is not effective because no new matter can be added to an application after its filing date (*see* 35 U.S.C. § 132(a)). If an incorporation by reference statement is included in an amendment to the specification to add a benefit claim under 35 U.S.C. § 120 after the filing date of the application, the amendment would not be proper. When a benefit claim under 35 U.S.C. § 120 is submitted after the filing of an application, the reference to the prior application cannot include an incorporation by reference statement of the prior application. *See* Dart Industries v. Banner, 636 F.2d 684, 207 USPQ 273 (C.A.D.C. 1980). *Note* MPEP §§ 201.06(c) and 608.04(b).

It is also noted that the amendment incorrectly identifies the "benefits accruing under 35 U.S.C. § 119." Applicant is advised that 35 U.S.C. § 119 applies to prior-filed foreign (sections (a) – (d)) or provisional (section (e)) applications. 35 U.S.C. § 120 applies to prior-filed copending nonprovisional applications (or international applications designating the United States of America).

Further correspondence with respect to this matter should be addressed as follows:

By mail: Director for Patents
PO Box 1450
Alexandria, VA 22313-1450

By FAX: (571) 273-8300
Attn: Office of Petitions

By hand: Customer Service Window
Randolph Building
401 Dulany Street
Alexandria, VA 22314

Telephone inquiries concerning this petition Decision should be directed to the undersigned at (571) 272-3232.

Derek L. Woods
Attorney
Office of Petitions

UNITED STATES PATENT AND TRADEMARK OFFICE

Commissioner for Patents
United States Patent and Trademark Office
P.O. Box 1450
Alexandria, VA 22313-1450
www.uspto.gov

Henry Gibson
General Electric Company
One Plastics Avenue
Pittsfield MA 01201

COPY MAILED

JAN 3 1 2008

OFFICE OF PETITIONS

In re Application of	:	
Croll et al.	:	
Application No. 11/067268	:	DECISION ON PETITION
Filing or 371(c) Date: 02/25/2005	:	UNDER 37 CFR 1.78(a)(3)
Attorney Docket No. 165572-1	:	

This is a decision on the petition under 37 CFR 1.78(a)(3), filed November 26, 2007, to accept an unintentionally delayed claim under 35 U.S.C. § 120 for the benefit of priority to the prior-filed nonprovisional applications set forth in the amendment filed with the petition.

The petition is **DISMISSED**.

A petition for acceptance of a claim for late priority under 37 CFR 1.78(a)(3) is only applicable to those applications filed on or after November 29, 2000. Further, the petition is appropriate only after the expiration of the period specified in 37 CFR 1.78(a)(2)(ii). In addition, the petition under 37 CFR 1.78(a)(3) must be accompanied by:

(1) the reference required by 35 U.S.C. § 120 and 37 CFR 1.78(a)(2)(i) of the prior-filed application, unless previously submitted;
(2) the surcharge set forth in § 1.17(t); and
(3) a statement that the entire delay between the date the claim was due under 37 CFR 1.78(a)(2)(ii) and the date the claim was filed was unintentional. The Director may require additional information where there is a question whether the delay was unintentional.

The petition does not satisfy items (1) and (3) above.

As to item (1), the reference to add the above-noted, prior-filed applications in the first sentence of the specification on page one following the title is not acceptable as drafted since it improperly incorporates by reference the prior-filed application(s). An incorporation by reference statement added after an application's filing date is not effective because no new matter can be added to an application after its filing date (*see* 35 U.S.C. § 132(a)). If an

incorporation by reference statement is included in an amendment to the specification to add a benefit claim under 35 U.S.C. § 120 after the filing date of the application, the amendment would not be proper. When a benefit claim under 35 U.S.C. § 120 is submitted after the filing of an application, the reference to the prior application cannot include an incorporation by reference statement of the prior application. *See* Dart Industries v. Banner, 636 F.2d 684, 207 USPQ 273 (C.A.D.C. 1980). *Note* MPEP §§ 201.06(c) and 608.04(b).

It is also noted that the amendment incorrectly identifies the "benefits accruing under 35 U.S.C. § 119." Applicant is advised that 35 U.S.C. § 119 applies to prior-filed foreign (sections (a) – (d)) or provisional (section (e)) applications. 35 U.S.C. § 120 applies to prior-filed copending nonprovisional applications (or international applications designating the United States of America).

As to item (3), a statement that the entire delay between the date the claim was due under 37 CFR 1.78, paragraph (a)(2)(ii), and the date the claim was filed was unintentional, a review of the petition reveals that the petition, including the statement of unintentional delay, is executed by Pamela Curbelo of Cantor Colburn LLP. A review of the application as-filed on February 25, 2005, reveals that the Applicant's appointed attorneys at General Electric Company to represent them in this application. Pamela Curbelo was not listed as one of the attorneys. Moreover, Office records do not indicate that a power of attorney or change of correspondence address has been filed in this case, although the address given on the petition differs from the address of record.

In this instance, the claim was due within the later of four months from the actual filing date of the later-filed application, or sixteen months from the filing date of the prior-filed application. See, 37 CFR 1.78(a)(2)(ii). Because Petitioner herein was not an attorney of record when the application was filed, and because there is no indication in Office records prior to the filing of the present petition that petitioner is authorized to act in this case, there is a question as to whether petitioner herein is in a position to know whether the entire delay between the date the claim was due under 37 CFR 1.78, paragraph (a)(2)(ii), and the date the claim was filed, was unintentional.

Before the petition under 37 CFR § 1.78(a)(3) can be granted, a renewed petition; an Application Data Sheet or an amendment (complying with the provisions of 37 CFR 1.121 and 37 CFR 1.76(b)(5)), to correct the above matters, and a statement from a proper party, that the entire delay between the date the claim was due under paragraph (a)(2)(ii) of this section and the date the claim was filed was unintentional, are required.

Further correspondence with respect to this matter should be addressed as follows:

By mail: Mail Stop PETITIONS
Director for Patents
Post Office Box 1450
Alexandria, VA 22313-1450

By hand: Customer Service Window
Mail Stop Petitions
Randolph Building
401 Dulany Street
Alexandria, VA 22314

By fax: (571) 273-8300
ATTN: Office of Petitions

Any questions concerning this matter may be directed to Attorney Derek Woods at (571) 272-3232.

Anthony Knight
Supervisor
Office of Petitions

UNITED STATES PATENT AND TRADEMARK OFFICE

Commissioner for Patents
United States Patent and Trademark Office
P.O. Box 1450
Alexandria, VA 22313-1450
www.uspto.gov

COPY MAILED

APR 0 4 2008

OFFICE OF PETITIONS

ADVANTEDGE LAW GROUP , LLC
3301 N. UNIVERSITY AVE .
SUITE 200
PROVO UT 84604

In re Application of

JAAX, Kristen N. et al.
Application No. 11/067,286
Filed: February 25, 2005
Attorney Docket No. **3013-0020 (05-00704-01)**

DECISION ON PETITION
TO WITHDRAW
FROM RECORD

This is a decision on the Request to Withdraw as attorney or agent of record under 37 C.F.R. § 1.36(b), filed February 14, 2008.

The request is **NOT APPROVED**.

A grantable request to withdraw as attorney/agent of record must be signed by every attorney/agent seeking to withdraw or contain a clear indication that one attorney is signing on behalf of another/others. A request to withdraw will not be approved unless at least 30 (thirty) days would remain between the date of approval and the later of the expiration date of a time to file a response or the expiration date of the maximum time period which can be extended under 37 C.F.R. § 1.136(a).

The Office cannot approve the request at this time since the reasons provided do not meet any of the conditions under the mandatory or permissive categories enumerated in 37 CFR 10.40. Section 10.40 of Title 37 of the Code of Federal Regulation states, "[a] practitioner shall not withdraw from employment in a proceeding before the Office without permission from the Office[.]" More specifically, 37 CFR 10.40 states, "[i]f paragraph (b) of this section is not applicable, a practitioner may not request permission to withdraw in matter pending before the Office unless such request or such withdrawal is" for one the permissive reasons listed in 37 CFR 10.40(c). The reasons set forth in the request, ownership transfer does not meet any of the conditions set forth in 37 CFR 10.40.

All future communications from the Office will continue to be directed to the above-listed address until otherwise notified by applicant.

Telephone inquiries concerning this decision should be directed to Tredelle Jackson at 571-272- 2783.

Tredelle D. Jackson
Petitions Examiner
Office of Petitions

UNITED STATES PATENT AND TRADEMARK OFFICE

UNITED STATES DEPARTMENT OF COMMERCE
United States Patent and Trademark Office
Address: COMMISSIONER FOR PATENTS
P.O. Box 1450
Alexandria, Virginia 22313-1450
www.uspto.gov

VISTA IP LAW GROUP LLP/BSC - NEUROMODULATION
2040 MAIN STREET, Suite 710
IRVINE, CA 92614

Mail Date: 04/21/2010

Applicant	: Kristen N. Jaax	: DECISION ON REQUEST FOR
Patent Number	: 7657316	: RECALCULATION of PATENT
Issue Date	: 02/02/2010	: TERM ADJUSTMENT IN VIEW
Appliction No	: 11/067,286	: OF WYETH AND NOTICE OF INTENT TO
Filed	: 02/25/2005	: ISSUE CERTIFICATE OF CORRECTION
		:

The Request for Recalculation is **GRANTED** to the extent indicated.

The patent term adjustment has been determined to be **1237** days. The USPTO will *sua sponte* issue a certificate of correction reflecting the amount of PTA days determined by the recalculation.

Prior to the issuance of the certificate of correction, the USPTO will afford patentee an opportunity to be heard and request reconsideration. Accordingly, patentee has **one month or thirty (30) days**, whichever is longer, to file a request for reconsideration of this patent term adjustment calculation. See 35 U.S.C. 154(b)(3)(B)(ii) and 37 CFR 1.322(a)(4). No extensions of time will be granted under 37 CFR 1.136.

Patentee should use document code PET.OP if electronically filing a request for reconsideration of this patent term adjustment calculation. The patentee must also include the information required by 37 CFR 1.705(b)(2) and the fee required by 37 CFR 1.18(e). If patentee does not file a timely request for reconsideration of this patent term adjustment calculation including the information required by 37 CFR 1.705(b)(2) and the fee required by 37 CFR 1.18(e), the USPTO will issue a certificate of correction reflecting the PTA determination noted above.

Patentee should be aware that in order to preserve the right to review in the United States District Court for the District of Columbia of the USPTO patent term adjustment determination, patentee must ensure that he or she also take the steps required under 35 U.S.C. 154(b)(4)(A) in a timely manner. Nothing in the request for recalculation should be construed as providing an alternative time frame for commencing a civil action under 35 U.S.C. 154(b)(4)(A).

Any questions concerning this decision should be directed to the Office of Patent Legal Administration at 571-272-7702.

UNITED STATES PATENT AND TRADEMARK OFFICE

Commissioner for Patents
United States Patent and Trademark Office
P.O. Box 1450
Alexandria, VA 22313-1450
www.uspto.gov

COPY MAILED

OCT 1 4 2005

OFFICE OF PETITIONS

MERCHANT & GOULD PC
P.O. BOX 2903
MINNEAPOLIS MN 55402-0903

In re Application of
William G. Mizuno et al.
Application No. 11/067,301
Filed: February 25, 2005
Attorney Docket No. 163.1828US1

: DECISION ACCORDING STATUS
: UNDER 37 CFR 1.47(a)

This is in response to the petition filed September 20, 2005 under 37 CFR 1.47(a).

The petition under 37 CFR 1.47(a) is **GRANTED**.

The above-identified application was filed on February 25, 2005, without an oath or declaration. Accordingly, on March 21, 2005, a "Notice To File Missing Parts of Application" was mailed, requiring *inter alia* a properly executed oath or declaration.

In response, the instant petition under 37 CFR 1.47(a), an oath or declaration naming William G. Mizuno (deceased) Michael E. Besse and Brenda L. Tjelta as joint inventors but only executed by inventors Besse and Tjelta, fees and a request for a four month extension of time were filed. The petition argues that joint inventor Mizuno is deceased and that the application papers were forwarded to Ellen Voeller, Mr. Mizuno's daughter but that Ms. Voeller has by her actions, refused to cooperate with the filing of the instant application.

A grantable petition under 37 CFR 1.47(a) requires: (1) proof that the non-signing inventor cannot be reached or refuses to sign the oath or declaration after having been presented with the application papers (specification, claims and drawings); (2) an acceptable oath or declaration in compliance with 35 U.S.C. §§ 115 and 116; (3) the petition fee; and (4) a statement of the last known address of the non-signing inventor.

The petition bears proof that the application papers were forwarded to and received by Ms. Voeller and that to date, she has not returned an executed copy of the oath or declaration.

The above-identified application and papers have been reviewed and found in compliance with 37 CFR 1.47(a). In view thereof, this application is hereby accorded Rule 1.47(a) status.

Thus, as provided in Rule 1.47c, this Office will forward notice of this application's filing to the non-signing inventor at the address given in the petition. Notice of the filing of this application will also be published in the Official Gazette.

Please be advised that effective November 22, 2004, the petition fee has been increased to $200.00. Therein, deposit account no. 13-2725 has been charged in the amount of $200.00 for the petition fee, pursuant to 37 CFR 1.17(g). See the Notice published in the Federal Register on September 21, 2004 and in the Official Gazette of the United States Patent and Trademark Office on October 12, 2004.

This matter is being referred to Technology Center 1724 for examination in due course.

Telephone inquiries concerning this matter may be directed to the undersigned Petitions Attorney at (571) 272-3212.

Patricia Faison-Ball

Patricia Faison-Ball
Senior Petitions Attorney
Office of Petitions

UNITED STATES PATENT AND TRADEMARK OFFICE

Commissioner for Patents
United States Patent and Trademark Office
P.O. Box 1450
Alexandria, VA 22313-1450
www.uspto.gov

ELLEN VOELLER
5325 CULVER ROAD
GOLDEN VALLEY, MN 55422

COPY MAILED

OCT 1 4 2005

OFFICE OF PETITIONS

In re Application of
William G. Mizuno et al.
Application No. 11/067,301
Filed: February 25, 2005
For: METHOD FOR TREATING FEEDWATER, FEEDWATER TREATMENT COMPOSITION, AND APPARATUS FOR TREATING FEEDWATER

Dear Ms. Voeller:

You have been identified as the legal representative of William G. Mizuno (deceased), who has been named as a joint inventor in the above identified United States patent application, filed under the provisions of 35 U.S.C. 116 (United States Code), and 37 CFR 1.47(a), Rules of Practice in Patent Cases. Should a patent be granted on the application Mr. Mizuno will be designated therein as a joint inventor.

As the legal representative of a named inventor, you are entitled to inspect any paper in the file wrapper of the application, order copies of all or any part thereof (at a prepaid cost per 37 CFR 1.19) or make your position of record in the application. Alternatively, you may arrange to do any of the preceding through a registered patent attorney or agent presenting written authorization from you. If you care to join the application, counsel of record (see below) would presumably assist you. Joining in the application would entail the filing of an appropriate oath or declaration by you pursuant to 37 CFR 1.63.

Telephone inquiries regarding this communication should be directed to the undersigned Petitions Attorney at (571) 272-3212. Requests for information regarding your application should be directed to the File Information Unit at 703/308-2733. Information regarding how to pay for and order a copy of the application, or a specific paper in the application, should be directed to Certification Division at 703/308-9726 or 1-800-972-6382 (outside the Washington D.C. area).

Patricia Faison-Ball

Patricia Faison-Ball
Senior Petitions Attorney
Office of Petitions

cc:
MERCHANT & GOULD PC
P.O. BOX 2903
MINNEAPOLIS MN 55402-0903

UNITED STATES PATENT AND TRADEMARK OFFICE

Commissioner for Patents
United States Patent and Trademark Office
P.O. Box 1450
Alexandria, VA 22313-1450
www.uspto.gov

MERCHANT & GOULD PC
P.O. BOX 2903
MINNEAPOLIS MN 55402-0903

COPY MAILED

MAR 2 9 2007

OFFICE OF PETITIONS

In re Application of	:	
William G. Mizuno, et al.	:	
Application No. 11/067,301	:	DECISION ON PETITION
Filed: February 25, 2005	:	TO WITHDRAW
Attorney Docket No. 163.1828US1	:	FROM RECORD
	:	

This is a decision on the Request to Withdraw as attorney or agent of record under 37 C.F.R. § 1.36(b) filed January 22, 2007.

The request is **APPROVED**.

A grantable request to withdraw as attorney/agent of record must be signed by every attorney/agent seeking to withdraw or contain a clear indication that one attorney is signing on behalf of another/others. A request to withdraw will not be approved unless at least 30 (thirty) days would remain between the date of approval and the later of the expiration date of a time to file a response or the expiration date of the maximum time period which can be extended under 37 C.F.R. § 1.136(a).

The request was signed by Sarah M. Monfeldt on behalf of herself.

All other attorneys remain of record.

The correspondence address of record remains unchanged.

There are no pending Office actions at the present time.

Telephone inquiries concerning this decision should be directed to undersigned at 571-272-1642.

April M. Wise
Petitions Examiner
Office of Petitions

UNITED STATES PATENT AND TRADEMARK OFFICE

Commissioner for Patents
United States Patent and Trademark Office
P.O. Box 1450
Alexandria, VA 22313-1450
www.uspto.gov

MAILED

NOV 24 2009

OFFICE OF PETITIONS

DUGAN & DUGAN, PC
245 SAW MILL RIVER ROAD
SUITE 309
HAWTHORNE, NY 10532

In re Application of :
Michael Teferra et al :
Application No. 11/067,302 : ON PETITION
Filed: February 25, 2005 :
Attorney Docket No. 008812 USA P 01
SYNX/SYNX

This is a decision on the petition, filed November 19, 2009 under 37 CFR 1.313(c)(2) to withdraw the above-identified application from issue after payment of the issue fee.

The petition is **GRANTED**.

The above-identified application is withdrawn from issue for consideration of a submission under 37 CFR 1.114 (request for continued examination). See 37 CFR 1.313(c)(2).

Petitioner is advised that the issue fee paid on September 2, 2009 in the above-identified application cannot be refunded. If, however, the above-identified application is again allowed, petitioner may request that it be applied towards the issue fee required by the new Notice of Allowance.[1]

Telephone inquiries should be directed to Irvin Dingle at (571) 272-3210.

This matter is being referred to Technology Center AU 2121 for processing of the request for continued examination under 37 CFR 1.114 and for consideration of the concurrently filed Information Disclosure Statement.

/Irvin Dingle/
Irvin Dingle
Petitions Examiner
Office of Petitions

---

[1] The request to apply the issue fee to the new Notice may be satisfied by completing and returning the new Issue Fee Transmittal Form PTOL-85(b), which includes the following language thereon: Commissioner for Patents is requested to apply the Issue Fee and Publication Fee (if any) or re-apply any previously paid issue fee to the application identified above. Petitioner is advised that, whether a fee is indicated as being due or not, the Issue Fee Transmittal Form **must** be completed and timely submitted to avoid abandonment. Note the language in bold text on the first page of the Notice of Allowance and Fee(s) Due (PTOL-85).

UNITED STATES PATENT AND TRADEMARK OFFICE

Commissioner for Patents
United States Patent and Trademark Office
P.O. Box 1450
Alexandria, VA 22313-1450
www.uspto.gov

COPY MAILED

SEP 2 6 2005

OFFICE OF PETITIONS

TOWNSEND AND TOWNSEND AND CREW, LLP
TWO EMBARCADERO CENTER
EIGHTH FLOOR
SAN FRANCISCO CA 94111-3834

In re Application of Grace et al. Application No. 11/067,306 Filed: February 25, 2005 Attorney Docket No. 040048-000410US	: : : : :	Decision Noting Joinder of Inventor and Decision Dismissing Any Request for Status Under 37 CFR 1.47 as Moot

This is a decision in response to the petition under 37 CFR 1.47(a), filed June 23, 2005, and the request to withdraw the petition filed August 29, 2005.

The papers filed August 29, 2005, include a Declaration signed by the previously non-signing inventor in compliance with 37 CFR 1.63.

In view of the joinder of the inventor, further consideration under Rule 1.47(a) is unnecessary. Therefore, the petition is **dismissed as moot**.

The request to withdraw the petition was filed prior to consideration being given to the petition under 37 CFR 1.47(a). Exercising its discretion, the Office will credit the $400 petition fee back to petitioner's deposit account.

The Office of Initial Patent Examination will be informed of the instant decision so that it may continue taking steps to prepare the application for examination.

Telephone inquiries regarding this communication should be directed to Petitions Attorney Steven Brantley at (571) 272-3203.

Charles Steven Brantley
Senior Petitions Attorney
Office of Petitions

UNITED STATES PATENT AND TRADEMARK OFFICE

Commissioner for Patents
United States Patent and Trademark Office
P.O. Box 1450
Alexandria, VA 22313-1450
www.uspto.gov

HOWARD J. GREENWALD P.C.
349 W. COMMERCIAL STREET SUITE 2490
EAST ROCHESTER NY 14445-2408

COPY MAILED
MAY 3 1 2006
OFFICE OF PETITIONS

In re Application of	:	
Wang et al.	:	DECISION ON PETITION
Application No. 11/067,325	:	TO WITHDRAW
Filed: February 25, 2005	:	FROM RECORD
Attorney Docket No. XW-798	:	

This is a decision on the Request to Withdraw as attorney or agent of record under 37 C.F.R. § 1.36(b) filed October 3, 2005, which is being treated as a request to withdraw from employment in a proceeding before the Office under 37 C.F.R. § 10.40.

The request is **APPROVED**.

A review of the file record indicates that Howard J. Greenwald and the attorneys associated with Customer Number 37282: (1) does not have power of attorney in this patent application; but (2) has been employed or otherwise engaged in the proceedings in this patent application. The attorneys associated with Customer Number 37282 may not act in a representative capacity under 37 C.F.R. § 1.34 unless appointed in an acceptable power of attorney under 37 C.F.R. § 1.32(b).

All future communications from the Office will continue to be directed to the first named inventor at the first below-listed address until otherwise properly notified by the applicants.

Telephone inquires concerning this decision should be directed to Petitions Examiner Liana Chase at 571-272-3206.

David Bucci
Petitions Examiner
Office of Petitions

cc:

XINGWU WANG
1886 EAST DRIVE
WELLSVILLE, NY 14895

NANOSET LLC
349 W COMMERCIAL STREET
SUITE 2490
EAST ROCHESTER, NY 14445

UNITED STATES PATENT AND TRADEMARK OFFICE

Commissioner for Patents
United States Patent and Trademark Office
P.O. Box 1450
Alexandria, VA 22313-1450
www.uspto.gov

WINSTEAD PC
P.O. BOX 50784
DALLAS TX 75201

COPY MAILED

AUG 24 2009

OFFICE OF PETITIONS

In re Application of
NAJAFI, Ramin et al.
Application No. 11/067,334
Filed: February 25, 2005
Attorney Docket No. **42392-P001US**

DECISION ON PETITION
TO WITHDRAW
FROM RECORD

This is a decision on the Request to Withdraw as attorney or agent of record under 37 C.F.R. § 1.36(b), filed July 17, 2009.

The request is **NOT APPROVED** because it is moot.

A review of the file record indicates that a change of address was submitted on June 29, 2009. Accordingly, the request to withdraw under 37 C.F.R. § 1.36(b) is moot.

All future communications from the Office will continue to be directed to the below-listed address until otherwise notified by applicant.

Telephone inquires concerning this decision should be directed to Tredelle Jackson at 571-272-2783.

Tredelle D. Jackson
Paralegal Specialist
Office of Petitions

cc: **SHAWN MCCARTHY**
PO BOX 470900
FORT WORTH TX 76147

UNITED STATES PATENT AND TRADEMARK OFFICE

Commissioner for Patents
United States Patent and Trademark Office
P.O. Box 1450
Alexandria, VA 22313-1450
www.uspto.gov

NOV 15 2007

CHALKER FLORES, LLP
2711 LBJ FRWY
SUITE 1036
DALLAS TX 75234

In re Application of	:
Jacques Banchereau et al	:
Serial No.: 11/067,335	: PETITION TO MAKE SPECIAL
Filed: February 25, 2005	:
Attorney Docket No.: BHCS:1010	:

This is a decision on the petition filed on October 29, 2007, to make the above-identified application special for accelerated examination procedure under 37 C.F.R. § 1.102(d).

The petition to make the application special is **DENIED**.

REGULATION AND PRACTICE

To be eligible for accelerated examination under 37 C.F.R. § 1.102(d) and pursuant to the "Change to Practice for Petitions in Patent Applications to Make Special and for Accelerated Examination" published in the Federal Register on June 26, 2006 (71 Fed. Reg. 36323), the following conditions must be satisfied:

1. The application must be a **newly** filed non-reissue utility or design application filed under 37 CFR 1.111(a);
2. The application, the petition and the required fees must be filed electronically using the USPTO's electronic filing system (EFS), or EFS-web; if not filed electronically, a statement asserting that EFS and EFS-web were not available during the normal business hours;
3. The application, at the time of filing, must be complete under 37 CFR 1.51 and in condition for examination;
4. The application must contain three or fewer independent claims and twenty or fewer total claims and the claims must be directed to a single invention.

The application as filed is not eligible for the accelerated examination under 37 C.F.R. § 1.102(d) because it is not a new application filed electronically having a petition to make special included with the application papers. The petition was filed separately more than 2 years after the application was filed and lacks the required Pre-examination Search and Support Documents.

The amended application will therefore be taken up by the examiner for reconsideration in its regular turn.

Any inquiry regarding this decision should be directed to William R. Dixon, Jr., Special Program Examiner, at (571) 272-0519.

William R. Dixon, Jr.
Special Program Examiner
Technology Center 5000

UNITED STATES PATENT AND TRADEMARK OFFICE

COMMISSIONER FOR PATENTS
UNITED STATES PATENT AND TRADEMARK OFFICE
P.O. BOX 1450
ALEXANDRIA, VA 22313-1450
www.uspto.gov

Paper No.

FISH & RICHARDSON PC
P.O. BOX 1022
MINNEAPOLIS, MN 55440-1022

COPY MAILED

SEP 09 2005

OFFICE OF PETITIONS

In re Application of	:	
Bader et al.	:	
Application No. 11/067,349	:	DECISION ON PETITION
Filed: February 25, 2005	:	
Atty Docket No. 12406-035US3	:	
/P2000,0068 U	:	

This is a decision on the "PETITION IN RESPONSE TO NOTICE OF INCOMPLETE APPLICATION," filed May 20, 2005, requesting that the above-identified application be accorded a filing date of February 25, 2005. This decision is made in light of the supplement to petition filed August 22, 2005.

Application papers in the above-identified application were deposited on February 25, 2005. However, on May 13, 2005, the Office mailed a "Notice of Incomplete Nonprovisional Application," notifying applicants that the application papers had not been accorded a filing date because the application was deposited without drawings.

Petitioner responded with the instant petition (and authorization to charge the petition fee). Petitioner asserts that as indicated on the attached postcard, the drawings were submitted on February 25, 2005. Applicants submit what is described as a copy of the drawings as originally filed in the parent application and requests that the drawings be incorporated into the present application. In response to a telephone inquiry, on August 22, 2005, applicants supplied a copy of the drawings as submitted with the original application filed on February 25, 2005.

A postcard receipt which itemizes and properly identifies the items which are being filed serves as prima facie evidence of receipt in the Office of all items listed thereon on the date stamped thereon by the Office. See MPEP 503. A review of the postcard receipt reveals that: 1) it bears a USPTO date-stamp acknowledging receipt on February 25, 2005 of the papers assigned application No. 11/067349, 2) it identifies the items being filed, including "Drawings (formal, 9 sheets)" and 3) it lacks any annotation of nonreceipt of any item denoted on the postcard. Thus, petitioners have shown that the items denoted, including the nine sheets of drawings, were filed on February 25, 2005. Further, petitioner has supplied another copy of the drawings as originally filed.

Accordingly, the petition is **GRANTED**.

Given the basis for granting the petition, the petition fee is subject to refund. Accordingly, although authorized, no petition fee has been charged to petitioner's Deposit Account.

The Office of Initial Patent Examination (OIPE) has been advised of this decision. The application has thereby been forwarded to OIPE for:

> Correction of the filing date to February 25, 2005, using the application papers received in the Office and presently accorded that date; and the nine sheets of drawings re-supplied on supplement to petition filed August 22, 2005.

Applicants will receive appropriate notifications regarding the fees owed, if any, and other information in due course from OIPE.

Telephone inquiries related to this decision should be directed to the undersigned at 571-272-3219.

Nancy Johnson
Senior Petitions Attorney
Office of Petitions

UNITED STATES PATENT AND TRADEMARK OFFICE

Commissioner for Patents
United States Patent and Trademark Office
P.O. Box 1450
Alexandria, VA 22313-1450
www.uspto.gov

BAKER BOTTS L.L.P.
2001 ROSS AVENUE
SUITE 600
DALLAS, TX 75201-2980

COPY MAILED

AUG 0 8 2005

OFFICE OF PETITIONS

In re Application of :
Fallah, et al. :
Application No. 11/067,357 : ON PETITION
Filed: February 25, 2005 :
Attorney Docket No.: 073338.0220(04-52446 FLA :

This is a decision on the petition under 37 CFR 1.182, filed July 8, 2005, requesting that the above-identified application retain the presently accorded filing date, notwithstanding the alleged omission of page 20 of the specification.

The petition is **dismissed**.

On February 25, 2005, the above-identified application was filed. However, on May 12, 2005, the Office of Initial Patent Examination mailed a "Notice of Omitted Items of Nonprovisional Application", stating that application had been accorded a filing date of February 25, 2005, and advising applicant that page 20 of the specification appeared to have been omitted.

In response, on July 8, 2005, applicant filed the present petition. Applicant maintains that the pages of the specification were misnumbered and that page 20 of the specification was not omitted. Applicant maintains that the application was complete on filing and entitled to the currently accorded filing date of February 25, 2005.

The Notice permits applicant to either: (1) promptly establish prior receipt in the Office of the items at issue (generally by way of a date-stamped postcard receipt (MPEP 503)), or (2) promptly submit the omitted items and accept the date of such submission as the application filing date. An applicant asserting that the missing items were in fact deposited in the Office with the application papers must file a petition (and the appropriate petition fee) with evidence of such deposit. An applicant desiring to submit the omitted items in a nonprovisional application and accept the date of such submission as the application filing date must file any omitted items with an oath or declaration in compliance with 37 CFR 1.63 and 1.64 referring to such omitted items and a petition under 37 CFR 1.182 (with the petition fee under 37 CFR 1.17(h) requesting the later filing date within two months of the date of the Notice (37 CFR 1.181(f)). The Notice further indicates that:

> In the event that applicant elects not to take action pursuant to options (1) of (2) above (thereby constructively electing option (3)), amendment of the specification to renumber the pages consecutively and cancel all references to any omitted drawings(s), relabel the the drawings figures to be numbered consecutively (if necessary), and correct the references in the specification to the drawing figures to correspond with any relabeled drawing figures is required.

The Notice of Omitted Items of Nonprovisional Application was not sent error because, indeed, page 20 of the specification appeared to have been omitted. The notice will not, therefore, be vacated. Based on the aforementioned, a petition is not required to retain the currently accorded filing date and renumber the pages of the specification. The petition is dismissed, accordingly.

The application is being returned to the Office of Initial Patent Examination for further processing with a filing date of June 8, 2005, using only the application papers present on filing.

The petition fee will not be refunded as this petition was necessitated by the applicant's filing error, rather than an error on the part of the Office.

prior to the first action of the merits, petitioner will need to file a preliminary amendment renumbering the pages of the specification.

The application is being directed to the Office of Initial Patent Examination for further processing with a filing date of February 25, 2005, using the papers filed on that date.

Telephone inquiries concerning this decision may be directed to the undersigned at (571) 272-3222.

Kenya A. McLaughlin
Petitions Attorney
Office of Petitions

UNITED STATES PATENT AND TRADEMARK OFFICE

Commissioner for Patents
United States Patent and Trademark Office
P.O. Box 1450
Alexandria, VA 22313-1450
www.uspto.gov

McHALE & SLAVIN PA
2855 PGA BOULEVARD
PALM BEACH GARDENS, FL 33410

COPY MAILED

AUG 28 2007

OFFICE OF PETITIONS

In re Application of :
Banning Gray Lary et al :
Application No. 11/067,363 : DECISION ON PETITION
Filed: February 25, 2005 :
Attorney Docket No. 1859.008 :

This is a decision on the petition under 37 CFR 1.137(b), filed March 27, 2007, to revive the above-identified application.

The petition is **GRANTED.**

The application became abandoned for failure to submit formal drawings on or before August 24, 2006 in reply to the Notice of Allowability, mailed May 24, 2006, which set a period for reply of three (3) months. Accordingly, this application became abandoned on August 25, 2006. A Notice of Abandonment was mailed on September 28, 2006.

The petition satisfies the requirements of 37 CFR 1.137(b) in that petitioner has supplied (1) the required reply in the form of replacement drawings; (2) the petition fee of $750; and (3) a showing to the satisfaction of the Director that the entire delay was unintentional. Accordingly, the failure to timely reply to the Notice of May 24, 2006is accepted as being unintentionally delayed.

This application is being referred to Publishing Division for further processing in accordance with this decision on petition.

Telephone inquiries concerning this decision should be directed to the undersigned at (571) 272-3218.

Frances Hicks
Petitions Examiner
Office of Petitions

UNITED STATES PATENT AND TRADEMARK OFFICE

Commissioner for Patents
United States Patent and Trademark Office
P.O. Box 1450
Alexandria, VA 22313-1450
www.uspto.gov

MORRISON & FOERSTER LLP
12531 HIGH BLUFF DRIVE
SUITE 100
SAN DIEGO CA 92130-2040

MAILED
MAR 25 2010
OFFICE OF PETITIONS

In re Application of
Robert W. Brocia
Application No. 11/067,367
Filed: February 26, 2005
Attorney Docket No.: **527832000500**

ON PETITION

This is a decision on the petition filed January 11, 2010, under 37 CFR 1.137(b)[1], to revive the above-identified application.

The petition is **GRANTED**.

A Restriction Requirement mailed September 20, 2007 set the longer of one month or thirty days as the period for reply. No response to the Restriction Requirement having been timely filed, the application became abandoned October 23, 20007. Accordingly, a Notice of Abandonment was mailed April 18, 2008.

The petition fee in the amount of $810.00 has been applied to the finance records for the instant patent application.

Additionally, the record reveals that after the abandonment and with the instant petition to revive, a five month extension of time was filed, however, pursuant to 37 CFR 1.136, an extension of time must be filed prior to the expiration of the maximum period

---

[1]Effective December 1, 1997, the provisions of 37 CFR 1.137(b) now provide that where the delay in reply was unintentional, a petition may be filed to revive an abandoned application or a lapsed patent pursuant to 37 CFR 1.137(b). A grantable petition filed under the provisions of 37 CFR 1.137(b) must be accompanied by:

(1) the required reply, unless previously filed. In a nonprovisional application abandoned for failure to prosecute, the required reply may be met by the filing of a continuing application. In an application or patent, abandoned or lapsed for failure to pay the issue fee or any portion thereof, the required reply must be the payment of the issue fee or any outstanding balance thereof.

(2) the petition fee as set forth in 37 CFR 1.17(m);

(3) a statement that the entire delay in filing the required reply from the due date for the reply until the filing of a grantable petition pursuant to 37 CFR 1.137(b) was unintentional. The Commissioner may required additional information where there is a question whether the delay was unintentional; and

(4) any terminal disclaimer (and fee as set forth in 37 CFR 1.20(d)) required pursuant to 37 CFR 1.137(c)).

obtainable for reply to avoid abandonment. Accordingly, since the $1175.00 extension of time fee submitted with the petition on January 11, 2010 was subsequent to the maximum period obtainable for reply, this fee is unnecessary and will be credited back to deposit account no. 03-1952.

The response to the Restriction Requirement filed January 11, 2010 will be referred to Technology Center 1657 for further processing.

Telephone inquiries concerning this matter may be directed to the undersigned Petitions Attorney at (571) 272-3212.

Patricia Faison-Ball

Patricia Faison-Ball
Senior Petitions Attorney
Office of Petitions

SPE RESPONSE FOR CERTIFICATE OF CORRECTION

Paper No.: _____

DATE : February 06, 2007

TO SPE OF : ART UNIT 2884 11/067373

SUBJECT : Request for Certificate of Correction on Patent No.: 7126136 B2

A response is requested with respect to the accompanying request for a certificate of correction.

Please complete this form and return with file, within **7** days to:
Palm location **7580, Certificates of Correction Branch – South Tower – 9A22**
If response is for an IFW, **return to employee (named below) via PUBSCofC Team in MADRAS.**
With respect to the change(s) requested, correcting Office and/or Applicant's errors, should the patent read as shown in the certificate of correction (COCIN)? No new matter should be introduced, nor should the scope or meaning of the claims be changed.

Thank You For Your Assistance

Elisha Evans
Certificates of Correction Branch
***Tel. No. 703-**308-9390 EXT 110*

The request for issuing the above-identified correction(s) is hereby:
Note your decision on the appropriate box.

- ☒ **Approved** — **All** changes apply.
- ☐ **Approved in Part** — Specify below which changes **do not** apply.
- ☐ **Denied** — State the reasons for denial below.

Comments:

The examiner notes that there is no Application Data Sheet to change the city of residence.

SPE

2884
Art Unit

UNITED STATES PATENT AND TRADEMARK OFFICE

COMMISSIONER FOR PATENTS
UNITED STATES PATENT AND TRADEMARK OFFICE
P.O. BOX 1450
ALEXANDRIA, VA 22313-1450
www.uspto.gov

AMGEN INC.
MAIL STOP 28-2-C
ONE AMGEN CENTER DRIVE
THOUSAND OAKS CA 91320-1799

MAILED

NOV 19 2009

OFFICE OF PETITIONS

In re Application of	:	
Akerman, et al.	:	
Application No. 11/067,377	:	LETTER REGARDING
Filed: February 25, 2005	:	PATENT TERM ADJUSTMENT
Atty Docket No. A-988 (US)	:	

This letter is in response to the "NOTICE REGARDING CALCULATION OF PTA," filed August 17, 2009. Pursuant to their duty of good faith and candor to the Office, applicants note that six hundred ten (610) days of Patent Term Adjustment indicated on the Notice of Allowance mailed May 20, 2009 disagrees with their own calculation.

The request for correction of the initial determination of patent term adjustment (PTA) is **GRANTED**.

The Office has updated the PALM screen to reflect that the correct Patent Term Adjustment determination at the time of the mailing of the Notice of Allowance is five hundred and four (504) days. A copy of the updated PALM screen, showing the corrected determination, is enclosed.

On May 20, 2009, the Office mailed the Determination of Patent Term Adjustment under 35 U.S.C. 154(b) in the above-identified application. The Notice stated that the patent term adjustment to date is 610 days. Applicants directed the attention of the Office to the following: (1)the date of response to the Notice to File Missing Parts of March 23, 2005; (2) the various Information Disclosure Statements that have been filed in this application; and (3) a Terminal Disclaimer has been filed with respect to this application.

A review of the record reveals that the initial determination of patent term adjustment of 610 days is incorrect. There are two additional reductions that should have been entered.

Pursuant to 37 CFR 1.704(b), a period of reduction of 61 days should have been entered in connection with the reply to the March 23, 2005 Notice to File Missing Parts of Nonprovisional Application. 37 CFR 1.704(b) provides that:

> With respect to the grounds for adjustment set forth in §§ 1.702(a) through (e), and in particular the ground of adjustment set forth in § 1.702(b), an applicant shall be deemed to have failed to engage in reasonable efforts to conclude processing or examination of an application for the cumulative total of any periods of time in excess of three months that are taken to reply to any notice or action by the Office making any rejection, objection, argument, or other request, measuring such three-month period from the date the notice or action was mailed or given to the applicant, in which case the period of adjustment set forth in § 1.703 shall be reduced by the number of days, if any, beginning on the day after the date that is three months after the date of mailing or transmission of the Office communication notifying the applicant of the rejection, objection, argument, or other request and ending on the date the reply was filed. The period, or shortened statutory period, for reply that is set in the Office action or notice has no effect on the three-month period set forth in this paragraph.

In this instance, applicants did fail to engage in reasonable efforts to conclude processing of the application by failing to reply to the Notice to File Missing Parts of Application mailed March 23, 2005 within the three-month period provided for in 37 CFR 1.704(b). Applicants did not file a complete response until August 23, 2005. Accordingly, a period of reduction of 61 days is being entered for the period beginning on June 24, 2005, the day after the date that is three months after the date of mailing of the Notice, and ending on August 23, 2005, the date applicants' reply was filed.

In addition, the Office finds applicants failed to engage in reasonable efforts to conclude processing of the application in connection with the filing of the April 6, 2009 Information Disclosure Statement.

Specifically, a reduction of 45 days should have been entered based on 37 CFR 1.704(c)(10). 37 CFR 1.704(c) provides that:

> Circumstances that constitute a failure of the applicant to engage in reasonable efforts to conclude processing or examination of an application also include the following circumstances, which will result in the following reduction of the period of adjustment set forth in § 1.703 to the extent that the periods are not overlapping:
>
> (10) Submission of an amendment under § 1.312 or other paper after a notice of allowance has been given or mailed, in which case the period of adjustment set forth in § 1.703 shall be reduced by the lesser of:
>
> (i) The number of days, if any, beginning on the date the amendment under § 1.312 or other paper was filed and ending on the mailing date of the Office action or notice in response to the amendment under § 1.312 or such other paper;
>
> or
>
> (ii) Four months;

In this instance, it is undisputed that an Information Disclosure Statement (IDS) which was not compliant with 37 CFR 1.97 and 1.99 and a Request for Continued Examination (RCE) were filed after the mailing of the March 13, 2009 Notice of Allowance. The RCE and IDS were not addressed until a second Notice of Allowance was mailed on May 20, 2009. Accordingly, a period of reduction of 45 days is being entered for the period beginning on April 6, 2009, the date the RCE and IDS were filed, and ending on May 20, 2009, the date a notice in response was mailed.

With respect to the fact that a terminal disclaimer has been filed in this application, 35 U.S.C. 154(b)(2)(B) provides that:

> No patent the term of which has been disclaimed beyond a specified date may be adjusted under this section beyond the expiration date specified in the disclaimer.

37 CFR § 1.703(g) provides that:

> No patent, the term of which has been disclaimed beyond a specified date, shall be adjusted under § 1.702 and this

section beyond the expiration date specified in the disclaimer.

The provisions of § 154(b), for adjustment due to examination delay, apply to original applications[1], other than designs, filed on or after May 29, 2000. The Office calculates patent term adjustment for examination delay in all eligible applications. In calculating the patent term adjustment, the Office does not differentiate between applications that have terminal disclaimers and those that do not. Nor does the Office undertake the burdensome task of reviewing every application with a terminal disclaimer to determine if the patent term adjustment accorded would adjust the term beyond the expiration date specified in the disclaimer.

Rather, on issuance of the application, in compliance with 35 U.S.C. 154(b) and 37 CFR § 1.703(g), it is indicated in the patent that the patent term adjustment indicated therein is subject to any disclaimer. Moreover, it is also stated therein that the patent is subject to a terminal disclaimer.

In view thereof, the determination of Patent Term Adjustment at the time of the mailing of the notice of allowance is five hundred and four (504) days (619 days of Office delay reduced by 115 (61 + 9 + 45) days of applicant delay).

As this letter was submitted as an advisement to the Office of an error in Applicants' favor, the Office will not assess the $200.00 fee under 37 CFR 1.18(e). The Office thanks applicants for their good faith and candor in bringing this to the attention of the Office.

The Office of Data Management has been advised of this decision. The application is, thereby, forwarded to the Office of Data Management for issuance of the application. The patent term adjustment indicated on the patent (as shown on the Issue Notification mailed about three weeks prior to patent issuance) will include any additional adjustment accrued both for Office delay in issuing the patent more than four months after payment of the issue fee and satisfaction of all outstanding requirements, and for the Office taking in excess of three years

---

[1] Since a continued prosecution application (CPA) under § 1.53(d) is a new application, the filing of a CPA application on or after May 29, 2000, in an application filed before May 29, 2000 causes the application (CPA) to be eligible for patent term adjustment.

to issue the patent (to the extent that the three-year period does not overlap with periods already accorded).

Telephone inquiries specific to this matter should be directed to Senior Petitions Attorney Shirene Willis Brantley at (571) 272-3230.

Nancy Johnson
Senior Petitions Attorney
Office of Petitions

Enclosure: Copy of adjusted PALM calculation

Day : Monday
Date: 11/9/2009

PALM INTRANET

Time: 18:28:32

PTA Calculations for Application: 11/067377			
Application Filing Date:	02/25/2005	PTO Delay (PTO):	619
Issue Date of Patent:		Three Years:	0
Pre-Issue Petitions:	0	Applicant Delay (APPL):	9
Post-Issue Petitions:	0	Total PTA (days):	504
PTO Delay Adjustment:	-106		

File Contents History

Number	Date	Contents Description	PTO	APPL	START
97	11/09/2009	ADJUSTMENT OF PTA CALCULATION BY PTO		45	
96	11/09/2009	ADJUSTMENT OF PTA CALCULATION BY PTO		61	
87	05/20/2009	MAIL NOTICE OF ALLOWANCE			
86	05/19/2009	ISSUE REVISION COMPLETED			
85	05/19/2009	DOCUMENT VERIFICATION			
84	05/19/2009	NOTICE OF ALLOWANCE DATA VERIFICATION COMPLETED			
83	05/19/2009	CASE DOCKETED TO EXAMINER IN GAU			
82	05/13/2009	NOTICE OF ALLOWABILITY			
81	04/06/2009	INFORMATION DISCLOSURE STATEMENT CONSIDERED			
80	04/16/2009	DATE FORWARDED TO EXAMINER			
79	04/06/2009	REQUEST FOR CONTINUED EXAMINATION (RCE)			
78	04/16/2009	DISPOSAL FOR A RCE/CPA/129 (EXPRESS ABANDONMENT IF CPA)			
77	04/06/2009	INFORMATION DISCLOSURE STATEMENT (IDS) FILED			
76	04/06/2009	INFORMATION DISCLOSURE STATEMENT (IDS) FILED			
75	04/06/2009	WORKFLOW - REQUEST FOR RCE - BEGIN			
74	03/16/2009	EXPORT TO INITIAL DATA CAPTURE			
73	03/13/2009	MAIL NOTICE OF ALLOWANCE			
72	03/12/2009	ISSUE REVISION COMPLETED			
71	03/11/2009	ALLOWED CASE RETURNED TO THE EXAMINER FOR CLERICAL PROCESSING			
70	03/11/2009	DOCUMENT VERIFICATION			
		NOTICE OF ALLOWANCE DATA VERIFICATION			

69	03/11/2009	COMPLETED			
68	03/11/2009	NOTICE OF ALLOWABILITY			
67	02/19/2009	PARALEGAL TD ACCEPTED			
66	12/16/2008	TERMINAL DISCLAIMER FILED		0	63
65	12/16/2008	TERMINAL DISCLAIMER FILED			
64	02/09/2009	DATE FORWARDED TO EXAMINER			
63	12/16/2008	RESPONSE AFTER NON-FINAL ACTION			
62	10/02/2008	MAIL NON-FINAL REJECTION			
61	09/29/2008	NON-FINAL REJECTION			
59	04/21/2008	INFORMATION DISCLOSURE STATEMENT CONSIDERED			
58	06/17/2008	INFORMATION DISCLOSURE STATEMENT CONSIDERED			
57	07/24/2008	INFORMATION DISCLOSURE STATEMENT CONSIDERED			
55	09/04/2008	DATE FORWARDED TO EXAMINER			
54	07/24/2008	RESPONSE AFTER NON-FINAL ACTION		9	45
53	07/24/2008	REQUEST FOR EXTENSION OF TIME - GRANTED			
52	07/24/2008	INFORMATION DISCLOSURE STATEMENT (IDS) FILED			
51	07/24/2008	INFORMATION DISCLOSURE STATEMENT (IDS) FILED			
50	06/17/2008	REFERENCE CAPTURE ON IDS			
49	06/17/2008	INFORMATION DISCLOSURE STATEMENT (IDS) FILED			
48	06/17/2008	INFORMATION DISCLOSURE STATEMENT (IDS) FILED			
47	04/21/2008	INFORMATION DISCLOSURE STATEMENT (IDS) FILED			
46	04/21/2008	INFORMATION DISCLOSURE STATEMENT (IDS) FILED			
45	04/15/2008	MAIL NON-FINAL REJECTION			
44	04/14/2008	NON-FINAL REJECTION			
40	11/01/2005	INFORMATION DISCLOSURE STATEMENT CONSIDERED			
39	06/01/2006	INFORMATION DISCLOSURE STATEMENT CONSIDERED			
38	08/18/2006	INFORMATION DISCLOSURE STATEMENT CONSIDERED			
		INFORMATION DISCLOSURE STATEMENT			

37	07/26/2006	CONSIDERED			
36	01/30/2007	INFORMATION DISCLOSURE STATEMENT CONSIDERED			
35	11/12/2007	INFORMATION DISCLOSURE STATEMENT CONSIDERED			
34	02/28/2008	DATE FORWARDED TO EXAMINER			
33	01/23/2008	RESPONSE TO ELECTION / RESTRICTION FILED			
32	01/04/2008	MAIL RESTRICTION REQUIREMENT	619		-1
31	01/04/2008	REQUIREMENT FOR RESTRICTION / ELECTION			
30	11/13/2007	INFORMATION DISCLOSURE STATEMENT (IDS) FILED			
29	11/12/2007	INFORMATION DISCLOSURE STATEMENT (IDS) FILED			
26	07/24/2007	CASE DOCKETED TO EXAMINER IN GAU			
25.7	01/30/2007	INFORMATION DISCLOSURE STATEMENT (IDS) FILED			
25	01/30/2007	INFORMATION DISCLOSURE STATEMENT (IDS) FILED			
24	01/08/2007	CASE DOCKETED TO EXAMINER IN GAU			
23	10/30/2006	PRELIMINARY AMENDMENT			
22	11/02/2006	IFW TSS PROCESSING BY TECH CENTER COMPLETE			
21	07/26/2006	REFERENCE CAPTURE ON IDS			
20.7	07/26/2006	INFORMATION DISCLOSURE STATEMENT (IDS) FILED			
20	07/26/2006	INFORMATION DISCLOSURE STATEMENT (IDS) FILED			
19.7	08/18/2006	INFORMATION DISCLOSURE STATEMENT (IDS) FILED			
19	08/18/2006	INFORMATION DISCLOSURE STATEMENT (IDS) FILED			
18	08/16/2006	RULE 47 / 48 CORRECTION OF INVENTORSHIP PAPERS FILED			
17	06/01/2006	REFERENCE CAPTURE ON IDS			
16.7	06/01/2006	INFORMATION DISCLOSURE STATEMENT (IDS) FILED			
16	06/01/2006	INFORMATION DISCLOSURE STATEMENT (IDS) FILED			
15	03/30/2006	CORRESPONDENCE ADDRESS CHANGE			
14	02/21/2006	CORRESPONDENCE ADDRESS CHANGE			
13	11/01/2005	REFERENCE CAPTURE ON IDS			

12.7	11/01/2005	INFORMATION DISCLOSURE STATEMENT (IDS) FILED			
12	11/01/2005	INFORMATION DISCLOSURE STATEMENT (IDS) FILED			
11	09/06/2005	APPLICATION RETURN FROM OIPE			
10	09/06/2005	APPLICATION IS NOW COMPLETE			
9	09/06/2005	APPLICATION RETURN TO OIPE			
8	09/06/2005	APPLICATION DISPATCHED FROM OIPE			
7	09/06/2005	APPLICATION IS NOW COMPLETE			
6	08/23/2005	ADDITIONAL APPLICATION FILING FEES			
5	08/23/2005	A STATEMENT BY ONE OR MORE INVENTORS SATISFYING THE REQUIREMENT UNDER 35 USC 115, OATH OF THE APPLIC			
3	03/18/2005	CLEARED BY OIPE CSR			
2	03/13/2005	IFW SCAN & PACR AUTO SECURITY REVIEW			
1	02/25/2005	INITIAL EXAM TEAM NN			

Search Another: Application# Search

EXPLANATION OF PTA CALCULATION

EXPLANATION OF PTE CALCULATION

To go back, right click here and select Back. To go forward, right click here and select Forward. To refresh, right click here and select Refresh.

Back to OASIS | Home page

UNITED STATES PATENT AND TRADEMARK OFFICE

Commissioner for Patents
United States Patent and Trademark Office
P.O. Box 1450
Alexandria, VA 22313-1450
www.uspto.gov

MERCHANT & GOULD (MICROSOFT)
P.O. BOX 2903
MINNEAPOLIS MN 55402-0903

COPY MAILED

JUL 21 2008

OFFICE OF PETITIONS

In re Application of :
DAVIS, et al. :
Application No. 11/067,383 : DECISION GRANTING PETITION
Filed: March 25, 2005 : UNDER 37 CFR 1.313(c)(2)
Attorney Docket No. **14917.0062US1/MS310654.1** :

This is a decision on the petition under 37 CFR 1.313(c)(2), filed July 18, 2008, to withdraw the above-identified application from issue after payment of the issue fee.

The petition is **GRANTED.**

The above-identified application is withdrawn from issue for consideration of a submission under 37 CFR 1.114 (request for continued examination). *See* 37 CFR 1.313(c)(2).

Petitioner is advised that the issue fee paid on June 16, 2008 cannot be refunded. If, however, this application is again allowed, petitioner may request that it be applied towards the issue fee required by the new Notice of Allowance.[1]

Telephone inquiries should be directed to the undersigned at (571) 272-7253.

This application is being referred to Technology Center AU 2165 for processing of the request for continued examination under 37 CFR 1.114 and for consideration of the concurrently filed information disclosure statement.

Monica A. Graves
Petitions Examiner
Office of Petitions

---

[1] *The request to apply the issue fee to the new Notice may be satisfied by completing and returning the new Part B – Fee(s) Transmittal Form (along with any balance due at the time of submission). Petitioner is advised that the Issue Fee Transmittal Form* ***must*** *be completed and timely submitted to avoid abandonment of the application.*

UNITED STATES PATENT AND TRADEMARK OFFICE

UNITED STATES DEPARTMENT OF COMMERCE
United States Patent and Trademark Office
Address: COMMISSIONER FOR PATENTS
P.O. Box 1450
Alexandria, Virginia 22313-1450
www.uspto.gov

JOHN EDWARD ROETHEL
769 Basque Way #200
Carson City, NV 89706

Mail Date: 04/21/2010

Applicant	: Ernest W. Moody	: DECISION ON REQUEST FOR
Patent Number	: 7581730	: RECALCULATION of PATENT
Issue Date	: 09/01/2009	: TERM ADJUSTMENT IN VIEW
Appliction No	: 11/067,386	: OF WYETH AND NOTICE OF INTENT TO
Filed	: 02/26/2005	: ISSUE CERTIFICATE OF CORRECTION
		:

The Request for Recalculation is **GRANTED** to the extent indicated.

The patent term adjustment has been determined to be **660** days. The USPTO will *sua sponte* issue a certificate of correction reflecting the amount of PTA days determined by the recalculation.

Prior to the issuance of the certificate of correction, the USPTO will afford patentee an opportunity to be heard and request reconsideration. Accordingly, patentee has **one month or thirty (30) days**, whichever is longer, to file a request for reconsideration of this patent term adjustment calculation. See 35 U.S.C. 154(b)(3)(B)(ii) and 37 CFR 1.322(a)(4). No extensions of time will be granted under 37 CFR 1.136.

Patentee should use document code PET.OP if electronically filing a request for reconsideration of this patent term adjustment calculation. The patentee must also include the information required by 37 CFR 1.705(b)(2) and the fee required by 37 CFR 1.18(e). If patentee does not file a timely request for reconsideration of this patent term adjustment calculation including the information required by 37 CFR 1.705(b)(2) and the fee required by 37 CFR 1.18(e), the USPTO will issue a certificate of correction reflecting the PTA determination noted above.

Patentee should be aware that in order to preserve the right to review in the United States District Court for the District of Columbia of the USPTO patent term adjustment determination, patentee must ensure that he or she also take the steps required under 35 U.S.C. 154(b)(4)(A) in a timely manner. Nothing in the request for recalculation should be construed as providing an alternative time frame for commencing a civil action under 35 U.S.C. 154(b)(4)(A).

Any questions concerning this decision should be directed to the Office of Patent Legal Administration at 571-272-7702.

UNITED STATES PATENT AND TRADEMARK OFFICE

Commissioner for Patents
United States Patent and Trademark Office
P.O. Box 1450
Alexandria, VA 22313-1450
www.uspto.gov

HANES & SCHUTZ, LLC
102 SOUTH TEJON ST.
SUITE 800
COLORADO SPRINGS CO 80903

COPY MAILED

JAN 0 6 2006

OFFICE OF PETITIONS

In re Application of	:	
Dillon, William M.	:	
Application No. 11/067,408	:	ON PETITION
Filed: February 28, 2005	:	
Attorney Docket No. 770.1000	:	

This is a decision on the petition under 37 CFR 1.102(c)(1), filed October 7, 2005, to make the above-identified application special based on applicant's age as set forth in M.P.E.P. § 708.02, Section IV.

The petition is **GRANTED**.

A grantable petition to make an application special under 37 CFR 1.102(c)(1) and MPEP § 708.02, Section IV: Applicant's Age must be accompanied by evidence showing that at least one of the applicants is 65 years of age, or more, such as a birth certificate or a statement by applicant. No fee is required.

The instant petition includes an affidavit signed by the applicant. Accordingly, the above-identified application has been accorded "special" status.

Telephone inquiries concerning this decision should be directed to Petitions Examiner Liana Chase at 571-272-3206.

All other inquiries concerning either the examination or status of the application should be directed to the Technology Center.

This matter is being referred to the Technology Center Art Unit 3743 for action on the merits commensurate with this decision.

for

David Bucci
Petitions Examiner
Office of Petitions

UNITED STATES PATENT AND TRADEMARK OFFICE

Commissioner for Patents
United States Patent and Trademark Office
P.O. Box 1450
Alexandria, VA 22313-1450
www.uspto.gov

Paper No.

HOGAN & HARTSON LLP
ONE TABOR CENTER, SUITE 1500
1200 SEVENTEENTH ST
DENVER CO 80202

COPY MAILED

MAR 3 1 2008

OFFICE OF PETITIONS

In re Application of	:	
William Dillon	:	DECISION ON
Application No. 11/067,408	:	PETITION
Filed: February 28, 2005	:	
Attorney Docket No. 770.1000	:	

This is a decision on the PETITION FOR REVIVAL OF AN APPLICATION FOR PATENT ABANDONED UNINTENTIONALLY UNDER 37 CFR 1.137(b), filed December 4, 2007.

The petition is **GRANTED**.

The above-identified application was abandoned for failure to timely file a proper reply to the final Office action mailed February 2, 2007. This Office action set a shortened statutory period for reply of three (3) months from the mail date of the action, with extensions of time obtainable under 37 CFR 1.136(a). No proper reply having been received and no extension of time obtained, the application became abandoned effective May 3, 2007. A courtesy Notice of Abandonment was mailed on September 5, 2007.

On petition, petitioner submitted the required reply in the form of a Request for Continued Examination (RCE) and submission under §1.114 (in the form of an amendment); paid the petition fee; and made the required statement of unintentional delay.

The statement of unintentional delay was signed by registered practitioner Michael Martensen, who was not appointed as an

attorney of record in this application until after its abandonment. Thus, it is not apparent whether the person signing the statement of unintentional delay was in a position to have firsthand or direct knowledge of the facts and circumstances of the delay at issue. Nevertheless, such statement is being treated as having been made as the result of a reasonable inquiry into the facts and circumstances of such delay. See 37 CFR 10.18(b) and Changes to Patent Practice and Procedure; Final Rule Notice, 62 Fed. Reg. 53131, 53178 (October 10, 1997), 1203 Off. Gaz. Pat. Office 63, 103 (October 21, 1997). In the event that such an inquiry has not been made, petitioner must make such an inquiry. If such inquiry results in the discovery that it is not correct that the entire delay in filing the required reply from the due date for the reply until the filing of a grantable petition pursuant to 37 CFR 1.137(b) was unintentional, petitioner must notify the Office.

Technology Center AU 3772 has been advised of this decision. The application is, thereby, forwarded to the examiner for consideration of the RCE and submission submitted on petition filed December 4, 2007.

Telephone inquiries concerning this decision should be directed to the undersigned at (571) 272-3219.

Nancy Johnson
Senior Petitions Attorney
Office of Petitions

PTO/SB/130 (03-08)
Approved for use through 06/30/2008. OMB 0651- 0031
U.S. Patent and Trademark Office; U.S. DEPARTMENT OF COMMERCE
Under the Paperwork Reduction Act of 1995, no persons are required to respond to a collection of information unless it contains a valid OMB control number

PETITION TO MAKE SPECIAL BASED ON AGE FOR ADVANCEMENT OF EXAMINATION UNDER 37 CFR 1.102(c)(1)

Application Information

Application Number	11067408	Confirmation Number	4789	Filing Date	2005-02-28
Attorney Docket Number (optional)	770.1000	Art Unit	3772	Examiner	Lewis, Kiandra Charle
First Named Inventor	William Dillon				
Title of Invention	Blindfolding Device				

Attention: Office of Petitions

An application may be made special for advancement of examination upon filing of a petition showing that the applicant is 65 years of age, or more. No fee is required with such a petition. See 37 CFR 1.102(c)(1) and MPEP 708.02 (IV).

APPLICANT HEREBY PETITIONS TO MAKE SPECIAL FOR ADVANCEMENT OF EXAMINATION IN THIS APPLICATION UNDER 37 CFR 1.102(c)(1) and MPEP 708.02 (IV) ON THE BASIS OF THE APPLICANT'S AGE.

A grantable petition requires one of the following items:
(1) Statement by one named inventor in the application that he/she is 65 years of age, or more; or
(2) Certification by a registered attorney/agent having evidence such as a birth certificate, passport, driver's license, etc. showing one named inventor in the application is 65 years of age, or more.

Name of Inventor who is 65 years of age, or older

Given Name	Middle Name	Family Name	Suffix
William		Dillon	

A signature of the applicant or representative is required in accordance with 37 CFR 1.33 and 10.18.
Please see 37 CFR 1.4(d) for the format of the signature.

Select (1) or (2) :

○ (1) I am an inventor in this application and I am 65 years of age, or more.

◉ (2) I am an attorney or agent registered to practice before the Patent and Trademark Office, and I certify that I am in possession of evidence, and will retain such in the application file record, showing that the inventor listed above is 65 years of age, or more.

Signature	/william j. kubida/	Date (YYYY-MM-DD)	2008-06-09
Name	William J. Kubida	Registration Number	29664

Under the Paperwork Reduction Act of 1995, no persons are required to respond to a collection of information unless it contains a valid OMB control number

Privacy Act Statement

The Privacy Act of 1974 (P.L. 93-579) requires that you be given certain information in connection with your submission of the attached form related to a patent application or patent. Accordingly, pursuant to the requirements of the Act, please be advised that: (1) the general authority for the collection of this information is 35 U.S.C. 2(b)(2); (2) furnishing of the information solicited is voluntary; and (3) the principal purpose for which the information is used by the U.S. Patent and Trademark Office is to process and/or examine your submission related to a patent application or patent. If you do not furnish the requested information, the U.S. Patent and Trademark Office may not be able to process and/or examine your submission, which may result in termination of proceedings or abandonment of the application or expiration of the patent.

The information provided by you in this form will be subject to the following routine uses:

1. The information on this form will be treated confidentially to the extent allowed under the Freedom of Information Act (5 U.S.C. 552) and the Privacy Act (5 U.S.C. 552a). Records from this system of records may be disclosed to the Department of Justice to determine whether the Fr eedom of Information Act requires disclosure of these records.

2. A record from this system of records may be disclosed, as a routine use, in the course of presenting evidence to a court, magistrate, or administrative tribunal, including disclosures to opposing counsel in the course of settlement negotiations.

3. A record in this system of records may be disclosed, as a routine use, to a Member of Congress submitting a request involving an individual, to whom the record pertains, when the individual has requested assistance from the Member with respect to the subject matter of the record.

4. A record in this system of records may be disclosed, as a routine use, to a contractor of the Agency having need for the information in order to perform a contract. Recipients of information shall be required to comply with the requirements of the Privacy Act of 1974, as amended, pursuant to 5 U.S.C. 552a(m).

5. A record related to an International Application filed under the Patent Cooperation Treaty in this system of records may be disclosed, as a routine use, to the International Bureau of the World Intellectual Property Organization, pursuant to the Patent Cooperation Treaty.

6. A record in this system of records may be disclosed, as a routine use, to another federal agency for purposes of National Security review (35 U.S.C. 181) and for review pursuant to the Atomic Energy Act (42 U.S.C. 218(c)).

7. A record from this system of records may be disclosed, as a routine use, to the Administrator, General Services, or his/her designee, during an inspection of records conducted by GSA as part of that agency's responsibility to recommend improvements in records management practices and programs, under authority of 44 U.S.C. 2904 and 2906. Such disclosure shall be made in accordance with the GSA regulations governing inspection of records for this purpose, and any other relevant (i.e., GSA or Commerce) directive. Such disclosure shall not be used to make determinations about indivi duals.

8. A record from this system of records may be disclosed, as a routine use, to the public after either publication of the application pursuant to 35 U.S.C. 122(b) or issuance of a patent pursuant to 35 U.S.C. 151. Further, a record may be disclosed, subject to the limitations of 37 CFR 1.14, as a routine use, to the public if the record was filed in an application which became abandoned or in which the proceedings were terminated and which application is referenced by either a published application, an application open to public inspections or an issued patent.

9. A record from this system of records may be disclosed, as a routine use, to a Federal, State, or local law enforcement agency, if the USPTO becomes aware of a violation or potential violation of law or regulation.

UNITED STATES PATENT AND TRADEMARK OFFICE

Commissioner for Patents
United States Patent and Trademark Office
P.O. Box 1450
Alexandria, VA 22313-1450
www.uspto.gov

In re Application of
William W. Dillon

Application No. 11067408

Filed: February 28,2005

Attorney Docket No. 770.1000

:DECISION ON PETITION TO MAKE SPECIAL
:UNDER 37 CFR 1.102(c)(1)

This is a decision on the electronic petition under 37 CFR 1.102 (c)(1) ,filed 12-JUN-2008 to make the above-identified application special based on applicant's age as set forth in MPEP § 708.02, Section IV.

The petition is **GRANTED**.

A grantable petition to make an application special under 37 CFR 1.102(c)(1), MPEP § 708.02, Section IV: Applicant's Age must include a statement by applicant or a registered practitioner having evidence that applicant is at least 65 years of age. No fee is required.

Accordingly, the above-identified application has been accorded “special” status and will be taken up for action by the examiner upon the completion of all pre-examination processing.

Telephone inquires concerning this electronic decision should be directed to the Electronic Business Center at 866-217-9197.

All other inquires concerning either the examination or status of the application should be directed to the Technology Center.

UNITED STATES PATENT AND TRADEMARK OFFICE

Commissioner for Patents
United States Patent and Trademark Office
P.O. Box 1450
Alexandria, VA 22313-1450
www.uspto.gov

SILICON VALLEY PATENT GROUP LLP
2350 MISSION COLLEGE BOULEVARD
SUITE 360
SANTA CLARA CA 95054

COPY MAILED

MAR 19 2007

OFFICE OF PETITIONS

In re Application of	:	
Richard K. Williams et al.	:	
Application No. 11/067,421	:	DECISION GRANTING PETITION
Filed: February 25, 2005	:	UNDER 37 CFR 1.313(c)(2)
Attorney Docket No. AAT011-5C-US	:	

This is a decision on the petition under 37 CFR 1.313(c)(2), filed March 9, 2007, to withdraw the above-identified application from issue after payment of the issue fee.

The petition is **GRANTED**.

The above-identified application is withdrawn from issue for consideration of a submission under 37 CFR 1.114 (request for continued examination). *See* 37 CFR 1.313(c)(2).

Petitioner is advised that the issue fee paid on February 23, 2007 cannot be refunded. If, however, this application is again allowed, petitioner may request that it be applied towards the issue fee required by the new Notice of Allowance.[1]

Telephone inquiries should be directed to Terri Williams at (571) 272-2991.

This application is being referred to Technology Center AU 2812 for processing of the request for continued examination under 37 CFR 1.114 and for consideration of the concurrently filed Information Disclosure Statement.

Karen Creasy

Karen Creasy
Petitions Examiner
Office of Petitions

---

[1] *The request to apply the issue fee to the new Notice may be satisfied by completing and returning the new Part B – Fee(s) Transmittal Form (along with any balance due at the time of submission). Petitioner is advised that the Issue Fee Transmittal Form* ***must*** *be completed and timely submitted to avoid abandonment of the application.*

UNITED STATES PATENT AND TRADEMARK OFFICE

Commissioner for Patents
United States Patent and Trademark Office
P.O. Box 1450
Alexandria, VA 22313-1450
www.uspto.gov

MERCHANT & GOULD PC
PO BOX 2903
MINNEAPOLIS MN 55402-0903

COPY MAILED

AUG 18 2005

OFFICE OF PETITIONS

In re Application of :
Hannoufa, et al. :
Application No. 11/067,425 : DECISION ON PETITION
Filed: February 22, 2005 :
Attorney Docket No. 00270.0078USI1 :

This is a decision on the "PETITION TO ACCORD A FILING DATE", filed July 11, 2005, requesting, in effect, that a "Notice to File Missing Parts" mailed May 10, 2005 in the above-identified application be withdrawn.

The application was filed on February 22, 2005. However, on May 10, 2005, the Initial Patent Examination Division mailed a "Notice to File Missing Parts of Nonprovisional Application". The Notice informed applicants, *inter alia*, that the application had been accorded a filing date. However, Figures 1,5,6,7 and 8 as described in the specification appeared to have been omitted.

In response, the present petition was filed. Petitioners explain that Figures 1,5,6,7,8 were not missing on February 22, 2005. In support thereof, petitioners have included a postcard receipt itemizing 37 sheets of drawings.

It is obvious from the petition that no drawings were actually missing on February 22, 2005. Rather, Figure 1 consisted of Figures 1A-1E, Figure 5 consisted of Figures 5A-5D, Figure 6 consisted of Figures 6A-6B, Figure 7 consisted of Figures 7A-7B, and Figure 8 consisted of Figures 8A-8B. However, the specification referred to Figures 1,5,6,7 and 8, in addition to the subparts for each figure. Accordingly, the "Notice to File Missing Parts of Nonprovisional Application" mailed May 10, 2005 was correct in stating that Figures 1,5,6,7 and 8 described in the specification <u>appeared</u> to have been omitted. Therefore, the "Notice" was properly mailed and will not be withdrawn.

The petition is **DISMISSED**.

Since the present petition was not necessitated by any error on the part of the Office, the $400 petition fee will not be refunded.

The application is being returned to the Office of Initial Patent Examination for further processing with a filing date of February 22, 2005, using the 37 sheets of drawings filed on that date.

Telephone inquiries concerning this decision may be directed to the undersigned at 571-272-3207.

Cliff Congo
Petitions Attorney
Office of Petitions

UNITED STATES PATENT AND TRADEMARK OFFICE

Commissioner for Patents
United States Patent and Trademark Office
P.O. Box 1450
Alexandria, VA 22313-1450
www.uspto.gov

PHARMACIA CORPORATION
GLOBAL PATENT DEPARTMENT
PO BOX 1027
ST LOUIS MO 63006

COPY MAILED

NOV 23 2005

OFFICE OF PETITIONS

In re Application of	:	
Fedde, et al.	:	
Application No. 11/067,426	:	DECISION ON PETITION
Filed: February 25, 2005	:	
Attorney Docket No. C-3376/1A	:	

This is a decision on the paper titled "PETITION UNDER 37 CFR 1.57(a)", filed April 25, 2005, which is properly treated as a petition under 37 CFR 1.182 requesting that the above-identified application be accorded a filing date of February 25, 2005.

The instant application was deposited on February 25, 2005, claiming the benefit of priority to application 60/228,738. However, the instant application omitted a copy of the drawings. Accordingly, on March 23, 2005, the Office of Initial Patent Examination properly mailed a "Notice of Incomplete Nonprovisional Application", requiring drawings and stating that the filing date would be the date of receipt of the drawings.

In response, applicants filed the present petition on April 25, 2005, together with a copy of the omitted drawings. Petitioners do not dispute the fact that no drawings were filed in the instant application. Rather, petitioners point out that they incorporated application 60/228,738 via a priority claim pursuant to 37 CFR 1.57(a).

With respect to the practice of incorporation by reference, the Manual of Patent Examining Procedure states:

> Material needed to accord an application a filing date may not be incorporated by reference. Therefore, if a continuation or divisional application as originally filed incorporates by reference material omitted from the application papers, which is needed to accord the application a filing date, the application will not be entitled to a filing date. A petition under 37 CFR 1.182 and the required petition fee, including an amendment submitting the necessary omitted material, requesting that the necessary omitted material contained in the prior application and submitted in the amendment, be included in the continuation or divisional application based upon the incorporation by reference statement, is required in order to accord the application a filing date as of the date of deposit of the continuation or divisional application. An amendment submitting the omitted material and relying upon the incorporation by reference will not be entered in the continuation or divisional application unless a decision granting the petition states that the application is accorded a filing date and that the amendment will be entered.[1]

Incorporation by reference is intended as a safeguard to protect an applicant who in a continuation or divisional application has omitted a "portion" of the application on filing.[2] Here, applicants omitted drawings in their entirety. As at least one drawing was necessary to accord the instant application a filing date, no filing date was able to be accorded at the time of filing. However, petitioners incorporated application 60/228,738 via a priority claim pursuant to 37 CFR 1.57(a). In addition, petitioners submitted the omitted drawings and the $400 petition fee. Accordingly, the application is entitled to a filing date of February 25, 2005.

In view thereof, the petition is **GRANTED**.

The application is being forwarded to the Office of Initial Patent Examination (OIPE) for further processing with a filing date of February 25, 2005, using the application papers received in the Office on that date and the thirty-three (33) sheets of drawings supplied on petition filed April 25, 2005. Applicants will receive appropriate notifications regarding the fees owed, if any, and other information in due course from OIPE.

Telephone inquiries specific to this decision should be directed to the undersigned at 571-272-3207.

Cliff Congo
Petitions Attorney
Office of Petitions

---

[1] MPEP 201.06(c) (emphasis added).

[2] See id.

UNITED STATES PATENT AND TRADEMARK OFFICE

UNITED STATES DEPARTMENT OF COMMERCE
United States Patent and Trademark Office
Address: COMMISSIONER FOR PATENTS
P.O. Box 1450
Alexandria, Virginia 22313-1450
www.uspto.gov

THE PROCTER & GAMBLE COMPANY
Global Legal Department - IP
Sycamore Building - 4th Floor
299 East Sixth Street
CINCINNATI, OH 45202

Mail Date: 04/21/2010

Applicant	: Kevin Benson McNeil	: DECISION ON REQUEST FOR
Patent Number	: 7611582	: RECALCULATION of PATENT
Issue Date	: 11/03/2009	: TERM ADJUSTMENT IN VIEW
Appliction No	: 11/067,437	: OF WYETH AND NOTICE OF INTENT TO
Filed	: 02/25/2005	: ISSUE CERTIFICATE OF CORRECTION
		:

The Request for Recalculation is **GRANTED** to the extent indicated.

The patent term adjustment has been determined to be **719** days. The USPTO will *sua sponte* issue a certificate of correction reflecting the amount of PTA days determined by the recalculation.

Prior to the issuance of the certificate of correction, the USPTO will afford patentee an opportunity to be heard and request reconsideration. Accordingly, patentee has **one month or thirty (30) days**, whichever is longer, to file a request for reconsideration of this patent term adjustment calculation. See 35 U.S.C. 154(b)(3)(B)(ii) and 37 CFR 1.322(a)(4). No extensions of time will be granted under 37 CFR 1.136.

Patentee should use document code PET.OP if electronically filing a request for reconsideration of this patent term adjustment calculation. The patentee must also include the information required by 37 CFR 1.705(b)(2) and the fee required by 37 CFR 1.18(e). If patentee does not file a timely request for reconsideration of this patent term adjustment calculation including the information required by 37 CFR 1.705(b)(2) and the fee required by 37 CFR 1.18(e), the USPTO will issue a certificate of correction reflecting the PTA determination noted above.

Patentee should be aware that in order to preserve the right to review in the United States District Court for the District of Columbia of the USPTO patent term adjustment determination, patentee must ensure that he or she also take the steps required under 35 U.S.C. 154(b)(4)(A) in a timely manner. Nothing in the request for recalculation should be construed as providing an alternative time frame for commencing a civil action under 35 U.S.C. 154(b)(4)(A).

Any questions concerning this decision should be directed to the Office of Patent Legal Administration at 571-272-7702.

UNITED STATES PATENT AND TRADEMARK OFFICE

UNITED STATES DEPARTMENT OF COMMERCE
United States Patent and Trademark Office
Address: COMMISSIONER FOR PATENTS
P.O. Box 1450
Alexandria, Virginia 22313-1450
www.uspto.gov

LOCKE LORD BISSELL & LIDDELL LLP
ATTN: IP DOCKETING
600 TRAVIS
SUITE 3400
HOUSTON, TX 77002-3095

Mail Date: 05/28/2010

Applicant	: Richard Testardi	: DECISION ON REQUEST FOR
Patent Number	: 7624109	: RECALCULATION of PATENT
Issue Date	: 11/24/2009	: TERM ADJUSTMENT IN VIEW
Application No	: 11/067,453	: OF WYETH AND NOTICE OF INTENT TO
Filed	: 02/25/2005	: ISSUE CERTIFICATE OF CORRECTION
		:

The Request for Recalculation is **GRANTED** to the extent indicated.

The patent term adjustment has been determined to be **520** days. The USPTO will *sua sponte* issue a certificate of correction reflecting the amount of PTA days determined by the recalculation.

Prior to the issuance of the certificate of correction, the USPTO will afford patentee an opportunity to be heard and request reconsideration. Accordingly, patentee has **one month or thirty (30) days**, whichever is longer, to file a request for reconsideration of this patent term adjustment calculation. See 35 U.S.C. 154(b)(3)(B)(ii) and 37 CFR 1.322(a)(4). No extensions of time will be granted under 37 CFR 1.136.

Patentee should use document code PET.OP if electronically filing a request for reconsideration of this patent term adjustment calculation. The patentee must also include the information required by 37 CFR 1.705(b)(2) and the fee required by 37 CFR 1.18(e). If patentee does not file a timely request for reconsideration of this patent term adjustment calculation including the information required by 37 CFR 1.705(b)(2) and the fee required by 37 CFR 1.18(e), the USPTO will issue a certificate of correction reflecting the PTA determination noted above.

Patentee should be aware that in order to preserve the right to review in the United States District Court for the District of Columbia of the USPTO patent term adjustment determination, patentee must ensure that he or she also take the steps required under 35 U.S.C. 154(b)(4)(A) in a timely manner. Nothing in the request for recalculation should be construed as providing an alternative time frame for commencing a civil action under 35 U.S.C. 154(b)(4)(A).

Any questions concerning this decision should be directed to the Office of Patent Legal Administration at 571-272-7702.

UNITED STATES PATENT AND TRADEMARK OFFICE

Commissioner for Patents
United States Patent and Trademark Office
P.O. Box 1450
Alexandria, VA 22313-1450
www.uspto.gov

HOVEY WILLIAMS LLP
SUITE 400
2405 GRAND BLVD.
KANSAS CITY, MO 64108

COPY MAILED

JUN 0 5 2008

OFFICE OF PETITIONS

In re Application of	:	
Michael E. Coughlin et al	:	
Application No. 11/067,455	:	ON PETITION
Filed: February 25, 2005	:	
Attorney Docket No. 35059-CNT	:	

This is a decision on the petition under 37 CFR 1.137(b), filed February 7, 2008, to revive the above-identified application.

The petition is **DISMISSED.**

Any request for reconsideration of this decision must be submitted within TWO (2) MONTHS from the mail date of this decision. Extensions of time under 37 CFR 1.136(a) are permitted. The reconsideration request should include a cover letter entitled "**Renewed Petition under 37 CFR 1.137(b)**." This is **not** final agency action within the meaning of 5 U.S.C. § 704.

A grantable petition under 37 CFR 1.137(b) must be accompanied by: (1) the required reply, unless previously filed; (2) the petition fee as set forth in 37 CFR 1.17(m); (3) a statement that the entire delay in filing the required reply from the due date for the reply until the filing of a grantable petition pursuant to 37 CFR 1.137(b) was unintentional; and (4) any terminal disclaimer (and fee as set forth in 37 CFR 1.20(d)) required by 37 CFR 1.137(c). Where there is a question as to whether either the abandonment or the delay in filing a petition under 37 CFR 1.137 was unintentional, the Commissioner may require additional information. See MPEP 711.03(c)(III)(C) and (D). The instant petition lack(s) item(s) (1).

A petition to revive cannot be granted where there is an outstanding requirement(s). The above-identified application became abandoned for failure to submit the Issue fee and Publication fee in a timely manner in reply to the Notice of Allowance mailed September 24, 2007, which set a statutory period for reply of three (3) months. Accordingly, the above-identified application became abandoned on December 25, 2007. Accordingly, the petition to revive cannot be granted until the $1440 Issue fee and $300 Publication fee is received.

The file does not indicate a change of address has been submitted, although the address given on the petition differs from the address of record. If appropriate, a change of address should be filed in accordance with MPEP 601.03. A courtesy copy of this decision is being mailed to the address

given on the petition; however, the Office will mail all future correspondence solely to the address of record.

Further correspondence with respect to this matter should be addressed as follows:

By mail: Mail Stop PETITION
Commissioner for Patents
Post Office Box 1450
Alexandria, VA 22313-1450

By hand: Customer Service Window
Randolph Building
401 Dulany Street
Alexandria, VA 22314

By facsimile: (571) 273-8300
ATTN: Office of Petitions

Telephone inquiries concerning this decision should be directed to the undersigned at (571) 272-3210.

Irvin Dingle
Petitions Examiner
Office of Petitions

cc: Matthew P. Harlow
Hovey Williams LLP
10801 Mastin Blvd., Suite 1000
Overland Park, Kansas 66210

UNITED STATES PATENT AND TRADEMARK OFFICE

Commissioner for Patents
United States Patent and Trademark Office
P.O. Box 1450
Alexandria, VA 22313-1450
www.uspto.gov

HOVEY WILLIAMS LLP
SUITE 400
2405 GRAND BLVD.
KANSAS CITY, MO 64108

COPY MAILED

OCT 2 7 2008

OFFICE OF PETITIONS

In re Application of :
Michael E. Coughlin et al :
Application No. 11/067,455 : ON PETITION
Filed: February 25, 2005 :
Attorney Docket No. 35059-CNT :

This is a decision on the renewed petition filed June 26, 2008 under 37 CFR 1.137(b), to revive the above-identified application.

The petition is **GRANTED.**

The file does not indicate a change of address has been submitted, although the address given on the petition differs from the address of record. If appropriate, a change of address should be filed in accordance with MPEP 601.03. A courtesy copy of this decision is being mailed to the address given on the petition; however, the Office will mail all future correspondence solely to the address of record.

Telephone inquiries concerning this decision should be directed to the undersigned at (571) 272-3210.

This matter is being referred to the Office of Data Management for further processing.

Irvin Dingle
Petitions Examiner
Office of Petitions

cc: Thomas B. Luebbering
10801 Mastin Blvd., Suite 1000
Overland Park, Kansas 66210

UNITED STATES PATENT AND TRADEMARK OFFICE

UNITED STATES DEPARTMENT OF COMMERCE
United States Patent and Trademark Office
Address: COMMISSIONER FOR PATENTS
P.O. Box 1450
Alexandria, Virginia 22313-1450
www.uspto.gov

SEED INTELLECTUAL PROPERTY LAW GROUP PLLC
701 FIFTH AVENUE, SUITE 5400
SEATTLE, WA 98104-7092

Mail Date: 04/21/2010

Applicant	: Alessandro Inglese	: DECISION ON REQUEST FOR
Patent Number	: 7593358	: RECALCULATION of PATENT
Issue Date	: 09/22/2009	: TERM ADJUSTMENT IN VIEW
Appliction No	: 11/067,461	: OF WYETH AND NOTICE OF INTENT TO
Filed	: 02/25/2005	: ISSUE CERTIFICATE OF CORRECTION
		:

The Request for Recalculation is **GRANTED** to the extent indicated.

The patent term adjustment has been determined to be **1158** days. The USPTO will *sua sponte* issue a certificate of correction reflecting the amount of PTA days determined by the recalculation.

Prior to the issuance of the certificate of correction, the USPTO will afford patentee an opportunity to be heard and request reconsideration. Accordingly, patentee has **one month or thirty (30) days**, whichever is longer, to file a request for reconsideration of this patent term adjustment calculation. See 35 U.S.C. 154(b)(3)(B)(ii) and 37 CFR 1.322(a)(4). No extensions of time will be granted under 37 CFR 1.136.

Patentee should use document code PET.OP if electronically filing a request for reconsideration of this patent term adjustment calculation. The patentee must also include the information required by 37 CFR 1.705(b)(2) and the fee required by 37 CFR 1.18(e). If patentee does not file a timely request for reconsideration of this patent term adjustment calculation including the information required by 37 CFR 1.705(b)(2) and the fee required by 37 CFR 1.18(e), the USPTO will issue a certificate of correction reflecting the PTA determination noted above.

Patentee should be aware that in order to preserve the right to review in the United States District Court for the District of Columbia of the USPTO patent term adjustment determination, patentee must ensure that he or she also take the steps required under 35 U.S.C. 154(b)(4)(A) in a timely manner. Nothing in the request for recalculation should be construed as providing an alternative time frame for commencing a civil action under 35 U.S.C. 154(b)(4)(A).

Any questions concerning this decision should be directed to the Office of Patent Legal Administration at 571-272-7702.

UNITED STATES PATENT AND TRADEMARK OFFICE

Commissioner for Patents
United States Patent and Trademark Office
P.O. Box 1450
Alexandria, VA 22313-1450
www.uspto.gov

KLAUS J. BACH & ASSOCIATES
PATENTS AND TRADEMARKS
4407 TWIN OAKS DRIVE
MURRYSVILLE, PA 15668

COPY MAILED
OCT 0 2 2006
OFFICE OF PETITIONS

In re Application of

Knoff, et al.

Application No. 11/067,465

Filed: February 25, 2005

Attorney Docket No. MB 461

DECISION ON PETITION

This is a decision on the petition under 37 CFR §1.137(b), August 2, 2006, to revive the above-identified application.

The petition is **granted**.

This application became abandoned for failure to timely file corrected drawings as required by the Notice of Allowability (the "Notice") mailed March 7, 2006. The Notice set forth a three (3) month statutory period for reply. No response was received within the allowable period. Accordingly, this application became abandoned on June 8, 2006. A Notice of Abandonment was mailed on July 26, 2006.

Corrected drawings were received on August 2, 2006.

The application is being forwarded to the Office of Patent Publications for further processing.

Telephone inquiries concerning this matter may be directed to the undersigned at (571) 272-3222.

Kenya A. McLaughlin
Petitions Attorney
Office of Petitions

UNITED STATES PATENT AND TRADEMARK OFFICE

Commissioner for Patents
United States Patent and Trademark Office
P.O. Box 1450
Alexandria, VA 22313-1450
www.uspto.gov

MCDERMOTT WILL & EMERY LLP
600 13TH STREET, N.W.
WASHINGTON, DC 20005-3096

COPY MAILED
MAR 17 2010

In re Application of :
Yashuhiko Nomura et al :
Application No. 11/067,472 : ON PETITION
Filed: February 28, 2005 :
Attorney Docket No. 071912-0017

This is a decision on the petition, filed March 16, 2010 under 37 CFR 1.313(c)(2) to withdraw the above-identified application from issue after payment of the issue fee.

The petition is **GRANTED**.

The above-identified application is withdrawn from issue for consideration of a submission under 37 CFR 1.114 (request for continued examination). See 37 CFR 1.313(c)(2).

Petitioner is advised that the issue fee paid on January 29, 2010 in the above-identified application cannot be refunded. If, however, the above-identified application is again allowed, petitioner may request that it be applied towards the issue fee required by the new Notice of Allowance.[1]

Telephone inquiries should be directed to Irvin Dingle at (571) 272-3210.

This matter is being referred to Technology Center AU 2828 for processing of the request for continued examination under 37 CFR 1.114 and for consideration of the concurrently filed Information Disclosure Statement.

/Irvin Dingle/
Irvin Dingle
Petitions Examiner
Office of Petitions

---

[1] The request to apply the issue fee to the new Notice may be satisfied by completing and returning the new Issue Fee Transmittal Form PTOL-85(b), which includes the following language thereon: Commissioner for Patents is requested to apply the Issue Fee and Publication Fee (if any) or re-apply any previously paid issue fee to the application identified above. Petitioner is advised that, whether a fee is indicated as being due or not, the Issue Fee Transmittal Form **must** be completed and timely submitted to avoid abandonment. Note the language in bold text on the first page of the Notice of Allowance and Fee(s) Due (PTOL-85).

SPE RESPONSE FOR CERTIFICATE OF CORRECTION

Paper No.: _____

DATE : 07/26/07

TO SPE OF : ART UNIT 1752

SUBJECT : Request for Certificate of Correction for Appl. No.: **11/067480** Patent No.: **7192693**

Please respond to this request for a certificate of correction within 7 days.

Please review the requested changes/corrections as shown in the **COCIN** document(s) in the IFW application image. No new matter should be introduced, nor should the scope or meaning of the claims be changed.

Please complete the response (see below) and forward the completed response to scanning using document code **COCX**.

Angela Green
Certificates of Correction Branch
703.308.9380 ext. 123

Thank You For Your Assistance

The request for issuing the above-identified correction(s) is hereby:
Note your decision on the appropriate box.

- ☑ **Approved** — **All** changes apply.
- ☐ **Approved in Part** — Specify below which changes **do not** apply.
- ☐ **Denied** — State the reasons for denial below.

Comments: _____

SPE _____ Art Unit 1752

UNITED STATES PATENT AND TRADEMARK OFFICE

COMMISSIONER FOR PATENTS
UNITED STATES PATENT AND TRADEMARK OFFICE
P.O. BOX 1450
ALEXANDRIA, VA 22313-1450
www.uspto.gov

MAILED

JUN 08 2009

OFFICE OF PETITIONS

PERKINS COIE LLP/MSFT
P. O. BOX 1247
SEATTLE WA 98111-1247

In re Application	:	
Cadiz, et al.	:	
Application No. 11/067,485	:	PATENT TERM ADJUSTMENT
Filed: February 25, 2005	:	
Dkt. No.: 418268162US	:	

This is a decision on the "APPLICATION FOR PATENT TERM ADJUSTMENT RECONSIDERATION UNDER 37 C.F.R. § 1.705(B)," filed January 20, 2009.

The application for patent term adjustment (PTA) under 37 CFR 1.705(b) is **HELD IN ABEYANCE**.

The Determination of Patent Term Adjustment under 35 U.S.C. 154(b) was mailed December 15, 2008. The instant application for PTA was timely filed January 20, 2009 along with the issue fee payment. Applicants argue that the application is entitled to an adjustment of 777 days, which would include an adjustment of 484 additional days under the provisions of 37 CFR 1.702(b).

The instant application for patent term adjustment requests reconsideration of the patent term adjustment as it relates to the Office's failure to issue the patent within three years of the filing date of the application. A decision is being **held in abeyance** until after the actual patent date. Knowledge of the actual date the patent issues is required to calculate the amount, if any, of additional patent term for Office failure to issue the patent within three years. *See*, 37 CFR 1.703(b).

Applicants are given **TWO (2) MONTHS** from the issue date of the patent to file a written request for reconsideration of the patent term adjustment for Office failure to issue the patent within three years. A copy of this decision should accompany the request. Applicants may seek such consideration without payment of an additional fee. However, as to all other bases for seeking reconsideration of the patent term adjustment indicated in the patent, all requirements of 37 CFR 1.705(d) must be met. Requests for reconsideration on other bases must be timely filed and must include payment of the required fee.

Applicants are reminded that if an application is entitled to an adjustment under 35 USC 154(b)(1)(B), the entire period during which the application was pending (except for periods excluded under 35 USC 154(b)(1)(B)(i)-(iii)), and not just the period beginning three years after the actual filing date of the application, is the period of delay under 35 USC 154(b)(1)(B) in determining whether periods of delay overlap under 35 USC 154(b)(2)(A).

Thus, any days of delay for Office issuance of the patent more than three years after the filing date of the application which overlap with the days of patent term adjustment accorded prior to the issuance of the patent will not result in any additional patent term adjustment. *See*, 35 USC 154(b)(1)(B), 35 USC 154(b)(2)(A), and 37 CFR § 1.703(f). *See, also, Revision of Patent Term Extension and Patent Term Adjustment Provisions; Final Rule*, 69 Fed. Reg. 21704 (April 22, 2004).

Receipt is hereby acknowledged of the required PTA application fee of $200.00.

Applicants are further advised that the patent term adjustment indicated in the patent will include any additional patent term accrued pursuant to §§ 1.702(a)(4) and 1.702(b).

This application is being forwarded to the Office of Data Management for processing into a patent.

Telephone inquiries specific to this matter should be directed to the undersigned at (571) 272-3205.

Alesia M. Brown
Petitions Attorney
Office of Petitions

UNITED STATES PATENT AND TRADEMARK OFFICE

COMMISSIONER FOR PATENTS
UNITED STATES PATENT AND TRADEMARK OFFICE
P.O. BOX 1450
ALEXANDRIA, VA 22313-1450
www.uspto.gov

Paper No.

PERKINS COIE LLP/MSFT
P. O. BOX 1247
SEATTLE WA 98111-1247

COPY MAILED

AUG 06 2009

OFFICE OF PETITIONS

In re Application of :
Shah et al. :
Application No. 11/067,487 :
Filed: February 25, 2005 :
Atty Docket No. 418268165US :
Title: METHOD AND SYSTEM FOR :
GENERATING AND MONITORING :
VARIABLE LOAD ON AN :
APPLICATION UNDER TEST :
:

ON APPLICATION FOR
PATENT TERM ADJUSTMENT

This is in response to the "APPLICATION FOR PATENT TERM ADJUSTMENT RECONSIDERATION UNDER 37 C.F.R. § 1.705(B)," filed January 20, 2009. Applicant submits that the correct patent term adjustment to be indicated on the patent is one thousand and seventy-one (1071) days, not six hundred and seventeen (617) days as calculated by the Office as of the mailing of the initial determination of patent term adjustment. Applicant requests this correction solely on the basis that the Office will take in excess of three years to issue this patent.[1]

As the instant application for patent term adjustment requests reconsideration of the patent term adjustment as it relates to the Office's failure to issue the patent within 3 years of the filing date, the application for patent term adjustment under 37 CFR 1.705(b) is **DISMISSED as PREMATURE**.

[1] It is noted in passing that on the second page of this petition, applicant claims that the Office failed to properly calculate the "A" delay. However, on this same page, applicant indicates that the correct period of "A" delay should be 708 days (the Office arrived at this same calculation). Since the applicant agrees with the Office's calculation of 708 days for the period of "A" delay, applicant's indication that "[t]he PTO failed to properly account for the delay under 35 U.S.C. § 154(b)(1)(A)" appears to be a typographical error, and the amount of Office delay is not in dispute.

Knowledge of the actual date the patent issues is required to calculate the amount, if any, of additional patent term patentee is entitled to for Office failure to issue the patent within 3 years. See § 1.702(b). (This is true even where a request for continued examination (RCE) was filed). The computer will not undertake the § 1.702(b) calculation until the actual date of issuance of the patent has been determined. Likewise, the computer will not calculate any further Office delay under § 1.702(a)(4) or applicant delay under § 1.704(c)(10) until the actual date of issuance of the patent has been determined. As such, the Office can not make a determination on the correctness of the patent term adjustment until the patent has issued.

Requesting reconsideration of the patent term adjustment to be indicated on the patent under 37 CFR 1.705(b) based on the initial determination of patent term adjustment and a projected issuance date of the patent (or even the filing date of the request for continued examination) is premature. Accordingly, it is appropriate to dismiss as premature such a request.

Rather than file an application for patent term adjustment under 37 CFR 1.705(b) contesting the 37 CFR 1.702(b) calculation at the time of the mailing of the notice of allowance, applicant is advised that they may wait until the time of the issuance of the patent and file a request for reconsideration of the patent term adjustment pursuant to 37 CFR 1.705(d). As the USPTO does not calculate the amount of time earned pursuant to 37 CFR 1.702(b) until the time of the issuance of the patent, the Office will consider any request for reconsideration of the patent term adjustment due to an error in the calculation of 37 CFR 1.702(b) to be timely if the request for reconsideration is filed within two months of the issuance of the patent. However, as to all other bases for contesting the initial determination of patent term adjustment received with the notice of allowance, applicant must timely file an application for patent term adjustment prior to the payment of the issue fee[2].

---

[2] For example, if applicant disputes both the calculation of patent term adjustment under 37 CFR 1.702(a)(1) for Office failure to mail a first Office action or notice of allowance not later than fourteen months after the date on which the application was filed and under 37 CFR 1.702(b) for Office failure to issue a patent within three years of the actual filing date of the application, then applicant must still timely file an application for patent term adjustment prior to the payment of the issue fee to contest the calculation of Office delay in issuing a first Office action or notice of allowance. See 37 CFR 1.705(b) and 35 U.S.C. 154(b)(3)(B). A dispute as to the calculation of the §1.702(a)(1) period raised on request for

The Office acknowledges submission of the $200.00 fee set forth in 37 CFR 1.18(e) for consideration of the application for patent term adjustment under 37 CFR 1.705(b).

Any request for reconsideration of the patent term adjustment indicated on the patent must be timely filed within 2 months after issuance pursuant to 37 CFR 1.705(d) and must include payment of the required fee under 37 CFR 1.18(e).

The Office of Data Management has been advised of this decision. This application is being referred to the Office of Data Management for issuance of the patent.

Telephone inquiries regarding this decision should be directed to Senior Attorney Paul Shanoski at (571) 272-3225.

Nancy Johnson
Senior Petitions Attorney
Office of Petitions

---

reconsideration of patent term adjustment under 37 CFR 1.705(d) will be dismissed as untimely filed.

UNITED STATES PATENT AND TRADEMARK OFFICE

UNITED STATES DEPARTMENT OF COMMERCE
United States Patent and Trademark Office
Address: COMMISSIONER FOR PATENTS
P.O. Box 1450
Alexandria, Virginia 22313-1450
www.uspto.gov

PERKINS COIE LLP/MSFT
P. O. BOX 1247
SEATTLE, WA 98111-1247

Mail Date: 04/20/2010

Applicant	: Achal K. Shah	: DECISION ON REQUEST FOR
Patent Number	: 7587638	: RECALCULATION of PATENT
Issue Date	: 09/08/2009	: TERM ADJUSTMENT IN VIEW
Appliction No	: 11/067,487	: OF WYETH AND NOTICE OF INTENT TO
Filed	: 02/25/2005	: ISSUE CERTIFICATE OF CORRECTION
		:

The Request for Recalculation is **GRANTED** to the extent indicated.

The patent term adjustment has been determined to be **1141** days. The USPTO will *sua sponte* issue a certificate of correction reflecting the amount of PTA days determined by the recalculation.

Prior to the issuance of the certificate of correction, the USPTO will afford patentee an opportunity to be heard and request reconsideration. Accordingly, patentee has **one month or thirty (30) days**, whichever is longer, to file a request for reconsideration of this patent term adjustment calculation. See 35 U.S.C. 154(b)(3)(B)(ii) and 37 CFR 1.322(a)(4). No extensions of time will be granted under 37 CFR 1.136.

Patentee should use document code PET.OP if electronically filing a request for reconsideration of this patent term adjustment calculation. The patentee must also include the information required by 37 CFR 1.705(b)(2) and the fee required by 37 CFR 1.18(e). If patentee does not file a timely request for reconsideration of this patent term adjustment calculation including the information required by 37 CFR 1.705(b)(2) and the fee required by 37 CFR 1.18(e), the USPTO will issue a certificate of correction reflecting the PTA determination noted above.

Patentee should be aware that in order to preserve the right to review in the United States District Court for the District of Columbia of the USPTO patent term adjustment determination, patentee must ensure that he or she also take the steps required under 35 U.S.C. 154(b)(4)(A) in a timely manner. Nothing in the request for recalculation should be construed as providing an alternative time frame for commencing a civil action under 35 U.S.C. 154(b)(4)(A).

Any questions concerning this decision should be directed to the Office of Patent Legal Administration at 571-272-7702.

UNITED STATES PATENT AND TRADEMARK OFFICE

Commissioner for Patents
United States Patent and Trademark Office
P.O. Box 1450
Alexandria, VA 22313-1450
www.uspto.gov

Morrison & Foerster, LLP
1650 Tysons Boulevard
Suite 400
Mclean, VA 22102

COPY MAILED

JUL 19 2007

OFFICE OF PETITIONS

In re Application of	:	
Andreas Spitzer et al.	:	
Application No. 11/067,496	:	DECISION ON PETITION
Filed: February 28, 2005	:	TO WITHDRAW
Attorney Docket No. 543822012600	:	FROM RECORD
	:	

This is a decision on the Request to Withdraw as attorney or agent of record under 37 C.F.R. § 1.36(b), filed April 13, 2007.

The request is **APPROVED**.

A grantable request to withdraw as attorney/agent of record must be signed by every attorney/agent seeking to withdraw or contain a clear indication that one attorney is signing on behalf of another/others. A request to withdraw will not be approved unless at least 30 (thirty) days would remain between the date of approval and the later of the expiration date of a time to file a response or the expiration date of the maximum time period which can be extended under 37 C.F.R. § 1.136(a).

The request was signed by Deborah S. Gladstein on behalf of all attorneys of record who are associated with customer No. 25227. All attorneys/agents associated with the Customer Number 25227 have been withdrawn.

Applicant is reminded that there is no attorney of record at this time.

The request to change the correspondence of record is not acceptable as the requested correspondence address is not that of (1) the first named signing inventor; or (2) an intervening assignee of the entire interest under 37 C.F.R. 3.71. Accordingly, all correspondence will be mailed to the first signing inventor. A courtesy copy of this decision will be mailed to the address noted on the request to withdraw. If the attorneys associated with this firm desire to receive future correspondence regarding this application, the proper power of attorney documents must be submitted.

A non-final rejection was mailed on June 4, 2007. Failure to timely reply will result in the abandonment of this application.

Telephone inquiries concerning this decision should be directed to Kimberly Inabinet at 571-272-4618.

Frances Hicks
Petitions Examiner
Office of Petitions

cc: Andreas Spitzer
Bozener Str. 6
Ottobrunn, Germany 85221

cc: Eschweiler & Associates
National City Bank Building
629 Euclid Avenue, Suite 1000
Cleveland, OH 44114

UNITED STATES PATENT AND TRADEMARK OFFICE

UNITED STATES DEPARTMENT OF COMMERCE
United States Patent and Trademark Office
Address: COMMISSIONER FOR PATENTS
P.O. Box 1450
Alexandria, Virginia 22313-1450
www.uspto.gov

APPLICATION NUMBER	FILING OR 371 (c) DATE	FIRST NAMED APPLICANT	ATTY. DOCKET NO./TITLE
11/067,496	02/28/2005	Andreas Spitzer	543822012600

CONFIRMATION NO. 5737

OC000000024894532

25227
MORRISON & FOERSTER LLP
1650 TYSONS BOULEVARD
SUITE 400
MCLEAN, VA 22102

Date Mailed: 07/19/2007

NOTICE REGARDING CHANGE OF POWER OF ATTORNEY

This is in response to the Power of Attorney filed 04/13/2007.

- The withdrawal as attorney in this application has been accepted. Future correspondence will be mailed to the new address of record. 37 CFR 1.33.

Kimberly Grabinet
Office of Initial Patent Examination (571) 272-4000, or 1-800-PTO-9199
FORMER ATTORNEY/AGENT COPY

UNITED STATES PATENT AND TRADEMARK OFFICE

COMMISSIONER FOR PATENTS
UNITED STATES PATENT AND TRADEMARK OFFICE
P.O. BOX 1450
ALEXANDRIA, VA 22313-1450
www.uspto.gov

GOODWIN PROCTER LLP
PATENT ADMINISTRATOR
EXCHANGE PLACE
BOSTON, MA 02109-2881

COPY MAILED

AUG 1 1 2005

OFFICE OF PETITIONS

In re Application of	:	
Steitz, et al.	:	
Filed: February 25, 2005	:	ON PETITION
Application No. 11/067,522	:	
Atty. Dkt. No.: RIB-005CPC	:	

This decision is in response to the "PETITION AND RESPONSE TO NOTICE TO FILE MISSING PARTS OF NONPROVISIONAL APPLICATION," filed June 16, 2005. This petition is being treated as a petition under 37 CFR 1.182 to accord the above-identified application a filing date of February 25, 2005 and for acknowledgment of the presence of Figures 6B-6I upon submission of the application.

The petition is **GRANTED**.

The above-identified application was filed February 25, 2005. The Notice to File Missing Parts of Nonprovisional Application ("Notice") mailed April 18, 2005 indicated, *inter alia*, that the application had been accorded a filing date, but that Figures 6B-6I appeared to have been omitted from the application as filed.

The Notice permits applicant to either: (1) establish prior receipt in the PTO of page 1 of the specification; (2) submit the omitted page of specification and accept the date of such submission as the application filing date. An assertion that the missing page of specification was in fact deposited in the PTO with the application papers must made by way of petition (and the appropriate petition fee) with evidence of such deposit. An applicant desiring to submit the omitted item in a nonprovisional application and accept the date of such submission as the application filing date must file any omitted item with an oath or declaration in compliance with 37 CFR 1.63 and 1.64 referring to such item and a petition under 37 CFR 1.182 (with the petition fee under 37 CFR 1.17(h)) requesting the later filing date within two months of the date of the Notice (37 CFR 1.181(f)); or (3) take no action thereby constructively accepting the application filed as in the USPTO without the omitted item. Failure to take any action requires

amendment of the specification to cancel reference to the omitted item.

Petitioners contend that Figures 6B-6I were submitted with the application, but that the figures were not thusly labeled. Petitioners thus argue that no drawings were actually omitted from the application as filed.

Since it is obvious from the petition that no figures were actually missing on February 25, 2005, the application will be processed using the drawings filed on February 25, 2005.

However, the Notice was correct in advising applicants that Figures 6B-6I appeared to have been omitted. Therefore, the Notice was properly mailed and will not be withdrawn and the petition fee will not be refunded since the petition was not necessary to correct any PTO error.

The preliminary amendment submitted herewith to re-label the drawing figures will be examined in due course.

The application is being returned to Initial Patent Examination Division for further processing with a filing date of February 25, 2005, using the drawing sheets filed on that date.

Telephone inquiries related to this decision may be directed to the undersigned at (571) 272-3205.

Alesia M. Brown
Petitions Attorney
Office of Petitions

UNITED STATES PATENT AND TRADEMARK OFFICE

Commissioner for Patents
United States Patent and Trademark Office
P.O. Box 1450
Alexandria, VA 22313-1450
www.uspto.gov

TECHNOLOGY & INTELLECTUAL PROPERTY
STRATEGIES CROUP PC dba TIPS GROUP
P. O. BOX 1639
LOS ALTOS, CA 94023-1639

COPY MAILED

MAY 16 2007

OFFICE OF PETITIONS

In re Application of	:
Marco Amiotti	:
Application No. 11/067,526	: DECISION GRANTING PETITION
Filed: February 25, 2005	: UNDER 37 CFR 1.313(c)(2)
Attorney Docket No. SAESP054.US02	:

This is a decision on the petition, filed May 14, 2007, under 37 CFR 1.313(c)(2) to withdraw the above-identified application from issue after payment of the issue fee.

The petition is **GRANTED**.

The above-identified application is withdrawn from issue for consideration of a submission under 37 CFR 1.114 (request for continued examination). See 37 CFR 1.313(c)(2).

Petitioner is advised that the issue fee paid on February 22, 2007 in the above-identified application cannot be refunded. If, however, the above-identified application is again allowed, petitioner may request that it be applied towards the issue fee required by the new Notice of Allowance.[1]

Telephone inquiries should be directed to the undersigned at (571) 272-3218.

This matter is being referred to Technology Center AU 2822 for processing of the request for continued examination under 37 CFR 1.114 and for consideration of the Information Disclosure Statement stated to have been filed of even date.

Frances Hicks
Petitions Examiner
Office of Petitions

C:\Documents and Settings\fhicks\My Documents\470\May10\067526.wpd

---

[1] *The request to apply the issue fee to the new Notice may be satisfied by completing and returning the new Part B – Fee(s) Transmittal Form (along with any balance due at the time of submission). Petitioner is advised that the Issue Fee Transmittal Form **must** be completed and timely submitted to avoid abandonment.*

UNITED STATES PATENT AND TRADEMARK OFFICE

Commissioner for Patents
United States Patent and Trademark Office
P.O. Box 1450
Alexandria, VA 22313-1450
www.uspto.gov

TIPS GROUP
c/o Intellevate LLC
P. O. BOX 52050
Minneapolis MN 52050

COPY MAILED

NOV 06 2008

OFFICE OF PETITIONS

In re Application of	:	
Marco Amiotti	:	
Application No. 11/067,526	:	DECISION GRANTING PETITION
Filed: February 25, 2005	:	UNDER 37 CFR 1.313(c)(2)
Attorney Docket No. SAESP054.US02	:	

This is a decision on the petition under 37 CFR 1.313(c)(2), filed October 31, 2008, to withdraw the above-identified application from issue after payment of the issue fee.

The petition is **GRANTED**.

The above-identified application is withdrawn from issue for consideration of a submission under 37 CFR 1.114 (request for continued examination). *See* 37 CFR 1.313(c)(2).

Petitioner is advised that the issue fee paid on September 29, 2008 cannot be refunded. If, however, this application is again allowed, petitioner may request that it be applied towards the issue fee required by the new Notice of Allowance.[1]

Telephone inquiries should be directed to Terri Williams at (571) 272-2991.

This application is being referred to Technology Center AU 2822 for processing of the request for continued examination under 37 CFR 1.114 and for consideration of the concurrently filed information disclosure statement.

Terri Williams

Terri Williams
Petitions Examiner
Office of Petitions

---

[1] *The request to apply the issue fee to the new Notice may be satisfied by completing and returning the new Part B – Fee(s) Transmittal Form (along with any balance due at the time of submission). Petitioner is advised that the Issue Fee Transmittal Form must be completed and timely submitted to avoid abandonment of the application.*

UNITED STATES PATENT AND TRADEMARK OFFICE

Commissioner for Patents
United States Patent and Trademark Office
P.O. Box 1450
Alexandria, VA 22313-1450
www.uspto.gov

LUMEN INTELLECTUAL PROPERTY SERVICES, INC.
2345 YALE STREET, 2ND FLOOR
PALO ALTO CA 94306

COPY MAILED

SEP 29 2006

OFFICE OF PETITIONS

ON PETITION

In re Application of	:	
Rappoport et al.	:	
Application No. 11/067,533	:	
Filed: February 25, 2005	:	
Attorney Docket No. PMR-105/DIV	:	

This is a decision on the petition under 37 CFR 1.102(c)(1), filed February 25, 2005, to make the above-identified application special based on applicant's age as set forth in M.P.E.P. § 708.02, Section IV.

The petition is **GRANTED**.

A grantable petition to make an application special under 37 CFR 1.102(c)(1) and MPEP § 708.02, Section IV: Applicant's Age must be accompanied by evidence showing that at least one of the applicants is 65 years of age, or more, such as a birth certificate or a statement by applicant. No fee is required.

The instant petition includes a Declaration from the applicant, Leonid Rappoport. Accordingly, the above-identified application has been accorded "special" status.

Telephone inquiries concerning this decision should be directed to the undersigned at 571-272-3206. All other inquiries concerning either the examination or status of the application should be directed to the Technology Center.

This matter is being referred to the Technology Center Art Unit 1712 for action on the merits commensurate with this decision.

Liana Chase
Petitions Examiner
Office of Petitions

UNITED STATES PATENT AND TRADEMARK OFFICE

Commissioner for Patents
United States Patent and Trademark Office
P.O. Box 1450
Alexandria, VA 22313-1450
www.uspto.gov

DORSEY & WHITNEY, LLP
INTELLECTUAL PROPERTY DEPARTMENT
370 SEVENTEENTH STREET
SUITE 4700
DENVER CO 80202-5647

COPY MAILED

JAN 17 2007

OFFICE OF PETITIONS

In re Application of	:
Crawford et al.	:
Application No. 11/067,538	: DECISION GRANTING PETITION
Filed: February 25, 2005	: UNDER 37 CFR 1.78(a)(3) AND
Attorney Docket No. 34006/US/2	: UNDER 37 CFR 1.78(a)(6)

This is a decision on the petitions under 37 CFR §§ 1.78(a)(3) and 1.78(a)(6), filed August 25, 2006, to accept an unintentionally delayed claim under 35 U.S.C. §§120 and 119(e) for the benefit of the prior-filed applications set forth in the concurrently filed amendment.

The petition is **DISMISSED**.

A petition for acceptance of a claim for late priority under 37 CFR §§ 1.78(a)(3) and 1.78(a)(6) is only applicable to those applications filed on or after November 29, 2000. Further, the petition is appropriate only after the expiration of the period specified in 37 CFR §§ 1.78(a)(2)(ii) and 1.78(a)(5)(ii). In addition, the petition under 37 CFR §§ 1.78(a)(3) and 1.78(a)(6) must be accompanied by:

(1) the reference required by 35 U.S.C. §§ 120 and 119(e) and 37 CFR §§ 1.78(a)(2)(i) and 1.78(a)(5)(i) of the prior-filed application, unless previously submitted;
(2) the surcharge set forth in § 1.17(t); and
(3) a statement that the entire delay between the date the claim was due under 37 CFR §§ 1.78(a)(2)(ii) and 1.78(a)(5)(ii) and the date the claim was filed was unintentional. The Commissioner may require additional where there is a question whether the delay was unintentional.

The instant petition does not comply with item (1) above.

A reference to add the above-noted, prior-filed applications on page one following the first sentence of the specification has been included in a concurrently filed amendment. However, the amendment is not acceptable as drafted since it improperly incorporates by reference the prior-filed applications. Petitioner's attention is directed to Dart Industries v. Banner, 636 F.2d 684, 207 USPQ 273 (C.A.D.C. 1980), where the court drew a distinction between a permissible 35 U.S.C. § 120 statement and the impermissible introduction of new matter by way of incorporation by reference in a 35 U.S.C. § 120 statement. The court specifically stated:

> Section 120 merely provides a mechanism whereby an application becomes entitled to benefit of the filing date of an earlier application disclosing the same subject matter. Common subject matter must be disclosed, in both applications, either specifically or by an express incorporation-by-reference of prior disclosed subject matter. Nothing in section 120 itself operates to carry forward any disclosure from an earlier application. In re deSeversky, supra at 674, 177 USPQ at 146-147. Section 120 contains no magical disclosure-augmenting powers able to pierce new matter barriers. It cannot, therefore, "limit" the absolute and express prohibition against new matter contained in section 251.

In order for the incorporation by reference statement to be effective as a proper safeguard against the omission of a portion of a prior application, the incorporation by reference statement must be included in the specification-as-filed, or in an amendment specifically referred to in an oath or declaration executing the application. *See* In re deSeversky, *supra*. *Note also* MPEP 201.06(c).

Accordingly, before the petition under 37 CFR 1.78(a)(3) and 1.78(a)(6) can be granted, a substitute amendment[1] deleting the incorporation by reference statement, along with a renewed petition under 37 CFR 1.78(a)(3) and 1.78(a)(6), is required.

Further correspondence with respect to this matter should be addressed as follows:

By mail:	Mail Stop PETITIONS Commissioner for Patents Post Office Box 1450 Alexandria, VA 22313-1450
By hand:	Customer Window located at: U.S. Patent and Trademark Office Customer Service Window Randolph Building 401 Dulany Street Alexandria, VA 22314
By fax:	(571) 273-8300 ATTN: Office of Petitions

Any questions concerning this matter may be directed to the undersigned at (571) 272-3206.

Liana Walsh

Liana Walsh
Petitions Examiner
Office of Petitions

---

[1] *Note* 37 CFR 1.121

UNITED STATES PATENT AND TRADEMARK OFFICE

Commissioner for Patents
United States Patent and Trademark Office
P.O. Box 1450
Alexandria, VA 22313-1450
www.uspto.gov

DORSEY & WHITNEY, LLP
INTELLECTUAL PROPERTY DEPARTMENT
370 SEVENTEENTH STREET
SUITE 4700
DENVER CO 80202-5647

COPY MAILED

JUN 2 4 2008

OFFICE OF PETITIONS

In re Application of	:
Crawford et al.	:
Application No. 11/067,538	: DECISION GRANTING PETITION
Filed: February 25, 2005	: UNDER 37 CFR 1.78(a)(3) AND
Attorney Docket No. 34006/US/2	: UNDER 37 CFR 1.78(a)(6)

This is a decision on the renewed petitions under 37 CFR §§ 1.78(a)(3) and 1.78(a)(6), filed June 3, 2008, to accept an unintentionally delayed claim under 35 U.S.C. §§120 and 119(e) for the benefit of the prior-filed applications set forth in the concurrently filed amendment.

The petitions are **GRANTED**.

A petition for acceptance of a claim for late priority under 37 CFR §§ 1.78(a)(3) and 1.78(a)(6) is only applicable to those applications filed on or after November 29, 2000. Further, the petition is appropriate only after the expiration of the period specified in 37 CFR §§ 1.78(a)(2)(ii) and 1.78(a)(5)(ii). In addition, the petition under 37 CFR §§ 1.78(a)(3) and 1.78(a)(6) must be accompanied by:

(1) the reference required by 35 U.S.C. §§ 120 and 119(e) and 37 CFR §§ 1.78(a)(2)(i) and 1.78(a)(5)(i) of the prior-filed application, unless previously submitted;
(2) the surcharge set forth in § 1.17(t); and
(3) a statement that the entire delay between the date the claim was due under 37 CFR §§ 1.78(a)(2)(ii) and 1.78(a)(5)(ii) and the date the claim was filed was unintentional. The Commissioner may require additional where there is a question whether the delay was unintentional.

The instant application was filed on February 25, 2005 and was pending at the time of filing of the instant petition. A reference to the prior-filed applications has been included in an amendment to the first sentence of the specification following the title, as required by 37 CFR §§ 1.78(a)(2)(iii) and 1.78(a)(5)(iii).

The instant nonprovisional application was filed after November 29, 2000, and the claim for priority herein is submitted after expiration of the period specified in 37 CFR §§ 1.78(a)(2)(ii) and 1.78(a)(5)(ii). *See* 35 U.S.C. § 120 and § 119(e). Accordingly, having found that the instant petition satisfies the conditions of 37 CFR §§ 1.78(a)(3) and 1.78(a)(6) for acceptance of an unintentionally delayed claim for priority under 35 U.S.C. § 120 and § 119(e), the petition to accept an unintentionally delayed claim of benefit to the prior-filed applications is granted.

The granting of the petition to accept the delayed benefit claim to the prior-filed applications under 37 CFR §§ 1.78(a)(3) and 1.78(a)(6) should not be construed as meaning that the instant application is entitled to the benefit of the filing date of the prior-filed applications. In order for the instant application to be entitled to the benefit of the prior-filed applications, all other requirements under 35

U.S.C. §120 and 1.78(a)(1) and (a)(2) and under 35 U.S.C. §119(e) and 37 CFR 1.78(a)(4) and (a)(5) must be met. Similarly, the fact that the corrected Filing Receipt accompanying this decision on petition includes the prior-filed applications should not be construed as meaning that applicant is entitled to the claim for benefit of priority to the prior-filed applications noted thereon. Accordingly, the examiner will, in due course, consider this benefit claim and determine whether the instant application is entitled to the benefit of the earlier filing date.

A corrected Filing Receipt, which includes the priority claim to the prior-filed applications, accompanies this decision on petition.

Any questions concerning this matter may be directed to the undersigned at (571) 272-3206.

This matter is being referred to Technology Center Art Unit 3764 for appropriate action on the amendment submitted June 3, 2008, including consideration by the examiner of the claim under 35 U.S.C. § 120 and 37 CFR 1.78(a)(2) for the benefit of the prior-filed applications, and for consideration of the claim under 35 U.S.C. §119(e) and 37 CFR 1.78(a)(5) for the benefit of the prior-filed provisional applications.

Liana Walsh
Petitions Examiner
Office of Petitions

ATTACHMENT: Corrected Filing Receipt

UNITED STATES PATENT AND TRADEMARK OFFICE

UNITED STATES DEPARTMENT OF COMMERCE
United States Patent and Trademark Office
Address: COMMISSIONER FOR PATENTS
P.O. Box 1450
Alexandria, Virginia 22313-1450
www.uspto.gov

APPLICATION NUMBER	FILING or 371(c) DATE	GRP ART UNIT	FIL FEE REC'D	ATTY.DOCKET.NO	TOT CLAIMS	IND CLAIMS
11/067,538	02/25/2005	3764	1380	34006/US/2	15	3

CONFIRMATION NO. 5420

CORRECTED FILING RECEIPT

OC000000030629677

20686
DORSEY & WHITNEY, LLP
INTELLECTUAL PROPERTY DEPARTMENT
370 SEVENTEENTH STREET
SUITE 4700
DENVER, CO 80202-5647

Date Mailed: 06/23/2008

Receipt is acknowledged of this non-provisional patent application. The application will be taken up for examination in due course. Applicant will be notified as to the results of the examination. Any correspondence concerning the application must include the following identification information: the U.S. APPLICATION NUMBER, FILING DATE, NAME OF APPLICANT, and TITLE OF INVENTION. Fees transmitted by check or draft are subject to collection. Please verify the accuracy of the data presented on this receipt. **If an error is noted on this Filing Receipt, please submit a written request for a Filing Receipt Correction. Please provide a copy of this Filing Receipt with the changes noted thereon. If you received a "Notice to File Missing Parts" for this application, please submit any corrections to this Filing Receipt with your reply to the Notice. When the USPTO processes the reply to the Notice, the USPTO will generate another Filing Receipt incorporating the requested corrections**

Applicant(s)

Douglas A. Crawford, Lafayette, CO;
Andrew P. Lull, Boulder, CO;
John Danile, Longmont, CO;

Assignment For Published Patent Application

Nautilus, Inc., Vancouver, WA

Power of Attorney: The patent practitioners associated with Customer Number 20686

Domestic Priority data as claimed by applicant

This appln claims benefit of 60/548,786 02/26/2004
and claims benefit of 60/548,265 02/26/2004
and claims benefit of 60/548,787 02/26/2004
and claims benefit of 60/548,811 02/26/2004
and is a CIP of 10/789,579 02/26/2004
which claims benefit of 60/450,890 02/28/2003
and claims benefit of 60/450,789 02/28/2003
and claims benefit of 60/451,104 02/28/2003
This application 11/067,538
is a CIP of 10/789,182 02/26/2004
which claims benefit of 60/450,789 02/28/2003
and claims benefit of 60/451,104 02/28/2003
and claims benefit of 60/450,890 02/28/2003
This application 11/067,538
is a CIP of 10/789,294 02/26/2004
which claims benefit of 60/451,104 02/28/2003
and claims benefit of 60/450,789 02/28/2003

and claims benefit of 60/450,890 02/28/2003

Foreign Applications

If Required, Foreign Filing License Granted: 03/22/2005

The country code and number of your priority application, to be used for filing abroad under the Paris Convention, is **US 11/067,538**

Projected Publication Date: Not Applicable

Non-Publication Request: No

Early Publication Request: No

Title

Control system and method for an exercise apparatus

Preliminary Class

482

PROTECTING YOUR INVENTION OUTSIDE THE UNITED STATES

Since the rights granted by a U.S. patent extend only throughout the territory of the United States and have no effect in a foreign country, an inventor who wishes patent protection in another country must apply for a patent in a specific country or in regional patent offices. Applicants may wish to consider the filing of an international application under the Patent Cooperation Treaty (PCT). An international (PCT) application generally has the same effect as a regular national patent application in each PCT-member country. The PCT process **simplifies** the filing of patent applications on the same invention in member countries, but **does not result** in a grant of "an international patent" and does not eliminate the need of applicants to file additional documents and fees in countries where patent protection is desired.

Almost every country has its own patent law, and a person desiring a patent in a particular country must make an application for patent in that country in accordance with its particular laws. Since the laws of many countries differ in various respects from the patent law of the United States, applicants are advised to seek guidance from specific foreign countries to ensure that patent rights are not lost prematurely.

Applicants also are advised that in the case of inventions made in the United States, the Director of the USPTO must issue a license before applicants can apply for a patent in a foreign country. The filing of a U.S. patent application serves as a request for a foreign filing license. The application's filing receipt contains further information and guidance as to the status of applicant's license for foreign filing.

Applicants may wish to consult the USPTO booklet, "General Information Concerning Patents" (specifically, the section entitled "Treaties and Foreign Patents") for more information on timeframes and deadlines for filing foreign patent applications. The guide is available either by contacting the USPTO Contact Center at 800-786-9199, or it can be viewed on the USPTO website at http://www.uspto.gov/web/offices/pac/doc/general/index.html.

For information on preventing theft of your intellectual property (patents, trademarks and copyrights), you may wish to consult the U.S. Government website, http://www.stopfakes.gov. Part of a Department of Commerce initiative, this website includes self-help "toolkits" giving innovators guidance on how to protect intellectual property in specific

countries such as China, Korea and Mexico. For questions regarding patent enforcement issues, applicants may call the U.S. Government hotline at 1-866-999-HALT (1-866-999-4158).

LICENSE FOR FOREIGN FILING UNDER

Title 35, United States Code, Section 184

Title 37, Code of Federal Regulations, 5.11 & 5.15

GRANTED

The applicant has been granted a license under 35 U.S.C. 184, if the phrase "IF REQUIRED, FOREIGN FILING LICENSE GRANTED" followed by a date appears on this form. Such licenses are issued in all applications where the conditions for issuance of a license have been met, regardless of whether or not a license may be required as set forth in 37 CFR 5.15. The scope and limitations of this license are set forth in 37 CFR 5.15(a) unless an earlier license has been issued under 37 CFR 5.15(b). The license is subject to revocation upon written notification. The date indicated is the effective date of the license, unless an earlier license of similar scope has been granted under 37 CFR 5.13 or 5.14.

This license is to be retained by the licensee and may be used at any time on or after the effective date thereof unless it is revoked. This license is automatically transferred to any related applications(s) filed under 37 CFR 1.53(d). This license is not retroactive.

The grant of a license does not in any way lessen the responsibility of a licensee for the security of the subject matter as imposed by any Government contract or the provisions of existing laws relating to espionage and the national security or the export of technical data. Licensees should apprise themselves of current regulations especially with respect to certain countries, of other agencies, particularly the Office of Defense Trade Controls, Department of State (with respect to Arms, Munitions and Implements of War (22 CFR 121-128)); the Bureau of Industry and Security, Department of Commerce (15 CFR parts 730-774); the Office of Foreign AssetsControl, Department of Treasury (31 CFR Parts 500+) and the Department of Energy.

NOT GRANTED

No license under 35 U.S.C. 184 has been granted at this time, if the phrase "IF REQUIRED, FOREIGN FILING LICENSE GRANTED" DOES NOT appear on this form. Applicant may still petition for a license under 37 CFR 5.12, if a license is desired before the expiration of 6 months from the filing date of the application. If 6 months has lapsed from the filing date of this application and the licensee has not received any indication of a secrecy order under 35 U.S.C. 181, the licensee may foreign file the application pursuant to 37 CFR 5.15(b).

UNITED STATES PATENT AND TRADEMARK OFFICE

COMMISSIONER FOR PATENTS
UNITED STATES PATENT AND TRADEMARK OFFICE
P.O. BOX 1450
ALEXANDRIA, VA 22313-1450
www.uspto.gov

Greenberg Traurig LLP
Met Life Building
200 Park Avenue
14th Floor
New York, NY 10166

MAILED

FEB 15 2006

TECHNOLOGY CENTER 2100

In re Application of: Barth, et al.	)	
Application No. 11/067,547	)	
Filed: February 25, 2005	)	**DECISION ON PETITION TO MAKE**
For: METHOD AND APPARATUS FOR	)	**SPECIAL UNDER M.P.E.P.§708.02(II):**
DYNAMIC INFORMATION	)	**INFRINGEMENT**
CONNECTION ENGINE	)	

This is a decision on the petition, filed December 29, 2005, under 37 C.F.R. 1.102(d) and M.P.E.P. §708.02(II): Infringement, to make the above-identified application special.

A grantable petition under 37 C.F.R. 1.102(d), and M.P.E.P. §708.02, Section II, must be accompanied by payment of the fee under 37 C.F.R. 1.17(h) and a statement under 37 C.F.R. 1.102 by the applicant or assignee or statements by an attorney/agent registered to practice before the Patent and Trademark Office that: (A) there is an infringing device or product actually on the market or method in use; (B) a rigid comparison of the alleged infringing device, product, or method with the claims of the application has been made, and that, in his or her opinion, some of the claims are unquestionably infringed; and (C) he or she has made or caused to be made a careful and thorough search of the prior art or has a good knowledge of the pertinent prior art. Applicant must provide one copy of each of the references deemed most closely related to the subject matter encompassed by the claims.

The petition and declaration filed December 29, 2005 include all of the requirements set forth above and, therefore, the petition is **GRANTED**.

The application is being forwarded to the examiner to be advanced out of turn for examination in accordance with the procedures set forth in M.P.E.P. §708.02 and 37 C.F.R. 1.102.

Brian L. Johnson
Special Programs Examiner
Technology Center 2100
Computer Architecture, Software, and Information Security
(571) 272-3595

UNITED STATES PATENT AND TRADEMARK OFFICE

Commissioner for Patents
United States Patent and Trademark Office
P.O. Box 1450
Alexandria, VA 22313-1450
www.uspto.gov

MORRISON & FOERSTER LLP
425 MARKET STREET
SAN FRANCISCO, CA 94105-2482

In re Application of	:	
Dominique F. Bridon et al.	:	
Application No. 11/067,556	:	DECISION ON PETITION
Filed: February 25, 2005	:	TO WITHDRAW
Attorney Docket No. 11767-023-999	:	FROM RECORD
	:	

This is a decision on the Request to Withdraw as attorney or agent of record under 37 C.F.R. § 1.36(b), filed November 3, 2006.

The request is **NOT APPROVED** as moot.

A review of the file record indicates that the power of attorney to the attorneys/agents associated with Morrison and Foerster LLP has been revoked by the assignee of the patent application on November 21, 2006. Accordingly, the request to withdraw under 37 C.F.R. § 1.36(b) is moot.

All future communications from the Office will continue to be directed to the below-listed address until otherwise notified by applicant.

Telephone inquires concerning this decision should be directed to Terri Williams at 571-272-2991.

Terri Williams

Terri Williams
Petitions Examiner
Office of Petitions

cc: **JONES DAY**
222 EAST 41ST ST
NEW YORK NY 10017

UNITED STATES PATENT AND TRADEMARK OFFICE

Commissioner for Patents
United States Patent and Trademark Office
P.O. Box 1450
Alexandria, VA 22313-1450
www.uspto.gov

MAILED

APR 22 2010

OFFICE OF PETITIONS

LANDO & ANASTASI, LLP
ONE MAIN STREET, SUITE 1100
CAMBRIDGE MA 02142

In re Patent No. 7,601,691	:	DECISION ON REQUEST FOR
BRIDON et al.	:	RECONSIDERATION OF
Issue Date: October 13, 2009	:	PATENT TERM ADJUSTMENT
Application No. 11/067,556	:	AND
Filed: February 25, 2005	:	NOTICE OF INTENT TO ISSUE
Attorney Docket No. C2077-701130	:	CERTIFICATE OF CORRECTION

This is a decision on the petition filed on December 14, 2009, which is being treated as a petition under 37 CFR 1.705(d) requesting that the patent term adjustment indicated on the above-identified patent be corrected to indicate that the term of the above-identified patent is extended or adjusted by five hundred one (501) days.

The petition to correct the patent term adjustment indicated on the above-identified patent to indicate that the term of the above-identified patent is extended or adjusted by five hundred one (501) days is **GRANTED**.

The Office acknowledges submission of the $200.00 fee set forth in 37 CFR 1.18(e). No additional fees are required.

The application is being forwarded to the Certificates of Correction Branch for issuance of a certificate of correction. The Office will issue a certificate of correction indicating that the term of the above-identified patent is extended or adjusted by **five hundred one (501) days**.

Telephone inquiries specific to this matter should be directed to the undersigned at (571) 272-3211.

Christina Tartera Donnell

Christina Tartera Donnell
Senior Petitions Attorney
Office of Petitions

Enclosure: Copy of DRAFT Certificate of Correction

UNITED STATES PATENT AND TRADEMARK OFFICE

CERTIFICATE OF CORRECTION

PATENT : 7,601,691 B2

DATED : Oct. 13, 2009 **DRAFT**

INVENTOR(S) : BRIDON et al.

It is certified that error appears in the above-identified patent and that said Letters Patent is hereby corrected as shown below:

On the cover page,

[*] Notice: Subject to any disclaimer, the term of this patent is extended or adjusted under 35 USC 154(b) by 321 days

Delete the phrase "by 321 days" and insert – by 501 days--

Day : Wednesday

PALM INTRANET

Date: 4/21/2010
Time: 07:43:32

PTA Calculations for Application: 11/067556			
Application Filing Date:	02/25/2005	PTO Delay (PTO):	469
Issue Date of Patent:	10/13/2009	Three Years:	0
Pre-Issue Petitions:	0	Applicant Delay (APPL):	148
Post-Issue Petitions:	0	Total PTA (days):	501
PTO Delay Adjustment:	180		

File Contents History

Number	Date	Contents Description	PTO	APPL	START
105	04/21/2010	ADJUSTMENT OF PTA CALCULATION BY PTO	180		
99.5	09/23/2009	PTA 36 MONTHS	288		
99	10/13/2009	PATENT ISSUE DATE USED IN PTA CALCULATION			
98	09/07/2009	EXPORT TO FINAL DATA CAPTURE			
97	09/04/2009	DISPATCH TO FDC			
96	09/03/2009	APPLICATION IS CONSIDERED READY FOR ISSUE			
95	08/31/2009	ISSUE FEE PAYMENT VERIFIED			
94	08/31/2009	ISSUE FEE PAYMENT RECEIVED			
93	08/31/2009	SEQUENCE FORWARDED TO PUBS ON TAPE			
92	08/21/2009	EXPORT TO INITIAL DATA CAPTURE			
89	08/20/2009	MAIL NOTICE OF ALLOWANCE			
88	08/17/2009	ISSUE REVISION COMPLETED			
87	08/17/2009	DOCUMENT VERIFICATION			
86	08/17/2009	NOTICE OF ALLOWANCE DATA VERIFICATION COMPLETED			
85	08/17/2009	NOTICE OF ALLOWABILITY			
84	06/08/2009	INFORMATION DISCLOSURE STATEMENT CONSIDERED			
83	07/02/2009	FINISHED INITIAL DATA CAPTURE			
82	06/08/2009	INFORMATION DISCLOSURE STATEMENT (IDS) FILED			
81	06/11/2009	DATE FORWARDED TO EXAMINER			
80	06/08/2009	REQUEST FOR CONTINUED EXAMINATION (RCE)			
79	06/11/2009	DISPOSAL FOR A RCE / CPA / R129			
		INFORMATION DISCLOSURE STATEMENT (IDS)			

78	06/08/2009	FILED			
77	06/08/2009	WORKFLOW - REQUEST FOR RCE - BEGIN			
76	03/20/2009	SEQUENCE FORWARDED TO PUBS ON TAPE			
75	03/09/2009	EXPORT TO INITIAL DATA CAPTURE			
74	03/10/2009	ELECTRONIC REVIEW			
73	03/10/2009	EMAIL NOTIFICATION			
72	03/10/2009	MAIL NOTICE OF ALLOWANCE			
71	03/04/2009	ISSUE REVISION COMPLETED			
70	03/04/2009	DOCUMENT VERIFICATION			
69	03/04/2009	NOTICE OF ALLOWANCE DATA VERIFICATION COMPLETED			
68	03/02/2009	NOTICE OF ALLOWABILITY			
67	01/13/2009	DATE FORWARDED TO EXAMINER			
66	12/05/2008	RESPONSE AFTER NON-FINAL ACTION			
65	06/30/2008	MISCELLANEOUS INCOMING LETTER			
63	09/08/2008	ELECTRONIC REVIEW			
62	09/08/2008	EMAIL NOTIFICATION			
61	09/08/2008	MAIL NON-FINAL REJECTION			
60	09/02/2008	NON-FINAL REJECTION			
59	07/08/2008	MISCELLANEOUS INCOMING LETTER			
58	07/15/2008	REQUEST FOR REFUND			
57	06/18/2008	DATE FORWARDED TO EXAMINER			
56	05/16/2008	RESPONSE AFTER NON-FINAL ACTION		90	51
55	05/16/2008	REQUEST FOR EXTENSION OF TIME - GRANTED			
54	01/04/2008	EMAIL NOTIFICATION			
53	01/04/2008	CHANGE IN POWER OF ATTORNEY (MAY INCLUDE ASSOCIATE POA)			
52	12/28/2007	CORRESPONDENCE ADDRESS CHANGE			
51	11/16/2007	MAIL NON-FINAL REJECTION			
50	11/13/2007	NON-FINAL REJECTION			
49	10/23/2007	CHANGE IN POWER OF ATTORNEY (MAY INCLUDE ASSOCIATE POA)			
48	10/23/2007	CHANGE IN POWER OF ATTORNEY (MAY INCLUDE ASSOCIATE POA)			
47	10/23/2007	CHANGE IN POWER OF ATTORNEY (MAY INCLUDE ASSOCIATE POA)			
46	08/10/2007	INFORMATION DISCLOSURE STATEMENT CONSIDERED			

45	10/19/2007	CORRESPONDENCE ADDRESS CHANGE			
44	09/12/2007	CRF IS GOOD TECHNICALLY / ENTERED INTO DATABASE			
43	08/10/2007	REFERENCE CAPTURE ON IDS			
42	08/10/2007	INFORMATION DISCLOSURE STATEMENT (IDS) FILED		0	39
40	08/20/2007	DATE FORWARDED TO EXAMINER			
39	08/10/2007	RESPONSE AFTER NON-FINAL ACTION		58	35
38	08/10/2007	REQUEST FOR EXTENSION OF TIME - GRANTED			
37	08/10/2007	INFORMATION DISCLOSURE STATEMENT (IDS) FILED			
36	04/26/2007	MAIL-PETITION DECISION - DISMISSED			
35	03/13/2007	MAIL NON-FINAL REJECTION			
34	03/05/2007	NON-FINAL REJECTION			
33	11/29/2005	INFORMATION DISCLOSURE STATEMENT CONSIDERED			
32	10/11/2005	INFORMATION DISCLOSURE STATEMENT CONSIDERED			
31	04/27/2005	INFORMATION DISCLOSURE STATEMENT CONSIDERED			
30	12/06/2006	DATE FORWARDED TO EXAMINER			
29	11/21/2006	RESPONSE TO ELECTION / RESTRICTION FILED			
28	12/06/2006	CORRESPONDENCE ADDRESS CHANGE			
27	12/06/2006	CHANGE IN POWER OF ATTORNEY (MAY INCLUDE ASSOCIATE POA)			
26	11/03/2006	PETITION ENTERED			
25	10/23/2006	MAIL RESTRICTION REQUIREMENT	181		-1
24	10/16/2006	REQUIREMENT FOR RESTRICTION / ELECTION			
23	10/12/2006	CASE DOCKETED TO EXAMINER IN GAU			
22.7	11/29/2005	INFORMATION DISCLOSURE STATEMENT (IDS) FILED			
22	11/29/2005	INFORMATION DISCLOSURE STATEMENT (IDS) FILED			
21.7	10/11/2005	INFORMATION DISCLOSURE STATEMENT (IDS) FILED			
21	10/11/2005	INFORMATION DISCLOSURE STATEMENT (IDS) FILED			
20	07/21/2005	IFW TSS PROCESSING BY TECH CENTER COMPLETE			
19	07/21/2005	CASE DOCKETED TO EXAMINER IN GAU			

18	06/21/2005	CRF IS GOOD TECHNICALLY / ENTERED INTO DATABASE			
17	06/10/2005	PRELIMINARY AMENDMENT			
16	04/27/2005	REFERENCE CAPTURE ON IDS			
15.7	04/27/2005	INFORMATION DISCLOSURE STATEMENT (IDS) FILED			
15	04/27/2005	INFORMATION DISCLOSURE STATEMENT (IDS) FILED			
14	05/03/2005	APPLICATION RETURN FROM OIPE			
13	05/04/2005	APPLICATION IS NOW COMPLETE			
12	05/03/2005	APPLICATION RETURN TO OIPE			
11	05/03/2005	APPLICATION DISPATCHED FROM OIPE			
10	05/03/2005	APPLICATION IS NOW COMPLETE			
9	04/08/2005	ADDITIONAL APPLICATION FILING FEES			
8	04/08/2005	A STATEMENT BY ONE OR MORE INVENTORS SATISFYING THE REQUIREMENT UNDER 35 USC 115, OATH OF THE APPLIC			
7	03/23/2005	NOTICE MAILED--APPLICATION INCOMPLETE--FILING DATE ASSIGNED			
5	03/17/2005	CLEARED BY OIPE CSR			
4	03/14/2005	CRF IS GOOD TECHNICALLY / ENTERED INTO DATABASE			
3	03/12/2005	IFW SCAN & PACR AUTO SECURITY REVIEW			
2	02/25/2005	CRF DISK HAS BEEN RECEIVED BY PREEXAM / GROUP / PCT			
1	02/25/2005	INITIAL EXAM TEAM NN			

Search Another: Application# Search

EXPLANATION OF PTA CALCULATION

EXPLANATION OF PTE CALCULATION

To go back, right click here and select Back. To go forward, right click here and select Forward. To refresh, right click here and select Refresh.

Back to OASIS | Home page

UNITED STATES PATENT AND TRADEMARK OFFICE

Commissioner for Patents
United States Patent and Trademark Office
P.O. Box 1450
Alexandria, VA 22313-1450
www.uspto.gov

COPY MAILED

MAY 25 2007

OFFICE OF PETITIONS

STAINBROOK & STAINBROOK, LLP
412 AVIATION BOULEVARD
SUITE H
SANTA ROSA, CA 95403

In re Application of :
Bruce S. Lloyd :
Application No. 11/067,566 : ON PETITION
Filed: February 25, 2005 :
Attorney Docket No. 00810.P1US

This is a decision on the petition under 37 CFR 1.137(a), filed April 16, 2007, to revive the above-identified application.

The petition is **GRANTED.**

The above-identified application became abandoned for failure to reply to the non-final Office action mailed June 19, 2006, which set a shortened statutory period for reply of three (3) months from its mailing date. No response was believed to have been received within the allowable period, and the application became abandoned on September 20, 2006. A Notice of Abandonment was mailed on February 27, 2007.

Petitioner has established a response to the non-final Office action was received by facsimile at the USPTO on September 19, 2006.

The file is now being forwarded to Technology Center 1700, GAU 1724 for further processing including entry of the amendment filed with the instant petition on April 16, 2007.

Telephone inquiries concerning this decision may be directed to the undersigned at (571) 272-3222.

Kenya A. McLaughlin
Petitions Attorney
Office of Petitions

UNITED STATES PATENT AND TRADEMARK OFFICE

Commissioner for Patents
United States Patent and Trademark Office
P.O. Box 1450
Alexandria, VA 22313-1450
www.uspto.gov

WHEELOCK CHAN LLP
2880 ZANKER ROAD
SUITE 109
SAN JOSE CA 95134

COPY MAILED

JUL 07 2008

OFFICE OF PETITIONS

In re Application of :
Xiaodong ZHANG et al. :
Application No. 11/067,571 : DECISION ON PETITION
Filed: February 25, 2005 :
Attorney Docket No. :

This is a decision on the petition under the unintentional provisions of 37 CFR 1.137(b), filed May 27, 2008, to revive the above-identified application.

The petition is **GRANTED**.

The application became abandoned for failure to timely pay the issue fee on or before April 22, 2008, as required by the Notice of Allowance and Fee(s) Due, mailed January 22, 2008, which set a statutory period for reply of three (3) months. Accordingly, the application became abandoned on April 23, 2008.

The petition satisfies the requirements of 37 CFR 1.137(b) in that petitioner has supplied (1) the reply in the form of payment of the issue fee of $1440.00, (2) the petition fee of $1540.00; and (3) a proper statement of unintentional delay. Accordingly, the issue fee payment is accepted as being unintentionally delayed.

Telephone inquiries concerning this decision should be directed to Michelle R. Eason at (571) 272-4231.

This application is being referred to Office of Data Management.

Michelle R. Eason
Paralegal Specialist
Office of Petitions

UNITED STATES PATENT AND TRADEMARK OFFICE

Commissioner for Patents
United States Patent and Trademark Office
P.O. Box 1450
Alexandria, VA 22313-1450
www.uspto.gov

TOWNSEND AND TOWNSEND AND CREW, LLP
TWO EMBARCADERO CENTER
EIGHTH FLOOR
SAN FRANCISCO CA 94111-3834

COPY MAILED

APR 1 5 2009

OFFICE OF PETITIONS

In re Application of
KREANG-AREKUL, Somchai et al.
Application No. 11/067,594
Filed: February 25, 2005
Attorney Docket No. **021106-001810US**

DECISION ON PETITION
TO WITHDRAW
FROM RECORD

This is a decision on the Request to Withdraw as attorney or agent of record under 37 C.F.R. § 1.36(b), filed March 11, 2009.

The request is **APPROVED**.

A grantable request to withdraw as attorney/agent of record must be signed by every attorney/agent seeking to withdraw or contain a clear indication that one attorney is signing on behalf of another/others. The Office requires the practitioner(s) requesting withdrawal to certify that he, she, or they have: (1) given reasonable notice to the client, prior to the expiration of the response period, that the practitioner(s) intends to withdraw from employment; (2) delivered to the client or a duly authorized representative of the client all papers and property (including funds) to which the client is entitled; and (3) notified the client of any responses that may be due and the time frame within which the client must respond, pursuant 37 CFR 10.40(c).

The request was signed by George B. F. Yee on behalf of all attorneys of record who are associated with customer No. 20350. All attorneys/agents associated with the Customer Number 20350 have been withdrawn. Applicant is reminded that there is no attorney of record at this time.

The request to change the correspondence address of record is not acceptable as the requested correspondence address is not that of: (1) the first named signing inventor; or (2) an intervening assignee of the entire interest under 37 C.F.R 3.71. All future communications from the Office will be directed to the first named signing inventor or the assignee of the entire interest at the first copied address below until otherwise properly notified by the applicant.

Telephone inquiries concerning this decision should be directed to Tredelle Jackson at 571-272-2783.

Tredelle D. Jackson
Paralegal Specialist
Office of Petitions

cc: **SOMCHAI KREANG-AREKUL**
142 ELM STREET #107
SAN MATEO CA 94401

cc: **MICHAEL BEST & FRIEDRICH LLP**
100 E WISCONSIN AVENUE
SUITE 3300
MILWAUKEE, WI 53202

UNITED STATES PATENT AND TRADEMARK OFFICE

UNITED STATES DEPARTMENT OF COMMERCE
United States Patent and Trademark Office
Address: COMMISSIONER FOR PATENTS
P.O. Box 1450
Alexandria, Virginia 22313-1450
www.uspto.gov

MICHAEL BEST & FRIEDRICH LLP
100 E WISCONSIN AVENUE
Suite 3300
MILWAUKEE, WI 53202

Mail Date: 04/21/2010

Applicant	: Somchai Kreang-Arekul	: DECISION ON REQUEST FOR
Patent Number	: 7650044	: RECALCULATION of PATENT
Issue Date	: 01/19/2010	: TERM ADJUSTMENT IN VIEW
Appliction No	: 11/067,594	: OF WYETH AND NOTICE OF INTENT TO
Filed	: 02/25/2005	: ISSUE CERTIFICATE OF CORRECTION
		:

The Request for Recalculation is **GRANTED** to the extent indicated.

The patent term adjustment has been determined to be **1286** days. The USPTO will *sua sponte* issue a certificate of correction reflecting the amount of PTA days determined by the recalculation.

Prior to the issuance of the certificate of correction, the USPTO will afford patentee an opportunity to be heard and request reconsideration. Accordingly, patentee has **one month or thirty (30) days**, whichever is longer, to file a request for reconsideration of this patent term adjustment calculation. See 35 U.S.C. 154(b)(3)(B)(ii) and 37 CFR 1.322(a)(4). No extensions of time will be granted under 37 CFR 1.136.

Patentee should use document code PET.OP if electronically filing a request for reconsideration of this patent term adjustment calculation. The patentee must also include the information required by 37 CFR 1.705(b)(2) and the fee required by 37 CFR 1.18(e). If patentee does not file a timely request for reconsideration of this patent term adjustment calculation including the information required by 37 CFR 1.705(b)(2) and the fee required by 37 CFR 1.18(e), the USPTO will issue a certificate of correction reflecting the PTA determination noted above.

Patentee should be aware that in order to preserve the right to review in the United States District Court for the District of Columbia of the USPTO patent term adjustment determination, patentee must ensure that he or she also take the steps required under 35 U.S.C. 154(b)(4)(A) in a timely manner. Nothing in the request for recalculation should be construed as providing an alternative time frame for commencing a civil action under 35 U.S.C. 154(b)(4)(A).

Any questions concerning this decision should be directed to the Office of Patent Legal Administration at 571-272-7702.

UNITED STATES PATENT AND TRADEMARK OFFICE

UNITED STATES DEPARTMENT OF COMMERCE
United States Patent and Trademark Office
Address: COMMISSIONER FOR PATENTS
P.O. Box 1450
Alexandria, Virginia 22313-1450
www.uspto.gov

MICHAEL BEST & FRIEDRICH LLP
100 E WISCONSIN AVENUE
Suite 3300
MILWAUKEE, WI 53202

Mail Date: 05/18/2010

Applicant : Somchai Kreang-Arekul
Patent Number : 7650044
Issue Date : 01/19/2010
Application No : 11/067,594
Filed : 02/25/2005

: NOTICE CONCERNING IMPROPER
: CALCULATION OF PATENT TERM
: ADJUSTMENT BASED UPON USPTO
: IMPROPERLY MEASURING REDUCTION
: PERIOD UNDER 37 CFR 1.704(c)(10).

The United States Patent and Trademark Office (USPTO) discovered that in processing the recent recalculation decisions mailed in response to patentee's filed Request for Recalculation of Patent Term Adjustment in view of Wyeth, the USPTO improperly measured the reduction period for reductions under 37 CFR 1.704(c)(10). Pursuant to 37 CFR 1.704(c)(10), patentee's reduction begins on the date of filing the amendment under 37 CFR 1.312 ("1.312 amendment") or other related paper and ends on the date that the Office mails a response to the filing of the 1.312 amendment or other paper. It has been discovered that during the recalculation, the calculation failed to the limit the reduction to the mail date of the response to the 1.312 amendment or other paper. Accordingly, patentee's reductions were greater than warranted.

This notice **VACATES** the previous GRANTED request for recalculation and provides patentee with a revised GRANTED recalculation.

The patent term adjustment has been determined to be **1321** days. The USPTO will *sua sponte* issue a certificate of correction reflecting the amount of patent term adjustment (PTA) days determined by the recalculation.

Prior to the issuance of the certificate of correction, the USPTO will afford patentee an opportunity to be heard and request reconsideration. Accordingly, patentee has **one month or thirty (30) days** from the mail date of this notice, whichever is longer, to file a request for reconsideration of this PTA calculation. See 35 U.S.C. § 154(b)(3)(B)(ii) and 37 CFR 1.322(a)(4).

Patentee should use document code PET.OP if electronically filing a request for reconsideration of this PTA calculation. The patentee must also include the information required by 37 CFR 1.705(b)(2), and the fee required by 37 CFR 1.18(e). If patentee does not file a timely request for reconsideration of this PTA calculation, including the information required by 37 CFR 1.705(b)(2) and the fee required by 37 CFR 1.18(e), the USPTO will issue a certificate of correction reflecting the PTA determination noted above.

Patentee should be aware that in order to preserve the right of review of the USPTO's PTA determination in the United States District Court for the District of Columbia, patentee must ensure that the steps required under 35 U.S.C. § 154 (b)(4) are taken in a timely manner. Nothing in the request for recalculation should be construed as providing an alternative time frame for commencing a civil action under 35 U.S.C. § 154(b)(4).

UNITED STATES PATENT AND TRADEMARK OFFICE

UNITED STATES DEPARTMENT OF COMMERCE
United States Patent and Trademark Office
Address: COMMISSIONER FOR PATENTS
P.O. Box 1450
Alexandria, Virginia 22313-1450
www.uspto.gov

PERKINS COIE LLP/MSFT
P. O. BOX 1247
SEATTLE, WA 98111-1247

Mail Date: 04/20/2010

Applicant	: Achal K. Shah	: DECISION ON REQUEST FOR
Patent Number	: 7587449	: RECALCULATION of PATENT
Issue Date	: 09/08/2009	: TERM ADJUSTMENT IN VIEW
Appliction No	: 11/067,595	: OF WYETH AND NOTICE OF INTENT TO
Filed	: 02/25/2005	: ISSUE CERTIFICATE OF CORRECTION
		:

The Request for Recalculation is **GRANTED** to the extent indicated.

The patent term adjustment has been determined to be **1232** days. The USPTO will *sua sponte* issue a certificate of correction reflecting the amount of PTA days determined by the recalculation.

Prior to the issuance of the certificate of correction, the USPTO will afford patentee an opportunity to be heard and request reconsideration. Accordingly, patentee has **one month or thirty (30) days**, whichever is longer, to file a request for reconsideration of this patent term adjustment calculation. See 35 U.S.C. 154(b)(3)(B)(ii) and 37 CFR 1.322(a)(4). No extensions of time will be granted under 37 CFR 1.136.

Patentee should use document code PET.OP if electronically filing a request for reconsideration of this patent term adjustment calculation. The patentee must also include the information required by 37 CFR 1.705(b)(2) and the fee required by 37 CFR 1.18(e). If patentee does not file a timely request for reconsideration of this patent term adjustment calculation including the information required by 37 CFR 1.705(b)(2) and the fee required by 37 CFR 1.18(e), the USPTO will issue a certificate of correction reflecting the PTA determination noted above.

Patentee should be aware that in order to preserve the right to review in the United States District Court for the District of Columbia of the USPTO patent term adjustment determination, patentee must ensure that he or she also take the steps required under 35 U.S.C. 154(b)(4)(A) in a timely manner. Nothing in the request for recalculation should be construed as providing an alternative time frame for commencing a civil action under 35 U.S.C. 154(b)(4)(A).

Any questions concerning this decision should be directed to the Office of Patent Legal Administration at 571-272-7702.

UNITED STATES PATENT AND TRADEMARK OFFICE

UNITED STATES DEPARTMENT OF COMMERCE
United States Patent and Trademark Office
Address: COMMISSIONER FOR PATENTS
P.O. Box 1450
Alexandria, Virginia 22313-1450
www.uspto.gov

PERKINS COIE LLP/MSFT
P. O. BOX 1247
SEATTLE, WA 98111-1247

Mail Date: 04/20/2010

Applicant	: Diane Baek	: DECISION ON REQUEST FOR
Patent Number	: 7664870	: RECALCULATION of PATENT
Issue Date	: 02/16/2010	: TERM ADJUSTMENT IN VIEW
Appliction No	: 11/067,596	: OF WYETH AND NOTICE OF INTENT TO
Filed	: 02/25/2005	: ISSUE CERTIFICATE OF CORRECTION
		:

The Request for Recalculation is **GRANTED** to the extent indicated.

The patent term adjustment has been determined to be **976** days. The USPTO will *sua sponte* issue a certificate of correction reflecting the amount of PTA days determined by the recalculation.

Prior to the issuance of the certificate of correction, the USPTO will afford patentee an opportunity to be heard and request reconsideration. Accordingly, patentee has **one month or thirty (30) days**, whichever is longer, to file a request for reconsideration of this patent term adjustment calculation. See 35 U.S.C. 154(b)(3)(B)(ii) and 37 CFR 1.322(a)(4). No extensions of time will be granted under 37 CFR 1.136.

Patentee should use document code PET.OP if electronically filing a request for reconsideration of this patent term adjustment calculation. The patentee must also include the information required by 37 CFR 1.705(b)(2) and the fee required by 37 CFR 1.18(e). If patentee does not file a timely request for reconsideration of this patent term adjustment calculation including the information required by 37 CFR 1.705(b)(2) and the fee required by 37 CFR 1.18(e), the USPTO will issue a certificate of correction reflecting the PTA determination noted above.

Patentee should be aware that in order to preserve the right to review in the United States District Court for the District of Columbia of the USPTO patent term adjustment determination, patentee must ensure that he or she also take the steps required under 35 U.S.C. 154(b)(4)(A) in a timely manner. Nothing in the request for recalculation should be construed as providing an alternative time frame for commencing a civil action under 35 U.S.C. 154(b)(4)(A).

Any questions concerning this decision should be directed to the Office of Patent Legal Administration at 571-272-7702.

UNITED STATES PATENT AND TRADEMARK OFFICE

UNITED STATES DEPARTMENT OF COMMERCE
United States Patent and Trademark Office
Address: COMMISSIONER FOR PATENTS
P.O. Box 1450
Alexandria, Virginia 22313-1450
www.uspto.gov

PERKINS COIE LLP/MSFT
P. O. BOX 1247
SEATTLE, WA 98111-1247

Mail Date: 05/17/2010

Applicant : Diane Baek
Patent Number : 7664870
Issue Date : 02/16/2010
Application No : 11/067,596
Filed : 02/25/2005

: NOTICE CONCERNING IMPROPER
: CALCULATION OF PATENT TERM
: ADJUSTMENT BASED UPON USPTO
: IMPROPERLY MEASURING REDUCTION
: PERIOD UNDER 37 CFR 1.704(c)(10).

The United States Patent and Trademark Office (USPTO) discovered that in processing the recent recalculation decisions mailed in response to patentee's filed Request for Recalculation of Patent Term Adjustment in view of Wyeth, the USPTO improperly measured the reduction period for reductions under 37 CFR 1.704(c)(10). Pursuant to 37 CFR 1.704(c)(10), patentee's reduction begins on the date of filing the amendment under 37 CFR 1.312 ("1.312 amendment") or other related paper and ends on the date that the Office mails a response to the filing of the 1.312 amendment or other paper. It has been discovered that during the recalculation, the calculation failed to the limit the reduction to the mail date of the response to the 1.312 amendment or other paper. Accordingly, patentee's reductions were greater than warranted.

This notice **VACATES** the previous GRANTED request for recalculation and provides patentee with a revised GRANTED recalculation.

The patent term adjustment has been determined to be **1008** days. The USPTO will *sua sponte* issue a certificate of correction reflecting the amount of patent term adjustment (PTA) days determined by the recalculation.

Prior to the issuance of the certificate of correction, the USPTO will afford patentee an opportunity to be heard and request reconsideration. Accordingly, patentee has **one month or thirty (30) days** from the mail date of this notice, whichever is longer, to file a request for reconsideration of this PTA calculation. See 35 U.S.C. § 154(b)(3)(B)(ii) and 37 CFR 1.322(a)(4).

Patentee should use document code PET.OP if electronically filing a request for reconsideration of this PTA calculation. The patentee must also include the information required by 37 CFR 1.705(b)(2), and the fee required by 37 CFR 1.18(e). If patentee does not file a timely request for reconsideration of this PTA calculation, including the information required by 37 CFR 1.705(b)(2) and the fee required by 37 CFR 1.18(e), the USPTO will issue a certificate of correction reflecting the PTA determination noted above.

Patentee should be aware that in order to preserve the right of review of the USPTO's PTA determination in the United States District Court for the District of Columbia, patentee must ensure that the steps required under 35 U.S.C. § 154 (b)(4) are taken in a timely manner. Nothing in the request for recalculation should be construed as providing an alternative time frame for commencing a civil action under 35 U.S.C. § 154(b)(4).

UNITED STATES PATENT AND TRADEMARK OFFICE

UNITED STATES DEPARTMENT OF COMMERCE
United States Patent and Trademark Office
Address: COMMISSIONER FOR PATENTS
P.O. Box 1450
Alexandria, Virginia 22313-1450
www.uspto.gov

PERKINS COIE LLP/MSFT
P. O. BOX 1247
SEATTLE, WA 98111-1247

Mail Date: 04/20/2010

Applicant	: Jonathan J. Cadiz	: DECISION ON REQUEST FOR
Patent Number	: 7616750	: RECALCULATION of PATENT
Issue Date	: 11/10/2009	: TERM ADJUSTMENT IN VIEW
Appliction No	: 11/067,611	: OF WYETH AND NOTICE OF INTENT TO
Filed	: 02/25/2005	: ISSUE CERTIFICATE OF CORRECTION
		:

The Request for Recalculation is **GRANTED** to the extent indicated.

The patent term adjustment has been determined to be **1184** days. The USPTO will *sua sponte* issue a certificate of correction reflecting the amount of PTA days determined by the recalculation.

Prior to the issuance of the certificate of correction, the USPTO will afford patentee an opportunity to be heard and request reconsideration. Accordingly, patentee has **one month or thirty (30) days**, whichever is longer, to file a request for reconsideration of this patent term adjustment calculation. See 35 U.S.C. 154(b)(3)(B)(ii) and 37 CFR 1.322(a)(4). No extensions of time will be granted under 37 CFR 1.136.

Patentee should use document code PET.OP if electronically filing a request for reconsideration of this patent term adjustment calculation. The patentee must also include the information required by 37 CFR 1.705(b)(2) and the fee required by 37 CFR 1.18(e). If patentee does not file a timely request for reconsideration of this patent term adjustment calculation including the information required by 37 CFR 1.705(b)(2) and the fee required by 37 CFR 1.18(e), the USPTO will issue a certificate of correction reflecting the PTA determination noted above.

Patentee should be aware that in order to preserve the right to review in the United States District Court for the District of Columbia of the USPTO patent term adjustment determination, patentee must ensure that he or she also take the steps required under 35 U.S.C. 154(b)(4)(A) in a timely manner. Nothing in the request for recalculation should be construed as providing an alternative time frame for commencing a civil action under 35 U.S.C. 154(b)(4)(A).

Any questions concerning this decision should be directed to the Office of Patent Legal Administration at 571-272-7702.

UNITED STATES PATENT AND TRADEMARK OFFICE

UNITED STATES DEPARTMENT OF COMMERCE
United States Patent and Trademark Office
Address: COMMISSIONER FOR PATENTS
P.O. Box 1450
Alexandria, Virginia 22313-1450
www.uspto.gov

PERKINS COIE LLP/MSFT
P. O. BOX 1247
SEATTLE, WA 98111-1247

Mail Date: 04/20/2010

Applicant	: Jonathan J. Cadiz	: DECISION ON REQUEST FOR
Patent Number	: 7593925	: RECALCULATION of PATENT
Issue Date	: 09/22/2009	: TERM ADJUSTMENT IN VIEW
Appliction No	: 11/067,615	: OF WYETH AND NOTICE OF INTENT TO
Filed	: 02/25/2005	: ISSUE CERTIFICATE OF CORRECTION
		:

The Request for Recalculation is **GRANTED** to the extent indicated.

The patent term adjustment has been determined to be **316** days. The USPTO will *sua sponte* issue a certificate of correction reflecting the amount of PTA days determined by the recalculation.

Prior to the issuance of the certificate of correction, the USPTO will afford patentee an opportunity to be heard and request reconsideration. Accordingly, patentee has **one month or thirty (30) days**, whichever is longer, to file a request for reconsideration of this patent term adjustment calculation. See 35 U.S.C. 154(b)(3)(B)(ii) and 37 CFR 1.322(a)(4). No extensions of time will be granted under 37 CFR 1.136.

Patentee should use document code PET.OP if electronically filing a request for reconsideration of this patent term adjustment calculation. The patentee must also include the information required by 37 CFR 1.705(b)(2) and the fee required by 37 CFR 1.18(e). If patentee does not file a timely request for reconsideration of this patent term adjustment calculation including the information required by 37 CFR 1.705(b)(2) and the fee required by 37 CFR 1.18(e), the USPTO will issue a certificate of correction reflecting the PTA determination noted above.

Patentee should be aware that in order to preserve the right to review in the United States District Court for the District of Columbia of the USPTO patent term adjustment determination, patentee must ensure that he or she also take the steps required under 35 U.S.C. 154(b)(4)(A) in a timely manner. Nothing in the request for recalculation should be construed as providing an alternative time frame for commencing a civil action under 35 U.S.C. 154(b)(4)(A).

Any questions concerning this decision should be directed to the Office of Patent Legal Administration at 571-272-7702.

UNITED STATES PATENT AND TRADEMARK OFFICE

UNITED STATES DEPARTMENT OF COMMERCE
United States Patent and Trademark Office
Address: COMMISSIONER FOR PATENTS
P.O. Box 1450
Alexandria, Virginia 22313-1450
www.uspto.gov

PERKINS COIE LLP/MSFT
P. O. BOX 1247
SEATTLE, WA 98111-1247

Mail Date: 05/17/2010

Applicant : Jonathan J. Cadiz
Patent Number : 7593925
Issue Date : 09/22/2009
Application No : 11/067,615
Filed : 02/25/2005

: NOTICE CONCERNING IMPROPER
: CALCULATION OF PATENT TERM
: ADJUSTMENT BASED UPON USPTO
: IMPROPERLY MEASURING REDUCTION
: PERIOD UNDER 37 CFR 1.704(c)(10).

The United States Patent and Trademark Office (USPTO) discovered that in processing the recent recalculation decisions mailed in response to patentee's filed Request for Recalculation of Patent Term Adjustment in view of Wyeth, the USPTO improperly measured the reduction period for reductions under 37 CFR 1.704(c)(10). Pursuant to 37 CFR 1.704(c)(10), patentee's reduction begins on the date of filing the amendment under 37 CFR 1.312 ("1.312 amendment") or other related paper and ends on the date that the Office mails a response to the filing of the 1.312 amendment or other paper. It has been discovered that during the recalculation, the calculation failed to the limit the reduction to the mail date of the response to the 1.312 amendment or other paper. Accordingly, patentee's reductions were greater than warranted.

This notice **VACATES** the previous GRANTED request for recalculation and provides patentee with a revised GRANTED recalculation.

The patent term adjustment has been determined to be **364** days. The USPTO will *sua sponte* issue a certificate of correction reflecting the amount of patent term adjustment (PTA) days determined by the recalculation.

Prior to the issuance of the certificate of correction, the USPTO will afford patentee an opportunity to be heard and request reconsideration. Accordingly, patentee has **one month or thirty (30) days** from the mail date of this notice, whichever is longer, to file a request for reconsideration of this PTA calculation. See 35 U.S.C. § 154(b)(3)(B)(ii) and 37 CFR 1.322(a)(4).

Patentee should use document code PET.OP if electronically filing a request for reconsideration of this PTA calculation. The patentee must also include the information required by 37 CFR 1.705(b)(2), and the fee required by 37 CFR 1.18(e). If patentee does not file a timely request for reconsideration of this PTA calculation, including the information required by 37 CFR 1.705(b)(2) and the fee required by 37 CFR 1.18(e), the USPTO will issue a certificate of correction reflecting the PTA determination noted above.

Patentee should be aware that in order to preserve the right of review of the USPTO's PTA determination in the United States District Court for the District of Columbia, patentee must ensure that the steps required under 35 U.S.C. § 154 (b)(4) are taken in a timely manner. Nothing in the request for recalculation should be construed as providing an alternative time frame for commencing a civil action under 35 U.S.C. § 154(b)(4).

UNITED STATES PATENT AND TRADEMARK OFFICE

Commissioner for Patents
United States Patent and Trademark Office
P.O. Box 1450
Alexandria, VA 22313-1450
www.uspto.gov

COPY MAILED
JUL 17 2006
OFFICE OF PETITIONS

KENYON & KENYON LLP
1500 K STREET N.W.
SUITE 700
WASHINGTON DC 20005

In re Application of	:	
Takashi Matsutani et al	:	
Application No. 11/067,655	:	ON PETITION
Filed: February 28, 2005	:	
Attorney Docket No. 10517-247	:	

This is a decision on the petition, filed July 7, 2006, under 37 CFR 1.313(c)(2) to withdraw the above-identified application from issue after payment of the issue fee.

The petition is **GRANTED.**

The above-identified application is withdrawn from issue for consideration of a submission under 37 CFR 1.114 (request for continued examination). See 37 CFR 1.313(c)(2).

Petitioner is advised that the issue fee paid on June 14, 2006, in the above-identified application cannot be refunded. If, however, the above-identified application is again allowed, petitioner may request that it be applied towards the issue fee required by the new Notice of Allowance.[1]

Telephone inquiries should be directed to the undersigned at (571) 272-3208.

The examiner of Technology Center AU 3747 will consider the request for continued examination under 37 CFR 1.114.

Karen Creasy
Petitions Examiner
Office of Petitions

---

[1] The request to apply the issue fee to the new Notice may be satisfied by completing and returning the new Issue Fee Transmittal Form PTOL-85(b), which includes the following language thereon: "Commissioner for Patents is requested to apply the Issue Fee and Publication Fee (if any) or re-apply any previously paid issue fee to the application identified above." Petitioner is advised that, whether a fee is indicated as being due or not, the Issue Fee Transmittal Form **must** be completed and timely submitted to avoid abandonment. Note the language in bold text on the first page of the Notice of Allowance and Fee(s) Due (PTOL-85).

UNITED STATES PATENT AND TRADEMARK OFFICE

COMMISSIONER FOR PATENTS
UNITED STATES PATENT AND TRADEMARK OFFICE
P.O. BOX 1450
ALEXANDRIA, VA 22313-1450
www.uspto.gov

Paper No. _____

Date : July 17, 2006

TO : Director, Office of Patent Publication

FROM : Office of the Deputy Commissioner
for Patent Examination Policy

SUBJECT : Withdrawal from Issue of

Applicant(s) :Takashi Matsutani et al
Application No. :11/067,655
Filed :February 28, 2005

The above-identified application has been assigned Patent No. 7,082,907 and an issue date of August 1, 2006.

It is hereby directed that this application be withdrawn from issue at the request of the applicant.

Do not refund the issue fee.

The following erratum should be published in the Official Gazette if the above-identified application is published in the OG of August 1, 2006:

"All reference to Patent No. 7,082,907 to Takashi Matsutani et al of Japan for COOLING STRUCTURE OF CYLINDER BLOCK appearing in the Official Gazette of August 1, 2006 should be deleted since no patent was granted."

Karen Creasy

Karen Creasy
Petitions Examiner
Office of Petitions
Office of the Deputy Commissioner
for Patent Examination Policy

cc: Paul Harrison, MDW-4B03,(FAX-273-5468)
Deneise Boyd, MDE-3D39 (FAX-273-5124)
Mary Louise McAskill, ST-8C15 (FAX 305-4372)
Niomi Farmer, ST-8C14 (FAX-305-4372)
Mary E. Johnson (Cookie), MDE-7C71 (FAX 273-0038
Duane Davis P/OPC MDE-7D89

UNITED STATES PATENT AND TRADEMARK OFFICE

Commissioner for Patents
United States Patent and Trademark Office
P.O. Box 1450
Alexandria, VA 22313-1450
www.uspto.gov

KENYON & KENYON LLP
1500 K STREET N.W.
SUITE 700
WASHINGTON DC 20005

COPY MAILED
NOV 2 0 2006
OFFICE OF PETITIONS

In re Application of	:	
Takashi Matsutani et al	:	
Application No. 11/067,655	:	ON PETITION
Filed: February 28, 2005	:	
Attorney Docket No. 10517-247	:	

This is a decision on the petition, filed November 17, 2006, under 37 CFR 1.313(c)(2) to withdraw the above-identified application from issue after payment of the issue fee.

The petition is **GRANTED**.

The above-identified application is withdrawn from issue for consideration of a submission under 37 CFR 1.114 (request for continued examination). See 37 CFR 1.313(c)(2).

Petitioner is advised that the issue fee paid on October 17, 2006 in the above-identified application cannot be refunded. If, however, the above-identified application is again allowed, petitioner may request that it be applied towards the issue fee required by the new Notice of Allowance.[1]

Telephone inquiries should be directed to the undersigned at (571) 272-3208.

The examiner of Technology Center AU 3747 will consider the request for continued examination under 37 CFR 1.114.

Karen Creasy
Petitions Examiner
Office of Petitions

---

[1] The request to apply the issue fee to the new Notice may be satisfied by completing and returning the new Issue Fee Transmittal Form PTOL-85(b), which includes the following language thereon: "Commissioner for Patents is requested to apply the Issue Fee and Publication Fee (if any) or re-apply any previously paid issue fee to the application identified above." Petitioner is advised that, whether a fee is indicated as being due or not, the Issue Fee Transmittal Form **must** be completed and timely submitted to avoid abandonment. Note the language in bold text on the first page of the Notice of Allowance and Fee(s) Due (PTOL-85).

UNITED STATES PATENT AND TRADEMARK OFFICE

UNITED STATES DEPARTMENT OF COMMERCE
United States Patent and Trademark Office
Address: COMMISSIONER FOR PATENTS
P.O. Box 1450
Alexandria, Virginia 22313-1450
www.uspto.gov

Sadler, Breen, Morasch & Colby, ps
422 W. Riverside Ave, Suite 424
Spokane, WA 99201

Mail Date: 04/27/2010

Applicant	: Arild O. Gautestad	: DECISION ON REQUEST FOR
Patent Number	: 7660810	: RECALCULATION of PATENT
Issue Date	: 02/09/2010	: TERM ADJUSTMENT IN VIEW
Application No	: 11/067,676	: OF WYETH AND NOTICE OF INTENT TO
Filed	: 03/01/2005	: ISSUE CERTIFICATE OF CORRECTION
		:

The Request for Recalculation is **GRANTED** to the extent indicated.

The patent term adjustment has been determined to be **1309** days. The USPTO will *sua sponte* issue a certificate of correction reflecting the amount of PTA days determined by the recalculation.

Prior to the issuance of the certificate of correction, the USPTO will afford patentee an opportunity to be heard and request reconsideration. Accordingly, patentee has **one month or thirty (30) days**, whichever is longer, to file a request for reconsideration of this patent term adjustment calculation. See 35 U.S.C. 154(b)(3)(B)(ii) and 37 CFR 1.322(a)(4). No extensions of time will be granted under 37 CFR 1.136.

Patentee should use document code PET.OP if electronically filing a request for reconsideration of this patent term adjustment calculation. The patentee must also include the information required by 37 CFR 1.705(b)(2) and the fee required by 37 CFR 1.18(e). If patentee does not file a timely request for reconsideration of this patent term adjustment calculation including the information required by 37 CFR 1.705(b)(2) and the fee required by 37 CFR 1.18(e), the USPTO will issue a certificate of correction reflecting the PTA determination noted above.

Patentee should be aware that in order to preserve the right to review in the United States District Court for the District of Columbia of the USPTO patent term adjustment determination, patentee must ensure that he or she also take the steps required under 35 U.S.C. 154(b)(4)(A) in a timely manner. Nothing in the request for recalculation should be construed as providing an alternative time frame for commencing a civil action under 35 U.S.C. 154(b)(4)(A).

Any questions concerning this decision should be directed to the Office of Patent Legal Administration at 571-272-7702.

UNITED STATES PATENT AND TRADEMARK OFFICE

COMMISSIONER FOR PATENTS
UNITED STATES PATENT AND TRADEMARK OFFICE
P.O. BOX 1450
ALEXANDRIA, VA 22313-1450
www.uspto.gov

BUCHANAN INGERSOLL PC
(INCLUDING BURNS, DOANE, SWECKER & MATHIS)
POST OFFICE BOX 1404
ALEXANDRIA VA 22313-1404

COPY MAILED
SEP 0 9 2005
OFFICE OF PETITIONS

In re Application of	:	
Boston, et al.	:	DECISION REFUSING STATUS
Application No. 11/067,722	:	UNDER 37 CFR 1.47(a)
Filed: March 1, 2005	:	
Atty. Dkt. No.: 033275-445	:	
For: SEALING BODY	:	

This decision is in response to the petition under 37 CFR 1.47(a), filed July 6, 2005.

The petition is **DISMISSED**.

Rule 47 applicants are given TWO MONTHS from the mailing date of this decision to reply, correcting the below-noted deficiencies. Any reply should be entitled "Request for Reconsideration of Petition Under 37 CFR 1.47(a)," and should only address the deficiencies noted below, except that the reply may include an oath or declaration executed by the non-signing inventor. Failure to respond will result in abandonment of the application. Any extensions of time will be governed by 37 CFR 1.136(a).

The above-identified application was filed March 1, 2005 without an executed oath or declaration. Accordingly, a Notice to File Missing Parts of Nonprovisional Application was mailed October April 6, 2005 requiring an executed oath or declaration and a surcharge.

A grantable petition under 37 CFR 1.47(a) requires: (1) proof that the non-signing inventor cannot be reached or refuses to sign the oath or declaration after having been presented with the application papers (specification, claims and drawings); (2) an acceptable oath or declaration in compliance with 35 U.S.C. §§ 115 and 116; (3) the petition fee; and (4) a statement of the last known address of the non-signing inventor.

The instant petition fails to satisfy item (1) set forth above. Petitioners have failed to establish that the non-signing

inventor cannot be reached or refused to sign the oath or declaration after having been presented with the application papers (specification, claims, drawings, and oath or declaration).

The petition indicates that the non-signing inventor has not replied to correspondence, including a copy of the application papers, sent to his last known email address. The petition further indicates that the inventor "left the country a year ago and is currently on a sailing tour around the world." Petitioners have submitted copies of email correspondence sent to what purports to be the email address of the non-signing inventor. Petitioners have thus concluded that the inventor either refuses to sign the declaration or cannot be reached.

Petitioners have failed to establish that the non-signing inventor received a complete copy of the application papers (specification, including claims, drawings, and oath or declaration) and thereafter refused to execute the declaration. Petitioners indicate that an email with the application papers attached thereto was sent to the non-inventor and that to date, no response has been received. There is no indication that a complete copy of the application papers was sent to inventor at the inventor's last known address and that the inventor thereafter refused to execute the application. The electronic transmission of the application papers to the non-signing inventor cannot be relied upon to establish that the non-signing inventor received the application papers and thereafter refused to sign the declaration, particularly when there is no affirmative acknowledgement of receipt of the application papers from the non-signing inventor.

Before a refusal to sign an oath or declaration can be alleged, it must be demonstrated that a *bona fide* effort has been made to present a copy of the application papers (specification, including claims, drawings, and oath or declaration) to the non-signing inventor. Petitioners have failed to establish that the non-signing inventor received a copy of the application papers (specification, claims, drawings, and oath or declaration) and thereafter refused to execute the oath or declaration. Any renewed petition should be accompanied by evidence to establish that the non-signing inventor was sent a complete copy of the application papers (specification, claims, drawings, and oath or declaration) and thereafter refused to execute the declaration. Petitioners may wish to provide the Office copies of letters sent to the inventors indicating the enclosure of the application papers (specification, claims, drawings, and oath or

declaration). If after the inventor receives the application papers and requests to execute the oat or declaration are refused, these facts should be set forth in a statement of facts signed by the person to whom the refusals were made and detailing with specificity the exact manner of the refusals. If a written refusal has been made, a copy of the written refusal should be included on renewed petition.

Where inability to reach or locate an inventor is alleged, petitioners are required to establish that diligent effort was made to locate the non-signing inventor, and provide the non-signing inventor with a complete copy of the patent application (**specification, including claims, drawings, and oath or declaration)**. Petitioners have failed to establish that any effort has been made to locate the non-signing inventor. Petitioners merely indicate the inventor is "out of the country."

The mere fact that an inventor is on vacation or out of town and is therefore temporarily unavailable to sign the declaration is not an acceptable reason for filing under 37 CFR 1.47. *See*, MPEP 409.03(b).

Any renewed petition must be supported by evidence that sufficiently establishes that despite diligent effort, the non-signing inventor cannot be located. A statement of facts should be submitted that fully describes the exact facts that are relied on to establish that a *diligent effort* was made to locate the non-signing inventor, such as internet searches, telephone directory searches, etc. The statement of facts must be signed, where at all possible, by a person having *firsthand knowledge* of the facts recited therein. Statements based on hearsay, will not normally be accepted. Petitioner should reference and supply evidence of any such searches in a renewed petition. *See*, MPEP 409.03(d).

Further correspondence with respect to this matter should be addressed as follows:

By mail:	Mail Stop Petition Commissioner for Patents P.O. Box 1450 Alexandria, VA 22313-1450
By facsimile:	(571) 273-8300
By hand:	U.S. Patent and Trademark Office

Customer Service Window
Mail Stop Petition
Randolph Building
401 Dulany Street
Alexandria, VA 22314

Telephone inquiries regarding this decision should be directed to the undersigned at (571) 272-3205.

Alesia M. Brown
Petitions Attorney
Office of Petitions

UNITED STATES PATENT AND TRADEMARK OFFICE

COMMISSIONER FOR PATENTS
UNITED STATES PATENT AND TRADEMARK OFFICE
P.O. BOX 1450
ALEXANDRIA, VA 22313-1450
www.uspto.gov

BUCHANAN INGERSOLL PC
(INCLUDING BURNS, DOANE, SWECKER & MATHIS)
POST OFFICE BOX 1404
ALEXANDRIA VA 22313-1404

COPY MAILED

MAR 0 3 2006

OFFICE OF PETITIONS

In re Application of	:	
Boston, et al.	:	DECISION NOTING JOINDER
Application No. 11/067,722	:	OF INVENTOR AND PETITION
Filed: March 1, 2005	:	UNDER 37 CFR 1.47(a) MOOT
Atty. Dkt. No.: 033275-445	:	
For: SEALING BODY	:	

This decision is in response to the petition under 37 CFR 1.47(a), filed July 6, 2005.

In view of the joinder of the inventor, further consideration under 37 CFR 1.47(a) is not necessary and the petition is considered to be moot. This application does not have any Rule 1.47(a) status and no such status should appear on the file wrapper. This application need not be returned to this Office for further consideration under 37 CFR 1.47(a).

This application is being forwarded to the Office of Initial Patent Examination for further processing.

Telephone inquiries regarding this decision should be directed to the undersigned at (571) 272-3205.

Alesia M. Brown
Petitions Attorney
Office of Petitions

UNITED STATES PATENT AND TRADEMARK OFFICE

UNITED STATES DEPARTMENT OF COMMERCE
United States Patent and Trademark Office
Address: COMMISSIONER FOR PATENTS
P.O. Box 1450
Alexandria, Virginia 22313-1450
www.uspto.gov

SUGHRUE MION, PLLC
2100 PENNSYLVANIA AVENUE, N.W.
SUITE 800
WASHINGTON, DC 20037

Mail Date: 04/20/2010

Applicant	: Ken Sakuma	: DECISION ON REQUEST FOR
Patent Number	: 7608862	: RECALCULATION of PATENT
Issue Date	: 10/27/2009	: TERM ADJUSTMENT IN VIEW
Appliction No	: 11/067,741	: OF WYETH AND NOTICE OF INTENT TO
Filed	: 03/01/2005	: ISSUE CERTIFICATE OF CORRECTION
		:

The Request for Recalculation is **GRANTED** to the extent indicated.

The patent term adjustment has been determined to be **0** days. The USPTO will *sua sponte* issue a certificate of correction reflecting the amount of PTA days determined by the recalculation.

Prior to the issuance of the certificate of correction, the USPTO will afford patentee an opportunity to be heard and request reconsideration. Accordingly, patentee has **one month or thirty (30) days**, whichever is longer, to file a request for reconsideration of this patent term adjustment calculation. See 35 U.S.C. 154(b)(3)(B)(ii) and 37 CFR 1.322(a)(4). No extensions of time will be granted under 37 CFR 1.136.

Patentee should use document code PET.OP if electronically filing a request for reconsideration of this patent term adjustment calculation. The patentee must also include the information required by 37 CFR 1.705(b)(2) and the fee required by 37 CFR 1.18(e). If patentee does not file a timely request for reconsideration of this patent term adjustment calculation including the information required by 37 CFR 1.705(b)(2) and the fee required by 37 CFR 1.18(e), the USPTO will issue a certificate of correction reflecting the PTA determination noted above.

Patentee should be aware that in order to preserve the right to review in the United States District Court for the District of Columbia of the USPTO patent term adjustment determination, patentee must ensure that he or she also take the steps required under 35 U.S.C. 154(b)(4)(A) in a timely manner. Nothing in the request for recalculation should be construed as providing an alternative time frame for commencing a civil action under 35 U.S.C. 154(b)(4)(A).

Any questions concerning this decision should be directed to the Office of Patent Legal Administration at 571-272-7702.

UNITED STATES PATENT AND TRADEMARK OFFICE

05 JAN 2006

Commissioner for Patents
United States Patent and Trademark Office
P.O. Box 1450
Alexandria, VA 22313-1450
www.uspto.gov

BARNES & THORNBURG
750-17th Street NW
Suite 900
Washington, DC 20006

In re Application of:	:	
STEWART, Kenneth, G., et al.	:	DECISION ON PETITION
U.S. Application No.: 11/067,743	:	UNDER 37 CFR 1.78(a)(3)
Atty Docket No.: 6714/43751	:	
For: DEVICE FOR IMPLEMENT	:	
STORAGE	:	

This is a decision on the "Petition Under 37 CFR 1.78(a)(3)" filed November 22, 2005. The petition seeks acceptance of an unintentionally delayed claim under 35 U.S.C. § 120 for the benefit of the prior-filed nonprovisional application set forth in the concurrently filed amendment.

The petition is **DISMISSED**.

The present nonprovisional application was filed after November 29, 2000, and the claim herein for the benefit of priority to the prior filed nonprovisional application is submitted after the expiration of the period specified in 37 CFR 1.78(a)(2)(ii). Therefore this is a proper petition under 37 CFR 1.78(a)(3).

A petition for acceptance of a claim for late priority under 37 CFR 1.78(a)(3) is only applicable to those applications filed on or after November 29, 2000. Further, the petition is appropriate only after the expiration of the period specified in 37 CFR 1.78(a)(2)(ii). In addition, the petition under 37 CFR 1.78(a)(3) must be accompanied by:

(1) the reference to the prior-filed application, as required by 35 U.S.C. 120 and 37 CFR 1.78(a)(2)(i), unless previously submitted;
(2) the surcharge set forth in 37 CFR 1.17(t); and
(3) a statement that the entire delay between the date the claim was due under 37 CFR 1.78(a)(2)(ii) and the date the claim was filed was unintentional.

The present petition does not comply with item (1) above.

An amendment adding a reference to the prior-filed nonprovisional application to the first sentence of the specification following the title has been included in a concurrently filed amendment. However, the prior-filed nonprovisional application referred to in the amendment (U.S. Application No. 10/244,552; U.S Patent No. 6,766,997) was not copending with the present application. Specifically, the prior-filed application issued as a patent on July 27,2004,

while the present application was not filed until March 01, 2005 (See 35 U.S.C. 120: continuation application must be "filed before the patenting" of the prior application; see also MPEP section 201.11(II)(B)). Because the present application was not copending with the prior-filed application, the reference to the prior-filed application does not satisfy the requirements of 35 U.S.C. 120 and 37 CFR 1.78(a)(3)(i).

Based on the above, applicant has not satisfied all the requirements for a grantable petition under 37 CFR 1.78(a)(3).

Further correspondence with respect to this matter should be addressed as follows:

By mail: Mail Stop PETITIONS
Commissioner for Patents
Post Office Box 1450
Alexandria, VA 22313-1450

By hand: Customer Service Window
Mail Stop Petitions
Randolph Building
401 Dulany Street
Alexandria, VA 22314

By fax: (571) 273-8300
ATTN: Office of Petitions

Any questions concerning this matter may be directed to Richard M. Ross at (571) 272-3296.

Boris Milef
Legal Examiner
Office of Petitions and PCT Legal Administration

UNITED STATES PATENT AND TRADEMARK OFFICE

Commissioner for Patents
United States Patent and Trademark Office
P.O. Box 1450
Alexandria, VA 22313-1450
www.uspto.gov

THOMAS, KAYDEN, HORSTEMEYER & RISLEY, L.L.P.
600 GALLERIA PARKWAY, S.E., SUITE 1500
ATLANTA, GA 30339-5994

COPY MAILED
AUG 26 2008

In re Application of	:	
Hung et al.	:	
Application No. 11/067,767	:	DECISION ON PETITION
Filed: February 28, 2005	:	
Attorney Docket No. 250122-2280	:	

This is a decision on the petition under the unintentional provisions of 37 CFR 1.137(b), filed July 24, 2008, to revive the above-identified application.

The petition is **GRANTED**.

The application became abandoned for failure to reply in a timely manner to the non-final Office action mailed December 12, 2007, which set a shortened statutory period for reply of three (3) months. No extensions of time under the provisions of 37 CFR 1.136(a) were timely obtained. Accordingly, the application became abandoned on March 13, 2007.

The petition satisfies the requirements of 37 CFR 1.137(b) in that petitioner has supplied (1) the reply in the form of an Amendment, (2) the petition fee of $1,540.00, and (3) an adequate statement of unintentional delay.

Telephone inquiries concerning this decision should be directed to Joan Olszewski at (571) 272-7751.

This application is being referred to Technology Center AU 1794 for appropriate action by the Examiner in the normal course of business on the reply received.

Liana Walsh
Petitions Examiner
Office of Petitions

UNITED STATES PATENT AND TRADEMARK OFFICE

Commissioner for Patents
United States Patent and Trademark Office
P.O. Box 1450
Alexandria, VA 22313-1450
www.uspto.gov

WOODCOCK WASHBURN LLP (MICROSOFT CORPORATION)
CIRA CENTRE, 12TH FLOOR
2929 ARCH STREET
PHILADELPHIA, PA 19104-2891

MAILED

JUN 07 2010

OFFICE OF PETITIONS

In re Application of :
Lijiang Fang, et al. :
Application No.: 11/067,778 :
Filed: February 28, 2005 :
Attorney Docket No.: MSFT-4779/311849.01 :

ON PETITION

This is a decision on the petition, filed June 4, 2010, under 37 CFR 1.313(c)(2) to withdraw the above-identified application from issue after payment of the issue fee.

The petition is **GRANTED**.

The above-identified application is withdrawn from issue for consideration of a submission under 37 CFR 1.114 (request for continued examination). See 37 CFR 1.313(c)(2).

Petitioner is advised that the issue fee paid on June 4, 2010, cannot be refunded. If, however, this application is again allowed, petitioner may request that it be applied towards the issue fee required by the new Notice of Allowance.[1]

Telephone inquiries relating to this decision should be directed to the undersigned at (571) 272-3204.

The application is being referred to Technology Center AU 2168 for further processing of the request for continued examination under 37 CFR 1.114 and for consideration of the concurrently filed Information Disclosure Statement (IDS).

/SDB/

Sherry D. Brinkley
Petitions Examiner
Office of Petitions

[1] *The request to apply the issue fee to the new Notice may be satisfied by completing and returning the new Part B – Fee(s) Transmittal Form (along with any balance due at the time of submission). Petitioner is advised that the Issue Fee Transmittal Form must be completed and timely submitted to avoid abandonment of the application.*

UNITED STATES PATENT AND TRADEMARK OFFICE

Commissioner for Patents
United States Patent and Trademark Office
P.O. Box 1450
Alexandria, VA 22313-1450
www.uspto.gov

COPY MAILED

APR 0 5 2006

OFFICE OF PETITIONS

LOUIS PAUL HERZBERG
3 CLOVERDALE LANE
MONSEY, NY 10952

In re Application of Takiguchi et al. :
Application No. 11/067,809 : Decision on Petition
Filing Date: February 28, 2005 :
Attorney Docket No. JP920040010US1 :

This is a decision on the petition filed January 27, 2006, under 37 CFR 1.181 to withdraw the holding of abandonment of the above-identified application.

The petition is **dismissed.**

Facts:

On March 24, 2005, a Notice to File Missing Parts was mailed to,

IBM Corporation, T.J. Watson Research Center
PO Box 218
Yorktown Heights, NY 10598

The USPS returned the Notice undelivered on April 7, 2005. The returned envelope contained the following USPS language,

Return to Sender
Addressee Unknown
Please Update Your Mailing List

A request to change the address of record was filed on November 1, 2005.

A Notice of Abandonment was mailed on December 7, 2005.

The instant petition was filed on January 27, 2006.

The Office mailed a Notice on March 1, 2006, vacating the prior Notice of Abandonment.

Discussion:

The March 1, 2006 Notice is vacated.

The record indicates the possibility exists that the address of record on March 24, 2005, was not an accurate and current address for petitioner.

The Office requests a statement from petitioner verifying the address of record was both accurate and current as of March 24, 2005.

Any request for reconsideration must be submitted within TWO (2) MONTHS from the mail date of this decision. No further petition fee is required for the request. Extensions of time under 37 CFR 1.136(a) are NOT permitted. The reconsideration request should include a cover letter entitled "Renewed Petition under 37 CFR 1.181." This is **not** final agency action within the meaning of 5 U.S.C. § 704.

Further correspondence with respect to this matter should be addressed as follows:

By mail: Mail Stop Petition
Commissioner for Patents
P.O. Box 1450
Alexandria, VA 22313-1450

By facsimile: (571) 273-8300
Attn: Office of Petitions

By hand: U.S. Patent and Trademark Office
Customer Service Window
Randolph Building
401 Dulany Street
Alexandria, VA 22314

Telephone inquiries regarding this communication should be directed to Petitions Attorney Steven Brantley at (571) 272-3203.

Charles Steven Brantley
Senior Petitions Attorney
Office of Petitions

UNITED STATES PATENT AND TRADEMARK OFFICE

Commissioner for Patents
United States Patent and Trademark Office
P.O. Box 1450
Alexandria, VA 22313-1450
www.uspto.gov

LOUIS PAUL HERZBERG
3 CLOVERDALE LANE
MONSEY, NY 10952

COPY MAILED
AUG 0 7 2006
OFFICE OF PETITIONS

In re Application of Takiguchi et al. :
Application No. 11/067,809 : Decision on Petition
Filing Date: February 28, 2005 :
Attorney Docket No. JP920040010US1 :

This is a decision on the petition filed May 30, 2006, under 37 CFR 1.181 to withdraw the holding of abandonment of the above-identified application.

The petition is **granted**.

Facts:

On March 24, 2005, a Notice to File Missing Parts was mailed to,

IBM Corporation, T.J. Watson Research Center
PO Box 218
Yorktown Heights, NY 10598

The instant petition establishes the address above was a valid address on March 24, 2005.

The USPS returned the Notice undelivered on April 7, 2005. The returned envelope contained the following USPS language,

Return to Sender
Addressee Unknown
Please Update Your Mailing List

A Notice of Abandonment was mailed on December 7, 2005.

Discussion:

Petitioner has established non-receipt of the Notice to File Missing Parts. Therefore, the Notice to File Missing Parts mailed March 24, 2005, is vacated.

The Notice of Abandonment is hereby vacated and the holding of abandonment withdrawn.

The application will be examined in due course.

Telephone inquiries regarding this communication should be directed to Petitions Attorney Steven Brantley at (571) 272-3203.

Charles Steven Brantley
Senior Petitions Attorney
Office of Petitions

UNITED STATES PATENT AND TRADEMARK OFFICE

Commissioner for Patents
United States Patent and Trademark Office
P.O. Box 1450
Alexandria, VA 22313-1450
www.uspto.gov

FISH & RICHARDSON PC
P.O. BOX 1022
MINNEAPOLIS MN 55440-1022

COPY MAILED

MAY 12 2009

OFFICE OF PETITIONS

In re Patent No. 7,476,512
Issued: January 13, 2009
Application No. 11/067,811
Filed: February 28, 2005
Attorney Docket No. 10287-0083001
/MGH 2513

: DECISION ON APPLICATION
: FOR PATENT TERM ADJUSTMENT

This is a decision on the "APPLICATION FOR PATENT TERM ADJUSTMENT UNDER 37 C.F.R. § 1.705(d)" filed March 13, 2009, requesting that the patent term adjustment determination for the above-identified patent be changed from three hundred sixteen (316) days to six hundred thirty-six (636) days.

The request for reconsideration of patent term adjustment is **DISMISSED**.

On January 13, 2009, the above-identified application matured into US Patent No. 7,476,512 with a patent term adjustment of 316 days. This request for reconsideration of patent term adjustment was timely filed within two months of the issue date of the patent. See 37 CFR 1.705(d).

The Office acknowledges submission of the $200.00 fee set forth in 37 CFR 1.18(e). No additional fees are required.

Patentees request recalculation of the patent term adjustment based on the decision in Wyeth v. Dudas, 580 F. Supp. 2d 138, 88 U.S.P.Q. 2d 1538 (D.D.C. 2008). Patentees assert that in view of the decision in Wyeth, they are "entitled to a total patent term adjustment of 636 days, which is the sum of 320 days of patent term adjustment due to exceeding three year pendency and 382 days due to USPTO delay in prosecution."

The 320-day period is calculated based on the application having been filed under 35 U.S.C. 111(a) on February 28, 2005, and the patent having been issued on January 13, 2009, three years and 320 days later. Patentees assert that in addition to this 320-day period, they are entitled to a period of adjustment due to examination delay pursuant to 37 CFR 1.702(a), of 382 days for the failure by the Office to mail at least one of a notification under 35 U.S.C. 132 not later than fourteen months after the date on which the application was filed under 35 U.S.C. 111(a), pursuant to 37 CFR 1.702(a)(1).

Under 37 CFR 1.703(f), patentees are entitled to a period of patent term adjustment equal to the period of delays based on the grounds set forth in 37 CFR 1.702 reduced by the period of time equal to the period of time during which patentees failed to engage in reasonable efforts to conclude prosecution pursuant to 37 CFR 1.704. In other words, it is the period of Office delay reduced by the period of applicant delay. Patentees do not dispute the period of reduction of 66 days for applicant delay.

Patentees do not dispute that the total period of Office delay is the sum of the period of Three Years Delay (320 days) and the period of Examination Delay (382 days) to the extent that these periods of delay are not overlapping. However, in effect, patentees contend that no portion of the Three Year Delay period overlaps with the period of 14-month examination delay. Accordingly, patentees submit that the total period of adjustment for Office delay is 636 days, which is the sum of the period of Three Year Delay (320 days) and the period of Examination Delay (382 days), reduced by the period of overlap (0 days). As such, patentees assert entitlement to a patent term adjustment of 636 days (320 + 382 reduced by 0 overlap – 66 (applicant delay)).

The Office agrees that as of the issuance of the patent on January 13, 2009, the application was pending three years and 320 days after its filing date. The Office agrees that the action detailed above was not taken within the specified time frame, and thus, the entry of a period of adjustment of 382 days is correct. At issue is whether patentees should accrue 320 days of patent term adjustment for the Office taking in excess of three years to issue the patent, as well as 382 days for Office failure to take a certain action within a specified time frame (or examination delay).

The Office contends that 320 days overlap. Patentees' calculation of the period of overlap is inconsistent with the Office's interpretation of this provision. 35 U.S.C. 154(b)(2)(A) limits the adjustment of patent term, as follows:

> to the extent that the periods of delay attributable to grounds specified in paragraph (1) overlap, the period of any adjustment granted under this subsection shall not exceed the actual number of days the issuance of the patent was delayed.

Likewise, 35 CFR 1.703(f) provides that:

> To the extent that periods of delay attributable to the grounds specified in § 1.702 overlap, the period of adjustment granted under this section shall not exceed the actual number of days the issuance of the patent was delayed.

As explained in *Explanation of 37 CFR 1.703(f) and of the United States Patent and Trademark Office Interpretation of 35 U.S.C. 154(b)(2)(A)*, 69 Fed. Reg. 34283 (June

21, 2004), the Office interprets 35 U.S.C. 154(b)(2)(A) as permitting either patent term adjustment under 35 U.S.C. 154(b)(1)(A)(i)-(iv), or patent term adjustment under 35 U.S.C. 154(b)(1)(B), but not as permitting patent term adjustment under both 35 U.S.C. 154(b)(1)(A)(i)-(iv) and 154(b)(1)(B). Accordingly, the Office implements the overlap provision as follows:

> If an application is entitled to an adjustment under 35 U.S.C. 154(b)(1)(B), the entire period during which the application was pending (except for periods excluded under 35 U.S.C. 154(b)(1)(B)(i)-(iii)), and not just the period beginning three years after the actual filing date of the application, is the period of delay under 35 U.S.C. 154(b)(1)(B) in determining whether periods of delay overlap under 35 U.S.C. 154(b)(2)(A). Thus, any days of delay for Office issuance of the patent more than 3 years after the filing date of the application, which overlap with the days of patent term adjustment accorded prior to the issuance of the patent will not result in any additional patent term adjustment. See 35 U.S.C. 154(b)(1)(B), 35 U.S.C. 154(b)(2)(A), and 37 CFR § 1.703(f). See *Changes to Implement Patent Term Adjustment Under Twenty Year Term; Final Rule*, 65 Fed. Reg. 56366 (Sept. 18, 2000). See also *Revision of Patent Term Extension and Patent Term Adjustment Provisions; Final Rule*, 69 Fed. Reg. 21704 (April 22, 2004), 1282 Off. Gaz. Pat. Office 100 (May 18, 2004). See also *Explanation of 37 CFR 1.703(f) and of the United States Patent and Trademark Office Interpretation of 35 U.S.C. 154(b)(2)(A),* 69 Fed. Reg. 34283 (June 21, 2004).

The current wording of § 1.703(f) was revised in response to the misinterpretation of this provision by a number of Patentees. The rule was slightly revised to more closely track the corresponding language of 35 U.S.C. 154(b)(2)(A). The relevant portion differs only to the extent that the statute refers back to provisions of the statute whereas the rule refers back to sections of the rule. This was not a substantive change to the rule nor did it reflect a change of the Office's interpretation of 35 U.S.C. 154(b)(2)(A). As stated in the *Explanation of 37 CFR 1.703(f) and of the United States Patent and Trademark Office Interpretation of 35 U.S.C. 154(b)(2)(A)*, the Office has consistently taken the position that if an application is entitled to an adjustment under the three-year pendency provision of 35 U.S.C. 154(b)(1)(B), the entire period during which the application was pending before the Office (except for periods excluded under 35 U.S.C. 154(b)(1)(B)(i)-(iii)), and not just the period beginning three years after the actual filing date of the application, is the relevant period under 35 U.S.C. 154(b)(1)(B) in determining whether periods of delay "overlap" under 35 U.S.C. 154(b)(2)(A).

This interpretation is consistent with the statute. Taken together the statute and rule provide that to the extent that periods of delay attributable to grounds specified in 35 U.S.C. 154(b)(1) and in corresponding § 1.702 overlap, the period of adjustment granted shall not exceed the actual number of days the issuance of the patent was delayed. The grounds specified in these sections cover the A) guarantee of prompt

Patent and Trademark Office responses, B) guarantee of no more than 3-year application pendency, and C) guarantee or adjustments for delays due to interference, secrecy orders and appeals. A section by section analysis of 35 U.S.C. 154(b)(2)(A) specifically provides that:

> Section 4402 imposes limitations on restoration of term. In general, pursuant to [35 U.S.C.] 154(b)(2)(A)-(C), total adjustments granted for restorations under [35 U.S.C. 154](b)(1) are reduced as follows: (1) To the extent that there are multiple grounds for extending the term of a patent that may exist simultaneously (e.g., delay due to a secrecy order under [35 U.S.C.] 181 and administrative delay under [35 U.S.C.] 154(b)(1)(A)), the term should not be extended for each ground of delay but only for the actual number of days that the issuance of a patent was delayed; See 145 Cong. Rec. S14,718[1]

As such, the period for over three-year pendency does not overlap only to the extent that the actual dates in the period beginning three years after the date on which the application was filed overlap with the actual dates in the periods for failure of the Office to take action within specified time frames. In other words, consideration of the overlap does not begin three years after the filing date of the application. It is incorrect to treat the relevant period as starting on February 28, 2008, the date that is three years after the actual filing date of the application.

In this instance, the relevant period under 35 U.S.C. 154(b)(1)(B) in determining whether periods of delay "overlap" under 35 U.S.C. 154(b)(2)(A) is the entire period during which the application was pending before the Office, February 28, 2005, to the date the patent issued on January 13, 2009. Prior to the issuance of the patent, 382 days of patent term adjustment were accorded for the Office failing to respond within a specified time frame during the pendency of the application. All of the 320 days for Office delay in issuing the patent overlap with the 382 days of Office delay. During that time, the issuance of the patent was delayed by 382 days, not 382 + 320 days. The Office took 14 months and 382 days to issue a first Office action. Otherwise, the Office took all actions set forth in 37 CFR 1.702(a) within the prescribed time frames. Nonetheless, given the initial 382 days of Office delay and the 66 days of applicant delay and the time allowed within the time frames for processing and examination, as of the date the patent issued, the application was pending three years and 320 days. The Office did not delay 382 days and then an additional 320 days. Accordingly, 382 days of patent term adjustment (not 382 and 320 days) was properly entered since the period of delay of 320 days attributable to the delay in the issuance of

[1] The AIPA is title IV of the Intellectual Property and Communications Omnibus Reform Act of 1999 (S. 1948), which was incorporated and enacted as law as part of Pub. L. 106-113. The Conference Report for H.R. 3194, 106th Cong. 1st Sess. (1999), which resulted in Pub. L. 106-113, does not contain any discussion (other than the incorporated language) of S. 1948. A section-by-section analysis of S. 1948, however, was printed in the Congressional Record at the request of Senator Lott, See 145 Cong. Rec. S14,708-26 (1999)(daily ed. Nov. 17, 1999).

the patent overlaps with the adjustment of 382 days attributable to grounds specified in § 1.702(a)(1). Entry of both periods is not warranted. Thus, 382 days is determined to be the actual number of days that the issuance of the patent was delayed, considering the 320 days over three years to the issuance of the patent.

Accordingly, at issuance, the Office properly entered no additional days of patent term adjustment for the Office taking in excess of three years to issue the patent.

In view thereof, no adjustment to the patent term will be made.

Patentees remain under a duty to disclose to the Office entry of additional patent term adjustment that is not warranted.

Telephone inquiries specific to this decision should be directed to Senior Petitions Attorney Patricia Faison-Ball at (571) 272-3212.

Kery A. Fries

Kery A. Fries
Senior Legal Advisor
Office of Patent Legal Administration
Office of Deputy Commissioner
for Examination Policy

UNITED STATES PATENT AND TRADEMARK OFFICE

Commissioner for Patents
United States Patent and Trademark Office
P.O. Box 1450
Alexandria, VA 22313-1450
www.uspto.gov

FISH & NEAVE IP GROUP
ROPES & GRAY
ONE INTERNATIONAL PLACE
BOSTON, MA 02110-2624

COPY MAILED

APR 2 6 2006

OFFICE OF PETITIONS

In re Application of	:	
George Church	:	
Application No. 11/067,812	:	DECISION ON PETITION
Filed: February 28, 2005	:	TO MAKE SPECIAL UNDER
Attorney Docket No. SYNB-P02-004	:	37 CFR 1.102(d)
	:	

This is a decision on the petition under 37 CFR § 1.102(d), filed December 15, 2005, to make the above-identified application special based on applicants who are small entities filing biotechnology applications as set forth in M.P.E.P. § 708.02, Section XII.

The petition is **GRANTED**.

A grantable petition to make an application special under 37 CFR § 1.102(d) and MPEP § 708.02, Section XII: Special Status for Applications Relating to Biotechnology Filed by Applicants Who are Small Entities, must be accompanied by (1) the petition fee under 37 CFR 1.17(h); and (2) state:

> (A) That small entity status has been established or include a statement establishing small entity status;
>
> (B) That the subject of the patent application is a major asset of the small entity; and
> (C) That the development of the technology will be significantly impaired if examination of the patent application is delayed, including an explanation of the basis for making the statement.

The petition complies with all the above stated requirements. Accordingly, the above-identified application has been accorded "special" status.

Telephone inquiries concerning this decision should be directed to Wan Laymon at 571-272-3220.

All other inquiries concerning either the examination or status of the application should be directed to the Technology Center.

This application is being referred to the Office of Initial Patent Examination for preexamination processing. This application will be accorded "special" status when preexamination processing is done.

Amelia Au
Petitions Examiner
Office of Petitions

UNITED STATES PATENT AND TRADEMARK OFFICE

Commissioner for Patents
United States Patent and Trademark Office
P.O. Box 1450
Alexandria, VA 22313-1450
www.uspto.gov

FISH & NEAVE IP GROUP
ROPES & GRAY LLP
ONE INTERNATIONAL PLACE
BOSTON, MA 02110-2624

COPY MAILED

FEB 1 2 2007

OFFICE OF PETITIONS

In re Application of Church et al. :
Application No. 11/067,812 : Decision on Petition
Filing Date: February 28, 2005 :
Attorney Docket No. SYNB-P02-004 :

This is a decision on the petition under 37 CFR 1.181, filed November 3, 2006, to withdraw the holding of abandonment.

The petition is **granted.**

The Office mailed a Notice to File Missing Parts of Application (Notice) on March 25, 2005.

The Notice set a period for reply of two (2) months from the mail date of the Notice and stated extensions of time under the provisions of 37 CFR 1.136(a) were allowed.

Petitioner filed a reply on July 28, 2005. The reply contains a certificate of mailing date of July 25, 2005. The reply included a request for a two-month extension of time, an executed declaration, new drawings, a request for refund, and a preliminary amendment.

The papers filed July 28, 2005, were scanned into the electronic image file wrapper. For unknown reasons, the papers were all scanned under the single code WFEE indicating the papers were simply a Fee Worksheet. The papers were also incorrectly scanned with a date of September 23, 2005.

A review of the July 28, 2005, indicates the papers were timely filed. Therefore, the Notice of Abandonment is hereby vacated and the holding of abandonment withdrawn.

The Office of Initial Examination will be informed of the instant decision and will take steps to prepare the application for examination in due course.

Telephone inquiries regarding this communication should be directed to Petitions Attorney Steven Brantley at (571) 272-3203.

Charles Steven Brantley
Senior Petitions Attorney
Office of Petitions

UNITED STATES PATENT AND TRADEMARK OFFICE

Commissioner for Patents
United States Patent and Trademark Office
P.O. Box 1450
Alexandria, VA 22313-1450
www.uspto.gov

Townsend and Townsend and Crew, LLP
Two Embarcadero Center
Eighth Floor
San Francisco, CA 94111-3834

COPY MAILED

MAY 16 2008

OFFICE OF PETITIONS

In re Application of	:	
James F. Zucherman et al.	:	
Application No. 11/067,835	:	DECISION ON PETITION
Filed: February 28, 2005	:	TO WITHDRAW
Attorney Docket No. 19433A-004010US	:	FROM RECORD
	:	

This is a decision on the Request to Withdraw as attorney or agent of record under 37 C.F.R. § 1.36(b), filed November 14, 2007.

The request is **NOT APPROVED** as moot.

A review of the file record indicates that the power of attorney to Mark D. Barrish and all attorneys/agents associated with customer number 20350 has been revoked by the assignee of the patent application on December 21, 2007. Accordingly, the request to withdraw under 37 C.F.R. § 1.36(b) is moot.

All future communications from the Office will continue to be directed to the below-listed address until otherwise notified by applicant.

Telephone inquires concerning this decision should be directed to Kimberly Inabinet at 571-272- 4618.

Kimberly Inabinet
Petitions Examiner
Office of Petitions

cc: Coats & Bennett/Medtronics
1400 Crescent Green
Suite 300
Cary, NC 27518

UNITED STATES PATENT AND TRADEMARK OFFICE

Commissioner for Patents
United States Patent and Trademark Office
P.O. Box 1450
Alexandria, VA 22313-1450
www.uspto.gov

COPY MAILED

OCT 27 2008

OFFICE OF PETITIONS

MERCHANT & GOULD PC
P.O. BOX 2903
MINNEAPOLIS, MN 55402-0903

In re Application of
Roy D. Cideciyan et al
Application No. 11/067,851
Filed: February 28, 2005
Attorney Docket No.
15872.0092US01/HS.J9200401

ON PETITION

This is a decision on the petition under 37 CFR 1.137(b), filed July 17, 2008, to revive the above-identified application.

The petition is **GRANTED**.

The above-identified application became abandoned for failure to reply in a timely manner to the non-final Office action mailed October 10, 2007, which set a shortened statutory period for reply of three (3) months. No extension of time under the provisions of 37 CFR 1.136(a) were obtained. Accordingly, the above-identified application became abandoned on January 11, 2008.

An extension of time under 37 CFR 1.136 must be filed prior to the expiration of the maximum extendable period for reply. See In re Application of S., 8 USPQ2d 1630, 1631 (Comm'r Pats. 1988). Accordingly, since the $1050 extension of time submitted with the petition on July 17, 2008 was subsequent to the maximum extendable period for reply, this fee is unnecessary and will be credit to petitioner's credit card.

Telephone inquiries concerning this decision should be directed to Irvin Dingle at (571) 272-3210.

This matter is being referred to Technology Center AU 2112 for further processing.

Irvin Dingle
Petitions Examiner
Office of Petitions

UNITED STATES PATENT AND TRADEMARK OFFICE

Commissioner for Patents
United States Patent and Trademark Office
P.O. Box 1450
Alexandria, VA 22313-1450
www.uspto.gov

HOVEY WILLIAMS LLP
2405 GRAND BLVD., SUITE 400
KANSAS CITY, MO 64108

COPY MAILED

SEP 2 3 2005

OFFICE OF PETITIONS

In re Application of	:	
Graef, et al.	:	
Application No. 11/067,857	:	ON PETITION
Filed: February 28, 2005	:	
Attorney Docket No. 35967A-CHT1	:	

This is in response to the petition under 37 CFR 1.182, filed May 3, 2005, to have drawings transferred from application 10/679,835 to the above-cited application.

The petition is **granted**.

A review of the application file history revealed that a Notice to File Corrected Application Papers was mailed on March 24, 2005, requiring replacement drawings to be filed. The notice allowed a two-month period for reply. On May 3, 2005, the instant petition was filed requesting that the drawings be transferred from the prior related application 10/679,835 because of extenuating circumstances. It is noted that the drawings cannot be transferred from application 09/664,576 because it has matured into a patent and is now part of the public record. The drawings were found in application 10/679,835, which is currently abandoned, therefore, the drawings can be transferred from application 10/679,835 to application 11/067,857.

The fee for the instant petition is $400.00, as authorized by 37 CFR 1.17(f). See 37 CFR 1.182. The amount of $130.00 was received previously; deposit account 19-0522 will be charged an additional $270.00, accordingly.

The application file is being directed to the Office of Initial Patent Examination for further processing.

Telephone inquiries concerning this decision may be directed to the undersigned at (571) 272-3222.

Kenya A. McLaughlin
Petitions Attorney
Office of Petitions

UNITED STATES PATENT AND TRADEMARK OFFICE

COMMISSIONER FOR PATENTS
UNITED STATES PATENT AND TRADEMARK OFFICE
P.O. BOX 1450
ALEXANDRIA, VA 22313-1450
www.uspto.gov

Paper No.

Verne E. Thomsen
1681 Co Rd 16
Ames NE 68621

COPY MAILED

SEP 10 2007

OFFICE OF PETITIONS

In re Application of :
Verne Thomsen : DECISION ON PETITION
Application No. 11/067,862 :
Filed: February 28, 2005 :
Attorney Docket No. E0303-2U1 :

This is in response to the communication filed April 17, 2007 by applicant. Applicant states that his attorney is on vacation and he must reply personally to the Notice of Abandonment. This paper is being treated as a PETITION UNDER 37 C.F.R. § 1.181(a) TO WITHDRAW THE HOLDING OF ABANDONMENT.

The above-identified application became abandoned for failure to timely file a proper reply to the Office action mailed September 1, 2006. This Office action set a shortened statutory period of the longer of three months for reply, with extensions of time obtainable under § 1.136(a). No reply considered received in the Office and no extension of time obtained, the above-identified application became abandoned on December 2, 2006. A courtesy Notice of Abandonment was mailed on April 5, 2007.

In response, applicant timely filed the instant petition, asserting that the response to the Office action was timely filed. Applicant says please find an enclosed copy of the reply with my signature dated November 17, 2006 and transmitted within 24 hours by my patent attorney. The petition includes a copy of the reply.

The image file wrapper is the Official record of the papers received in this application. No reply filed on or about

November 17, 2006 is present in the image file wrapper. Accordingly, it is concluded that no response was received to the Office action on or about November 17, 2006.

Moreover, applicant has not submitted persuasive evidence to overcome this conclusion. Petitioner has not made an adequate showing pursuant to 37 C.F.R. 1.8(b) that the response should be considered timely filed. The response as resubmitted does not include a certificate of mailing.

Nor has applicant submitted a copy of an itemized and date-stamped return postcard from the USPTO acknowledging receipt of a reply on or prior to the due date of December 1, 2006.

As applicant has not established timely submission of a response to the Office action mailed September 1, 2006, the holding of abandonment is affirmed.

The petition under § 1.181 is **DISMISSED**.

Any request for reconsideration must be submitted within **TWO (2) MONTHS** from the mail date of this decision. Extensions of time under 37 C.F.R. §1.136(a) are not permitted. See 1.181(f).

Alternatively, applicant may seek revival under the provisions of 37 CFR 1.137. Such a request should include a cover letter entitled "Petition under 37 C.F.R. § 1.137(a)" or "Petition under 37 C.F.R. § 1.137(b)," as appropriate.

Further correspondence with respect to this decision should be addressed as follows:

By mail: Mail Stop Petition
Commissioner for Patents
P.O. Box 1450
Alexandria, VA 22313-1450

By fax: (571) 273-8300
ATTN: Office of Petitions

By hand: Customer Service Window
Randolph Building
401 Dulany Street
Alexandria, VA 22314

Telephone inquiries concerning this decision should be directed to the undersigned at (571) 272-3219.

Nancy Johnson
Senior Petitions Attorney
Office of Petitions

UNITED STATES PATENT AND TRADEMARK OFFICE

Commissioner for Patents
United States Patent and Trademark Office
P.O. Box 1450
Alexandria, VA 22313-1450
www.uspto.gov

PROCOPIO, CORY, HARGREAVES & SAVITCH LLP
530 B STREET
SUITE 2100
SAN DIEGO CA 92101

COPY MAILED

AUG 16 2006

OFFICE OF PETITIONS

In re Application of
Yu-Man Matthew Wong et al.
Application No. 11/067,868
Filed: February 28, 2005
Attorney Docket No. 111925-001US

DECISION ON PETITION
TO WITHDRAW
FROM RECORD

This is a decision on the Request to Withdraw as attorney or agent of record under 37 C.F.R. § 1.36(b) filed October 24, 2005

The request is **APPROVED**.

A grantable request to withdraw as attorney/agent of record must be signed by every attorney/agent seeking to withdraw or contain a clear indication that one attorney is signing on behalf of attorneys/agents associated with customer number 27189. A request to withdraw will not be approved unless at least 30 (thirty) days would remain between the date of approval and the later of the expiration date of a time to file a response or the expiration date of the maximum time period which can be extended under 37 C.F.R. § 1.136(a).

Pattric J. Rawlins signed the request on behalf of all attorneys of record.

Pattric J. Rawlins and all attorneys/agents associated with application have been withdrawn.

Applicant is reminded that there is no attorney of record at this time.

The request to change the correspondence of record is not acceptable as the requested correspondence address is not that of: (1) the first named signing inventor; or (2) an intervening assignee of the entire interest under 37 C.F.R 3.71. All future communications from the Office will be directed to the first named signing inventor or the assignee of the entire interest at the fist copied address below until otherwise properly notified by the applicant.

Telephone inquiries concerning this decision should be directed to Charles Smoot at 571-272-3299.

David Bucci
Petitions Examiner
Office of Petitions

Cc: Yu-Man Matthew Wong
8575 Hopseed Lane
San Diego, CA 92129

cc: Ms. Vicki Martins, CEO
9890 Towne Centre Drive, Suite 200
San Diego, CA 92121

UNITED STATES PATENT AND TRADEMARK OFFICE

Commissioner for Patents
United States Patent and Trademark Office
P.O. Box 1450
Alexandria, VA 22313-1450
www.uspto.gov

GREENBLUM & BERNSTEIN, P.L.C.
1950 ROLAND CLARKE PLACE
RESTON VA 20191

COPY MAILED
AUG 1 1 2006
OFFICE OF PETITIONS

In re Application of	:	
Cohen, Zev	:	DECISION ON PETITION
Application No. 11/067,888	:	TO WITHDRAW
Filed: March 1, 2005	:	FROM RECORD
Attorney Docket No. P26468.A01	:	

This is a decision on the Request to Withdraw as attorney or agent of record under 37 C.F.R. § 1.36(b), filed November 29, 2005.

The request is **APPROVED**.

A grantable request to withdraw as attorney/agent of record must be signed by every attorney/agent seeking to withdraw or contain a clear indication that one attorney is signing on behalf of another/others. A request to withdraw will not be approved unless at least 30 (thirty) days would remain between the date of approval and the later of the expiration date of a time to file a response or the expiration date of the maximum time period which can be extended under 37 C.F.R. § 1.136(a).

The request was signed by Neil F. Greenblum on behalf of all attorneys of record.

All attorneys/agent of record have been withdrawn. Applicant is reminded that there is no attorney of record at this time.

All future correspondence will be directed to the first named inventor, Zev Cohen, at the address indicated below.

Telephone inquires concerning this decision should be directed to the undersigned at (571) 272-3206. All other inquires concerning either the examination or status of the application should be directed to the Technology Center.

Liana Chase
Petitions Examiner
Office of Petitions

Cc:

ZEV COHEN
5624 OAK PLACE
BETHESDA, MD 20817

UNITED STATES PATENT AND TRADEMARK OFFICE

Commissioner for Patents
United States Patent and Trademark Office
P.O. Box 1450
Alexandria, VA 22313-1450
www.uspto.gov

APPLICATION NUMBER	FILING/RECEIPT DATE	FIRST NAMED APPLICANT	ATTORNEY DOCKET NUMBER
11/067,952	03/01/2005	Tetsuaki Suzuki	122964

OLIFF & BERRIDGE, PLC
P.O. BOX 19928
ALEXANDRIA VA 22320

DATE MAILED: May 4, 2007

DECISION GRANTING PETITION UNDER 37 CFR 1.138(d)
The declaration of express abandonment is recognized

This is in response to the petition under 37 CFR 1.138(d) filed April 11, 2007, requesting for a refund of any previously paid search fee and excess claims fee in the above-identified application.

The petition is granted.

The express abandonment is recognized. Any previously paid search fee and excess claims fee are hereby refunded.

Any inquiries concerning this decision should be directed to the Pre-Grant Publication Division at (703) 605-4283.

Barbara J. Debnam
Pre-Grant Publication Division

UNITED STATES PATENT AND TRADEMARK OFFICE

UNITED STATES DEPARTMENT OF COMMERCE
United States Patent and Trademark Office
Address: COMMISSIONER FOR PATENTS
P.O. Box 1450
Alexandria, Virginia 22313-1450
www.uspto.gov

ALCON
IP LEGAL, TB4-8
6201 SOUTH FREEWAY
FORT WORTH, TX 76134

Mail Date: 04/30/2010

Applicant	: Raphael Gordon	: DECISION ON REQUEST FOR
Patent Number	: 7645255	: RECALCULATION of PATENT
Issue Date	: 01/12/2010	: TERM ADJUSTMENT IN VIEW
Application No	: 11/067,959	: OF WYETH AND NOTICE OF INTENT TO
Filed	: 02/28/2005	: ISSUE CERTIFICATE OF CORRECTION
		:

The Request for Recalculation is **GRANTED** to the extent indicated.

The patent term adjustment has been determined to be **1355** days. The USPTO will *sua sponte* issue a certificate of correction reflecting the amount of PTA days determined by the recalculation.

Prior to the issuance of the certificate of correction, the USPTO will afford patentee an opportunity to be heard and request reconsideration. Accordingly, patentee has **one month or thirty (30) days**, whichever is longer, to file a request for reconsideration of this patent term adjustment calculation. See 35 U.S.C. 154(b)(3)(B)(ii) and 37 CFR 1.322(a)(4). No extensions of time will be granted under 37 CFR 1.136.

Patentee should use document code PET.OP if electronically filing a request for reconsideration of this patent term adjustment calculation. The patentee must also include the information required by 37 CFR 1.705(b)(2) and the fee required by 37 CFR 1.18(e). If patentee does not file a timely request for reconsideration of this patent term adjustment calculation including the information required by 37 CFR 1.705(b)(2) and the fee required by 37 CFR 1.18(e), the USPTO will issue a certificate of correction reflecting the PTA determination noted above.

Patentee should be aware that in order to preserve the right to review in the United States District Court for the District of Columbia of the USPTO patent term adjustment determination, patentee must ensure that he or she also take the steps required under 35 U.S.C. 154(b)(4)(A) in a timely manner. Nothing in the request for recalculation should be construed as providing an alternative time frame for commencing a civil action under 35 U.S.C. 154(b)(4)(A).

Any questions concerning this decision should be directed to the Office of Patent Legal Administration at 571-272-7702.

UNITED STATES PATENT AND TRADEMARK OFFICE

AUG 23 2007

Commissioner for Patents
United States Patent and Trademark Office
P.O. Box 1450
Alexandria, VA 22313-1450
www.uspto.gov

JONDLE & ASSOCIATES P.C.
858 HAPPY CANYON ROAD SUITE 230
CASTLE ROCK CO 80108

In re Application of	:
Jeffrey M. Tyler	:
Serial No.: 11/067,969	: PETITION DECISION
Filed: February 28, 2005	:
Attorney Docket No.: 1760-329	:

This is in response to the petition under 37 CFR § 1.59(b), filed August 8, 2007, to expunge information from the above identified application. This application has now been allowed.

Petitioner requests that the Reply to Request for Information Under 37 CFR 1.105, and all attachments thereto, submitted to the Patent Office on June 18, 2007, be expunged from the record. Petitioner states either: (A) that the information contains trade secret material, proprietary material and/or material that is subject to a protective order which has not been made public; or (B) that the information submitted was unintentionally submitted and the failure to obtain its return would cause irreparable harm to the party who submitted the information or to the party in interest on whose behalf the information was submitted, and the information has not otherwise been made public. The petition fee set forth in 37 CFR § 1.17(g) has been paid.

The reasons set forth in this petition establishes to the satisfaction of the Director that expungement of the information is appropriate. The file entries for those documents have been closed and as such the documents are no longer publicly available, which is the IFW equivalent to removal of a paper document from a paper file wrapper. Also, as stated in M.P.E.P. 724, upon allowance or other action closing prosecution in an application, petition may be made for return of Proprietary information. As this application has been allowed, the information is being returned to applicant.

Therefore, applicant's petition is GRANTED.

Should there be any questions about this decision please contact Marianne C. Seidel by letter addressed to Director, TC 1600, at the address listed above, or by telephone at 571-272-0584 or by facsimile sent to the general Office facsimile number, 703-872-9306.

Marianne C. Seidel
Quality Assurance Specialist/Program Manager
Technology Center 1600

UNITED STATES PATENT AND TRADEMARK OFFICE

Commissioner for Patents
United States Patent and Trademark Office
P.O. Box 1450
Alexandria, VA 22313-1450
www.uspto.gov

COPY MAILED

MAY 1 3 2005

OFFICE OF PETITIONS

HAMILTON & TERRILE, LLP
P.O. BOX 203518
AUSTIN, TX 78720

In re Application of	:	
Jones, at al.	:	
Application No. 11/067,973	:	ON PETITION
Filed: February 28, 2005	:	
Attorney Docket No. DC-04696A	:	

This is a decision on the papers styled, "Response to Notice of Incomplete Nonprovisional Application, filed April 19, 2005, which has been treated as a petition under 37 CFR 1.53, requesting that the above-identified application be accorded a filing date of February 28 2005, including eight (8) sheets of drawings.

The application was submitted on February 28, 2005. However, on April 14, 2005, the Office of Initial Patent Examination (OIPE) mailed a "Notice Of Incomplete Nonprovisional Application" (Notice) that stated the application had not been accorded a filing date, and that the application was deposited without drawings.

In response, on April 19, 2005, the instant petition was submitted. Petitioner argues that eight (8) sheets of drawings were filed on February 28, 2005. In support, the instant petition is accompanied by a copy of applicant's postcard receipt that acknowledges receipt of "8 sheet(s) of Drawings" on February 28, 2005. A review of the application file indicates the presence of zero (0) sheets of drawings filed on February 28, 2005. It is assumed that missing sheets of drawings were misplaced by the Office.

In view of the above, the petition is granted.

The petition fee has not been charged.

This application will be returned to OIPE for further processing with a filing date of February 28, 2005, using the eight (8) sheets of drawings, supplied on April 19, 2005.

Telephone inquiries regarding this decision should be directed to the undersigned at (571) 272-3228.

Edward J. Tannouse
Petitions Attorney
Office of Petitions/Patent
United States Patent and Trademark Office

UNITED STATES PATENT AND TRADEMARK OFFICE

COMMISSIONER FOR PATENTS
UNITED STATES PATENT AND TRADEMARK OFFICE
P.O. BOX 1450
ALEXANDRIA, VA 22313-1450
WWW.USPTO.GOV

Paper No. None

LEFFERT JAY & POLGLAZE, P.A.
P.O. BOX 581009
MINNEAPOLIS MN 55458-1009

COPY MAILED

MAR 12 2007

OFFICE OF PETITIONS

In re Application of
Aaron Yip
Application No. 11/067,974
Filed: February 28, 2005
Attorney Docket No.:
400.292US02
Title: NON-VOLATILE PROGRAMMABLE FUSE APPARATUS IN A FLASH MEMORY WITH PAIRS OF SUPERCELLS PROGRAMMED IN A COMPLEMENTARY FASHION

DECISION ON PETITION
UNDER 37 C.F.R. §1.181(A)

This is a decision on the petition filed on January 4, 2007, pursuant to 37 C.F.R. §1.181, requesting the withdrawal of a Notice of Abandonment.

On November 17, 2006, the Office of Patent Publications mailed a Notice of Abandonment, indicating that the present application went abandoned for failure to submit corrected drawings, as required in the Notice of Allowability.

It is noted that corrected drawings were submitted along with the Issue Fee on August 23, 2006.

On January 24, 2007, subsequent to the filing of this petition, the Office of Patent Publications mailed a communication, rescinding the notice of abandonment. As such, the request to withdraw the notice of abandonment is **DISMISSED AS MOOT**.

The Office of Patent Publication will be notified of this decision so that the present application can be processed into a patent.

Telephone inquiries regarding *this decision* should be directed to the undersigned at (571) 272-3225[1]. All other inquiries concerning the status of the application should be directed to the Office of Patent Publication at 571-272-4200.

Paul Shanoski
Senior Attorney
Office of Petitions
United States Patent and Trademark Office

1 Petitioner will note that all practice before the Office should be in writing, and the action of the Office will be based exclusively on the written record in the Office. See 37 C.F.R. §1.2. As such, Petitioner is reminded that no telephone discussion may be controlling or considered authority for any further action(s) of Petitioner.

UNITED STATES PATENT AND TRADEMARK OFFICE

Commissioner for Patents
United States Patent and Trademark Office
P.O. Box 1450
Alexandria, VA 22313-1450
www.uspto.gov

Townsend and Townsend and Crew, LLP
Two Embarcadero Center
Eighth Floor
San Francisco, CA 94111-3834

COPY MAILED

MAR 1 7 2008

OFFICE OF PETITIONS

In re Application of	:	
James F. Zucherman et al.	:	
Application No. 11/067,982	:	DECISION ON PETITION
Filed: February 28, 2005	:	TO WITHDRAW
Attorney Docket No. 5910-177	:	FROM RECORD
	:	

This is a decision on the Request to Withdraw as attorney or agent of record under 37 C.F.R. § 1.36(b), filed November 14, 2007.

The request is **NOT APPROVED** because it is moot.

A review of the file record indicates that the power of attorney to Townsend and Townsend and Crew, LLP has been revoked by the assignee of the patent application on December 19, 2007. Accordingly, the request to withdraw under 37 C.F.R. § 1.36(b) is moot.

All future communications from the Office will continue to be directed to the below-listed address until otherwise notified by applicant.

Telephone inquires concerning this decision should be directed to Terri Williams at 571-272-2991.

T. Williams

Terri Williams
Petitions Examiner
Office of Petitions

cc: **Coats & Bennett/Medtronics**
1400 Crescent Green
Suite 300
Cary, NC 27518

UNITED STATES PATENT AND TRADEMARK OFFICE

UNITED STATES DEPARTMENT OF COMMERCE
United States Patent and Trademark Office
Address: COMMISSIONER FOR PATENTS
P.O. Box 1450
Alexandria, Virginia 22313-1450
www.uspto.gov

INTERNATIONAL BUSINESS MACHINES CORP
IP LAW
555 BAILEY AVENUE , J46/G4
SAN JOSE, CA 95141

Mail Date: 04/20/2010

Applicant	: Paul Fredric Klein	: DECISION ON REQUEST FOR
Patent Number	: 7657737	: RECALCULATION of PATENT
Issue Date	: 02/02/2010	: TERM ADJUSTMENT IN VIEW
Appliction No	: 11/067,990	: OF WYETH AND NOTICE OF INTENT TO
Filed	: 02/28/2005	: ISSUE CERTIFICATE OF CORRECTION
		:

The Request for Recalculation is **GRANTED** to the extent indicated.

The patent term adjustment has been determined to be **1175** days. The USPTO will *sua sponte* issue a certificate of correction reflecting the amount of PTA days determined by the recalculation.

Prior to the issuance of the certificate of correction, the USPTO will afford patentee an opportunity to be heard and request reconsideration. Accordingly, patentee has **one month or thirty (30) days**, whichever is longer, to file a request for reconsideration of this patent term adjustment calculation. See 35 U.S.C. 154(b)(3)(B)(ii) and 37 CFR 1.322(a)(4). No extensions of time will be granted under 37 CFR 1.136.

Patentee should use document code PET.OP if electronically filing a request for reconsideration of this patent term adjustment calculation. The patentee must also include the information required by 37 CFR 1.705(b)(2) and the fee required by 37 CFR 1.18(e). If patentee does not file a timely request for reconsideration of this patent term adjustment calculation including the information required by 37 CFR 1.705(b)(2) and the fee required by 37 CFR 1.18(e), the USPTO will issue a certificate of correction reflecting the PTA determination noted above.

Patentee should be aware that in order to preserve the right to review in the United States District Court for the District of Columbia of the USPTO patent term adjustment determination, patentee must ensure that he or she also take the steps required under 35 U.S.C. 154(b)(4)(A) in a timely manner. Nothing in the request for recalculation should be construed as providing an alternative time frame for commencing a civil action under 35 U.S.C. 154(b)(4)(A).

Any questions concerning this decision should be directed to the Office of Patent Legal Administration at 571-272-7702.

UNITED STATES PATENT AND TRADEMARK OFFICE

Commissioner for Patents
United States Patent and Trademark Office
P.O. Box 1450
Alexandria, VA 22313-1450
www.uspto.gov

LADAS & PARRY LLP
26 WEST 61ST STREET
NEW YORK, N.Y. 10023

COPY MAILED

MAY 29 2008

OFFICE OF PETITIONS

In re Application of	:	
Ho Chich Chung	:	
Application No. 11/067,995	:	DECISION ON PETITION
Filed: February 28, 2005	:	
Attorney Docket No. 79587-241117	:	

This is a decision on the petition, filed February 15, 2008, which is being treated as a petition under 37 CFR 1.181 (no fee) requesting withdrawal of the holding of abandonment in the above-identified application.

The petition is **GRANTED**.

This application was held abandoned for failure to reply to the non-final Office action mailed July 5, 2006, which set a three (3) month shortened statutory period for reply. A Notice of Abandonment was mailed on January 25, 2007.

Petitioner asserts that the Office action dated July 5, 2006 was not received.

A review of the written record indicates an irregularity in the mailing of the Office action of July 5, 2006. In this regard, the Office received a change of address on July 11, 2005, prior to the mailing of the Office action of July 5, 2006. Office records were not updated to reflect this new change of address. Accordingly, as the Office action was mailed to an incorrect address, the Notice of Abandonment mailed January 25, 2007 is hereby vacated and the holding of abandonment withdrawn.

This application is being referred to the Technology Center technical support staff of Art Unit 3732 for remailing the Office action of July 5, 2006 and resetting the period for reply.

David Bucci
Petitions Examiner
Office of Petitions

UNITED STATES PATENT AND TRADEMARK OFFICE

Commissioner for Patents
United States Patent and Trademark Office
P.O. Box 1450
Alexandria, VA 22313-1450
www.uspto.gov

JONDLE & ASSOCIATES P.C.
858 HAPPY CANYON ROAD SUITE 230
CASTLE ROCK CO 80108

OCT 19 2007

In re Application of	:
William H. Eby	:
Serial No.: 11/067,998	: PETITION DECISION
Filed: February 28, 2005	:
Attorney Docket No.: 1421-194	:

This is in response to the petitions under 37 CFR § 1.59(b), filed June 14, 2007 and September 20, 2007, to expunge information from the above identified application. This application has now been allowed.

Petitioner requests that the Reply to Request for Information Under 37 CFR 1.105, and all attachments thereto, submitted to the Patent Office on June 14, 2007, be expunged from the record. Petitioner states either: (A) that the information contains trade secret material, proprietary material and/or material that is subject to a protective order which has not been made public; or (B) that the information submitted was unintentionally submitted and the failure to obtain its return would cause irreparable harm to the party who submitted the information or to the party in interest on whose behalf the information was submitted, and the information has not otherwise been made public. The petition fee set forth in 37 CFR § 1.17(g) has been paid.

The reasons set forth in this petition establishes to the satisfaction of the Director that expungement of the information is appropriate. The file entries for those documents have been closed and as such the documents are no longer publicly available, which is the IFW equivalent to removal of a paper document from a paper file wrapper. Also, as stated in M.P.E.P. 724, upon allowance or other action closing prosecution in an application, petition may be made for return of Proprietary information. As this application has been allowed, the information is being returned to applicant.

Therefore, applicant's petition is GRANTED.

Should there be any questions about this decision please contact Marianne C. Seidel by letter addressed to Director, TC 1600, at the address listed above, or by telephone at 571-272-0584 or by facsimile sent to the general Office facsimile number, 703-872-9306.

Marianne C. Seidel
Quality Assurance Specialist/Program Manager
Technology Center 1600

UNITED STATES PATENT AND TRADEMARK OFFICE

UNITED STATES DEPARTMENT OF COMMERCE
United States Patent and Trademark Office
Address: COMMISSIONER FOR PATENTS
P.O. Box 1450
Alexandria, Virginia 22313-1450
www.uspto.gov

WILLIAMS, MORGAN & AMERSON
10333 RICHMOND, SUITE 1100
HOUSTON, TX 77042

Mail Date: 04/21/2010

Applicant	: Seung-Jae Han	: DECISION ON REQUEST FOR
Patent Number	: 7577121	: RECALCULATION of PATENT
Issue Date	: 08/18/2009	: TERM ADJUSTMENT IN VIEW
Appliction No	: 11/068,002	: OF WYETH AND NOTICE OF INTENT TO
Filed	: 02/28/2005	: ISSUE CERTIFICATE OF CORRECTION
		:

The Request for Recalculation is **GRANTED** to the extent indicated.

The patent term adjustment has been determined to be **512** days. The USPTO will *sua sponte* issue a certificate of correction reflecting the amount of PTA days determined by the recalculation.

Prior to the issuance of the certificate of correction, the USPTO will afford patentee an opportunity to be heard and request reconsideration. Accordingly, patentee has **one month or thirty (30) days**, whichever is longer, to file a request for reconsideration of this patent term adjustment calculation. See 35 U.S.C. 154(b)(3)(B)(ii) and 37 CFR 1.322(a)(4). No extensions of time will be granted under 37 CFR 1.136.

Patentee should use document code PET.OP if electronically filing a request for reconsideration of this patent term adjustment calculation. The patentee must also include the information required by 37 CFR 1.705(b)(2) and the fee required by 37 CFR 1.18(e). If patentee does not file a timely request for reconsideration of this patent term adjustment calculation including the information required by 37 CFR 1.705(b)(2) and the fee required by 37 CFR 1.18(e), the USPTO will issue a certificate of correction reflecting the PTA determination noted above.

Patentee should be aware that in order to preserve the right to review in the United States District Court for the District of Columbia of the USPTO patent term adjustment determination, patentee must ensure that he or she also take the steps required under 35 U.S.C. 154(b)(4)(A) in a timely manner. Nothing in the request for recalculation should be construed as providing an alternative time frame for commencing a civil action under 35 U.S.C. 154(b)(4)(A).

Any questions concerning this decision should be directed to the Office of Patent Legal Administration at 571-272-7702.

UNITED STATES PATENT AND TRADEMARK OFFICE

Commissioner for Patents
United States Patent and Trademark Office
P.O. Box 1450
Alexandria, VA 22313-1450
www.uspto.gov

JONDLE & ASSOCIATES P.C.
858 HAPPY CANYON ROAD SUITE 230
CASTLE ROCK CO 80108

In re Application of	:
William H. Eby	:
Serial No.: 11/068,017	: PETITION DECISION
Filed: February 28, 2005	:
Attorney Docket No.: 1421-193	:

This is in response to the petition under 37 CFR § 1.59(b), filed June 14, 2007, to expunge information from the above identified application. This application has now been allowed.

Petitioner requests that the Reply to Request for Information Under 37 CFR 1.105, and all attachments thereto, submitted to the Patent Office on June 14, 2007, be expunged from the record. Petitioner states either: (A) that the information contains trade secret material, proprietary material and/or material that is subject to a protective order which has not been made public; or (B) that the information submitted was unintentionally submitted and the failure to obtain its return would cause irreparable harm to the party who submitted the information or to the party in interest on whose behalf the information was submitted, and the information has not otherwise been made public. The petition fee set forth in 37 CFR § 1.17(g) has been paid.

The reasons set forth in this petition establishes to the satisfaction of the Director that expungement of the information is appropriate. The file entries for those documents have been closed and as such the documents are no longer publicly available, which is the IFW equivalent to removal of a paper document from a paper file wrapper. Also, as stated in M.P.E.P. 724, upon allowance or other action closing prosecution in an application, petition may be made for return of Proprietary information. As this application has been allowed, the information is being returned to applicant.

Therefore, applicant's petition is GRANTED.

Should there be any questions about this decision please contact Marianne C. Seidel by letter addressed to Director, TC 1600, at the address listed above, or by telephone at 571-272-0584 or by facsimile sent to the general Office facsimile number, 703-872-9306.

Marianne C. Seidel
Quality Assurance Specialist/Program Manager
Technology Center 1600

UNITED STATES PATENT AND TRADEMARK OFFICE

Commissioner for Patents
United States Patent and Trademark Office
P.O. Box 1450
Alexandria, VA 22313-1450
www.uspto.gov

Mark J. Pandiscio
Pandiscio & Pandiscio, P.C.
470 Totten Pond Road
Waltham MA 02451-1914

COPY MAILED

NOV 25 2005

OFFICE OF PETITIONS

In re Application of	:	
Mahgerefteh et al.	:	
Application No. 11/068,032	:	DECISION REFUSING STATUS
Filed: February 28, 2005	:	UNDER 37 CFR 1.47(a)
Attorney Docket No. TAYE-31	:	

This is in response to the petition under 37 CFR 1.47(a), filed October 21, 2005 (certificate of mailing dated October 18, 2005). Applicants obtained an extension of time for response within the fourth month. Accordingly, the petition is timely filed.

The petition is dismissed.

Applicants are given TWO (2) MONTHS from the mailing date of this decision to reply, correcting the below-noted deficiencies. Any reply should be entitled "Request for Reconsideration of Petition Under 37 CFR 1.47(a)," and should address the deficiencies noted below, except that the reply may include an oath or declaration executed by the non-signing inventor. Failure to respond will result in abandonment of the application. Any extensions of time will be governed by 37 CFR 1.136(a). No additional petition fee is necessary for filing a request for reconsideration.

In the present petition, applicants submitted a document entitled, "Added Page to Combined Declaration and Power of Attorney for Signature by Joint Inventor(s) Who Refuse(s) to Sign or Cannot be Reached (37 CFR 1.47(a)," signed by joint inventor, Daniel Mahgerefteh on behalf of the non-signing inventor, Duncan Walker. Mr. Mahgerefteh asserted that Mr. Walker could not be found or reached. Mr. Mahgerefteh set forth Mr. Walker's last known address; however, he stated that he believed that Mr. Walker moved out of the United States. Additionally, Mr. Mahgerefteh asserted: "I am continuing to search for the exact location of Duncan Walker."

A grantable petition under 37 CFR 1.47(a) requires: (1) proof that the non-signing inventor cannot be reached or refuses to sign the oath or declaration after having been presented with the application papers (specification, claims and drawings); (2) an acceptable oath or declaration in compliance with 35 U.S.C. §§ 115 and 116; (3) the petition fee; and (4) a statement of the last known address of the non-signing inventor. Applicants lacks items (1) and (2) as set forth above.

As to item (1), applicants failed to show that the inventor cannot be reached after diligent efforts. Where inability to find or locate a named inventor is alleged, a statement of facts should be submitted that fully describes the exact facts which are relied on to establish that a diligent effort was made to locate the inventor. MPEP 409.03(d). The fact that a non-signing inventor is on vacation or out of town, and therefore, is temporarily unavailable to sign the declaration is not an acceptable reason for filing under 37 CFR 1.47. Id.

A person having firsthand knowledge of the facts must sign the statement of facts, where at all possible. If attempts to obtain a forwarding address and to locate the non-signing inventor by other means such as a telephone directory or the Internet continue to fail, then applicants will have provided the necessary proof required under 37 CFR 1.47 that the inventor cannot be reached. Id. Applicants should submit documentary evidence such as the results of a search of the Internet or the telephone directory for Mr. Walker's most current mailing address, email address or telephone number. It is important that the forthcoming communication contains statements of fact as opposed to conclusions.

As to item (2), applicants failed to submit an oath or declaration in compliance with 37 CFR 1.63. The declaration is not acceptable because the alteration to the citizenship of Bart Johnson was not **initialed and dated** as is required by 37 CFR 1.52(c).[1]

Section MPEP 605.04(a) of the Manual of Patent Examining Procedure states that it is "improper for anyone, including counsel, to alter, rewrite, or partly fill in any part of the application, including the oath or declaration, after execution of the oath or declaration

[1] "Any interlineation, erasure, cancellation or other alteration of the application papers...should be dated and initialed or signed by the applicant on the same sheet of paper." 37 CFR 1.52(c)(1).

by the applicant." Furthermore, the Office "will not consider whether noninitialed and/or nondated alterations were made before or after signing of the oath or declaration but will require a new oath or declaration." Id.

Pursuant to Section 603 of the Manual of Patent Examining Procedure, "Deficiencies or inaccuracies in an oath or declaration may be corrected by a supplemental oath or declaration." The supplemental oath or declaration must (1) identify the entire inventive entity, and (2) be signed by all the inventors when the correction relates to all the inventors or applicants (37 CFR 1.42, 1.43, or 1.47), **or by only those inventor(s) or applicants (37 CFR 1.42, 1.43, or 1.47) to whom the corrections relates.**[2] See 37 CFR 1.67(a)." Id.

Accordingly, applicants must submit a supplemental declaration in compliance with 37 CFR 1.63 and 1.67, identifying the entire inventive entity and signed by inventor Johnson.

The $200.00 petition fee will be charged to applicants' Deposit Account, as authorized.

Further correspondence with respect to this matter should be addressed as follows and **to the attention of Christina Tartera Donnell, Senior Petitions Attorney:**

By mail: Mail Stop Petition
Commissioner for Patents
P.O. Box 1450
Alexandria, VA 22313-1450

By FAX: (571) 273-8300
Attn: Office of Petitions

By hand: Customer Service Window
Randolph Building
401 Dulany Street
Alexandria, VA 22314

---

[2] "The following example[] illustrate[s] how certain deficiencies or inaccuracies in an oath or declaration may be corrected:

Example 1: An application was filed with a declaration under 37 CFR 1.63 executed by inventors A, B, and C. If it is later determined that the citizenship of inventor C was in error, a supplemental declaration identifying inventors A, B, and C may be signed by inventor C alone correcting C's citizenship." MPEP 603.

Telephone inquiries related to this decision may be directed to the undersigned at (571) 272-3211.

Christina Tartera Donnell

Christina Tartera Donnell
Senior Petitions Attorney
Office of Petitions

UNITED STATES PATENT AND TRADEMARK OFFICE

Commissioner for Patents
United States Patent and Trademark Office
P.O. Box 1450
Alexandria, VA 22313-1450
www.uspto.gov

Mark J. Pandiscio
Pandiscio & Pandiscio, P.C.
470 Totten Pond Road
Waltham MA 02451-1914

COPY MAILED

APR 14 2006

OFFICE OF PETITIONS

In re Application of	:	
Mahgerefteh et al.	:	DECISION NOTING JOINDER OF
Application No. 11/068,032	:	INVENTOR AND PETITION
Filed: February 28, 2005	:	UNDER 37 CFR 1.47(a) MOOT
Attorney Docket No. TAYE-31	:	

This is in response to the renewed petition under 37 CFR 1.47(a), filed on March 27, 2006.

In view of the joinder of the inventors, further consideration under 37 CFR 1.47(a) is not necessary. Accordingly, the petition is dismissed as involving a moot issue. This application does not have any Rule 1.47(a) status and no such status should appear on the file wrapper. This application does not need to be returned to the Office of Petitions for further consideration under 37 CFR 1.47(a).

As the issue is moot, applicant's request for an extension of time for response within the second month is unnecessary. Therefore, the $250.00 fee will be refunded to the Deposit Account.

This matter is being referred to Technology Center Art Unit 2622.

Telephone inquiries regarding this decision should be directed to the undersigned at (571) 272-3211.

Christina T. Donnell

Christina Tartera Donnell
Senior Petitions Attorney
Office of Petitions

UNITED STATES PATENT AND TRADEMARK OFFICE

Commissioner for Patents
United States Patent and Trademark Office
P.O. Box 1450
Alexandria, VA 22313-1450
www.uspto.gov

WILMERHALE/NEW YORK
399 PARK AVENUE
NEW YORK NY 10022

COPY MAILED

NOV 25 2009

OFFICE OF PETITIONS

In re Application of :
Wendkos et al. :
Application No. 11/068,033 :
Filed: February 28, 2005 :
Attorney Docket No. 289726.121 :
US2 :
Title: SYSTEMS AND METHODS FOR :
PRODUCING, MANAGING, :
DELIVERING, RETRIEVING, AND/OR :
TRACKING PERMISSION BASED :
COMMUNICATIONS :

ON APPLICATION FOR
PATENT TERM ADJUSTMENT

This is in response to the "APPLICATION FOR PATENT TERM ADJUSTMENT AND REQUEST FOR RECONSIDERATION OF THE PATENT TERM ADJUSTMENT UNDER 37 C.F.R. §§1.702-1.705" filed September 14, 2009. This petition is properly treated under 37 CFR 1.705(b). Applicants submit that the correct patent term adjustment to be indicated on the patent is one thousand two hundred thirty-five (1235) days, not eight hundred sixty-one (861) days as calculated by the Office as of the mailing of the initial determination of patent term adjustment. Applicants request this correction solely on the basis that the Office will take in excess of three years to issue this patent.

As the instant application for patent term adjustment requests reconsideration of the patent term adjustment as it relates to the Office's failure to issue the patent within 3 years of the filing date, the application for patent term adjustment under 37 CFR 1.705(b) is **DISMISSED as PREMATURE**.

Knowledge of the actual date the patent issues is required to calculate the amount, if any, of additional patent term patentee is entitled to for Office failure to issue the patent within 3 years. See § 1.702(b). (This is true even where a request for continued examination (RCE) was filed). The computer will not undertake the § 1.702(b) calculation until the actual date of issuance of the patent has been determined. Likewise, the

computer will not calculate any further Office delay under § 1.702(a)(4) or applicant delay under § 1.704(c)(10) until the actual date of issuance of the patent has been determined. As such, the Office cannot make a determination on the correctness of the patent term adjustment until the patent has issued.

Requesting reconsideration of the patent term adjustment to be indicated on the patent under 37 CFR 1.705(b) based on the initial determination of patent term adjustment and a projected issuance date of the patent (or even the filing date of the request for continued examination) is premature. Accordingly, it is appropriate to dismiss as premature such a request.

Rather than file an application for patent term adjustment under 37 CFR 1.705(b) contesting the 37 CFR 1.702(b) calculation at the time of the mailing of the notice of allowance, applicant is advised that they may wait until the time of the issuance of the patent and file a request for reconsideration of the patent term adjustment pursuant to 37 CFR 1.705(d). As the USPTO does not calculate the amount of time earned pursuant to 37 CFR 1.702(b) until the time of the issuance of the patent, the Office will consider any request for reconsideration of the patent term adjustment due to an error in the calculation of 37 CFR 1.702(b) to be timely if the request for reconsideration is filed within two months of the issuance of the patent. However, as to all other bases for contesting the initial determination of patent term adjustment received with the notice of allowance, applicant must timely file an application for patent term adjustment prior to the payment of the issue fee[1].

---

[1] For example, if applicant disputes both the calculation of patent term adjustment under 37 CFR 1.702(a)(1) for Office failure to mail a first Office action or notice of allowance not later than fourteen months after the date on which the application was filed and under 37 CFR 1.702(b) for Office failure to issue a patent within three years of the actual filing date of the application, then applicant must still timely file an application for patent term adjustment prior to the payment of the issue fee to contest the calculation of Office delay in issuing a first Office action or notice of allowance. See 37 CFR 1.705(b) and 35 U.S.C. 154(b)(3)(B). A dispute as to the calculation of the §1.702(a)(1) period raised on request for reconsideration of patent term adjustment under 37 CFR 1.705(d) will be dismissed as untimely filed.

The Office acknowledges submission of the $200.00 fee set forth in 37 CFR 1.18(e) for consideration of the application for patent term adjustment under 37 CFR 1.705(b).

Any request for reconsideration of the patent term adjustment indicated on the patent must be timely filed within 2 months after issuance pursuant to 37 CFR 1.705(d) and must include payment of the required fee under 37 CFR 1.18(e).

The Office of Data Management has been advised of this decision. This application is being referred to the Office of Data Management for issuance of the patent.

Telephone inquiries specific to this matter should be directed to Petitions Attorney Charlema Grant at (571) 272-3215.

/Kery A. Fries/

Kery Fries
Senior Legal Advisor Attorney
Office of Patent Legal Administration
Office of Deputy Commissioner
For Patent Examination Policy

UNITED STATES PATENT AND TRADEMARK OFFICE

UNITED STATES DEPARTMENT OF COMMERCE
United States Patent and Trademark Office
Address: COMMISSIONER FOR PATENTS
P.O. Box 1450
Alexandria, Virginia 22313-1450
www.uspto.gov

WILMERHALE/NEW YORK
399 PARK AVENUE
NEW YORK, NY 10022

Mail Date: 04/29/2010

Applicant	: Brad Wendkos	: DECISION ON REQUEST FOR
Patent Number	: 7640322	: RECALCULATION of PATENT
Issue Date	: 12/29/2009	: TERM ADJUSTMENT IN VIEW
Application No	: 11/068,033	: OF WYETH AND NOTICE OF INTENT TO
Filed	: 02/28/2005	: ISSUE CERTIFICATE OF CORRECTION
		:

The Request for Recalculation is **GRANTED** to the extent indicated.

The patent term adjustment has been determined to be **1234** days. The USPTO will *sua sponte* issue a certificate of correction reflecting the amount of PTA days determined by the recalculation.

Prior to the issuance of the certificate of correction, the USPTO will afford patentee an opportunity to be heard and request reconsideration. Accordingly, patentee has **one month or thirty (30) days**, whichever is longer, to file a request for reconsideration of this patent term adjustment calculation. See 35 U.S.C. 154(b)(3)(B)(ii) and 37 CFR 1.322(a)(4). No extensions of time will be granted under 37 CFR 1.136.

Patentee should use document code PET.OP if electronically filing a request for reconsideration of this patent term adjustment calculation. The patentee must also include the information required by 37 CFR 1.705(b)(2) and the fee required by 37 CFR 1.18(e). If patentee does not file a timely request for reconsideration of this patent term adjustment calculation including the information required by 37 CFR 1.705(b)(2) and the fee required by 37 CFR 1.18(e), the USPTO will issue a certificate of correction reflecting the PTA determination noted above.

Patentee should be aware that in order to preserve the right to review in the United States District Court for the District of Columbia of the USPTO patent term adjustment determination, patentee must ensure that he or she also take the steps required under 35 U.S.C. 154(b)(4)(A) in a timely manner. Nothing in the request for recalculation should be construed as providing an alternative time frame for commencing a civil action under 35 U.S.C. 154(b)(4)(A).

Any questions concerning this decision should be directed to the Office of Patent Legal Administration at 571-272-7702.

UNITED STATES PATENT AND TRADEMARK OFFICE

UNITED STATES DEPARTMENT OF COMMERCE
United States Patent and Trademark Office
Address: COMMISSIONER FOR PATENTS
P.O. Box 1450
Alexandria, Virginia 22313-1450
www.uspto.gov

DANN, DORFMAN, HERRELL & SKILLMAN
1601 MARKET STREET
SUITE 2400
PHILADELPHIA, PA 19103-2307

Mail Date: 05/07/2010

Applicant	: Kevin Kwong-Tai Chung	: DECISION ON REQUEST FOR
Patent Number	: 7635087	: RECALCULATION of PATENT
Issue Date	: 12/22/2009	: TERM ADJUSTMENT IN VIEW
Application No	: 11/068,034	: OF WYETH AND NOTICE OF INTENT TO
Filed	: 02/28/2005	: ISSUE CERTIFICATE OF CORRECTION
		:

The Request for Recalculation is **GRANTED** to the extent indicated.

The patent term adjustment has been determined to be **729** days. The USPTO will *sua sponte* issue a certificate of correction reflecting the amount of PTA days determined by the recalculation.

Prior to the issuance of the certificate of correction, the USPTO will afford patentee an opportunity to be heard and request reconsideration. Accordingly, patentee has **one month or thirty (30) days**, whichever is longer, to file a request for reconsideration of this patent term adjustment calculation. See 35 U.S.C. 154(b)(3)(B)(ii) and 37 CFR 1.322(a)(4). No extensions of time will be granted under 37 CFR 1.136.

Patentee should use document code PET.OP if electronically filing a request for reconsideration of this patent term adjustment calculation. The patentee must also include the information required by 37 CFR 1.705(b)(2) and the fee required by 37 CFR 1.18(e). If patentee does not file a timely request for reconsideration of this patent term adjustment calculation including the information required by 37 CFR 1.705(b)(2) and the fee required by 37 CFR 1.18(e), the USPTO will issue a certificate of correction reflecting the PTA determination noted above.

Patentee should be aware that in order to preserve the right to review in the United States District Court for the District of Columbia of the USPTO patent term adjustment determination, patentee must ensure that he or she also take the steps required under 35 U.S.C. 154(b)(4)(A) in a timely manner. Nothing in the request for recalculation should be construed as providing an alternative time frame for commencing a civil action under 35 U.S.C. 154(b)(4)(A).

Any questions concerning this decision should be directed to the Office of Patent Legal Administration at 571-272-7702.

UNITED STATES PATENT AND TRADEMARK OFFICE

JUN - 1 2007

Commissioner for Patents
United States Patent and Trademark Office
P.O. Box 1450
Alexandria, VA 22313-1450
www.uspto.gov

JONDLE & ASSOCIATES P.C.
858 HAPPY CANYON ROAD SUITE 230
CASTLE ROCK CO 80108

In re Application of :
Jeffrey M. Tyler
Serial No.: 11/068,071
Filed: February 28, 2005
Attorney Docket No.: 1760-331

: PETITION DECISION

This is in response to the petition under 37 CFR § 1.59(b), filed May 16, 2007, to expunge information from the above identified application. This application has not been allowed.

Petitioner requests that the Reply to Request for Information Under 37 CFR 1.105, and attachment thereto, submitted to the Patent Office on May 16, 2007, be expunged from the record. Petitioner states either: (A) that the information contains trade secret material, proprietary material and/or material that is subject to a protective order which has not been made public; or (B) that the information submitted was unintentionally submitted and the failure to obtain its return would cause irreparable harm to the party who submitted the information or to the party in interest on whose behalf the information was submitted, and the information has not otherwise been made public. The petition fee set forth in 37 CFR § 1.17(g) has been paid.

This is an examined application which is currently under non-final rejection. As such the information provided has been reviewed, in part, but proceedings in the application have not been terminated. As stated in M.P.E.P. 724, upon allowance or other action closing prosecution in an application, petition may be made for return of Proprietary information. The information cannot be expunged at this time.

The petition is **DISMISSED**. Applicant may resubmit the petition subsequent to a Notice of Allowability or *ex parte Quayle* action being mailed in the application. No additional petition fee will be required at that time.

Should there be any questions about this decision please contact Marianne C. Seidel by letter addressed to Director, TC 1600, at the address listed above, or by telephone at 571-272-0584 or by facsimile sent to the general Office facsimile number, 703-872-9306.

Marianne C. Seidel
Quality Assurance Specialist/Program Examiner
Technology Center 1600

UNITED STATES PATENT AND TRADEMARK OFFICE

JAN 30 2008

Commissioner for Patents
United States Patent and Trademark Office
P.O. Box 1450
Alexandria, VA 22313-1450
www.uspto.gov

JONDLE & ASSOCIATES P.C.
858 HAPPY CANYON ROAD SUITE 230
CASTLE ROCK CO 80108

In re Application of
Jeffrey M. Tyler
Serial No.: 11/068,071
Filed: February 28, 2005
Attorney Docket No.: 1760-331

: PETITION DECISION

This is in response to the renewed petition under 37 CFR § 1.59(b), filed January 18, 2008, to expunge information from the above identified application. This application has been allowed.

Petitioner requests that the Reply to Request for Information Under 37 CFR 1.105, and all attachments thereto, submitted to the Patent Office on May 16, 2007 be expunged from the record. Petitioner states either: (A) that the information contains trade secret material, proprietary material and/or material that is subject to a protective order which has not been made public; or (B) that the information submitted was unintentionally submitted and the failure to obtain its return would cause irreparable harm to the party who submitted the information or to the party in interest on whose behalf the information was submitted, and the information has not otherwise been made public. The petition fee set forth in 37 CFR § 1.17(g) has been paid.

The reasons set forth in this petition establishes to the satisfaction of the Director that expungement of the information is appropriate. The file entries for those documents have been closed and as such the documents are no longer publicly available, which is the IFW equivalent to removal of a paper document from a paper file wrapper. Also, as stated in M.P.E.P. 724, upon allowance or other action closing prosecution in an application, petition may be made for return of Proprietary information. As this application has been allowed, the information is being returned to applicant.

Therefore, applicant's petition is GRANTED.

Should there be any questions about this decision please contact Marianne C. Seidel by letter addressed to Director, TC 1600, at the address listed above, or by telephone at 571-272-0584 or by facsimile sent to the general Office facsimile number, 703-872-9306.

Marianne C. Seidel
Quality Assurance Specialist/Program Manager
Technology Center 1600

UNITED STATES PATENT AND TRADEMARK OFFICE

JUN 11 2007

Commissioner for Patents
United States Patent and Trademark Office
P.O. Box 1450
Alexandria, VA 22313-1450
www.uspto.gov

JONDLE & ASSOCIATES P.C.
858 HAPPY CANYON ROAD SUITE 230
CASTLE ROCK CO 80108

In re Application of :
Jeffrey M. Tyler
Serial No.: 11/068,072
Filed: February 28, 2005
Attorney Docket No.: 1760-330

: PETITION DECISION

This is in response to the petition under 37 CFR § 1.59(b), filed May 16, 2007, to expunge information from the above identified application. This application has not been allowed.

Petitioner requests that the Reply to Request for Information Under 37 CFR 1.105, and attachment thereto, submitted to the Patent Office on May 16, 2007, be expunged from the record. Petitioner states either: (A) that the information contains trade secret material, proprietary material and/or material that is subject to a protective order which has not been made public; or (B) that the information submitted was unintentionally submitted and the failure to obtain its return would cause irreparable harm to the party who submitted the information or to the party in interest on whose behalf the information was submitted, and the information has not otherwise been made public. The petition fee set forth in 37 CFR § 1.17(g) has been paid.

However, no such attachment has been and/or was received on May 16, 2007. Therefore, no information can be expunged at this time.

The petition is **DISMISSED**. Applicant may resubmit the petition and attachment and no additional petition fee will be required at that time.

Should there be any questions about this decision please contact Marianne C. Seidel by letter addressed to Director, TC 1600, at the address listed above, or by telephone at 571-272-0584 or by facsimile sent to the general Office facsimile number, 703-872-9306.

Marianne C. Seidel
Quality Assurance Specialist/Program Examiner
Technology Center 1600

UNITED STATES PATENT AND TRADEMARK OFFICE

Commissioner for Patents
United States Patent and Trademark Office
P.O. Box 1450
Alexandria, VA 22313-1450
www.uspto.gov

JAN 30 2008

JONDLE & ASSOCIATES P.C.
858 HAPPY CANYON ROAD SUITE 230
CASTLE ROCK CO 80108

In re Application of
Jeffrey M. Tyler
Serial No.: 11/068,072
Filed: February 28, 2005
Attorney Docket No.: 1760-330

: PETITION DECISION

This is in response to the renewed petition under 37 CFR § 1.59(b), filed January 18, 2008, to expunge information from the above identified application. This application has been allowed.

Petitioner requests that the Reply to Request for Information Under 37 CFR 1.105, and all attachments thereto, submitted to the Patent Office on May 16, 2007 be expunged from the record. Petitioner states either: (A) that the information contains trade secret material, proprietary material and/or material that is subject to a protective order which has not been made public; or (B) that the information submitted was unintentionally submitted and the failure to obtain its return would cause irreparable harm to the party who submitted the information or to the party in interest on whose behalf the information was submitted, and the information has not otherwise been made public. The petition fee set forth in 37 CFR § 1.17(g) has been paid.

The reasons set forth in this petition establishes to the satisfaction of the Director that expungement of the information is appropriate. The file entries for those documents have been closed and as such the documents are no longer publicly available, which is the IFW equivalent to removal of a paper document from a paper file wrapper. Also, as stated in M.P.E.P. 724, upon allowance or other action closing prosecution in an application, petition may be made for return of Proprietary information. As this application has been allowed, the information is being returned to applicant.

Therefore, applicant's petition is GRANTED.

Should there be any questions about this decision please contact Marianne C. Seidel by letter addressed to Director, TC 1600, at the address listed above, or by telephone at 571-272-0584 or by facsimile sent to the general Office facsimile number, 703-872-9306.

Marianne C. Seidel
Quality Assurance Specialist/Program Manager
Technology Center 1600

UNITED STATES PATENT AND TRADEMARK OFFICE

Commissioner for Patents
United States Patent and Trademark Office
P.O. Box 1450
Alexandria, VA 22313-1450
www.uspto.gov

COPY MAILED

AUG 0 8 2007

OFFICE OF PETITIONS

PATENT LAW OFFICE OF DAVID G. BECK
P. O. BOX 1146
MILL VALLEY CA 94942

In re Application of	:	
Ross Alan Tessien, et al.	:	
Application No. 11/068,080	:	DECISION ON PETITION
Filed: February 28, 2005	:	TO WITHDRAW
Attorney Docket No. IMP023	:	FROM RECORD
	:	

This is a decision on the Request to Withdraw as attorney or agent of record under 37 C.F.R. § 1.36(b) filed March 20, 2007.

The request is **APPROVED**.

A grantable request to withdraw as attorney/agent of record must be signed by every attorney/agent seeking to withdraw or contain a clear indication that one attorney is signing on behalf of another/others. A request to withdraw will not be approved unless at least 30 (thirty) days would remain between the date of approval and the later of the expiration date of a time to file a response or the expiration date of the maximum time period which can be extended under 37 C.F.R. § 1.136(a).

The request was signed by David G. Beck on behalf of himself.

All attorneys/agents associated with this application have been withdrawn.

Applicant is reminded that there is no attorney of record at this time.

The request to change the correspondence of record is not acceptable as the requested correspondence address is not that of: (1) the first named signing inventor; or (2) an intervening assignee of the entire interest under 37 C.F.R 3.71. All future communications from the Office will be directed to the first named signing inventor at the first copied address below until otherwise properly notified by the applicant.

In order to request or take action in a patent matter, the assignee must establish its ownership of the patent to the satisfaction of the Director. In this regard, a Statement under 37 CFR 3.73(b) must have either: (i) documentary evidence of a chain of title from the original owner to the assignee

(*e.g.*, copy of an executed assignment), and a statement affirming that the documentary evidence of the chain of title from the original owner to the assignee was or concurrently is being submitted for recordation pursuant to § 3.11; or (ii) a statement specifying where documentary evidence of a chain of title from the original owner to the assignee is recorded in the assignment records of the Office (*e.g.*, reel and frame number).

There are no pending Office actions at the present time.

Telephone inquiries concerning this decision should be directed to undersigned at 571-272-1642.

April M. Wise
Petitions Examiner
Office of Petitions

cc: ROSS ALAN TESSIEN
11482 TOWER HILL ROAD
NEVADA CITY, CA 95959

cc: ROSS TESSIEN
C/O IMPULSE DEVICES, INC.
13366 GRASS VALLEY AVENUE
UNIT H
GRASS VALLEY, CA 95945

UNITED STATES PATENT AND TRADEMARK OFFICE

UNITED STATES DEPARTMENT OF COMMERCE
United States Patent and Trademark Office
Address: COMMISSIONER FOR PATENTS
P.O. Box 1450
Alexandria, Virginia 22313-1450
www.uspto.gov

APPLICATION NUMBER	FILING OR 371 (c) DATE	FIRST NAMED APPLICANT	ATTY. DOCKET NO./TITLE
11/068,080	02/28/2005	Ross Alan Tessien	IMP023

CONFIRMATION NO. 8444

OC000000025201695

45147
PATENT LAW OFFICE OF DAVID G. BECK
P. O. BOX 1146
MILL VALLEY, CA 94942

Date Mailed: 08/06/2007

NOTICE REGARDING CHANGE OF POWER OF ATTORNEY

This is in response to the Power of Attorney filed 03/20/2007.

- The withdrawal as attorney in this application has been accepted. Future correspondence will be mailed to the new address of record. 37 CFR 1.33.

Office of Initial Patent Examination (571) 272-4000, or 1-800-PTO-9199
FORMER ATTORNEY/AGENT COPY

UNITED STATES PATENT AND TRADEMARK OFFICE

COMMISSIONER FOR PATENTS
UNITED STATES PATENT AND TRADEMARK OFFICE
P.O. BOX 1450
ALEXANDRIA, VA 22313-1450
www.uspto.gov

DAVID M. HILL
WARD & OLIVO
708 THIRD AVENUE
NEW YORK, NY 10017

COPY MAILED

AUG 1 0 2005

OFFICE OF PETITIONS

In re Application of :
Fred M. Valerino, Sr. :
Application No. 11/068,084 :
Filed: February 24, 2005 :
For: AUTOMATIC EMPTY CARRIER :
STORAGE, RETRIEVAL AND :
DISTRIBUTION SYSTEM :

This is a decision on the Petition to Correct Filing Date, filed July 28, 2005. The petition is properly treated under 37 CFR 1.10(c).

This Petition is hereby **granted**.

Petitioner alleges that the application was deposited in Express Mail service on February 24, 2005. In support of this assertion, the petition is accompanied by a copy of Express Mail label No. ET547828059US. A review of the Express Mail label, No. ET547828059US, reveals that the "Date In" indicated on the Express Mail label is February 24, 2005. The same Express Mail label number was placed on the original application papers located in the official file.

In view of the above, the petition is **granted**. No fee has been charged and none is due.

The application is being referred to the Office of Initial Patent Examination for correction of the filing date to February 24, 2005.

Telephone inquiries concerning this matter should be directed to Petitions Attorney Derek L. Woods at (571) 272-3232.

Derek L. Woods
Attorney
Office of Petitions

UNITED STATES PATENT AND TRADEMARK OFFICE

Commissioner for Patents
United States Patent and Trademark Office
P.O. Box 1450
Alexandria, VA 22313-1450
www.uspto.gov

WARD & OLIVO
SUITE 300
382 SPRINGFIELD AVENUE
SUMMIT NJ 07901

COPY MAILED

MAR 2 0 2009

OFFICE OF PETITIONS

In re Application of Valerino, Fred M. Sr. Application No. 11/068,084 Filed: February 24, 2005 Attorney Docket No. 655-015a	: : : : :	ON PETITION

This is a decision on the petition under 37 C.F.R. § 1.137(b), filed November 14, 2008, to revive the above-identified application.

The petition is **GRANTED**.

The petition satisfies the requirements of 37 CFR 1.137(b) in that petitioner has supplied (1) the reply in the form of a Request for Continued Examination (RCE) and an Amendment, (2) the petition fee, and (3) a proper statement of unintentional delay.

A Correspondence Address was submitted on October 3, 2007. A courtesy copy of this decision is being mailed to the address given on the petition; however, the Office will mail all future correspondence solely to the address of record.

Telephone inquiries concerning this decision should be directed to the undersigned at (571) 272-3206.

This matter is being referred to Technology Center AU 3653 for processing of the Request for Continued Examination under 37 CFR 1.114 filed with the instant petition.

Liana Walsh
Petitions Examiner
Office of Petitions

cc:

DAVID M. HILL
380 MADISON AVENUE
NEW YORK, NY 10017

UNITED STATES PATENT AND TRADEMARK OFFICE

Commissioner for Patents
United States Patent and Trademark Office
P.O. Box 1450
Alexandria, VA 22313-1450
www.uspto.gov

MAY 26 2005

MORGAN, LEWIS & BOCKIUS LLP
1701 MARKET STREET
PHILADELPHIA PA 19103-2921

In re Application of	:	
Skurkovich, et al.	:	
Serial No.: 11/068,088	:	PETITION TO MAKE SPECIAL
Filed: February 28, 2005	:	
Attorney Docket No. 53663-5016	:	

This is in response to applicant's petition filed on February 28, 2005 to make the above-identified application special under the provisions 37 CFR 1,102(c), based on the age of applicant. No fee is required for this petition.

Applicant has satisfied the provisions set forth in M.P.E.P. 708.02, IV. Therefore the petition is **GRANTED**.

The application will be forwarded to the examiner for action on the merits commensurate with this decision.

Should there by any questions with regard to this letter please contact William Dixon, Jr. by letter addressed to the Director, Technology Center 1600, P.O. Box 1450, ALEXANDRIA, VA 22313-1450, or by telephone at 572-272-0519 or by facsimile transmission to the general Office facsimile number.

William Dixon, Jr.
Special Program Examiner
Technology Center 1600

UNITED STATES PATENT AND TRADEMARK OFFICE

Commissioner for Patents
United States Patent and Trademark Office
P.O. Box 1450
Alexandria, VA 22313-1450
www.uspto.gov

JONES DAY
222 EAST 41ST ST
NEW YORK, NY 10017

COPY MAILED

APR 27 2009

OFFICE OF PETITIONS

In re Application of

Martin D. WELLS, et al.
Application No. 11/068,102
Filed: February 27, 2005
Attorney Docket No. **507407-999002(11503-003-999)**

DECISION ON PETITION TO WITHDRAW FROM RECORD

This is a decision on the Request to Withdraw as attorney or agent of record under 37 C.F.R. § 1.36(b), filed January 15, 2009.

The request is **APPROVED**.

A grantable request to withdraw as attorney/agent of record must be signed by every attorney/agent seeking to withdraw or contain a clear indication that one attorney is signing on behalf of another/others.

The request was signed by Brett Lovejoy on behalf of all attorneys of record. All attorneys/agents associated have been withdrawn. Applicant is reminded that there is no attorney of record at this time.

All future communications from the Office will be directed to the assignee of the entire interest APPLIED METABOLITICS IT, LLC at the address below until otherwise properly notified by the applicant.

There is an outstanding non-final Office action mailed December 8, 2008 that requires a reply from the applicant.

Telephone inquiries concerning this decision should be directed to the undersigned at 571-272-7253.

/Monica A. Graves/
Petitions Examiner, Office of Petitions

cc: **PETER N. JACOBSON**
APPLIED METABOLITICS IT, LLC
114 WELLSFORD DRIVE, SUITE 200
GOSHEN, CT 06756

SPE RESPONSE FOR CERTIFICATE OF CORRECTION

Paper No.: X

DATE : October 01,2007

TO SPE OF : ART UNIT 2882

SUBJECT : Request for Certificate of Correction for Appl. No.: 11/068,123 Patent No.: 7195395 B2

A response is requested with respect to a request for a certificate of correction.

With respect to the change(s) requested to correct Office and/or Applicant's errors, should the patent read as shown in the certificate of correction attached herewith or the COCIN document(s), in IFW images for the above-identified patented application? No new matter should be introduced, nor should the scope or meaning of the claims be changed.

If the response is for an IFW, within **7** days, please complete and forward the response, to the employee (named below) via scanning into application images, using document code **COCX**.

DO NOT SENT TO ATTORNEY

If the response is for a paper file wrapper, please complete the response and forward the response with the paper file wrapper, to the employee (named below), within **7** days, to:

Certificates of Correction Branch (CofC)
South Tower - 9A22
Palm Location 7580

LAMONTE NEWSOME
Certificates of Correction Branch
703-308-9390 ext. 112

Thank You For Your Assistance

The request for issuing the above-identified correction(s) is hereby:
Note your decision on the appropriate box.

- [x] **Approved** — **All** changes apply.
- [ ] **Approved in Part** — Specify below which changes **do not** apply.
- [ ] **Denied** — State the reasons for denial below.

Comments: _____

EDWARD J. GLICK
SUPERVISORY PATENT EXAMINER
SPE

2882
Art Unit

UNITED STATES PATENT AND TRADEMARK OFFICE

UNITED STATES DEPARTMENT OF COMMERCE
United States Patent and Trademark Office
Address: COMMISSIONER FOR PATENTS
P.O. Box 1450
Alexandria, Virginia 22313-1450
www.uspto.gov

WALL & TONG, LLP
IBM CORPORATION
595 SHREWSBURY AVE
SUITE 100
SHREWSBURY, NJ 07702

Mail Date: 04/21/2010

Applicant	: Bugra Gedik	: DECISION ON REQUEST FOR
Patent Number	: 7610397	: RECALCULATION of PATENT
Issue Date	: 10/27/2009	: TERM ADJUSTMENT IN VIEW
Appliction No	: 11/068,137	: OF WYETH AND NOTICE OF INTENT TO
Filed	: 02/28/2005	: ISSUE CERTIFICATE OF CORRECTION
		:

The Request for Recalculation is **GRANTED** to the extent indicated.

The patent term adjustment has been determined to be **1276** days. The USPTO will *sua sponte* issue a certificate of correction reflecting the amount of PTA days determined by the recalculation.

Prior to the issuance of the certificate of correction, the USPTO will afford patentee an opportunity to be heard and request reconsideration. Accordingly, patentee has **one month or thirty (30) days**, whichever is longer, to file a request for reconsideration of this patent term adjustment calculation. See 35 U.S.C. 154(b)(3)(B)(ii) and 37 CFR 1.322(a)(4). No extensions of time will be granted under 37 CFR 1.136.

Patentee should use document code PET.OP if electronically filing a request for reconsideration of this patent term adjustment calculation. The patentee must also include the information required by 37 CFR 1.705(b)(2) and the fee required by 37 CFR 1.18(e). If patentee does not file a timely request for reconsideration of this patent term adjustment calculation including the information required by 37 CFR 1.705(b)(2) and the fee required by 37 CFR 1.18(e), the USPTO will issue a certificate of correction reflecting the PTA determination noted above.

Patentee should be aware that in order to preserve the right to review in the United States District Court for the District of Columbia of the USPTO patent term adjustment determination, patentee must ensure that he or she also take the steps required under 35 U.S.C. 154(b)(4)(A) in a timely manner. Nothing in the request for recalculation should be construed as providing an alternative time frame for commencing a civil action under 35 U.S.C. 154(b)(4)(A).

Any questions concerning this decision should be directed to the Office of Patent Legal Administration at 571-272-7702.

UNITED STATES PATENT AND TRADEMARK OFFICE

Commissioner for Patents
United States Patent and Trademark Office
P.O. Box 1450
Alexandria, VA 22313-1450
www.uspto.gov

THOMAS, KAYDEN, HORSTEMEYER &
RISLEY, LLP
600 GALLERIA PARKWAY, S.E.
STE 1500
ATLANTA GA 30339-5994

COPY MAILED

MAY 22 2008

OFFICE OF PETITIONS

In re Patent No. 7,241,648	:	
Issue Date: July 10, 2007	:	
Application No. 11/068,146	:	ON PETITION
Filed: February 28, 2005	:	
Attorney Docket No. 251704-1090	:	

This is a decision on the paper filed August 17, 2007, which is being treated as a request under 37 CFR 3.81(b)[1] to correct the name of the assignee on the front page of the above-identified patent by way of a Certificate of Correction.

The request is **GRANTED**.

Telephone inquiries concerning this decision may be directed to the undersigned at (571) 272-3208. Inquiries regarding the issuance of a certificate of correction should be directed to the Certificate of Correction Branch at (571) 272-4200.

The Certificates of Correction Branch will be notified of this decision granting the petition under 37 CFR 3.81(b) and directing issuance of the requested Certificate of Correction.

Karen Creasy

Karen Creasy
Petitions Examiner
Office of Petitions

---

[1] *See* MPEP 1309, subsection II; and Official Gazette of June 22, 2004.

UNITED STATES PATENT AND TRADEMARK OFFICE

Commissioner for Patents
United States Patent and Trademark Office
P.O. Box 1450
Alexandria, VA 22313-1450
www.uspto.gov

James E. Cole
Middleton Reutlinger
2500 Brown & Williamson Tower
401 S. 4th Street, Suite 2500
Louisville, KY 40202

MAILED

SEP 21 2005

Director's Office
Group 3700

In re Application of :
Koetter et al. :
Serial No. 11/068,154 : DECISION ON PETITION
Filed: February 28, 2005 : TO MAKE SPECIAL
For: HINGED DORSAL CARPAL TUNNEL BRACE

Applicant's petition, filed September 08, 2005, seeks to have this application made special pursuant to the Accelerated Examination Program. The petition is GRANTED.

The petition has been reviewed and is found to be in compliance with the requirements for special status as set forth in Section 708.02(VIII) of the Manual of Patent Examining Procedures (MPEP).

Applicant is advised that the examiner's search will be restricted to the subject matter encompassed by the claims. In the event that the application receives a first action rejection, applicant is encouraged to arrange for an interview with the examiner, and to provide the examiner with a working copy of any proposed amendment one working day prior to the interview. Any amendment filed in response to a first action rejection, which would require broadening of the field of search will be treated as an improper response.

PETITION GRANTED.

Richard A. Bertsch

Richard A. Bertsch, Director
Technology Center 3700
571-272-3750

rt/ 9/20/05

UNITED STATES PATENT AND TRADEMARK OFFICE

Commissioner for Patents
United States Patent and Trademark Office
P.O. Box 1450
Alexandria, VA 22313-1450
www.uspto.gov

APPLICATION NUMBER	FILING/RECEIPT DATE	FIRST NAMED APPLICANT	ATTORNEY DOCKET NUMBER
11/068,168	02/28/2005	Jeff M. Anderson	10010757-6

HEWLETT-PACKARD COMPANY
Intellectual Property Administration
P. O. Box 272400
Fort Collins CO 80527-2400

DATE MAILED: February 20, 2007

DECISION GRANTING PETITION UNDER 37 CFR 1.138(d)
The declaration of express abandonment is recognized

This is in response to the petition under 37 CFR 1.138(d) filed February 15, 2007, requesting for a refund of any previously paid search fee and excess claims fee in the above-identified application.

The petition is granted.

The express abandonment is recognized. Any previously paid search fee and excess claims fee are hereby refunded.

Any inquiries concerning this decision should be directed to the Pre-Grant Publication Division at (703) 605-4283.

Barbara J. Debnam
Pre-Grant Publication Division

UNITED STATES PATENT AND TRADEMARK OFFICE

Commissioner for Patents
United States Patent and Trademark Office
P.O. Box 1450
Alexandria, VA 22313-1450
www.uspto.gov

Paper No.

SCOTT P. ZIMMERMAN, PLLC
PO BOX 3822
CARY NC 27519

COPY MAILED

MAY 2 7 2008

OFFICE OF PETITIONS

In re Application of :
Charles Atchison et al. :
Application No. 11/068,176 :
Filed: February 28, 2005 : DECISION ON PETITION
Attorney Docket No. BS040101 : UNDER 37 C.F.R. § 1.181(A)
Title: DOCUMENT REPOSITORY :

This is a decision on the petition under 37 C.F.R. § 1.181(a) to withdraw the holding of abandonment, filed on March 27, 2008.

BACKGROUND

The above-identified application became abandoned for failure to submit the issue and publication fees in a timely manner in reply to the Notice of Allowance and Issue Fee Due, mailed November 28, 2007, which set a shortened statutory period for reply of three months. No extensions of time are permitted for transmitting issue and publication fees[1]. Accordingly, the above-identified application became abandoned on February 29, 2008. A Notice of Abandonment was mailed on March 25, 2008.

RELEVANT PORTION OF THE C.F.R.

37 C.F.R. § 1.8(b) sets forth, *in toto*:

> (b) In the event that correspondence is considered timely filed by being mailed or transmitted in accordance with paragraph (a) of this section, but not received in the U.S. Patent and Trademark Office after a reasonable amount of time has elapsed from the time of mailing or transmitting of the correspondence,

1 See MPEP § 710.02(e).

or after the application is held to be abandoned, or after the proceeding is dismissed, terminated, or decided with prejudice, the correspondence will be considered timely if the party who forwarded such correspondence:

(1) Informs the Office of the previous mailing or transmission of the correspondence promptly after becoming aware that the Office has no evidence of receipt of the correspondence;

(2) Supplies an additional copy of the previously mailed or transmitted correspondence and certificate; and

(3) Includes a statement which attests on a personal knowledge basis or to the satisfaction of the Director to the previous timely mailing or transmission. If the correspondence was sent by facsimile transmission, a copy of the sending unit's report confirming transmission may be used to support this statement.

ANALYSIS

With this petition, Petitioner has alleged that a response was timely filed. Petitioner has further included a copy of this response, and it is noted that it contains a "Certificate of Mailing or Transmission" dated December 10, 2007. Moreover, Petitioner has included a statement that attests on a personal knowledge basis to the previous timely submission.

Considering the facts and circumstances of the delay at issue, as set forth on petition, it is concluded that Petitioner has met his burden of establishing that a response was timely submitted, pursuant to 37 C.F.R. § 1.8.

Accordingly, the petition under 37 C.F.R. §1.181(a) is **GRANTED**. The holding of abandonment is **WITHDRAWN**.

Pursuant to this decision, the Office of Patent Publication will be notified of this decision so that the present application can be processed into a patent.

Petitioner may find it beneficial to view Private PAIR within a fortnight of the present decision to ensure that the withdrawal of the holding of abandonment has been acknowledged by the Technology Center in response to this decision. It is noted that all inquiries with regard to any failure of that change in status should be directed to the Technology Center where that change of status must be effected - **the Office of Petitions cannot effectuate a change of status**.

Telephone inquiries regarding *this decision* should be directed to the undersigned at (571) 272-3225[2]. All other inquiries

---

2 Petitioner will note that all practice before the Office should be in writing, and the action of the Office will be based exclusively on the written record in the Office. See 37 C.F.R. § 1.2. As such, Petitioner is

concerning the status of the application should be directed to the Office of Patent Publication at 571-272-4200.

/Paul Shanoski/
Paul Shanoski
Senior Attorney
Office of Petitions

---

reminded that no telephone discussion may be controlling or considered authority for any further action(s) of Petitioner.

UNITED STATES PATENT AND TRADEMARK OFFICE

Commissioner for Patents
United States Patent and Trademark Office
P.O. Box 1450
Alexandria, VA 22313-1450
www.uspto.gov

VALEO CLIMATE CONTROL CORP.
INTELLECTUAL PROPERTY DEPARTMENT
4100 NORTH ATLANTIC BOULEVARD
AUBURN HILLS, MI 48326

COPY MAILED

MAR 24 2006

OFFICE OF PETITIONS

In re Application of :
Philippe Vincent :
Application No. 11/068,183 :
Filed: February 28, 2005 :
Attorney Docket No. TFR0055 :

ON PETITION

This is a decision on the Request to Withdraw as attorney or agent of record under 37 C.F.R. § 1.36(b), filed January 5, 2006.

The request is **APPROVED**.

A grantable request to withdraw as attorney/agent of record must be signed by every attorney/agent seeking to withdraw or contain a clear indication that one attorney is signing on behalf of another/others. A request to withdraw will not be approved unless at least 30 (thirty) days would remain between the date of approval and the later of the expiration date of a time to file a response or the expiration date of the maximum time period which can be extended under 37 C.F.R. § 1.136(a).

Thomas P. Liniak has been withdrawn as attorney or agent of record; all other attorneys remain of record.

Telephone inquiries concerning this decision should be directed to Retta Williams at (571) 272-3229.

Denise Pothier
Petitions Examiner
Office of Petitions

UNITED STATES PATENT AND TRADEMARK OFFICE

UNITED STATES DEPARTMENT OF COMMERCE
United States Patent and Trademark Office
Address: COMMISSIONER FOR PATENTS
P.O. Box 1450
Alexandria, Virginia 22313-1450
www.uspto.gov

THE FARRELL LAW FIRM, LLP
290 Broadhollow Road
Suite 210E
Melville, NY 11747

Mail Date: 04/21/2010

Applicant	: Sun-Gi Lee	: DECISION ON REQUEST FOR
Patent Number	: 7606605	: RECALCULATION of PATENT
Issue Date	: 10/20/2009	: TERM ADJUSTMENT IN VIEW
Appliction No	: 11/068,187	: OF WYETH AND NOTICE OF INTENT TO
Filed	: 02/28/2005	: ISSUE CERTIFICATE OF CORRECTION
		:

The Request for Recalculation is **GRANTED** to the extent indicated.

The patent term adjustment has been determined to be **810** days. The USPTO will *sua sponte* issue a certificate of correction reflecting the amount of PTA days determined by the recalculation.

Prior to the issuance of the certificate of correction, the USPTO will afford patentee an opportunity to be heard and request reconsideration. Accordingly, patentee has **one month or thirty (30) days**, whichever is longer, to file a request for reconsideration of this patent term adjustment calculation. See 35 U.S.C. 154(b)(3)(B)(ii) and 37 CFR 1.322(a)(4). No extensions of time will be granted under 37 CFR 1.136.

Patentee should use document code PET.OP if electronically filing a request for reconsideration of this patent term adjustment calculation. The patentee must also include the information required by 37 CFR 1.705(b)(2) and the fee required by 37 CFR 1.18(e). If patentee does not file a timely request for reconsideration of this patent term adjustment calculation including the information required by 37 CFR 1.705(b)(2) and the fee required by 37 CFR 1.18(e), the USPTO will issue a certificate of correction reflecting the PTA determination noted above.

Patentee should be aware that in order to preserve the right to review in the United States District Court for the District of Columbia of the USPTO patent term adjustment determination, patentee must ensure that he or she also take the steps required under 35 U.S.C. 154(b)(4)(A) in a timely manner. Nothing in the request for recalculation should be construed as providing an alternative time frame for commencing a civil action under 35 U.S.C. 154(b)(4)(A).

Any questions concerning this decision should be directed to the Office of Patent Legal Administration at 571-272-7702.

UNITED STATES PATENT AND TRADEMARK OFFICE

UNITED STATES DEPARTMENT OF COMMERCE
United States Patent and Trademark Office
Address: COMMISSIONER FOR PATENTS
P.O. Box 1450
Alexandria, Virginia 22313-1450
www.uspto.gov

INTERNATIONAL BUSINESS MACHINES CORP
IP LAW
555 BAILEY AVENUE , J46/G4
SAN JOSE, CA 95141

Mail Date: 04/20/2010

Applicant	: Stephan Eberhard Ewen	: DECISION ON REQUEST FOR
Patent Number	: 7610264	: RECALCULATION of PATENT
Issue Date	: 10/27/2009	: TERM ADJUSTMENT IN VIEW
Appliction No	: 11/068,253	: OF WYETH AND NOTICE OF INTENT TO
Filed	: 02/28/2005	: ISSUE CERTIFICATE OF CORRECTION
		:

The Request for Recalculation is **GRANTED** to the extent indicated.

The patent term adjustment has been determined to be **500** days. The USPTO will *sua sponte* issue a certificate of correction reflecting the amount of PTA days determined by the recalculation.

Prior to the issuance of the certificate of correction, the USPTO will afford patentee an opportunity to be heard and request reconsideration. Accordingly, patentee has **one month or thirty (30) days**, whichever is longer, to file a request for reconsideration of this patent term adjustment calculation. See 35 U.S.C. 154(b)(3)(B)(ii) and 37 CFR 1.322(a)(4). No extensions of time will be granted under 37 CFR 1.136.

Patentee should use document code PET.OP if electronically filing a request for reconsideration of this patent term adjustment calculation. The patentee must also include the information required by 37 CFR 1.705(b)(2) and the fee required by 37 CFR 1.18(e). If patentee does not file a timely request for reconsideration of this patent term adjustment calculation including the information required by 37 CFR 1.705(b)(2) and the fee required by 37 CFR 1.18(e), the USPTO will issue a certificate of correction reflecting the PTA determination noted above.

Patentee should be aware that in order to preserve the right to review in the United States District Court for the District of Columbia of the USPTO patent term adjustment determination, patentee must ensure that he or she also take the steps required under 35 U.S.C. 154(b)(4)(A) in a timely manner. Nothing in the request for recalculation should be construed as providing an alternative time frame for commencing a civil action under 35 U.S.C. 154(b)(4)(A).

Any questions concerning this decision should be directed to the Office of Patent Legal Administration at 571-272-7702.

UNITED STATES PATENT AND TRADEMARK OFFICE

UNITED STATES DEPARTMENT OF COMMERCE
United States Patent and Trademark Office
Address: COMMISSIONER FOR PATENTS
P.O. Box 1450
Alexandria, Virginia 22313-1450
www.uspto.gov

SEAGATE TECHNOLOGY LLC
INTELLECTUAL PROPERTY DEPT./ MAIL STOP NRW-097
7801 COMPUTER AVENUE SOUTH
BLOOMINGTON, MN 55435

Mail Date: 04/21/2010

Applicant	: Victor B. Sapozhnikov	: DECISION ON REQUEST FOR
Patent Number	: 7570461	: RECALCULATION of PATENT
Issue Date	: 08/04/2009	: TERM ADJUSTMENT IN VIEW
Appliction No	: 11/068,261	: OF WYETH AND NOTICE OF INTENT TO
Filed	: 02/28/2005	: ISSUE CERTIFICATE OF CORRECTION
		:

The Request for Recalculation is **GRANTED** to the extent indicated.

The patent term adjustment has been determined to be **1055** days. The USPTO will *sua sponte* issue a certificate of correction reflecting the amount of PTA days determined by the recalculation.

Prior to the issuance of the certificate of correction, the USPTO will afford patentee an opportunity to be heard and request reconsideration. Accordingly, patentee has **one month or thirty (30) days**, whichever is longer, to file a request for reconsideration of this patent term adjustment calculation. See 35 U.S.C. 154(b)(3)(B)(ii) and 37 CFR 1.322(a)(4). No extensions of time will be granted under 37 CFR 1.136.

Patentee should use document code PET.OP if electronically filing a request for reconsideration of this patent term adjustment calculation. The patentee must also include the information required by 37 CFR 1.705(b)(2) and the fee required by 37 CFR 1.18(e). If patentee does not file a timely request for reconsideration of this patent term adjustment calculation including the information required by 37 CFR 1.705(b)(2) and the fee required by 37 CFR 1.18(e), the USPTO will issue a certificate of correction reflecting the PTA determination noted above.

Patentee should be aware that in order to preserve the right to review in the United States District Court for the District of Columbia of the USPTO patent term adjustment determination, patentee must ensure that he or she also take the steps required under 35 U.S.C. 154(b)(4)(A) in a timely manner. Nothing in the request for recalculation should be construed as providing an alternative time frame for commencing a civil action under 35 U.S.C. 154(b)(4)(A).

Any questions concerning this decision should be directed to the Office of Patent Legal Administration at 571-272-7702.

UNITED STATES PATENT AND TRADEMARK OFFICE

UNITED STATES DEPARTMENT OF COMMERCE
United States Patent and Trademark Office
Address: COMMISSIONER FOR PATENTS
P.O. Box 1450
Alexandria, Virginia 22313-1450
www.uspto.gov

IBM CORPORATION
INTELLECTUAL PROPERTY LAW
3605 HIGHWAY 52 NORTH
DEPT 917 / BLDG 006-1
ROCHESTER, MN 55901-7829

Mail Date: 04/21/2010

Applicant	: William T. Newport	: DECISION ON REQUEST FOR
Patent Number	: 7657536	: RECALCULATION of PATENT
Issue Date	: 02/02/2010	: TERM ADJUSTMENT IN VIEW
Appliction No	: 11/068,262	: OF WYETH AND NOTICE OF INTENT TO
Filed	: 02/28/2005	: ISSUE CERTIFICATE OF CORRECTION
		:

The Request for Recalculation is **GRANTED** to the extent indicated.

The patent term adjustment has been determined to be **1342** days. The USPTO will *sua sponte* issue a certificate of correction reflecting the amount of PTA days determined by the recalculation.

Prior to the issuance of the certificate of correction, the USPTO will afford patentee an opportunity to be heard and request reconsideration. Accordingly, patentee has **one month or thirty (30) days**, whichever is longer, to file a request for reconsideration of this patent term adjustment calculation. See 35 U.S.C. 154(b)(3)(B)(ii) and 37 CFR 1.322(a)(4). No extensions of time will be granted under 37 CFR 1.136.

Patentee should use document code PET.OP if electronically filing a request for reconsideration of this patent term adjustment calculation. The patentee must also include the information required by 37 CFR 1.705(b)(2) and the fee required by 37 CFR 1.18(e). If patentee does not file a timely request for reconsideration of this patent term adjustment calculation including the information required by 37 CFR 1.705(b)(2) and the fee required by 37 CFR 1.18(e), the USPTO will issue a certificate of correction reflecting the PTA determination noted above.

Patentee should be aware that in order to preserve the right to review in the United States District Court for the District of Columbia of the USPTO patent term adjustment determination, patentee must ensure that he or she also take the steps required under 35 U.S.C. 154(b)(4)(A) in a timely manner. Nothing in the request for recalculation should be construed as providing an alternative time frame for commencing a civil action under 35 U.S.C. 154(b)(4)(A).

Any questions concerning this decision should be directed to the Office of Patent Legal Administration at 571-272-7702.

RECEIVED
CENTRAL FAX CENTER
MAY 17 2007

Docket No.: F-8559

CERTIFICATION OF MAILING OR TRANSMISSION

I hereby certify that this correspondence is being deposited with the United States Postal Service with sufficient postage as first class mail in an envelope addressed to the Commissioner for Patents, P.O. Box 1450, Alexandria, VA 22313-1450 or facsimile transmitted to the U.S. Patent and Trademark Office on the date shown below.

Ralph Locher

May 17, 2007
Date

IN THE UNITED STATES PATENT AND TRADEMARK OFFICE

Applicant	:	Richard A. Gottlieb	Confirmation No.: 9829
Applic. No.	:	11/068,265	
Filed	:	February 28, 2005	
Title	:	Self-Patterning Decorative Coating Composition and Method for Applying the Coating Composition	
Art Unit	:	1762	
Examiner	:	Frederick John Parker	

PETITION TO MAKE SPECIAL BECAUSE OF APPLICANT'S AGE
(37 CFR § 1.102(c) and M.P.E.P. § 708.02 V)

Applicant hereby petitions to make this application special because applicant is over 65 years of age.

As a showing of this fact, accompanying this petition is a copy of applicant's driver license showing a date of birth of 13-AUG-1929.

No fee is required with this petition, in accordance with 37 CFR § 1.102(c).

Ralph E. Locher (41,947)

Date: May 17, 2007

Tel. No.: (954) 925-1100
Fax No.: (954) 925-1101
/bb

P.O. Box 2480, Hollywood, FL 33022
P.O. Address

JUN - 6 2007
PETITION GRANTED

William Krynski
Special Program Examiner
Technology Center 1700

UNITED STATES PATENT AND TRADEMARK OFFICE

Commissioner for Patents
United States Patent and Trademark Office
P.O. Box 1450
Alexandria, VA 22313-1450
www.uspto.gov

Lerner Greenberg Stemer LLP
P.O. Box 2480
Hollywood, FL 33022-2480

COPY MAILED
SEP 29 2008

In re Application of	:	
Richard A. Gottlieb	:	
Application No. 11/068,265	:	DECISION ON PETITION
Filed: February 28, 2005	:	TO WITHDRAW
Attorney Docket No. F-8559	:	FROM RECORD
	:	

This is a decision on the Request to Withdraw as attorney or agent of record under 37 C.F.R. § 1.36(b), filed September 8, 2008.

The request is **NOT APPROVED** because it is moot.

A review of the file record indicates that the power of attorney to Lerner Greenberg Stemer LLP has been revoked by the assignee of the patent application on September 17, 2008. Accordingly, the request to withdraw under 37 C.F.R. § 1.36(b) is moot.

All future communications from the Office will continue to be directed to the below-listed address until otherwise notified by applicant.

Telephone inquires concerning this decision should be directed to Terri Williams at 571-272-2991.

Terri Williams
Petitions Examiner
Office of Petitions

cc: **Akerman Senterfitt**
P.O. Box 3188
West Palm Beach, FL 33402-3188

UNITED STATES PATENT AND TRADEMARK OFFICE

Commissioner for Patents
United States Patent and Trademark Office
P.O. Box 1450
Alexandria, VA 22313-1450
www.uspto.gov
DIW Aug-05

LERNER AND GREENBERG, PA
P O BOX 2480
HOLLYWOOD FL 33022-2480

COPY MAILED

AUG 3 1 2005

OFFICE OF PETITIONS

In re Application of	:	
Gerhard Zuch	:	DECISION REFUSING STATUS
Application No. 11/068,266	:	UNDER 37 CFR 1.47(b)
Filed: 28 February, 2005	:	
Atty Docket No. TER-02P0017	:	

This is in response to the petition filed on 8 August, 2005, under 37 CFR 1.47(b).

The petition is **DISMISSED**.

Rule 47 applicant is given TWO MONTHS from the mailing date of this decision to reply, correcting the below-noted deficiencies. Any reply should be entitled "Request for Reconsideration of Petition Under 37 CFR 1.47(b)," and should only address the deficiencies noted below, except that the reply may include an oath or declaration executed by the non-signing inventor. **FAILURE TO RESPOND WILL RESULT IN ABANDONMENT OF THE APPLICATION.** Extensions of time may be obtained in accordance with 37 CFR 1.136(a).

The above-identified application was filed on 28 February, 2005, without an executed oath or declaration. Accordingly, on 5 May, 2005, Initial Patent Examination Division mailed a Notice to File Missing Parts of Nonprovisional Application requiring an oath or declaration and a surcharge for its late filing. A two (2) month period for reply was set.

In response, on 8 August, 2005 (certificate of mailing date 5 August, 2005), petitioner filed a one (1) month extension of time, the present petition, petition fee, and surcharge.

Petitioner asserts, via the declaration of Dr. Heinrich Ruhmann, that a copy of the application was sent to the non-signing

inventor, Gerhard Zuch, but that the non-signing inventor has not returned an executed oath or declaration.

A grantable petition under 37 CFR 1.47(b) requires:

(1) proof that the non-signing inventor cannot be reached or refuses to sign the oath or declaration after having been presented with the application papers (specification, claims and drawings);

(2) an acceptable oath or declaration in compliance with 35 U.S.C. §§ 115 and 116;

(3) the petition fee;

(4) a statement of the last known address of the non-signing inventor;

(5) proof of proprietary interest, and

(6) proof of irreparable damage.

The petition lacks items (2) and (5).

In regards to item (2), an oath or declaration in compliance with 37 CFR 1.63 must be supplied. The declaration must include the name, citizenship, residence, and mailing address of the non-signing inventor. If the inventor refuses to sign the declaration, the declaration must be signed by an officer of the corporation (chief executive officer, president, vice president, secretary, or treasurer) on behalf of and as agent for the non-signing inventor. The officer must identify his or her title in the declaration. If the declaration is not signed by an officer of the corporation, then proof of the authority of the person signing on behalf of the corporation must be submitted (See MPEP 409.03(b)).

The declaration is objected to because it has not been signed by an officer of the corporation. It is recommended that a new declaration containing a signature block for both the non-signing inventor and the corporate officer signing on behalf of the assignee be provided with a renewed petition. The signature block for the non-signing inventor should be left blank, and the corporate officer should sign a separate signature block.

In regard to item (5), petitioner has not shown sufficient proprietary interest in the subject matter to justify filing of the application under 37 CFR 1.47(b).[1] Petitioner may provide proof by showing a copy of the employment agreement between the non-signing inventor and the Rule 1.47(b) applicant (company); a copy of an assignment agreement showing that the invention

[1] MPEP 409.03(f).

disclosed in the application is assigned to the Rule 1.47(b) applicant, or a legal memorandum signed by an attorney familiar with the law of the jurisdiction stating that a court of competent jurisdiction would by the weight of authority in that jurisdiction award the title of the invention to the Rule 1.47(b) applicant.

Further correspondence with respect to this matter should be addressed as follows:

By mail: Mail Stop Petition
Commissioner for Patents
P.O. Box 1450
Alexandria, VA 22313-1450

By FAX: (571) 273-8300
Attn: Office of Petitions

By hand: Customer Service Window
Mail Stop Petition
Randolph Building
401 Dulany Street
Alexandria, VA 22134

Telephone inquiries related to this decision should be directed to the undersigned at (571) 272-3231.

D Wood

Douglas I. Wood
Senior Petitions Attorney
Office of Petitions

UNITED STATES PATENT AND TRADEMARK OFFICE

COMMISSIONER FOR PATENTS
UNITED STATES PATENT AND TRADEMARK OFFICE
P.O. BOX 1450
ALEXANDRIA, VA 22313-1450
www.uspto.gov
DIW Nov-05

LERNER AND GREENBERG, PA
P O BOX 2480
HOLLYWOOD FL 33022-2480

COPY MAILED

NOV 29 2005

OFFICE OF PETITIONS

In re Application of	:	
Gerhard Zuch	:	DECISION REFUSING STATUS
Application No. 11/068,266	:	UNDER 37 CFR 1.47(b)
Filed: 28 February, 2005	:	
Atty Docket No. TER-02P0017	:	

This is in response to the renewed petition filed on 2 November, 2005, under 37 CFR 1.47(b).

The petition is again **DISMISSED**.

Rule 47 applicant is given TWO MONTHS from the mailing date of this decision to reply, correcting the below-noted deficiencies. Any reply should be entitled "Request for Reconsideration of Petition Under 37 CFR 1.47(b)," and should only address the deficiencies noted below, except that the reply may include an oath or declaration executed by the non-signing inventor. **FAILURE TO RESPOND WILL RESULT IN ABANDONMENT OF THE APPLICATION.** Extensions of time may be obtained in accordance with 37 CFR 1.136(a).

The above-identified application was filed on 28 February, 2005, without an executed oath or declaration. Accordingly, on 5 May, 2005, Initial Patent Examination Division mailed a Notice to File Missing Parts of Nonprovisional Application requiring an oath or declaration and a surcharge for its late filing. A two (2) month period for reply was set.

In response, on 8 August, 2005 (certificate of mailing date 5 August, 2005), petitioner filed a one (1) month extension of time, a petition under 37 CFR 1.47(b), petition fee, and surcharge.

Petitioner asserts, via the declaration of Dr. Heinrich Ruhmann, that a copy of the application was sent to the non-signing

inventor, Gerhard Zuch, but that the non-signing inventor has not returned an executed oath or declaration.

On 31 August, 2005, the petition was dismissed for lack of a proper oath or declaration and proprietary interest.

On 2 November, 2005 (certificate of mailing date 31 October, 2005), the present request for reconsideration was filed, accompanied by a "Substitute Declaration and Power of Attorney" and an "Assignment".

A grantable petition under 37 CFR 1.47(b) requires:

(1) proof that the non-signing inventor cannot be reached or refuses to sign the oath or declaration after having been presented with the application papers (specification, claims and drawings);

(2) an acceptable oath or declaration in compliance with 35 U.S.C. §§ 115 and 116;

(3) the petition fee;

(4) a statement of the last known address of the non-signing inventor;

(5) proof of proprietary interest, and

(6) proof of irreparable damage.

The petition lacks items (2) and (5).

In regards to item (2), an oath or declaration in compliance with 37 CFR 1.63 must be supplied. The declaration must include the name, citizenship, residence, and mailing address of the non-signing inventor. If the inventor refuses to sign the declaration, the declaration must be signed by an officer of the corporation (chief executive officer, president, vice president, secretary, or treasurer) on behalf of and as agent for the non-signing inventor. The officer must identify his or her title in the declaration. If the declaration is not signed by an officer of the corporation, then proof of the authority of the person signing on behalf of the corporation must be submitted (See MPEP 409.03(b)).

The declaration is objected to for the following reasons: First, the declaration does not clearly state the residence, mailing address, or citizenship of non-signing inventor Zuch.[1] A statement of the inventor's citizenship is a statutory requirement and cannot be waived.[2] A new oath or declaration,

---

[1] MPEP 605.01.

[2] 35 U.S.C. § 115, MPEP 605.01.

containing the residence, mailing address, and citizenship of both inventors, signed by the signing inventor on behalf of himself and the non-signing inventor in compliance with 37 CFR 1.63 and 1.67 is required.

It is recommended that the new oath or declaration contain a signature block for the non-signing inventor listing the inventor's residence, mailing address, and citizenship. The signature block for the non-signing inventor should be left blank. A separate signature block for the individual signing on behalf of the Rule 47 applicant, should also be provided.

Additionally, it is unclear whether the individual(s) signing the Declaration on behalf of the putative assignee has authority to do so. The declaration must be signed by an officer of the corporation (chief executive officer, president, vice president, secretary, or treasurer) on behalf of and as agent for the non-signing inventors. The individual's whose name is illegible, is identified as Chief Counsel. The other individual's title has not been provided in English. If the declaration is not signed by an officer of the corporation, then proof of authority of the person signing on behalf of the corporation must be submitted.[3]

It is further noted that the declaration filed with the petition does not meet the requirements of 37 CFR 1.63 because it contains uninitialed/undated alterations.[4] Specifically, there are uninitialed/undated alterations in the signature block for the individual listed as Chief Counsel. A new oath or declaration free from uninitialed and/or undated alterations must be provided.

In regard to item (5), petitioner has not shown sufficient proprietary interest in the subject matter to justify filing of the application under 37 CFR 1.47(b).[5] Petitioner may provide proof by showing a copy of the employment agreement between the non-signing inventor and the Rule 1.47(b) applicant (company); a copy of an assignment agreement showing that the invention disclosed in the application is assigned to the Rule 1.47(b) applicant, or a legal memorandum signed by an attorney familiar with the law of the jurisdiction stating that a court of competent jurisdiction would by the weight of authority in that jurisdiction award the title of the invention to the Rule 1.47(b) applicant.

---

[3] MPEP 409.03(b).

[4] See 37 CFR 1.52(c).

[5] MPEP 409.03(f).

The document titled "assignment" filed with the present request for reconsideration is insufficient to show proprietary interest because it was not signed by the non-signing inventor (assignor). Rather, the document was signed on behalf of the non-signing inventor by representatives of the putative assignee. As the assignor obviously did not sign the document, the document is clearly not evidence of an assignment.

Further correspondence with respect to this matter should be addressed as follows:

By mail: Mail Stop Petition
Commissioner for Patents
P.O. Box 1450
Alexandria, VA 22313-1450

By FAX: (571) 273-8300
Attn: Office of Petitions

By hand: Customer Service Window
Mail Stop Petition
Randolph Building
401 Dulany Street
Alexandria, VA 22134

Telephone inquiries related to this decision should be directed to the undersigned at (571) 272-3231.

D Wood

Douglas I. Wood
Senior Petitions Attorney
Office of Petitions

UNITED STATES PATENT AND TRADEMARK OFFICE

Commissioner for Patents
United States Patent and Trademark Office
P.O. Box 1450
Alexandria, VA 22313-1450
www.uspto.gov
DIW Feb-06

LERNER AND GREENBERG, PA
P O BOX 2480
HOLLYWOOD FL 33022-2480

COPY MAILED

FEB 14 2006

OFFICE OF PETITIONS

In re Application of	:
Gerhard Zuch	: DECISION NOTING JOINDER OF
Application No. 11/068,266	: INVENTOR AND PETITION
Filed: 28 February, 2005	: UNDER 37 CFR 1.47(b) MOOT
Atty Docket No. TER-02P0017	:

Papers filed on 26 January, 2006, in response to the decision dismissing petition mailed on 29 November, 2005, included a Declaration signed by the previously non-signing inventor, Gerhard Zuch, in compliance with 37 CFR 1.63.

In view of the joinder of the inventor, further consideration under 37 CFR 1.47(b) is moot; this application does not have any rule 1.47(b) status and no such status should appear on the file wrapper. This application need not be returned to this office for any further consideration under 37 CFR 1.47(b).

It is noted that one (1) page of declaration stating "Page 1 of 2" was received, and that the inventor's residence, mailing address, and citizenship appear to have been omitted from the declaration. Petitioner should submit a new declaration as required by the examiner.

The application is being forwarded to Technology Center Art Unit 2833 for examination in due course.

Telephone inquiries related to this decision should be directed to the undersigned at (571) 272-3231.

D Wood

Douglas I. Wood
Senior Petitions Attorney
Office of Petitions

UNITED STATES PATENT AND TRADEMARK OFFICE

UNITED STATES DEPARTMENT OF COMMERCE
United States Patent and Trademark Office
Address: COMMISSIONER FOR PATENTS
P.O. Box 1450
Alexandria, Virginia 22313-1450
www.uspto.gov

KINNEY & LANGE, P.A.
312 SOUTH 3RD STREET
THE KINNEY & LANGE BUILDING
MINNEAPOLIS, MN 55415

Mail Date: 04/21/2010

Applicant	: Richard August Budde	: DECISION ON REQUEST FOR
Patent Number	: 7663841	: RECALCULATION of PATENT
Issue Date	: 02/16/2010	: TERM ADJUSTMENT IN VIEW
Appliction No	: 11/068,282	: OF WYETH AND NOTICE OF INTENT TO
Filed	: 02/28/2005	: ISSUE CERTIFICATE OF CORRECTION
		:

The Request for Recalculation is **GRANTED** to the extent indicated.

The patent term adjustment has been determined to be **556** days. The USPTO will *sua sponte* issue a certificate of correction reflecting the amount of PTA days determined by the recalculation.

Prior to the issuance of the certificate of correction, the USPTO will afford patentee an opportunity to be heard and request reconsideration. Accordingly, patentee has **one month or thirty (30) days**, whichever is longer, to file a request for reconsideration of this patent term adjustment calculation. See 35 U.S.C. 154(b)(3)(B)(ii) and 37 CFR 1.322(a)(4). No extensions of time will be granted under 37 CFR 1.136.

Patentee should use document code PET.OP if electronically filing a request for reconsideration of this patent term adjustment calculation. The patentee must also include the information required by 37 CFR 1.705(b)(2) and the fee required by 37 CFR 1.18(e). If patentee does not file a timely request for reconsideration of this patent term adjustment calculation including the information required by 37 CFR 1.705(b)(2) and the fee required by 37 CFR 1.18(e), the USPTO will issue a certificate of correction reflecting the PTA determination noted above.

Patentee should be aware that in order to preserve the right to review in the United States District Court for the District of Columbia of the USPTO patent term adjustment determination, patentee must ensure that he or she also take the steps required under 35 U.S.C. 154(b)(4)(A) in a timely manner. Nothing in the request for recalculation should be construed as providing an alternative time frame for commencing a civil action under 35 U.S.C. 154(b)(4)(A).

Any questions concerning this decision should be directed to the Office of Patent Legal Administration at 571-272-7702.

UNITED STATES PATENT AND TRADEMARK OFFICE

Commissioner for Patents
United States Patent and Trademark Office
P.O. Box 1450
Alexandria, VA 22313-1450
www.uspto.gov

YOUNG & BASILE, P.C.
3001 WEST BIG BEAVER ROAD, SUITE 624
TROY, MI 48084

COPY MAILED

MAR 3 1 2008

In re Application of	:	
SANGER, et al.	:	
Application No. 11/068,285	:	DECISION ON PETITION
Filed: February 28, 2005	:	TO WITHDRAW
Attorney Docket No. **VLL-100-B**	:	FROM RECORD

This is a decision on the Request to Withdraw as attorney or agent of record under 37 C.F.R. § 1.36(b), filed October 9, 2007.

The request is **NOT APPROVED.**

A grantable request to withdraw as attorney/agent of record must be signed by every attorney/agent seeking to withdraw or contain a clear indication that one attorney is signing on behalf of another/others. A request to withdraw will not be approved unless at least 30 (thirty) days would remain between the date of approval and the later of the expiration date of a time to file a response or the expiration date of the maximum time period which can be extended under 37 C.F.R. § 1.136(a).

The Office cannot approve the request at this time since the reasons provided do not meet any of the conditions under the mandatory or permissive categories enumerated in 37 CFR 10.40. Section 10.40 of Title 37 of the Code of Federal Regulation states, "[a] practitioner shall not withdraw from employment in a proceeding before the Office without permission from the Office[.]" More specifically, 37 CFR 10.40 states, "[i]f paragraph (b) of this section is not applicable, a practitioner may not request permission to withdraw in matter pending before the Office unless such request or such withdrawal is" for one the permissive reasons listed in 37 CFR 10.40(c). The reason set forth in the request, "we were requested by the assignee to withdraw and transfer our file to a new attorney", does not meet any of the conditions set forth in 37 CFR 10.40.

In order to request or take action in a patent matter, the assignee must establish its ownership of the patent to the satisfaction of the Director. In this regard, a Statement under 37 CFR 3.73(b) must have either: (i) documentary evidence of a chain of title from the original owner to the assignee (*e.g.*, copy of an executed assignment), and a statement affirming that the documentary evidence of the

chain of title from the original owner to the assignee was or concurrently is being submitted for recordation pursuant to § 3.11; or (ii) a statement specifying where documentary evidence of a chain of title from the original owner to the assignee is recorded in the assignment records of the Office (*e.g.*, reel and frame number).All future communications from the Office will continue to be directed to the above-listed address until otherwise notified by applicant.

Telephone inquiries concerning this decision should be directed to the undersigned at 571-272-7253.

Monica A. Graves
Petitions Examiner
Office of Petitions

cc: **JEREMY J. SANGER**
VENTECH, LLC
29769 ANTHONY DRIVE
WIXOM, MI 48393

UNITED STATES PATENT AND TRADEMARK OFFICE

Commissioner for Patents
United States Patent and Trademark Office
P.O. Box 1450
Alexandria, VA 22313-1450
www.uspto.gov

FLYNN THIEL BOUTELL & TANIS, P.C.
2026 RAMBLING ROAD
KALAMAZOO MI 49008-1631

Mailed June 13, 2006

In re Application of	:
Sonja Mackey et al	:
Serial No.: 11/068,287	: STATUS LETTER
Filed: February 28, 2005	:
Attorney Docket No.: 00374A	:

This is in response to applicants' attorneys' request, filed May 22, 2006, to withdraw from representation in the above identified application.

37 CFR 10.40 Withdrawal from employment.
(b) Mandatory withdrawal . A practitioner representing a client before the Office shall withdraw from employment if:
(1) The practitioner knows or it is obvious that the client is bringing a legal action, commencing a proceeding before the Office, conducting a defense, or asserting a position in litigation or any proceeding pending before the Office, or is otherwise having steps taken for the client, merely for the purpose of harassing or maliciously injuring any person;
(2) The practitioner knows or it is obvious that the practitioner's continued employment will result in violation of a Disciplinary Rule;
(3) The practitioner's mental or physical condition renders it unreasonably difficult for the practitioner to carry out the employment effectively; or
(4) The practitioner is discharged by the client.
(c) Permissive withdrawal. If paragraph (b) of this section is not applicable, a practitioner may not request permission to withdraw in matters pending before the Office unless such request or such withdrawal is because:
(1) The petitioner's client:
(i) Insists upon presenting a claim or defense that is not warranted under existing law and cannot be supported by good faith argument for an extension, modification, or reversal of existing law;
(ii) Personally seeks to pursue an illegal course of conduct;
(iii) Insists that the practitioner pursue a course of conduct that is illegal or that is prohibited under a Disciplinary Rule;
(iv) By other conduct renders it unreasonably difficult for the practitioner to carry out the employment effectively;
(v) Insists, in a matter not pending before a tribunal, that the practitioner engage in conduct that is contrary to the judgment and advice of the practitioner but not prohibited under the Disciplinary Rule; or
(vi) Has failed to pay one or more bills rendered by the practitioner for an unreasonable period of time or has failed to honor an agreement to pay a retainer in advance of the performance of legal services.
(2) The practitioner's continued employment is likely to result in a violation of a Disciplinary Rule;
(3) The practitioner's inability to work with co-counsel indicates that the best interests of the client likely will be served by withdrawal;
(4) The practitioner's mental or physical condition renders it difficult for the practitioner to carry out the employment effectively;
(5) The practitioner's client knowingly and freely assents to termination of the employment; or

(6) The practitioner believes in good faith, in a proceeding pending before the Office, that the Office will find the existence of other good cause for withdrawal.

Applicants' attorney has provided no reason for withdrawal, as required.

The request to withdraw is **DISMISSED**.

Should there be any questions with regard to this letter please contact William R. Dixon, Jr. by letter addressed to the Director, Technology Center 1600, PO BOX 1450, ALEXANDRIA, VA 22313-1450, or by telephone at 571-272-0519 or by facsimile transmission at Office facsimile number 571-273-8300.

William R. Dixon, Jr.
Special Program Examiner
Technology Center 1600

MAY 22 2006

PTO/SB/83 (01-06)
Approved for use through 12/31/2008. OMB 0651-0035
U.S. Patent and Trademark Office, U.S. DEPARTMENT OF COMMERCE
Under the Paperwork Reduction Act of 1995, no persons are required to respond to a collection of information unless it displays a valid OMB control number.

REQUEST FOR WITHDRAWAL AS ATTORNEY OR AGENT AND CHANGE OF CORRESPONDENCE ADDRESS

Application Number	11/068 287
Filing Date	February 28, 2005
First Named Inventor	Sonja MACKEY
Art Unit	1621
Examiner Name	Peter G. O'Sullivan
Attorney Docket Number	Pharmacia Case 00374A

To: Commissioner for Patents
P.O. Box 1450
Alexandria, VA 22313-1450

Please withdraw me as attorney or agent for the above identified patent application, and

- [ ] all the attorneys/agents of record.
- [x] the attorneys/agents (with registration numbers) listed on the attached paper(s), or
- [ ] the attorneys/agents associated with Customer Number [ ]

NOTE: This box can only be checked when the power of attorney of record in the application is to all the practitioners associated with a customer number.

The reasons for this request are:

NOT Approved
W R Dixon

CORRESPONDENCE ADDRESS

WILLIAM R. DIXON, JR.
SPECIAL PROGRAM EXAMINER

1. [ ] The correspondence address is NOT affected by this withdrawal.
2. [x] Change the correspondence address and direct all future correspondence to:

[x] The address associated with Customer Number: 25533

OR

[ ] Firm *or* Individual Name					
Address					
City		State		Zip	
Country					
Telephone		Email			

Signature	Sidney B. Williams Jr.		
Name	Sidney B. Williams, Jr.	Registration No.	24 949
Date	May 17, 2006	Telephone No.	(269) 381-1156

NOTE: Withdrawal is effective when approved rather than when received. Unless there are at least 30 days between approval of withdrawal and the expiration date of a time period for response or possible extension period, the request to withdraw is normally disapproved.

This collection of information is required by 37 CFR 1.36. The information is required to obtain or retain a benefit by the public which is to file (and by the USPTO to process) an application. Confidentiality is governed by 35 U.S.C. 122 and 37 CFR 1.11 and 1.14. This collection is estimated to take 12 minutes to complete, including gathering, preparing, and submitting the completed application form to the USPTO. Time will vary depending upon the individual case. Any comments on the amount of time you require to complete this form and/or suggestions for reducing this burden, should be sent to the Chief Information Officer, U.S. Patent and Trademark Office, U.S. Department of Commerce, P.O. Box 1450, Alexandria, VA 22313-1450. DO NOT SEND FEES OR COMPLETED FORMS TO THIS ADDRESS. SEND TO: **Commissioner for Patents, P.O. Box 1450, Alexandria, VA 22313-1450.**

If you need assistance in completing the form, call 1-800-PTO-9199 and select option 2.

U.S. Serial No. 11/068 287

OIPE
MAY 22 2006
PATENT & TRADEMARK OFFICE

ATTACHMENT TO REQUEST FOR WITHDRAWAL

Dale H. Thiel	Reg. No. 24,323
David G. Boutell	Reg. No. 25,072
Ronald J. Tanis	Reg. No. 22,724
Terryence F. Chapman	Reg. No. 32,549
Mark L. Maki	Reg. No. 36,589
Sidney B. Williams, Jr.	Reg. No. 24,949
Liane L. Churney	Reg. No. 40,694
Brian R. Tumm	Reg. No. 36,328
Steven R. Thiel	Reg. No. 53,685
Donald J. Wallace	Reg. No. 43,977

UNITED STATES PATENT AND TRADEMARK OFFICE

Commissioner for Patents
United States Patent and Trademark Office
P.O. Box 1450
Alexandria, VA 22313-1450
www.uspto.gov

LEE & HAYES, PLLC
601 W. RIVERSIDE AVENUE, SUITE 1400
SPOKANE, WA 99201

MAILED

NOV 23 2009

OFFICE OF PETITIONS

In re Application of	:	
David Del VAL, et *al.*	:	
Application No. 11/068,293	:	DECISION GRANTING PETITION
Filed: February 28, 2005	:	UNDER 37 CFR 1.313(c)(2)
Attorney Docket No. **MS1-0818USC2**	:	

This is a decision on the petition under 37 CFR 1.313(c)(2), filed November 19, 2009, to withdraw the above-identified application from issue after payment of the issue fee.

The petition is **GRANTED**.

The above-identified application is withdrawn from issue for consideration of a submission under 37 CFR 1.114 (request for continued examination). *See* 37 CFR 1.313(c)(2).

Petitioner is advised that the issue fee paid on November 4, 2009 cannot be refunded. If, however, this application is again allowed, petitioner may request that it be applied towards the issue fee required by the new Notice of Allowance.[1]

Telephone inquiries should be directed to the undersigned at (571) 272-7253.

This application is being referred to Technology Center AU 2443 for processing of the request for continued examination under 37 CFR 1.114 and for consideration of the concurrently filed information disclosure statement.

/Monica A. Graves/
Petitions Examiner, Office of Petitions

---

[1] *The request to apply the issue fee to the new Notice may be satisfied by completing and returning the new Part B – Fee(s) Transmittal Form (along with any balance due at the time of submission). Petitioner is advised that the Issue Fee Transmittal Form* ***must*** *be completed and timely submitted to avoid abandonment of the application.*

UNITED STATES PATENT AND TRADEMARK OFFICE

UNITED STATES DEPARTMENT OF COMMERCE
United States Patent and Trademark Office
Address: COMMISSIONER FOR PATENTS
P.O. Box 1450
Alexandria, Virginia 22313-1450
www.uspto.gov

ALCON
IP LEGAL, TB4-8
6201 SOUTH FREEWAY
FORT WORTH, TX 76134

Mail Date: 04/30/2010

Applicant	: Mikhail Boukhny	: DECISION ON REQUEST FOR
Patent Number	: 7625388	: RECALCULATION of PATENT
Issue Date	: 12/01/2009	: TERM ADJUSTMENT IN VIEW
Application No	: 11/068,301	: OF WYETH AND NOTICE OF INTENT TO
Filed	: 02/28/2005	: ISSUE CERTIFICATE OF CORRECTION
		:

The Request for Recalculation is **GRANTED** to the extent indicated.

The patent term adjustment has been determined to be **1282** days. The USPTO will *sua sponte* issue a certificate of correction reflecting the amount of PTA days determined by the recalculation.

Prior to the issuance of the certificate of correction, the USPTO will afford patentee an opportunity to be heard and request reconsideration. Accordingly, patentee has **one month or thirty (30) days**, whichever is longer, to file a request for reconsideration of this patent term adjustment calculation. See 35 U.S.C. 154(b)(3)(B)(ii) and 37 CFR 1.322(a)(4). No extensions of time will be granted under 37 CFR 1.136.

Patentee should use document code PET.OP if electronically filing a request for reconsideration of this patent term adjustment calculation. The patentee must also include the information required by 37 CFR 1.705(b)(2) and the fee required by 37 CFR 1.18(e). If patentee does not file a timely request for reconsideration of this patent term adjustment calculation including the information required by 37 CFR 1.705(b)(2) and the fee required by 37 CFR 1.18(e), the USPTO will issue a certificate of correction reflecting the PTA determination noted above.

Patentee should be aware that in order to preserve the right to review in the United States District Court for the District of Columbia of the USPTO patent term adjustment determination, patentee must ensure that he or she also take the steps required under 35 U.S.C. 154(b)(4)(A) in a timely manner. Nothing in the request for recalculation should be construed as providing an alternative time frame for commencing a civil action under 35 U.S.C. 154(b)(4)(A).

Any questions concerning this decision should be directed to the Office of Patent Legal Administration at 571-272-7702.

UNITED STATES PATENT AND TRADEMARK OFFICE

UNITED STATES DEPARTMENT OF COMMERCE
United States Patent and Trademark Office
Address: COMMISSIONER FOR PATENTS
P.O. Box 1450
Alexandria, Virginia 22313-1450
www.uspto.gov

DUFT BORNSEN & FISHMAN, LLP
1526 SPRUCE STREET
SUITE 302
BOULDER, CO 80302

Mail Date: 05/03/2010

Applicant	: Joan LaVerne Mitchell	: DECISION ON REQUEST FOR
Patent Number	: 7653674	: RECALCULATION of PATENT
Issue Date	: 01/26/2010	: TERM ADJUSTMENT IN VIEW
Application No	: 11/068,328	: OF WYETH AND NOTICE OF INTENT TO
Filed	: 02/28/2005	: ISSUE CERTIFICATE OF CORRECTION
		:

The Request for Recalculation is **GRANTED** to the extent indicated.

The patent term adjustment has been determined to be **1355** days. The USPTO will *sua sponte* issue a certificate of correction reflecting the amount of PTA days determined by the recalculation.

Prior to the issuance of the certificate of correction, the USPTO will afford patentee an opportunity to be heard and request reconsideration. Accordingly, patentee has **one month or thirty (30) days**, whichever is longer, to file a request for reconsideration of this patent term adjustment calculation. See 35 U.S.C. 154(b)(3)(B)(ii) and 37 CFR 1.322(a)(4). No extensions of time will be granted under 37 CFR 1.136.

Patentee should use document code PET.OP if electronically filing a request for reconsideration of this patent term adjustment calculation. The patentee must also include the information required by 37 CFR 1.705(b)(2) and the fee required by 37 CFR 1.18(e). If patentee does not file a timely request for reconsideration of this patent term adjustment calculation including the information required by 37 CFR 1.705(b)(2) and the fee required by 37 CFR 1.18(e), the USPTO will issue a certificate of correction reflecting the PTA determination noted above.

Patentee should be aware that in order to preserve the right to review in the United States District Court for the District of Columbia of the USPTO patent term adjustment determination, patentee must ensure that he or she also take the steps required under 35 U.S.C. 154(b)(4)(A) in a timely manner. Nothing in the request for recalculation should be construed as providing an alternative time frame for commencing a civil action under 35 U.S.C. 154(b)(4)(A).

Any questions concerning this decision should be directed to the Office of Patent Legal Administration at 571-272-7702.

UNITED STATES PATENT AND TRADEMARK OFFICE

SEP 24 2004

Commissioner for Patents
United States Patent and Trademark Office
P.O. Box 1450
Alexandria, VA 22313-1450
www.uspto.gov

KILLWORTH GOTTMAN HAGAN & SCHAEFF LLP
ONE DAYTON CENTRE, SUITE 500
DAYTON, OH 45402-2023

COPY MAILED

SEP 20 2004

OFFICE OF PETITIONS

In re Application of	:	
Paul E. Burrows et al	:	
Application No. 09/966,163	:	DECISION ON PETITION
Filed: September 28, 2001	:	UNDER 37 CFR 1.78(a)(3)
Atty Dkt No. VIT 0012 PA/40926.13	:	

This is a decision on the petition under 37 CFR 1.78(a)(3), filed June 14, 2004, to accept an unintentionally delayed claim under 35 U.S.C. § 120 for the benefit of priority to prior-filed nonprovisional Application No. 09/427,138, as set forth in the amendment filed concurrently with the instant petition. This is also a decision on the concurrently filed petition under 37 CFR 1.47(a), which is being treated as a petition under 37 CFR 1.183 seeking waiver of the provisions of 37 CFR 1.67(a)(1), which states that a supplemental oath or declaration must be executed by all the named inventors.

The petition under 37 CF$ 1.78(a)(3) is **GRANTED**.

The petition under 37 CFR 1.183 is **GRANTED**.

Discussion of Petition under 37 CFR 1.78(a)(3)

A petition for acceptance of a claim for late priority under 37 CFR 1.78(a)(3) is only applicable to those applications filed on or after November 29, 2000. Further, the petition is appropriate only after the expiration of the period specified in 37 CFR 1.78(a)(2)(ii). In addition, the petition under 37 CFR 1.78(a)(3) must be accompanied by:

> **(1)** the reference required by 35 U.S.C. § 120 and 37 CFR 1.78(a)(2)(i) of the prior-filed application, unless previously submitted;
> **(2)** the surcharge set forth in § 1.17(t); and
> **(3)** a statement that the entire delay between the date the claim was due under 37 CFR 1.78(a)(2)(ii) and the date the claim was filed was unintentional. The Commissioner may require additional information

COPY

where there is a question whether the delay was unintentional.

The instant pending application was filed on September 28, 2001, and was pending at the time of filing of the instant petition. A reference to the above-noted, prior-filed nonprovisional application has been included in an amendment to the first sentence of the specification following the title, as required by 37 CFR 1.78(a)(2)(iii).

The instant nonprovisional application was filed after November 29, 2000, and the claim herein for the benefit of priority to the above-noted, prior-filed nonprovisional application is submitted after expiration of the period specified in 37 CFR 1.78(a)(2)(ii). Also, the reference to the above-noted, prior-filed nonprovisional application was submitted during the pendency of the instant nonprovisional application, for which the claim for benefit of priority is sought. *See* 35 U.S.C. § 120. Accordingly, having found that the instant petition for acceptance of an unintentionally delayed claim for the benefit of priority under 35 U.S.C. § 120 to the above-noted, prior-filed nonprovisional application satisfies the conditions of 37 CFR 1.78(a)(3), the petition is granted.

The granting of the petition to accept the delayed benefit claim to the above-noted, prior-filed application under 37 CFR 1.78(a)(3) should not be construed as meaning that the instant application is entitled to the benefit of the above-noted, prior-filed application. In order for the instant application to be entitled to the benefit of the above-noted, prior-filed application, all other requirements under 35 U.S.C. § 120 and 37 CFR 1.78(a)(1) and (a)(2) must be met. Similarly, the fact that the corrected Filing Receipt accompanying this decision on petition includes the above-noted, prior-filed application should not be construed as meaning that applicant is entitled to the claim for benefit of priority to the above-noted, prior-filed application noted thereon. Accordingly, the examiner will, in due course, consider this benefit claim and determine whether the instant application is entitled to the benefit of the earlier filing date.

A corrected Filing Receipt, which includes the priority claim to the above-noted, prior-filed nonprovisional application, accompanies this decision on petition.

Discussion of Petition under 37 CFR 1.183

MPEP § 603, provides that, "[w]hen an inventor who executed the original declaration is refusing or cannot be found to execute a required supplemental declaration, it is possible that the requirement may be suspended or waived in accordance with 37 CFR 1.183." Therefore, the submission of a petition under 37 CFR 1.47(a) is not the appropriate avenue of relief in this instance. Accordingly, the petition has been treated as a petition under 37 CFR 1.183 to waive the provisions of 37 CFR 1.67(a)(1) for a supplemental declaration executed by less than all the named inventors who originally executed a declaration.

Petitioner requests acceptance of the supplemental declaration filed concurrently with the instant petition without the signature of previously signing inventor J. Chris Pagano on the basis that inventor Pagano has left the employ of Vitex Systems, Inc., and cannot be located to execute the supplemental declaration. The petition is accompanied by a "Declaration of Patricia L. Prior" setting forth the efforts made to locate inventor Pagano. In view thereof, petitioner now requests that the supplemental declaration be accepted without the signature of inventor Pagano.

Under the circumstances recounted in the petition, justice would be served by suspending the requirements of 37 CFR 1.67(a)(1). Accordingly, the substitute declaration received June 14, 2004 and executed by the five signing inventors and without the signature of previously signing joint inventor Pagano is accepted as a proper oath under 37 CFR 1.67(a)(1).

Any inquiries concerning this decision may be directed to the undersigned at (703) 305-8680.

This matter is being referred to Technology Center Art Unit 1772 for processing of the RCE and amendment filed August 5, 2004, including consideration by the examiner of applicant's entitlement to claim benefit of priority under 35 U.S.C. § 120 to the above-noted, prior-filed nonprovisional application.

Frances Hicks

Frances Hicks
Petitions Examiner
Office of Petitions
Office of the Deputy Commissioner
for Patent Examination Policy

ATTACHMENT: Corrected Filing Receipt

UNITED STATES PATENT AND TRADEMARK OFFICE

Commissioner for Patents
United States Patent and Trademark Office
P.O. Box 1450
Alexandria, VA 22313-1450
www.uspto.gov

DINSMORE & SHOHL LLP
ONE DAYTON CENTRE, ONE SOUTH MAIN STREET
SUITE 1300
DAYTON, OH 45402-2023

COPY MAILED

JAN 30 2006

OFFICE OF PETITIONS

In re Application of :
Burrows, et al. :
Application No.: 11/068,356 : ON PETITION
Filing Date: February 28, 2005 :
Attorney Docket No. VIT 0012 VA :

This is a decision on the "Petition under 37 CFR 1.183 to Waive the Requirements of 37 CFR 1.67(a)(1) for a Supplemental Declaration by Other than All the Inventors" filed January 23, 2006.

The petition is **granted**.

Petitioner requests that the supplemental declaration be accepted without the signature of inventor Pagano, as inventor Pagano is unavailable. It is noted, that in this case, 37 CFR 1.67 requires that the supplemental declaration be signed by all named inventors, yet petitioner has demonstrated that inventor Pagano is unavailable. In such a case, Section 603 of the *Manual of Patent Examining Procedure* (MPEP) provides that:

> When an inventor who executed the original declaration is refusing or cannot be found to execute a required supplemental declaration, the requirement for that inventor to sign the supplemental declaration may be suspended or waived in accordance with 37 CFR 1.183. All available joint inventor(s) must sign the supplemental declaration on behalf of themselves, if appropriate, and on behalf of the nonsigning inventor. See MPEP § 409.03(a). If there are no joint inventor(s), then the party with sufficient proprietary interest must sign the supplemental declaration on behalf of the nonsigning inventor. See MPEP § 409.03(b).

Accordingly, the instant petition will be treated as petition under 37 CFR 1.183 to waive the requirement of 37 CFR 1.67 so as to accept the supplemental declaration filed January 23, 2006, without the signature of inventor Pagano. The petition is granted, the requirement of 37 CFR 1.67 that all named inventors execute the supplemental declaration is waived, and the supplemental declaration without the signature of inventor Pagano is acknowledged and made of record.

The application file will be forwarded to Technology Center 2800, GAU 2812 for treatment of the petition under 37 CFR 1.48 filed January 23, 2006 for further processing.

Telephone inquiries regarding this matter should be directed to the undersigned at (571) 272-3222.

Kenya A. McLaughlin
Petitions Attorney
Office of Petitions

UNITED STATES PATENT AND TRADEMARK OFFICE

COMMISSIONER FOR PATENTS
UNITED STATES PATENT AND TRADEMARK OFFICE
P.O. BOX 1450
ALEXANDRIA, VA 22313-1450
www.uspto.gov

BAKER & HOSTETLER LLP
WASHINGTON SQUARE, STE. 1100
1050 CONNECTICUT AVE., N.W.
WASHINGTON, DC 20036-5304

COPY MAILED
AUG 12 2005
OFFICE OF PETITIONS

In re Patent of :
Ames et al. :
Application No. 11/068,386 : DECISION
Deposited: March 1, 2005 : ON PETITION
Title of Invention: :
CABLE CLAMPING APPARATUS :
AND METHOD :

This is a decision on the Petition Under 37 CFR 1.53(e), filed July 10, 2005, requesting the application be accorded a filing date of March 1, 2005, including a specification.

The petition is **granted**.

Background

The application was deposited on March 1, 2005. On May 16, 2005, the Office of Initial Patent Examination (OIPE) mailed a the Office of Initial Patent Examination mailed a Notice of Incomplete Nonprovisional Application (hereinafter "Notice") stating that the application had NOT been accorded a filing date because the specification was missing.

The instant petition

Applicant files the instant petition and avers that a full and complete application, including, in relevant part, the specification, was filed in the Office on March 1, 2005. In support of this assertion, Applicant files a copy of "the date-stamped postcard and a copy of the Request form for Continuation Application Under 35 U.S.C. 111(A) noting, in line-item 1, that 'I hereby verify, to the best of my knowledge, that the enclosed copy of this prior application is a true copy of the above-identified prior application.'" *Petition* at p.1.

A review of the postcards reveals that it does not list a specification as having been filed with the application in this Office on March 1, 2005.

Analysis

The best evidence of what was filed on March 1, 2005, is applicant's postcard receipt. In this case, Applicant's postcard receipt fails to demonstrate that a specification was filed with the application.

The MPEP provides that

> If a new application is being filed, all parts of the application being submitted should be separately listed on the post card, e.g. the number of pages of specification (including written description, claims and abstract), number of claims, number of sheets of drawings, number of pages of oath/declaration, number of pages of cover sheet (provisional application).
>
> The postcard receipt will not serve as prima facie evidence of receipt of any item which is not adequately itemized on the postcard. For example, merely listing on the postcard 'a complete application' or 'patent application' will not serve as a proper receipt for each of the required components of an application (e.g., specification (including claims), drawings (if necessary), oath or declaration and the application filing fee[ ] or missing portions (e.g., pages, sheets of drawings) of an application if one of the components or portions of a component is found to be missing by the USPTO. Each separate component should be specifically and properly itemized on the postcard.

MPEP § 503

In this instance, Applicant's postcard receipt does not identify a specification as having been filed with the application.

Incorporation by reference

A review of the application papers filed on March 1, 2005, reveal that Applicant included a proper incorporation by reference to prior filed application serial number 10/405,083[1]. A review of prior application serial number 10/405,083 reveals that application serial number 10/405,083 includes a specification and at least one claim. Based upon the prior application including a claim, and the entire disclosure of application serial number 10/405,083 was incorporated by reference in the present application on March 1, 2005, it appears that a specification and at least one claim was present in the Office on March 1, 2005, albeit in the file of another application, i.e., application serial number 10/405,083. Therefore, on petition, the application may be accorded the requested filing date.

The petition is granted. The petition fee will not be refunded as the petition was not necessitated by Office error

A newly executed oath or declaration is not required under 37 CFR 1.51(b)(2) and 1.53(f) in a continuation or divisional application, provided that the specification and drawings filed in the continuation or divisional application contain no matter that would have been new matter in the prior application. See 37 CFR 1.63(d)(1).

The application is being returned to the Office of Initial Patent Examination for further processing with a **filing date of March 1, 2005**, and an indication that the application included a specification and at least one claim on filing.

Telephone inquiries concerning this decision should be directed to the undersigned at (571) 272-3232.

Derek L. Woods
Attorney
Office of Petitions

[1] See, 37 CFR 1.57(a)

SPE RESPONSE FOR CERTIFICATE OF CORRECTION

Paper No.:20080413

DATE : April 13, 2008

TO SPE OF : ART UNIT 3723

SUBJECT : Request for Certificate of Correction on Patent No.: 7,246,789

A response is requested with respect to the accompanying request for a certificate of correction.

Please complete this form and return with file, within **7** days to:
Certificates of Correction Branch - ST (South Tower) 9A22
Palm location **7590** - Tel. No. (703) 305-8309

With respect to the change(s) requested, correcting Office and/or Applicant's errors, should the patent read as shown in the certificate of correction? No new matter should be introduced, nor should the scope or meaning of the claims be changed.

Thank You For Your Assistance **Certificates of Correction Branch**

The request for issuing the above-identified correction(s) is hereby:

Note your decision on the appropriated box.

☒ **Approved** All changes apply.

☐ **Approved in Part** Specify below which changes **do not** apply.

☐ **Denied** State the reasons for denial below.

Comments:

These changes are ok.
/Lee Wilson/

SPE: /Joseph Hail/ Art Unit 3723

EFS-Web Receipt date: 12/13/2007

OIPE IAP10
DEC 13 2007
PATENT & TRADEMARK OFFICE

11/068386

11068386 - GAU: 3723

COPE

OK TO ENTER: /LW/

CERTIFICATE OF MAILING

APPLICANTS: Ames et al.

PATENT NO.: US 7,246,789 B2

ISSUE DATE: July 24, 2007

FOR: Cable Clamping Apparatus and Method

04/27/2008
OK TO ENTER: /LW/

I hereby certify that this correspondence,

TRANSMITTAL LETTER FOR CERTIFICATE OF CORRECTION (2 p.) (3 copies); FORM PTO/SB/44 (1 p.) (3 copies); ACKNOWLEDGEMENT POSTCARD

is being deposited with the United States Postal Service as first-class mail, postage prepaid, in an envelope addressed to:

OK TO ENTER: /LW/

CERTIFICATE OF CORRECTIONS BRANCH
COMMISSIONER FOR PATENTS
P.O. Box 1450
Alexandria, Virginia 22313-1450

on December 10, 2007.

E. RANDALL SMITH

Certificate
DEC 14 2007
of Correction

DEC 14 2007

OIPE IAP10 DEC 13 2007 PATENT & TRADEMARK OFFICE

IN THE UNITED STATES PATENT AND TRADEMARK OFFICE

APPLICANTS:	Ames et al.	§	
		§	
		§	GROUP ART UNIT: 3723
PATENT NO.:	US 7,246,789 B2	§	
		§	
SERIAL NO.:	11/068,386	§	
		§	EXAMINER:
FILED:	March 1, 2005	§	Lee D. Wilson
		§	
ISSUE DATE:	July 24, 2007	§	
		§	
FOR:	Cable Clamping Apparatus and Method	§	
		§	

TRANSMITTAL LETTER
FOR CERTIFICATE OF CORRECTION

Atty. Dkt. No.: 41443.1201
Date: December 10, 2007

Certificate of Correction Branch
Assistant Commissioner for Patents
Washington, D. C. 20231

Dear Sir:

Transmitted herewith for filing in the captioned case are the following:

(1) Form PTO/SB/44, submitted in duplicate. Errors which occur at important points in the captioned patent or which may otherwise affect the understanding or interpretation of the patent are thereon corrected.

(2) A return postcard to acknowledge receipt of these materials. Please stamp and return this postcard to the undersigned.

All of the errors shown in Form PTO/SB/44 are due to Patent Office oversights. A Certificate of Correction is requested under 35 U.S.C. § 254. Applicants believe that no fees are required. However, should any fees be required, please deduct them form E.

DEC 14 2007

Randall Smith, P.C. Deposit Account Number 501294. **Two duplicate copies of this transmittal are enclosed.**

Respectfully submitted,

E. RANDALL SMITH
Reg. No. 38,307
2777 Allen Parkway, Suite 800
Houston, Texas 77019
(713) 528-3100
Fax: (713) 528-3629
ATTORNEY OF RECORD

DEC 14 2007

PTO/SB/44 (04-05)
Approved for use through 04/30/2007. OMB 0651-0033
U.S. Patent and Trademark Office; U.S. DEPARTMENT OF COMMERCE
Under the Paperwork Reduction Act of 1995, no persons are required to respond to a collection of information unless it displays a valid OMB control number.
(Also Form PTO-1050)

UNITED STATES PATENT AND TRADEMARK OFFICE
CERTIFICATE OF CORRECTION

PATENT NO. : **7,246,789 B2**

APPLICATION NO.: **11/068,386**

ISSUE DATE : **July 24, 2007**

INVENTOR(S) : **Ames, et al.**

It is certified that an error appears or errors appear in the above-identified patent and that said Letters Patent is hereby corrected as shown below:

On the Title Page, please insert

-- Related U.S. Application Data

Continuation of Application No. 10/405,083, filed on Apr. 2, 2003, now Pat. No. 6,883,782.

Provisional Application No. 60/407,559, filed on Aug. 30, 2002. --

In Claim 4, col. 7, line 66, please delete "by plurality of hinge pin" and substitute -- by a plurality of hinge pins"--.

MAILING ADDRESS OF SENDER (Please do not use customer number below): **E. Randall Smith**
Jones & Smith, LLP
2777 Allen Parkway, Suite 800
Houston, TX 77019-2129

This collection of information is required by 37 CFR 1.322, 1.323, and 1.324. The information is required to obtain or retain a benefit by the public which is to file (and by the USPTO to process) an application. Confidentiality is governed by 35 U.S.C. 122 and 37 CFR 1.14. This collection is estimated to take 1.0 hour to complete, including gathering, preparing, and submitting the completed application form to the USPTO. Time will vary depending upon the individual case. Any comments on the amount of time you require to complete this form and/or suggestions for reducing this burden, should be sent to the Chief Information Officer, U.S. Patent and Trademark Office, U.S. Department of Commerce, P.O. Box 1450, Alexandria, VA 22313-1450. DO NOT SEND FEES OR COMPLETED FORMS TO THIS ADDRESS. SEND TO: **Attention Certificate of Corrections Branch, Commissioner for Patents, P.O. Box 1450, Alexandria, VA 22313-1450.**

If you need assistance in completing the form, call 1-800-PTO-9199 and select option 2.

DEC 14 2007

OIPE JAP10 DEC 13 2007 PATENT & TRADEMARK OFFICE

IN THE UNITED STATES PATENT AND TRADEMARK OFFICE

APPLICANTS:	Ames et al.	§	
		§	
		§	GROUP ART UNIT: 3723
PATENT NO.:	US 7,246,789 B2	§	
		§	
SERIAL NO.:	11/068,386	§	
		§	EXAMINER:
FILED:	March 1, 2005	§	Lee D. Wilson
		§	
ISSUE DATE:	July 24, 2007	§	
		§	
FOR:	Cable Clamping Apparatus and Method	§	

TRANSMITTAL LETTER
FOR CERTIFICATE OF CORRECTION

Atty. Dkt. No.: 41443.1201
Date: December 10, 2007

Certificate of Correction Branch
Assistant Commissioner for Patents
Washington, D. C. 20231

Dear Sir:

Transmitted herewith for filing in the captioned case are the following:

(1) Form PTO/SB/44, submitted in duplicate. Errors which occur at important points in the captioned patent or which may otherwise affect the understanding or interpretation of the patent are thereon corrected.

(2) A return postcard to acknowledge receipt of these materials. Please stamp and return this postcard to the undersigned.

All of the errors shown in Form PTO/SB/44 are due to Patent Office oversights. A Certificate of Correction is requested under 35 U.S.C. § 254. Applicants believe that no fees are required. However, should any fees be required, please deduct them form E.

Randall Smith, P.C. Deposit Account Number 501294. **Two duplicate copies of this transmittal are enclosed.**

Respectfully submitted,

E. RANDALL SMITH
Reg. No. 38,307
2777 Allen Parkway, Suite 800
Houston, Texas 77019
(713) 528-3100
Fax: (713) 528-3629
ATTORNEY OF RECORD

PTO/SB/44 (04-05)
Approved for use through 04/30/2007. OMB 0651-0033
U.S. Patent and Trademark Office; U.S. DEPARTMENT OF COMMERCE
Under the Paperwork Reduction Act of 1995, no persons are required to respond to a collection of information unless it displays a valid OMB control number.
(Also Form PTO-1050)

UNITED STATES PATENT AND TRADEMARK OFFICE
CERTIFICATE OF CORRECTION

PATENT NO. : 7,246,789 B2

APPLICATION NO.: 11/068,386

ISSUE DATE : July 24, 2007

INVENTOR(S) : Ames, et al.

It is certified that an error appears or errors appear in the above-identified patent and that said Letters Patent is hereby corrected as shown below:

On the Title Page, please insert

-- Related U.S. Application Data

Continuation of Application No. 10/405,083, filed on Apr. 2, 2003, now Pat. No. 6,883,782.

Provisional Application No. 60/407,559, filed on Aug. 30, 2002. --

In Claim 4, col. 7, line 66, please delete "by plurality of hinge pin" and substitute -- by a plurality of hinge pins"--.

MAILING ADDRESS OF SENDER (Please do not use customer number below): **E. Randall Smith**
Jones & Smith, LLP
2777 Allen Parkway, Suite 800
Houston, TX 77019-2129

This collection of information is required by 37 CFR 1.322, 1.323, and 1.324. The information is required to obtain or retain a benefit by the public which is to file (and by the USPTO to process) an application. Confidentiality is governed by 35 U.S.C. 122 and 37 CFR 1.14. This collection is estimated to take 1.0 hour to complete, including gathering, preparing, and submitting the completed application form to the USPTO. Time will vary depending upon the individual case. Any comments on the amount of time you require to complete this form and/or suggestions for reducing this burden, should be sent to the Chief Information Officer, U.S. Patent and Trademark Office, U.S. Department of Commerce, P.O. Box 1450, Alexandria, VA 22313-1450. DO NOT SEND FEES OR COMPLETED FORMS TO THIS ADDRESS. SEND TO: **Attention Certificate of Corrections Branch, Commissioner for Patents, P.O. Box 1450, Alexandria, VA 22313-1450.**

If you need assistance in completing the form, call 1-800-PTO-9199 and select option 2.

OIPE IAP10 DEC 13 2007 PATENT & TRADEMARK OFFICE

IN THE UNITED STATES PATENT AND TRADEMARK OFFICE

APPLICANTS:	Ames et al.	§	
		§	
		§	GROUP ART UNIT: 3723
PATENT NO.:	US 7,246,789 B2	§	
		§	
SERIAL NO.:	11/068,386	§	
		§	EXAMINER:
FILED:	March 1, 2005	§	Lee D. Wilson
		§	
ISSUE DATE:	July 24, 2007	§	
		§	
FOR:	Cable Clamping Apparatus and Method	§	

TRANSMITTAL LETTER
FOR CERTIFICATE OF CORRECTION

Atty. Dkt. No.: 41443.1201
Date: December 10, 2007

Certificate of Correction Branch
Assistant Commissioner for Patents
Washington, D. C. 20231

Dear Sir:

Transmitted herewith for filing in the captioned case are the following:

(1) Form PTO/SB/44, submitted in duplicate. Errors which occur at important points in the captioned patent or which may otherwise affect the understanding or interpretation of the patent are thereon corrected.

(2) A return postcard to acknowledge receipt of these materials. Please stamp and return this postcard to the undersigned.

All of the errors shown in Form PTO/SB/44 are due to Patent Office oversights. A Certificate of Correction is requested under 35 U.S.C. § 254. Applicants believe that no fees are required. However, should any fees be required, please deduct them form E.

Randall Smith, P.C. Deposit Account Number 501294. **Two duplicate copies of this transmittal are enclosed.**

Respectfully submitted,

E. RANDALL SMITH
Reg. No. 38,307
2777 Allen Parkway, Suite 800
Houston, Texas 77019
(713) 528-3100
Fax: (713) 528-3629
ATTORNEY OF RECORD

DEC 14 2007

PTO/SB/44 (04-05)
Approved for use through 04/30/2007. OMB 0651-0033
U.S. Patent and Trademark Office; U.S. DEPARTMENT OF COMMERCE
Under the Paperwork Reduction Act of 1995, no persons are required to respond to a collection of information unless it displays a valid OMB control number.
(Also Form PTO-1050)

UNITED STATES PATENT AND TRADEMARK OFFICE
CERTIFICATE OF CORRECTION

PATENT NO. : 7,246,789 B2

APPLICATION NO.: 11/068,386

ISSUE DATE : July 24, 2007

INVENTOR(S) : Ames, et al.

It is certified that an error appears or errors appear in the above-identified patent and that said Letters Patent is hereby corrected as shown below:

On the Title Page, please insert

-- Related U.S. Application Data

Continuation of Application No. 10/405,083, filed on Apr. 2, 2003, now Pat. No. 6,883,782.

Provisional Application No. 60/407,559, filed on Aug. 30, 2002. --

In Claim 4, col. 7, line 66, please delete "by plurality of hinge pin" and substitute -- by a plurality of hinge pins"--.

MAILING ADDRESS OF SENDER (Please do not use customer number below): **E. Randall Smith**
Jones & Smith, LLP
2777 Allen Parkway, Suite 800
Houston, TX 77019-2129

This collection of information is required by 37 CFR 1.322, 1.323, and 1.324. The information is required to obtain or retain a benefit by the public which is to file (and by the USPTO to process) an application. Confidentiality is governed by 35 U.S.C. 122 and 37 CFR 1.14. This collection is estimated to take 1.0 hour to complete, including gathering, preparing, and submitting the completed application form to the USPTO. Time will vary depending upon the individual case. Any comments on the amount of time you require to complete this form and/or suggestions for reducing this burden, should be sent to the Chief Information Officer, U.S. Patent and Trademark Office, U.S. Department of Commerce, P.O. Box 1450, Alexandria, VA 22313-1450. DO NOT SEND FEES OR COMPLETED FORMS TO THIS ADDRESS. SEND TO: **Attention Certificate of Corrections Branch, Commissioner for Patents, P.O. Box 1450, Alexandria, VA 22313-1450.**

If you need assistance in completing the form, call 1-800-PTO-9199 and select option 2.

DEC 14 2007

UNITED STATES PATENT AND TRADEMARK OFFICE

Commissioner for Patents
United States Patent and Trademark Office
P.O. Box 1450
Alexandria, VA 22313-1450
www.uspto.gov

Jones & Smith, LLP
2777 Allen Parkway, Suite 800
Houston, TX 77019-2141

MAILED

NOV 0 9 2009

OFFICE OF PETITIONS

In re Patent No. 7,246,789	:	
Issue Date: July 24, 2007	:	
Application No. 11/068,386	:	NOTICE
Filed: March 1, 2005	:	
Attorney Docket No. 041443-01201	:	

This is a notice regarding your request for acceptance of a fee deficiency submission under 37 CFR 1.28 filed August 17, 2009. On September 1, 1998, the Court of Appeals for the Federal Circuit held that 37 CFR 1.28(c) is the sole provision governing the time for correction of the erroneous payment of the issue fee as a small entity. **See DH Technology v. Synergystex International, Inc. 154 F.3d 1333, 47 USPQ2d 1865 (Fed. Cir. Sept. 1, 1998).**

The Office no longer investigates or rejects original or reissue applications under 37 CFR 1.56. **1098 Off. Gaz. Pat. Office 502 (January 3, 1989)**. Therefore, nothing in this Notice is intended to imply that an investigation was done.

Your fee deficiency submission under 37 CFR 1.28 is hereby accepted. The petition is **GRANTED**.

This application is no longer entitled to small entity status. Accordingly, all future fees paid in this application must be paid at the large entity rate.

This file is being forwarded to Files Repository.

Telephone inquiries related to this decision should be directed to the Kimberly Inabinet at (571) 272-4618.

Carl Friedman
Petitions Examiner
Office of Petitions

UNITED STATES PATENT AND TRADEMARK OFFICE

Commissioner for Patents
United States Patent and Trademark Office
P.O. Box 1450
Alexandria, VA 22313-1450
www.uspto.gov

Arthi K. Tirey, Esq.
The Sherwin-Williams Company
Legal Dept.
101 Prospect Avenue, N.W.
Cleveland, OH 44115

COPY MAILED

SEP 2 6 2005

OFFICE OF PETITIONS

In re Application of

Farkas, et al.

Application No. 11/068,391

Filed: February 28, 2005

Attorney Docket No. 7474C1

DECISION ON PETITION

This is a decision on the petition under 37 CFR §1.137(b), August 26, 2005, to revive the above-identified application.

The petition is **granted**.

This application became abandoned for failure to timely remit the issue fee of $1,400.00 and the publication fee of $300.00 as required by the Notice of Allowance and Issue Fee Due (the "Notice") mailed May 18, 2005. The Notice set forth a three (3) month statutory period for reply. No response was received within the allowable period. Accordingly, this application became abandoned on August 19, 2005.

The issue fee and publication fee were received on August 26, 2005.

The application is being forwarded to the Office of Patent Publications for further processing.

Telephone inquiries concerning this matter may be directed to the undersigned at (571) 272-3222.

Kenya A. McLaughlin

Kenya A. McLaughlin
Petitions Attorney
Office of Petitions

UNITED STATES PATENT AND TRADEMARK OFFICE

UNITED STATES DEPARTMENT OF COMMERCE
United States Patent and Trademark Office
Address: COMMISSIONER FOR PATENTS
P.O. Box 1450
Alexandria, Virginia 22313-1450
www.uspto.gov

PATTON BOGGS LLP
1801 CALFORNIA STREET
SUITE 4900
DENVER, CO 80202

Mail Date: 04/21/2010

Applicant	: Robert Wight	: DECISION ON REQUEST FOR
Patent Number	: 7584210	: RECALCULATION of PATENT
Issue Date	: 09/01/2009	: TERM ADJUSTMENT IN VIEW
Appliction No	: 11/068,424	: OF WYETH AND NOTICE OF INTENT TO
Filed	: 02/28/2005	: ISSUE CERTIFICATE OF CORRECTION
		:

The Request for Recalculation is **GRANTED** to the extent indicated.

The patent term adjustment has been determined to be **824** days. The USPTO will *sua sponte* issue a certificate of correction reflecting the amount of PTA days determined by the recalculation.

Prior to the issuance of the certificate of correction, the USPTO will afford patentee an opportunity to be heard and request reconsideration. Accordingly, patentee has **one month or thirty (30) days**, whichever is longer, to file a request for reconsideration of this patent term adjustment calculation. See 35 U.S.C. 154(b)(3)(B)(ii) and 37 CFR 1.322(a)(4). No extensions of time will be granted under 37 CFR 1.136.

Patentee should use document code PET.OP if electronically filing a request for reconsideration of this patent term adjustment calculation. The patentee must also include the information required by 37 CFR 1.705(b)(2) and the fee required by 37 CFR 1.18(e). If patentee does not file a timely request for reconsideration of this patent term adjustment calculation including the information required by 37 CFR 1.705(b)(2) and the fee required by 37 CFR 1.18(e), the USPTO will issue a certificate of correction reflecting the PTA determination noted above.

Patentee should be aware that in order to preserve the right to review in the United States District Court for the District of Columbia of the USPTO patent term adjustment determination, patentee must ensure that he or she also take the steps required under 35 U.S.C. 154(b)(4)(A) in a timely manner. Nothing in the request for recalculation should be construed as providing an alternative time frame for commencing a civil action under 35 U.S.C. 154(b)(4)(A).

Any questions concerning this decision should be directed to the Office of Patent Legal Administration at 571-272-7702.

UNITED STATES PATENT AND TRADEMARK OFFICE

UNITED STATES DEPARTMENT OF COMMERCE
United States Patent and Trademark Office
Address: COMMISSIONER FOR PATENTS
P.O. Box 1450
Alexandria, Virginia 22313-1450
www.uspto.gov

YOUNG & THOMPSON
209 Madison Street
Suite 500
Alexandria, VA 22314

Mail Date: 04/20/2010

Applicant	: Hiromu Itoi	: DECISION ON REQUEST FOR
Patent Number	: 7585276	: RECALCULATION of PATENT
Issue Date	: 09/08/2009	: TERM ADJUSTMENT IN VIEW
Appliction No	: 11/068,433	: OF WYETH AND NOTICE OF INTENT TO
Filed	: 03/01/2005	: ISSUE CERTIFICATE OF CORRECTION
		:

The Request for Recalculation is **GRANTED** to the extent indicated.

The patent term adjustment has been determined to be **1224** days. The USPTO will *sua sponte* issue a certificate of correction reflecting the amount of PTA days determined by the recalculation.

Prior to the issuance of the certificate of correction, the USPTO will afford patentee an opportunity to be heard and request reconsideration. Accordingly, patentee has **one month or thirty (30) days**, whichever is longer, to file a request for reconsideration of this patent term adjustment calculation. See 35 U.S.C. 154(b)(3)(B)(ii) and 37 CFR 1.322(a)(4). No extensions of time will be granted under 37 CFR 1.136.

Patentee should use document code PET.OP if electronically filing a request for reconsideration of this patent term adjustment calculation. The patentee must also include the information required by 37 CFR 1.705(b)(2) and the fee required by 37 CFR 1.18(e). If patentee does not file a timely request for reconsideration of this patent term adjustment calculation including the information required by 37 CFR 1.705(b)(2) and the fee required by 37 CFR 1.18(e), the USPTO will issue a certificate of correction reflecting the PTA determination noted above.

Patentee should be aware that in order to preserve the right to review in the United States District Court for the District of Columbia of the USPTO patent term adjustment determination, patentee must ensure that he or she also take the steps required under 35 U.S.C. 154(b)(4)(A) in a timely manner. Nothing in the request for recalculation should be construed as providing an alternative time frame for commencing a civil action under 35 U.S.C. 154(b)(4)(A).

Any questions concerning this decision should be directed to the Office of Patent Legal Administration at 571-272-7702.

UNITED STATES PATENT AND TRADEMARK OFFICE

Commissioner for Patents
United States Patent and Trademark Office
P.O. Box 1450
Alexandria, VA 22313-1450
www.uspto.gov

COPY MAILED
OCT 18 2007
OFFICE OF PETITIONS

TROXELL LAW OFFICE PLLC
5205 LEESBURG PIKE, SUITE 1404
FALLS CHURCH VA 22041

In re Application of	:
Wei-Teh Ho	:
Application No. 11/068,448	: DECISION GRANTING PETITION
Filed: February 28, 2005	: UNDER 37 CFR 1.137(b)
For: CHEST-DEVELOPING EXERCISER	:

This is a decision on the petition under 37 CFR 1.137(b), filed May 4, 2007, to revive the above-identified application.

The petition is **GRANTED**.

The petition satisfies the conditions for revival pursuant to the provisions of 37 CFR 1.137(b) in that (1) the reply in the form of an RCE and an amendment; (2) the petition fee; and (3) the required statement of unintentional delay have been received. Accordingly, the reply to the Final Rejection of October 27, 2007, is accepted as having been unintentionally delayed.

Telephone inquiries concerning this decision should be directed to the undersigned at (571) 272-3208.

This matter is being referred to Technology Center AU 3764 to consider the Request For Continued Examination (RCE) submitted May 4, 2007.

Karen Creasy

Karen Creasy
Petitions Examiner
Office of Petitions

UNITED STATES PATENT AND TRADEMARK OFFICE

Commissioner for Patents
United States Patent and Trademark Office
P. O. Box 1450
Alexandria, VA 22313-1450
www. uspto. gov

CANTOR COLBURN, LLP
20 CHURCH STREET
22ND FLOOR
HARTFORD, CT 06103

COPY MAILED

SEP 17 2008

In re Application of	:	
Jang-Kun Song et al	:	
Application No. 11/068,461	:	ON PETITION
Filed: February 23, 2005	:	
Attorney Docket No. PNK-0294-C2		

This is a decision on the petition, filed September 16, 2008 under 37 CFR 1.313(c)(2) to withdraw the above-identified application from issue after payment of the issue fee.

The petition is **GRANTED**.

The above-identified application is withdrawn from issue for consideration of a submission under 37 CFR 1.114 (request for continued examination). See 37 CFR 1.313(c)(2).

Petitioner is advised that the issue fee paid on August 13, 2008 in the above-identified application cannot be refunded. If, however, the above-identified application is again allowed, petitioner may request that it be applied towards the issue fee required by the new Notice of Allowance.[1]

Telephone inquiries should be directed to Irvin Dingle at (571) 272-3210.

This matter is being referred to Technology Center AU 2871 for processing of the request for continued examination under 37 CFR 1.114 and for consideration of the concurrently filed Information Disclosure Statement.

Irvin Dingle
Petitions Examiner
Office of Petitions

[1] The request to apply the issue fee to the new Notice may be satisfied by completing and returning the new Issue Fee Transmittal Form PTOL-85(b), which includes the following language thereon: Commissioner for Patents is requested to apply the Issue Fee and Publication Fee (if any) or re-apply any previously paid issue fee to the application identified above. Petitioner is advised that, whether a fee is indicated as being due or not, the Issue Fee Transmittal Form **must** be completed and timely submitted to avoid abandonment. Note the language in bold text on the first page of the Notice of Allowance and Fee(s) Due (PTOL-85).

UNITED STATES PATENT AND TRADEMARK OFFICE

UNITED STATES DEPARTMENT OF COMMERCE
United States Patent and Trademark Office
Address: COMMISSIONER FOR PATENTS
P.O. Box 1450
Alexandria, Virginia 22313-1450
www.uspto.gov

CANTOR COLBURN, LLP
20 Church Street
22nd Floor
Hartford, CT 06103

Mail Date: 04/20/2010

Applicant	: Jang-Kun Song	: DECISION ON REQUEST FOR
Patent Number	: 7573554	: RECALCULATION of PATENT
Issue Date	: 08/11/2009	: TERM ADJUSTMENT IN VIEW
Appliction No	: 11/068,461	: OF WYETH
Filed	: 02/23/2005	:
		:

The Patentee's Request for Recalculation is **DISMISSED.**

This Request is deemed ineligible for consideration for one or more of the following reasons:

(A). The patent for which PTA recalculation is requested is either a design or reissue application or is a reexamination proceeding;

(B). The patent for which PTA recalculation is requested resulted from a utility or plant application filed under 35 USC 111(a) before May 29, 2000 and no CPA filed in the application on/after May 29, 2000;

(C). The patent for which PTA recalculation is requested resulted from an international application in which the international filing date was before May 29, 2000 and no CPA filed in the application on/after May 29, 2000;

(D). The patent for which PTA recalculation is requested issued on/after March 2, 2010;

(E). The Request for Recalculation was filed more than 180 days after the grant date of the patent and the request was not filed within two months of a dismissal of a request for reconsideration of the of the patent term under 37 CFR 1.705(d);

(F). The Request for Recalculation is not solely limited to USPTO pre-Wyeth interpretation of 35 U.S.C. 154(b)(2)(A);

or

(G). A civil action was filed pursuant to 35 U.S.C. 154(b)(4)(A)concerning the same patent at issue in this request.

Patentee may file a reply to this decision dismissing the Request for Recalculation. Patentee must file such reply within one month or thirty days, whichever is longer, of the mail date of the decision dismissing the Request for Recalculation. No fee is required if patentee is asserting in the reply that the dismissal for ineligibility is improper.

Patentee should use document code PET.OP if electronically filing a reply to this dismissal. If the USPTO finds that the request was improperly deemed ineligible, the USPTO will mail applicant a recalculation determination.

Patentee should be aware that in order to preserve the right to review in the United States District Court for the District of Columbia of the USPTO patent term adjustment determination, patentee must ensure that he or she also take the steps required under 35 U.S.C. 154(b)(4)(A). Nothing in the request for recalculation should be construed as providing an alternative time frame for commencing a civil action under 35 U.S.C. 154 (b)(4)(A).

Any questions concerning this decision should be directed to the Office of Patent Legal Administration at 571-272-7702.

UNITED STATES PATENT AND TRADEMARK OFFICE

UNITED STATES DEPARTMENT OF COMMERCE
United States Patent and Trademark Office
Address: COMMISSIONER FOR PATENTS
P.O. Box 1450
Alexandria, Virginia 22313-1450
www.uspto.gov

CANTOR COLBURN, LLP
20 Church Street
22nd Floor
Hartford, CT 06103

Mail Date: 05/17/2010

Applicant : Jang-Kun Song
Patent Number : 7573554
Issue Date : 08/11/2009
Application No : 11/068,461
Filed : 02/23/2005

: NOTICE CONCERNING IMPROPER
: DISMISSAL OF THE REQUEST
: FOR RECALCULATION OF
: PATENT TERM ADJUSTMENT
: IN VIEW OF WYETH

The United States Patent and Trademark Office (USPTO) discovered that in processing the recent recalculation decisions mailed in response to patentee's filed Request for Recalculation of Patent Term Adjustment in view of Wyeth, the USPTO mistakenly dismissed a small number of requests as ineligible. The dismissals involve requests that were filed on February 9-12, 2010, for patents that were granted on August 11, 2009. Any request that was filed on February 8, 2010 was properly deemed eligible for patent term adjustment (PTA) and was recalculated.

Patents meeting the above criteria were eligible because the USPTO was closed February 8-11, 2010, due to a snowstorm. See Closing of the United States Patent and Trademark Office from Monday February, 8, 2010, through Thursday, February 11, 2010, 1352 *Off. Gaz. Pat. Office* 146 (March 16, 2010). The Office considered each day from Monday, February 8, 2010, through Thursday, February 11, 2010, to be a "Federal holiday within the District of Columbia" under 35 U.S.C. § 21(b) and 37 CFR 1.6, 1.7, 1.9, 2.2(d), 2.195 and 2.196. Any actions that were due from Monday, February, 8, 2010, through Thursday, February 11, 2010, (or the preceding Saturday (February 6, 2010) or Sunday (February 7, 2010)) will be considered timely if the action was taken on the next succeeding business day on which the USPTO was open, which was February 12, 2010.

This notice **VACATES** the previous mailed decision in the patented file that deemed patentee ineligible for the request for recalculation. Patentee's request for recalculation is GRANTED.

The patent term adjustment has been determined to be **30** days. The USPTO will *sua sponte* issue a certificate of correction reflecting the amount of PTA days determined by the recalculation.

Prior to the issuance of the certificate of correction, the USPTO will afford patentee an opportunity to be heard and request reconsideration. Accordingly, patentee has **one month or thirty (30) days** from the mail date of this notice, whichever is longer, to file a request for reconsideration of this PTA calculation. See 35 U.S.C. § 154(b)(3)(B)(ii) and 37 CFR 1.322(a)(4).

Patentee should use document code PET.OP if electronically filing a request for reconsideration of this PTA calculation. The patentee must also include the information required by 37 CFR 1.705(b)(2) and the fee required by 37 CFR 1.18(e). If patentee does not file a timely request for reconsideration of this PTA calculation, including the information required by 37 CFR 1.705(b)(2) and the fee required by 37 1.18(e), the USPTO will issue a certificate of correction reflecting the PTA determination noted above.

Patentee should be aware that in order to preserve the right of review of the USPTO's PTA deterimation in the United States District Court for the District of Columbia, patentee must ensure that the steps required under 35 U.S.C. § 154(b)(4) are taken in a timely manner. Nothing in the request for recalculation should be construed as providing an alternative time frame for commencing a civil action under 35 U.S.C. § 154(b)(4).

UNITED STATES PATENT AND TRADEMARK OFFICE

Commissioner for Patents
United States Patent and Trademark Office
P.O. Box 1450
Alexandria, VA 22313-1450
www.uspto.gov

STANLEY H. KREMEN
4 LENAPE LANE
EAST BRUNSWICK NJ 08816

COPY MAILED

NOV 03 2008

OFFICE OF PETITIONS

In re Application of	:
Scandurra, Marco	:
Application No. 11/068,470	: DECISION GRANTING PETITION
Filed: February 22, 2005	: UNDER 37 CFR 1.78(a)(3) AND
Attorney Docket No. 51900-MARCO-004	: UNDER 37 CFR 1.78(a)(6)

This is a decision on the petitions under 37 CFR §§ 1.78(a)(3) and 1.78(a)(6), filed October 29, 2008, to accept an unintentionally delayed claim under 35 U.S.C. §§120, 365(c) and 119(e) for the benefit of the prior-filed applications set forth in the concurrently filed amendment.

The petitions are **GRANTED**.

A petition for acceptance of a claim for late priority under 37 CFR §§ 1.78(a)(3) and 1.78(a)(6) is only applicable to those applications filed on or after November 29, 2000. Further, the petition is appropriate only after the expiration of the period specified in 37 CFR §§ 1.78(a)(2)(ii) and 1.78(a)(5)(ii). In addition, the petition under 37 CFR §§ 1.78(a)(3) and 1.78(a)(6) must be accompanied by:

(1) the reference required by 35 U.S.C. §§ 120 and 119(e) and 37 CFR §§ 1.78(a)(2)(i) and 1.78(a)(5)(i) of the prior-filed application, unless previously submitted;
(2) the surcharge set forth in § 1.17(t); and
(3) a statement that the entire delay between the date the claim was due under 37 CFR §§ 1.78(a)(2)(ii) and 1.78(a)(5)(ii) and the date the claim was filed was unintentional. The Commissioner may require additional where there is a question whether the delay was unintentional.

The instant application was filed on February 22, 2005 and was pending at the time of filing of the instant petition. A reference to the prior-filed applications has been included in an amendment to the first sentence of the specification following the title, as required by 37 CFR §§ 1.78(a)(2)(iii) and 1.78(a)(5)(iii).

The instant nonprovisional application was filed after November 29, 2000, and the claim for priority herein is submitted after expiration of the period specified in 37 CFR §§ 1.78(a)(2)(ii) and 1.78(a)(5)(ii). *See* 35 U.S.C. §§ 120 and 365(c) and § 119(e). Accordingly, having found that the instant petition satisfies the conditions of 37 CFR §§ 1.78(a)(3) and 1.78(a)(6) for acceptance of an unintentionally delayed claim for priority under 35 U.S.C. §§ 120 and 365(c)

and § 119(e), the petition to accept an unintentionally delayed claim of benefit to the prior-filed applications is granted.

Petitioner states, "The Present Application also claims the benefit of and priority to the aforementioned PCT application and to both aforementioned Provisional Applications." The Office is going to construe this statement as simply a reiteration of the previous sentence, "This application claims the benefit of and priority to this PCT application which, in turn, claims the benefit of and priority to US Provisional Applications Numbers 60/481,999 filed on February 2, 2008 and 60/521,774 filed on July 1, 2004 by the Present Inventor."

The granting of the petition to accept the delayed benefit claim to the prior-filed applications under 37 CFR §§ 1.78(a)(3) and 1.78(a)(6) should not be construed as meaning that the instant application is entitled to the benefit of the filing date of the prior-filed applications. In order for the instant application to be entitled to the benefit of the prior-filed applications, all other requirements under 35 U.S.C. §120 and 1.78(a)(1) and (a)(2) and under 35 U.S.C. §119(e) and 37 CFR 1.78(a)(4) and (a)(5) must be met. Similarly, the fact that the corrected Filing Receipt accompanying this decision on petition includes the prior-filed applications should not be construed as meaning that applicant is entitled to the claim for benefit of priority to the prior-filed applications noted thereon. Accordingly, the examiner will, in due course, consider this benefit claim and determine whether the instant application is entitled to the benefit of the earlier filing date.

A corrected Filing Receipt, which includes the priority claim to the prior-filed applications, accompanies this decision on petition.

The petition under 37 CFR 1.182 to expedite processing is also **GRANTED**.

Any questions concerning this matter may be directed to the undersigned at (571) 272-3206.

This matter is being referred to Technology Center Art Unit 3748 for appropriate action on the amendment submitted October 29, 2008, including consideration by the examiner of the claim under 35 U.S.C. § §120 and 365(c) and 37 CFR 1.78(a)(2) for the benefit of the prior-filed applications, and for consideration of the claim under 35 U.S.C. §119(e) and 37 CFR 1.78(a)(5) for the benefit of the prior-filed provisional application.

Liana Walsh
Petitions Examiner
Office of Petitions

ATTACHMENT: Corrected Filing Receipt

UNITED STATES PATENT AND TRADEMARK OFFICE

UNITED STATES DEPARTMENT OF COMMERCE
United States Patent and Trademark Office
Address: COMMISSIONER FOR PATENTS
P.O. Box 1450
Alexandria, Virginia 22313-1450
www.uspto.gov

APPLICATION NUMBER	FILING or 371(c) DATE	GRP ART UNIT	FIL FEE REC'D	ATTY.DOCKET.NO	TOT CLAIMS	IND CLAIMS
11/068,470	02/22/2005	3748	1100	51900-MARCO-004	44	1

CONFIRMATION NO. 6306

CORRECTED FILING RECEIPT

34325
STANLEY H. KREMEN
4 LENAPE LANE
EAST BRUNSWICK, NJ 08816

OC000000032903240

Date Mailed: 11/03/2008

Receipt is acknowledged of this non-provisional patent application. The application will be taken up for examination in due course. Applicant will be notified as to the results of the examination. Any correspondence concerning the application must include the following identification information: the U.S. APPLICATION NUMBER, FILING DATE, NAME OF APPLICANT, and TITLE OF INVENTION. Fees transmitted by check or draft are subject to collection. Please verify the accuracy of the data presented on this receipt. **If an error is noted on this Filing Receipt, please submit a written request for a Filing Receipt Correction. Please provide a copy of this Filing Receipt with the changes noted thereon. If you received a "Notice to File Missing Parts" for this application, please submit any corrections to this Filing Receipt with your reply to the Notice. When the USPTO processes the reply to the Notice, the USPTO will generate another Filing Receipt incorporating the requested corrections**

Applicant(s)

Marco Scandurra, Cambridge, MA;

Power of Attorney: The patent practitioners associated with Customer Number 34325

Domestic Priority data as claimed by applicant

This application is a CON of PCT/US05/02820 01/31/2005
which claims benefit of 60/481,999 02/02/2004
and claims benefit of 60/521,774 07/01/2004

Foreign Applications

If Required, Foreign Filing License Granted: 10/31/2008

The country code and number of your priority application, to be used for filing abroad under the Paris Convention, is **US 11/068,470**

Projected Publication Date: Not Applicable

Non-Publication Request: No

Early Publication Request: No
**** SMALL ENTITY ****

Title

RADIOMETRIC PROPULSION SYSTEM

Preliminary Class

060

PROTECTING YOUR INVENTION OUTSIDE THE UNITED STATES

Since the rights granted by a U.S. patent extend only throughout the territory of the United States and have no effect in a foreign country, an inventor who wishes patent protection in another country must apply for a patent in a specific country or in regional patent offices. Applicants may wish to consider the filing of an international application under the Patent Cooperation Treaty (PCT). An international (PCT) application generally has the same effect as a regular national patent application in each PCT-member country. The PCT process **simplifies** the filing of patent applications on the same invention in member countries, but **does not result** in a grant of "an international patent" and does not eliminate the need of applicants to file additional documents and fees in countries where patent protection is desired.

Almost every country has its own patent law, and a person desiring a patent in a particular country must make an application for patent in that country in accordance with its particular laws. Since the laws of many countries differ in various respects from the patent law of the United States, applicants are advised to seek guidance from specific foreign countries to ensure that patent rights are not lost prematurely.

Applicants also are advised that in the case of inventions made in the United States, the Director of the USPTO must issue a license before applicants can apply for a patent in a foreign country. The filing of a U.S. patent application serves as a request for a foreign filing license. The application's filing receipt contains further information and guidance as to the status of applicant's license for foreign filing.

Applicants may wish to consult the USPTO booklet, "General Information Concerning Patents" (specifically, the section entitled "Treaties and Foreign Patents") for more information on timeframes and deadlines for filing foreign patent applications. The guide is available either by contacting the USPTO Contact Center at 800-786-9199, or it can be viewed on the USPTO website at http://www.uspto.gov/web/offices/pac/doc/general/index.html.

For information on preventing theft of your intellectual property (patents, trademarks and copyrights), you may wish to consult the U.S. Government website, http://www.stopfakes.gov. Part of a Department of Commerce initiative, this website includes self-help "toolkits" giving innovators guidance on how to protect intellectual property in specific countries such as China, Korea and Mexico. For questions regarding patent enforcement issues, applicants may call the U.S. Government hotline at 1-866-999-HALT (1-866-999-4158).

LICENSE FOR FOREIGN FILING UNDER

Title 35, United States Code, Section 184

Title 37, Code of Federal Regulations, 5.11 & 5.15

GRANTED

The applicant has been granted a license under 35 U.S.C. 184, if the phrase "IF REQUIRED, FOREIGN FILING LICENSE GRANTED" followed by a date appears on this form. Such licenses are issued in all applications where the conditions for issuance of a license have been met, regardless of whether or not a license may be required as

set forth in 37 CFR 5.15. The scope and limitations of this license are set forth in 37 CFR 5.15(a) unless an earlier license has been issued under 37 CFR 5.15(b). The license is subject to revocation upon written notification. The date indicated is the effective date of the license, unless an earlier license of similar scope has been granted under 37 CFR 5.13 or 5.14.

This license is to be retained by the licensee and may be used at any time on or after the effective date thereof unless it is revoked. This license is automatically transferred to any related applications(s) filed under 37 CFR 1.53(d). This license is not retroactive.

The grant of a license does not in any way lessen the responsibility of a licensee for the security of the subject matter as imposed by any Government contract or the provisions of existing laws relating to espionage and the national security or the export of technical data. Licensees should apprise themselves of current regulations especially with respect to certain countries, of other agencies, particularly the Office of Defense Trade Controls, Department of State (with respect to Arms, Munitions and Implements of War (22 CFR 121-128)); the Bureau of Industry and Security, Department of Commerce (15 CFR parts 730-774); the Office of Foreign AssetsControl, Department of Treasury (31 CFR Parts 500+) and the Department of Energy.

NOT GRANTED

No license under 35 U.S.C. 184 has been granted at this time, if the phrase "IF REQUIRED, FOREIGN FILING LICENSE GRANTED" DOES NOT appear on this form. Applicant may still petition for a license under 37 CFR 5.12, if a license is desired before the expiration of 6 months from the filing date of the application. If 6 months has lapsed from the filing date of this application and the licensee has not received any indication of a secrecy order under 35 U.S.C. 181, the licensee may foreign file the application pursuant to 37 CFR 5.15(b).

UNITED STATES PATENT AND TRADEMARK OFFICE

UNITED STATES DEPARTMENT OF COMMERCE
United States Patent and Trademark Office
Address: COMMISSIONER FOR PATENTS
P.O. Box 1450
Alexandria, Virginia 22313-1450
www.uspto.gov

SCHWEGMAN, LUNDBERG & WOESSNER, P.A.
P.O. BOX 2938
MINNEAPOLIS, MN 55402

Mail Date: 04/20/2010

Applicant	: Vineel Vallapureddy	: DECISION ON REQUEST FOR
Patent Number	: 7610065	: RECALCULATION of PATENT
Issue Date	: 10/27/2009	: TERM ADJUSTMENT IN VIEW
Appliction No	: 11/068,478	: OF WYETH AND NOTICE OF INTENT TO
Filed	: 02/28/2005	: ISSUE CERTIFICATE OF CORRECTION
		:

The Request for Recalculation is **GRANTED** to the extent indicated.

The patent term adjustment has been determined to be **781** days. The USPTO will *sua sponte* issue a certificate of correction reflecting the amount of PTA days determined by the recalculation.

Prior to the issuance of the certificate of correction, the USPTO will afford patentee an opportunity to be heard and request reconsideration. Accordingly, patentee has **one month or thirty (30) days**, whichever is longer, to file a request for reconsideration of this patent term adjustment calculation. See 35 U.S.C. 154(b)(3)(B)(ii) and 37 CFR 1.322(a)(4). No extensions of time will be granted under 37 CFR 1.136.

Patentee should use document code PET.OP if electronically filing a request for reconsideration of this patent term adjustment calculation. The patentee must also include the information required by 37 CFR 1.705(b)(2) and the fee required by 37 CFR 1.18(e). If patentee does not file a timely request for reconsideration of this patent term adjustment calculation including the information required by 37 CFR 1.705(b)(2) and the fee required by 37 CFR 1.18(e), the USPTO will issue a certificate of correction reflecting the PTA determination noted above.

Patentee should be aware that in order to preserve the right to review in the United States District Court for the District of Columbia of the USPTO patent term adjustment determination, patentee must ensure that he or she also take the steps required under 35 U.S.C. 154(b)(4)(A) in a timely manner. Nothing in the request for recalculation should be construed as providing an alternative time frame for commencing a civil action under 35 U.S.C. 154(b)(4)(A).

Any questions concerning this decision should be directed to the Office of Patent Legal Administration at 571-272-7702.

UNITED STATES PATENT AND TRADEMARK OFFICE

Commissioner for Patents
United States Patent and Trademark Office
P.O. Box 1450
Alexandria, VA 22313-1450
www.uspto.gov
DIW Jan-06

PATTERSON, THENTE, SKAAR & CHRISTENSEN, P.A.
4800 IDS CENTER
80 SOUTH 8TH STREET
MINNEAPOLIS, MN 55402-2100

COPY MAILED

JAN 27 2006

OFFICE OF PETITIONS

In re Application of	:	
James R. Massie	:	
Application No. 11/068,479	:	ON PETITION
Filed: 28 February, 2005	:	
Atty Docket No. 3025.05US03	:	

This communication is in response to the paper styled as a petition under 37 CFR 1.181(f), filed on 9 December, 2005, which which is being treated as a petition to accord the above-identified application a filing date of 28 February, 2005.

On 28 February, 2005, the application was deposited.

On 21 June, 2005, Initial Patent Examination Division mailed a Notice of Incomplete Nonprovisional Application, stating that the application had not been accorded a filing date because it did not include at least one claim.

In response, on 28 October, 2005, a preliminary amendment amending the claims was filed. Accordingly, the application was accorded a filing date of 28 October, 2005.

In response, the present reply was filed on 9 December, 2005. Petitioner asserts that a claim was in fact present among the application papers filed on 28 February, 2005, and that the application is therefore entitled to a filing date of 28 February, 2005.

A review of the official file reveals that Page 24 of the specification deposited on 28 February, 2005, stated the following:

WHAT IS CLAIMED:

1. The invention as shown and described herein.

Construing the paper filed in a manner most favorable to applicant since the word "claim" is included, the Office is interpreting this filing as a claim for filing date purposes. The claim is therefore considered sufficient to accord the application a filing date of 28 February, 2005.

The Notice mailed on 21 June, 2005, is vacated.

As the petition was necessitated by an Office error, the petition fee will be refunded to counsel's deposit account, No. 16-0631.

The application is being forwarded to the Office of Initial Patent Examination for further processing with a filing date of 28 February, 2005, not 28 October, 2005, using only the application papers, including one (1) page containing one (1) claim, deposited on 28 February, 2005.

Telephone inquiries concerning this matter may be directed to the undersigned at (571)272-3231.

D Wood

Douglas I. Wood
Senior Petitions Attorney
Office of Petitions

UNITED STATES PATENT AND TRADEMARK OFFICE

Commissioner for Patents
United States Patent and Trademark Office
P.O. Box 1450
Alexandria, VA 22313-1450
www.uspto.gov
DIW Aug-07

BLAKE LEGAL ADVISORS
C/O DUANE C. BLAKE, ESQ.
67 STERLING ROAD
WESTWOOD MA 02090

COPY MAILED

AUG 03 2007

OFFICE OF PETITIONS

In re Application of	:	
Ianniello et al.	:	
Application Number: 11/068481	:	DECISION ON PETITION
Filing Date: 02/28/2005	:	
Attorney Docket Number: PI-022805-Continuation	:	

This is a decision on the petition filed on 8 March, 2007, under 37 CFR 1.137(b),[1] to revive the above-identified application.

The petition is **GRANTED**.

The application became abandoned on 9 March, 2006, for failure to timely file a reply to the Office action requiring restriction and/or election mailed on 3 February, 2006, which set a one (1) month shortened period for reply. No extensions of the time for reply in accordance with 37 CFR 1.136(a) were obtained. Notice of Abandonment was mailed on 9 November, 2006.

Petitioner has filed a provisional election in response as the required reply.

---

[1] Effective December 1, 1997, the provisions of 37 CFR 1.137(b) now provide that where the delay in reply was unintentional, a petition may be filed to revive an abandoned application or a lapsed patent pursuant to 37 CFR 1.137(b). A grantable petition filed under the provisions of 37 CFR 1.137(b) must be accompanied by:

(1) the required reply, unless previously filed. In a nonprovisional application abandoned for failure to prosecute, the required reply may be met by the filing of a continuing application. In a nonprovisional utility or plant application filed on or after June 8, 1995, and abandoned for failure to prosecute, the required reply may also be met by the filing of a request for continuing examination in compliance with § 1.114. In an application or patent, abandoned or lapsed for failure to pay the issue fee or any portion thereof, the required reply must be the payment of the issue fee or any outstanding balance thereof. In an application, abandoned for failure to pay the publication fee, the required reply must include payment of the publication fee.

(2) the petition fee as set forth in 37 CFR 1.17(m);

(3) a statement that the entire delay in filing the required reply from the due date for the reply until the filing of a grantable petition pursuant to 37 CFR 1.137(b) was unintentional. The Commissioner may required additional information where there is a question whether the delay was unintentional; and

(4) any terminal disclaimer (and fee as set forth in 37 CFR 1.20(d)) required pursuant to 37 CFR 1.137(c)).

Receipt of the revocation and new power of attorney is acknowledged.

The application is being forwarded to Technology Center Art Unit 3677 for further processing.

Telephone inquiries concerning this matter may be directed to the undersigned at (571)272-3231.

DWood

Douglas I. Wood
Senior Petitions Attorney
Office of Petitions

Encl: Notice Regarding Change of Power of Attorney
Notice of Acceptance of Power of Attorney

UNITED STATES PATENT AND TRADEMARK OFFICE

UNITED STATES DEPARTMENT OF COMMERCE
United States Patent and Trademark Office
Address: COMMISSIONER FOR PATENTS
P.O. Box 1450
Alexandria, Virginia 22313-1450
www.uspto.gov

APPLICATION NUMBER	FILING OR 371 (c) DATE	FIRST NAMED APPLICANT	ATTY. DOCKET NO./TITLE
11/068,481	02/28/2005	Peter J. Ianniello	PI-022805-Continuation

CONFIRMATION NO. 5725

OC000000025173735

Blake Legal Advisors
C/O Duane C. Blake, Esq.
67 Sterling Road
Westwood, MA 02090

Date Mailed: 08/02/2007

NOTICE OF ACCEPTANCE OF POWER OF ATTORNEY

This is in response to the Power of Attorney filed 03/08/2007.

The Power of Attorney in this application is accepted. Correspondence in this application will be mailed to the above address as provided by 37 CFR 1.33.

D Wood

Office of Initial Patent Examination (571) 272-4000, or 1-800-PTO-9199

ATTORNEY/APPLICANT COPY

UNITED STATES PATENT AND TRADEMARK OFFICE

UNITED STATES DEPARTMENT OF COMMERCE
United States Patent and Trademark Office
Address: COMMISSIONER FOR PATENTS
P.O. Box 1450
Alexandria, Virginia 22313-1450
www.uspto.gov

APPLICATION NUMBER	FILING OR 371 (c) DATE	FIRST NAMED APPLICANT	ATTY. DOCKET NO./TITLE
11/068,481	02/28/2005	Peter J. Ianniello	PI-022805-Continuation

CONFIRMATION NO. 5725

OC000000025173732

Blake Legal Advisors
C/O Duane C. Blake, Esq.
67 Sterling Road
Westwood, MA 02090

Date Mailed: 08/02/2007

NOTICE REGARDING CHANGE OF POWER OF ATTORNEY

This is in response to the Power of Attorney filed 03/08/2007.

- The Power of Attorney to you in this application has been revoked by the applicant. Future correspondence will be mailed to the new address of record(37 CFR 1.33).

Office of Initial Patent Examination (571) 272-4000, or 1-800-PTO-9199
NEW ATTORNEY/AGENT COPY

UNITED STATES PATENT AND TRADEMARK OFFICE

Commissioner for Patents
United States Patent and Trademark Office
P.O. Box 1450
Alexandria, VA 22313-1450
www.uspto.gov

MICHAELSON & ASSOCIATES
P.O. BOX 8489
RED BANK NJ 07701

COPY MAILED
MAR 30 2007
OFFICE OF PETITIONS

RECEIVED
MAR 30 2007
OFFICE OF PETITIONS

CANCELLED

In re Application of
Martin Jansen
Application No. 11/068,492
Filed: February 28, 2005
Attorney Docket No. Revab-3
(P62659US00)

ON PETITION

This is a decision on the petition under 37 CFR 1.137(b), filed September 25, 2006, to revive the above-identified application.

The petition is **GRANTED**.

The application became abandoned for failure to reply in a timely manner to the non-final Office action mailed, March 14, 2006, which set a shortened statutory period for reply of three (3) months. No extensions of time under the provisions of 37 CFR 1.136(a) was obtained. Accordingly, the application became abandoned on June 15, 2006.

The petition satisfies the requirements of 37 CFR 1.137(b) in that petitioner has supplied (1) the reply in the form of an amendment; (2) the petition fee of $1500; and (3) an adequate statement of unintentional delay.

Telephone inquiries concerning this decision should be directed to Terri Williams at (571) 272-2991.

The application file is being referred to Technology Center Art Unit 3611 for appropriate action on the concurrently filed amendment.

Liana Walsh
Petitions Examiner
Office of Petitions

UNITED STATES PATENT AND TRADEMARK OFFICE

Commissioner for Patents
United States Patent and Trademark Office
P.O. Box 1450
Alexandria, VA 22313-1450
www.uspto.gov

KELLEY DRYE & WARREN LLP
400 ALTLANTIC STREET , 13TH FLOOR
STAMFORD CT 06901

COPY MAILED

AUG 0 3 2009

OFFICE OF PETITIONS

In re Application of
CARUS, Alwin B. et al.
Application No. 11/068,493
Filed: February 28, 2005
Attorney Docket No. **NU-144(US)**

DECISION ON PETITION
TO WITHDRAW
FROM RECORD

This is a decision on the Request to Withdraw as attorney or agent of record under 37 C.F.R. § 1.36(b), filed June 18, 2009.

The request is **APPROVED**.

A grantable request to withdraw as attorney/agent of record must be signed by every attorney/agent seeking to withdraw or contain a clear indication that one attorney is signing on behalf of another/others. The Office requires the practitioner(s) requesting withdrawal to certify that he, she, or they have: (1) given reasonable notice to the client, prior to the expiration of the response period, that the practitioner(s) intends to withdraw from employment; (2) delivered to the client or a duly authorized representative of the client all papers and property (including funds) to which the client is entitled; and (3) notified the client of any responses that may be due and the time frame within which the client must respond, pursuant 37 CFR 10.40(c).

The request was signed by Marvin Wachs on behalf of all attorneys of record who are associated with customer No. 47670. All attorneys/agents associated with the Customer Number 47670 have been withdrawn. Applicant is reminded that there is no attorney of record at this time.

The request to change the correspondence address of record is not acceptable as the requested correspondence address is not that of: (1) the first named signing inventor; or (2) an intervening assignee of the entire interest under 37 C.F.R 3.71. All future communications from the Office will be directed to the first named signing inventor at the first copied address below until otherwise properly notified by the applicant.

There is an outstanding Office action mailed July 15, 2009 that requires a reply from the applicant.

Telephone inquiries concerning this decision should be directed to Tredelle Jackson at 571-272-2783.

Tredelle D. Jackson
Paralegal Specialist
Office of Petitions

cc: **ALWIN B. CARUS**
20 EAST QUINOBEQUIN
WABAN MA 02468

cc: **WOLF GREENFIELD & SACKS, P.C.**
600 ATLANTIC AVENUE
BOSTON, MA 02210-2206

UNITED STATES PATENT AND TRADEMARK OFFICE

Commissioner for Patents
United States Patent and Trademark Office
P.O. Box 1450
Alexandria, VA 22313-1450
www.uspto.gov

WONG, CABELLO, LUTSCH, RUTHERFORD
& BRUCCULERI, L.L.P.
20333 SH 249 6th Floor
HOUSTON TX 77070

MAILED

MAY 24 2010

OFFICE OF PETITIONS

In re Application of	:	
Eckhard U. **ALT** et al.	:	
Application No. 11/068,495	:	DECISION ON PETITION
Filed: February 28, 2005	:	TO WITHDRAW
Attorney Docket No. **20168/10005**	:	FROM RECORD
	:	

This is a decision on the Request to Withdraw as attorney or agent of record under 37 C.F.R. § 1.36(b), filed March 05, 2010.

The request is **NOT APPROVED**.

The Office will no longer accept address changes to a new practitioner or law firm filed with a Request, absent the filing of a power of attorney to the new representative. The Office will either change the correspondence address of record to the most current address information provided for the assignee of the entire interest who properly became of record under 37 CFR 3.71 or, if no assignee of the entire interest has properly been made of record under 37 CFR 3.71, the most current address information provided for the first named inventor.

Accordingly, the request to withdraw from record cannot be approved because the request does not include an acceptable current correspondence address for future communications from the Office.

All future communications from the Office will continue to be directed to the above-listed address until otherwise notified by applicant.

Telephone inquiries concerning this decision should be directed to the undersigned at 571-272-4231.

Michelle R. Eason
Paralegal Specialist
Office of Petitions

cc: **FISH & RICHARDSON P.C.**
P.O. BOX 1022
MINNEAPOLIS, MN 55440-1022

UNITED STATES PATENT AND TRADEMARK OFFICE

Commissioner for Patents
United States Patent and Trademark Office
P.O. Box 1450
Alexandria, VA 22313-1450
www.uspto.gov

ERIC B. MEYERTONS
MEYERTONS, HOOD, KIVLIN, KOWERT & GOETZEL, P.C.
P.O. BOX 398
AUSTIN TX 78767-0398

COPY MAILED

SEP 0 2 2005

OFFICE OF PETITIONS

In re Application of
Robert P. Madill Jr., et al.
Application No. 11/068,503
Filed: February 28, 2005
Attorney Docket No. 5053-64001

: DECISION ACCORDING STATUS
: UNDER 37 CFR 1.47(a)

This is in response to the petition filed August 26, 2005 (certificate of mail date, August 23, 2005) under 37 CFR 1.47(a).

The petition is **GRANTED**.

The above-identified application was filed on February 28, 2005, naming Robert P. Madill, Jr., Thomas Glenn Barger, James Lewis Rogers and Progress Qhaqhi Thabani Mtshali as joint inventors but without a signed declaration. Accordingly, on March 23, 2005, a "Notice To File Missing Parts of Application" was mailed, requiring *inter alia* a properly executed oath or declaration.

In response, an oath or declaration executed by all joint inventors except Madill Jr., the instant petition under 37 CFR 1.47(a) and a request for a three month extension of time was filed. The petition argues that joint inventor Madill Jr. refuses to sign the oath or declaration and thus by his actions, to cooperate with the filing of the instant application.

A grantable petition under 37 CFR 1.47(a) requires: (1) proof that the non-signing inventor cannot be reached or refuses to sign the oath or declaration after having been presented with the application papers (specification, claims and drawings); (2) an acceptable oath or declaration in compliance with 35 U.S.C. §§ 115 and 116; (3) the petition fee; and (4) a statement of the last known address of the non-signing inventor.

The petition bears proof that the application papers were sent to Mr. Madill Jr, and that he has not returned an executed copy of the oath or declaration. The above-identified application and papers have been reviewed and found in compliance with 37 CFR 1.47(a). In view thereof, this application is hereby accorded Rule 1.47(a) status.

Thus, as provided in Rule 1.47c, this Office will forward notice of this application's filing to the non-signing inventor at the address given in the petition. Notice of the filing of this application will also be published in the Official Gazette.

Please be advised that the fee for a petition under 37 CFR 1.47 is set at $200.00. As per the authorization found in the response, deposit account no. 50-1505 has been charged in the amount of $200.00. See 37 CFR 17(g).

This matter will be referred to the Office of Initial Patent Examination for further pre-examination in due course.

Telephone inquiries concerning this matter may be directed to the undersigned Petitions Attorney at (571) 272-3212.

Patricia Faison-Ball

Patricia Faison-Ball
Senior Petitions Attorney
Office of Petitions

UNITED STATES PATENT AND TRADEMARK OFFICE

Commissioner for Patents
United States Patent and Trademark Office
P.O. Box 1450
Alexandria, VA 22313-1450
www.uspto.gov

ROBERT P. MADILL, JR.
2929 BLOSSOM STREET
COLUMBIA, SC 29205

COPY MAILED

SEP 0 2 2005

OFFICE OF PETITIONS

In re Application of
Robert P. Madill, Jr.
Application No. 11/068,503
Filed: February 28, 2005
Title of Invention: SYSTEMS AND METHODS FOR ASSESSING THE POTENTIAL FOR FRAUD IN BUSINESS TRANSACTIONS

Dear Mr. Madill Jr.:

You are named as a joint inventor in the above identified United States patent application, filed under the provisions of 35 U.S.C. 116 (United States Code), and 37 CFR 1.47(a), Rules of Practice in Patent Cases. Should a patent be granted on the application you will be designated therein as a joint inventor.

As a named inventor you are entitled to inspect any paper in the file wrapper of the application, order copies of all or any part thereof (at a prepaid cost per 37 CFR 1.19) or make your position of record in the application. Alternatively, you may arrange to do any of the preceding through a registered patent attorney or agent presenting written authorization from you. If you care to join the application, counsel of record (see below) would presumably assist you. Joining in the application would entail the filing of an appropriate oath or declaration by you pursuant to 37 CFR 1.63.

Telephone inquiries regarding this communication should be directed to the undersigned Petitions Attorney at (571) 272-3212. Requests for information regarding your application should be directed to the File Information Unit at 703/308-2733. Information regarding how to pay for and order a copy of the application, or a specific paper in the application, should be directed to Certification Division at 703/308-9726 or 1-800-972-6382 (outside the Washington D.C. area).

Patricia Faison-Ball

Patricia Faison-Ball
Senior Petitions Attorney
Office of Petitions

cc:

ERIC B. MEYERTONS
MEYERTONS, HOOD, KIVLIN, KOWERT & GOETZEL, P.C.
P.O. BOX 398
AUSTIN TX 78767-0398

UNITED STATES PATENT AND TRADEMARK OFFICE

Commissioner for Patents
United States Patent and Trademark Office
P.O. Box 1450
Alexandria, VA 22313-1450
www.uspto.gov

MOTOROLA, INC.
1303 EAST ALGONQUIN ROAD
IL01/3RD
SCHAUMBURG IL 60196

COPY MAILED

AUG 3 1 2009

OFFICE OF PETITIONS

In re Application of	:	
Willins et al.	:	
Application No. 11/068,510	:	ON PETITION
Filed: February 28, 2005	:	
Attorney Docket No. SBL01945	:	

This is a decision on the petition under 37 C.F.R. § 1.137(b), filed July 2, 2009, to revive the above-identified application.

The petition is **GRANTED**.

The petition satisfies the requirements of 37 CFR 1.137(b) in that petitioner has supplied (1) the reply in the form of the Issue Fee Transmittal with payment of the issue and publication fees, (2) the petition fee, and (3) a proper statement of unintentional delay.

Telephone inquiries concerning this decision should be directed to the undersigned at (571) 272-3206.

This matter is being referred to the Office of Data Management for processing into a patent.

Liana Walsh
Petitions Examiner
Office of Petitions

UNITED STATES PATENT AND TRADEMARK OFFICE

Commissioner for Patents
United States Patent and Trademark Office
P.O. Box 1450
Alexandria, VA 22313-1450
www.uspto.gov

MICHAEL.BEST & FRIEDRICH LLP
100 E WISCONSIN AVENUE
Suite 3300
MILWAUKEE WI 53202

COPY MAILED

NOV 0 5 2008

OFFICE OF PETITIONS

In re Application of :
Hayes, et al :
Application No. 11/068,516 :
Filed: February 28, 2005 :
Attorney Docket No. 018778-9243-00 :

ON PETITION

This is a decision on the petition, filed September 24, 2008, which is being treated under 37 CFR 1.183 to waive 37 CFR 1.131 to the extent that it requires that all of the named inventors execute the declaration filed thereunder.

Deposit account no. 50-1965 will be charged the required $400.00 petition fee.

The petition is **granted** to the extent *infra*.

Petitioner asserts that, while all of the named inventors contributed to the conception of the claimed invention which is under rejection, only inventor John W. Hayes has agreed to execute the attached declaration under 37 CFR 1.131 in support of activity between October 6, 2004 and January 27, 2005.

As noted in MPEP 715.04, an adequate showing may lead to acceptance of a declaration under 37 CFR 1.131 executed by less than all the named inventors of the claimed subject matter in question.[1] Under the facts presented, it is agreed that justice requires waiver of the rules to the extent that they require Keith D. Heigl to declare. However, the favorable decision herein does not relieve applicant from his burden to establish that the invention was completed before the date of the references and that the claimed invention was the product of the joint inventors. See In re Carlson, 79 F.2d. 900, 27 USPQ 400 (CCPA 1935).

This application is being referred to Technology Center AU 3651 for further examination on the merits.

The application file does not indicate a change of address has been filed in this case, although the address given on the petition differs from the address of record. A change of address should be

[1] If a petition under 37 CFR 1.47 was granted or the application was accepted under 37 CFR 1.42 or 1.43, the affidavit or declaration may be signed by the 37 CFR 1.47 applicant or the legal representative, where appropriate. *See* MPEP 715.04(C).

filed in this case in accordance with MPEP 601.03. A courtesy copy of this decision is being mailed to the address noted on the petition. However, until otherwise instructed, all future correspondence regarding this application will be mailed solely to the address of record.

Inquiries regarding this communication may be directed to the undersigned at (571) 272-3230. Inquiries concerning the examination or status of the application should be directed to the Technology Center.

Shirene Willis Brantley

Shirene Willis Brantley
Senior Petitions Attorney
Office of Petitions

CC: MICHAEL BEST & FRIEDRICH LLP
TWO PRUDENTIAL PLAZA
180 N. STETSON, SUITE 2000
CHICAGO IL 60601

UNITED STATES PATENT AND TRADEMARK OFFICE

UNITED STATES DEPARTMENT OF COMMERCE
United States Patent and Trademark Office
Address: COMMISSIONER FOR PATENTS
P.O. Box 1450
Alexandria, Virginia 22313-1450
www.uspto.gov

Microsoft Corporation
One Microsoft Way
Redmond, WA 98052

Mail Date: 04/21/2010

Applicant	: Andrew W. Walters	: DECISION ON REQUEST FOR
Patent Number	: 7587526	: RECALCULATION of PATENT
Issue Date	: 09/08/2009	: TERM ADJUSTMENT IN VIEW
Appliction No	: 11/068,537	: OF WYETH AND NOTICE OF INTENT TO
Filed	: 02/28/2005	: ISSUE CERTIFICATE OF CORRECTION
		:

The Request for Recalculation is **GRANTED** to the extent indicated.

The patent term adjustment has been determined to be **506** days. The USPTO will *sua sponte* issue a certificate of correction reflecting the amount of PTA days determined by the recalculation.

Prior to the issuance of the certificate of correction, the USPTO will afford patentee an opportunity to be heard and request reconsideration. Accordingly, patentee has **one month or thirty (30) days**, whichever is longer, to file a request for reconsideration of this patent term adjustment calculation. See 35 U.S.C. 154(b)(3)(B)(ii) and 37 CFR 1.322(a)(4). No extensions of time will be granted under 37 CFR 1.136.

Patentee should use document code PET.OP if electronically filing a request for reconsideration of this patent term adjustment calculation. The patentee must also include the information required by 37 CFR 1.705(b)(2) and the fee required by 37 CFR 1.18(e). If patentee does not file a timely request for reconsideration of this patent term adjustment calculation including the information required by 37 CFR 1.705(b)(2) and the fee required by 37 CFR 1.18(e), the USPTO will issue a certificate of correction reflecting the PTA determination noted above.

Patentee should be aware that in order to preserve the right to review in the United States District Court for the District of Columbia of the USPTO patent term adjustment determination, patentee must ensure that he or she also take the steps required under 35 U.S.C. 154(b)(4)(A) in a timely manner. Nothing in the request for recalculation should be construed as providing an alternative time frame for commencing a civil action under 35 U.S.C. 154(b)(4)(A).

Any questions concerning this decision should be directed to the Office of Patent Legal Administration at 571-272-7702.

UNITED STATES PATENT AND TRADEMARK OFFICE

Commissioner for Patents
United States Patent and Trademark Office
P.O. Box 1450
Alexandria, VA 22313-1450
www.uspto.gov

Townsend and Townsend and Crew, LLP
Two Embarcadero Center
Eighth Floor
San Francisco, CA 94111-3834

COPY MAILED

MAY 16 2008

OFFICE OF PETITIONS

In re Application of	:	
James Zucherman et al.	:	
Application No. 11/068,554	:	DECISION ON PETITION
Filed: February 28, 2005	:	TO WITHDRAW
Attorney Docket No. 19433A-004030S	:	FROM RECORD
	:	

This is a decision on the Request to Withdraw as attorney or agent of record under 37 C.F.R. § 1.36(b), filed November 14, 2007.

The request is **NOT APPROVED** as moot.

A review of the file record indicates that the power of attorney to Mark D. Barrish and all attorneys/agents associated with customer number 20350 has been revoked by the assignee of the patent application on December 13, 2007. Accordingly, the request to withdraw under 37 C.F.R. § 1.36(b) is moot.

All future communications from the Office will continue to be directed to the below-listed address until otherwise notified by applicant.

Telephone inquires concerning this decision should be directed to Kimberly Inabinet at 571-272- 4618.

Kimberly Inabinet
Petitions Examiner
Office of Petitions

cc: Coats & Bennett/Medtronics
1400 Crescent Green
Suite 300
Cary, NC 27518

2 3 MAY 2007

UNITED STATES PATENT AND TRADEMARK OFFICE

COMMISSIONER FOR PATENTS
UNITED STATES PATENT AND TRADEMARK OFFICE
P.O. BOX 1450
ALEXANDRIA, VA 22313-1450
www.uspto.gov

Matthew E. Burr
Lake Austin Marina
2219 Westlake Drive
Suite 200
Austin TX 78746

In re Application of:	:	
JAING, Baofeng, et al		
Application No.: 11/068,559	:	DECISION
Filing Date: 28 February 2005	:	UNDER
Atty Docket No.: 19862.20	:	37 CFR 1.10(e)
For: LARGE VOLUME DATA MANAGEMENT	:	

This decision is in response to applicants' "Petition To Consider Correspondence Filed in The Office On The USPS Deposit Date Under 37 CFR 1.10(e)" filed 28 August 2006. No petition fee is required.

BACKGROUND

On 28 February 2005, applicants filed materials to initiate a U.S. non-provisional application, including a "Utility Patent Application Transmittal Letter" (Form PTO/SB/05), 7 pages of specification, 3 pages of claims, 2 pages of drawings and a one page abstract. The materials were assigned U.S. application number 11/068,559.

On 05 April 2005, the United States Patent and Trademark Office (USPTO) mailed a "Notice to File Missing Parts" requiring a submission of an oath or declaration and basic filing fees.

On 06 June 2005, applicants filed an executed declaration and the required fee payment.

On 27 February 2006, applicants filed, in a single "Express Mail" envelope, a copy of the materials filed or issued in the present U.S. application (i.e., the description, claims, drawings, and abstract; the filing receipts, the Notice to File Missing Parts, the declaration, the fee transmittal letter, a power of attorney, and the Form PTO/SB/05 transmittal letter), accompanied by a three page PCT Request (Form PCT/RO/101). These materials specifically referenced U.S. application number 11/068,559; accordingly, the materials were placed in the present application file, 11/068,559.

On 28 August 2006, applicants filed a Petition To Consider Correspondence Filed in The Office On The USPS Deposit Date Under 37 CFR 1.10(e). The petition requests confirmation of the 27 February 2006 filing of the materials listed above. The petition also appears to desire establishment of a separate PCT application based on the 27 February 2006 filing. The petition includes, *inter alia,* copies of the papers filed 27 February 2006.

DISCUSSION

Pursuant to 37 CFR 1.10(e), an applicant may petition the USPTO to treat materials filed via "Express Mail" that are not received by the USPTO as properly filed on the date of deposit with the USPS. However, in the present case, all the materials filed by applicants 27 February 2006 have been received by the USPTO and accorded the filing date of 28 February 2005. The petition under 37 CFR 1.10(e) seeking the acceptance of these documents with a 27 February 2006 is therefore moot.

With respect to the treatment of 27 February 2006 filing, applicant apparently seeks to have these materials treated as a separate PCT application claiming priority to the present U.S. non-provisional application and having an international filing date of 27 February 2006. However, as noted above, the materials filed 27 February 2006 included, *inter alia*, both a PCT Request form (intended for use with a new international application) and a Form PTO/SB/05 transmittal letter (intended for use with a new U.S. application under 37 CFR 1.53(b)). The submission therefore included conflicting instructions.

In order for any of the materials filed by applicants on 27 February 2006 to be treated as a separate PCT application filed on such date, applicants must first file a grantable petition under 37 CFR 1.182, with the required petition fee, adequately demonstrating that the 27 February 2006 filing should properly be treated as a separate PCT international application filed on such date.

CONCLUSION

Applicants' petition under 37 CFR 1.10(e) to confirm the 27 February 2006 is **DISMISSED** as moot. The materials filed 27 February 2006 remain in the present U.S. application file.

As discussed above, in order for any of the materials contained in the 27 February 2006 submission to be treated as a separate international application filed on such date, a grantable petition under 37 CFR 1.182 must be submitted which adequately resolves the conflicting instructions contained in the 27 February 2006 submission and demonstrates that the materials filed are properly treated as an international application.

Please direct further correspondence with respect to this matter to Mail Stop PCT, Commissioner for Patents, Office of Legal Administration, P.O. Box 1450, Alexandria, Virginia 22313-1450, with the contents of the letter marked to the attention of the Office of PCT Legal Administration.

Bena Miller
PCT Legal Examiner Detailee
Office of PCT Legal Administration

Richard Cole
PCT Legal Examiner
PCT Legal Office

UNITED STATES PATENT AND TRADEMARK OFFICE

COMMISSIONER FOR PATENTS
UNITED STATES PATENT AND TRADEMARK OFFICE
P.O. BOX 1450
ALEXANDRIA, VA 22313-1450
www.uspto.gov
DIW Aug-07

EDWIN R. ACHESON, JR.
FROST BROWN TODD LLC
2200 PNC CENTER
201 E. 5TH STREET
CINCINNATI OH 45202

COPY MAILED

AUG 0 8 2007

OFFICE OF PETITIONS

In re Application of :
Heit et al. :
Application Number: 11/068571 : DECISION ON PETITION
Filing Date: 02/28/2005 :
Attorney Docket Number: :
0100352.0517299 :

This is a decision on the petition filed on 8 May, 2007, under 37 CFR 1.137(b),[1] to revive the above-identified application.

The petition is **GRANTED**.

The application became abandoned on 16 December, 2005, for failure to timely file a reply to the non-final Office action mailed on 15 September, 2005, which set a three (3) month shortened statutory period for reply. No extensions of the time for reply in accordance with 37 CFR 1.136(a) were obtained. Notice of Abandonment was mailed on 13 April, 2006.

Receipt of the amendment filed on 8 May, 2007, is acknowledged.

---

[1] Effective December 1, 1997, the provisions of 37 CFR 1.137(b) now provide that where the delay in reply was unintentional, a petition may be filed to revive an abandoned application or a lapsed patent pursuant to 37 CFR 1.137(b). A grantable petition filed under the provisions of 37 CFR 1.137(b) must be accompanied by:

(1) the required reply, unless previously filed. In a nonprovisional application abandoned for failure to prosecute, the required reply may be met by the filing of a continuing application. In a nonprovisional utility or plant application filed on or after June 8, 1995, and abandoned for failure to prosecute, the required reply may also be met by the filing of a request for continuing examination in compliance with § 1.114. In an application or patent, abandoned or lapsed for failure to pay the issue fee or any portion thereof, the required reply must be the payment of the issue fee or any outstanding balance thereof. In an application, abandoned for failure to pay the publication fee, the required reply must include payment of the publication fee.

(2) the petition fee as set forth in 37 CFR 1.17(m);

(3) a statement that the entire delay in filing the required reply from the due date for the reply until the filing of a grantable petition pursuant to 37 CFR 1.137(b) was unintentional. The Commissioner may required additional information where there is a question whether the delay was unintentional; and

(4) any terminal disclaimer (and fee as set forth in 37 CFR 1.20(d)) required pursuant to 37 CFR 1.137(c)).

The application is being referred to Technology Center Art Unit 3651 for further processing.

Telephone inquiries concerning this matter may be directed to the undersigned at (571)272-3231.

D Wood

Douglas I. Wood
Senior Petitions Attorney
Office of Petitions

UNITED STATES PATENT AND TRADEMARK OFFICE

Commissioner for Patents
United States Patent and Trademark Office
P.O. Box 1450
Alexandria, VA 22313-1450
www.uspto.gov

EDWIN R. ACHESON, JR.
FROST BROWN TODD LLC
2200 PNC CENTER
201 E. 5TH STREET
CINCINNATI, OH 45202

COPY MAILED
SEP 17 2008

In re Application of	:	
Heit et al.	:	
Application No. 11/068,571	:	DECISION ON PETITION
Filed: February 28, 2005	:	
Attorney Docket No. 0100352.0517299	:	

This is a decision on the petition under the unintentional provisions of 37 CFR 1.137(b), filed July 15, 2008, to revive the above-identified application.

The petition is **GRANTED**.

This application became abandoned for failure to timely pay the issue and publication fees on or before July 7, 2008, as required by the Notice of Allowance and Fee(s) Due mailed April 7, 2008. Accordingly, the date of abandonment of this application is July 8, 2008. A Notice of Abandonment was mailed July 22, 2008.

The petition satisfies the requirements of 37 CFR 1.137(b) in that petitioner has supplied (1) the reply in the form of payment of the issue fee of $720.00 and the publication fee of $300.00, (2) the petition fee of $770.00; and (3) a proper statement of unintentional delay.

Telephone inquiries concerning this decision should be directed to Joan Olszewski at (571) 272-7751.

This application is being referred to the Office of Data Management for processing into a patent.

Liana Walsh
Petitions Examiner
Office of Petitions

UNITED STATES PATENT AND TRADEMARK OFFICE

Commissioner for Patents
United States Patent and Trademark Office
P.O. Box 1450
Alexandria, VA 22313-1450
www.uspto.gov

G. L. LOOMIS & ASSOCIATES, INC.
990 HIGHLAND DRIVE
SUITE 212Q
SOLANA BEACH CA 92075

COPY MAILED

OCT 15 2009

OFFICE OF PETITIONS

In re Application of	:	
Gary L. Loomis	:	
Application No. 11/068,580	:	ON PETITION
Filed: February 28, 2005	:	
Attorney Docket No. GLL05001	:	

This is a decision on the petition under the unintentional provisions of 37 CFR 1.137(b), filed July 16, 2009, to revive the above-identified application.

The petition is **DISMISSED**.

Any request for reconsideration of this decision must be submitted within TWO (2) MONTHS from the mail date of this decision. Extensions of time under 37 CFR 1.136(a) are permitted. The reconsideration request should include a cover letter entitled "Renewed Petition under 37 CFR 1.137(b)." This is **not** a final agency action within the meaning of 5 U.S.C. § 704.

The application became abandoned for failure to timely reply within the meaning of 37 CFR 1.113 to the final Office action, mailed June 9, 2008, which set a shortened statutory period for reply of three (3) months. No extensions of time under the provisions of 37 CFR 1.136(a) was obtained. Accordingly, the application became abandoned on September 10, 2008. The Notice of Abandonment was mailed January 26, 2009.

A grantable petition under 37 CFR 1.137(b) must be accompanied by: (1) the required reply, unless previously filed; (2) the petition fee as set forth in 37 CFR 1.17(m); (3) a statement that the entire delay in filing the required reply from the due date for the reply until the filing of a grantable petition pursuant to 37 CFR 1.137(b) was unintentional; and (4) any terminal disclaimer (and fee as set forth in 37 CFR 1.20(d)) required by 37 CFR 1.137(d). Where there is a question as to whether either the abandonment or the delay in filing a petition under 37 CFR 1.137 was unintentional, the Director may require additional information. See MPEP 711.03(c)(II)(C) and (D). The instant petition lacks item(s) (1).

The proposed reply required for consideration of a petition to revive must be a Notice of Appeal (and appeal fee required by 37 CFR 41.20(b)(2), an amendment that prima facie places the application in condition for allowance, a Request for Continued Examination and submission (37 CFR 1.114), or the filing of a continuing application under 37 CFR 1.53(b). See MPEP 711.03(c)(III)(A)(2). The amendment filed herewith petition ***does not*** prima facie place the application in condition for allowance.

An extension of time under 37 CFR 1.136 must be filed prior to the expiration of the maximum extendable period for reply. See In re Application of S., 8 USPQ2d 1630, 1631 (Comm'r Pats. 1988). Since the $555 extension of time fee submitted with the petition on July 16, 2009 was subsequent to the maximum extendable period for reply, this fee is unnecessary and will be credited to petitioner's deposit account.

Further correspondence with respect to this matter should be addressed as follows:

By Mail: Mail Stop PETITION
Commissioner for Patents
P. O. Box 1450
Alexandria, VA 22313-1450

By hand: U. S. Patent and Trademark Office
Customer Service Window, Mail Stop Petitions
Randolph Building
401 Dulany Street
Alexandria, VA 22314

The centralized facsimile number is **(571) 273-8300.**

Telephone inquiries concerning this decision should be directed to the undersigned at (571) 272-2991.

Terri Johnson

Terri Johnson
Petitions Examiner
Office of Petitions

Enclosed: Examiner's Advisory Action PTOL-303

Advisory Action Before the Filing of an Appeal Brief	Application No.	Applicant(s)	
	11/068,580	LOOMIS, GARY L.	
	Examiner	Art Unit	
	JAMES W. ROGERS	1618	

--The MAILING DATE of this communication appears on the cover sheet with the correspondence address --

THE REPLY FILED 16 July 2009 FAILS TO PLACE THIS APPLICATION IN CONDITION FOR ALLOWANCE.

1. ☒ The reply was filed after a final rejection, but prior to or on the same day as filing a Notice of Appeal. To avoid abandonment of this application, applicant must timely file one of the following replies: (1) an amendment, affidavit, or other evidence, which places the application in condition for allowance; (2) a Notice of Appeal (with appeal fee) in compliance with 37 CFR 41.31; or (3) a Request for Continued Examination (RCE) in compliance with 37 CFR 1.114. The reply must be filed within one of the following time periods:
   a) ☒ The period for reply expires 3 months from the mailing date of the final rejection.
   b) ☐ The period for reply expires on: (1) the mailing date of this Advisory Action, or (2) the date set forth in the final rejection, whichever is later. In no event, however, will the statutory period for reply expire later than SIX MONTHS from the mailing date of the final rejection.
   Examiner Note: If box 1 is checked, check either box (a) or (b). ONLY CHECK BOX (b) WHEN THE FIRST REPLY WAS FILED WITHIN TWO MONTHS OF THE FINAL REJECTION. See MPEP 706.07(f).

Extensions of time may be obtained under 37 CFR 1.136(a). The date on which the petition under 37 CFR 1.136(a) and the appropriate extension fee have been filed is the date for purposes of determining the period of extension and the corresponding amount of the fee. The appropriate extension fee under 37 CFR 1.17(a) is calculated from: (1) the expiration date of the shortened statutory period for reply originally set in the final Office action; or (2) as set forth in (b) above, if checked. Any reply received by the Office later than three months after the mailing date of the final rejection, even if timely filed, may reduce any earned patent term adjustment. See 37 CFR 1.704(b).

NOTICE OF APPEAL

2. ☐ The Notice of Appeal was filed on _____. A brief in compliance with 37 CFR 41.37 must be filed within two months of the date of filing the Notice of Appeal (37 CFR 41.37(a)), or any extension thereof (37 CFR 41.37(e)), to avoid dismissal of the appeal. Since a Notice of Appeal has been filed, any reply must be filed within the time period set forth in 37 CFR 41.37(a).

AMENDMENTS

3. ☒ The proposed amendment(s) filed after a final rejection, but prior to the date of filing a brief, will not be entered because
   (a) ☒ They raise new issues that would require further consideration and/or search (see NOTE below);
   (b) ☐ They raise the issue of new matter (see NOTE below);
   (c) ☐ They are not deemed to place the application in better form for appeal by materially reducing or simplifying the issues for appeal; and/or
   (d) ☐ They present additional claims without canceling a corresponding number of finally rejected claims.
   NOTE: *Applicants amendments to the claims would necessitate a new search and/or consideration because previously the new limitations within new claim 22 that requires that no thickening agent is added, the use of ultraviolet radiation and maintaining an inert gas atmosphere within the closed system were not presented within the previous claim set*. (See 37 CFR 1.116 and 41.33(a)).
4. ☐ The amendments are not in compliance with 37 CFR 1.121. See attached Notice of Non-Compliant Amendment (PTOL-324).
5. ☐ Applicant's reply has overcome the following rejection(s): _____.
6. ☐ Newly proposed or amended claim(s) _____ would be allowable if submitted in a separate, timely filed amendment canceling the non-allowable claim(s).
7. ☒ For purposes of appeal, the proposed amendment(s): a) ☒ will not be entered, or b) ☐ will be entered and an explanation of how the new or amended claims would be rejected is provided below or appended.
   The status of the claim(s) is (or will be) as follows:
   Claim(s) allowed: _____.
   Claim(s) objected to: _____.
   Claim(s) rejected: *1-10 and 12-21*.
   Claim(s) withdrawn from consideration: _____.

AFFIDAVIT OR OTHER EVIDENCE

8. ☐ The affidavit or other evidence filed after a final action, but before or on the date of filing a Notice of Appeal will not be entered because applicant failed to provide a showing of good and sufficient reasons why the affidavit or other evidence is necessary and was not earlier presented. See 37 CFR 1.116(e).
9. ☐ The affidavit or other evidence filed after the date of filing a Notice of Appeal, but prior to the date of filing a brief, will not be entered because the affidavit or other evidence failed to overcome all rejections under appeal and/or appellant fails to provide a showing a good and sufficient reasons why it is necessary and was not earlier presented. See 37 CFR 41.33(d)(1).
10. ☐ The affidavit or other evidence is entered. An explanation of the status of the claims after entry is below or attached.

REQUEST FOR RECONSIDERATION/OTHER

11. ☐ The request for reconsideration has been considered but does NOT place the application in condition for allowance because: _____.
12. ☐ Note the attached Information *Disclosure Statement*(s). (PTO/SB/08) Paper No(s). _____
13. ☐ Other: _____.

UNITED STATES PATENT AND TRADEMARK OFFICE

Commissioner for Patents
United States Patent and Trademark Office
P.O. Box 1450
Alexandria, VA 22313-1450
www.uspto.gov

G. L. LOOMIS & ASSOCIATES, INC.
990 HIGHLAND DRIVE
SUITE 212Q
SOLANA BEACH CA 92075

MAILED

JAN 28 2010

OFFICE OF PETITIONS

In re Application of	:	
Gary L. Loomis	:	
Application No. 11/068,580	:	ON PETITION
Filed: February 28, 2005	:	
Attorney Docket No. GLL05001	:	

This is a decision on the renewed petition under the unintentional provisions of 37 CFR 1.137(b), filed December 15, 2009, to revive the above-identified application.

The petition is **GRANTED**.

The application became abandoned for failure to timely file a reply within the meaning of 37 CFR 1.113 to the final Office action of June 9, 2008. The proposed reply required for consideration of a petition to revive must be a Notice of Appeal (and appeal fee required by 37 CFR 41.20(b)(2), an amendment that *prima facie* places the application in condition for allowance, a Request for Continued Examination and submission (37 CFR 1.114), or the filing of a continuing application under 37 CFR 1.53(b). See MPEP 711.03(c)(III)(A)(2). No extensions of time pursuant to the provisions of 37 CFR 1.136(a) was obtained. Accordingly, the date of abandonment of this application is September 10, 2008. The Notice of Abandonment was mailed January 26, 2009.

The petition satisfies the requirements of 37 CFR 1.137(b) in that petitioner has supplied (1) the reply in the form of a Request for Continued Examination (RCE) and fee of $405, and the submission required by 37 CFR 1.114; (2) the petition fee of $810; and (3) a proper statement of unintentional delay.

Telephone inquiries concerning this decision should be directed to the undersigned at (571) 272-2991.

The application is being referred to Technology Center AU 1618 for processing of the RCE and for appropriate action by the Examiner in the normal course of business on the amendment submitted in accordance with 37 CFR 1.114.

Terri Johnson
Petitions Examiner
Office of Petitions

UNITED STATES PATENT AND TRADEMARK OFFICE

Commissioner for Patents
United States Patent and Trademark Office
P.O. Box 1450
Alexandria, VA 22313-1450
www.uspto.gov

HAYNES AND BOONE, LLP
901 MAIN STREET, SUITE 3100
DALLAS TX 75202

COPY MAILED

AUG 15 2007

OFFICE OF PETITIONS

In re Application of

COOK, et al.
Application No. 11/068,595
Filed: February 28, 2005
Attorney Docket No. **25791.349**

DECISION ON PETITION
TO WITHDRAW
FROM RECORD

This is a decision on the Request to Withdraw as attorney or agent of record under 37 C.F.R. § 1.36(b), filed April 19, 2007.

The request is **NOT APPROVED.**

A grantable request to withdraw as attorney/agent of record must be signed by every attorney/agent seeking to withdraw or contain a clear indication that one attorney is signing on behalf of another/others. A request to withdraw will not be approved unless at least 30 (thirty) days would remain between the date of approval and the later of the expiration date of a time to file a response or the expiration date of the maximum time period which can be extended under 37 C.F.R. § 1.136(a).

The request cannot be approved because no reasons for withdrawal have been provided. The Office cannot, at this time, determine whether practitioner's request is one of the mandatory or permissive reasons enumerated in 37 CFR 10.40. Any subsequent requests must include reasons for withdrawal. Please note that there is a space provided for on PTO/SB/83 (Request to Withdraw as Attorney or Agent) to supply practitioner's reasons.

All future communications from the Office will continue to be directed to the above-listed address until otherwise notified by applicant.

Telephone inquiries concerning this decision should be directed to the undersigned at 571-272-7253.

Monica A. Graves
Petitions Examiner
Office of Petitions

cc: TODD MATTINGLY
KING & SPALDING LLP
1100 LOUISIANA STREET, SUITE 4000
HOUSTON, TX 77002

UNITED STATES PATENT AND TRADEMARK OFFICE

Commissioner for Patents
United States Patent and Trademark Office
P.O. Box 1450
Alexandria, VA 22313-1450
www.uspto.gov

APR - 7 2005

ROBERT W STROZIER, P.L.L.C
PO BOX 429
BELLAIRE TX 77402-0429

In re Application of	:
West et al.	:
Serial No.: 11/068,602	: PETITION TO MAKE SPECIAL
Filed: February 28, 2005	:
Attorney Docket No.: 99015/02CIP	:

This is in response to applicants' petition filed February 28, 2005, to make the above-identified application special under the provisions of 37 CFR 1.102(d).

Applicants have not satisfied the provisions set forth in M.P.E.P. 708.02, II, (A), (B), and (C). Specifically, applicants failed to provide a statement that (A) That there is an infringing device or product actually on the market or method in use; (B) That a rigid comparison of the alleged infringing device, product, or method with the claims of the application has been made, and that, in his or her opinion, some of the claims are unquestionably infringed; and (C) That he or she has made or caused to be made a careful and thorough search of the prior art or has a good knowledge of the pertinent prior art.

Applicants must also provide one copy of each of the references deemed most closely related to the subject matter encompassed by the claims if said references are not already of record. See MPEP 708.02 II for a complete explanation.

The $130.00 petition fee as required by 37 CFR 1.17(h) will be charged to applicant's Deposit Account No. 50-1518, as directed.

The petition is **DENIED**. Any new or renewed petition must be filed within TWO MONTHS of the mail date of this decision.

Should there be any questions with regard to this letter please contact Marianne C. Seidel by letter addressed to the Director, Technology Center 1600, P.O. Box 1450, Alexandria, VA 22313-1450, or by telephone at 571-272-0584 or by facsimile transmission at the general Office facsimile number, (703) 872-9306.

Marianne C. Seidel

Marianne C. Seidel
Special Program Examiner
Technology Center 1600

UNITED STATES PATENT AND TRADEMARK OFFICE

COMMISSIONER FOR PATENTS
UNITED STATES PATENT AND TRADEMARK OFFICE
P.O. BOX 1450
ALEXANDRIA, VA 22313-1450
www.uspto.gov

AT&T CORP.
ROOM 2A207
ONE AT&T WAY
BEDMINSTER, NJ 07921

COPY MAILED
AUG 19 2008

In re Application of	:	
Irwin Gerszberg, et al.	:	
Application No. 11/068,605	:	ON PETITION
Filed: February 28, 2005	:	
Attorney Docket No.: 112813CON2	:	

This is a decision on the petition, filed August 14, 2008, under 37 CFR 1.313(c)(2) to withdraw the above-identified application from issue after payment of the issue fee.

The petition is not signed by an attorney of record. However, in accordance with 37 CFR 1.34(a), the signature of Robert T. Canavan appearing on the correspondence shall constitute a representation to the United States Patent and Trademark Office that he is authorized to represent the particular party on whose behalf he acts. A courtesy copy of this decision is being mailed to Mr. Canavan, the petitioner herein. However, if Mr. Canavan desires to receive future correspondence regarding this file, the appropriate power of attorney documents must be submitted. All future correspondence regarding this application file will be directed solely to the above-noted correspondence address of record.

The petition is **GRANTED**.

The above-identified application is withdrawn from issue for consideration of a submission under 37 CFR 1.114 (request for continued examination). See 37 CFR 1.313(c)(2).

Petitioner is advised that the issue fee paid on July 28, 2008 in the above-identified application cannot be refunded. If, however, the above-identified application is again allowed, petitioner may request that it be applied towards the issue fee required by the new Notice of Allowance.[1]

Telephone inquiries relating to this decision should be directed to the undersigned at (571) 272-3204.

---

[1] *The request to apply the issue fee to the new Notice may be satisfied by completing and returning the new Part B – Fee(s) Transmittal Form (along with any balance due at the time of submission). Petitioner is advised that the Issue Fee Transmittal Form must be completed and timely submitted to avoid abandonment of the application.*

The application is being referred to Technology Center AU 1796 for processing of the request for continued examination under 37 CFR 1.114.

Sherry D. Brinkley
Petitions Examiner
Office of Petitions

cc: CANAVAN,ROBERT
CANAVAN & MONKA LLC
62 GROVE STREET
SOMERVILLE, NJ 08876

UNITED STATES PATENT AND TRADEMARK OFFICE

Commissioner for Patents
United States Patent and Trademark Office
P.O. Box 1450
Alexandria, VA 22313-1450
www.uspto.gov

MAILED

JUN 1 0 2005

Director's Office
Group 3700

Donald E. Donnelly
1332 Remington Oaks Terr.
Fenton, MO 63026

In re application of Donald E. Donnelly	: :	**DECISION ON PETITION** **TO MAKE SPECIAL**
	:	**UNDER 37 CFR. 1.102(c)**
Serial Number: 11/068,607 Filed: February 28, 2005	: :	

For: **APPARATUS & METHOD FOR SHUTTING DOWN FUEL FIRED APPLIANCE**

This is a decision on the petition filed on February 28, 2005, under 37 CFR. 1.102(c) to make special the above identified application because of the age/health of the applicant. Since the requirements of the M.P.E.P Section 708.02 IV have been met, the petition will be GRANTED.

The examiner is directed (1) to make an interference search for possible interfering applications, (2) to promptly examine this application out of turn, and (3) if any interfering application is discovered, to examine such application simultaneously and state in the first official letter of such application that it is being taken out of turn because of a possible interference.

Petitioner is advised that this application will continue to be special, throughout its entire prosecution and pendency, including interference or appeal, if any, only is Petitioner makes a prompt bona-fide effort, in response to each Office action, to place the application in condition for allowance, even if it is necessary to conduct an interview with the Examiner to accomplish this purpose.

Summary: Decision on Petition **GRANTED**.

Richard A. Bertsch
Director
Technology Center 3700
(571) 272-3750

rt: 6/9/05

UNITED STATES PATENT AND TRADEMARK OFFICE

Commissioner for Patents
United States Patent and Trademark Office
P.O. Box 1450
Alexandria, VA 22313-1450
www.uspto.gov

COPY MAILED
NOV 17 2006
OFFICE OF PETITIONS

BSH HOME APPLIANCES CORPORATION
INTELLECTUAL PROPERTY DEPARTMENT
100 BOSCH BOULEVARD
NEW BERN NC 28562

In re Application of	:	
Gerd WILSDORF	:	DECISION ON PETITION
Application No. 11/068,643	:	UNDER 37 CFR 1.78(a)(3)
Filed: February 28, 2005	:	
Attorney Docket No. 2002P00983WOUS	:	

This is a decision on the petition under 37 CFR 1.78(a)(3), filed April 28, 2006, to accept an unintentionally delayed claim under 35 U.S.C. § 120 and 365(c) for the benefit of priority to prior-filed PCT Application No. PCT/EP03/09240, filed August 20, 2003, set forth in the accompanying Application Data Sheet (ADS) (the international application number is referred to in the petition and ADS as PCT/EP2003/009240).

The petition under 37 CFR 1.78(a)(3) is **GRANTED.**

A petition for acceptance of a claim for late priority under 37 CFR 1.78(a)(3) is only applicable to those applications filed on or after November 29, 2000. Further, the petition is appropriate only after the expiration of the period specified in 37 CFR 1.78(a)(2)(ii). In addition, the petition under 37 CFR 1.78(a)(3) must be accompanied by:

(1) the reference required by 35 U.S.C. § 120 and 37 CFR 1.78(a)(2)(i) of the prior-filed application, unless previously submitted;
(2) the surcharge set forth in § 1.17(t); and
(3) a statement that the entire delay between the date the claim was due under 37 CFR 1.78(a)(2)(ii) and the date the claim was filed was unintentional. The Commissioner may require additional information where there is a question whether the delay was unintentional.

All the above requirements having been satisfied, the late claim for priority under 35 U.S.C. § 120 and 365(c) is accepted as being unintentionally delayed.

The granting of the petition to accept the delayed benefit claim to the prior-filed application under 37 CFR 1.78(a)(3) should not be construed as meaning that the application is entitled to the benefit of the prior-filed application. In order for the application to be entitled to the

benefit of the prior-filed application, all other requirements under 35 U.S.C. §§ 120 and 365(c) and 37 CFR 1.78(a)(1) and (a)(2) must be met. Similarly, the fact that the corrected Filing Receipt accompanying this decision on petition includes the prior-filed application should not be construed as meaning that applicant is entitled to the claim for benefit of priority to the prior-filed application noted thereon. Accordingly, the examiner will, in due course, consider this benefit claim and determine whether the application is entitled to the benefit of the earlier filing date.

A corrected Filing Receipt, which includes the priority claim to the prior-filed application, accompanies this decision on petition.

Any inquiries concerning this decision may be directed to David Bucci at (571) 272-7099. All other inquiries concerning either the examination procedures or status of the application should be directed to the Technology Center.

This application is being forwarded to the examiner of Technology Center Art Unit 3742 for appropriate action on the amendment filed April 28, 2006, including consideration of applicant's entitlement to claim benefit of priority under 35 U.S.C. § 120 and 365(c) to the above-noted, prior-filed PCT application.

David Bucci
Petitions Examiner
Office of Petitions

ATTACHMENT: Corrected Filing Receipt

UNITED STATES PATENT AND TRADEMARK OFFICE

UNITED STATES DEPARTMENT OF COMMERCE
United States Patent and Trademark Office
Address: COMMISSIONER FOR PATENTS
P.O. Box 1450
Alexandria, Virginia 22313-1450
www.uspto.gov

APPL NO.	FILING OR 371 (c) DATE	ART UNIT	FIL FEE REC'D	ATTY.DOCKET NO	DRAWINGS	TOT CLMS	IND CLMS
11/068,643	02/28/2005	3742	1130	2002P00983WOUS	1	9	1

CONFIRMATION NO. 6280

CORRECTED FILING RECEIPT

OC000000021268845

000046726
BSH HOME APPLIANCES CORPORATION
INTELLECTUAL PROPERTY DEPARTMENT
100 BOSCH BOULEVARD
NEW BERN, NC 28562

Date Mailed: 11/17/2006

Receipt is acknowledged of this regular Patent Application. It will be considered in its order and you will be notified as to the results of the examination. Be sure to provide the U.S. APPLICATION NUMBER, FILING DATE, NAME OF APPLICANT, and TITLE OF INVENTION when inquiring about this application. Fees transmitted by check or draft are subject to collection. Please verify the accuracy of the data presented on this receipt. **If an error is noted on this Filing Receipt, please mail to the Commissioner for Patents P.O. Box 1450 Alexandria Va 22313-1450. Please provide a copy of this Filing Receipt with the changes noted thereon. If you received a "Notice to File Missing Parts" for this application, please submit any corrections to this Filing Receipt with your reply to the Notice. When the USPTO processes the reply to the Notice, the USPTO will generate another Filing Receipt incorporating the requested corrections (if appropriate).**

Applicant(s)

Gerd Wilsdorf, Olching, GERMANY;

Assignment For Published Patent Application

BSH Bosch und Siemens Hausgerate GmbH, Munich, GERMANY

Power of Attorney:

John Winburn--26822
Russell Warnock--32860
Craig Loest--48557

Domestic Priority data as claimed by applicant

This application is a CON of PCT/EP03/09240 08/20/2003

Foreign Applications

GERMANY 10240147.0 08/30/2002

If Required, Foreign Filing License Granted: 04/28/2005

The country code and number of your priority application, to be used for filing abroad under the Paris Convention, is US11/068,643

Projected Publication Date: Not Applicable

Non-Publication Request: No

Early Publication Request: No

Title

Cooking surface with a barrier

Preliminary Class

219

PROTECTING YOUR INVENTION OUTSIDE THE UNITED STATES

Since the rights granted by a U.S. patent extend only throughout the territory of the United States and have no effect in a foreign country, an inventor who wishes patent protection in another country must apply for a patent in a specific country or in regional patent offices. Applicants may wish to consider the filing of an international application under the Patent Cooperation Treaty (PCT). An international (PCT) application generally has the same effect as a regular national patent application in each PCT-member country. The PCT process **simplifies** the filing of patent applications on the same invention in member countries, but **does not result** in a grant of "an international patent" and does not eliminate the need of applicants to file additional documents and fees in countries where patent protection is desired.

Almost every country has its own patent law, and a person desiring a patent in a particular country must make an application for patent in that country in accordance with its particular laws. Since the laws of many countries differ in various respects from the patent law of the United States, applicants are advised to seek guidance from specific foreign countries to ensure that patent rights are not lost prematurely.

Applicants also are advised that in the case of inventions made in the United States, the Director of the USPTO must issue a license before applicants can apply for a patent in a foreign country. The filing of a U.S. patent application serves as a request for a foreign filing license. The application's filing receipt contains further information and guidance as to the status of applicant's license for foreign filing.

Applicants may wish to consult the USPTO booklet, "General Information Concerning Patents" (specifically, the section entitled "Treaties and Foreign Patents") for more information on timeframes and deadlines for filing foreign patent applications. The guide is available either by contacting the USPTO Contact Center at 800-786-9199, or it can be viewed on the USPTO website at http://www.uspto.gov/web/offices/pac/doc/general/index.html.

For information on preventing theft of your intellectual property (patents, trademarks and copyrights), you may wish to consult the U.S. Government website, http://www.stopfakes.gov. Part of a Department of Commerce initiative, this website includes self-help "toolkits" giving innovators guidance on how to protect intellectual property in specific countries such as China, Korea and Mexico. For questions regarding patent enforcement issues, applicants may call the U.S. Government hotline at 1-866-999-HALT (1-866-999-4158).

LICENSE FOR FOREIGN FILING UNDER
Title 35, United States Code, Section 184
Title 37, Code of Federal Regulations, 5.11 & 5.15

GRANTED

The applicant has been granted a license under 35 U.S.C. 184, if the phrase "IF REQUIRED, FOREIGN FILING LICENSE GRANTED" followed by a date appears on this form. Such licenses are issued in all applications where

the conditions for issuance of a license have been met, regardless of whether or not a license may be required as set forth in 37 CFR 5.15. The scope and limitations of this license are set forth in 37 CFR 5.15(a) unless an earlier license has been issued under 37 CFR 5.15(b). The license is subject to revocation upon written notification. The date indicated is the effective date of the license, unless an earlier license of similar scope has been granted under 37 CFR 5.13 or 5.14.

This license is to be retained by the licensee and may be used at any time on or after the effective date thereof unless it is revoked. This license is automatically transferred to any related applications(s) filed under 37 CFR 1.53(d). This license is not retroactive.

The grant of a license does not in any way lessen the responsibility of a licensee for the security of the subject matter as imposed by any Government contract or the provisions of existing laws relating to espionage and the national security or the export of technical data. Licensees should apprise themselves of current regulations especially with respect to certain countries, of other agencies, particularly the Office of Defense Trade Controls, Department of State (with respect to Arms, Munitions and Implements of War (22 CFR 121-128)); the Bureau of Industry and Security, Department of Commerce (15 CFR parts 730-774); the Office of Foreign Assets Control, Department of Treasury (31 CFR Parts 500+) and the Department of Energy.

NOT GRANTED

No license under 35 U.S.C. 184 has been granted at this time, if the phrase "IF REQUIRED, FOREIGN FILING LICENSE GRANTED" DOES NOT appear on this form. Applicant may still petition for a license under 37 CFR 5.12, if a license is desired before the expiration of 6 months from the filing date of the application. If 6 months has lapsed from the filing date of this application and the licensee has not received any indication of a secrecy order under 35 U.S.C. 181, the licensee may foreign file the application pursuant to 37 CFR 5.15(b).

UNITED STATES PATENT AND TRADEMARK OFFICE

Commissioner for Patents
United States Patent and Trademark Office
P.O. Box 1450
Alexandria, VA 22313-1450
www.uspto.gov

BSH HOME APPLIANCES CORPORATION
INTELLECTUAL PROPERTY DEPARTMENT
100 BOSCH BOULEVARD
NEW BERN NC 28562

COPY MAILED

NOV 20 2006

OFFICE OF PETITIONS

In re Application of	:	
Michael ROSENBAUER	:	DECISION ON PETITION
Application No. 11/068,644	:	UNDER 37 CFR 1.78(a)(3)
Filed: February 28, 2005	:	
Attorney Docket No. 2002P00970WOUS	:	

This is a decision on the petition under 37 CFR 1.78(a)(3), filed April 28, 2006, to accept an unintentionally delayed claim under 35 U.S.C. § 120 and 365(c) for the benefit of priority to prior-filed PCT Application No. PCT/EP03/09242, filed August 20, 2003, set forth in the accompanying Application Data Sheet (ADS) (the international application number is referred to in the petition and ADS as PCT/EP2003/009242).

The petition under 37 CFR 1.78(a)(3) is **GRANTED.**

A petition for acceptance of a claim for late priority under 37 CFR 1.78(a)(3) is only applicable to those applications filed on or after November 29, 2000. Further, the petition is appropriate only after the expiration of the period specified in 37 CFR 1.78(a)(2)(ii). In addition, the petition under 37 CFR 1.78(a)(3) must be accompanied by:

(1) the reference required by 35 U.S.C. § 120 and 37 CFR 1.78(a)(2)(i) of the prior-filed application, unless previously submitted;
(2) the surcharge set forth in § 1.17(t); and
(3) a statement that the entire delay between the date the claim was due under 37 CFR 1.78(a)(2)(ii) and the date the claim was filed was unintentional. The Commissioner may require additional information where there is a question whether the delay was unintentional.

All the above requirements having been satisfied, the late claim for priority under 35 U.S.C. § 120 and 365(c) is accepted as being unintentionally delayed.

The granting of the petition to accept the delayed benefit claim to the prior-filed application under 37 CFR 1.78(a)(3) should not be construed as meaning that the application is entitled to the benefit of the prior-filed application. In order for the application to be entitled to the

benefit of the prior-filed application, all other requirements under 35 U.S.C. §§ 120 and 365(c) and 37 CFR 1.78(a)(1) and (a)(2) must be met. Similarly, the fact that the corrected Filing Receipt accompanying this decision on petition includes the prior-filed application should not be construed as meaning that applicant is entitled to the claim for benefit of priority to the prior-filed application noted thereon. Accordingly, the examiner will, in due course, consider this benefit claim and determine whether the application is entitled to the benefit of the earlier filing date.

A corrected Filing Receipt, which includes the priority claim to the prior-filed application, accompanies this decision on petition.

Any inquiries concerning this decision may be directed to David Bucci at (571) 272-7099. All other inquiries concerning either the examination procedures or status of the application should be directed to the Technology Center.

This application is being forwarded to the examiner of Technology Center Art Unit 1746 for appropriate action on the amendment filed April 28, 2006, including consideration of applicant's entitlement to claim benefit of priority under 35 U.S.C. § 120 and 365(c) to the above-noted, prior-filed PCT application.

David Bucci
Petitions Examiner
Office of Petitions

ATTACHMENT: Corrected Filing Receipt

UNITED STATES PATENT AND TRADEMARK OFFICE

UNITED STATES DEPARTMENT OF COMMERCE
United States Patent and Trademark Office
Address: COMMISSIONER FOR PATENTS
P.O. Box 1450
Alexandria, Virginia 22313-1450
www.uspto.gov

APPL NO.	FILING OR 371 (c) DATE	ART UNIT	FIL FEE REC'D	ATTY.DOCKET NO	DRAWINGS	TOT CLMS	IND CLMS
11/068,644	02/28/2005	1746	1130	2002P00970WOUS		6	3

CONFIRMATION NO. 6258

CORRECTED FILING RECEIPT

OC000000021268977

000046726
BSH HOME APPLIANCES CORPORATION
INTELLECTUAL PROPERTY DEPARTMENT
100 BOSCH BOULEVARD
NEW BERN, NC 28562

Date Mailed: 11/17/2006

Receipt is acknowledged of this regular Patent Application. It will be considered in its order and you will be notified as to the results of the examination. Be sure to provide the U.S. APPLICATION NUMBER, FILING DATE, NAME OF APPLICANT, and TITLE OF INVENTION when inquiring about this application. Fees transmitted by check or draft are subject to collection. Please verify the accuracy of the data presented on this receipt. **If an error is noted on this Filing Receipt, please mail to the Commissioner for Patents P.O. Box 1450 Alexandria Va 22313-1450. Please provide a copy of this Filing Receipt with the changes noted thereon. If you received a "Notice to File Missing Parts" for this application, please submit any corrections to this Filing Receipt with your reply to the Notice. When the USPTO processes the reply to the Notice, the USPTO will generate another Filing Receipt incorporating the requested corrections (if appropriate).**

Applicant(s)

Michael Rosenbauer, Reimlingen, GERMANY;

Assignment For Published Patent Application

BSH Bosch und Siemens Hausgerate GmbH, Munich, GERMANY

Power of Attorney:

John Winburn--26822
Russell Warnock--32860
Craig Loest--48557

Domestic Priority data as claimed by applicant

This application is a CON of PCT/EP03/09242 08/20/2003

Foreign Applications

GERMANY 102 39 495.4 08/28/2002

If Required, Foreign Filing License Granted: 04/28/2005

The country code and number of your priority application, to be used for filing abroad under the Paris Convention, is US11/068,644

Projected Publication Date: Not Applicable

Non-Publication Request: No

Early Publication Request: No

Title

Filter device

Preliminary Class

134

PROTECTING YOUR INVENTION OUTSIDE THE UNITED STATES

Since the rights granted by a U.S. patent extend only throughout the territory of the United States and have no effect in a foreign country, an inventor who wishes patent protection in another country must apply for a patent in a specific country or in regional patent offices. Applicants may wish to consider the filing of an international application under the Patent Cooperation Treaty (PCT). An international (PCT) application generally has the same effect as a regular national patent application in each PCT-member country. The PCT process **simplifies** the filing of patent applications on the same invention in member countries, but **does not result** in a grant of "an international patent" and does not eliminate the need of applicants to file additional documents and fees in countries where patent protection is desired.

Almost every country has its own patent law, and a person desiring a patent in a particular country must make an application for patent in that country in accordance with its particular laws. Since the laws of many countries differ in various respects from the patent law of the United States, applicants are advised to seek guidance from specific foreign countries to ensure that patent rights are not lost prematurely.

Applicants also are advised that in the case of inventions made in the United States, the Director of the USPTO must issue a license before applicants can apply for a patent in a foreign country. The filing of a U.S. patent application serves as a request for a foreign filing license. The application's filing receipt contains further information and guidance as to the status of applicant's license for foreign filing.

Applicants may wish to consult the USPTO booklet, "General Information Concerning Patents" (specifically, the section entitled "Treaties and Foreign Patents") for more information on timeframes and deadlines for filing foreign patent applications. The guide is available either by contacting the USPTO Contact Center at 800-786-9199, or it can be viewed on the USPTO website at http://www.uspto.gov/web/offices/pac/doc/general/index.html.

For information on preventing theft of your intellectual property (patents, trademarks and copyrights), you may wish to consult the U.S. Government website, http://www.stopfakes.gov. Part of a Department of Commerce initiative, this website includes self-help "toolkits" giving innovators guidance on how to protect intellectual property in specific countries such as China, Korea and Mexico. For questions regarding patent enforcement issues, applicants may call the U.S. Government hotline at 1-866-999-HALT (1-866-999-4158).

LICENSE FOR FOREIGN FILING UNDER
Title 35, United States Code, Section 184
Title 37, Code of Federal Regulations, 5.11 & 5.15

GRANTED

The applicant has been granted a license under 35 U.S.C. 184, if the phrase "IF REQUIRED, FOREIGN FILING LICENSE GRANTED" followed by a date appears on this form. Such licenses are issued in all applications where

the conditions for issuance of a license have been met, regardless of whether or not a license may be required as set forth in 37 CFR 5.15. The scope and limitations of this license are set forth in 37 CFR 5.15(a) unless an earlier license has been issued under 37 CFR 5.15(b). The license is subject to revocation upon written notification. The date indicated is the effective date of the license, unless an earlier license of similar scope has been granted under 37 CFR 5.13 or 5.14.

This license is to be retained by the licensee and may be used at any time on or after the effective date thereof unless it is revoked. This license is automatically transferred to any related applications(s) filed under 37 CFR 1.53(d). This license is not retroactive.

The grant of a license does not in any way lessen the responsibility of a licensee for the security of the subject matter as imposed by any Government contract or the provisions of existing laws relating to espionage and the national security or the export of technical data. Licensees should apprise themselves of current regulations especially with respect to certain countries, of other agencies, particularly the Office of Defense Trade Controls, Department of State (with respect to Arms, Munitions and Implements of War (22 CFR 121-128)); the Bureau of Industry and Security, Department of Commerce (15 CFR parts 730-774); the Office of Foreign Assets Control, Department of Treasury (31 CFR Parts 500+) and the Department of Energy.

NOT GRANTED

No license under 35 U.S.C. 184 has been granted at this time, if the phrase "IF REQUIRED, FOREIGN FILING LICENSE GRANTED" DOES NOT appear on this form. Applicant may still petition for a license under 37 CFR 5.12, if a license is desired before the expiration of 6 months from the filing date of the application. If 6 months has lapsed from the filing date of this application and the licensee has not received any indication of a secrecy order under 35 U.S.C. 181, the licensee may foreign file the application pursuant to 37 CFR 5.15(b).

UNITED STATES PATENT AND TRADEMARK OFFICE

Commissioner for Patents
United States Patent and Trademark Office
P.O. Box 1450
Alexandria, VA 22313-1450
www.uspto.gov

GENE SCOTT; PATENT LAW & VENTURE GROUP
3140 RED HILL AVENUE
SUITE 150
COSTA MESA CA 92626-3440

COPY MAILED

DEC 1 3 2005

OFFICE OF PETITIONS

In re Application of	:	
Holmes, Ned W.	:	DECISION ON PETITION
Application No. 11/068,669	:	TO MAKE SPECIAL
Filed: February 28, 2005	:	37 CFR 1.102(D)
Attorney Docket No. Holmes.N-02	:	

This is a decision on the petition under 37 CFR §1.102(d), filed November 14, 2005, to make the above-identified application special based on actual infringement as set forth in M.P.E.P. § 708.02, Section II.

The petition is **DISMISSED.**

A grantable petition to make an application special under 37 CFR §1.102(d) and MPEP §708.02, Section II: Infringement, must be accompanied by the required fee pursuant to 37 CFR 1.17(h) and a statement by the applicant, assignee, or attorney/agent registered to practice before the office alleging:

> (A) That there is an infringing device or product actually on the market or method in use;
>
> (B) That a rigid comparison of the alleged infringing device, product, or method with the claims of the application has been made, and that, in his or her opinion, some of the claims are unquestionably infringed; and
>
> (C) That he or she has made or caused to be made a careful and thorough search of the prior art or has a good knowledge of the pertinent prior art.
>
> Applicant must provide one copy of each of the references deemed most closely related to the subject matter encompassed by the claims if said references are not already of record.

The instant petition fails to meet the requirements set forth above for special status because it lacks (B) and (C). Although petitioner does present a discussion on the infringement and infringing company, petitioner has failed to comply with the above requirements.

Further correspondence with respect to this matter should be addressed as follows:

By Mail: Mail Stop PETITION

Commissioner for Patents
P. O. Box 1450
Alexandria, VA 22313-1450

By hand: U. S. Patent and Trademark Office
Customer Service Window, Mail Stop Petitions
Randolph Building
401 Dulany Street
Alexandria, VA 22314

By FAX: (571) 273-8300

Telephone inquiries concerning this decision should be directed to Petitions Examiner Liana Chase at 571-272-3206.

All other inquiries concerning either the examination or status of the application should be directed to the Technology Center.

This matter is being referred to the Technology Center Art Unit 3671 for action in its regular turn.

Denise Pathan for

David Bucci
Petitions Examiner
Office of Petitions

UNITED STATES PATENT AND TRADEMARK OFFICE

Commissioner for Patents
United States Patent and Trademark Office
P.O. Box 1450
Alexandria, VA 22313-1450
www.uspto.gov

GENE SCOTT; PATENT LAW & VENTURE GROUP
3140 RED HILL AVENUE
SUITE 150
COSTA MESA CA 92626-3440

COPY MAILED

JAN 0 9 2006

OFFICE OF PETITIONS

In re Application of	:	
Holmes, Ned W.	:	
Application No. 11/068,669	:	ON PETITION
Filed: February 28, 2005	:	
Attorney Docket No. Holmes.N-02	:	

This is a decision on the renewed petition under 37 CFR §1.102(d), filed December 16, 2005, to make the above-identified application special.

The petition requests that the above-identified application be made special under the accelerated examination procedure set forth in M.P.E.P. § 708.02, Section II: Infringement.

The petition is **GRANTED.**

A grantable petition to make an application special under 37 CFR §1.102(d) and MPEP §708.02, Section II: Infringement, must be accompanied by the required fee pursuant to 37 CFR 1.17(h) and a statement by the applicant, assignee, or attorney/agent registered to practice before the office alleging:

> (A) That there is an infringing device or product actually on the market or method in use;
>
> (B) That a rigid comparison of the alleged infringing device, product, or method with the claims of the application has been made, and that, in his or her opinion, some of the claims are unquestionably infringed; and
>
> (C) That he or she has made or caused to be made a careful and thorough search of the prior art or has a good knowledge of the pertinent prior art.
>
> Applicant must provide one copy of each of the references deemed most closely related to the subject matter encompassed by the claims if said references are not already of record.

The petition complies with all the above stated requirements. Accordingly, the above-identified application has been accorded "special" status

Telephone inquires concerning this decision should be directed to Paralegal Liana Chase at (571) 272-3206. All other inquires concerning either the examination or status of the application should be directed to the Technology Center.

This matter is being referred to the Technology Center Art Unit 3671 for expedited prosecution.

Amelia Au
Petitions Examiner
Office of Petitions

UNITED STATES PATENT AND TRADEMARK OFFICE

Commissioner for Patents
United States Patent and Trademark Office
P.O. Box 1450
Alexandria, VA 22313-1450
www.uspto.gov

ANDERSON KILL & OLICK, P.C.
1251 Avenue of the Americas
New York NY 10020

COPY MAILED

OCT 09 2007

OFFICE OF PETITIONS

In re Application of :
Tadashi ONO :
Application No. 11/068,677 : DECISION ON PETITION
Filed: February 28, 2005 :
Attorney Docket No. MM5004 :

This is a decision on the petition under 37 CFR 1.137(b), filed September 11, 2007, to revive the above-identified application.

The petition is **GRANTED**.

The above-identified application became abandoned for failure to reply to the Notice of Allowance and Fee(s) Due ("Notice"), mailed May 2, 2007, which set a shortened statutory period for reply of three (3) months. Accordingly, the above-identified application became abandoned on August 3, 2007.

The petition satisfies the conditions for revival pursuant to the provisions of 37 CFR 1.137(b) in that (1) the reply in the form of a publication fee payment of $300; (2) the petition fee of $1500; and (3) the required statement of unintentional delay have been received. Accordingly, the reply to the Notice of May 2, 2007 is accepted as having been unintentionally delayed.

Telephone inquiries concerning this decision should be directed to Brian Sines at (571) 272-6051 or in his absence, the undersigned at (571) 272-7099.

The application file is being referred to the Office of Publications.

David Bucci
Petitions Examiner
Office of Petitions

UNITED STATES PATENT AND TRADEMARK OFFICE

Commissioner for Patents
United States Patent and Trademark Office
P.O. Box 1450
Alexandria, VA 22313-1450
www.uspto.gov

June 11, 2009

William L. Androlia
Quinn, Emanuel, Urquhart, Oliver & Hedges, LLP
865 S. Figueroa Street, 10th Floor
Los Angeles, CA 90017

Patent No.: 7,388,445 B2
Application No.: 11/068,679
Inventor: Tsuyoshi Ohshima, et al.
Issued: June 17, 2008
Title: **PIEZOELECTRIC OSCILLATOR FOR QUADRATURE MODULATION**

Re: Request for Certificate of Correction

Consideration has been given your request for the issuance of a certificate of correction for the above-identified patent under the provisions of Rule(s) 1.322 and/or 1.323.

Assignees' names and addresses (assignment data) printed in a patent, are based *solely* on information supplied in the appropriate space for identifying the assignment data, i.e., item 3 of the Issue Fee Transmittal Form PTOL-85B. Granting of a request under 37 CFR 3.81(b) is required to correct applicant's error providing ***incorrect or erroneous*** assignment data, *before* issuance of a Certificate of Correction, under 37 CFR 1.323 *(see Manual of Patent Examining Procedures (M.P.E.P) Chp.1400, sect. 1481)*. This procedure is required *at any time after the issue fee is paid*, including after issuance of the patent.

In view of the foregoing, your request, in this matter, is hereby denied.

A request to correct the Assignee under 37 CFR 3.81(b) should include:

A. **the processing fee set forth in 37 CFR 1.117(h) (currently $130);**
B. a statement that the failure to include the correct assignee name on the PTOL-85B was inadvertent; and
C. a copy of the Notice of Recordation of Assignment Document, reflecting the reel and frame number where the assignment(s) is recorded and/or reflecting proof of *the date* the assignment was submitted for recordation.

In the Request, Applicant(s) may request that the file be forwarded to Certificates of Correction Branch, for issuance of a Certificate of Correction, if the Request is granted.

Any request under 37 CFR 3.81(b) should be directed to the following address or facsimile number:

By mail:	Mail Stop PETITIONS Commissioner for Patents Post Office Box 1450 Alexandria, VA 22313-1450
By hand:	Customer Service Window Mail Stop Petitions Randolph Building 401 Dulany Street Alexandria, VA 22314
By fax:	(571) 273-0025 ATTN: Office of Petitions

If a fee (currently $100) was previously submitted for consideration of a Request for Certificate of Correction, under CFR 1.323, to correct assignment data, no additional fee is required.

Virginia Tolbert
For Mary Diggs, Supervisor
Decisions & Certificate of Correction Branch
(703) 756-1591

vt

UNITED STATES PATENT AND TRADEMARK OFFICE

Commissioner for Patents
United States Patent and Trademark Office
P.O. Box 1450
Alexandria, VA 22313-1450
www.uspto.gov

QUINN EMANUEL
KODA & ANDROLIA
865 S. FIGUEROA STREET, 10TH FLOOR
LOS ANGELES CA 90017

COPY MAILED
DEC 1 0 2009
OFFICE OF PETITIONS

In re Patent No. 7,388,445	:	
Application No. 11/068,679	:	
Filed: March 1, 2005	:	ON PETITION
Issued: June 17, 2008	:	
Attorney Docket No. 172A 3695	:	

This is a decision on the petition filed October 15, 2009, which is being treated as a request under 37 CFR 3.81(b)[1] to correct the name of the assignee on the front page of the above-identified patent by way of a Certificate of Correction.

The request is **GRANTED**.

Additionally, the $130.00 surcharge fee which will be charged to petitioner's deposit account as authorized October 15, 2009.

This matter is being referred to the Certificates of Correction Branch for issuance of the requested Certificate of Correction.

Telephone inquiries concerning this decision may be directed to the undersigned at (571) 272-7751. Inquiries regarding the certificate of correction should be directed to the Certificate of Correction Branch at (571) 272-4200.

Joan Olszewski
Petitions Examiner
Office of Petitions

[1] *See* MPEP 1309, subsection II; and Official Gazette of June 22, 2004.

UNITED STATES PATENT AND TRADEMARK OFFICE

UNITED STATES DEPARTMENT OF COMMERCE
United States Patent and Trademark Office
Address: COMMISSIONER FOR PATENTS
P.O. Box 1450
Alexandria, Virginia 22313-1450
www.uspto.gov

Edwards Angell Palmer & Dodge LLP
111 HUNTINGTON AVENUE
BOSTON, MA 02199

Mail Date: 04/22/2010

Applicant	: Patrick W. Gray	: DECISION ON REQUEST FOR
Patent Number	: 7662548	: RECALCULATION of PATENT
Issue Date	: 02/16/2010	: TERM ADJUSTMENT IN VIEW
Appliction No	: 11/068,686	: OF WYETH AND NOTICE OF INTENT TO
Filed	: 02/28/2005	: ISSUE CERTIFICATE OF CORRECTION
		:

The Request for Recalculation is **GRANTED** to the extent indicated.

The patent term adjustment has been determined to be **758** days. The USPTO will *sua sponte* issue a certificate of correction reflecting the amount of PTA days determined by the recalculation.

Prior to the issuance of the certificate of correction, the USPTO will afford patentee an opportunity to be heard and request reconsideration. Accordingly, patentee has **one month or thirty (30) days**, whichever is longer, to file a request for reconsideration of this patent term adjustment calculation. See 35 U.S.C. 154(b)(3)(B)(ii) and 37 CFR 1.322(a)(4). No extensions of time will be granted under 37 CFR 1.136.

Patentee should use document code PET.OP if electronically filing a request for reconsideration of this patent term adjustment calculation. The patentee must also include the information required by 37 CFR 1.705(b)(2) and the fee required by 37 CFR 1.18(e). If patentee does not file a timely request for reconsideration of this patent term adjustment calculation including the information required by 37 CFR 1.705(b)(2) and the fee required by 37 CFR 1.18(e), the USPTO will issue a certificate of correction reflecting the PTA determination noted above.

Patentee should be aware that in order to preserve the right to review in the United States District Court for the District of Columbia of the USPTO patent term adjustment determination, patentee must ensure that he or she also take the steps required under 35 U.S.C. 154(b)(4)(A) in a timely manner. Nothing in the request for recalculation should be construed as providing an alternative time frame for commencing a civil action under 35 U.S.C. 154(b)(4)(A).

Any questions concerning this decision should be directed to the Office of Patent Legal Administration at 571-272-7702.

UNITED STATES PATENT AND TRADEMARK OFFICE

Commissioner for Patents
United States Patent and Trademark Office
P.O. Box 1450
Alexandria, VA 22313-1450
www.uspto.gov

AMIN. TUROCY & CALVIN, LLP
24TH FLOOR, NATIONAL CITY CENTER
1900 EAST NINTH STREET
CLEVELAND, OH 44114

COPY MAILED
NOV 21 2006
OFFICE OF PETITIONS

In re Application of	:	
Sridhar Sundararaman, et. al.	:	
Application No. 11/068,691	:	DECISION ON PETITION
Filed: February 28, 2005	:	
Attorney Docket No. MS311017.01/MSFTP843US	:	

This is a decision on the petition under 37 CFR 1.137(b), filed by facsimile transmission on February 2, 2006, which is being treated as a petition under 37 CFR 1.8(b), requesting withdrawal of the holding of abandonment in the above-identified application.

The petition is **GRANTED**.

This application was held abandoned for failure to timely respond to the Notice to File Missing Parts of Non-provisional Application mailed on April 29, 2005. A Notice of Abandonment was mailed on January 6, 2006.

Petitioner states that a timely reply was timely sent the Office via facsimile transmission on June 28, 2005, which included the following papers: an executed Oath/Declaration, and a copy of the Notice to File Missing Parts. Petitioner has submitted a copy of the previously mailed correspondence, which bears a certificate of facsimile transmission dated June 28, 2005, which would have rendered the reply timely if received.

The file record does not include the originally submitted papers. Failure to receive correspondence which includes a certificate of mailing or certificate of facsimile transmission is addressed in 37 CFR 1.8(b), reproduced below:

> In the event that correspondence is considered timely filed by being mailed or transmitted in accordance with paragraph (a) of this section, but not received in the U.S. Patent and Trademark Office after a reasonable amount of time has elapsed from the time of mailing or transmitting of the correspondence, or after the application is held to be abandoned, or after the proceeding is

dismissed, terminated, or decided with prejudice, the correspondence will be considered timely if the party who forwarded such correspondence:

(1) Informs the Office of the previous mailing or transmission of the correspondence promptly after becoming aware that the Office has no evidence of receipt of the correspondence;

(2) Supplies an additional copy of the previously mailed or transmitted correspondence and certificate; and

(3) Includes a statement which attests on a personal knowledge basis or to the satisfaction of the Director to the previous timely mailing or transmission. If the correspondence was sent by facsimile transmission, a copy of the sending unit's report confirming transmission may be used to support this statement.

The petition satisfies the above requirements of 37 CFR 1.8(b). Accordingly, the holding of abandonment for failure to timely file a reply to the Notice to File Missing Parts of Non-provisional Application mailed April 29, 2005, is hereby withdrawn and the application restored to pending status.

Petitioner is reminded to ensure that all future correspondence submitted to the U.S. Patent and Trademark Office (USPTO), by facsimile transmission be sent to the Centralized Facsimile number at (571) 273-8300, to avoid situations of the nature which occurred in the present application.

This application file is being referred to the Office of Initial Patent Examination, for further processing of the reply received with the instant petition.

Andrea Smith
Petitions Examiner
Office of Petitions

UNITED STATES PATENT AND TRADEMARK OFFICE

Commissioner for Patents
United States Patent and Trademark Office
P.O. Box 1450
Alexandria, VA 22313-1450
www.uspto.gov

FOLEY & LARDNER, LLP
3000 K STREET NW, SUITE 500
WASHINGTON, DC 20007

COPY MAILED

AUG 1 1 2008

In re Application of	:	
YADAV, et al.	:	
Application No. 11/068,714	:	DECISION ON PETITION
Filed: March 1, 2005	:	TO WITHDRAW
Attorney Docket No. 037768-0156	:	FROM RECORD
	:	

This is a decision on the Request to Withdraw as attorney or agent of record under 37 C.F.R. § 1.36(b), filed May 5, 2008.

The request is DISMISSED as moot.

A review of the file record indicates that the power of attorney to FOLEY & LARDNER, LLP has been revoked by the assignee of the patent application on July 3, 2008. Accordingly, the request to withdraw under 37 C.F.R. § 1.36(b) is moot.

All future communications from the Office will continue to be directed to the below-listed address until otherwise notified by applicant.

Telephone inquires concerning this decision should be directed to the undersigned at 571-272- 7253.

Monica A. Graves
Petitions Examiner
Office of Petitions

cc: PPG INDUSTRIES, INC.
INTELLECTUAL PROPERTY DEPT
ONE PPG PLACE
PITTSBURGH, PA 15272

UNITED STATES PATENT AND TRADEMARK OFFICE

Commissioner for Patents
United States Patent and Trademark Office
P.O. Box 1450
Alexandria, VA 22313-1450
www.uspto.gov

Robert M. Bauer, Esq.
MacDonald Illig Jones & Britton, LLP
Suite 700
100 State Street
Erie, PA 16507-1479

COPY MAILED

SEP 1 2 2008

OFFICE OF PETITIONS

In re Application of	:	
Naoto Kaneko	:	
Application No. 11/068,726	:	DECISION ON PETITION
Filed: March 1, 2005	:	TO WITHDRAW
Attorney Docket No. NOKIA.4021US	:	FROM RECORD
	:	

This is a decision on the Request to Withdraw as attorney or agent of record under 37 C.F.R. § 1.36(b), filed July 25, 2008.

The request is **NOT APPROVED.**

A grantable request to withdraw as attorney/agent of record must be signed by every attorney/agent seeking to withdraw or contain a clear indication that one attorney is signing on behalf of another/others. The Office requires the practitioner(s) requesting withdrawal to certify that he, she, or they have: (1) given reasonable notice to the client, prior to the expiration of the response period, that the practitioner(s) intends to withdraw from employment; (2) delivered to the client or a duly authorized representative of the client all papers and property (including funds) to which the client is entitled; and (3) notified the client of any responses that may be due and the time frame within which the client must respond, pursuant 37 CFR 10.40(c).

The request cannot be approved because there is no indication that the acts noted in the above-identified certifications have been performed. Refer to Form No. PTO/SB/83 (Updated 4/2008).

All future communications from the Office will continue to be directed to the above-listed address until otherwise notified by applicant.

Telephone inquiries concerning this decision should be directed to the undersigned at 571-272- 6735.

Kimberly Inabnet
Petitions Examiner
Office of Petitions

cc: Harrington & Smith, LLP
4 Research Drive
Shelton, CT 06484

UNITED STATES PATENT AND TRADEMARK OFFICE

UNITED STATES DEPARTMENT OF COMMERCE
United States Patent and Trademark Office
Address: COMMISSIONER FOR PATENTS
P.O. Box 1450
Alexandria, Virginia 22313-1450
www.uspto.gov

Sunstein Kann Murphy & Timbers LLP
125 SUMMER STREET
BOSTON, MA 02110-1618

Mail Date: 04/26/2010

Applicant	: Daniel L. Marks	: DECISION ON REQUEST FOR
Patent Number	: 7586618	: RECALCULATION of PATENT
Issue Date	: 09/08/2009	: TERM ADJUSTMENT IN VIEW
Application No	: 11/068,739	: OF WYETH AND NOTICE OF INTENT TO
Filed	: 02/28/2005	: ISSUE CERTIFICATE OF CORRECTION
		:

The Request for Recalculation is **GRANTED** to the extent indicated.

The patent term adjustment has been determined to be **103** days. The USPTO will *sua sponte* issue a certificate of correction reflecting the amount of PTA days determined by the recalculation.

Prior to the issuance of the certificate of correction, the USPTO will afford patentee an opportunity to be heard and request reconsideration. Accordingly, patentee has **one month or thirty (30) days**, whichever is longer, to file a request for reconsideration of this patent term adjustment calculation. See 35 U.S.C. 154(b)(3)(B)(ii) and 37 CFR 1.322(a)(4). No extensions of time will be granted under 37 CFR 1.136.

Patentee should use document code PET.OP if electronically filing a request for reconsideration of this patent term adjustment calculation. The patentee must also include the information required by 37 CFR 1.705(b)(2) and the fee required by 37 CFR 1.18(e). If patentee does not file a timely request for reconsideration of this patent term adjustment calculation including the information required by 37 CFR 1.705(b)(2) and the fee required by 37 CFR 1.18(e), the USPTO will issue a certificate of correction reflecting the PTA determination noted above.

Patentee should be aware that in order to preserve the right to review in the United States District Court for the District of Columbia of the USPTO patent term adjustment determination, patentee must ensure that he or she also take the steps required under 35 U.S.C. 154(b)(4)(A) in a timely manner. Nothing in the request for recalculation should be construed as providing an alternative time frame for commencing a civil action under 35 U.S.C. 154(b)(4)(A).

Any questions concerning this decision should be directed to the Office of Patent Legal Administration at 571-272-7702.

UNITED STATES PATENT AND TRADEMARK OFFICE

UNITED STATES DEPARTMENT OF COMMERCE
United States Patent and Trademark Office
Address: COMMISSIONER FOR PATENTS
P.O. Box 1450
Alexandria, Virginia 22313-1450
www.uspto.gov

ROTHWELL, FIGG, ERNST & MANBECK, P.C.
1425 K STREET, N.W.
SUITE 800
WASHINGTON, DC 20005

Mail Date: 04/20/2010

Applicant	: John Douglas Adam	: DECISION ON REQUEST FOR
Patent Number	: 7579618	: RECALCULATION of PATENT
Issue Date	: 08/25/2009	: TERM ADJUSTMENT IN VIEW
Appliction No	: 11/068,750	: OF WYETH AND NOTICE OF INTENT TO
Filed	: 03/02/2005	: ISSUE CERTIFICATE OF CORRECTION
		:

The Request for Recalculation is **GRANTED** to the extent indicated.

The patent term adjustment has been determined to be **447** days. The USPTO will *sua sponte* issue a certificate of correction reflecting the amount of PTA days determined by the recalculation.

Prior to the issuance of the certificate of correction, the USPTO will afford patentee an opportunity to be heard and request reconsideration. Accordingly, patentee has **one month or thirty (30) days**, whichever is longer, to file a request for reconsideration of this patent term adjustment calculation. See 35 U.S.C. 154(b)(3)(B)(ii) and 37 CFR 1.322(a)(4). No extensions of time will be granted under 37 CFR 1.136.

Patentee should use document code PET.OP if electronically filing a request for reconsideration of this patent term adjustment calculation. The patentee must also include the information required by 37 CFR 1.705(b)(2) and the fee required by 37 CFR 1.18(e). If patentee does not file a timely request for reconsideration of this patent term adjustment calculation including the information required by 37 CFR 1.705(b)(2) and the fee required by 37 CFR 1.18(e), the USPTO will issue a certificate of correction reflecting the PTA determination noted above.

Patentee should be aware that in order to preserve the right to review in the United States District Court for the District of Columbia of the USPTO patent term adjustment determination, patentee must ensure that he or she also take the steps required under 35 U.S.C. 154(b)(4)(A) in a timely manner. Nothing in the request for recalculation should be construed as providing an alternative time frame for commencing a civil action under 35 U.S.C. 154(b)(4)(A).

Any questions concerning this decision should be directed to the Office of Patent Legal Administration at 571-272-7702.

UNITED STATES PATENT AND TRADEMARK OFFICE

Commissioner for Patents
United States Patent and Trademark Office
P.O. Box 1450
Alexandria, VA 22313-1450
www.uspto.gov

ROSENBERG, KLEIN & LEE
3458 ELLICOTT CENTER DRIVE-SUITE 101
ELLICOTT CITY MD 21043

COPY MAILED

JUL 21 2005

OFFICE OF PETITIONS

In re Application of
Shang-Ming Chi
Application No. 11/068,770
Filed: March 2, 2005
Attorney Docket No. MR1957-1033

: DECISION REFUSING STATUS
: UNDER 37 CFR 1.47(b)

This decision is in response to the petition filed June 30, 2005, under 37 CFR 1.47(b), in response to the Notice to File Missing Parts "Notice" mailed March 30, 2005.

The petition is **DISMISSED**.

Rule 47 applicant is given TWO MONTHS from the mailing date of this decision to respond, correcting the below-noted deficiencies. Any response should be entitled "Request for Reconsideration of Petition Under 37 CFR 1.47(a)" and may include an oath or declaration executed by the inventor. **Failure to respond will result in abandonment of the application.** Any extensions of time will be governed by 37 CFR 1.136(a).

The above-identified application, naming Shang-Ming Chi as the sole inventor, was filed on March 2, 2005 without an executed oath or declaration. Accordingly, on March 30, 2005 , a "Notice To File Missing Parts of Nonprovisional Application" was mailed, requiring, an executed oath or declaration and a surcharge for its late filing. In response, the present petition was filed with a one month extension of time request.

A grantable petition under 37 CFR 1.47(b) requires:

(1) proof that the non-signing inventor cannot be reached or refuses to sign the oath or declaration after having been presented with the application papers (specification, claims and drawings);

(2) an acceptable oath or declaration in compliance with 35 U.S.C. §§ 115 and 116;

(3) the petition fee;

(4) a statement of the last known address of the non-signing inventor;

(5) proof of proprietary interest, and

(6) proof of irreparable damage.

The petition lacks items (1), (2) and (5).

In regards to item (1), petitioner has not provided sufficient proof that a copy of the application (specification including claims, drawings, if any, and the Declaration) was sent or given to the non-signing inventor.[1]

Petitioners have submitted a copy of a letter sent to the non-signing inventor. The evidence suggests however that the letter only contained the declaration and assignment and not the complete application (specification, including claims, drawings, if any, and the Declaration). The evidence also does not show that the non-signing inventor ever had the benefit of reviewing the application.

Petitioners may show proof that a copy of the application was sent or given to the non-signing inventor for review by providing a copy of the cover letter transmitting the application papers to the non-signing inventors or details given in an affidavit or declaration of facts by a person having first hand knowledge of the details.

Likewise, before a refusal can be alleged, petitioners must demonstrate that the non-signing inventor was sent or given a copy of the application papers. Petitioners must provide proof that the inventor refused to sign the declaration after being sent or given a copy of the application papers. If there is a written refusal, petitioners must provide a copy thereof with any renewed petition. If the refusal was made orally to a person, then that person must provide details of the refusal in an affidavit or declaration of facts.

As to item (2), an oath or declaration for the patent application in compliance with 37 CFR 1.63 and 1.64 has not been presented. A declaration in compliance with 37 CFR 1.63, 1.64, and 1.67 must be presented, signed by all of the signing inventors, if any. If no inventor(s) will sign the declaration, the declaration may be signed on behalf of the inventor by an assignee or the oath or declaration must be signed by an officer of the corporation (president, vice president, secretary, or treasurer) on behalf of and as agent for the non-signing inventor(s). The officer must identify his/her title in the declaration, as well as his/her mailing address, residence, if the applicant lives at a different location from where he or she customarily receives mail, as well as the citizenship of individual signing on behalf of the non-signing inventor. If the oath or declaration is not signed by an officer of the corporation, then proof of authority of the person signing on behalf of the corporation must be submitted.[2]

As to item (5), petitioner must provide proof that the Rule 1.47(b) applicant has sufficient proprietary interest in the subject matter to justify the filing of the application.[3] Petitioners should provide a copy of the employment agreement between the non-signing inventor and the Rule 1.47(b) applicant (company); a copy of an assignment agreement showing that the invention disclosed in the application is assigned to the

---

[1]MPEP 409.03(d)

[2]MPEP 409.03(b).

[3]MPEP 409.03(f).

Rule 1.47(b) applicant; or a legal memorandum signed by an attorney familiar with the law of the jurisdiction stating that a court of competent jurisdiction would by the weight of authority in that jurisdiction award the title of the invention to the Rule 1.47(b) applicant.

Please be advised that effective November 22, 2004, the petition fee was increased to $200.00. Therein, deposit account no. 18-2011 has been charged in the amount of $70.00 to make up the difference between that which was paid and that which is due pursuant to 37 CFR 1.17(g). See the Notice published in the Federal Register on September 21, 2004 and in the Official Gazette of the United States Patent and Trademark Office on October 12, 2004.

Further correspondence with respect to this matter should be addressed as follows:

By mail: Mail Stop Petition
Commissioner for Patents
P.O. Box 1450
Alexandria, VA 22313-1450

By FAX: (571) 273-8300

Telephone inquiries concerning this matter may be directed to the undersigned Petitions Attorney at (571) 272-3212.

Patricia Faison-Ball
Senior Petitions Attorney
Office of Petitions

UNITED STATES PATENT AND TRADEMARK OFFICE

Commissioner for Patents
United States Patent and Trademark Office
P.O. Box 1450
Alexandria, VA 22313-1450
www.uspto.gov

TROXELL LAW OFFICE PLLC
SUITE 1404
5205 LEESBURG PIKE
FALLS CHURCH, VA 22041

COPY MAILED

FEB 16 2006

OFFICE OF PETITIONS

In re Application of	:	
Chih-Sheng Wei	:	
Application No. 11/068,812	:	DECISION DISMISSING PETITION
Filed: March 2, 2005	:	UNDER 37 CFR 1.55(c)
Attorney Docket No. BHT-3111-592	:	

This is a decision on the petition under 37 CFR 1.55(c), filed December 6, 2005, for acceptance of an unintentionally delayed claim under 35 U.S.C. § 119(a)-(d) for benefit of the filing date of foreign Taiwan Patent Application No. 093106107, filed March 9, 2004.

The instant pending nonprovisional application was filed after November 29, 2000, and did not include a reference to the foreign application, for which benefit is now sought, within the later of four months from the actual filing date of the application or sixteen months from the filing date of the prior foreign application. Therefore, since the claim for priority is submitted after the period specified in 37 CFR 1.55(a)(1)(i), this is an appropriate petition under the provisions of 37 CFR 1.55(c).

A petition under 37 CFR 1.55(c) to accept an unintentionally delayed claim for priority requires:

(1) The nonprovisional application claiming the benefit of an earlier filing date must be filed on or after November 29, 2000;

(2) the claim submitted with the petition must identify the prior foreign application for which priority is claimed, as well as any foreign application for the same subject matter and having a filing date before that of the application for which priority is claimed, by the application number, country, and the filing date and be included either in an oath or declaration (37 CFR 1.63(c)(2)) or in an Application Data Sheet (37 CFR 1.76(b)(6);

(3) the surcharge as set forth in 37 CFR 1.17(t);

(4) a statement that the entire delay between the date the claim was due under 37 CFR 1.55(a)(1) and the date the claim was filed was unintentional. (The Commissioner may require additional information where there is a question whether the delay was unintentional.); and

(5) the above-identified nonprovisional application must be filed within 12 months of the filing date of the foreign application.

The instant petition fails to comply with item (2) above. In this regard, a review of the file record fails to disclose that the priority information was included in an oath or declaration or in an Application Data Sheet in accordance with 37 CFR 1.76(b)(6). Unless provided in an application data sheet, 37 CFR 1.63(c)(2) requires that the oath or declaration must identify the foreign application for patent or inventor's certificate for which priority is claimed under 37 CFR 1.55, and any foreign application having a filing date before that of the application on which priority is claimed, by specifying the application number, country, day, month, and year of its filing. *Note* MPEP 201.14.

In view of the above, compliance with 37 CFR 1.63(c)(2) or 37 CFR 1.76(b)(6) must be satisfied if applicant desires to claim priority to the foreign application noted in the petition. Any future petition should include a cover letter and be entitled "Renewed Petition under 37 CFR 1.55(c)."

Further correspondence with respect to this matter should be addressed as follows:

By mail: Mail Stop Petition
Commissioner for Patents
Box 1450
Alexandria, VA 22313

By FAX: (571) 273-8300
Attn: Office of Petitions

By hand: Customer Service Window
Randolph Building
401 Dulany Street
Alexandria, VA 22314

Any inquiries concerning this decision may be directed to Petitions Attorney Edward Tannouse at (571) 272-3228.

Frances Hicks

Frances Hicks
Petitions Examiner
Office of Petitions
Office of the Deputy Commissioner
for Patent Examination Policy

UNITED STATES PATENT AND TRADEMARK OFFICE

Commissioner for Patents
United States Patent and Trademark Office
P.O. Box 1450
Alexandria, VA 22313-1450
www.uspto.gov

TROXELL LAW OFFICE PLLC
SUITE 1404
5205 LEESBURG PIKE
FALLS CHURCH, VA 22041

COPY MAILED
SEP 29 2006
OFFICE OF PETITIONS

In re Application of	:	
Chih-Sheng Wei	:	
Application No. 11/068,812	:	DECISION ON PETITION
Filed: March 2, 2005	:	UNDER 37 CFR 1.55(c)
Attorney Docket No. BHT-3111-592	:	

This is a decision on the Renewed Petition under 37 CFR 1.55(c), filed February 21, 2006, to accept an unintentionally delayed claim under 35 U.S.C. § 119(a)-(d) for the benefit of priority to foreign Taiwan Patent Application No. 093106107, filed March 9, 2004.

The petition is **GRANTED**.

This pending nonprovisional application was filed after November 29, 2000, and did not include a reference to the foreign application, for which benefit is now sought, within the later of four months from the actual filing date of the application or sixteen months from the filing date of the prior foreign application. Since the claim for priority is submitted after the period specified in 37 CFR 1.55(a)(1)(i), this is an appropriate petition under the provisions of 37 CFR 1.55(c).

A petition under 37 CFR 1.55(c) to accept an unintentionally delayed claim for priority requires:

(1) The nonprovisional application claiming the benefit of an earlier filing date must be filed on or after November 29, 2000;

(2) the claim submitted with the petition must identify the prior foreign application for which priority is claimed, as well as any foreign application for the same subject matter and having a filing date before that of the application for which priority is claimed, by the application number, country, and the filing date and be included either in an oath or declaration (37 CFR 1.63(c)(2)) or in an Application Data Sheet (37 CFR 1.76(b)(6);

(3) the surcharge as set forth in 37 CFR 1.17(t);

(4) a statement that the entire delay between the date the claim was due under 37 CFR 1.55(a)(1) and the date the claim was filed was unintentional (the Director may require additional information where there is a question whether the delay was unintentional); and

(5) the above-identified nonprovisional application must be filed within 12 months of the filing date of the foreign application.

This application was filed on March 2, 2005, which is after November 29, 2000 and within 12 months of March 9, 2004 (the filing date of the foreign application to which benefit is now being claimed). On February 21, 2006, an executed oath/declaration was received which identifies the foreign application for which priority is claimed by application number, country and filing date. The required petition fee of $1370.00 was submitted with the petition filed December 6, 2005. Lastly, petitioner has provided an adequate statement of unintentional delay.

All of the above requirements having been satisfied, the late claim for priority under 35 U.S.C. § 119(a)-(d) is accepted as being unintentionally delayed.

The granting of the petition to accept the delayed benefit claim to the prior-filed application under 37 CFR 1.55(c) should not be construed as meaning that this application is entitled to the benefit of the prior-filed application. In order for this application to be entitled to the benefit of the prior-filed application, all other requirements under 35 U.S.C. § 119(a)-(d) and 37 CFR 1.55(a)(1) must be met. Similarly, the fact that the corrected Filing Receipt accompanying this decision on petition includes the prior-filed application should not be construed as meaning that applicant is entitled to the claim for benefit of priority to the prior-filed application noted thereon. Accordingly, the examiner will, in due course, consider this benefit claim and determine whether this application is entitled to the benefit of the earlier filing date.

A corrected Filing Receipt, which includes the priority claim to the prior-filed foreign application, accompanies this decision on petition.

This application is being referred to Technology Center AU 2627 for examination in due course and for consideration by the examiner of the foreign priority claim under 35 U.S.C. § 119(a)-(d).

Inquiries directly pertaining to this matter may be directed to Derek Woods at (571) 272-3232.

Frances Hicks
Lead paralegal
Office of Petitions

ATTACHMENT: Corrected Filing Receipt

UNITED STATES PATENT AND TRADEMARK OFFICE

UNITED STATES DEPARTMENT OF COMMERCE
United States Patent and Trademark Office
Address: COMMISSIONER FOR PATENTS
P.O. Box 1450
Alexandria, Virginia 22313-1450
www.uspto.gov

APPL NO.	FILING OR 371 (c) DATE	ART UNIT	FIL FEE REC'D	ATTY.DOCKET NO	DRAWINGS	TOT CLMS	IND CLMS
11/068,812	03/02/2005	2627	1000	BHT-3111-592	6	9	1

CONFIRMATION NO. 1564

CORRECTED FILING RECEIPT

OC000000020613418

TROXELL LAW OFFICE PLLC
SUITE 1404
5205 LEESBURG PIKE
FALLS CHURCH, VA 22041

Date Mailed: 09/28/2006

Receipt is acknowledged of this regular Patent Application. It will be considered in its order and you will be notified as to the results of the examination. Be sure to provide the U.S. APPLICATION NUMBER, FILING DATE, NAME OF APPLICANT, and TITLE OF INVENTION when inquiring about this application. Fees transmitted by check or draft are subject to collection. Please verify the accuracy of the data presented on this receipt. **If an error is noted on this Filing Receipt, please mail to the Commissioner for Patents P.O. Box 1450 Alexandria Va 22313-1450. Please provide a copy of this Filing Receipt with the changes noted thereon. If you received a "Notice to File Missing Parts" for this application, please submit any corrections to this Filing Receipt with your reply to the Notice. When the USPTO processes the reply to the Notice, the USPTO will generate another Filing Receipt incorporating the requested corrections (if appropriate).**

Applicant(s)

Chih-Sheng Wei, Taoyuan, TAIWAN;

Assignment For Published Patent Application

BENQ Corporation

Power of Attorney: None

Domestic Priority data as claimed by applicant

Foreign Applications

TAIWAN 093106107 03/09/2004

If Required, Foreign Filing License Granted: 03/25/2005

The country code and number of your priority application, to be used for filing abroad under the Paris Convention, is US11/068,812

Projected Publication Date: Not Applicable

Non-Publication Request: No

Early Publication Request: No

Title

Optical pickup device with elastic member

Preliminary Class

369

PROTECTING YOUR INVENTION OUTSIDE THE UNITED STATES

Since the rights granted by a U.S. patent extend only throughout the territory of the United States and have no effect in a foreign country, an inventor who wishes patent protection in another country must apply for a patent in a specific country or in regional patent offices. Applicants may wish to consider the filing of an international application under the Patent Cooperation Treaty (PCT). An international (PCT) application generally has the same effect as a regular national patent application in each PCT-member country. The PCT process **simplifies** the filing of patent applications on the same invention in member countries, but **does not result** in a grant of "an international patent" and does not eliminate the need of applicants to file additional documents and fees in countries where patent protection is desired.

Almost every country has its own patent law, and a person desiring a patent in a particular country must make an application for patent in that country in accordance with its particular laws. Since the laws of many countries differ in various respects from the patent law of the United States, applicants are advised to seek guidance from specific foreign countries to ensure that patent rights are not lost prematurely.

Applicants also are advised that in the case of inventions made in the United States, the Director of the USPTO must issue a license before applicants can apply for a patent in a foreign country. The filing of a U.S. patent application serves as a request for a foreign filing license. The application's filing receipt contains further information and guidance as to the status of applicant's license for foreign filing.

Applicants may wish to consult the USPTO booklet, "General Information Concerning Patents" (specifically, the section entitled "Treaties and Foreign Patents") for more information on timeframes and deadlines for filing foreign patent applications. The guide is available either by contacting the USPTO Contact Center at 800-786-9199, or it can be viewed on the USPTO website at http://www.uspto.gov/web/offices/pac/doc/general/index.html.

For information on preventing theft of your intellectual property (patents, trademarks and copyrights), you may wish to consult the U.S. Government website, http://www.stopfakes.gov. Part of a Department of Commerce initiative, this website includes self-help "toolkits" giving innovators guidance on how to protect intellectual property in specific countries such as China, Korea and Mexico. For questions regarding patent enforcement issues, applicants may call the U.S. Government hotline at 1-866-999-HALT (1-866-999-4158).

LICENSE FOR FOREIGN FILING UNDER
Title 35, United States Code, Section 184
Title 37, Code of Federal Regulations, 5.11 & 5.15

GRANTED

The applicant has been granted a license under 35 U.S.C. 184, if the phrase "IF REQUIRED, FOREIGN FILING LICENSE GRANTED" followed by a date appears on this form. Such licenses are issued in all applications where the conditions for issuance of a license have been met, regardless of whether or not a license may be required as set forth in 37 CFR 5.15. The scope and limitations of this license are set forth in 37 CFR 5.15(a) unless an earlier license has been issued under 37 CFR 5.15(b). The license is subject to revocation upon written notification. The date indicated is the effective date of the license, unless an earlier license of similar scope has been granted under 37 CFR 5.13 or 5.14.

This license is to be retained by the licensee and may be used at any time on or after the effective date thereof

unless it is revoked. This license is automatically transferred to any related applications(s) filed under 37 CFR 1.53(d). This license is not retroactive.

The grant of a license does not in any way lessen the responsibility of a licensee for the security of the subject matter as imposed by any Government contract or the provisions of existing laws relating to espionage and the national security or the export of technical data. Licensees should apprise themselves of current regulations especially with respect to certain countries, of other agencies, particularly the Office of Defense Trade Controls, Department of State (with respect to Arms, Munitions and Implements of War (22 CFR 121-128)); the Bureau of Industry and Security, Department of Commerce (15 CFR parts 730-774); the Office of Foreign Assets Control, Department of Treasury (31 CFR Parts 500+) and the Department of Energy.

NOT GRANTED

No license under 35 U.S.C. 184 has been granted at this time, if the phrase "IF REQUIRED, FOREIGN FILING LICENSE GRANTED" DOES NOT appear on this form. Applicant may still petition for a license under 37 CFR 5.12, if a license is desired before the expiration of 6 months from the filing date of the application. If 6 months has lapsed from the filing date of this application and the licensee has not received any indication of a secrecy order under 35 U.S.C. 181, the licensee may foreign file the application pursuant to 37 CFR 5.15(b).

UNITED STATES PATENT AND TRADEMARK OFFICE

Commissioner for Patents
United States Patent and Trademark Office
P.O. Box 1450
Alexandria, VA 22313-1450
www.uspto.gov

Jean-Hway Lee
P.O. Box No. 6-57
Junghe, Taipei 235
TAIWAN

COPY MAILED

MAY 1 2 2008

OFFICE OF PETITIONS

In re Application of Lee :
Application No. 11/068,814 :
Filing Date: March 2, 2005 :
For: Luminous Ornaments Assemblies :

Decision on Petition

This is a decision on the petition under 37 CFR 1.181, filed December 12, 2007, to withdraw the holding of abandonment.

The petition is **granted.**

The above-identified application was held abandoned for failure to submit the issue fee and publication fee in a timely manner in reply to the Notice of Allowance mailed May 2, 2006, which set a statutory period for reply of three (3) months. A Notice of Abandonment was mailed on September 11, 2006.

Petitioner requests the Office withdraw the holding of abandonment. Petitioner has established non-receipt of the Notice of Allowance. Therefore, the Notice of Abandonment is hereby vacated and the holding of abandonment withdrawn.

A Notice of Allowability was mailed with the Notice of Allowance on May 2, 2006. Since petitioner did not receive the Notice of Allowance, it is presumed petitioner did not receive the Notice of Allowability. Therefore, both the Notice of Allowance and Notice of Allowability mailed on May 2, 2006, are vacated.

Technology Center Art Unit 2874 will be informed of the instant decision. Thereafter, the Technology Center's technical support staff will mail a new Notice of Allowance and a new Notice of Allowability. The time period for responding to the new notices will be set to run from the mailing date of the new notices.

Telephone inquiries regarding this communication should be directed to Petitions Attorney Steven Brantley at (571) 272-3203.

Charles Steven Brantley
Senior Petitions Attorney
Office of Petitions

24273

JAN 15 2009
PATENT & TRADEMARK OFFICE

1-16-09

11 068850

Certificate of Express or First-Class Mailing

I hereby certify that I have deposited this correspondence with the US Postal Service as first-class or, if a mailing-label number is given below, as express mail addressed to Comm. of Patents, Box 1450, Alexandria, VA 22313-1450 on the below-given date.

JAN 15 2009
Date

EM130045105
Express-mail label number

Signature

IN THE U.S. PATENT AND TRADEMARK OFFICE

Inventor	Sebastian SOMMER et al
Patent No.	7,461,438
Issued	9 December 2008
For	APPARATUS AND METHOD FOR APPLYING FINISHING AGENTS ONTO A NONWOVEN WEB

Mail Stop PETITIONS
Commissioner for Patents
Post Office Box 1450
Alexandria, VA 22313-1450

TRANSMITTAL LETTER

In the above-mentioned Letters Patent, the company name of the assignee is incorrect.

The correct name should be:

- - Reifenhauser GmbH & Co. Maschinenfabrik - -

It is therefore respectfully requested that the Letters Patent be corrected, and a new Letters Patent be issued. Please charge by the enclosed PTO-2038 to account 18-2025 of the undersigned, since the originally submitted papers were incorrect.

Certificate
JAN 22 2009
of Correction

01/16/2009 SSESHE1 00000036 7461438
01 FC:1811 100.00 OP

If this request is granted, please forward it to the Certificates of Correction Branch, for issuance of a Certificate of Correction.

Respectfully submitted,
Karl F. Ross P.C.

By: Andrew Wilford, 26,597
Attorney for Applicant

5 January 2009
5683 Riverdale Avenue Box 900
Bronx, NY 10471-0900
Cust. No.: 535
Tel: (718) 884-6600
Fax: (718) 601-1099

pf
Enclosure: PTO SB/44 (Also PTO form 1050) Certificate of Correction
PTO-2038

Certificate of Express or First-Class Mailing

I hereby certify that I have deposited this correspondence with the US Postal Service as first-class or, if a mailing-label number is given below, as express mail addressed to Comm. of Patents, Box 1450, Alexandria, VA 22313-1450 on the below-given date.

24273

Date

PTO/SB/44

Express-mail label number

(Also Form PTO-1050)

Signature

UNITED STATES PATENT AND TRADEMARK OFFICE
CERTIFICATE OF CORRECTION

PATENT NO. : 7,461,438
DATED : 9 December 2008
INVENTORS : Sebastian SOMMER et al

It is certified that an error appears in the above-identified patent and that said Letters Patent is hereby corrected as shown below:

The Assignee company name should be shown as:

- - Reifenhauser GmbH & Co. Maschinenfabrik - -

Andrew Wilford, 26,597

January 5, 2009

Mailing address of sender:

Patent No. 7,461,438

The Firm of Karl F. Ross P.C.
Customer Number 535
5683 Riverdale Avenue Box 900
Riverdale (Bronx), NY 10471-0900

UNITED STATES PATENT AND TRADEMARK OFFICE

COMMISSIONER FOR PATENTS
UNITED STATES PATENT AND TRADEMARK OFFICE
P.O. BOX 1450
ALEXANDRIA, VA 22313-1450
www.uspto.gov

Thomas L. Irving
FINNEGAN, HENDERSON, FARABOW
GARRETT & DUNNER , L.L.P.
901 New York Avenue, N.W.
Washington DC 20001-4413

COPY MAILED

OCT 0 2 2006

OFFICE OF PETITIONS

Applicant: Malle et al.
Appl. No.: 11/068,851
Filing Date: Marc 2, 2005
Title: COMPOSITION TO PERMANENTLY RESHAPE THE HAIR CONTAINING AT LEAST ONE DICARBOXYDITHIOL
Attorney Docket No.: 09763.0001-00
Pub. No.: US 2005/0201964 A1
Pub. Date: September 15, 2005

This is a decision on the request for corrected of patent application publication under 37 CFR 1.221(b), filed on November 15, 2005, for the above-identified application.

The request is granted.

The corrected patent application publication will be published in due course, unless the patent issues before the application is republished.

Inquiries relating to this matter may be directed to Mark O. Polutta at (571) 272-7709 (voice).

Mark O. Polutta
Office of Patent Legal Administration
Office of the Deputy Commissioner
for Patent Examination Policy

UNITED STATES PATENT AND TRADEMARK OFFICE

Commissioner for Patents
United States Patent and Trademark Office
P.O. Box 1450
Alexandria, VA 22313-1450
www.uspto.gov

COPY MAILED

OCT 1 3 2005

OFFICE OF PETITIONS

HELLER EHRMAN LLP
275 MIDDLEFIELD ROAD
MENLO PARK, CA 94025-3506

In re Application of
Raitano, Ge, Jakobovits, Challita, Faris
Application No.: 11/068,859
Filed: February 28, 2005
Attorney Docket No: 39766-01631P1C1C1
For: **NUCLECIC ACID AND CORRESPONDING PROTEIN ENTITLED 98P4B6 USEFUL IN TREATMENT AND DETECTION OF CANCER**

: DECISION ACCORDING
: RULE 47(a) STATUS

This is in response to the petition under 37 CFR 1.47(a), filed September 14, 2005.

The petition is **GRANTED**.

The above-identified application and papers have been reviewed and found in compliance with 37 CFR 1.47(a). This application is hereby accorded Rule 1.47(a) status.

The above-cited application was filed on February 28, 2005, without a properly executed declaration. On April 25, 2005, the Office of Initial Patent Examination mailed a Notice to File Missing Parts of Nonprovisional Application requiring, a proper declaration and payment of a surcharge, and replacement drawings. The instant petition was filed responsively on September 14, 2005, with a request for extension of time within the third month.

Petitioner has shown that inventor Faris has constructively refused to join the prosecution of the application. The above-identified application and papers have been reviewed and found in compliance with 37 CFR 1.47(a). This application is hereby accorded Rule 1.47(a) status.

The petition fee of $200.00 will be charged to deposit account 08-1641.

As provided in Rule 1.47(c), this Office will forward notice of this application's filing to the non-signing inventor at the addresses given in the petition. Notice of the filing of this application will also be published in the Official Gazette.

This application will be directed to the Office of Initial Patent Examination for further processing.

Telephone inquiries regarding this decision should be directed to the undersigned at (571) 272-3222.

Kenya A. McLaughlin
Petitions Attorney
Office of Petitions

UNITED STATES PATENT AND TRADEMARK OFFICE

Commissioner for Patents
United States Patent and Trademark Office
P.O. Box 1450
Alexandria, VA 22313-1450
www.uspto.gov

MORRISON & FOERSTER LLP
1650 TYSONS BOULEVARD
SUITE 400
MCLEAN VA 22102

COPY MAILED

JUN 29 2007

OFFICE OF PETITIONS

In re Application of :
THANGARAJ, Raj N. et al. :
Application No. 11/068,898 :
Filed: March 02, 2005 :
Attorney Docket No. **146712011300** :

DECISION ON PETITION
TO WITHDRAW
FROM RECORD

This is a decision on the Request to Withdraw as attorney or agent of record under 37 C.F.R. § 1.36(b), filed March 30, 2007.

The request is **APPROVED**.

A grantable request to withdraw as attorney/agent of record must be signed by every attorney/agent seeking to withdraw or contain a clear indication that one attorney is signing on behalf of another/others. A request to withdraw will not be approved unless at least 30 (thirty) days would remain between the date of approval and the later of the expiration date of a time to file a response or the expiration date of the maximum time period which can be extended under 37 C.F.R. § 1.136(a).

The request was signed by Peter J. Davis on behalf of all attorneys of record who are associated with customer No. 25227. All attorneys/agents associated have been withdrawn. Applicant is reminded that there is no attorney of record at this time.

The request to change the correspondence of record is not acceptable as the requested correspondence address is not that of: (1) the first named signing inventor; or (2) an intervening assignee of the entire interest under 37 C.F.R 3.71. All future communications from the Office will be directed to the first named signing inventor.

There are no outstanding office actions at this time.

Telephone inquiries concerning this decision should be directed to Michelle R. Eason at 571-272-4231.

T. Williams

Terri Williams
Petitions Examiner
Office of Petitions

cc: **RAJ N. THANGARAJ**
40580 LA PURISSIMA WAY
FREMONT, CA 94539

cc: **DARBY & DARBY P.C.**
1500 K. STREET, N.W.
SUITE 250
WASHINGTON, D.C. 20005-1714

UNITED STATES PATENT AND TRADEMARK OFFICE

UNITED STATES DEPARTMENT OF COMMERCE
United States Patent and Trademark Office
Address: COMMISSIONER FOR PATENTS
P.O. Box 1450
Alexandria, Virginia 22313-1450
www.uspto.gov

APPLICATION NUMBER	FILING OR 371 (c) DATE	FIRST NAMED APPLICANT	ATTY. DOCKET NO./TITLE
11/068,898	03/02/2005	Raj Nagappan Thangaraj	146712011300

CONFIRMATION NO. 1245

OC000000024500997

25227
MORRISON & FOERSTER LLP
1650 TYSONS BOULEVARD
SUITE 400
MCLEAN, VA 22102

Date Mailed: 06/22/2007

NOTICE REGARDING CHANGE OF POWER OF ATTORNEY

This is in response to the Power of Attorney filed 03/30/2007.

- The withdrawal as attorney in this application has been accepted. Future correspondence will be mailed to the new address of record. 37 CFR 1.33.

Michelle R. Eriksen

Office of Initial Patent Examination (571) 272-4000, or 1-800-PTO-9199

FORMER ATTORNEY/AGENT COPY

UNITED STATES PATENT AND TRADEMARK OFFICE

Commissioner for Patents
United States Patent and Trademark Office
P.O. Box 1450
Alexandria, VA 22313-1450
www.uspto.gov

Jeffrey D. Sullivan
Baker, Botts, LLP
30 Rockefeller Plaza
44th Floor
New York, NY 10112-4498

COPY MAILED

APR 13 2007

OFFICE OF PETITIONS

In re Application of	:	
Tetsu Koyama et al.	:	
Application No. 11/068,907	:	DECISION ON PETITION
Filed: March 2, 2005	:	TO WITHDRAW
Attorney Docket No. MAE 348	:	FROM RECORD
	:	

This is a decision on the Request to Withdraw as attorney or agent of record under 37 C.F.R. § 1.36(b), filed February 6, 2007.

The request is **NOT APPROVED**.

A grantable request to withdraw as attorney/agent of record must be signed by every attorney/agent seeking to withdraw or contain a clear indication that one attorney is signing on behalf of another/others. A request to withdraw will not be approved unless at least 30 (thirty) days would remain between the date of approval and the later of the expiration date of a time to file a response or the expiration date of the maximum time period which can be extended under 37 C.F.R. § 1.136(a).

The request cannot be approved because no reasons for withdrawal have been provided. The Office cannot, at this time, determine whether practitioner's request is one of the mandatory or permissive reasons enumerated in 37 CFR 10.40. Any subsequent requests must include reasons for withdrawal. Please note that there is a space provided for on PTO/SB/83 (Request to Withdraw as Attorney or Agent) to supply practitioner's reasons.

It is also noted that the applicant mentioned on the request for withdrawal, Hedge M. Gopalkrishna, is not an inventor in this application. Also the customer number 21003 is not associated with this application as the applicant appearing on the request is not an applicant in this case and since the customer number is not associated with this case, it is apparent that this request was not intended in this application. Requestor should file the request to withdraw in the correct application file.

A copy of this decision is being mailed to the correspondence address of record noted below and a courtesy copy of this decision is also being mailed to the correspondence address noted in the petition.

All future communications from the Office will continue to be directed to the above-listed address until otherwise notified by applicant.

Telephone inquiries concerning this decision should be directed to Kimberly Inabinet at 571-272- 4618.

Frances Hicks
Petitions Examiner
Office of Petitions

cc: Jeffrey D. Sullivan
Rabin & Berdo, PC
1101 14th Street, NW Ste. 500
Washington, DC 20005

cc: James Wan
Alban, Tay, Mahtani & De Silva
30 Robinson Road #07-01
Robinson Point
Singapore 068911

SPE RESPONSE FOR CERTIFICATE OF CORRECTION

Paper No.: _____

DATE : March 16, 2007

TO SPE OF : ART UNIT 3742

SUBJECT : Request for Certificate of Correction for Appl. No. 11/068920 patent No.: 7098430

Please respond to this request for a certificate of correction within 7 days.

Please review the requested changes/corrections as shown in the **COCIN** document(s) in the IFW application image. No new matter should be introduced, nor should the scope or meaning of the claims be changed.

Please complete the response (see below) and forward the completed response to scanning using document code **COCX**.

Magdalene Talley

Certificates of Correction Branch

703-308-9390 ext. 116

Thank You For Your Assistance

The request for issuing the above-identified correction(s) is hereby:

Note your decision on the appropriate box.

- ☒ **Approved** ML 7/28/2007 — **All** changes apply.
- ☐ **Approved in Part** — Specify below which changes **do not** apply.
- ☐ **Denied** — State the reasons for denial below.

Comments: _____

SPE

7/30/07

Art Unit

UNITED STATES PATENT AND TRADEMARK OFFICE

Commissioner for Patents
United States Patent and Trademark Office
P.O. Box 1450
Alexandria, VA 22313-1450
www.uspto.gov

MAY 17 2005

Wenderoth, Lind & Ponack, L.L.P.
2033 K Street, N.W.
Suite 800
Washington, DC 20006-1021

In re application of	:	**DECISION ON PETITION**
Donald R. Craul	:	**TO MAKE SPECIAL**
Application No. 11/068,926	:	**(APPLICANT'S AGE)**
Filed: March 2, 2005	:	
For: PLANT BENCH FOR USE IN A GREENHOUSE OR NURSEY STRUCTURE, AND A GREENHOUSE OR NURSEY STRUCTURE INCLUDING THE PLANT BENCH		

This is a decision on the petition submitted on March 2, 2005 under 37 CFR 1.102 (c) to make the above-identified application special under the accelerated examination procedure set forth in MPEP 708.02, Section IV: Applicant's Age.

The petition is **GRANTED**.

An application may be accorded special status upon the filing of a petition providing evidence showing that the applicant is at least 65 years old. Such a showing may be provided by evidence such as a birth certificate or a statement from the applicant.

The evidence submitted with the petition is a declaration signed by David R. Craul indicating that he is at least 65 years of age.

The examiner is directed (1) to make an interference search for possible interfering applications, (2) to promptly examine this application out of turn, and (3) if any interfering application is discovered, to examine such application simultaneously and state in the first official letter of such application that it is being taken out of turn because of a possible interference.

Petitioner is advised that this application will continue to be special, throughout its entire prosecution and pendency, including interference or appeal, if any, only if petitioner makes a prompt ***bona fide*** effort, in response to each Office action, to place the application in condition for allowance, even if it is necessary to conduct an interview with the examiner to accomplish this purpose.

SUMMARY: Petition to Make Special **GRANTED**.

Kenneth J. Dorner
Special Programs Examiner
Technology Center 3600
(703) 308-0866

KJD/dcg: 4/6/05

SPE RESPONSE FOR CERTIFICATE OF CORRECTION

Paper No.:20080811

DATE : August 11, 2008

TO SPE OF : ART UNIT 2852

SUBJECT : Request for Certificate of Correction on Patent No.: 7,340,191

A response is requested with respect to the accompanying request for a certificate of correction.

Please complete this form and return with file, within **7** days to:
Certificates of Correction Branch - ST (South Tower) 9A22
Palm location **7590** - Tel. No. (703) 305-8309

With respect to the change(s) requested, correcting Office and/or Applicant's errors, should the patent read as shown in the certificate of correction? No new matter should be introduced, nor should the scope or meaning of the claims be changed.

Thank You For Your Assistance **Certificates of Correction Branch**

The request for issuing the above-identified correction(s) is hereby:

Note your decision on the appropriated box.

☒ **Approved** All changes apply.

☐ **Approved in Part** Specify below which changes **do not** apply.

☐ **Denied** State the reasons for denial below.

Comments:

SPE: /David M. Gray/ Art Unit 2852

SPE RESPONSE FOR CERTIFICATE OF CORRECTION

Paper No.:20081215

DATE : December 16, 2008

TO SPE OF : ART UNIT 2852

SUBJECT : Request for Certificate of Correction on Patent No.: 7,340,191

A response is requested with respect to the accompanying request for a certificate of correction.

Please complete this form and return with file, within **7** days to:
Certificates of Correction Branch - PK 3-910
Palm location **7590** - Tel. No. 305-8201

With respect to the change(s) requested, correcting Office and/or Applicant's errors, should the patent read as shown in the certificate of correction? No new matter should be introduced, nor should the scope or meaning of the claims be changed.

Thank You For Your Assistance **Certificates of Correction Branch**

The request for issuing the above-identified correction(s) is hereby:
Note your decision on the appropriate box.

☐ **Approved** **All** changes apply.

☒ **Approved in Part** Specify below which changes **do not** apply.

☐ **Denied** State the reasons for denial below.

Comments:

The request regarding COLUMN 3: Line 45, "an" should read --a--. This actually should be "an"

Further, the request regarding COLUMN 6: Line 54, "degree" should read --degress--. The replacement text includes a typographical error /David M. Gray/ SPE 2852

/David M. Gray/ SPE2852

UNITED STATES PATENT AND TRADEMARK OFFICE

Commissioner for Patents
United States Patent and Trademark Office
P.O. Box 1450
Alexandria, VA 22313-1450
www.uspto.gov

GERALD W. SPINKS
103 EDWARDS STREET
ABBEVILLE LA 70510

COPY MAILED

JUN 2 0 2008

OFFICE OF PETITIONS

In re Application of
Yang Xu, et al.
Application No. 11/068,941
Filed: February 28, 2005
Attorney Docket No. 304BSC/US40

DECISION ON PETITION
TO WITHDRAW
FROM RECORD

This is a decision on the Request to Withdraw as attorney or agent of record under 37 C.F.R. § 1.36(b), filed November 29, 2007.

The request is **NOT APPROVED**.

A grantable request to withdraw as attorney/agent of record must be signed by every attorney/agent seeking to withdraw or contain a clear indication that one attorney is signing on behalf of another/others. A request to withdraw will not be approved unless at least 30 (thirty) days would remain between the date of approval and the later of the expiration date of a time to file a response or the expiration date of the maximum time period which can be extended under 37 C.F.R. § 1.136(a).

The Office cannot approve the request at this time since the reasons provided do not meet any of the conditions under the mandatory or permissive categories enumerated in 37 CFR 10.40. Section 10.40 of Title 37 of the Code of Federal Regulation states, "[a] practitioner shall not withdraw from employment in a proceeding before the Office without permission from the Office[.]" More specifically, 37 CFR 10.40 states, "[i]f paragraph (b) of this section is not applicable, a practitioner may not request permission to withdraw in matter pending before the Office unless such request or such withdrawal is" for one the permissive reasons listed in 37 CFR 10.40(c). The reasons set forth in the request, "assignee has agreed to assume responsibility for further prosecution of this case", does not meet any the of conditions set forth in 37 CFR 10.40.

In order to request or take action in a patent matter, the assignee must establish its ownership of the patent to the satisfaction of the Director. In this regard, a Statement under 37 CFR 3.73(b) must have either: (i) documentary evidence of a chain of title from the original owner to the assignee (*e.g.*, copy of an executed assignment), and a statement affirming that the documentary

evidence of the chain of title from the original owner to the assignee was or concurrently is being submitted for recordation pursuant to § 3.11; or (ii) a statement specifying where documentary evidence of a chain of title from the original owner to the assignee is recorded in the assignment records of the Office (*e.g.*, reel and frame number).

All future communications from the Office will continue to be directed to the above-listed address until otherwise notified by applicant.

Telephone inquiries concerning this decision should be directed to undersigned at 571-272-1642.

April M. Wise
Petitions Examiner
Office of Petitions

cc: CAROL A. ROWOLD
BAKER HUGHES INCORPORATED
PO BOX 4740
HOUSTON, TX 77210-4740

UNITED STATES PATENT AND TRADEMARK OFFICE

UNITED STATES DEPARTMENT OF COMMERCE
United States Patent and Trademark Office
Address: COMMISSIONER FOR PATENTS
P.O. Box 1450
Alexandria, Virginia 22313-1450
www.uspto.gov

BACHMAN & LAPOINTE, P.C.
900 CHAPEL STREET
SUITE 1201
NEW HAVEN, CT 06510

Mail Date: 04/22/2010

Applicant	: Jaewon Park	: DECISION ON REQUEST FOR
Patent Number	: 7604846	: RECALCULATION of PATENT
Issue Date	: 10/20/2009	: TERM ADJUSTMENT IN VIEW
Appliction No	: 11/068,942	: OF WYETH AND NOTICE OF INTENT TO
Filed	: 02/28/2005	: ISSUE CERTIFICATE OF CORRECTION
		:

The Request for Recalculation is **GRANTED** to the extent indicated.

The patent term adjustment has been determined to be **1069** days. The USPTO will *sua sponte* issue a certificate of correction reflecting the amount of PTA days determined by the recalculation.

Prior to the issuance of the certificate of correction, the USPTO will afford patentee an opportunity to be heard and request reconsideration. Accordingly, patentee has **one month or thirty (30) days**, whichever is longer, to file a request for reconsideration of this patent term adjustment calculation. See 35 U.S.C. 154(b)(3)(B)(ii) and 37 CFR 1.322(a)(4). No extensions of time will be granted under 37 CFR 1.136.

Patentee should use document code PET.OP if electronically filing a request for reconsideration of this patent term adjustment calculation. The patentee must also include the information required by 37 CFR 1.705(b)(2) and the fee required by 37 CFR 1.18(e). If patentee does not file a timely request for reconsideration of this patent term adjustment calculation including the information required by 37 CFR 1.705(b)(2) and the fee required by 37 CFR 1.18(e), the USPTO will issue a certificate of correction reflecting the PTA determination noted above.

Patentee should be aware that in order to preserve the right to review in the United States District Court for the District of Columbia of the USPTO patent term adjustment determination, patentee must ensure that he or she also take the steps required under 35 U.S.C. 154(b)(4)(A) in a timely manner. Nothing in the request for recalculation should be construed as providing an alternative time frame for commencing a civil action under 35 U.S.C. 154(b)(4)(A).

Any questions concerning this decision should be directed to the Office of Patent Legal Administration at 571-272-7702.

UNITED STATES PATENT AND TRADEMARK OFFICE

UNITED STATES DEPARTMENT OF COMMERCE
United States Patent and Trademark Office
Address: COMMISSIONER FOR PATENTS
P.O. Box 1450
Alexandria, Virginia 22313-1450
www.uspto.gov

DRINKER BIDDLE & REATH
ATTN: INTELLECTUAL PROPERTY GROUP
ONE LOGAN SQUARE, SUITE 2000
PHILADELPHIA, PA 19103-6996

Mail Date: 04/20/2010

Applicant	: John E. Perry	: DECISION ON REQUEST FOR
Patent Number	: 7587871	: RECALCULATION of PATENT
Issue Date	: 09/15/2009	: TERM ADJUSTMENT IN VIEW
Appliction No	: 11/068,993	: OF WYETH
Filed	: 02/28/2005	:
		:

The Patentee's Request for Recalculation is **DISMISSED.**

This Request is deemed ineligible for consideration for one or more of the following reasons:

(A). The patent for which PTA recalculation is requested is either a design or reissue application or is a reexamination proceeding;

(B). The patent for which PTA recalculation is requested resulted from a utility or plant application filed under 35 USC 111(a) before May 29, 2000 and no CPA filed in the application on/after May 29, 2000;

(C). The patent for which PTA recalculation is requested resulted from an international application in which the international filing date was before May 29, 2000 and no CPA filed in the application on/after May 29, 2000;

(D). The patent for which PTA recalculation is requested issued on/after March 2, 2010;

(E). The Request for Recalculation was filed more than 180 days after the grant date of the patent and the request was not filed within two months of a dismissal of a request for reconsideration of the of the patent term under 37 CFR 1.705(d);

(F). The Request for Recalculation is not solely limited to USPTO pre-Wyeth interpretation of 35 U.S.C. 154(b)(2)(A);

or

(G). A civil action was filed pursuant to 35 U.S.C. 154(b)(4)(A)concerning the same patent at issue in this request.

Patentee may file a reply to this decision dismissing the Request for Recalculation. Patentee must file such reply within one month or thirty days, whichever is longer, of the mail date of the decision dismissing the Request for Recalculation. No fee is required if patentee is asserting in the reply that the dismissal for ineligibility is improper.

Patentee should use document code PET.OP if electronically filing a reply to this dismissal. If the USPTO finds that the request was improperly deemed ineligible, the USPTO will mail applicant a recalculation determination.

Patentee should be aware that in order to preserve the right to review in the United States District Court for the District of Columbia of the USPTO patent term adjustment determination, patentee must ensure that he or she also take the steps required under 35 U.S.C. 154(b)(4)(A). Nothing in the request for recalculation should be construed as providing an alternative time frame for commencing a civil action under 35 U.S.C. 154 (b)(4)(A).

Any questions concerning this decision should be directed to the Office of Patent Legal Administration at 571-272-7702.

UNITED STATES PATENT AND TRADEMARK OFFICE

Commissioner for Patents
United States Patent and Trademark Office
P.O. Box 1450
Alexandria, VA 22313-1450
www.uspto.gov

QUINN LAW GROUP, PLLC
39555 ORCHARD HILL PLACE
SUITE # 520
NOVI, MI 48375

COPY MAILED

DEC 2 1 2006

OFFICE OF PETITIONS

In re Application of Nickola et al. :
Application No. 11/069,008 :
Filing Date: March 1,2 005 :
Attorney Docket No. SID0105PUS :

Decision on Petition

This is a decision on the petition under 37 CFR 1.181, filed October 3, 2006, to withdraw the holding of abandonment.

The petition is **granted.**

A non-final Office action was mailed February 28, 2006.

A reply to the Office action and a request for a three-month extension of time were filed August 25, 2006.

Unfortunately, the reply was initially misplaced by the USPTO. As a result, a Notice of Abandonment was mailed September 18, 2006.

The originally filed papers have been located and have been made part of the file.

The Notice of Abandonment is hereby vacated and the holding of abandonment withdrawn.

Technology Center Art Unit 2875 will be informed of the instant decision and the examiner will consider the merits of the papers filed August 25, 2006, in due course.

Telephone inquiries regarding this communication should be directed to Petitions Attorney Steven Brantley at (571) 272-3203.

Charles Steven Brantley
Senior Petitions Attorney
Office of Petitions

UNITED STATES PATENT AND TRADEMARK OFFICE

UNITED STATES DEPARTMENT OF COMMERCE
United States Patent and Trademark Office
Address: COMMISSIONER FOR PATENTS
P.O. Box 1450
Alexandria, Virginia 22313-1450
www.uspto.gov

APPLICATION NO.	FILING DATE	FIRST NAMED INVENTOR	ATTORNEY DOCKET NO.	CONFIRMATION NO.
11/069,010	03/01/2005	Michael Har-Noy	152.12-0003	8885

27367 7590 01/04/2008
WESTMAN CHAMPLIN & KELLY, P.A.
SUITE 1400
900 SECOND AVENUE SOUTH
MINNEAPOLIS, MN 55402-3319

EXAMINER
BELYAVSKYI, MICHAIL A

ART UNIT	PAPER NUMBER
1644	

MAIL DATE	DELIVERY MODE
01/04/2008	PAPER

Please find below and/or attached an Office communication concerning this application or proceeding.

The time period for reply, if any, is set in the attached communication.

UNITED STATES PATENT AND TRADEMARK OFFICE

Commissioner for Patents
United States Patent and Trademark Office
P.O. Box 1450
Alexandria, VA 22313-1450
www.uspto.gov

[redacted] 4 2008

WESTMAN CHAMPLIN & KELLY, P.A.
SUITE 1400
900 SECOND AVENUE SOUTH
MINNEAPOLIS MN 55402-3319

In re Application of	:
Michael Har-Noy	:
Serial No.: 11/069,010	: DECISION ON REQUEST
Filed: March 1, 2005	:
Attorney Docket No.: 152.12-0003	:

This is in response to the request under 37 CFR 1.20, filed October 12, 2007, requesting that the priority claim be withdrawn.

The request is **GRANTED**.

Should there be any questions please contact William R. Dixon, Jr., by letter addressed to Director, TC 1600, at the address listed above, or by telephone at 571-272-0519 or by facsimile sent to the general Office facsimile number 571-273-8300.

William R. Dixon, Jr.
Special Program Examiner
Technology Center 1600

UNITED STATES PATENT AND TRADEMARK OFFICE

Commissioner for Patents
United States Patent and Trademark Office
P.O. Box 1450
Alexandria, VA 22313-1450
www.uspto.gov

PROCOPIO, CORY, HARGREAVES & SAVITCH LLP
530 B STREET
SUITE 2100
SAN DIEGO, CA 92101

COPY MAILED

JAN 17 2007

OFFICE OF PETITIONS

In re Application of	:	
Stone	:	
Application No. 11/069,019	:	DECISION ON PETITION
Filed: February 28, 2005	:	TO MAKE SPECIAL UNDER
Attorney Docket No. 110866-ISE17NP	:	37 CFR 1.102(c)(2)
	:	

This is a decision on the petition under 37 CFR 1.102(c)(2)(i) & (ii), filed August 17, 2006, to make the above-identified application special based on the invention (a) materially enhancing the quality of the environment as set forth in M.P.E.P. § 708.02, Section V and (b) materially contributing to certain categories related to energy resource as set forth in M.P.E.P. § 708.02, Section VI.

The petitions are **DISMISSED**.

A grantable petition to make an application special under 37 CFR 1.102(c)(2)(i) and MPEP § 708.02, Section V: Environmental Quality, must state that special status is sought because the invention materially enhances the quality of the environment by contributing to the restoration or maintenance of basic life-sustaining natural elements. If the disclosure is not clear on its face that the claimed invention materially enhances the quality of the environment by contributing to the restoration or maintenance of one of the basic life-sustaining natural elements, the petition must be accompanied by a statement by the applicant, assignee, or an attorney/agent registered to practice before the Office explaining how the materiality standard is met. No fee is required.

Petitioner's submission fails to meet the criteria set out with respect to materially enhancing the quality of the environment by contributing to the restoration or maintenance of basic life-sustaining natural elements as set forth in M.P.E.P. § 708.02 (V). The specification and claims as originally filed indicate the invention is directed to a method related to a hybrid electric vehicle drive cradle mounting assembly. However, the instant petition fails to met the materiality standard of 37 CFR 1.102(c)(2)(i). Although the invention may be directed to a method related to a hybrid electric vehicle, the materiality standard of the rule has not been met, i.e., petitioner has failed to state how the claimed invention contributes in as significant, substantial, or noticeable manner to the maintenance of basic life-sustaining natural elements. As a result, no contribution to the restoration or maintenance of basic life-sustaining natural elements has been persuasively shown.

A grantable petition to make an application special under 37 CFR 1.102(c)(2)(ii) and MPEP § 708.02, Section VI: Energy, must state that special status is sought because the invention materially contributes to (A) the discovery or development of energy resources, or (B) the more efficient utilization and

conservation of energy resources. Examples of inventions in category (A) would be developments in fossil fuels (natural gas, coal, and petroleum), hydrogen fuel technologies, nuclear energy, solar energy, etc. Category (B) would include inventions relating to the reduction of energy consumption in combustion systems, industrial equipment, household appliances, etc. If the application disclosure is not clear on its face that the claimed invention materially contributes to category (A) or (B), the petition must be accompanied by a statement under 37 CFR 1.102 by the applicant, assignee, or an attorney/agent registered to practice before the Office explaining how the materiality standard is met. No fee is required.

The instant petition, fails to meet the materiality standard of 37 CFR 102(c)(2)(ii). Although the disclosure may be generally directed to the development of hybrid electric vehicles, the materiality standard of the rule has not been met, i.e., petitioner has failed to state how the claimed invention contributes in a significant, substantial, or noticeable manner to the conservation of energy resources. Therefore, the issue is not whether hybrid electric vehicles in general are more energy efficient but rather how petitioner's inventions would contribute in a significant manner to the conservation of energy resources. Accordingly, it is unclear as to how the claimed invention would contribute in a significant manner to the development or conservation of energy resources.

This lack of meeting the materiality standards of 37 CFR 102(c)(2) (i) and (ii) does not permit the applicant to enjoy the benefit of advanced examination.

Further correspondence with respect to this matter should be addressed as follows:

By Mail: Mail Stop PETITION
Commissioner for Patents
P. O. Box 1450
Alexandria, VA 22313-1450

By hand: U. S. Patent and Trademark Office
Customer Service Window, Mail Stop Petitions
Randolph Building
401 Dulany Street
Alexandria, VA 22314

By FAX: (571) 273-8300

Telephone inquiries concerning this decision should be directed to Jefferey Harold at 571-272-7519, or to the undersigned at 571-272-7099.

All other inquiries concerning either the examination or status of the application should be directed to the Technology Center.

The application is being forwarded to the Technology Center Art Unit 3616 for action in its regular turn.

David Bucci
Petitions Examiner
Office of Petitions

UNITED STATES PATENT AND TRADEMARK OFFICE

Commissioner for Patents
United States Patent and Trademark Office
P.O. Box 1450
Alexandria, VA 22313-1450
www.uspto.gov

BAKER BOTTS LLP
2001 ROSS AVENUE
SUITE 600
DALLAS TX 75201-2980

COPY MAILED

SEP 28 2007

OFFICE OF PETITIONS

In re Application of :
Briaud, et al. :
Application No. 11/069,075 : ON PETITION
Filed: March 1, 2005 :
Attorney Docket No. 017575.1197

This is a decision on the petition to revive under 37 CFR 1.137(b), filed August 31, 2007.

The petition under 37 CFR 1.137(b) is **GRANTED**.

The above-identified application became abandoned for failure to timely pay the issue fee in response to the Notice of Allowance mailed February 26, 2007. This Notice set a statutory period for reply of three (3) months or issue fee transmittal. No issue fee having been received, the application became abandoned on May 27, 2007. A Notice of Abandonment was mailed on June 25, 2007.

With the instant petition, petitioner paid the petition fee, made the proper statement of unintentional delay, and submitted the required reply in the form of the issue fee.

It is not apparent whether the person signing the statement of unintentional delay was in a position to have firsthand or direct knowledge of the facts and circumstances of the delay at issue. Nevertheless, such statement is being treated as having been made as the result of a reasonable inquiry into the facts and circumstances of such delay. See 37 CFR 10.18(b) and Changes to Patent Practice and Procedure; Final Rule Notice, 62 Fed. Reg. 53131, 53178 (October 10, 1997), 1203 Off. Gaz. Pat. Office 63, 103 (October 21, 1997). In the event that such an inquiry has not been made, petitioner must make such an inquiry. If such inquiry results in the discovery that it is not correct that the entire delay in filing the required reply from the due date for the reply until the filing of a grantable petition pursuant to 37 CFR 1.137(b) was unintentional, petitioner must notify the Office.

The matter is being forwarded to the Office of Patent Publication for processing into a patent.

Telephone inquiries concerning this decision should be directed to the undersigned at 571-272-3207.

Cliff Congo
Petitions Attorney
Office of Petitions

UNITED STATES PATENT AND TRADEMARK OFFICE

Commissioner for Patents
United States Patent and Trademark Office
P.O. Box 1450
Alexandria, VA 22313-1450
www.uspto.gov

SCHWEGMAN LUNDBERG WOESSNER KLUTH PA
P.O. BOX 2938
MINNEAPOLIS, MN 55402

COPY MAILED

MAY 17 2007

OFFICE OF PETITIONS

In re Application of	:	
TOPOLSKY, et al.	:	
Application No. 11/069,089	:	DECISION ON PETITION
Filed: March 1, 2005	:	TO WITHDRAW
Attorney Docket No. BSZ-092CPDVCN2	:	FROM RECORD

This is a decision on the Request to Withdraw as attorney or agent of record under 37 C.F.R. § 1.36(b), filed December 19, 2006.

The request is **NOT APPROVED** as moot.

A review of the file record indicates that the power of attorney to SCHWEGMAN LUNDBERG WOESSNER KLUTH PA has been revoked by the assignee of the patent application on April 3, 2007. Accordingly, the request to withdraw under 37 C.F.R. § 1.36(b) is moot.

All future communications from the Office will continue to be directed to the below-listed address until otherwise notified by applicant.

Telephone inquires concerning this decision should be directed to the undersigned at 571-272-7253.

Monica A. Graves
Petitions Examiner
Office of Petitions

cc: **LAHIVE & COCKFIELD, LLP**
ONE POST OFFICE SQUARE
BOSTON MA 02109-2127

UNITED STATES PATENT AND TRADEMARK OFFICE

Commissioner for Patents
United States Patent and Trademark Office
P.O. Box 1450
Alexandria, VA 22313-1450
www.uspto.gov

MCCARTER & ENGLISH, LLP BOSTON
14th Floor
265 Franklin Street
Boston, MA 02110

MAILED

JUL 20 2009

OFFICE OF PETITIONS

In re Application of Tapolsky et al. :
Application No. 11/069,089 :
Filing Date: March 1, 2005 :
Attorney Docket No. 117744-09205 :

On Application For
Patent Term Adjustment

This is in response to the "Statement Under 37 C.F.R. § 1.705(b)(2)" filed May 12, 2009. Applicants submit the correct patent term adjustment to be indicated on the patent is one thousand two hundred sixty-eight (1,268) days, not eight hundred thirty-five (835) days as calculated by the Office as of the mailing of the initial determination of patent term adjustment. Applicants request this correction solely on the basis that the Office will take in excess of three years to issue this patent.

As the instant application for patent term adjustment requests reconsideration of the patent term adjustment as it relates to the Office's failure to issue the patent within 3 years of the filing date, the application for patent term adjustment under 37 CFR 1.705(b) is **DISMISSED as PREMATURE**.

Knowledge of the actual date the patent issues is required to calculate the amount, if any, of additional patent term patentee is entitled to for Office failure to issue the patent within 3 years. See 37 CFR 1.702(b). (This is true even where a request for continued examination (RCE) was filed). The computer will not undertake the § 1.702(b) calculation until the actual date of issuance of the patent has been determined. Likewise, the computer will not calculate any further Office delay under § 1.702(a)(4) or applicant delay under § 1.704(c)(10) until the actual date of issuance of the patent has been determined. As such, the Office can not make a determination on the correctness of the patent term adjustment until the patent has issued.

Requesting reconsideration of the patent term adjustment to be indicated on the patent under 37 CFR 1.705(b) based on the initial determination of patent term adjustment and a projected issuance date of the patent (or even the filing date of the request for continued examination) is premature. Accordingly, it is appropriate to dismiss as premature such a request.

Rather than file an application for patent term adjustment under 37 CFR 1.705(b) contesting the 37 CFR 1.702(b) calculation at the time of the mailing of the notice of allowance, applicant is advised that they may wait until the time of the issuance of the patent and file a request for reconsideration of the patent term adjustment pursuant to 37 CFR 1.705(d). As the USPTO does not calculate the amount of time earned pursuant to 37 CFR 1.702(b) until the time of the

issuance of the patent, the Office will consider any request for reconsideration of the patent term adjustment due to an error in the calculation of 37 CFR 1.702(b) to be timely if the request for reconsideration is filed within two months of the issuance of the patent. However, as to all other bases for contesting the initial determination of patent term adjustment received with the notice of allowance, applicant must timely file an application for patent term adjustment prior to the payment of the issue fee[1].

The fee of $200 set forth in 37 CFR 1.18(e) for consideration of the application for patent term adjustment under 37 CFR 1.705(b) has been charged to petitioner's deposit account.

Any request for reconsideration of the patent term adjustment indicated on the patent must be timely filed within 2 months after issuance pursuant to 37 CFR 1.705(d) and must include payment of the required fee under 37 CFR 1.18(e).

The Office of Data Management has been advised of this decision. This application is being referred to the Office of Data Management for issuance of the patent.

Telephone inquiries regarding this communication should be directed to Petitions Attorney Steven Brantley at (571) 272-3203.

Nancy Johnson
Senior Petitions Attorney
Office of Petitions

[1] For example, if applicant disputes both the calculation of patent term adjustment under 37 CFR 1.702(a)(1) for Office failure to mail a first Office action or notice of allowance not later than fourteen months after the date on which the application was filed and under 37 CFR 1.702(b) for Office failure to issue a patent within three years of the actual filing date of the application, then applicant must still timely file an application for patent term adjustment prior to the payment of the issue fee to contest the calculation of Office delay in issuing a first Office action or notice of allowance. See 37 CFR 1.705(b) and 35 U.S.C. 154(b)(3)(B). A dispute as to the calculation of the §1.702(a)(1) period raised on request for reconsideration of patent term adjustment under 37 CFR 1.705(d) will be dismissed as untimely filed.

UNITED STATES PATENT AND TRADEMARK OFFICE

UNITED STATES DEPARTMENT OF COMMERCE
United States Patent and Trademark Office
Address: COMMISSIONER FOR PATENTS
P.O. Box 1450
Alexandria, Virginia 22313-1450
www.uspto.gov

MCCARTER & ENGLISH, LLP BOSTON
265 Franklin Street
Boston, MA 02110

Mail Date: 04/21/2010

Applicant	: Gilles H. Tapolsky	: DECISION ON REQUEST FOR
Patent Number	: 7579019	: RECALCULATION of PATENT
Issue Date	: 08/25/2009	: TERM ADJUSTMENT IN VIEW
Appliction No	: 11/069,089	: OF WYETH
Filed	: 03/01/2005	:
		:

The Patentee's Request for Recalculation is **DISMISSED.**

This Request is deemed ineligible for consideration for one or more of the following reasons:

(A). The patent for which PTA recalculation is requested is either a design or reissue application or is a reexamination proceeding;

(B). The patent for which PTA recalculation is requested resulted from a utility or plant application filed under 35 USC 111(a) before May 29, 2000 and no CPA filed in the application on/after May 29, 2000;

(C). The patent for which PTA recalculation is requested resulted from an international application in which the international filing date was before May 29, 2000 and no CPA filed in the application on/after May 29, 2000;

(D). The patent for which PTA recalculation is requested issued on/after March 2, 2010;

(E). The Request for Recalculation was filed more than 180 days after the grant date of the patent and the request was not filed within two months of a dismissal of a request for reconsideration of the of the patent term under 37 CFR 1.705(d);

(F). The Request for Recalculation is not solely limited to USPTO pre-Wyeth interpretation of 35 U.S.C. 154(b)(2)(A);

or

(G). A civil action was filed pursuant to 35 U.S.C. 154(b)(4)(A)concerning the same patent at issue in this request.

Patentee may file a reply to this decision dismissing the Request for Recalculation. Patentee must file such reply within one month or thirty days, whichever is longer, of the mail date of the decision dismissing the Request for Recalculation. No fee is required if patentee is asserting in the reply that the dismissal for ineligibility is improper.

Patentee should use document code PET.OP if electronically filing a reply to this dismissal. If the USPTO finds that the request was improperly deemed ineligible, the USPTO will mail applicant a recalculation determination.

Patentee should be aware that in order to preserve the right to review in the United States District Court for the District of Columbia of the USPTO patent term adjustment determination, patentee must ensure that he or she also take the steps required under 35 U.S.C. 154(b)(4)(A). Nothing in the request for recalculation should be construed as providing an alternative time frame for commencing a civil action under 35 U.S.C. 154 (b)(4)(A).

Any questions concerning this decision should be directed to the Office of Patent Legal Administration at 571-272-7702.

UNITED STATES PATENT AND TRADEMARK OFFICE

UNITED STATES DEPARTMENT OF COMMERCE
United States Patent and Trademark Office
Address: COMMISSIONER FOR PATENTS
P.O. Box 1450
Alexandria, Virginia 22313-1450
www.uspto.gov

CARLSON, GASKEY & OLDS, P.C.
400 WEST MAPLE ROAD
SUITE 350
BIRMINGHAM, MI 48009

Mail Date: 05/12/2010

Applicant	: Steven W. Burd	: DECISION ON REQUEST FOR
Patent Number	: 7614235	: RECALCULATION of PATENT
Issue Date	: 11/10/2009	: TERM ADJUSTMENT IN VIEW
Application No	: 11/069,095	: OF WYETH AND NOTICE OF INTENT TO
Filed	: 03/01/2005	: ISSUE CERTIFICATE OF CORRECTION
		:

The Request for Recalculation is **GRANTED** to the extent indicated.

The patent term adjustment has been determined to be **1240** days. The USPTO will *sua sponte* issue a certificate of correction reflecting the amount of PTA days determined by the recalculation.

Prior to the issuance of the certificate of correction, the USPTO will afford patentee an opportunity to be heard and request reconsideration. Accordingly, patentee has **one month or thirty (30) days**, whichever is longer, to file a request for reconsideration of this patent term adjustment calculation. See 35 U.S.C. 154(b)(3)(B)(ii) and 37 CFR 1.322(a)(4). No extensions of time will be granted under 37 CFR 1.136.

Patentee should use document code PET.OP if electronically filing a request for reconsideration of this patent term adjustment calculation. The patentee must also include the information required by 37 CFR 1.705(b)(2) and the fee required by 37 CFR 1.18(e). If patentee does not file a timely request for reconsideration of this patent term adjustment calculation including the information required by 37 CFR 1.705(b)(2) and the fee required by 37 CFR 1.18(e), the USPTO will issue a certificate of correction reflecting the PTA determination noted above.

Patentee should be aware that in order to preserve the right to review in the United States District Court for the District of Columbia of the USPTO patent term adjustment determination, patentee must ensure that he or she also take the steps required under 35 U.S.C. 154(b)(4)(A) in a timely manner. Nothing in the request for recalculation should be construed as providing an alternative time frame for commencing a civil action under 35 U.S.C. 154(b)(4)(A).

Any questions concerning this decision should be directed to the Office of Patent Legal Administration at 571-272-7702.

UNITED STATES PATENT AND TRADEMARK OFFICE

Commissioner for Patents
United States Patent and Trademark Office
P.O. Box 1450
Alexandria, VA 22313-1450
www.uspto.gov

WINSTON & STRAWN LLP
PATENT DEPARTMENT
1700 K STREET, N.W.
WASHINGTON DC 20006

MAILED

JUN 23 2010

OFFICE OF PETITIONS

In re Application of

MOSHER, Michele L.
Application No. 11/069,096
Filed: March 01, 2005
Attorney Docket No. **105676-1**

DECISION ON PETITION
TO WITHDRAW
FROM RECORD

This is a decision on the Request to Withdraw as attorney or agent of record under 37 C.F.R. § 1.36(b), filed May 25, 2010.

The request is **APPROVED**.

A grantable request to withdraw as attorney/agent of record must be signed by every attorney/agent seeking to withdraw or contain a clear indication that one attorney is signing on behalf of another/others. The Office requires the practitioner(s) requesting withdrawal to certify that he, she, or they have: (1) given reasonable notice to the client, prior to the expiration of the response period, that the practitioner(s) intends to withdraw from employment; (2) delivered to the client or a duly authorized representative of the client all papers and property (including funds) to which the client is entitled; and (3) notified the client of any responses that may be due and the time frame within which the client must respond, pursuant 37 CFR 10.40(c).

The request was signed by Scott Blackman on behalf of all attorneys of record who are associated with customer No. 28765. All attorneys/agents associated with the Customer Number 28765 have been withdrawn. Applicant is reminded that there is no attorney of record at this time.

All future correspondence will be directed to the inventor Michele Mosher at the address indicated below. There is an outstanding Office action mailed February 01, 2010 that requires a reply from the applicant.

Telephone inquiries concerning this decision should be directed to Tredelle Jackson at 571-272-2783.

/Tredelle D. Jackson/
Paralegal Specialist
Office of Petitions

cc: **MICHELE L. MOSHER**
C/O DESIGNER GENE DIETS, INC.
1215 W. BOSTON POST ROAD
SUITE 290
MAMARONECK NY 10543-3333

UNITED STATES PATENT AND TRADEMARK OFFICE

UNITED STATES DEPARTMENT OF COMMERCE
United States Patent and Trademark Office
Address: COMMISSIONER FOR PATENTS
P.O. Box 1450
Alexandria, Virginia 22313-1450
www.uspto.gov

Tyco Healthcare Group LP
60 MIDDLETOWN AVENUE
NORTH HAVEN, CT 06473

Mail Date: 04/21/2010

Applicant	: Robert C. Smith	: DECISION ON REQUEST FOR
Patent Number	: 7632250	: RECALCULATION of PATENT
Issue Date	: 12/15/2009	: TERM ADJUSTMENT IN VIEW
Appliction No	: 11/069,098	: OF WYETH AND NOTICE OF INTENT TO
Filed	: 03/01/2005	: ISSUE CERTIFICATE OF CORRECTION
		:

The Request for Recalculation is **GRANTED** to the extent indicated.

The patent term adjustment has been determined to be **1324** days. The USPTO will *sua sponte* issue a certificate of correction reflecting the amount of PTA days determined by the recalculation.

Prior to the issuance of the certificate of correction, the USPTO will afford patentee an opportunity to be heard and request reconsideration. Accordingly, patentee has **one month or thirty (30) days**, whichever is longer, to file a request for reconsideration of this patent term adjustment calculation. See 35 U.S.C. 154(b)(3)(B)(ii) and 37 CFR 1.322(a)(4). No extensions of time will be granted under 37 CFR 1.136.

Patentee should use document code PET.OP if electronically filing a request for reconsideration of this patent term adjustment calculation. The patentee must also include the information required by 37 CFR 1.705(b)(2) and the fee required by 37 CFR 1.18(e). If patentee does not file a timely request for reconsideration of this patent term adjustment calculation including the information required by 37 CFR 1.705(b)(2) and the fee required by 37 CFR 1.18(e), the USPTO will issue a certificate of correction reflecting the PTA determination noted above.

Patentee should be aware that in order to preserve the right to review in the United States District Court for the District of Columbia of the USPTO patent term adjustment determination, patentee must ensure that he or she also take the steps required under 35 U.S.C. 154(b)(4)(A) in a timely manner. Nothing in the request for recalculation should be construed as providing an alternative time frame for commencing a civil action under 35 U.S.C. 154(b)(4)(A).

Any questions concerning this decision should be directed to the Office of Patent Legal Administration at 571-272-7702.

UNITED STATES PATENT AND TRADEMARK OFFICE

Commissioner for Patents
United States Patent and Trademark Office
P.O. Box 1450
Alexandria, VA 22313-1450
www.uspto.gov

Don W. Bulson, Esq.
Renner, Otto, Boisselle & Sklar, LLP
19th Floor
1621 Euclid Ave.
Cleveland OH 44115

COPY MAILED

JUL 29 2009

OFFICE OF PETITIONS

In re Application of	:	
Stephan Erbel et al.	:	
Application No. 11/069,101	:	ON PETITION
Filed: March 1, 2005	:	
Attorney Docket No. SCHWP0148USA	:	

This is a decision on the petition under the unintentional provisions of 37 CFR 1.137(b), filed May 29, 2009, to revive the above-identified application.

The petition is **GRANTED**.

The application became abandoned for failure to timely file a reply within the meaning of 37 CFR 1.113 to the final Office action of June 2, 2008. The proposed reply required for consideration of a petition to revive must be a Notice of Appeal (and appeal fee required by 37 CFR 41.20(b)(2), an amendment that *prima facie* places the application in condition for allowance, a Request for Continued Examination and submission (37 CFR 1.114), or the filing of a continuing application under 37 CFR 1.53(b). See MPEP 711.03(c)(III)(A)(2). A one (1) month extension of time pursuant to the provisions of 37 CFR 1.136(a) was obtained. Accordingly, the date of abandonment of this application is October 3, 2008.

The petition satisfies the requirements of 37 CFR 1.137(b) in that petitioner has supplied (1) the reply in the form of a Request for Continued Examination (RCE) and fee of $810, and the submission required by 37 CFR 1.114; (2) the petition fee of $1620; and (3) a proper statement of unintentional delay.

Telephone inquiries concerning this decision should be directed to the JoAnne Burke at (571)272-4584.

This application is being referred to Technology Center AU 3768 for processing of the RCE and for appropriate action by the Examiner in the normal course of business on the amendment submitted in accordance with 37 CFR 1.114.

Ramesh Krishnamurthy

Ramesh Krishnamurthy
Petitions Examiner
Office of Petitions

UNITED STATES PATENT AND TRADEMARK OFFICE

Commissioner for Patents
United States Patent and Trademark Office
P.O. Box 1450
Alexandria, VA 22313-1450
www.uspto.gov

NOVO NORDISK INC
PATENT DEPARTMENT
100 COLLEGE RD WEST
PRINCETON NJ 08540

COPY MAILED

AUG 2 2 2005

OFFICE OF PETITIONS

In re Application of	:	
Rasmus Rojkjaer	:	
Application No. 11/069,128	:	DECISION GRANTING PETITION
Filed: March 1, 2005	:	
Attorney Docket No. 6334.210-US	:	

This is a decision on the "PETITION TO ACCORD FILING DATE AND RESPONSE TO NOTICE OF INCOMPLETE NONPROVISIONAL APPLICATION", filed June 21, 2005, to accord the above-identified application a filing date of March 1, 2005.

The application was deposited on March 1, 2005. However, on May 12, 2005, the Office of Initial Patent Examination mailed a "Notice of Incomplete Nonprovisional Application", stating that the application had not been accorded a filing date because the application was deposited without drawings. In addition the Notice informed applicant that he had to submit a sequence listing in compliance with 37 CFR 1.821-1.825.

As stated in MPEP § 601.01(f), it is the practice of the PTO to treat an application that contains at least one process or method claim as an application for which a drawing is <u>not</u> necessary for an understanding of the invention under 35 U.S.C. 113 (first sentence).

MPEP § 601.01(f) also states that:

> A nonprovisional application having at least one claim, or a provisional application having at least some disclosure, directed to the subject matter discussed above for which a drawing is usually not considered essential for a filing date, describing drawing figure(s) in the specification, but filed without drawings will be treated as an application filed without all of the drawing figures referred to in the specification as discussed in MPEP § 601.01(g), so long as the application contains something that can be construed as a written description.

This instant application contains method claims.

Therefore, the application should have been treated as an application filed without all of the drawing figures referred to in the specification as discussed in MPEP § 601.01(g).

In view of the above, the petition to accord a filing date of March 1, 2005 is **GRANTED**.

The "Notice of Incomplete Nonprovisional Application", mailed May 12, 2005, was mailed in error and is hereby **VACATED**.

In view of the incorporation by reference of the parent application, the drawings of Figures 1- 4 are not new matter if they were a part of the disclosure of prior application no. 10/200,473.

Given the basis for granting this petition, no petition fee was required, and none has been charged.

The application is being forwarded to the Office of Initial Patent Examination (OIPE) for further processing with a filing date of March 1, 2005, using the application papers received in the Office on that date. Thereafter the application will be forwarded to Group Art Unit 1646 for consideration of applicant's arguments that no sequence listing is required.

Telephone inquiries specific to this decision may be directed to the undersigned at (571)272-3207.

Cliff Congo
Petitions Attorney
Office of Petitions

UNITED STATES PATENT AND TRADEMARK OFFICE

Commissioner for Patents
United States Patent and Trademark Office
P.O. Box 1450
Alexandria, VA 22313-1450
www.uspto.gov

DUANE MORRIS LLP - Philadelphia
IP DEPARTMENT
30 SOUTH 17TH STREET
PHILADELPHIA, PA 19103-4196

MAILED

APR 13 2009

OFFICE OF PETITIONS

In re Application of	:	
Shiau-Ling DAI, et al.	:	
Application No. 11/069,131	:	DECISION GRANTING PETITION
Filed: March 1, 2005	:	UNDER 37 CFR 1.313(c)(2)
Attorney Docket No. **2002.1351/1085.90051**	:	

This is a decision on the petition under 37 CFR 1.313(c)(2), filed April 13, 2009, to withdraw the above-identified application from issue after payment of the issue fee.

The petition is **GRANTED**.

The above-identified application is withdrawn from issue for consideration of a submission under 37 CFR 1.114 (request for continued examination). *See* 37 CFR 1.313(c)(2).

Petitioner is advised that the issue fee paid on February 27, 2009 cannot be refunded. If, however, this application is again allowed, petitioner may request that it be applied towards the issue fee required by the new Notice of Allowance.[1]

The file does not indicate a change of address has been submitted, although the address given on the petition differs from the address of record. If appropriate, a change of address should be filed in accordance with MPEP 601.03. A courtesy copy of this decision is being mailed to the address given on the petition; however, the office will mail all future correspondence solely to the address of record.

Telephone inquiries should be directed to the undersigned at (571) 272-7253.

This application is being referred to Technology Center AU 1792 for processing of the request for continued examination under 37 CFR 1.114 and for consideration of the concurrently filed information disclosure statement.

/Monica A. Graves/
Petitions Examiner, Office of Petitions

cc: **DUANE MORRIS, LLP**
ONE LIBERTY PLACE
PHILADELPHIA, PA 19103-7396

---

[1] *The request to apply the issue fee to the new Notice may be satisfied by completing and returning the new Part B – Fee(s) Transmittal Form (along with any balance due at the time of submission). Petitioner is advised that the Issue Fee Transmittal Form must be completed and timely submitted to avoid abandonment of the application.*

UNITED STATES PATENT AND TRADEMARK OFFICE

UNITED STATES DEPARTMENT OF COMMERCE
United States Patent and Trademark Office
Address: COMMISSIONER FOR PATENTS
P.O. Box 1450
Alexandria, Virginia 22313-1450
www.uspto.gov

McDermott Will & Emery
600 13th Street, NW
Washington, DC 20005-3096

Mail Date: 06/09/2010

Applicant	: Sean A. McCarthy	: DECISION ON REQUEST FOR
Patent Number	: 7645451	: RECALCULATION of PATENT
Issue Date	: 01/12/2010	: TERM ADJUSTMENT IN VIEW
Application No	: 11/069,137	: OF WYETH AND NOTICE OF INTENT TO
Filed	: 02/28/2005	: ISSUE CERTIFICATE OF CORRECTION
		:

The Request for Recalculation is **GRANTED** to the extent indicated.

The patent term adjustment has been determined to be **917** days. The USPTO will *sua sponte* issue a certificate of correction reflecting the amount of PTA days determined by the recalculation.

Prior to the issuance of the certificate of correction, the USPTO will afford patentee an opportunity to be heard and request reconsideration. Accordingly, patentee has **one month or thirty (30) days**, whichever is longer, to file a request for reconsideration of this patent term adjustment calculation. See 35 U.S.C. 154(b)(3)(B)(ii) and 37 CFR 1.322(a)(4). No extensions of time will be granted under 37 CFR 1.136.

Patentee should use document code PET.OP if electronically filing a request for reconsideration of this patent term adjustment calculation. The patentee must also include the information required by 37 CFR 1.705(b)(2) and the fee required by 37 CFR 1.18(e). If patentee does not file a timely request for reconsideration of this patent term adjustment calculation including the information required by 37 CFR 1.705(b)(2) and the fee required by 37 CFR 1.18(e), the USPTO will issue a certificate of correction reflecting the PTA determination noted above.

Patentee should be aware that in order to preserve the right to review in the United States District Court for the District of Columbia of the USPTO patent term adjustment determination, patentee must ensure that he or she also take the steps required under 35 U.S.C. 154(b)(4)(A) in a timely manner. Nothing in the request for recalculation should be construed as providing an alternative time frame for commencing a civil action under 35 U.S.C. 154(b)(4)(A).

Any questions concerning this decision should be directed to the Office of Patent Legal Administration at 571-272-7702.

UNITED STATES PATENT AND TRADEMARK OFFICE

Commissioner for Patents
United States Patent and Trademark Office
P.O. Box 1450
Alexandria, VA 22313-1450
www.uspto.gov

MAILED

JUN 28 2010

OFFICE OF PETITIONS

FOLEY & LARDNER LLP
150 EAST GILMAN STREET
P.O. BOX 1497
MADISON WI 53701-1497

In re Application of :
Janik, et al. :
Application No. 11/069,138 : ON APPLICATION FOR
Filed: February 28, 2005 : PATENT TERM ADJUSTMENT
Atty Docket No. 088245-8243

This is in response to the "REQUEST FOR RECONSIDERATION OF PATENT TERM ADJUSTMENT UNDER 37 C.F.R. § 1.705", filed April 1, 2010. The request is properly treated under 37 CFR 1.705(b). Applicants submit that the patent term adjustment to be indicated on the patent is seven hundred and ninety-two (792) days, not three hundred and ten (310) days as calculated by the Office as of the mailing of the initial determination of patent term adjustment. Applicants request this correction solely on the basis that the Office will take in excess of three years to issue this patent.

As the instant application for patent term adjustment requests reconsideration of the patent term adjustment as it relates to the Office's failure to issue the patent within 3 years of the filing date, the application for patent term adjustment under 37 CFR 1.705(b) is **DISMISSED as PREMATURE**.

Knowledge of the actual date the patent issues is required to calculate the amount, if any, of additional patent term patentee is entitled to for Office failure to issue the patent within 3 years. See § 1.702(b). (This is true even where a request for continued examination (RCE) was filed). The computer will not undertake the § 1.702(b) calculation until the actual date of issuance of the patent has been determined. Likewise, the computer will not calculate any further Office delay under § 1.702(a)(4) or applicant delay under § 1.704(c)(10) until the actual date of issuance of the patent has been determined. As such, the Office can not make a determination on the correctness of the patent term adjustment until the patent has issued.

Requesting reconsideration of the patent term adjustment to be indicated on the patent under 37 CFR 1.705(b) based on the initial determination of patent term adjustment and a projected issuance date of the patent (or even the filing date of the request for continued examination) is premature. Accordingly, it is appropriate to dismiss as premature such a request.

Rather than file an application for patent term adjustment under 37 CFR 1.705(b) contesting the 37 CFR 1.702(b) calculation at the time of the mailing of the notice of allowance, applicant is advised that they may wait until the time of the issuance of the patent and file a request for reconsideration of the patent term adjustment pursuant to 37 CFR 1.705(d). As the USPTO does not calculate the amount of time earned pursuant to 37 CFR 1.702(b) until the time of the issuance of the patent, the Office will consider any request for reconsideration of the patent term adjustment due to an error in the calculation of 37 CFR 1.702(b) to be timely if the request for reconsideration is filed within two months of the issuance of the patent. However, as to all other bases for contesting the initial determination of patent term adjustment received with the notice of allowance, applicant must timely file an application for patent term adjustment prior to the payment of the issue fee[1].

It is noted that any period of adjustment will be entered in light of 35 U.S.C. 154(B) GUARANTEE OF NO MORE THAN 3-YEAR APPLICATION PENDENCY, which provides that:

> Subject to the limitations under paragraph (2), if the issue of an original patent is delayed due to the failure of the United States Patent and Trademark Office to issue a patent within 3 years after the actual filing date of the application in the United States, not including –

---

[1] For example, if applicant disputes both the calculation of patent term adjustment under 37 CFR 1.702(a)(1) for Office failure to mail a first Office action or notice of allowance not later than fourteen months after the date on which the application was filed and under 37 CFR 1.702(b) for Office failure to issue a patent within three years of the actual filing date of the application, then applicant must still timely file an application for patent term adjustment prior to the payment of the issue fee to contest the calculation of Office delay in issuing a first Office action or notice of allowance. See 37 CFR 1.705(b) and 35 U.S.C. 154(b)(3)(B). A dispute as to the calculation of the §1.702(a)(1) period raised on request for reconsideration of patent term adjustment under 37 CFR 1.705(d) will be dismissed as untimely filed.

(i) any time consumed by continued examination of the application requested by the applicant under section 132(b);

It is further noted that a Request for Continued Examination (RCE) was filed in this application on June 24, 2009.

The Office is in receipt of the $200.00 for the fee set forth in 37 CFR 1.18(e) for consideration of the application for patent term adjustment under 37 CFR 1.705(b).

Any request for reconsideration of the patent term adjustment indicated on the patent must be timely filed within 2 months after issuance pursuant to 37 CFR 1.705(d) and must include payment of the required fee under 37 CFR 1.18(e).

The Office of Data Management has been advised of this decision. This application is being referred to the Office of Data Management for issuance of the patent.

Telephone inquiries specific to this decision should be directed to the undersigned (571) 272-3222.

/Kenya A. McLaughlin/

Kenya A. McLaughlin
Senior Petitions Attorney
Office of Petitions

UNITED STATES PATENT AND TRADEMARK OFFICE

UNITED STATES DEPARTMENT OF COMMERCE
United States Patent and Trademark Office
Address: COMMISSIONER FOR PATENTS
P.O. Box 1450
Alexandria, Virginia 22313-1450
www.uspto.gov

MINTZ, LEVIN, COHN, FERRIS, GLOVSKY & POPEO, P.C.
ONE FINANCIAL CENTER
BOSTON, MA 02111

Mail Date: 04/21/2010

Applicant	: Lorenz E. Wiest	: DECISION ON REQUEST FOR
Patent Number	: 7613688	: RECALCULATION of PATENT
Issue Date	: 11/03/2009	: TERM ADJUSTMENT IN VIEW
Appliction No	: 11/069,143	: OF WYETH AND NOTICE OF INTENT TO
Filed	: 02/28/2005	: ISSUE CERTIFICATE OF CORRECTION
		:

The Request for Recalculation is **GRANTED** to the extent indicated.

The patent term adjustment has been determined to be **586** days. The USPTO will *sua sponte* issue a certificate of correction reflecting the amount of PTA days determined by the recalculation.

Prior to the issuance of the certificate of correction, the USPTO will afford patentee an opportunity to be heard and request reconsideration. Accordingly, patentee has **one month or thirty (30) days**, whichever is longer, to file a request for reconsideration of this patent term adjustment calculation. See 35 U.S.C. 154(b)(3)(B)(ii) and 37 CFR 1.322(a)(4). No extensions of time will be granted under 37 CFR 1.136.

Patentee should use document code PET.OP if electronically filing a request for reconsideration of this patent term adjustment calculation. The patentee must also include the information required by 37 CFR 1.705(b)(2) and the fee required by 37 CFR 1.18(e). If patentee does not file a timely request for reconsideration of this patent term adjustment calculation including the information required by 37 CFR 1.705(b)(2) and the fee required by 37 CFR 1.18(e), the USPTO will issue a certificate of correction reflecting the PTA determination noted above.

Patentee should be aware that in order to preserve the right to review in the United States District Court for the District of Columbia of the USPTO patent term adjustment determination, patentee must ensure that he or she also take the steps required under 35 U.S.C. 154(b)(4)(A) in a timely manner. Nothing in the request for recalculation should be construed as providing an alternative time frame for commencing a civil action under 35 U.S.C. 154(b)(4)(A).

Any questions concerning this decision should be directed to the Office of Patent Legal Administration at 571-272-7702.

UNITED STATES PATENT AND TRADEMARK OFFICE

UNITED STATES DEPARTMENT OF COMMERCE
United States Patent and Trademark Office
Address: COMMISSIONER FOR PATENTS
P.O. Box 1450
Alexandria, Virginia 22313-1450
www.uspto.gov

SCHWEGMAN, LUNDBERG & WOESSNER, P.A.
P.O. BOX 2938
MINNEAPOLIS, MN 55402

Mail Date: 04/23/2010

Applicant	: Georgios Palaskas	: DECISION ON REQUEST FOR
Patent Number	: 7609792	: RECALCULATION of PATENT
Issue Date	: 10/27/2009	: TERM ADJUSTMENT IN VIEW
Application No	: 11/069,172	: OF WYETH AND NOTICE OF INTENT TO
Filed	: 03/01/2005	: ISSUE CERTIFICATE OF CORRECTION
		:

The Request for Recalculation is **GRANTED** to the extent indicated.

The patent term adjustment has been determined to be **1117** days. The USPTO will *sua sponte* issue a certificate of correction reflecting the amount of PTA days determined by the recalculation.

Prior to the issuance of the certificate of correction, the USPTO will afford patentee an opportunity to be heard and request reconsideration. Accordingly, patentee has **one month or thirty (30) days**, whichever is longer, to file a request for reconsideration of this patent term adjustment calculation. See 35 U.S.C. 154(b)(3)(B)(ii) and 37 CFR 1.322(a)(4). No extensions of time will be granted under 37 CFR 1.136.

Patentee should use document code PET.OP if electronically filing a request for reconsideration of this patent term adjustment calculation. The patentee must also include the information required by 37 CFR 1.705(b)(2) and the fee required by 37 CFR 1.18(e). If patentee does not file a timely request for reconsideration of this patent term adjustment calculation including the information required by 37 CFR 1.705(b)(2) and the fee required by 37 CFR 1.18(e), the USPTO will issue a certificate of correction reflecting the PTA determination noted above.

Patentee should be aware that in order to preserve the right to review in the United States District Court for the District of Columbia of the USPTO patent term adjustment determination, patentee must ensure that he or she also take the steps required under 35 U.S.C. 154(b)(4)(A) in a timely manner. Nothing in the request for recalculation should be construed as providing an alternative time frame for commencing a civil action under 35 U.S.C. 154(b)(4)(A).

Any questions concerning this decision should be directed to the Office of Patent Legal Administration at 571-272-7702.

UNITED STATES PATENT AND TRADEMARK OFFICE

Commissioner for Patents
United States Patent and Trademark Office
P.O. Box 1450
Alexandria, VA 22313-1450
www.uspto.gov

KELLEY DRYE & WARREN LLP
400 ALTLANTIC STREET , 13TH FLOOR
STAMFORD CT 06901

COPY MAILED

AUG 0 3 2009

OFFICE OF PETITIONS

In re Application of
COTE, William et al.
Application No. 11/069,203
Filed: February 28, 2005
Attorney Docket No. **NU-154(US)**

DECISION ON PETITION
TO WITHDRAW
FROM RECORD

This is a decision on the Request to Withdraw as attorney or agent of record under 37 C.F.R. § 1.36(b), filed June 18, 2009.

The request is **APPROVED**.

A grantable request to withdraw as attorney/agent of record must be signed by every attorney/agent seeking to withdraw or contain a clear indication that one attorney is signing on behalf of another/others. The Office requires the practitioner(s) requesting withdrawal to certify that he, she, or they have: (1) given reasonable notice to the client, prior to the expiration of the response period, that the practitioner(s) intends to withdraw from employment; (2) delivered to the client or a duly authorized representative of the client all papers and property (including funds) to which the client is entitled; and (3) notified the client of any responses that may be due and the time frame within which the client must respond, pursuant 37 CFR 10.40(c).

The request was signed by Marvin Wachs on behalf of all attorneys of record who are associated with customer No. 47670. All attorneys/agents associated with the Customer Number 47670 have been withdrawn. Applicant is reminded that there is no attorney of record at this time.

The request to change the correspondence address of record is not acceptable as the requested correspondence address is not that of: (1) the first named signing inventor; or (2) an intervening assignee of the entire interest under 37 C.F.R 3.71. All future communications from the Office will be directed to the first named signing inventor at the first copied address below until otherwise properly notified by the applicant.

There is an outstanding Office action mailed July 28, 2009 that requires a reply from the applicant.

Telephone inquiries concerning this decision should be directed to Tredelle Jackson at 571-272-2783.

Tredelle D. Jackson
Paralegal Specialist
Office of Petitions

cc: **WILLIAM F. COTE**
534 LOWELL ST.
CARLISLE MA 01741

cc: **WOLF GREENFIELD & SACKS, P.C.**
600 ATLANTIC AVENUE
BOSTON, MA 02210-2206

UNITED STATES PATENT AND TRADEMARK OFFICE

Commissioner for Patents
United States Patent and Trademark Office
P.O. Box 1450
Alexandria, VA 22313-1450
www.uspto.gov

Heller Ehrman, LLP
275 Middlefield Road
Menlo Park, CA 94025-3506

COPY MAILED

JUN 0 4 2009

OFFICE OF PETITIONS

In re Application of	:	
Thomas W. Furphy et al.	:	
Application No. 11/069,231	:	DECISION ON PETITION
Filed: February 28, 2005	:	TO WITHDRAW
Attorney Docket No. 40877-1016.US	:	FROM RECORD
	:	

This is a decision on the Request to Withdraw as attorney or agent of record under 37 C.F.R. § 1.36(b), filed July 24, 2006.

The request is **moot because a revocation of power of attorney has been filed**.

A review of the file record indicates that the power of attorney to James A. Fox and all attorneys/agents of record has been revoked by the assignee of the patent application on September 25, 2006. Accordingly, the request to withdraw under 37 C.F.R. § 1.36(b) is moot.

All future communications from the Office will continue to be directed to the below-listed address until otherwise notified by applicant.

Telephone inquires concerning this decision should be directed to Kimberly Inabinet at 571-272-4618.

Kimberly Inabinet
Petitions Examiner
Office of Petitions

cc: TOWNSEND AND TOWNSEND AND CREW LLP
TWO EMBARCADERO CENTER
8TH FLOOR
SAN FRANCISCO CA 94111-3834

UNITED STATES PATENT AND TRADEMARK OFFICE

Commissioner for Patents
United States Patent and Trademark Office
P.O. Box 1450
Alexandria, VA 22313-1450
www.uspto.gov

DOUGLAS W. SCHELLING
SYATT TARRANT & COMBS, LLP
SUITE 800
1715 AARON BRENNER DR.
MAMPHIS TN 38120-1445

COPY MAILED

JAN 26 2007

OFFICE OF PETITIONS

In re Application of
Edward J. Sommer et al
Application No. 11/069,243
Filed:March 1, 2005
Attorney Docket No. A398306.000012US

DECISION DISMISSING PETITION UNDER 37 CFR 3.81(b)

This is a decision on the petition, filed August 28, 2006, 37 CFR 3.81(b)[1] to correct the assignee data on the front page of the above-identified patent by way of a Certificate of Correction.

The request is **dismissed**.

Petitioner states that the correct assignee's address is **7 Alfred Circle, Bedford, Massachusetts 01730.**

37 CFR 3.81(b), effective June 25, 2004, reads:

> *After payment of the issue fee:* Any request for issuance of an application in the name of the assignee submitted after the date of payment of the issue fee, and any request for a patent to be corrected to state the name of the assignee, must state that the assignment was submitted for recordation as set forth in § 3.11 before issuance of the patent, and must include a request for a certificate of correction under § 1.323 of this chapter (accompanied by the fee set forth in § 1.20(a) and the processing fee set forth in § 1.17(i) of this chapter.

The instant request under 37 CFR 3.81(b) was not accompanied by a request for a certificate of correction (and fee) as required by 3.81(b). As petitioner has failed to comply with the provisions of 37 CFR 3.81(b), the request cannot be granted.

---

[1] *See* Official Gazette of June 22, 2004

A review of Office database assignment records reflects that an assignment with the desired address change has been recorded. Therefore, upon submission of the required certificate of correction and fee, it would be appropriate for the Office to issue a certificate of correction to correct the front page of the Letters Patent to reflect the desired assignee's address since the address was of record at the time of issuance of the instant application into a patent. *Note also* 35 U.S.C. § 152.

In view of the above, **the Certificates of Correction Branch is instructed to issue a certificate of correction <u>upon submission by petitioner of a request for a certificate of correction (and fee) which sets forth LINEX TECHNOLOGIES, INC., as the assignee</u>**. *No certificate of correction will be issued which sets forth an address other than the assignee's address set forth in the instant request. A copy of this decision* ***<u>must</u>*** *accompany the request for a Certificate of Correction.*

No further renewed request under 37 CFR 3.81(b) is necessary for consideration by the Office of Petitions for issuance of a certificate of correction of the assignee's address set forth in the instant request, as this decision operates as an instruction to the Certificates of Correction Branch to issue the requested certificate of correction.

Inquiries concerning this decision should be directed to the undersigned at (571) 272-3208. After the submission by petitioner of the request for a certificate of correction to correct the assignee data on the front page of the Letters Patent, any questions concerning the issuance of a certificate of correction should be directed to the Certificates of Correction Branch at (703) 305-8309.

Karen Creasy

Karen Creasy
Petitions Examiner
Office of Petitions

UNITED STATES PATENT AND TRADEMARK OFFICE

Commissioner for Patents
United States Patent and Trademark Office
P.O. Box 1450
Alexandria, VA 22313-1450
www.uspto.gov

FISH & RICHARDSON PC
P.O. BOX 1022
MINNEAPOLIS MN 55440-1022

MAILED

MAR 02 2010

OFFICE OF PETITIONS

In re Patent No. 7,607,020
Issued: October 20, 2009
Application No. 11/069,248
Filed: March 1, 2005
Attorney Docket No. 07844-0687001 / P637

: DECISION ON REQUEST
: FOR RECONSIDERATION
: OF PATENT TERM ADJUSTMENT
: AND
: NOTICE OF INTENT TO ISSUE
: CERTIFICATE OF CORRECTION

This is a decision on the APPLICATION FOR PATENT TERM ADJUSTMENT UNDER 37 C.F.R. § 1.705(d) filed on December 17, 2009, requesting that the patent term adjustment indicated on the above-identified patent be corrected from 688 days to 1119 days.

The petition to correct the patent term adjustment indicated on the above-identified patent to indicate that the term of the above-identified patent is extended or adjusted by one thousand eighteen (1118) days is **GRANTED to the extent indicated herein**.

As the period from the filing date of the request for continued examination (RCE) to the issue date of the patent is not included in the "B" delay period, the over three year period begins on March 2, 2008 and ends on May 25, 2009, the day before the RCE was filed, and the B delay considering the 20 days of overlap is 450 (not 451) days. See 35 U.S.C. 154(b)(1)(B)(i). Non-overlapping B delay is 430 days. As such, the patent term adjustment is 1118, not 1119 days.

The Office will *sua sponte* issue a certificate of correction. Pursuant to 37 CFR 1.322, the Office will not issue a certificate of correction without first providing assignee or patentee an opportunity to be heard. Accordingly, patentees are given **one (1) month or thirty (30) days**, whichever is longer, from the mail date of this decision to respond. No extensions of time will be granted under § 1.136.

The application is being forwarded to the Certificates of Branch for issuance of a certificate of correction. The Office will issue a certificate of correction indicating that the term of the above-identified patent is extended or adjusted by **one thousand eighteen (1118)** days.

Telephone inquiries specific to this decision should be directed to Senior Petitions Attorney Patricia Faison-Ball at (571) 272-3212.

/Kery A. Fries/

Kery A. Fries
Senior Legal Advisor
Office of Patent Legal Administration
Office of Deputy Commissioner
for Examination Policy

Enclosure: Copy of DRAFT Certificate of Correction

DRAFT

UNITED STATES PATENT AND TRADEMARK OFFICE

CERTIFICATE OF CORRECTION

PATENT : 7,607,020 B2

DATED : October 20, 2009

INVENTOR(S) : Mark Manca

It is certified that error appears in the above-identified patent and that said Letters Patent is hereby corrected as shown below:

On the cover page,

[*] Notice: Subject to any disclaimer, the term of this patent is extended or adjusted under 35 USC 154(b) by (688) days

Delete the phrase "by 688 days" and insert – by 1118 days--

UNITED STATES PATENT AND TRADEMARK OFFICE

Commissioner for Patents
United States Patent and Trademark Office
P.O. Box 1450
Alexandria, VA 22313-1450
www.uspto.gov

ADVANTEDGE LAW GROUP, LLC
3301 N. UNIVERSITY AVE
SUITE 200
PROVO UT 84604

COPY MAILED

OCT 01 2008

OFFICE OF PETITIONS

In re Application of	:	
Matthew I. Haller	:	
Application No. 11/069,251	:	DECISION ON PETITION
Filed: March 1, 2005	:	TO WITHDRAW
Attorney Docket No. 3013-0010 (05-01246-01)	:	FROM RECORD
	:	

This is a decision on the Request to Withdraw as attorney or agent of record under 37 C.F.R. § 1.36(b), filed February 15, 2008.

The request is **NOT APPROVED**.

A grantable request to withdraw as attorney/agent of record must be signed by every attorney/agent seeking to withdraw or contain a clear indication that one attorney is signing on behalf of another/others. A request to withdraw will not be approved unless at least 30 (thirty) days would remain between the date of approval and the later of the expiration date of a time to file a response or the expiration date of the maximum time period which can be extended under 37 C.F.R. § 1.136(a).

The request to withdraw less than all attorneys appointed by customer number 71418 cannot be approved. The addition and/or deletion of a practitioner from the list of practitioners associated with a Customer Number should be made by submitting a "Request for Customer Number Data Change" (PTO/SB/124) which will result in the addition or deletion of such practitioner from the list of persons authorized to represent any applicant or assignee of the entire interest who appointed all of the practitioners associated with such Customer Number. See MPEP 403 Section I. Customer Number Practice.

All future communications from the Office will continue to be directed to the above-listed address until otherwise notified by applicant.

Telephone inquiries concerning this decision should be directed to undersigned at 571-272-1642.

April M. Wise
Petitions Examiner
Office of Petitions

UNITED STATES PATENT AND TRADEMARK OFFICE

UNITED STATES DEPARTMENT OF COMMERCE
United States Patent and Trademark Office
Address: COMMISSIONER FOR PATENTS
P.O. Box 1450
Alexandria, Virginia 22313-1450
www.uspto.gov

M.H.K.K.G., P.C. / ADOBE SYSTEMS INCORPORATED
P.O. BOX 398
AUSTIN, TX 78767-0398

Mail Date: 04/20/2010

Applicant	: Jeffrey Young	: DECISION ON REQUEST FOR
Patent Number	: 7620886	: RECALCULATION of PATENT
Issue Date	: 11/17/2009	: TERM ADJUSTMENT IN VIEW
Appliction No	: 11/069,269	: OF WYETH AND NOTICE OF INTENT TO
Filed	: 03/01/2005	: ISSUE CERTIFICATE OF CORRECTION
		:

The Request for Recalculation is **GRANTED** to the extent indicated.

The patent term adjustment has been determined to be **980** days. The USPTO will *sua sponte* issue a certificate of correction reflecting the amount of PTA days determined by the recalculation.

Prior to the issuance of the certificate of correction, the USPTO will afford patentee an opportunity to be heard and request reconsideration. Accordingly, patentee has **one month or thirty (30) days**, whichever is longer, to file a request for reconsideration of this patent term adjustment calculation. See 35 U.S.C. 154(b)(3)(B)(ii) and 37 CFR 1.322(a)(4). No extensions of time will be granted under 37 CFR 1.136.

Patentee should use document code PET.OP if electronically filing a request for reconsideration of this patent term adjustment calculation. The patentee must also include the information required by 37 CFR 1.705(b)(2) and the fee required by 37 CFR 1.18(e). If patentee does not file a timely request for reconsideration of this patent term adjustment calculation including the information required by 37 CFR 1.705(b)(2) and the fee required by 37 CFR 1.18(e), the USPTO will issue a certificate of correction reflecting the PTA determination noted above.

Patentee should be aware that in order to preserve the right to review in the United States District Court for the District of Columbia of the USPTO patent term adjustment determination, patentee must ensure that he or she also take the steps required under 35 U.S.C. 154(b)(4)(A) in a timely manner. Nothing in the request for recalculation should be construed as providing an alternative time frame for commencing a civil action under 35 U.S.C. 154(b)(4)(A).

Any questions concerning this decision should be directed to the Office of Patent Legal Administration at 571-272-7702.

UNITED STATES PATENT AND TRADEMARK OFFICE

Commissioner for Patents
United States Patent and Trademark Office
P.O. Box 1450
Alexandria, VA 22313-1450
www.uspto.gov

WEST & ASSOCIATES, A PC
2815 MITCHELL DRIVE
SUITE 209
WALNUT CREEK, CA 94598

COPY MAILED

JUL 06 2007

OFFICE OF PETITIONS

In re Application of

Sharyn K. Amoroso :

Application No. 11/069,273

: DECISION ON PETITION

Filed: March 1, 2005

:

Attorney Docket No. AMORO-01001

This is a decision on the petition under 37 CFR 1.137(b), filed, February 5, 2007, to revive the above-identified application.

The petition is **GRANTED**.

The above-cited application became abandoned for failure to reply in a timely manner to the election/restriction requirement mailed May 2, 2006, which set a shortened period for reply of one (1) month from its mailing date. No extension of time pursuant to 37 CFR 1.136(a) was obtained within the allowable period. Accordingly, the application became abandoned on June 3, 2006. A Notice of Abandonment was mailed January 11, 2007.

The election filed February 5, 2007, is noted.

The application is being forwarded to Technology Center 3600, GAU 3677 for further processing.

Telephone inquiries concerning this decision should be directed to the undersigned at (571) 272-3222.

Kenya A. McLaughlin
Petitions Attorney
Office of Petitions

UNITED STATES PATENT AND TRADEMARK OFFICE

Commissioner for Patents
United States Patent and Trademark Office
P.O. Box 1450
Alexandria, VA 22313-1450
www.uspto.gov

O'KEEFE, EGAN & PETERMAN
1101 CAPITAL OF TEXAS HIGHWAY SOUTH
#C200
AUSTIN TX 78746

COPY MAILED

AUG 3 1 2006

OFFICE OF PETITIONS

In re Application of	:	
Nguyen, et al.	:	
Application No. 11/069,283	:	DECISION ON PETITION
Filed: March 1, 2005	:	TO WITHDRAW
Attorney Docket No. DELL-018	:	FROM RECORD
	:	

This is a decision on the Request to Withdraw as attorney or agent of record under 37 C.F.R. § 1.36(b), filed May 12, 2006.

The request is **APPROVED**.

A grantable request to withdraw as attorney/agent of record must be signed by every attorney/agent seeking to withdraw or contain a clear indication that one attorney is signing on behalf of another/others. A request to withdraw will not be approved unless at least 30 (thirty) days would remain between the date of approval and the later of the expiration date of a time to file a response or the expiration date of the maximum time period which can be extended under 37 C.F.R. § 1.136(a).

The request was signed by Maximilian Peterson, on behalf of himself.

All attorneys/agents associated with this application remain of record.

The correspondence address of record remains unchanged.

Telephone inquiries concerning this decision should be directed to April Wise at 571-272-1642.

April M. Wise
Petitions Examiner
Office of Petitions

UNITED STATES PATENT AND TRADEMARK OFFICE

Commissioner for Patents
United States Patent and Trademark Office
P.O. Box 1450
Alexandria, VA 22313-1450
www.uspto.gov

ARTHUR FREILICH
9045 CORBIN AVE, #260
NORTHRIDGE CA 91324-3343

COPY MAILED

AUG 2 1 2006

OFFICE OF PETITIONS

In re Application of

Edgardo HALILI
Application No. 11/069,296
Filed: February 28, 2005
Attorney Docket No. 203/513: MA-133

DECISION ON PETITION
TO WITHDRAW
FROM RECORD

This is a decision on the Request to Withdraw as attorney or agent of record under 37 C.F.R. § 1.36(b), filed May 2, 2006.

The request is **NOT APPROVED**.

A grantable request to withdraw as attorney/agent of record must be signed by every attorney/agent seeking to withdraw or contain a clear indication that one attorney is signing on behalf of another/others. A request to withdraw will not be approved unless at least 30 (thirty) days would remain between the date of approval and the later of the expiration date of a time to file a response or the expiration date of the maximum time period which can be extended under 37 C.F.R. § 1.136(a).

The Office cannot approve the request at this time since the reasons provided do not meet any of the conditions under the mandatory or permissive categories enumerated in 37 CFR 10.40. Section 10.40 of Title 37 of the Code of Federal Regulation states, "[a] practitioner shall not withdraw from employment in a proceeding before the Office without permission from the Office[.]" More specifically, 37 CFR 10.40 states, "[i]f paragraph (b) of this section is not applicable, a practitioner may not request permission to withdraw in matter pending before the Office unless such request or such withdrawal is" for one the permissive reasons listed in 37 CFR 10.40(c). The reasons set forth in the request, owner's instructions, does not meet any of the conditions set forth in 37 CFR 10.40 because the assignee has not intervened in accordance with 37 CFR 3.71 and no statement under 37 CFR 3.73(b) has been filed.

All future communications from the Office will continue to be directed to the above-listed address until otherwise notified by applicant.

Telephone inquiries concerning this decision should be directed to Monica A. Graves at 571-272-7253.

Amelia Au
Petitions Examiner
Office of Petitions

cc: Advanced Bionics Corporation
ATTN: BRYANT GOLD
25129 Rye Canyon Loop
Valencia, CA 91355

UNITED STATES PATENT AND TRADEMARK OFFICE

Commissioner for Patents
United States Patent and Trademark Office
P.O. Box 1450
Alexandria, VA 22313-1450
www.uspto.gov

Wm. Brook Lafferty
Scientific-Atlanta, Inc.
Intellectual Property Department
5030 Sugarloaf Parkway
Lawrenceville, GA 30044

COPY MAILED
JUL 0 7 2006
OFFICE OF PETITIONS

In re Application of:
Ramesh Nallur, et al.
Application No.: 11/069,297
Filed: March 1, 2005
Atty's Docket No.: A-9358 (191930-1370)

DECISION ON PETITION UNDER
37 CFR 1.137(a)

This decision is in response to applicant's petition for revival of the present international application pursuant to 37 CFR 1.137(a) filed January 3, 2006 in the United States Patent and Trademark Office (USPTO). For the reasons discussed below the petition is being treated as a petition under 37 CFR 1.181 to withdraw the holding of abandonment. No petition fee is required.

The above-identified application became abandoned for failure to respond in a timely manner to the "Notice to File Missing Parts of Nonprovisional Application" mailed March 28, 2005, which set a statutory period for reply of two (2) months. As detailed in the "Notice of Abandonment Under 37 CFR 1.53 (f) or (g)" mailed December 8, 2005, the above-identified application became abandoned at midnight on May 29, 2005.

On January 3, 2006, applicant filed the petition for revival under 37 CFR 1.137(b) considered herein arguing that the notice to file missing parts was never received. As such, the petition is being treated as a petition under 37 CFR 1.181 to withdraw the holding of abandonment and the $500.00 petition fee will be refunded to deposit account number 19-0761.

The Manual of Patent Examining Procedure (MPEP) at 711.03(c) and the Official Gazette, at 1156 OG 53, provides that a petition requesting relief based on the grounds that an Office action was not received must be accompanied by a statement that (1) the Office action was not received, (2) attests that a search of the file jacket indicates the Office action was not received, (3) attests that a search of counsel's docket records indicates the Office action was not received and (4) the Petition must also be accompanied by copies of the docket records where the non-received Office action would have been entered. (See also, Delgar v. Schulyer, 172 USPQ 513 (D.D.C. 1971). Applicant has satisfied item (1) above.

Applicant has not satisfied items (2)-(4). Therefore applicant's petition to withdraw the holding of abandonment is **DISMISSED**.

Any reconsideration on the merits of this petition must be filed within **TWO (2) MONTHS** from

the mail date of this decision. Any reconsideration request should include a cover letter entitled "Renewed Petition Under 37 CFR 1.181."

Further correspondence with respect to this matter should be addressed as follows:

By mail: Mail Stop PETITIONS
Commissioner for Patents
Post Office Box 1450
Alexandria, VA 22313-1450

By hand: Customer Service Window
Mail Stop Petitions
Randolph Building
401 Dulany Street
Alexandria, VA 22314

By fax: (703) 872-9306
ATTN: Office of Petitions

This application remains **ABANDONED**.

Telephone inquiries concerning this decision should be directed to the undersigned.

Derek A. Putonen
Attorney Advisor
(571) 272-3294

UNITED STATES PATENT AND TRADEMARK OFFICE

Commissioner for Patents
United States Patent and Trademark Office
P.O. Box 1450
Alexandria, VA 22313-1450
www.uspto.gov

Wm. Brook Lafferty
Scientific-Atlanta, Inc.
Intellectual Property Department
5030 Sugerloaf Parkway
Lawrenceville, GA 30044

COPY MAILED

NOV 27 2006

OFFICE OF PETITIONS

In re Application of	:	
Ramesh Nallur, et al.	:	
Application No.: 11/069,297	:	DECISION ON RENEWED
Filed: March 1, 2005	:	
Attorney Docket No.: A-9358 (191930-1370)	:	PETITION UNDER
For: SYSTEM AND METHOD FOR	:	
GENERATING TRICK MODE STREAMS	:	37 CFR 1.181

Applicant was mailed a decision on 07 July 2006 dismissing applicant's petition under 37 CFR 1.181 to withdraw the holding of abandonment. Applicant was afforded two months to file any request for reconsideration.

On 06 September 2006, applicant filed the present renewed petition.

As discussed in the decision mailed 07 July 2006, the Manual of Patent Examining Procedure (MPEP) at 711.03(c) and the Official Gazette, at 1156 OG 53, provides that a petition requesting relief based on the grounds that an Office action was not received must be accompanied by a statement that (1) the Office action was not received, (2) attests that a search of the file jacket indicates the Office action was not received, (3) attests that a search of counsel's docket records indicates the Office action was not received and (4) the Petition must also be accompanied by copies of the docket records where the non-received Office action would have been entered. (See also, Delgar v. Schulyer, 172 USPQ 513 (D.D.C. 1971). Applicant previously satisfied item (1) above.

With the filing of the present renewed petition and accompanying documentation applicant has satisfied items (2) and (3). As to item (4), it appears that applicant has only provided the docket record for the present application. It is necessary to submit the docket record for the entire firm for the particular time period in which an Office action mailed on March 28, 2005 would have been docketed. This is to ensure that the Office action in question was not in fact received and accidently docketed to another application. Therefore, it is not possible to grant applicant's renewed petition at this time and it is **DISMISSED**.

Any reconsideration on the merits of this petition must be filed within **TWO (2) MONTHS** from the mail date of this decision. Any reconsideration request should include a cover letter entitled "Renewed Petition Under 37 CFR 1.181."

Further correspondence with respect to this matter should be addressed as follows:

By mail: Mail Stop PETITIONS
Commissioner for Patents
Post Office Box 1450
Alexandria, VA 22313-1450

By hand: Customer Service Window
Mail Stop Petitions
Randolph Building
401 Dulany Street
Alexandria, VA 22314

By fax: (703) 872-9306
ATTN: Office of Petitions

This application remains **ABANDONED**.

Telephone inquiries concerning this decision should be directed to the undersigned.

Derek A. Putonen
Attorney Advisor
(571) 272-3294

UNITED STATES PATENT AND TRADEMARK OFFICE

Commissioner for Patents
United States Patent and Trademark Office
P.O. Box 1450
Alexandria, VA 22313-1450
www.uspto.gov

Wm. Brook Lafferty
Scientific-Atlanta, Inc.
Intellectual Property Department
5030 Sugerloaf Parkway
Lawrenceville, GA 30044

COPY MAILED

MAR 15 2007

OFFICE OF PETITIONS

In re Application of	:	
Ramesh Nallur, et al.	:	
Application No.: 11/069,297	:	DECISION ON RENEWED
Filed: March 1, 2005	:	
Attorney Docket No.: A-9358 (191930-1370)	:	PETITION UNDER
For: SYSTEM AND METHOD FOR	:	
GENERATING TRICK MODE STREAMS	:	37 CFR 1.181

This is a decision on the second renewed petition under 37 CFR 1.181, filed January 29, 2007. On 27 November 2006 applicant was mailed a decision dismissing applicant's renewed petition under 37 CFR 1.181 to withdraw the holding of abandonment. Applicant was afforded two months to file any request for reconsideration. As such, applicant's presently filed renewed petition is considered timely filed.

As detailed in the decision mailed 27 November 2006, the Manual of Patent Examining Procedure (MPEP) at 711.03(c) and the Official Gazette, at 1156 OG 53, provides that a petition requesting relief based on the grounds that an Office action was not received must be accompanied by a statement that (1) the Office action was not received, (2) attests that a search of the file jacket indicates the Office action was not received, (3) attests that a search of counsel's docket records indicates the Office action was not received and (4) the Petition must also be accompanied by copies of the docket records where the non-received Office action would have been entered. (See also, Delgar v. Schulyer, 172 USPQ 513 (D.D.C. 1971). Applicant previously satisfied item (1), (2) and (3).

With the filing of the present petition and accompanying exhibits applicant has satisfied the remaining item. Therefore, it is proper to **GRANT** applicant's petition to withdraw the holding of abandonment at this time.

This application file is being referred to Office of Initial Patent Examinationfor consideration of applicant's declaration filed January 3, 2006.

Telephone inquiries concerning this decision should be directed to the undersigned.

Derek A. Putonen
Attorney Advisor
(571) 272-3294

UNITED STATES PATENT AND TRADEMARK OFFICE

Commissioner for Patents
United States Patent and Trademark Office
P.O. Box 1450
Alexandria, VA 22313-1450
www.uspto.gov

Marlin Knight
PO Box 1320
Pioneer, CA 95666

COPY MAILED

JUL 2 6 2005

OFFICE OF PETITIONS

In re Application of :
Li :
Application No. 11/069,306 :
Filed: February 28, 2005 :
Attorney Docket No. HSJ920040181US2 :

Decision on Petition

This is a decision on the petition filed May 4, 2005, which is being treated as a petition under 37 CFR 1.53(e)(2), to establish that Figure 3 was part of the originally filed application.

The application was filed on February 28, 2005. On April 21, 2005, a Notice was mailed stating that Figure 3 described in the specification did not appear to be included as part of the application filed.

The present petition alleges that Figure 3 was deposited on February 28, 2005. In support, petitioner has submitted a postcard receipt which acknowledges receipt of 14 sheets of drawings on February 28, 2005.[1]

The USPTO file for this application includes only 13 sheets of drawings and does not include a drawing sheet containing Figure 3 described in the specification. Based on the evidence submitted, the Office concludes the missing drawing sheet containing Figure 3 was part of the application but was later misplaced. Therefore, the petition is **granted**.

No petition fee is required and none has been charged.

The Notice mailed April 21, 2005, was sent in error and is hereby vacated.

The Office of Initial Patent Examination will be informed of the instant decision and will further process the application with a filing date of February 28, 2005, using the application papers filed on February 28, 2005, and the copy of one drawing sheet containing Figure 3 filed on May 4, 2005.

Telephone inquiries should be directed to Petitions Attorney Steven Brantley at (571) 272-3203.

Charles Steven Brantley
Petitions Attorney
Office of Petitions

---

[1] Evidence of receipt of any correspondence filed in the Patent and Trademark Office can be obtained by submitting a self addressed post card properly itemizing and identifying the paper or papers being filed. Upon receipt of the correspondence, the Patent and Trademark Office will check the listing on the post card against the papers submitted, making sure that all items listed are present and will then stamp the postcard with an Official date stamp and place the post card in the outgoing mail. "A post card receipt which itemizes and properly identifies the papers which are being filed serves as *prima facie* evidence of receipt in the PTO of all items listed thereon by the PTO." M.P.E.P. § 503.

UNITED STATES PATENT AND TRADEMARK OFFICE

Commissioner for Patents
United States Patent and Trademark Office
P.O. Box 1450
Alexandria, VA 22313-1450
www.uspto.gov

COPY MAILED

JUN 0 4 2008

OFFICE OF PETITIONS

Ellen E. Stanley
1603 Raindrop Drive
Eagan MN 55121

In re Application of Stanley :
Application No. 11/069,311 : Decision on Petition
Filing Date: March 1, 2005 :
For: Trash Can With Through Bags :

This is a decision on the petition filed May 19, 2008, to accord the application a filing date of May 31, 2005, rather than March 1, 2005.

The petition is **dismissed**.

Any request for reconsideration must be submitted within TWO (2) MONTHS from the mail date of this decision. No further petition fee is required for the request. Extensions of time under 37 CFR 1.136(a) are NOT permitted. The reconsideration request should include a cover letter entitled "Renewed Petition under 37 CFR 1.182."

Facts:

The application was filed on March 1, 2005.

On March 30, 2005, the Office mailed a Notice to File Corrected Application Papers. The Notice required the submission of:

(1) A substitute specification with proper line spacing, and
(2) Replacement drawings.

A substitute specification and replacement drawings were filed May 31, 2005. The transmittal sheet stated, "No new matter has been introduced."

The papers filed May 31, 2005, did not request any change to the application's filing date.

The Office mailed a non-final Office action on March 18, 2008. The non-final Office action concludes the drawings, specification, and claims filed May 31, 2005, contained new matter and the Office action rejects all the claims.

Petitioner seeks to overcome the non-final Office action by requesting the Office change the filing date for the application from March 1, 2005, to May 31, 2005.

Discussion:

A request for a later filing date is a situation not specifically addressed by any of federal regulations. Therefore, such a request must be made by filing a petition under 37 CFR 1.182. A petition under 37 CFR 1.182 must be accompanied by a petition fee of $400. Petitioner has not submitted any petition fee. Therefore, the merits of the petition under 37 CFR 1.182 will not be considered.

The Office notes petitioner may wish to strongly consider filing a continuation-in-part application in order to address the rejection based on new matter.

Further correspondence with respect to this matter should be addressed as follows:

By mail: Mail Stop Petition
Commissioner for Patents
P.O. Box 1450
Alexandria, VA 22313-1450

By facsimile: (571) 273-8300
Attn: Office of Petitions

Telephone inquiries regarding this communication should be directed to Petitions Attorney Steven Brantley at (571) 272-3203.

Charles Steven Brantley
Senior Petitions Attorney
Office of Petitions

UNITED STATES PATENT AND TRADEMARK OFFICE

Commissioner for Patents
United States Patent and Trademark Office
P.O. Box 1450
Alexandria, VA 22313-1450
www.uspto.gov

AVAGO TECHNOLOGIES, LTD.
P.O. BOX 1920
DENVER CO 80201-1920

COPY MAILED
NOV 22 2006
OFFICE OF PETITIONS

In re Application of	:	
Yoganandan, et al.	:	ON PETITION
Application No.: 11/069,315	:	
Filed: February 28, 2005	:	
Attorney Docket No.: 70040345-1	:	

This is a decision on the petition under 37 CFR 1.47(a), filed September 26, 2006.

The petition is **DISMISSED**.

Any request for reconsideration of this decision must be submitted within TWO (2) MONTHS from the mail date of this decision. Extensions of time under 37 CFR 1.136(a) are permitted. Any response should be entitled "Request for Reconsideration of Petition Under 37 CFR 1.47(a)" and may include an oath or declaration executed by the inventor. **Failure to respond will result in abandonment of the application.**

A grantable petition under 37 CFR 1.47(a) requires:

(1) a petition including proof of the pertinent facts establishing that the joint inventor(s) refuses to join, or cannot be found or reached after diligent effort,
(2) a proper oath or Declaration executed by the available joint inventor(s),
(3) the petition fee of $200, and
(4) the last known address of the omitted inventor(s).

This petition lacks item (1) above.

As to item (1), applicants have failed to establish that the non-signing inventor, Fakhrul Arifin Mohd Afif, refused to join in the filing of the above-identified application. The petition states that a declaration and assignment was successfully mailed to the non-signing inventor.

The Office requires that the non-signing inventor be provided with a complete copy of the application as filed. This includes the specification with claims, drawings, if any, and a declaration. See MPEP 409.03(d).

Mr. Afif must have the complete application in his possession in order to make an informed decision as to whether he joins in its filing. When petitioners can show that Mr.Afif was successfully mailed or received the complete application and that he either refused to sign the declaration or would not respond to the request that he sign the declaration within a reasonable amount of time, petitioners will have satisfied this requirement.

Petitioners paid a $130.00 petition fee. The current Rule 47(a) petition fee is $200.00. Deposit account no. 50-3718 will be charged the $70.00 balance due.

Further correspondence with respect to this matter should be addressed as follows:

By mail: Mail Stop PETITION
Commissioner for Patents
Post Office Box 1450
Alexandria, VA 22313-1450

By hand: U.S. Patent and Trademark Office
Customer Service Window, Mail Stop Petition
Randolph Building
401 Dulany Street
Alexandria, VA 22314

By FAX: (571) 273-8300 - ATTN: Office of Petitions

Telephone inquiries should be directed to the undersigned at (571) 272-3230.

Shirene Willis Brantley
Shirene Willis Brantley
Senior Petitions Attorney
Office of Petitions

UNITED STATES PATENT AND TRADEMARK OFFICE

Commissioner for Patents
United States Patent and Trademark Office
P.O. Box 1450
Alexandria, VA 22313-1450
www.uspto.gov

AVAGO TECHNOLOGIES, LTD.
P.O. BOX 1920
DENVER CO 80201-1920

COPY MAILED

MAR 0 5 2007

OFFICE OF PETITIONS

In re Application of	:	
Yoganandan, et al.	:	ON PETITION
Application No.: 11/069,315	:	
Filed: February 28, 2005	:	
Attorney Docket No.: 70040345-1	:	

This is a decision on the reconsideration petition under 37 CFR 1.47(a), filed January 9, 2007.

The petition is **GRANTED**.

Petitioners have shown that the non-signing inventor, Fakhrul Arifin Mohd Afi, has constructively refused to join in the filing of the above-identified application. The reconsideration petition establishes that Mr. Afi was successfully mailed a copy of the application, declaration, and assignment, but did not return executed documents within a reasonable amount of time. Petitioners have submitted an acceptable declaration signed by the available joint inventors.

Regarding fees, only one petition fee is required. The second $200.00 petition fee submitted with the present petition will be credited to deposit account no. 50-3718.

The application and papers have been reviewed and found in compliance with 37 CFR 1.47(a). This application is hereby accorded Rule 1.47(a) status.

As provided in 37 CFR 1.47(c), this Office will forward notice of this application's filing to the non-signing inventor at the address given in the petition. Notice of the filing of this application will also be published in the Official Gazette.

After the mailing of this decision, the application will be returned to Publications Division for processing into a patent.

Telephone inquiries should be directed to the undersigned at (571) 272-3230.

Shirene Willis Brantley
Senior Petitions Attorney
Office of Petitions

UNITED STATES PATENT AND TRADEMARK OFFICE

Commissioner for Patents
United States Patent and Trademark Office
P.O. Box 1450
Alexandria, VA 22313-1450
www.uspto.gov

FAKHRUL ARIFIN MOHD AFIF
12,LRU. PAUH JAYA 4/9, TRAN PAUH JAYA PERMATANG PA.
PERMATANN PAUH 13700 PRAI,
PENANG. MALAYSIA

COPY MAILED

MAR 0 5 2007

OFFICE OF PETITIONS

In re Application of	:	
Yoganandan, et al.	:	LETTER
Application No.: 11/069,315	:	
Filed: February 28, 2005	:	
Attorney Docket No.: 70040345-1	:	

Dear Mr. Afif:

You are named as a joint inventor in the above identified United States patent application, filed under the provisions of 35 U.S.C. 116 (United States Code), and 37 CFR 1.47(a), Rules of Practice in Patent Cases. Should a patent be granted on the application you will be designated therein as a joint inventor.

As a named inventor you are entitled to inspect any paper in the file wrapper of the application, order copies of all or any part thereof (at a prepaid cost per 37 CFR 1.19) or make your position of record in the application. Alternatively, you may arrange to do any of the preceding through a registered patent attorney or agent presenting written authorization from you. If you care to join the application, counsel of record (see below) would presumably assist you. Joining in the application would entail the filing of an appropriate oath or declaration by you pursuant to 37 CFR 1.63.

Requests for information regarding your application should be directed to the File Information Unit at (703)308-2733. Information regarding how to pay for and order a copy of the application, or a specific paper in the application, should be directed to Certification Division at (703)308-9726 or 1(800)972-6382 (outside the Washington D.C. area).

Telephone inquiries regarding this communication should be directed to the undersigned at (571) 272-3230.

Shirene Willis Brantley
Senior Petitions Attorney
Office of Petitions

ATTORNEY OF RECORD: AVAGO TECHNOLOGIES, LTD.
P.O. BOX 1920
DENVER CO 80201-1920

UNITED STATES PATENT AND TRADEMARK OFFICE

Commissioner for Patents
United States Patent and Trademark Office
P.O. Box 1450
Alexandria, VA 22313-1450
www.uspto.gov

JUN 26 2007

DANA REWOLDT
GARST SEED COMPANY
2369 330TH STREET
PO BOX 500
SLATER IA 50244

In re Application of	:
Scott L. Tragesser	:
Serial No.: 11/069,334	: PETITION DECISION
Filed: February 28, 2005	:
Attorney Docket No.: G1505	:

This is in response to the petition under 37 CFR § 1.59(b), filed June 12, 2007, to expunge information from the above identified application. This application has been allowed.

Petitioner requests that the Reply to Request for Information Under 37 CFR 1.105, and all attachments thereto, submitted to the Patent Office on August 14, 2006, be expunged from the record. Petitioner states either: (A) that the information contains trade secret material, proprietary material and/or material that is subject to a protective order which has not been made public; or (B) that the information submitted was unintentionally submitted and the failure to obtain its return would cause irreparable harm to the party who submitted the information or to the party in interest on whose behalf the information was submitted, and the information has not otherwise been made public. The petition fee set forth in 37 CFR § 1.17(g) has been paid.

The reasons set forth in this petition establishes to the satisfaction of the Director that expungement of the information is appropriate. The file entries for those documents have been closed and as such the documents are no longer publicly available, which is the IFW equivalent to removal of a paper document from a paper file wrapper. Also, as stated in M.P.E.P. 724, upon allowance or other action closing prosecution in an application, petition may be made for return of Proprietary information. As this application has been allowed, the information is being returned to applicant.

Therefore, applicant's petition is GRANTED.

Should there be any questions about this decision please contact Marianne C. Seidel by letter addressed to Director, TC 1600, at the address listed above, or by telephone at 571-272-0584 or by facsimile sent to the general Office facsimile number, 703-872-9306.

Marianne C. Seidel
Quality Assurance Specialist/Program Examiner
Technology Center 1600

DATE 9/19/07 APPLICATION NUMBER 11/069,352

DOC CODE Ref. Doc. TC DOC DATE 9/19/07

DELIVER THE ATTACHED FIFLE/DOCUMENT TO THE TC SCANNING CENTER

CONTRACTOR: THE ATTACHED FILE/DOCUMENT MUST BE INDEXED AND SCANNED INTO IFW WITHIN **8** WORK HOURS; UPLOADING OF THE SCANNED IMAGES SHOULD OCCUR NO LATER THAN **16** WORK HOURS FOLLOWING RECEIPT OF THIS REQUEST

AFTER SCANNING, ORIGINAL DOCUMENTS SHOULD BE BOXED IN ACCORDANCE WITH INSTRUCTIONS

UNITED STATES PATENT AND TRADEMARK OFFICE

Commissioner for Patents
United States Patent and Trademark Office
P.O. Box 1450
Alexandria, VA 22313-1450
www.uspto.gov

GARDERE WYNNE SEWELL LLP
INTELLECTUAL PROPERTY SECTION
3000 THANKSGIVING TOWER
1601 ELM STREET
DALLAS, TX 75201-4761

COPY MAILED

SEP 19 2007

OFFICE OF PETITIONS

In re Application of	:	
Jess G. Ward	:	
Application No. 11/069,352	:	ON PETITION
Filed: March 1, 2005	:	
Attorney Docket No. 132228.001000	:	

This is a decision on the petition under the unintentional provisions of 37 CFR 1.137(b), filed May 23, 2007, to revive the above-identified application.

The petition is **GRANTED**.

The application became abandoned for failure to timely file a reply within the meaning of 37 CFR 1.113 to the final Office action of March 15, 2006. The proposed reply required for consideration of a petition to revive must be a Notice of Appeal (and appeal fee required by 37 CFR 41.20(b)(2), an amendment that *prima facie* places the application in condition for allowance, a Request for Continued Examination and submission (37 CFR 1.114), or the filing of a continuing application under 37 CFR 1.53(b). See MPEP 711.03(c)(III)(A)(2). No extensions of time pursuant to the provisions of 37 CFR 1.136(a) were obtained. Accordingly, the date of abandonment of this application is June 16, 2006.

The petition satisfies the requirements of 37 CFR 1.137(b) in that petitioner has supplied (1) the reply in the form of a Request for Continued Examination (RCE) and fee of $395 and the submission required by 37 CFR 1.114; (2) the petition fee of $750; and (3) a proper statement of unintentional delay.

Telephone inquiries concerning this decision should be directed to the undersigned at (571) 272-3210.

This application is being referred to Technology Center AU 3723 for processing of the RCE and for appropriate action by the Examiner in the normal course of business on the amendment submitted in accordance with 37 CFR 1.114.

Irvin Dingle
Petition Examiner
Office of Petitions

UNITED STATES PATENT AND TRADEMARK OFFICE

Commissioner for Patents
United States Patent and Trademark Office
P.O. Box 1450
Alexandria, VA 22313-1450
www.uspto.gov

Gardere Wynne Sewell LLP
Intellectual Property Section
3000 Thanksgiving Tower
1601 Elm Street
Dallas, TX 75201-4761

COPY MAILED

APR 14 2008

OFFICE OF PETITIONS

In re Application of	:	
Jess G. Ward	:	
Application No. 11/069,352	:	DECISION ON PETITION
Filed: March 1, 2005	:	TO WITHDRAW
Attorney Docket No. 132228.001000	:	FROM RECORD
	:	

This is a decision on the Request to Withdraw as attorney or agent of record under 37 C.F.R. § 1.36(b), filed October 26, 2007.

The request is **APPROVED**.

A grantable request to withdraw as attorney/agent of record must be signed by every attorney/agent seeking to withdraw or contain a clear indication that one attorney is signing on behalf of another/others. A request to withdraw will not be approved unless at least 30 (thirty) days would remain between the date of approval and the later of the expiration date of a time to file a response or the expiration date of the maximum time period which can be extended under 37 C.F.R. § 1.136(a).

The request was signed by Scott C. Sample on behalf of all attorneys of record. All attorneys/agents have been withdrawn. Applicant is reminded that there is no attorney of record at this time.

All future correspondence will be directed to the first named inventor Jess Ward at the address indicated below.

Telephone inquiries concerning this decision should be directed to Terri Williams at 571-272-2991.

T. Williams

Terri Williams
Petitions Examiner
Office of Petitions

cc: **Jess Ward**
201 Highway 74
Twin Falls, ID 83301

UNITED STATES PATENT AND TRADEMARK OFFICE

UNITED STATES DEPARTMENT OF COMMERCE
United States Patent and Trademark Office
Address: COMMISSIONER FOR PATENTS
P.O. Box 1450
Alexandria, Virginia 22313-1450
www.uspto.gov

APPLICATION NUMBER	FILING OR 371(C) DATE	FIRST NAMED APPLICANT	ATTY. DOCKET NO./TITLE
11/069,352	03/01/2005	Jess G. Ward	132228.001000

CONFIRMATION NO. 3007

POWER OF ATTORNEY NOTICE

32914
GARDERE WYNNE SEWELL LLP
INTELLECTUAL PROPERTY SECTION
3000 THANKSGIVING TOWER
1601 ELM ST
DALLAS, TX 75201-4761

OC000000029373619

Date Mailed: 04/11/2008

NOTICE REGARDING CHANGE OF POWER OF ATTORNEY

This is in response to the Power of Attorney filed 10/26/2007.

- The withdrawal as attorney in this application has been accepted. Future correspondence will be mailed to the new address of record. 37 CFR 1.33.

/tswilliams/

Office of Data Management, Application Assistance Unit (571) 272-4000, or (571) 272-4200, or 1-888-786-0101

UNITED STATES PATENT AND TRADEMARK OFFICE

Commissioner for Patents
United States Patent and Trademark Office
P.O. Box 1450
Alexandria, VA 22313-1450
www.uspto.gov

FISH & RICHARDSON PC
P.O. BOX 1022
MINNEAPOLIS, MN 55440-1022

COPY MAILED

MAY 3 1 2007

OFFICE OF PETITIONS

In re Application of	:	
WANG, Chang Ning J.	:	
Application No. 11/069,370	:	DECISION ON PETITION
Filed: February 28, 2005	:	TO WITHDRAW
Attorney Docket No. **06498-006001**	:	FROM RECORD
	:	

This is a decision on the Request to Withdraw as attorney or agent of record under 37 C.F.R. § 1.36(b), filed March 18, 2007.

The request is **NOT APPROVED** as moot.

A review of the file record indicates that the power of attorney to Fish & Richardson P.C. has been revoked by the applicant of the patent application on April 02, 2007. Accordingly, the request to withdraw under 37 C.F.R. § 1.36(b) is moot.

All future communications from the Office will continue to be directed to the below-listed address until otherwise notified by applicant.

Telephone inquires concerning this decision should be directed to Michelle R. Eason at 571-272-4231.

Terri Williams
Petitions Examiner
Office of Petitions

cc: **JIE TAN**
8 PINE PLAIN RD
GEORGETOWN MA 01833

SPE RESPONSE FOR CERTIFICATE OF CORRECTION

Paper No.: _____

DATE : 6/12/09

TO SPE OF : ART UNIT 2612

SUBJECT : Request for Certificate of Correction for Appl. No.: 11069389 Patent No.: 7397370 B2

Please respond to this request for a certificate of correction within 7 days.

FOR IFW FILES:

Please review the requested changes/corrections as shown in the **COCIN** document(s) in the IFW application image. No new matter should be introduced, nor should the scope or meaning of the claims be changed.

Please complete the response (see below) and forward the completed response to scanning using document code **COCX**.

FOR PAPER FILES:

Please review the requested changes/corrections as shown in the attached certificate of correction. Please complete this form (see below) and forward it with the file to:

Certificates of Correction Branch (CofC)
South Tower - 9A22
Palm Location 7580

You can fax the Directors/SPE response to 571-270-9990

LAMONTE NEWSOME
Certificates of Correction Branch
703-308-9390 ext. 112

Thank You For Your Assistance

The request for issuing the above-identified correction(s) is hereby:
Note your decision on the appropriate box.

X	**Approved**	**All** changes apply.
❑	**Approved in Part**	Specify below which changes **do not** apply.
❑	**Denied**	State the reasons for denial below.

Comments: _____

/Benjamin C. Lee/ **2612**

SPE **Art Unit**

SPE RESPONSE FOR CERTIFICATE OF CORRECTION

Paper No.: _____

DATE : 6/12/09

TO SPE OF : ART UNIT 2612

SUBJECT : Request for Certificate of Correction for Appl. No.: 11069389 Patent No.: 7397370 B2

Please respond to this request for a certificate of correction within 7 days.

FOR IFW FILES:

Please review the requested changes/corrections as shown in the **COCIN** document(s) in the IFW application image. No new matter should be introduced, nor should the scope or meaning of the claims be changed.

Please complete the response (see below) and forward the completed response to scanning using document code **COCX**.

FOR PAPER FILES:

Please review the requested changes/corrections as shown in the attached certificate of correction. Please complete this form (see below) and forward it with the file to:

Certificates of Correction Branch (CofC)
South Tower - 9A22
Palm Location 7580

You can fax the Directors/SPE response to 571-270-9990

LAMONTE NEWSOME
Certificates of Correction Branch
703-308-9390 ext. 112

Thank You For Your Assistance

The request for issuing the above-identified correction(s) is hereby:
Note your decision on the appropriate box.

XApproved	**All** changes apply.
❑ **Approved in Part**	Specify below which changes **do not** apply.
❑ **Denied**	State the reasons for denial below.

Comments: _____

DANIEL WU
SUPERVISORY PATENT EXAMINER 2612

SPE RESPONSE FOR CERTIFICATE OF CORRECTION

DANIEL WU
SUPERVISORY PATENT EXAMINER

SPE

2612
Art Unit

UNITED STATES PATENT AND TRADEMARK OFFICE

Commissioner for Patents
United States Patent and Trademark Office
P.O. Box 1450
Alexandria, VA 22313-1450
www.uspto.gov

BEYER LAW GROUP LLP/APPLE INC.
P.O. BOX 1687
CUPERTINO CA 95015-1687

MAILED

JUL 13 2009

OFFICE OF PETITIONS

In re Patent No. 7,505,583 :
Issued: March 17, 2009 : DECISION ON APPLICATION
Application No. 11/069,391 : FOR PATENT TERM ADJUSTMENT
Filed: February 28, 2005 :
Attorney Docket No. :
APL1P237D1/P2761D1 :

This is a decision on the "REQUEST FOR RECONSIDERATION OF PATENT TERM ADJUSTMENT INDICATED IN THE ISSUE NOTIFICATION" filed May 15, 2009, requesting that the patent term adjustment determination for the above-identified patent be changed from seven hundred fifteen (715) days to nine hundred ninety-eight (998) days.

The request for reconsideration of patent term adjustment is **DISMISSED**.

On March 17, 2009, the above-identified application matured into US Patent No. 7,505,583 with a patent term adjustment of 715 days. This request for reconsideration of patent term adjustment was timely filed within two months of the issue date of the patent. See 37 CFR 1.705(d).

The Office acknowledges submission of the $200.00 fee set forth in 37 CFR 1.18(e). No additional fees are required.

Patentees request recalculation of the patent term adjustment based on the decision in Wyeth v. Dudas, 580 F. Supp. 2d 138, 88 U.S.P.Q. 2d 1538 (D.D.C. 2008). Patentees assert that in view of the decision in Wyeth, they are entitled to a total patent term adjustment of 998 days, the sum of 283 days of patent term adjustment due to exceeding three year pendency and 715 days due to USPTO delay in prosecution.

The 383-day period is calculated based on the application having been filed under 35 U.S.C. 111(a) on February 28, 2005, and the patent having been issued on March 17, 2009, three years and 383 days later. Patentees assert that in addition to this 283-day period, they are entitled to a period of adjustment due to examination delay pursuant to 37 CFR 1.702(a), of 615 days for the failure by the Office to mail at least one of a notification under 35 U.S.C. 132 not later than fourteen months after the date on which the application was filed under 35 U.S.C. 111(a), pursuant to 37 CFR

1.702(a)(1). In addition, applicant is entitled to an additional 100 days pursuant to 37 CFR 1.702(a)(4).

Under 37 CFR 1.703(f), patentees are entitled to a period of patent term adjustment equal to the period of delays based on the grounds set forth in 37 CFR 1.702 reduced by the period of time equal to the period of time during which patentees failed to engage in reasonable efforts to conclude prosecution pursuant to 37 CFR 1.704. In other words, it is the period of Office delay reduced by the period of applicant delay. In this instance there is no dispute that there has been no reduction for applicant delay.

Patentees do not dispute that the total period of Office delay is the sum of the period of Three Years Delay (383 days) and the period of Examination Delay (715 days) to the extent that these periods of delay are not overlapping. However, in effect, patentees contend that no portion of the Three Year Delay period overlaps with the period of 14-month examination delay. However, patentees concede that the 100 days of adjustment under 37 CFR 1.702(a)(4) overlap with the 383 days under 1.702(b). Accordingly, patentees submit that the total period of adjustment for Office delay is 998 days, which is the sum of the period of Three Year Delay (383 days) and the period of Examination Delay (615 + 100 =715 days), reduced by the period of overlap (100 days). As such, patentees assert entitlement to a patent term adjustment of 998 days (183 + 715 reduced by100 overlap – 0 (applicant delay)).

The Office agrees that as of the issuance of the patent on March 17, 2009, the application was pending three years and 383 days after its filing date. The Office agrees that the action detailed above was not taken within the specified time frame, and thus, the entry of a period of adjustment of 715 days is correct. At issue is whether patentees should accrue 383 days of patent term adjustment for the Office taking in excess of three years to issue the patent, as well as 715 days for Office failure to take certain actions within a specified time frame (or examination delay).

The Office contends that 383 days overlap. Patentees' calculation of the period of overlap is inconsistent with the Office's interpretation of this provision. 35 U.S.C. 154(b)(2)(A) limits the adjustment of patent term, as follows:

> to the extent that the periods of delay attributable to grounds specified in paragraph (1) overlap, the period of any adjustment granted under this subsection shall not exceed the actual number of days the issuance of the patent was delayed.

Likewise, 35 CFR 1.703(f) provides that:

> To the extent that periods of delay attributable to the grounds specified in §

> 1.702 overlap, the period of adjustment granted under this section shall not exceed the actual number of days the issuance of the patent was delayed.

As explained in *Explanation of 37 CFR 1.703(f) and of the United States Patent and Trademark Office Interpretation of 35 U.S.C. 154(b)(2)(A)*, 69 Fed. Reg. 34283 (June 21, 2004), the Office interprets 35 U.S.C. 154(b)(2)(A) as permitting either patent term adjustment under 35 U.S.C. 154(b)(1)(A)(i)-(iv), or patent term adjustment under 35 U.S.C. 154(b)(1)(B), but not as permitting patent term adjustment under both 35 U.S.C. 154(b)(1)(A)(i)-(iv) and 154(b)(1)(B). Accordingly, the Office implements the overlap provision as follows:

> If an application is entitled to an adjustment under 35 U.S.C. 154(b)(1)(B), the entire period during which the application was pending (except for periods excluded under 35 U.S.C. 154(b)(1)(B)(i)-(iii)), and not just the period beginning three years after the actual filing date of the application, is the period of delay under 35 U.S.C. 154(b)(1)(B) in determining whether periods of delay overlap under 35 U.S.C. 154(b)(2)(A). Thus, any days of delay for Office issuance of the patent more than 3 years after the filing date of the application, which overlap with the days of patent term adjustment accorded prior to the issuance of the patent will not result in any additional patent term adjustment. See 35 U.S.C. 154(b)(1)(B), 35 U.S.C. 154(b)(2)(A), and 37 CFR § 1.703(f). See *Changes to Implement Patent Term Adjustment Under Twenty Year Term; Final Rule*, 65 Fed. Reg. 56366 (Sept. 18, 2000). See also *Revision of Patent Term Extension and Patent Term Adjustment Provisions; Final Rule*, 69 Fed. Reg. 21704 (April 22, 2004), 1282 Off. Gaz. Pat. Office 100 (May 18, 2004). See also *Explanation of 37 CFR 1.703(f) and of the United States Patent and Trademark Office Interpretation of 35 U.S.C. 154(b)(2)(A),* 69 Fed. Reg. 34283 (June 21, 2004).

The current wording of § 1.703(f) was revised in response to the misinterpretation of this provision by a number of Patentees. The rule was slightly revised to more closely track the corresponding language of 35 U.S.C. 154(b)(2)(A). The relevant portion differs only to the extent that the statute refers back to provisions of the statute whereas the rule refers back to sections of the rule. This was not a substantive change to the rule nor did it reflect a change of the Office's interpretation of 35 U.S.C. 154(b)(2)(A). As stated in the *Explanation of 37 CFR 1.703(f) and of the United States Patent and Trademark Office Interpretation of 35 U.S.C. 154(b)(2)(A)*, the Office has consistently taken the position that if an application is entitled to an adjustment under the three-year pendency provision of 35 U.S.C. 154(b)(1)(B), the entire period during which the application was pending before the Office (except for periods excluded under 35 U.S.C. 154(b)(1)(B)(i)-(iii)), and not just the period beginning three years after the actual filing date of the application, is the relevant period under 35 U.S.C. 154(b)(1)(B) in determining whether periods of delay "overlap" under 35 U.S.C. 154(b)(2)(A).

This interpretation is consistent with the statute. Taken together the statute and rule provide that to the extent that periods of delay attributable to grounds specified in 35 U.S.C. 154(b)(1) and in corresponding § 1.702 overlap, the period of adjustment granted shall not exceed the actual number of days the issuance of the patent was delayed. The grounds specified in these sections cover the A) guarantee of prompt Patent and Trademark Office responses, B) guarantee of no more than 3-year application pendency, and C) guarantee or adjustments for delays due to interference, secrecy orders and appeals. A section by section analysis of 35 U.S.C. 154(b)(2)(A) specifically provides that:

> Section 4402 imposes limitations on restoration of term. In general, pursuant to [35 U.S.C.] 154(b)(2)(A)-(C), total adjustments granted for restorations under [35 U.S.C. 154](b)(1) are reduced as follows: (1) To the extent that there are multiple grounds for extending the term of a patent that may exist simultaneously (e.g., delay due to a secrecy order under [35 U.S.C.] 181 and administrative delay under [35 U.S.C.] 154(b)(1)(A)), the term should not be extended for each ground of delay but only for the actual number of days that the issuance of a patent was delayed; See 145 Cong. Rec. S14,718[1]

As such, the period for over three-year pendency does not overlap only to the extent that the actual dates in the period beginning three years after the date on which the application was filed overlap with the actual dates in the periods for failure of the Office to take action within specified time frames. In other words, consideration of the overlap does not begin three years after the filing date of the application.

In this instance, the relevant period under 35 U.S.C. 154(b)(1)(B) in determining whether periods of delay "overlap" under 35 U.S.C. 154(b)(2)(A) is the entire period during which the application was pending before the Office, February 28, 2005, to the date the patent issued on March 17, 2009. Prior to the issuance of the patent, 715 days of patent term adjustment were accorded for the Office failing to respond within a specified time frame during the pendency of the application. All of the 383 days for Office delay in issuing the patent overlap with the 715 days of Office delay. During that time, the issuance of the patent was delayed by 715 days, not 715 + 383 days. The Office took 14 months and 615 days to issue a first Office action and 100 days to issue the patent after the payment of the issue fee. Otherwise, the Office took all actions set forth in 37 CFR 1.702(a) within the prescribed time frames. Nonetheless, given the initial 715 days of Office delay and the time allowed within the time frames for processing and examination, as of the date the patent issued, the application was

---

[1] The AIPA is title IV of the Intellectual Property and Communications Omnibus Reform Act of 1999 (S. 1948), which was incorporated and enacted as law as part of Pub. L. 106-113. The Conference Report for H.R. 3194, 106th Cong. 1st Sess. (1999), which resulted in Pub. L. 106-113, does not contain any discussion (other than the incorporated language) of S. 1948. A section-by-section analysis of S. 1948, however, was printed in the Congressional Record at the request of Senator Lott, See 145 Cong. Rec. S14,708-26 (1999)(daily ed. Nov. 17, 1999).

pending three years and 383 days. The Office did not delay 715 days and then an additional 383 days. Accordingly, 715 days of patent term adjustment (not 715 and 383 days) was properly entered since the period of delay of 383 days attributable to the delay in the issuance of the patent overlaps with the adjustment of 715 days attributable to grounds specified in § 1.702(a)(1). Entry of both periods is not warranted. Thus, 715 days is determined to be the actual number of days that the issuance of the patent was delayed, considering the 383 days over three years to the issuance of the patent.

Accordingly, at issuance, the Office properly entered no additional days of patent term adjustment for the Office taking in excess of three years to issue the patent.

In view thereof, no adjustment to the patent term will be made.

Telephone inquiries specific to this decision should be directed to Senior Petitions Attorney Patricia Faison-Ball at (571) 272-3212.

Kery A. Fries
Senior Legal Advisor
Office of Patent Legal Administration
Office of Deputy Commissioner
for Examination Policy

UNITED STATES PATENT AND TRADEMARK OFFICE

Commissioner for Patents
United States Patent and Trademark Office
P.O. Box 1450
Alexandria, VA 22313-1450
www.uspto.gov

COPY MAILED

AUG 1 0 2009

OFFICE OF PETITIONS

ROZENBLAT IP LLC
AND THE BOEING COMPANY
300 WEST ADAMS STREET
SUITE 505
CHICAGO IL 60606

In re Application of	:	
Chen, et al.	:	
Application No. 11/069,420	:	DECISION ON PETITION
Filed: February 28, 2005	:	
Attorney Docket No. BOE01-033-US	:	

This is a decision on the paper entitled "APPLICANT'S PROOF OF TIMELY FILING AMENDMENT AND INFORMATION DISCLOSURE STATEMENT ON MARCH 10, 2009 RESPONSIVE TO DECEMBER 15, 2008 NON-FINAL OFFICE ACTION AND REQUEST FOR ENTRY OF PREVIOUSLY FILED AMENDMENT AND INFORMATION DISCLOSURE STATEMENT AS HAVING BEEN TIMELY FILED ON MARCH 10, 2009", filed June 28, 2009, which is being treated as a petition to withdraw the holding of abandonment under 37 CFR 1.181.

The petition is **GRANTED**.

The above-identified application was held abandoned for failure to timely file a response to the non-final Office action mailed December 15, 2008. This Office action set a shortened statutory period for reply of three (3) months. As no reply was received, the application became abandoned on March 16, 2009. The mailing of this decision precedes the mailing of a Notice of Abandonment.

Petitioner argues that he timely filed a reply on March 10, 2009. In support thereof, petitioner has included a copy of an

Amendment and an Information Disclosure Statement, together with a transmittal letter bearing a Certificate of Transmission under 37 CFR 1.8, dated March 10, 2009.

In view thereof, **the holding of abandonment is withdrawn.**

The matter is being forwarded to Group Art Unit 3661 for consideration of the Amendment and IDS, filed on June 28, 2009 (Certificate of Transmission dated March 10, 2009).

Telephone inquiries regarding this decision should be directed to the undersigned at (571)272-3207.

Cliff Congo
Petitions Attorney
Office of Petitions

UNITED STATES PATENT AND TRADEMARK OFFICE

Commissioner for Patents
United States Patent and Trademark Office
P.O. Box 1450
Alexandria, VA 22313-1450
www.uspto

GARLICK HARRISON & MARKISON
P.O. BOX 160727
AUSTIN TX 78716-0727

COPY MAILED

JAN 15 2010

In re Application of	:	
Karaoguz et al.	:	
Application No. 11/069,445	:	DECISION ON PETITION
Filed: March 1, 2005	:	
Attorney Docket No. BP4112	:	

This is a decision on the petition under the unintentional provisions of 37 CFR 1.137(b), filed November 24, 2009, to revive the above-identified application.

The petition is **GRANTED**.

The application became abandoned for failure to reply in a timely manner to the final Office action mailed January 21, 2009, which set a shortened statutory period for reply of three (3) months. No extensions of time under the provisions of 37 CFR 1.136(a) were timely obtained. Accordingly, the application became abandoned on April 22, 2009. A Notice of Abandonment was mailed September 17, 2009.

The petition satisfies the requirements of 37 CFR 1.137(b) in that petitioner has supplied (1) the reply in the form of a continuation, (2) the petition fee of $1,620.00, and (3) an adequate statement of unintentional delay.

The above-identified application is being revived solely for purposes of continuity. As continuity has been established by this decision reviving the above-identified application, the above-identified application is again abandoned in favor of continuing application No. 12/505,302, filed July 17, 2009.

Additionally, an extension of time under 37 CFR 1.136 must be filed prior to the expiration of the maximum extendable period for reply. *See* In re Application of S., 8 USPQ2d 1630, 1631 (Comm'r Pats. 1988). Since the $1,110.00, three- month extension of time fee submitted with the petition on November 24, 2009 was subsequent to the maximum extendable period for reply, this fee is unnecessary and will be refunded to petitioner's credit card in due course.

Telephone inquiries concerning this decision should be directed to the undersigned at (571) 272-7751.

Joan Olszewski
Petitions Examiner
Office of Petitions

UNITED STATES PATENT AND TRADEMARK OFFICE

COMMISSIONER FOR PATENTS
UNITED STATES PATENT AND TRADEMARK OFFICE
P.O. BOX 1450
ALEXANDRIA, VA 22313-1450
WWW.USPTO.GOV

Paper No. None

NUTTER MCCLENNEN & FISH LLP
WORLD TRADE CENTER WEST
155 SEAPORT BOULEVARD
BOSTON MA 02210-2604

COPY MAILED

DEC 1 5 2005

OFFICE OF PETITIONS

In re Application of
Bharat Khuti, Clayton Coleman, David Rath, Ernest Rahaczky, Jim Leslie, Juan Peralta, and George Simpson
Application No. 11/069,465
Filed: March 1, 2005
Attorney Docket No. 102314-0166
Title: PROCESS CONTROL METHODS AND APPARATUS FOR INTRUSION DETECTION, PROTECTION AND NETWORK HARDENING

DECISION ON PETITION

This is in response to the petition under 37 C.F.R. §1.47(a)[1], filed November 17, 2005.

On March 1, 2005, the application was filed, identifying Bharat Khuti, Clayton Coleman, David Rath, Ernest Rahaczky, Jim Leslie, Juan Peralta, and George Simpson as joint inventors. The application was deposited without an oath or declaration. On April 15, 2005, a "Notice to File Missing Parts of Nonprovisional Application – Filing Date Granted" (Notice) was mailed,

[1]A grantable petition under 37 C.F.R. §1.47(a) requires:
(1) the petition fee of $400;
(2) a surcharge of either $65 or $130 if the petition is not filed at the time of filing the application, as set forth in 37 CFR § 1.16(e);
(3) a statement of the last known address of the non-signing inventors;
(4) either
a) proof that a copy of the entire application (specification, claims, drawings, and the oath or declaration) was sent or given to the non-signing inventor for review and proof that the non-signing inventor refuses to join in the application or
b) proof that the non-signing inventor cannot be found or reached after diligent effort;
(5) a declaration which complies with 37 CFR §1.63.

indicating that a fully executed oath or declaration and the associated surcharge were required. This Notice set a two-month period for reply.

Along with the instant petition, Petitioner has submitted the petition fee, the surcharge, a five-month extension of time to make timely this response[2], a statement of facts, a declaration which has been executed by each of the joint inventors save Mr. Peralta, and the last known address for non-signing inventor.

Petitioner has met requirements (1) – (5) of 37 C.F.R. §1.47(a).

The petition is **GRANTED** and this application is hereby accorded Rule §1.47(a) status.

As provided in Rule 1.47(a), this Office will forward notice of this application's filing to the non-signing inventor at the address given in the petition. Notice of the filing of this application will also be published in the Official Gazette.

Telephone inquiries regarding this decision should be directed to the undersigned at (571) 272-3225. All other inquiries concerning examination procedures or status of the application should be directed to the Technology Center.

Paul Shanoski
Senior Attorney
Office of Petitions
United States Patent and Trademark Office

2 The submission contains a certificate of mailing dated November 15, 2005.

UNITED STATES PATENT AND TRADEMARK OFFICE

Commissioner for Patents
United States Patent and Trademark Office
P.O. Box 1450
Alexandria, VA 22313-1450
www.uspto.gov

CLARK & ELBING, LLP
101 FEDERAL STREET
BOSTON, MA 02110

COPY MAILED

FEB 0 1 2008

OFFICE OF PETITIONS

In re Application of :
Avi J. Ashkenazi et al. :
Application No. 11/069,473 : DECISION ON PETITION
Filed: February 28, 2005 :
Attorney Docket No. 50474/003004 :

This is a decision on the petition under the unintentional provisions of 37 CFR 1.137(b), filed November 1, 2007, to revive the above-identified application.

The petition is **GRANTED**.

The application became abandoned for failure to reply in a timely manner to the Restriction Requirement mailed March 27, 2007 which set a shortened statutory period for reply of one (1) month or thirty (30) days (whichever is later). No extensions of time under the provisions of 37 CFR 1.136(a) were obtained. Accordingly, the application became abandoned on April 28, 2007. A Notice of Abandonment was mailed on October 29, 2007.

The petition satisfies the requirements of 37 CFR 1.137(b) in that petitioner has supplied (1) the reply in the form of an amendment and election, (2) the petition fee of $1,540.00, and (3) an adequate statement of unintentional delay.

While the assignee attempted to intervene in the above-identified application, the Power of Attorney filed on April 30, 2007, does not comply with the requirements of 37 CFR 3.73(b). 37 CFR 3.73(b)(1)(i), requires a statement that the documentary evidence of the chain of title from the original owner to the assignee was, or concurrently is being, submitted for recordation pursuant to 37 CFR 3.11. Therefore, in order to perfect the power of attorney filed on April 30, 2007, compliance with 37 CFR 3.73(b) must be satisfied.

37 CFR 1.137(b)(3) requires a statement that the entire delay in filing the required reply from the due date for the reply until the filing of a grantable petition pursuant to 37 CFR 1.137(b) was unintentional. Since the statement contained in the petition varies from the language required by 37 CFR 1.137(b)(3), the statement contained in the petition is being construed as the statement required by 37 CFR 1.137(b)(3). Petitioner must notify the Office if this is **not** a correct interpretation of the statement contained in the petition.

Telephone inquiries concerning this decision should be directed to Kimberly Inabinet at (571) 272-4618.

This application is being referred to Technology Center AU 1645 for appropriate action by the Examiner in the normal course of business on the reply received November 1, 2007.

Andrea Smith
Petitions Examiner
Office of Petitions

SPE RESPONSE FOR CERTIFICATE OF CORRECTION

Paper No.: X

DATE : July 21, 2008

TO SPE OF : ART UNIT 2824

SUBJECT : Request for Certificate of Correction for Appl. No.: 11/069489 Patent No.: 7233543 B2

A response is requested with respect to a request for a certificate of correction.

With respect to the change(s) requested to correct Office and/or Applicant's errors, should the patent read as shown in the certificate of correction attached herewith or the COCIN document(s), in IFW images for the above-identified patented application? No new matter should be introduced, nor should the scope or meaning of the claims be changed.

If the response is for an IFW, within **7** days, please complete and forward the response, to the employee (named below) via scanning into application images, using document code **COCX**.

DO NOT SENT TO ATTORNEY

If the response is for a paper file wrapper, please complete the response and forward the response with the paper file wrapper, to the employee (named below), within **7** days, to:

Certificates of Correction Branch (CofC)
South Tower - 9A22
Palm Location 7580

You can fax the Directors/SPE response to 571-270-9990

LAMONTE NEWSOME
Certificates of Correction Branch
703-308-9390 ext. 112

Thank You For Your Assistance

The request for issuing the above-identified correction(s) is hereby:

Note your decision on the appropriate box.

- ☐ **Approved** — **All** changes apply.
- ☐ **Approved in Part** — Specify below which changes **do not** apply.
- ☐ **Denied** — State the reasons for denial below.

Comments: The correction is OK.

SPE **Art Unit**

UNITED STATES PATENT AND TRADEMARK OFFICE

UNITED STATES DEPARTMENT OF COMMERCE
United States Patent and Trademark Office
Address: COMMISSIONER FOR PATENTS
P.O. Box 1450
Alexandria, Virginia 22313-1450
www.uspto.gov

Stolowitz Ford Cowger LLP
621 SW Morrison St
Suite 600
Portland, OR 97205

Mail Date: 04/21/2010

Applicant	: James A. Moorer	: DECISION ON REQUEST FOR
Patent Number	: 7606373	: RECALCULATION of PATENT
Issue Date	: 10/20/2009	: TERM ADJUSTMENT IN VIEW
Appliction No	: 11/069,533	: OF WYETH AND NOTICE OF INTENT TO
Filed	: 02/25/2005	: ISSUE CERTIFICATE OF CORRECTION
		:

The Request for Recalculation is **GRANTED** to the extent indicated.

The patent term adjustment has been determined to be **1258** days. The USPTO will *sua sponte* issue a certificate of correction reflecting the amount of PTA days determined by the recalculation.

Prior to the issuance of the certificate of correction, the USPTO will afford patentee an opportunity to be heard and request reconsideration. Accordingly, patentee has **one month or thirty (30) days**, whichever is longer, to file a request for reconsideration of this patent term adjustment calculation. See 35 U.S.C. 154(b)(3)(B)(ii) and 37 CFR 1.322(a)(4). No extensions of time will be granted under 37 CFR 1.136.

Patentee should use document code PET.OP if electronically filing a request for reconsideration of this patent term adjustment calculation. The patentee must also include the information required by 37 CFR 1.705(b)(2) and the fee required by 37 CFR 1.18(e). If patentee does not file a timely request for reconsideration of this patent term adjustment calculation including the information required by 37 CFR 1.705(b)(2) and the fee required by 37 CFR 1.18(e), the USPTO will issue a certificate of correction reflecting the PTA determination noted above.

Patentee should be aware that in order to preserve the right to review in the United States District Court for the District of Columbia of the USPTO patent term adjustment determination, patentee must ensure that he or she also take the steps required under 35 U.S.C. 154(b)(4)(A) in a timely manner. Nothing in the request for recalculation should be construed as providing an alternative time frame for commencing a civil action under 35 U.S.C. 154(b)(4)(A).

Any questions concerning this decision should be directed to the Office of Patent Legal Administration at 571-272-7702.

UNITED STATES PATENT AND TRADEMARK OFFICE

Commissioner for Patents
United States Patent and Trademark Office
P.O. Box 1450
Alexandria, VA 22313-1450
www.uspto.gov

Kenyon & Kenyon LLP
One Broadway
New York, NY 10004

COPY MAILED

DEC 28 2006

OFFICE OF PETITIONS

In re Application of
Lockamon[1] et al.
Application No. 11/069,535
Filed: February 28, 2005
Attorney Docket No. 12093/10022

DECISION ON PETITION

This is a decision on the petition filed September 18, 2006, which is being treated as a petition under 37 CFR 1.181 to withdraw the holding of abandonment in the above-identified application.

The petition is **GRANTED**.

On January 30, 2006, the Office mailed a Restriction Requirement, which set a one-month (not less than 30 days) shortened statutory period for reply. Extensions of time were permitted under the provisions of 37 CFR 1.136(a). In the absence of a timely filed reply, the Office mailed a Notice of Abandonment on September 6, 2006.

Petitioners asserted that they submitted a timely reply to the Restriction Requirement, which contained a certificate of mailing dated February 23, 2006. With the present petition, petitioners submitted a copy of the previously mailed reply in the form of an election, bearing a certificate of mailing dated February 23, 2006. The certificate of mailing of February 23, 2006, would have rendered the reply timely filed if received in the USPTO. However, the application file does not include the original reply with the certificate of mailing.

Pursuant to 37 CFR 1.8(b):

> In the event that correspondence is considered timely filed by being mailed or transmitted in accordance with paragraph (a) of this section, but not received in the U.S. Patent and Trademark Office after a reasonable amount of time has elapsed from the time of mailing or transmitting of the correspondence, or after the application is held to be abandoned, or after the proceeding is

[1] The present correspondence identified Michael D. Davis as the first named inventor in the heading. The Office notes that Mr. Davis is not an inventor of record. If petitioners wish to add Mr. Davis as a joint inventor, petitioners must submit a petition under 37 CFR 1.48 accompanied by the requisite fee.

dismissed, terminated, or decided with prejudice, the correspondence will be considered timely if the party who forwarded such correspondence:

(1) Informs the Office of the previous mailing or transmission of the correspondence promptly after becoming aware that the Office has no evidence of receipt of the correspondence;

(2) Supplies an additional copy of the previously mailed or transmitted correspondence and certificate; and

(3) Includes a statement which attests on a personal knowledge basis or to the satisfaction of the Director to the previous timely mailing or transmission. If the correspondence was sent by facsimile transmission, a copy of the sending unit's report confirming transmission may be used to support this statement.

The petition satisfies the requirements of 37 CFR 1.8(b). Accordingly, the holding of abandonment for failure to file a timely reply to the Restriction Requirement of January 30, 2006, is withdrawn and the application is restored to pending status. The Office will accept the copy of the reply submitted with the petition on September 18, 2006, in place of the reply mailed on February 23, 2006.

This application is being referred to Technology Center AU 3663 for appropriate action on the amendment submitted on September 18, 2006 (certificate of mailing dated February 23, 2006).

As no petition fee is required, the Office will refund $1,500.00 to the Deposit Account.

Telephone inquiries specific to this decision should be directed to the undersigned at (571) 272-3211. All other questions regarding the status of the application or the examination process should be directed to the Technology Center.

Christina Tartera Donnell

Christina Tartera Donnell
Senior Petitions Attorney
Office of Petitions

SPE RESPONSE FOR CERTIFICATE OF CORRECTION

Paper No.: ____

DATE : 11/5/08

TO SPE OF : ART UNIT 1797

SUBJECT : Request for Certificate of Correction for Appl. No.: 11/069541 Patent No.: 7041142 B2

Please respond to this request for a certificate of correction within 7 days.

FOR IFW FILES:

Please review the requested changes/corrections as shown in the **COCIN** document(s) in the IFW application image. No new matter should be introduced, nor should the scope or meaning of the claims be changed.

Please complete the response (see below) and forward the completed response to scanning using document code **COCX**.

FOR PAPER FILES:

Please review the requested changes/corrections as shown in the attached certificate of correction. Please complete this form (see below) and forward it with the file to:

Certificates of Correction Branch (CofC)
South Tower - 9A22
Palm Location 7580

Virginia Tolbert
Certificates of Correction Branch
703-308-9390 ext. 113

Thank You For Your Assistance

The request for issuing the above-identified correction(s) is hereby:
Note your decision on the appropriate box.

- [X] **Approved** — All changes apply.
- [ ] **Approved in Part** — Specify below which changes **do not** apply.
- [ ] **Denied** — State the reasons for denial below.

Comments: OK

DUANE SMITH
SUPERVISORY PATENT EXAMINER
SPE

1797
Art Unit

UNITED STATES PATENT AND TRADEMARK OFFICE

Commissioner for Patents
United States Patent and Trademark Office
P.O. Box 1450
Alexandria, VA 22313-1450
www.uspto.gov

OSI PHARMACEUTICALS, INC.
41 PINELAWN ROAD
MELVILLE NY 11747

COPY MAILED

JAN 0 5 2007

OFFICE OF PETITIONS

In re Application of	:	
Demuth et al.	:	DECISION ON PETITION
Application No. 11/069,544	:	
Filed: 03/01/2005	:	
Attorney Docket No. PBD-00004-CIP-DIV	:	

This is a decision on the petition under 37 CFR 1.137(b), filed March 16, 2006, to revive the above-identified application.

The above-identified application became abandoned for failure to file a timely response to the Notice to File Corrected Application Papers, mailed April 28, 2005, which set a two-month extendable period to correct any informality. The above-identified application became abandoned on June 29, 2005. On January 6, 2006, the Office mailed a Notice of Abandonment.

Petitioner has met the requirements to revive the above-identified application pursuant to 37 CFR 1.137(b). Petitioner submitted the required reply, paid the petition fee, and made the proper statement of unintentional delay. Accordingly, the petition is **granted.**

This matter is being referred to the Office of Initial Patent Examination.

Telephone inquiries specific to this decision may be directed to the undersigned at (571) 272-3211. All other inquiries concerning either the examination procedures or status of the application should be directed to the Office of Initial Patent Examination.

C. T. Donnell

Christina Tartera Donnell
Senior Petitions Attorney
Office of Petitions

UNITED STATES PATENT AND TRADEMARK OFFICE

Commissioner for Patents
United States Patent and Trademark Office
P.O. Box 1450
Alexandria, VA 22313-1450
www.uspto.gov

COPY MAILED

SEP 19 2006

OFFICE OF PETITIONS

ARTHUR FREILICH
9045 CORBIN AVE, #260
NORTHRIDGE CA 91324-3343

In re Application of

SHELTON, et al.
Application No. 11/069,573
Filed: February 28, 2005
Attorney Docket No. 202/538: MA-124

DECISION ON PETITION
TO WITHDRAW
FROM RECORD

This is a decision on the Request to Withdraw as attorney or agent of record under 37 C.F.R. § 1.36(b), filed May 2, 2006.

The request is **APPROVED**.

A grantable request to withdraw as attorney/agent of record must be signed by every attorney/agent seeking to withdraw or contain a clear indication that one attorney is signing on behalf of another/others. A request to withdraw will not be approved unless at least 30 (thirty) days would remain between the date of approval and the later of the expiration date of a time to file a response or the expiration date of the maximum time period which can be extended under 37 C.F.R. § 1.136(a).

The request was signed by Arthur Freilich on behalf of all attorneys of record. All attorneys/agents associated have been withdrawn. Applicant is reminded that there is no attorney of record at this time.

The request to change the correspondence of record is not acceptable as the requested correspondence address is not that of: (1) the first named signing inventor; or (2) an intervening assignee of the entire interest under 37 C.F.R 3.71. All future communications from the Office will be directed to the first named signing inventor at the first copied address below until otherwise properly notified by the applicant.

Telephone inquiries concerning this decision should be directed to Monica A. Graves at 571-272-7253.

Amelia Au
Petitions Examiner
Office of Petitions

cc: **Brian M. Shelton**
17816 Kinzie Street #316
Northridge, CA 91325

cc: **Advanced Bionics Corporation**
Attn: BRYANT R. GOLD
25129 Rye Canyon Loop
Valencia, CA 91355

UNITED STATES PATENT AND TRADEMARK OFFICE

UNITED STATES DEPARTMENT OF COMMERCE
United States Patent and Trademark Office
Address: COMMISSIONER FOR PATENTS
P.O. Box 1450
Alexandria, Virginia 22313-1450
www.uspto.gov

APPLICATION NUMBER	FILING OR 371 (c) DATE	FIRST NAMED APPLICANT	ATTY. DOCKET NO./TITLE
11/069,573	02/28/2005	Brian M. Shelton	202/538 MA-124

CONFIRMATION NO. 6881

OC000000020139643

27224
ARTHUR FREILICH
9045 CORBIN AVE, #260
NORTHRIDGE, CA 91324-3343

Date Mailed: 08/22/2006

NOTICE REGARDING CHANGE OF POWER OF ATTORNEY

This is in response to the Power of Attorney filed 05/02/2006.

- The withdrawal as attorney in this application has been accepted. Future correspondence will be mailed to the new address of record. 37 CFR 1.33.

MONICA A GRAVES
OP (571) 272-7253

FORMER ATTORNEY/AGENT COPY

UNITED STATES PATENT AND TRADEMARK OFFICE

Commissioner for Patents
United States Patent and Trademark Office
P.O. Box 1450
Alexandria, VA 22313-1450
www.uspto.gov

DAVIDSON BERQUIST JACKSON & GOWDEY LLP
4300 WILSON BLVD., 7TH FLOOR
ARLINGTON VA 22203

COPY MAILED

JUL 1 8 2007

OFFICE OF PETITIONS

In re Application of	:	
Allen Lubow	:	
Application No. 11/069,579	:	DECISION ON PETITION
Filed: March 1, 2005	:	
Attorney Docket No. 2662-0012	:	

This is a decision on the petition filed in the above-identified application.

The petition is dismissed.

Any request for reconsideration of this decision must be submitted within TWO (2) MONTHS from the mail date of this decision. Extensions of time under 37 CFR 1.136(a) are permitted. The reconsideration request should include a cover letter entitled "Renewed Petition under 37 CFR 1.137(b)." This is **not** a final agency action within the meaning of 5 U.S.C. § 704.

The application became abandoned for failure s to timely pay the issue and publication fees on or before February 6, 2007, as required by the Notice of Allowance and Fee(s) Due, mailed November 6, 2006, which set a statutory period for reply of three (3) months. Accordingly, the application became abandoned on February 7, 2007.

The rules and statutory provisions governing the operations of the U.S. Patent and Trademark Office require payment of a fee on filing each petition to revive an abandoned application for patent based on unintentional delay or to accept an unintentionally delayed payment of a fee for issuing a patent. In this instance, the fee required by law is $1500.00. If applicant can qualify as a "small entity," as is claimed in the present petition, and does so prior to or together with the payment of the fee, the fee will be one-half of the amount indicated ($750.00). See 37 CFR 1.27.

The petition in the above-identified application was <u>not</u> accompanied by payment of the required fee. No consideration on the merits can be given that petition until the required fee is received.

Further correspondence with respect to this matter should be addressed as follows:

By mail: Mail Stop PETITIONS
Commissioner for Patents
Post Office Box 1450
Alexandria, VA 22313-1450

By hand: Customer Service Window
Mail Stop Petitions
Randolph Building
401 Dulany Street
Alexandria, VA 22314

By fax: (571) 273-8300
ATTN: Office of Petitions

Any questions concerning this matter may be directed to Christopher Bottorff at (571) 272-6052 or in his absence, the undersigned at (571) 272-7099.

David Bucci
Petitions Examiner
Office of Petitions

UNITED STATES PATENT AND TRADEMARK OFFICE

Commissioner for Patents
United States Patent and Trademark Office
P.O. Box 1450
Alexandria, VA 22313-1450
www.uspto.gov

DAVIDSON BERQUIST JACKSON & GOWDEY LLP
4300 WILSON BLVD., 7TH FLOOR
ARLINGTON VA 22203

COPY MAILED
AUG 0 2 2007
OFFICE OF PETITIONS

In re Application of	:	
Allen Lubow	:	
Application No. 11/069,579	:	DECISION ON PETITION
Filed: March 1, 2005	:	
Attorney Docket No. 2662-0012	:	

This is a decision on the petition under the unintentional provisions of 37 CFR 1.137(b), filed July 23, 2007, to revive the above-identified application.

The petition is **GRANTED**.

The application became abandoned for failure s to timely pay the issue and publication fees on or before February 6, 2007, as required by the Notice of Allowance and Fee(s) Due, mailed November 6, 2006, which set a statutory period for reply of three (3) months. Accordingly, the application became abandoned on February 7, 2007.

The petition satisfies the requirements of 37 CFR 1.137(b) in that petitioner has supplied (1) the reply in the form of payment of the issue fee of $700.00 and publication fee of $300.00, (2) the petition fee of $750.00; and (3) a proper statement of unintentional delay.

Telephone inquiries concerning this decision should be directed to Christopher Bottorff at (571) 272-6052 or in his absence, the undersigned at (571) 272-7099.

This application is being referred to Publishing Division for processing into a patent.

David Bucci
Petitions Examiner
Office of Petitions

UNITED STATES PATENT AND TRADEMARK OFFICE

Commissioner for Patents
United States Patent and Trademark Office
P.O. Box 1450
Alexandria, VA 22313-1450
www.uspto.gov

COPY MAILED

MAY 31 2007

OFFICE OF PETITIONS

FISH & RICHARDSON PC
P.O. BOX 1022
MINNEAPOLIS MN 55440-1022

In re Application of

WANG, Chang-Ning J.
Application No. 11/069,631
Filed: February 28, 2005
Attorney Docket No. **06498-007001**

DECISION ON PETITION
TO WITHDRAW
FROM RECORD

This is a decision on the Request to Withdraw as attorney or agent of record under 37 C.F.R. § 1.36(b), filed March 18, 2007.

The request is **APPROVED**.

A grantable request to withdraw as attorney/agent of record must be signed by every attorney/agent seeking to withdraw or contain a clear indication that one attorney is signing on behalf of another/others. A request to withdraw will not be approved unless at least 30 (thirty) days would remain between the date of approval and the later of the expiration date of a time to file a response or the expiration date of the maximum time period which can be extended under 37 C.F.R. § 1.136(a).

The request was signed by Y. Rocky Tsao on behalf of all attorneys of record who are associated with customer No. 26161. All attorneys/agents associated have been withdrawn. Applicant is reminded that there is no attorney of record at this time.

The request to change the correspondence of record is not acceptable as the requested correspondence address is not that of: (1) the first named signing inventor; or (2) an intervening assignee of the entire interest under 37 C.F.R 3.71. All future communications from the Office will be directed to the first named signing inventor or the assignee of the entire interest at the first copied address below until otherwise properly notified by the applicant.

There is an outstanding Office action mailed January 11, 2007 that requires a reply from the applicant.

Telephone inquiries concerning this decision should be directed to Michelle R. Eason at 571-272-4231.

Terri Williams
Petitions Examiner
Office of Petitions

cc: **CHANG-NING J. WANG**
2 WOBURN STREET
ANDOVER, MA 01810

cc: **BIOTRONICS CORPORATION**
50 STEDMAN STREET
SUITE 1A
LOWELL, MA 01851

UNITED STATES PATENT AND TRADEMARK OFFICE

UNITED STATES DEPARTMENT OF COMMERCE
United States Patent and Trademark Office
Address: COMMISSIONER FOR PATENTS
P.O. Box 1450
Alexandria, Virginia 22313-1450
www.uspto.gov

APPLICATION NUMBER	FILING OR 371 (c) DATE	FIRST NAMED APPLICANT	ATTY. DOCKET NO./TITLE
11/069,631	02/28/2005	Chang-Ning J. Wang	06498-007001

CONFIRMATION NO. 8814

OC000000024057556

26161
FISH & RICHARDSON PC
P.O. BOX 1022
MINNEAPOLIS, MN 55440-1022

Date Mailed: 05/24/2007

NOTICE REGARDING CHANGE OF POWER OF ATTORNEY

This is in response to the Power of Attorney filed 03/18/2007.

- The withdrawal as attorney in this application has been accepted. Future correspondence will be mailed to the new address of record. 37 CFR 1.33.

Michelle R. Eason
Office of Initial Patent Examination (571) 272-4000, or 1-800-PTO-9199
FORMER ATTORNEY/AGENT COPY

UNITED STATES PATENT AND TRADEMARK OFFICE

UNITED STATES DEPARTMENT OF COMMERCE
United States Patent and Trademark Office
Address: COMMISSIONER FOR PATENTS
P.O. Box 1450
Alexandria, Virginia 22313-1450
www.uspto.gov

Mark S. Ellinger, Ph.D
FISH & RICHARDSON P.C., P.A.
60 South Sixth Street
Suite 3300
Minneapolis, MN 55402

Mail Date: 04/21/2010

Applicant	: Claudia Schmidt-Dannert	: DECISION ON REQUEST FOR
Patent Number	: 7604968	: RECALCULATION of PATENT
Issue Date	: 10/20/2009	: TERM ADJUSTMENT IN VIEW
Appliction No	: 11/069,633	: OF WYETH AND NOTICE OF INTENT TO
Filed	: 03/01/2005	: ISSUE CERTIFICATE OF CORRECTION
		:

The Request for Recalculation is **GRANTED** to the extent indicated.

The patent term adjustment has been determined to be **245** days. The USPTO will *sua sponte* issue a certificate of correction reflecting the amount of PTA days determined by the recalculation.

Prior to the issuance of the certificate of correction, the USPTO will afford patentee an opportunity to be heard and request reconsideration. Accordingly, patentee has **one month or thirty (30) days**, whichever is longer, to file a request for reconsideration of this patent term adjustment calculation. See 35 U.S.C. 154(b)(3)(B)(ii) and 37 CFR 1.322(a)(4). No extensions of time will be granted under 37 CFR 1.136.

Patentee should use document code PET.OP if electronically filing a request for reconsideration of this patent term adjustment calculation. The patentee must also include the information required by 37 CFR 1.705(b)(2) and the fee required by 37 CFR 1.18(e). If patentee does not file a timely request for reconsideration of this patent term adjustment calculation including the information required by 37 CFR 1.705(b)(2) and the fee required by 37 CFR 1.18(e), the USPTO will issue a certificate of correction reflecting the PTA determination noted above.

Patentee should be aware that in order to preserve the right to review in the United States District Court for the District of Columbia of the USPTO patent term adjustment determination, patentee must ensure that he or she also take the steps required under 35 U.S.C. 154(b)(4)(A) in a timely manner. Nothing in the request for recalculation should be construed as providing an alternative time frame for commencing a civil action under 35 U.S.C. 154(b)(4)(A).

Any questions concerning this decision should be directed to the Office of Patent Legal Administration at 571-272-7702.

UNITED STATES PATENT AND TRADEMARK OFFICE

UNITED STATES DEPARTMENT OF COMMERCE
United States Patent and Trademark Office
Address: COMMISSIONER FOR PATENTS
P.O. Box 1450
Alexandria, Virginia 22313-1450
www.uspto.gov

NORTEL NETWORKS LIMITED
3500 CARLING AVENUE
OTTAWA, ON K2H 8E9
CANADA

Mail Date: 05/13/2010

Applicant	: Stephen Bennett Elliott	: DECISION ON REQUEST FOR
Patent Number	: 7633972	: RECALCULATION of PATENT
Issue Date	: 12/15/2009	: TERM ADJUSTMENT IN VIEW
Application No	: 11/069,656	: OF WYETH AND NOTICE OF INTENT TO
Filed	: 03/01/2005	: ISSUE CERTIFICATE OF CORRECTION
		:

The Request for Recalculation is **GRANTED** to the extent indicated.

The patent term adjustment has been determined to be **1297** days. The USPTO will *sua sponte* issue a certificate of correction reflecting the amount of PTA days determined by the recalculation.

Prior to the issuance of the certificate of correction, the USPTO will afford patentee an opportunity to be heard and request reconsideration. Accordingly, patentee has **one month or thirty (30) days**, whichever is longer, to file a request for reconsideration of this patent term adjustment calculation. See 35 U.S.C. 154(b)(3)(B)(ii) and 37 CFR 1.322(a)(4). No extensions of time will be granted under 37 CFR 1.136.

Patentee should use document code PET.OP if electronically filing a request for reconsideration of this patent term adjustment calculation. The patentee must also include the information required by 37 CFR 1.705(b)(2) and the fee required by 37 CFR 1.18(e). If patentee does not file a timely request for reconsideration of this patent term adjustment calculation including the information required by 37 CFR 1.705(b)(2) and the fee required by 37 CFR 1.18(e), the USPTO will issue a certificate of correction reflecting the PTA determination noted above.

Patentee should be aware that in order to preserve the right to review in the United States District Court for the District of Columbia of the USPTO patent term adjustment determination, patentee must ensure that he or she also take the steps required under 35 U.S.C. 154(b)(4)(A) in a timely manner. Nothing in the request for recalculation should be construed as providing an alternative time frame for commencing a civil action under 35 U.S.C. 154(b)(4)(A).

Any questions concerning this decision should be directed to the Office of Patent Legal Administration at 571-272-7702.

SPE RESPONSE FOR CERTIFICATE OF CORRECTION

Paper No.: _____

DATE : 12-7-06

TO SPE OF : ART UNIT 2817

SUBJECT : Request for Certificate of Correction for Appl. No.: 11/069664 Patent No.: 7135934

Please respond to this request for a certificate of correction within 7 days.

Please review the requested changes/corrections as shown in the **COCIN** document(s) in the IFW application image. No new matter should be introduced, nor should the scope or meaning of the claims be changed.

Should Inventor's be Approved

Please complete the response (see below) and forward the completed response to scanning using document code **COCX**.

Certificates of Correction Branch

703-308-9390 ext. 117

Thank You For Your Assistance

The request for issuing the above-identified correction(s) is hereby:

Note your decision on the appropriate box.

- ☑ **Approved** — All changes apply.
- ☐ **Approved in Part** — Specify below which changes do not apply.
- ☐ **Denied** — State the reasons for denial below.

Comments: YES.

SPE

2817

Art Unit

UNITED STATES PATENT AND TRADEMARK OFFICE

Commissioner for Patents
United States Patent and Trademark Office
P.O. Box 1450
Alexandria, VA 22313-1450
www.uspto.gov

COPY MAILED

JUN 0 5 2009

OFFICE OF PETITIONS

Townsend and Townsend and Crew, LLP
Two Embarcadero Center
Eighth Floor
San Francisco, CA 94111-3834

In re Application of	:	
Stanley Levy, Jr. et al.	:	
Application No. 11/069,681	:	DECISION ON PETITION
Filed: March 1, 2005	:	TO WITHDRAW
Attorney Docket No. 017761-002420US	:	FROM RECORD
	:	

This is a decision on the Request to Withdraw as attorney or agent of record under 37 C.F.R. § 1.36(b), filed June 5, 2006.

The request is **moot because a revocation of power of attorney has been filed**.

A review of the file record indicates that the power of attorney to Mark D. Barrish and all attorneys/agents of record has been revoked by the assignee of the patent application on August 18, 2006. Accordingly, the request to withdraw under 37 C.F.R. § 1.36(b) is moot.

All future communications from the Office will continue to be directed to the below-listed address until otherwise notified by applicant.

Telephone inquires concerning this decision should be directed to Kimberly Inabinet at 571-272-4618.

Kimberly Inabinet
Petitions Examiner
Office of Petitions

cc: OPPENHEIMER WOLFF & DONNELLY LLP
45 SOUTH SEVENTH STREET, SUITE 3300
MINNEAPOLIS MN 55402

UNITED STATES PATENT AND TRADEMARK OFFICE

UNITED STATES DEPARTMENT OF COMMERCE
United States Patent and Trademark Office
Address: COMMISSIONER FOR PATENTS
P.O. Box 1450
Alexandria, Virginia 22313-1450
www.uspto.gov

M.H.K.K.G., P.C. / ADOBE SYSTEMS INCORPORATED
P.O. BOX 398
AUSTIN, TX 78767-0398

Mail Date: 04/20/2010

Applicant	: Lubomir B. Bourdev	: DECISION ON REQUEST FOR
Patent Number	: 7587101	: RECALCULATION of PATENT
Issue Date	: 09/08/2009	: TERM ADJUSTMENT IN VIEW
Appliction No	: 11/069,692	: OF WYETH AND NOTICE OF INTENT TO
Filed	: 02/28/2005	: ISSUE CERTIFICATE OF CORRECTION
		:

The Request for Recalculation is **GRANTED** to the extent indicated.

The patent term adjustment has been determined to be **1229** days. The USPTO will *sua sponte* issue a certificate of correction reflecting the amount of PTA days determined by the recalculation.

Prior to the issuance of the certificate of correction, the USPTO will afford patentee an opportunity to be heard and request reconsideration. Accordingly, patentee has **one month or thirty (30) days**, whichever is longer, to file a request for reconsideration of this patent term adjustment calculation. See 35 U.S.C. 154(b)(3)(B)(ii) and 37 CFR 1.322(a)(4). No extensions of time will be granted under 37 CFR 1.136.

Patentee should use document code PET.OP if electronically filing a request for reconsideration of this patent term adjustment calculation. The patentee must also include the information required by 37 CFR 1.705(b)(2) and the fee required by 37 CFR 1.18(e). If patentee does not file a timely request for reconsideration of this patent term adjustment calculation including the information required by 37 CFR 1.705(b)(2) and the fee required by 37 CFR 1.18(e), the USPTO will issue a certificate of correction reflecting the PTA determination noted above.

Patentee should be aware that in order to preserve the right to review in the United States District Court for the District of Columbia of the USPTO patent term adjustment determination, patentee must ensure that he or she also take the steps required under 35 U.S.C. 154(b)(4)(A) in a timely manner. Nothing in the request for recalculation should be construed as providing an alternative time frame for commencing a civil action under 35 U.S.C. 154(b)(4)(A).

Any questions concerning this decision should be directed to the Office of Patent Legal Administration at 571-272-7702.

UNITED STATES PATENT AND TRADEMARK OFFICE

UNITED STATES DEPARTMENT OF COMMERCE
United States Patent and Trademark Office
Address: COMMISSIONER FOR PATENTS
P.O. Box 1450
Alexandria, Virginia 22313-1450
www.uspto.gov

QUARLES & BRADY LLP
411 E. WISCONSIN AVENUE
SUITE 2040
MILWAUKEE, WI 53202-4497

Mail Date: 05/12/2010

Applicant	: Andy Kenowski	: DECISION ON REQUEST FOR
Patent Number	: 7614410	: RECALCULATION of PATENT
Issue Date	: 11/10/2009	: TERM ADJUSTMENT IN VIEW
Application No	: 11/069,702	: OF WYETH AND NOTICE OF INTENT TO
Filed	: 03/01/2005	: ISSUE CERTIFICATE OF CORRECTION
		:

The Request for Recalculation is **GRANTED** to the extent indicated.

The patent term adjustment has been determined to be **945** days. The USPTO will *sua sponte* issue a certificate of correction reflecting the amount of PTA days determined by the recalculation.

Prior to the issuance of the certificate of correction, the USPTO will afford patentee an opportunity to be heard and request reconsideration. Accordingly, patentee has **one month or thirty (30) days**, whichever is longer, to file a request for reconsideration of this patent term adjustment calculation. See 35 U.S.C. 154(b)(3)(B)(ii) and 37 CFR 1.322(a)(4). No extensions of time will be granted under 37 CFR 1.136.

Patentee should use document code PET.OP if electronically filing a request for reconsideration of this patent term adjustment calculation. The patentee must also include the information required by 37 CFR 1.705(b)(2) and the fee required by 37 CFR 1.18(e). If patentee does not file a timely request for reconsideration of this patent term adjustment calculation including the information required by 37 CFR 1.705(b)(2) and the fee required by 37 CFR 1.18(e), the USPTO will issue a certificate of correction reflecting the PTA determination noted above.

Patentee should be aware that in order to preserve the right to review in the United States District Court for the District of Columbia of the USPTO patent term adjustment determination, patentee must ensure that he or she also take the steps required under 35 U.S.C. 154(b)(4)(A) in a timely manner. Nothing in the request for recalculation should be construed as providing an alternative time frame for commencing a civil action under 35 U.S.C. 154(b)(4)(A).

Any questions concerning this decision should be directed to the Office of Patent Legal Administration at 571-272-7702.

UNITED STATES PATENT AND TRADEMARK OFFICE

Commissioner for Patents
United States Patent and Trademark Office
P.O. Box 1450
Alexandria, VA 22313-1450
www.uspto.gov

COATS & BENNETT/INFINEON TECHNOLOGIES
1400 CRESCENT GREEN, SUITE 300
CARY NC 27518

COPY MAILED

JAN 0 2 2008

OFFICE OF PETITIONS

In re Application of
AIGNER, et al.
Application No. 11/069,715
Filed: March 1, 2005
Attorney Docket No. **5497-059**

: DECISION GRANTING PETITION
: UNDER 37 CFR 1.313(c)(2)

This is a decision on the petition under 37 CFR 1.313(c)(2), filed December 24, 2007, to withdraw the above-identified application from issue after payment of the issue fee.

The petition is **GRANTED.**

The above-identified application is withdrawn from issue for consideration of a submission under 37 CFR 1.114 (request for continued examination). *See* 37 CFR 1.313(c)(2).

Petitioner is advised that the issue fee paid on December 3, 2007 cannot be refunded. If, however, this application is again allowed, petitioner may request that it be applied towards the issue fee required by the new Notice of Allowance.[1]

Telephone inquiries should be directed to Monica A. Graves at (571) 272-7253.

This application is being referred to Technology Center AU 2817 for processing of the request for continued examination under 37 CFR 1.114 and for consideration of the concurrently filed information disclosure statement.

Karen Creasy
Petitions Examiner
Office of Petitions

[1] *The request to apply the issue fee to the new Notice may be satisfied by completing and returning the new Part B – Fee(s) Transmittal Form (along with any balance due at the time of submission). Petitioner is advised that the Issue Fee Transmittal Form* ***must*** *be completed and timely submitted to avoid abandonment of the application.*

UNITED STATES PATENT AND TRADEMARK OFFICE

Commissioner for Patents
United States Patent and Trademark Office
P.O. Box 1450
Alexandria, VA 22313-1450
www.uspto.gov

May 12, 2010

Scott Weitzel
Avago Technologies Limited
4380 Ziegler Road
MS: 76
Fort Collins, CO 80525

Patent No.	: 7,439,824 B2
Appl. No.	: 11/069,715
Inventor(s)	: Robert Aigner, et al.
Issued	: October 21, 2008
Title	: **BULK ACOUSTIC WAVE FILTER AND METHOD FOR ELIMINATING UNWANTED SIDE PASSBANDS**
Docket No.	: 2003-51887 US

Re: Request for Certificate of Correction

Consideration has been given your request for the issuance of a certificate of correction for the above-identified patent under the provisions of Rule 1.323.

Assignees' names and addresses (assignment data) printed in a patent, are based *solely* on information supplied in the appropriate space for identifying the assignment data, i.e., item 3 of the Issue Fee Transmittal Form PTOL-85B. Granting of a request under 37 CFR 3.81(b) is required to correct applicant's error providing ***incorrect or erroneous*** assignment data, *before* issuance of a Certificate of Correction, under 37 CFR 1.323 *(see Manual of Patent Examining Procedures (M.P.E.P) Chp.1400, sect. 1481).* This procedure is required *at any time after the issue fee is paid*, including after issuance of the patent.

In view of the foregoing, your request, in this matter, is hereby denied.

A petition to correct the Assignee under 37 CFR 3.81(b) should include:

A. **the processing fee set forth in 37 CFR 1.117(h) (currently $130);**
B. a statement that the failure to include the correct assignee name on the PTOL-85B was inadvertent; and
C. a copy of the Notice of Recordation of Assignment Document, reflecting the reel and frame number where the assignment(s) is recorded and/or reflecting proof of *the date* the assignment was submitted for recordation.

In the Request, Applicant(s) may request that the file be forwarded to Certificates of Correction Branch, for issuance of a Certificate of Correction, if the Request is granted.

Any request under 37 CFR 3.81(b) should be directed to the following address or facsimile number:

By mail:	Mail Stop PETITIONS Commissioner for Patents Post Office Box 1450 Alexandria, VA 22313-1450
By hand:	Customer Service Window Mail Stop Petitions Randolph Building 401 Dulany Street Alexandria, VA 22314
By fax:	(571) 273-8300 ATTN: Office of Petitions

If a fee (currently $100) was previously submitted for consideration of a Request for Certificate of Correction, under CFR 1.323, to correct assignment data, no additional fee is required.

/Virginia Tolbert/
Virginia Tolbert
For Mary F. Diggs
Decisions & Certificates
of Correction Branch
(571) 272-0460

SPE RESPONSE FOR CERTIFICATE OF CORRECTION

Paper No.:20100126

DATE : January 26, 2010

TO SPE OF : ART UNIT 2628

SUBJECT : Request for Certificate of Correction on Patent No.: 7,616,205

A response is requested with respect to the accompanying request for a certificate of correction.

Please complete this form and return with file, within **7** days to:
Certificates of Correction Branch - ST (South Tower) 9A22
Palm location **7590** - Tel. No. (703) 305-8309

With respect to the change(s) requested, correcting Office and/or Applicant's errors, should the patent read as shown in the certificate of correction? No new matter should be introduced, nor should the scope or meaning of the claims be changed.

Thank You For Your Assistance **Certificates of Correction Branch**

The request for issuing the above-identified correction(s) is hereby:

Note your decision on the appropriated box.

☒ **Approved** All changes apply.

☐ **Approved in Part** Specify below which changes **do not** apply.

☐ **Denied** State the reasons for denial below.

Comments:

UNITED STATES PATENT AND TRADEMARK OFFICE

UNITED STATES DEPARTMENT OF COMMERCE
United States Patent and Trademark Office
Address: COMMISSIONER FOR PATENTS
P.O. Box 1450
Alexandria, Virginia 22313-1450
www.uspto.gov

PEARNE & GORDON LLP
1801 EAST 9TH STREET
SUITE 1200
CLEVELAND, OH 44114-3108

Mail Date: 04/21/2010

Applicant	: Kazuhiko Matsumoto	: DECISION ON REQUEST FOR
Patent Number	: 7616205	: RECALCULATION of PATENT
Issue Date	: 11/10/2009	: TERM ADJUSTMENT IN VIEW
Appliction No	: 11/069,718	: OF WYETH AND NOTICE OF INTENT TO
Filed	: 03/01/2005	: ISSUE CERTIFICATE OF CORRECTION
		:

The Request for Recalculation is **GRANTED** to the extent indicated.

The patent term adjustment has been determined to be **1097** days. The USPTO will *sua sponte* issue a certificate of correction reflecting the amount of PTA days determined by the recalculation.

Prior to the issuance of the certificate of correction, the USPTO will afford patentee an opportunity to be heard and request reconsideration. Accordingly, patentee has **one month or thirty (30) days**, whichever is longer, to file a request for reconsideration of this patent term adjustment calculation. See 35 U.S.C. 154(b)(3)(B)(ii) and 37 CFR 1.322(a)(4). No extensions of time will be granted under 37 CFR 1.136.

Patentee should use document code PET.OP if electronically filing a request for reconsideration of this patent term adjustment calculation. The patentee must also include the information required by 37 CFR 1.705(b)(2) and the fee required by 37 CFR 1.18(e). If patentee does not file a timely request for reconsideration of this patent term adjustment calculation including the information required by 37 CFR 1.705(b)(2) and the fee required by 37 CFR 1.18(e), the USPTO will issue a certificate of correction reflecting the PTA determination noted above.

Patentee should be aware that in order to preserve the right to review in the United States District Court for the District of Columbia of the USPTO patent term adjustment determination, patentee must ensure that he or she also take the steps required under 35 U.S.C. 154(b)(4)(A) in a timely manner. Nothing in the request for recalculation should be construed as providing an alternative time frame for commencing a civil action under 35 U.S.C. 154(b)(4)(A).

Any questions concerning this decision should be directed to the Office of Patent Legal Administration at 571-272-7702.

UNITED STATES PATENT AND TRADEMARK OFFICE

COMMISSIONER FOR PATENTS
UNITED STATES PATENT AND TRADEMARK OFFICE
P.O. BOX 1450
ALEXANDRIA, VA 22313-1450
www.uspto.gov

PFIZER INC
Steve T. Zelson
150 EAST 42ND STREET
5TH FLOOR - STOP 49
NEW YORK NY 10017-5612

COPY MAILED

JAN 03 2008

OFFICE OF PETITIONS

In re Patent No. 7,265,119 :
Issued: September 4, 2007 :
Application No. 11/069,724 : PATENT TERM ADJUSTMENT
Filed: February 28, 2005 :
Dkt. No.: PC11872B :

This is a decision on the "Petition for Reconsideration of the Patent Term Adjustment (PTA) Indicated in the Issue Notification under 37 C.F.R. § 1.705(d)," filed November 2, 2007. This matter is being treated as an application for patent term adjustment pursuant to 37 CFR 1.705(d).

The application for patent term adjustment ("PTA") under 37 CFR 1.705(d) is **GRANTED TO THE EXTENT INDICATED HEREIN**.

The above-identified application matured into U.S. Patent No. 7,265,119 on September 4, 2007. The instant request for reconsideration was timely filed in accordance with 37 C.F.R. § 1.705(d). The patent issued with a PTA of 105 days. Patentees argue that the adjustment of 188 days was improperly reduced 83 days in connection with a Fee Address Transmittal submitted June 14, 2007. Patentees further argue that the application should not be subject to reduction in connection with the supplemental application datasheet (ADS) filed May 29, 2007.

The adjustment of 188 days under 37 CFR 1.702(a)(1) is undisputed by patentee.

A Fee Address Transmittal was submitted June 14, 2007. A fee address transmittal is not deemed a failure to engage in reasonable efforts to conclude prosecution within the meaning of 37 CFR 1.704(c)(10). Accordingly, the reduction of 83 days is hereby restored.

The Office failed to reduce the patent term adjustment in connection with the supplemental ADS submitted May 29, 2007. Patentees argue that the submission was the result of an

examiner request. However, review of the record reveals that the submission was necessitated due to applicants' errors during the course of prosecution. Specifically, on February 28, 2005, applicants filed an ADS which was inconsistent with the preliminary amendment also submitted February 28, 2005. The preliminary amendment made reference to a 35 USC 120 claim and the ADS did not. Further, on May 23, 2005, applicants filed a supplemental ADS which did not have a claim for priority to U.S. App. No. 10/139,730. See 37 CFR 1.76(d)(1). As a result of these inconsistencies, at the time of allowance, there was no priority claim to U.S. App. No. 10/139,730. Accordingly, applicants filed a supplemental ADS on May 29, 2007 to correct errors made during the course of prosecution. As a result, submission of the supplemental ADS on May 29, 2007 is deemed a failure to engage in reasonable efforts to conclude prosecution within the meaning of 37 CFR 1.704(c)(10).

The reduction under 37 CFR 1.705(c)(10) totaling 99 days commenced May 29, 2007, the date that the supplemental ADS was filed, and ended September 4, 2007, the date that the patent issued.

Accordingly, at the time of issuance, the application was entitled to a patent term adjustment of 89 days.

Receipt is acknowledged of the required PTA application fee of $200.00.

This application file will be forwarded to the Certificate of Corrections branch for issuance of a certificate of correction to indicate that the term of this patent is extended or adjusted under 35 U.S.C. 154(b) by 89 days.

Telephone inquiries specific to this matter may be directed to Petitions Attorney Alesia M. Brown at (571) 272-3205.

Kery A Fries

Kery Fries
Senior Patent Attorney
Office of Patent Legal Administration
Office of Deputy Commissioner
for Patent Examination Policy

Enclosure: Draft Certificate of Correction

UNITED STATES PATENT AND TRADEMARK OFFICE

CERTIFICATE OF CORRECTION

PATENT	:	7,265,119 B2
DATED	:	September 4, 2007
INVENTOR(S)	:	Bogle, et al.

It is certified that error appears in the above-identified patent and that said Letters Patent is hereby corrected as shown below:

On the cover page,

[*] Notice: Subject to any disclaimer, the term of this patent is extended or adjusted under 35 USC 154(b) by 105 days

Delete the phrase "by 105 days" and insert – by 89 days--

Day : Wednesday

PALM INTRANET

Date: 1/2/2008
Time: 11:53:18

PTA Calculations for Application: 11/069724			
Application Filing Date:	02/28/2005	PTO Delay (PTO):	188
Issue Date of Patent:	09/04/2007	Three Years:	0
Pre-Issue Petitions:	0	Applicant Delay (APPL):	83
Post-Issue Petitions:	0	Total PTA (days):	89
PTO Delay Adjustment:	-16		

File Contents History

Number	Date	Contents Description	PTO	APPL	START
48	01/02/2008	ADJUSTMENT OF PTA CALCULATION BY PTO		16	
44	09/04/2007	PATENT ISSUE DATE USED IN PTA CALCULATION			
43	08/08/2007	EXPORT TO FINAL DATA CAPTURE			
42	08/07/2007	FINISHED INITIAL DATA CAPTURE			
41	08/07/2007	DISPATCH TO FDC			
40	07/20/2007	WORKFLOW - QUERY REQUEST - FINISH			
39	06/14/2007	MISCELLANEOUS INCOMING LETTER		83	
38	06/15/2007	APPLICATION IS CONSIDERED READY FOR ISSUE			
37	06/14/2007	ISSUE FEE PAYMENT VERIFIED			
36	06/14/2007	ISSUE FEE PAYMENT RECEIVED			
35	06/04/2007	TC RETURN TO PUBS			
34	05/04/2007	PUBS CASE REMAND TO TC			
33	05/08/2007	WORKFLOW - QUERY REQUEST - FINISH			
32	04/23/2007	EXPORT TO INITIAL DATA CAPTURE			
31	04/18/2007	MAIL NOTICE OF ALLOWANCE			
30	04/05/2007	ISSUE REVISION COMPLETED			
29	04/16/2007	NOTICE OF ALLOWANCE DATA VERIFICATION COMPLETED			
28	04/16/2007	CASE DOCKETED TO EXAMINER IN GAU			
27	04/05/2007	NOTICE OF ALLOWABILITY			
26	02/02/2007	AFFIDAVIT(S) (RULE 131 OR 132) OR EXHIBIT(S) RECEIVED			
25	02/02/2007	AFFIDAVIT(S) (RULE 131 OR 132) OR EXHIBIT(S) RECEIVED			
24	02/02/2007	AFFIDAVIT(S) (RULE 131 OR 132) OR EXHIBIT(S) RECEIVED			

23	02/02/2007	AFFIDAVIT(S) (RULE 131 OR 132) OR EXHIBIT(S) RECEIVED			
22	02/02/2007	AFFIDAVIT(S) (RULE 131 OR 132) OR EXHIBIT(S) RECEIVED			
21	02/02/2007	AFFIDAVIT(S) (RULE 131 OR 132) OR EXHIBIT(S) RECEIVED			
20	02/12/2007	DATE FORWARDED TO EXAMINER			
19	02/02/2007	RESPONSE AFTER NON-FINAL ACTION			
18	11/02/2006	MAIL NON-FINAL REJECTION	188		-1
17	10/30/2006	NON-FINAL REJECTION			
16	02/28/2005	INFORMATION DISCLOSURE STATEMENT CONSIDERED			
15	02/28/2005	REFERENCE CAPTURE ON IDS			
14	02/28/2005	INFORMATION DISCLOSURE STATEMENT (IDS) FILED			
13	02/28/2005	PRELIMINARY AMENDMENT			
12	04/01/2005	IFW TSS PROCESSING BY TECH CENTER COMPLETE			
11	04/01/2005	CASE DOCKETED TO EXAMINER IN GAU			
10	03/25/2005	APPLICATION RETURN FROM OIPE			
9	03/25/2005	APPLICATION IS NOW COMPLETE			
8	03/25/2005	APPLICATION RETURN TO OIPE			
7	03/25/2005	APPLICATION RETURN FROM OIPE			
6	03/25/2005	APPLICATION RETURN TO OIPE			
5	03/25/2005	APPLICATION DISPATCHED FROM OIPE			
4	03/25/2005	APPLICATION IS NOW COMPLETE			
3	03/18/2005	CLEARED BY OIPE CSR			
2	03/15/2005	IFW SCAN & PACR AUTO SECURITY REVIEW			
1	02/28/2005	INITIAL EXAM TEAM NN			

Search Another: Application# [ ] Search

EXPLANATION OF PTA CALCULATION

EXPLANATION OF PTE CALCULATION

To go back, right click here and select Back. To go forward, right click here and select Forward. To refresh, right click here and select Refresh.

Back to OASIS | Home page

UNITED STATES PATENT AND TRADEMARK OFFICE

COMMISSIONER FOR PATENTS
UNITED STATES PATENT AND TRADEMARK OFFICE
P.O. BOX 1450
ALEXANDRIA, VA 22313-1450
www.uspto.gov

STEPHEN J. SAND
ONE STAMFORD FORUM
201 TRESSER BOULEVARD
STAMFORD, CT 06901

COPY MAILED
AUG 19 2008

In re Application of
R. Richard Goehring, et al.
Application No. 11/069,728
Filed: March 1, 2005
Attorney Docket No. PT1047 DIV

ON PETITION

This is a decision in response to the petition, filed May 2, 2008, to revive the above-identified application under the provisions of 37 CFR 1.137(b).

The petition is **GRANTED**.

The application became abandoned for a failure to reply in a timely manner to a non-final Office action mailed September 24, 2007, which set a shortened statutory period for reply of three (3) months. No extension of time under the provisions of 37 CFR 1.136(a) was obtained. Accordingly, the application became abandoned on December 25, 2007. A Notice of Abandonment was mailed on April 7, 2008. In response, on May 2, 2008, the present petition was filed.

There is no indication that the person signing the instant petition was ever given a power of attorney or authorization of agent to prosecute the above-identified application. However, in accordance with 37 CFR 1.34(a), the signature of Marian E. Fundytus appearing on the petition shall constitute a representation to the United States Patent and Trademark Office that he is authorized to represent the particular party on whose behalf he acts. While a courtesy copy of this decision is being mailed Mr. Fundytus, all future correspondence will be directed solely to the address of record.

The petition satisfies the requirements of 37 CFR 1.137(b) in that petitioner has supplied (1) the reply in the form of amendment; (2) the petition fee of $1,540; and (3) an adequate statement of unintentional delay[1].

[1] 37 CFR 1.137(b)(3) requires a statement that the entire delay in filing the required reply from the due date for the reply until the filing of a grantable petition pursuant to 37 CFR 1.137(b) was unintentional. While the statement is not made by an attorney of record, such statement is being treated as having been made as the result of a reasonable inquiry into the facts and circumstances of such delay. See 37 CFR 10.18(b) and Changes to Patent Practice and Procedure; Final Rule Notice, 62 Fed. Reg. 53131, 53178 (October 10, 1997), 1203 Off. Gaz. Pat. Office 63, 103 (October 21, 1997). In the event that such an inquiry has not been made, petitioner must make such an inquiry. If such inquiry results in the discovery that it is not correct that the entire delay in filing the required reply from the due date for the reply until the filing of a grantable petition pursuant to 37 CFR 1.137(b) was unintentional, petitioner must notify the Office.

An extension of time under 37 CFR 1.136 must be filed prior to the expiration of the maximum extendable period for reply. *See* In re Application of S., 8 USPQ2d 1630, 1631 (Comm'r Pats. 1988). Since the $1,050 extension of time fee submitted with the petition on May 2, 2008 was subsequent to the maximum extendable period for reply, this fee is unnecessary and will be credited to petitioner's deposit account.

The application is being referred to Technology Center AU 1624 for appropriate action by the Examiner in the normal course of business on the reply received May 2, 2008.

Telephone inquiries concerning this decision should be directed to the undersigned at (571) 272-3204. Inquiries relating to further prosecution should be directed to the Technology Center.

Sherry D. Brinkley
Petitions Examiner
Office of Petitions

cc: MARIAN E. FUNDYTUS
6 CEDAR BROOK DRIVE
CRANBURY, NJ 08016

UNITED STATES PATENT AND TRADEMARK OFFICE

UNITED STATES DEPARTMENT OF COMMERCE
United States Patent and Trademark Office
Address: COMMISSIONER FOR PATENTS
P.O. Box 1450
Alexandria, Virginia 22313-1450
www.uspto.gov

MARSHALL, GERSTEIN & BORUN LLP
233 SOUTH WACKER DRIVE
6300 WILLIS TOWER
CHICAGO, IL 60606-6357

Mail Date: 04/21/2010

Applicant	: Steve S. Lee	: DECISION ON REQUEST FOR
Patent Number	: 7629329	: RECALCULATION of PATENT
Issue Date	: 12/08/2009	: TERM ADJUSTMENT IN VIEW
Appliction No	: 11/069,746	: OF WYETH AND NOTICE OF INTENT TO
Filed	: 02/28/2005	: ISSUE CERTIFICATE OF CORRECTION
		:

The Request for Recalculation is **GRANTED** to the extent indicated.

The patent term adjustment has been determined to be **1082** days. The USPTO will *sua sponte* issue a certificate of correction reflecting the amount of PTA days determined by the recalculation.

Prior to the issuance of the certificate of correction, the USPTO will afford patentee an opportunity to be heard and request reconsideration. Accordingly, patentee has **one month or thirty (30) days**, whichever is longer, to file a request for reconsideration of this patent term adjustment calculation. See 35 U.S.C. 154(b)(3)(B)(ii) and 37 CFR 1.322(a)(4). No extensions of time will be granted under 37 CFR 1.136.

Patentee should use document code PET.OP if electronically filing a request for reconsideration of this patent term adjustment calculation. The patentee must also include the information required by 37 CFR 1.705(b)(2) and the fee required by 37 CFR 1.18(e). If patentee does not file a timely request for reconsideration of this patent term adjustment calculation including the information required by 37 CFR 1.705(b)(2) and the fee required by 37 CFR 1.18(e), the USPTO will issue a certificate of correction reflecting the PTA determination noted above.

Patentee should be aware that in order to preserve the right to review in the United States District Court for the District of Columbia of the USPTO patent term adjustment determination, patentee must ensure that he or she also take the steps required under 35 U.S.C. 154(b)(4)(A) in a timely manner. Nothing in the request for recalculation should be construed as providing an alternative time frame for commencing a civil action under 35 U.S.C. 154(b)(4)(A).

Any questions concerning this decision should be directed to the Office of Patent Legal Administration at 571-272-7702.

UNITED STATES PATENT AND TRADEMARK OFFICE

Commissioner for Patents
United States Patent and Trademark Office
P.O. Box 1450
Alexandria, VA 22313-1450
www.uspto.gov

LINDEN, STAUFFER PATENTS
1006 MONTFORD RD.
CLEVELAND HTS. OH 44121

MAILED

FEB 17 2009

OFFICE OF PETITIONS

In re Application of	:	
SULL, Sanghoon et al.	:	
Application No. 11/069,750	:	DECISION ON PETITION
Filed: March 01, 2005	:	TO WITHDRAW
Attorney Docket No. **VIV-5C**	:	FROM RECORD
	:	

This is a decision on the Request to Withdraw as attorney or agent of record under 37 C.F.R. § 1.36(b), filed December 12, 2008.

The request is **APPROVED**.

A grantable request to withdraw as attorney/agent of record must be signed by every attorney/agent seeking to withdraw or contain a clear indication that one attorney is signing on behalf of another/others. The Office requires the practitioner(s) requesting withdrawal to certify that he, she, or they have: (1) given reasonable notice to the client, prior to the expiration of the response period, that the practitioner(s) intends to withdraw from employment; (2) delivered to the client or a duly authorized representative of the client all papers and property (including funds) to which the client is entitled; and (3) notified the client of any responses that may be due and the time frame within which the client must respond, pursuant 37 CFR 10.40(c).

The request was signed by Dwight A. Stauffer on behalf of all attorneys of record who are associated with customer No. 69186. All attorneys/agents associated have been withdrawn. Applicant is reminded that there is no attorney of record at this time.

The request to change the correspondence address of record is not acceptable as the requested correspondence address is not that of: (1) the first named signing inventor; or (2) an intervening assignee of the entire interest under 37 C.F.R 3.71. All future communications from the Office will be directed to the first named signing inventor.

There is an outstanding Office action mailed December 31, 2008 that requires a reply from the applicant.

Telephone inquiries concerning this decision should be directed to Michelle R. Eason at 571-272-4231.

Michelle R. Eason
Paralegal Specialist
Office of Petitions

cc: **SANGHOON SULL**
GAEPO 4-CHA WOOSUNG APT. 8-402
DOGOK-DONG, KANGNAM-KU
SEOUL, KOREA 135-270

cc: **JONES DAY**
222 EAST 41ST ST
NEW YORK, NY 10017

UNITED STATES PATENT AND TRADEMARK OFFICE

Commissioner for Patents
United States Patent and Trademark Office
P.O. Box 1450
Alexandria, VA 22313-1450
www.uspto.gov

MAILED

AUG 15 2005

DIRECTOR'S OFFICE
TECHNOLOGY CENTER 2600

ROBERTS ABOKHAIR & MARDULA
Suite 1000
11800 SUNRISE VALLEY DRIVE
RESTON, VA 20191

In re Application of:
Elwin M Beaty et al.
Application No. 11/069,757
Filed: February 28, 2005
For: ELECTRONIC COMPONENT PRODUCTS MADE ACCORDING TO A PROCESS THAT INCLUDES A METHOD FOR THREE DIMENSIONAL INSPECTION

DECISION ON PETITION TO MAKE SPECIAL

This is a decision on the petition filed June 29, 2005 under MPEP§708.02,VIII requesting accelerated examination.

The petition under Manual of Patent Examination Procedure §708.02, VIII, must:
(1) be filed prior to receiving any examination by the examiner,
(2) be accompanied by the required fee- $130,
(3) the claims should be directed to a single invention (if it is determined that the claims pertain to more than one invention, then applicant will have to make an election without traverse or forfeit accelerated examination status),
(4) state that a pre-examination search was made, and fully discuss the search method employed, such as classes and subclasses searched, publications, Chemical abstracts, patents, etc. A search made by a foreign patent office satisfies this requirement,
(5) be accompanied by a copy of each of the references most closely related to the subject matter encompassed by the claims if said references are not already of record,
(6) fully discuss the references, pointing out with the particularity required by 37 C.F.R. §1.111(b) and (c), how the claimed subject matter is patentable over the references.

The petition fails to fully meet requirement (6) inasmuch as there is no clear discussion of the patentable novelty over the references as required by 37 CFR §1.111 (c). Applicant' petition provides a detailed discussion of the references with respect to claim 1. However, some of the broader claims, i.e. claims 21, 36, 50, 66, and 117-125, have broader limitations where the patentable novelty of these claims has not been clearly pointed out. Therefore, the petition does not satisfy the requirement that the petition **must** fully discuss the references, pointing out with the particularity 37 C.F.R. §1.111(b) and (c), how the claimed subject matter is patentable over the references.

Accordingly, the petition is **DENIED**.

Should applicant desire reconsideration, he/she should supplement this petition by supplying the information as outlined above. No further petition fee is required.

Any request for reconsideration must be filed within **TWO MONTHS** of the date of this decision.

Doris To
Special Program Examiner
Technology Center 2600

UNITED STATES PATENT AND TRADEMARK OFFICE

Commissioner for Patents
United States Patent and Trademark Office
P.O. Box 1450
Alexandria, VA 22313-1450
www.uspto.gov

MAILED

SEP 22 2005

DIRECTOR'S OFFICE
TECHNOLOGY CENTER 2600

ROBERTS ABOKHAIR & MARDULA
Suite 1000
11800 SUNRISE VALLEY DRIVE
RESTON, VA 20191

In re Application of:
Elwin M Beaty et al.
Application No. 11/069,757
Filed: February 28, 2005
For: ELECTRONIC COMPONENT PRODUCTS MADE ACCORDING TO A PROCESS THAT INCLUDES A METHOD FOR THREE DIMENSIONAL INSPECTION

DECISION ON PETITION TO MAKE SPECIAL

This is a decision on the request for reconsideration filed September 6, 2005, on the decision mailed August 15, 2005 under MPEP§708.02,VIII requesting accelerated examination.

The petition under Manual of Patent Examination Procedure §708.02, VIII, must:
(1) be filed prior to receiving any examination by the examiner,
(2) be accompanied by the required fee- $130,
(3) the claims should be directed to a single invention (if it is determined that the claims pertain to more than one invention, then applicant will have to make an election without traverse or forfeit accelerated examination status),
(4) state that a pre-examination search was made, and fully discuss the search method employed, such as classes and subclasses searched, publications, Chemical abstracts, patents, etc. A search made by a foreign patent office satisfies this requirement,
(5) be accompanied by a copy of each of the references most closely related to the subject matter encompassed by the claims if said references are not already of record,
(6) fully discuss the references, pointing out with the particularity required by 37 C.F.R. §1.111(b) and (c), how the claimed subject matter is patentable over the references.

The petitioner meets all the above-listed requirements. Accordingly, the petition is **GRANTED**.

The application will retain its special status throughout its entire prosecution, including any appeal to the Board of Patent Appeals and Interferences, subject only to diligent prosecution by the applicant. The application file is being forwarded to the examiner for appropriate action in due course.

Doris To
Special Program Examiner
Technology Center 2600
Communications

UNITED STATES PATENT AND TRADEMARK OFFICE

COMMISSIONER FOR PATENTS
UNITED STATES PATENT AND TRADEMARK OFFICE
P.O. BOX 1450
ALEXANDRIA, VA 22313-1450
www.uspto.gov

Paper No.

David W. Carrithers
CARRITHERS LAW OFFICE, PLLC
6200 Dutchman's Lane
Suite 206
Louisville KY 40205

COPY MAILED

JUN 23 2008

OFFICE OF PETITIONS

In re Application of	:	
Ernest Spence	:	DECISION ON PETITION
Application No. 11/069,762	:	
Filed: March 1, 2005	:	
Atty Docket No. AE118/2002	:	

This is in response to the REQUEST FOR WITHDRAWAL OF ABANDONMENT AND REINSTATEMENT OF APPLICATION, filed March 25, 2008, pursuant to 37 C.F.R. § 1.181.

The above-identified application became abandoned for failure to file a reply to the non-final Office action mailed June 28, 2007. This Office action set a shortened statutory period for reply of three (3) months, with extensions of time obtainable under § 1.136(a). No reply considered filed and no extension of time considered obtained, the application became abandoned effective September 29, 2007. A courtesy Notice of Abandonment was mailed on January 9, 2008.

In response, applicants timely filed the instant petition. Applicants contend a response was filed with a three-month extension of time on December 28, 2007. In support thereof, applicants submit a copy of their return postcard and a copy of the response as originally filed.

Petitioner's evidence has been reviewed, and is persuasive. However, consideration of their evidence is unnecessary. Their response, including an extension of time, is present in the application with a date of receipt of January 2, 2008. Further, both the response and the necessary extension of time include a

certificate of mailing in compliance with 37 CFR 1.8 signed and dated December 28, 2007.

Further, the three-month extension of time, required to make the response timely, is of record paid by check with a mail room date of January 2, 2008.

Accordingly, the Notice of Abandonment mailed January 9, 2008 and the holding of abandonment are hereby **WITHDRAWN**.

The petition under § 1.181 is **GRANTED**.

No fee is required on petition under § 1.181.

The change of correspondence address filed March 25, 2008 is acknowledged and made of record.

Technology Center AU 3636 has been advised of this decision. The application file is, thereby, forwarded to the Technology Center's technical support staff to withdraw the holding of abandonment and for consideration by the examiner of the response timely filed on January 2, 2008 (with a certificate of mailing dated December 28, 2007).

Telephone inquiries specific to this decision should be directed to the undersigned at (571) 272-3219.

Nancy Johnson
Senior Petitions Attorney
Office of Petitions

UNITED STATES PATENT AND TRADEMARK OFFICE

Commissioner for Patents
United States Patent and Trademark Office
P.O. Box 1450
Alexandria, VA 22313-1450
www.uspto.gov

LINDEN, STAUFFER PATENTS
1006 MONTFORD RD.
CLEVELAND HTS. OH 44121

COPY MAILED

MAY 0 1 2009

OFFICE OF PETITIONS

In re Application of
SULL, Sanghoon et al.
Application No. 11/069,767
Filed: March 01, 2005
Attorney Docket No. **VIV-5A**

DECISION ON PETITION
TO WITHDRAW
FROM RECORD

This is a decision on the Request to Withdraw as attorney or agent of record under 37 C.F.R. § 1.36(b), filed December 12, 2008.

The request is **APPROVED**.

A grantable request to withdraw as attorney/agent of record must be signed by every attorney/agent seeking to withdraw or contain a clear indication that one attorney is signing on behalf of another/others. The Office requires the practitioner(s) requesting withdrawal to certify that he, she, or they have: (1) given reasonable notice to the client, prior to the expiration of the response period, that the practitioner(s) intends to withdraw from employment; (2) delivered to the client or a duly authorized representative of the client all papers and property (including funds) to which the client is entitled; and (3) notified the client of any responses that may be due and the time frame within which the client must respond, pursuant 37 CFR 10.40(c).

The request was signed by Dwight Staugger on behalf of all attorneys of record who are associated with customer No. 69186. All attorneys/agents associated with the Customer Number 69186 have been withdrawn. Applicant is reminded that there is no attorney of record at this time.

The request to change the correspondence address of record is not acceptable as the requested correspondence address is not that of: (1) the first named signing inventor; or (2) an intervening assignee of the entire interest under 37 C.F.R 3.71. All future communications from the Office will be directed to the first named signing inventor or the assignee of the entire interest at the first copied address below until otherwise properly notified by the applicant.

In order to request or take action in a patent matter, the assignee must establish its ownership of the patent to the satisfaction of the Director. In this regard, a Statement under 37 CFR 3.73(b) must have either: (i) documentary evidence of a chain of title from the original owner to the assignee (e.g., copy of an executed assignment), and a statement affirming that the documentary evidence of

the chain of title from the original owner to the assignee was or concurrently is being submitted for recordation pursuant to § 3.11; or (ii) a statement specifying where documentary evidence of a chain of title from the original owner to the assignee is recorded in the assignment records of the Office (e.g., reel and frame number).

The application became abandoned for failure to timely file a proper reply to the Office action mailed June 20, 2008.

Telephone inquiries concerning this decision should be directed to Tredelle Jackson at 571-272-2783.

Tredelle D. Jackson
Paralegal Specialist
Office of Petitions

cc: **SANGHOON SULL**
GAEPO 4-CHA WOOSUNG APT. 8-402
DOGOK-DONG, KANGNAM-KU
SEOUL, KOREA 135-270

cc: **JONES DAY**
222 EAST 41ST ST
NEW YORK, NY 10017

UNITED STATES PATENT AND TRADEMARK OFFICE

Commissioner for Patents
United States Patent and Trademark Office
P.O. Box 1450
Alexandria, VA 22313-1450
www.uspto.gov

LEYDIG VOIT & MAYER, LTD
TWO PRUDENTIAL PLAZA, SUITE 4900
180 NORTH STETSON AVENUE
CHICAGO, IL 60601-6731

COPY MAILED

JAN 22 2008

OFFICE OF PETITIONS

In re Application of	:	
Herman Uytterhoeven, et. al.	:	
Application No. 11/069,790	:	ON PETITION
Filed: March 1, 2005	:	
Attorney Docket No. 231553	:	

This is a decision on the petition under 37 CFR 1.137(b), filed on December 17, 2007, to revive the above-identified application.

The application became abandoned for failure to respond to the non-final Office action mailed June 12, 2007.

The petition satisfies the requirements of 37 CFR 1.137(b), in that, petitioner has supplied (1) the reply in the form of an amendment; (2) the petition fee of $1,540; and (3) a proper statement of unintentional delay. Therefore, the petition is **GRANTED**.

The Office acknowledges receipt of $1,050 for a three (3) months extension of time filed on December 17, 2007. However, an extension of time under 37 CFR 1.136 must be filed prior to the expiration of the maximum extendable period for reply. See In re Application of S., 8 USPQ2d 1630, 1631 (Comm'r. Pats. 1988). Accordingly, since the $1,050 extension of time was subsequent to the maximum extendable period for reply, this fee is unnecessary and will be credited to petitioner's deposit account.

This application file is being referred to Technology Center Art Unit 1795, for review of the amendment filed with the instant petition.

Telephone inquiries concerning this decision should be directed to the undersigned at (571) 272-3226.

Andrea Smith
Petitions Examiner
Office of Petitions

UNITED STATES PATENT AND TRADEMARK OFFICE

Commissioner for Patents
United States Patent and Trademark Office
P.O. Box 1450
Alexandria, VA 22313-1450
www.uspto.gov

Jackson & Co., LLP
6114 4 La Salle Avenue
Suite 507
Oakland, CA 94611-2802

COPY MAILED

SEP 1 2 2006

OFFICE OF PETITIONS

In re Application of
Kevin Loughran et al.
Application No. 11/069,798
Filed: February 28, 2005
Attorney Docket No. 4002.US

DECISION ON PETITION
TO WITHDRAW
FROM RECORD

This is a decision on the Request to Withdraw as attorney or agent of record under 37 C.F.R. § 1.36(b), filed May 19, 2006.

The request is **NOT APPROVED** as moot.

A review of the file record indicates that the power of attorney to Seong-Kung Oh and the attorneys and/or agents of the firm Jackson & Co have been revoked by the assignee of the patent application on August 1, 2006. Accordingly, the request to withdraw under 37 C.F.R. § 1.36(b) is moot.

All future communications from the Office will continue to be directed to the below-listed address until otherwise notified by applicant.

Telephone inquires concerning this decision should be directed to Terri Williams at 571-272-2991.

David Bucci
Petitions Examiner
Office of Petitions

cc: **3Com Corporation**
350 Campus Drive
Marlborough, MA 01752

UNITED STATES PATENT AND TRADEMARK OFFICE

Commissioner for Patents
United States Patent and Trademark Office
P.O. Box 1450
Alexandria, VA 22313-1450
www.uspto.gov

LINDEN, STAUFFER PATENTS
1006 MONTFORD RD.
CLEVELAND HTS. OH 44121

MAILED

FEB 17 2009

OFFICE OF PETITIONS

In re Application of
SULL, Sanghoon et al.
Application No. 11/069,830
Filed: March 01, 2005
Attorney Docket No. **VIV-5B**

DECISION ON PETITION
TO WITHDRAW
FROM RECORD

This is a decision on the Request to Withdraw as attorney or agent of record under 37 C.F.R. § 1.36(b), filed December 12, 2008.

The request is **APPROVED**.

A grantable request to withdraw as attorney/agent of record must be signed by every attorney/agent seeking to withdraw or contain a clear indication that one attorney is signing on behalf of another/others. The Office requires the practitioner(s) requesting withdrawal to certify that he, she, or they have: (1) given reasonable notice to the client, prior to the expiration of the response period, that the practitioner(s) intends to withdraw from employment; (2) delivered to the client or a duly authorized representative of the client all papers and property (including funds) to which the client is entitled; and (3) notified the client of any responses that may be due and the time frame within which the client must respond, pursuant 37 CFR 10.40(c).

The request was signed by Dwight A. Stauffer on behalf of all attorneys of record who are associated with customer No. 69186. All attorneys/agents associated have been withdrawn. Applicant is reminded that there is no attorney of record at this time.

The request to change the correspondence address of record is not acceptable as the requested correspondence address is not that of: (1) the first named signing inventor; or (2) an intervening assignee of the entire interest under 37 C.F.R 3.71. All future communications from the Office will be directed to the first named signing inventor.

The application became abandoned for failure to timely reply the Office mailed May 28, 2008.

Telephone inquiries concerning this decision should be directed to Michelle R. Eason at 571-272-4231.

Michelle R. Eason
Paralegal Specialist
Office of Petitions

cc: **SANGHOON SULL**
GAEPO 4-CHA WOOSUNG APT. 8-402
DOGOK-DONG, KANGNAM-KU
SEOUL, KOREA 135-270

cc: **JONES DAY**
222 EAST 41ST ST
NEW YORK, NY 10017

UNITED STATES PATENT AND TRADEMARK OFFICE

Commissioner for Patents
United States Patent and Trademark Office
P.O. Box 1450
Alexandria, VA 22313-1450
www.uspto.gov

E. I. DU PONT DE NEMOURS AND COMPANY
LEGAL PATENT RECORDS CENTER
BARLEY MILL PLAZA 25/1128
4417 LANCASTER PIKE
WILMINGTON, DE 19805

COPY MAILED

JUL 19 2007

OFFICE OF PETITIONS

In re Application of	:	
Janine Buseman-Williams et al	:	
Application No. 11/069,858	:	DECISION ON PETITION
Filed: February 28, 2005	:	UNDER 37 CFR 1.78(a)(6)
Attorney Docket No. CH2985USCIP	:	

This is a decision on the petition treated under 37 CFR 1.78(a)(6), filed May 7, 2007, to accept an unintentionally delayed claim under 35 U.S.C. §119(e) for the benefit of prior-filed provisional Application No. 60/501,498, filed September 8, 2003, as set forth in the concurrently filed amendment.

The petition is **GRANTED.**

A petition under 37 CFR 1.78(a)(6) is only applicable to those applications filed on or after November 29, 2000. Further, the petition is appropriate only after expiration of the period specified in 37 CFR 1.78(a)(5)(ii) and must be filed during the pendency of the nonprovisional application. In addition, the petition must be accompanied by:

(1) the reference required by 35 U.S.C. § 119(e) and 37 CFR 1.78(a)(5)(i) and (iii) to the prior-filed application, unless previously submitted;
(2) the surcharge set forth in § 1.17(t); and
(3) a statement that the entire delay between the date the claim was due under 37 CFR 1.78(a)(5)(ii) and the date the claim was filed was unintentional. The Director may require additional information where there is a question whether the delay was unintentional.

Additionally, the instant nonprovisional application must be pending at the time of filing of the reference to the prior-filed provisional application as required by 37 CFR 1.78(a)(5)(ii). Further, the nonprovisional application claiming the benefit of the prior-filed provisional application must have been filed within twelve months of the filing date of the prior-filed provisional application.

All of the above requirements having been satisfied, the late claim for benefit of priority under 35 U.S.C. § 119(e) is accepted as being unintentionally delayed.

The granting of the petition to accept the delayed benefit claim to the prior-filed application under 37 CFR 1.78(a)(6) should not be construed as meaning that this application is entitled to the benefit of the filing date of the prior-filed application. In order for this application to be entitled to the benefit of the prior-filed application, all other requirements under 35 U.S.C. §119(e) and 37 CFR 1.78(a)(4) and (a)(5) must be met. Similarly, the fact that the corrected Filing Receipt accompanying this decision on petition includes the prior-filed application should not be construed as meaning that applicant is entitled to the claim for benefit of priority to the prior-filed application noted thereon. Accordingly, the examiner will, in due course, consider this benefit claim and determine whether the application is entitled to the benefit of the earlier filing date.

The rule at 37 CFR § 1.78(a)(6) requires a statement that the entire delay between the date the claim was due under 37 CFR § 1.78(a)**(5)(ii)** and the date the claim was filed was unintentional. Since the statement appearing in the petition varies from the required language, the statement is being construed as the statement required by 37 CFR §1.78(a)(6). If this is not a correct reading of the statement appearing in the petition, petitioner should promptly notify the Office.

A corrected Filing Receipt, which includes the priority claim to the prior-filed provisional application, accompanies this decision on petition.

Any inquiries concerning this decision may be directed to the undersigned at (571) 272-3218. All other inquiries concerning either the examination procedures or status of the application should be directed to the Technology Center.

The application is being forwarded to Technology Center AU 1654 for consideration by the examiner of the claim under 35 U.S.C. §119(e) for the benefit of priority to the prior-filed provisional application.

Frances Hicks
Petitions Examiner
Office of Petitions

ATTACHMENT: Corrected Filing Receipt

UNITED STATES PATENT AND TRADEMARK OFFICE

UNITED STATES DEPARTMENT OF COMMERCE
United States Patent and Trademark Office
Address: COMMISSIONER FOR PATENTS
P.O. Box 1450
Alexandria, Virginia 22313-1450
www.uspto.gov

APPL NO.	FILING OR 371(c) DATE	ART UNIT	FIL FEE REC'D	ATTY.DOCKET NO	TOT CLMS	IND CLMS
11/069,858	02/28/2005	1654	2240	CH2985USCIP	32	1

CONFIRMATION NO. 9029

CORRECTED FILING RECEIPT

OC000000024886552

23906
E I DU PONT DE NEMOURS AND COMPANY
LEGAL PATENT RECORDS CENTER
BARLEY MILL PLAZA 25/1128
4417 LANCASTER PIKE
WILMINGTON, DE 19805

Date Mailed: 07/18/2007

Receipt is acknowledged of this nonprovisional patent application. The application will be taken up for examination in due course. Applicant will be notified as to the results of the examination. Any correspondence concerning the application must include the following identification information: the U.S. APPLICATION NUMBER, FILING DATE, NAME OF APPLICANT, and TITLE OF INVENTION. Fees transmitted by check or draft are subject to collection. Please verify the accuracy of the data presented on this receipt. **If an error is noted on this Filing Receipt, please write to the Office of Initial Patent Examination's Filing Receipt Corrections. Please provide a copy of this Filing Receipt with the changes noted thereon. If you received a "Notice to File Missing Parts" for this application, please submit any corrections to this Filing Receipt with your reply to the Notice. When the USPTO processes the reply to the Notice, the USPTO will generate another Filing Receipt incorporating the requested corrections (if appropriate).**

Applicant(s)

Janine Buseman-Williams, Greenville, DE;
Xueying Huang, Hockessin, DE;
Hong Wang, Kennett Square, PA;
Gary Ken Whiting, North East, MD;

Power of Attorney: The patent practitioners associated with Customer Number **23906**.

Domestic Priority data as claimed by applicant

This application is a CIP of 10/935,642 09/07/2004 PAT 7,220,405
which claims benefit of 60/501,498 09/08/2003

Foreign Applications

If Required, Foreign Filing License Granted: 08/03/2005

The country code and number of your priority application, to be used for filing abroad under the Paris Convention, is US11/069,858

Projected Publication Date: Not Applicable

Non-Publication Request: No

Early Publication Request: No

Title

Long lasting waterproof sunscreen comprising metal oxide and peptide conditioner

Preliminary Class

514

PROTECTING YOUR INVENTION OUTSIDE THE UNITED STATES

Since the rights granted by a U.S. patent extend only throughout the territory of the United States and have no effect in a foreign country, an inventor who wishes patent protection in another country must apply for a patent in a specific country or in regional patent offices. Applicants may wish to consider the filing of an international application under the Patent Cooperation Treaty (PCT). An international (PCT) application generally has the same effect as a regular national patent application in each PCT-member country. The PCT process **simplifies** the filing of patent applications on the same invention in member countries, but **does not result** in a grant of "an international patent" and does not eliminate the need of applicants to file additional documents and fees in countries where patent protection is desired.

Almost every country has its own patent law, and a person desiring a patent in a particular country must make an application for patent in that country in accordance with its particular laws. Since the laws of many countries differ in various respects from the patent law of the United States, applicants are advised to seek guidance from specific foreign countries to ensure that patent rights are not lost prematurely.

Applicants also are advised that in the case of inventions made in the United States, the Director of the USPTO must issue a license before applicants can apply for a patent in a foreign country. The filing of a U.S. patent application serves as a request for a foreign filing license. The application's filing receipt contains further information and guidance as to the status of applicant's license for foreign filing.

Applicants may wish to consult the USPTO booklet, "General Information Concerning Patents" (specifically, the section entitled "Treaties and Foreign Patents") for more information on timeframes and deadlines for filing foreign patent applications. The guide is available either by contacting the USPTO Contact Center at 800-786-9199, or it can be viewed on the USPTO website at http://www.uspto.gov/web/offices/pac/doc/general/index.html.

For information on preventing theft of your intellectual property (patents, trademarks and copyrights), you may wish to consult the U.S. Government website, http://www.stopfakes.gov. Part of a Department of Commerce initiative, this website includes self-help "toolkits" giving innovators guidance on how to protect intellectual property in specific countries such as China, Korea and Mexico. For questions regarding patent enforcement issues, applicants may call the U.S. Government hotline at 1-866-999-HALT (1-866-999-4158).

LICENSE FOR FOREIGN FILING UNDER
Title 35, United States Code, Section 184
Title 37, Code of Federal Regulations, 5.11 & 5.15

GRANTED

The applicant has been granted a license under 35 U.S.C. 184, if the phrase "IF REQUIRED, FOREIGN FILING LICENSE GRANTED" followed by a date appears on this form. Such licenses are issued in all applications where the conditions for issuance of a license have been met, regardless of whether or not a license may be required as set forth in 37 CFR 5.15. The scope and limitations of this license are set forth in 37 CFR 5.15(a) unless an earlier license has been issued under 37 CFR 5.15(b). The license is subject to revocation upon written notification. The

date indicated is the effective date of the license, unless an earlier license of similar scope has been granted under 37 CFR 5.13 or 5.14.

This license is to be retained by the licensee and may be used at any time on or after the effective date thereof unless it is revoked. This license is automatically transferred to any related applications(s) filed under 37 CFR 1.53(d). This license is not retroactive.

The grant of a license does not in any way lessen the responsibility of a licensee for the security of the subject matter as imposed by any Government contract or the provisions of existing laws relating to espionage and the national security or the export of technical data. Licensees should apprise themselves of current regulations especially with respect to certain countries, of other agencies, particularly the Office of Defense Trade Controls, Department of State (with respect to Arms, Munitions and Implements of War (22 CFR 121-128)); the Bureau of Industry and Security, Department of Commerce (15 CFR parts 730-774); the Office of Foreign Assets Control, Department of Treasury (31 CFR Parts 500+) and the Department of Energy.

NOT GRANTED

No license under 35 U.S.C. 184 has been granted at this time, if the phrase "IF REQUIRED, FOREIGN FILING LICENSE GRANTED" DOES NOT appear on this form. Applicant may still petition for a license under 37 CFR 5.12, if a license is desired before the expiration of 6 months from the filing date of the application. If 6 months has lapsed from the filing date of this application and the licensee has not received any indication of a secrecy order under 35 U.S.C. 181, the licensee may foreign file the application pursuant to 37 CFR 5.15(b).

UNITED STATES PATENT AND TRADEMARK OFFICE

Commissioner for Patents
United States Patent and Trademark Office
P.O. Box 1450
Alexandria, VA 22313-1450
www.uspto.gov

MAILED

JUL 22 2005

DIRECTOR'S OFFICE
TECHNOLOGY CENTER 2600

ROBERTS ABOKHAIR & MARDULA
SUITE 1000
11800 SUNRISE VALLEY DRIVE
RESTON VA 20191

In re Application of :
BEATY, ELWIN M., et al. :
Application No. 11/069,918 :
Filed: February 28, 2005 :
For: **METHOD OF MANUFACTURING ELECTRONIC COMPONENTS INCLUDING A METHOD FOR THREE DIMENSIONAL INSPECTION** :

DECISION ON PETITION
TO MAKE SPECIAL

This is a decision on the petition filed June 29, 2005 under Manual of Patent Examination Procedure §708.02,VIII requesting accelerated examination.

The petition under Manual of Patent Examination Procedure §708.02, VIII, must:
(1) be filed prior to receiving any examination by the examiner,
(2) be accompanied by the required fee- $130,
(3) the claims should be directed to a single invention (if it is determined that the claims pertain to more than one invention, then applicant will have to make an election without traverse or forfeit accelerated examination status),
(4) state that a pre-examination search was made, and fully discuss the search method employed, such as classes and subclasses searched, publications, Chemical abstracts, patents, etc. A search made by a foreign patent office satisfies this requirement,
(5) be accompanied by a copy of each of the references most closely related to the subject matter encompassed by the claims if said references are not already of record,
(6) fully discuss the references, pointing out with the particularity required by 37 C.F.R. §1.111 (b) and (c), how the claimed subject matter is patentable over the references.

The petitioner meets all the above-listed requirements. Accordingly, the petition is **GRANTED**.

The application will retain its special status throughout its entire prosecution, including any appeal to the Board of Patent Appeals and Interferences, subject only to diligent prosecution by the applicant. The application file is being forwarded to the examiner for appropriate action in due course.

Kenneth A. Wieder
Special Program Examiner
Technology Center 2600
Communications

UNITED STATES PATENT AND TRADEMARK OFFICE

UNITED STATES DEPARTMENT OF COMMERCE
United States Patent and Trademark Office
Address: COMMISSIONER FOR PATENTS
P.O. Box 1450
Alexandria, Virginia 22313-1450
www.uspto.gov

KNOBBE MARTENS OLSON & BEAR LLP
2040 MAIN STREET
FOURTEENTH FLOOR
IRVINE, CA 92614

Mail Date: 06/02/2010

Applicant	: Yan Philippe	: DECISION ON REQUEST FOR
Patent Number	: 7660744	: RECALCULATION of PATENT
Issue Date	: 02/09/2010	: TERM ADJUSTMENT IN VIEW
Application No	: 11/069,923	: OF WYETH AND NOTICE OF INTENT TO
Filed	: 03/01/2005	: ISSUE CERTIFICATE OF CORRECTION
		:

The Request for Recalculation is **GRANTED** to the extent indicated.

The patent term adjustment has been determined to be **1253** days. The USPTO will *sua sponte* issue a certificate of correction reflecting the amount of PTA days determined by the recalculation.

Prior to the issuance of the certificate of correction, the USPTO will afford patentee an opportunity to be heard and request reconsideration. Accordingly, patentee has **one month or thirty (30) days**, whichever is longer, to file a request for reconsideration of this patent term adjustment calculation. See 35 U.S.C. 154(b)(3)(B)(ii) and 37 CFR 1.322(a)(4). No extensions of time will be granted under 37 CFR 1.136.

Patentee should use document code PET.OP if electronically filing a request for reconsideration of this patent term adjustment calculation. The patentee must also include the information required by 37 CFR 1.705(b)(2) and the fee required by 37 CFR 1.18(e). If patentee does not file a timely request for reconsideration of this patent term adjustment calculation including the information required by 37 CFR 1.705(b)(2) and the fee required by 37 CFR 1.18(e), the USPTO will issue a certificate of correction reflecting the PTA determination noted above.

Patentee should be aware that in order to preserve the right to review in the United States District Court for the District of Columbia of the USPTO patent term adjustment determination, patentee must ensure that he or she also take the steps required under 35 U.S.C. 154(b)(4)(A) in a timely manner. Nothing in the request for recalculation should be construed as providing an alternative time frame for commencing a civil action under 35 U.S.C. 154(b)(4)(A).

Any questions concerning this decision should be directed to the Office of Patent Legal Administration at 571-272-7702.

UNITED STATES PATENT AND TRADEMARK OFFICE

Commissioner for Patents
United States Patent and Trademark Office
P.O. Box 1450
Alexandria, VA 22313-1450
www.uspto.gov
DIW Mar-06

NEEDLE & ROSENBERG, P.C.
SUITE 1000
999 PEACHTREE STREET
ATLANTA GA 30309-3915

COPY MAILED

MAR 3 1 2006

OFFICE OF PETITIONS

In re Application of	:	
Pfahl et al.	:	
Application No. 11/069,930	:	DECISION GRANTING PETITION
Filed: 1 March, 2005	:	
Atty Docket No. 13099.0016U3	:	

This is a decision on the petition under 37 CFR 1.182, filed on 12 September, 2005, to change the fourth named inventor's name.

The petition is **GRANTED**.

The name of the fourth inventor will be changed from "Andrea N. Fanjul" to -**Andrea Fanjul Giachino**--.

Petitioners states that the change of name occurred as a result of the fourth inventor's naturalization as a US citizen, and has presented an affidavit signed by the inventor setting forth the procedure by which the name change occurred.

It is noted that a supplemental oath or declaration must be supplied in accordance with 37 CFR 1.67 in order to change the inventor's citizenship. The citizenship will not be changed unless a supplemental oath or declaration is provided.

The inventor's name has been corrected in Office records. A corrected Filing Receipt is enclosed for petitioner's records.

The petition fee of $400.00 has been received.

The application is being referred to Technology Center Art Unit 1626 for examination in due course.

Telephone inquiries concerning this matter may be directed to the undersigned at (571) 272-3231.

Douglas I. Wood
Senior Petitions Attorney
Office of Petitions

Encl: Corrected Filing Receipt

UNITED STATES PATENT AND TRADEMARK OFFICE

UNITED STATES DEPARTMENT OF COMMERCE
United States Patent and Trademark Office
Address: COMMISSIONER FOR PATENTS
P.O. Box 1450
Alexandria, Virginia 22313-1450
www.uspto.gov

APPL NO.	FILING OR 371 (c) DATE	ART UNIT	FIL FEE REC'D	ATTY.DOCKET NO	DRAWINGS	TOT CLMS	IND CLMS
11/069,930	03/01/2005	1626	5190	13099.0016U3	17	34	7

CONFIRMATION NO. 9044

CORRECTED FILING RECEIPT

OC000000018430249

23859
NEEDLE & ROSENBERG, P.C.
SUITE 1000
999 PEACHTREE STREET
ATLANTA, GA 30309-3915

Date Mailed: 03/31/2006

Receipt is acknowledged of this regular Patent Application. It will be considered in its order and you will be notified as to the results of the examination. Be sure to provide the U.S. APPLICATION NUMBER, FILING DATE, NAME OF APPLICANT, and TITLE OF INVENTION when inquiring about this application. Fees transmitted by check or draft are subject to collection. Please verify the accuracy of the data presented on this receipt. **If an error is noted on this Filing Receipt, please mail to the Commissioner for Patents P.O. Box 1450 Alexandria Va 22313-1450. Please provide a copy of this Filing Receipt with the changes noted thereon. If you received a "Notice to File Missing Parts" for this application, please submit any corrections to this Filing Receipt with your reply to the Notice. When the USPTO processes the reply to the Notice, the USPTO will generate another Filing Receipt incorporating the requested corrections (if appropriate).**

Applicant(s)

Magnus Pfahl, Solana Beach, CA;
Catherine Tachdjian, San Diego, CA;
Hussien A. Al-Shamma, Encinitas, CA;
Andrea Fanjul Giachino, San Diego, CA;
David P.M. Pleynet, San Diego, CA;
Lyle W. Spruce, Chula Vista, CA;
Richard Fine, Ridgewood, NJ;
James W. Zapf, San Diego, CA;
Jianhua Guo, San Diego, CA;
Karine Jakubowicz-Jaillardon, San Diego, CA;

Power of Attorney: The patent practitioners associated with Customer Number **23859**.

Domestic Priority data as claimed by applicant

This application is a DIV of 10/098,184 03/08/2002
which claims benefit of 60/274,342 03/08/2001

Foreign Applications

If Required, Foreign Filing License Granted: 03/25/2005

The country code and number of your priority application, to be used for filing abroad under the Paris Convention, is
US11/069,930

Projected Publication Date: Not Applicable

Non-Publication Request: No

Early Publication Request: No

Title

RXR activating molecules

Preliminary Class

514

PROTECTING YOUR INVENTION OUTSIDE THE UNITED STATES

Since the rights granted by a U.S. patent extend only throughout the territory of the United States and have no effect in a foreign country, an inventor who wishes patent protection in another country must apply for a patent in a specific country or in regional patent offices. Applicants may wish to consider the filing of an international application under the Patent Cooperation Treaty (PCT). An international (PCT) application generally has the same effect as a regular national patent application in each PCT-member country. The PCT process **simplifies** the filing of patent applications on the same invention in member countries, but **does not result** in a grant of "an international patent" and does not eliminate the need of applicants to file additional documents and fees in countries where patent protection is desired.

Almost every country has its own patent law, and a person desiring a patent in a particular country must make an application for patent in that country in accordance with its particular laws. Since the laws of many countries differ in various respects from the patent law of the United States, applicants are advised to seek guidance from specific foreign countries to ensure that patent rights are not lost prematurely.

Applicants also are advised that in the case of inventions made in the United States, the Director of the USPTO must issue a license before applicants can apply for a patent in a foreign country. The filing of a U.S. patent application serves as a request for a foreign filing license. The application's filing receipt contains further information and guidance as to the status of applicant's license for foreign filing.

Applicants may wish to consult the USPTO booklet, "General Information Concerning Patents" (specifically, the section entitled "Treaties and Foreign Patents") for more information on timeframes and deadlines for filing foreign patent applications. The guide is available either by contacting the USPTO Contact Center at 800-786-9199, or it can be viewed on the USPTO website at http://www.uspto.gov/web/offices/pac/doc/general/index.html.

For information on preventing theft of your intellectual property (patents, trademarks and copyrights), you may wish to consult the U.S. Government website, http://www.stopfakes.gov. Part of a Department of Commerce initiative, this website includes self-help "toolkits" giving innovators guidance on how to protect intellectual property in specific countries such as China, Korea and Mexico. For questions regarding patent enforcement issues, applicants may call the U.S. Government hotline at 1-866-999-HALT (1-866-999-4158).

LICENSE FOR FOREIGN FILING UNDER
Title 35, United States Code, Section 184
Title 37, Code of Federal Regulations, 5.11 & 5.15

GRANTED

The applicant has been granted a license under 35 U.S.C. 184, if the phrase "IF REQUIRED, FOREIGN FILING LICENSE GRANTED" followed by a date appears on this form. Such licenses are issued in all applications where the conditions for issuance of a license have been met, regardless of whether or not a license may be required as set forth in 37 CFR 5.15. The scope and limitations of this license are set forth in 37 CFR 5.15(a) unless an earlier license has been issued under 37 CFR 5.15 (b). The license is subject to revocation upon written notification. The date indicated is the effective date of the license, unless an earlier license of similar scope has been granted under 37 CFR 5.13 or 5.14.

This license is to be retained by the licensee and may be used at any time on or after the effective date thereof unless it is revoked. This license is automatically transferred to any related applications(s) filed under 37 CFR 1.53(d). This license is not retroactive.

The grant of a license does not in any way lessen the responsibility of a licensee for the security of the subject matter as imposed

by any Government contract or the provisions of existing laws relating to espionage and the national security or the export of technical data. Licensees should apprise themselves of current regulations especially with respect to certain countries, of other agencies, particularly the Office of Defense Trade Controls, Department of State (with respect to Arms, Munitions and Implements of War (22 CFR 121-128)); the Bureau of Industry and Security, Department of Commerce (15 CFR parts 730-774); the Office of Foreign Assets Control, Department of Treasury (31 CFR Parts 500+) and the Department of Energy.

NOT GRANTED

No license under 35 U.S.C. 184 has been granted at this time, if the phrase "IF REQUIRED, FOREIGN FILING LICENSE GRANTED" DOES NOT appear on this form. Applicant may still petition for a license under 37 CFR 5.12, if a license is desired before the expiration of 6 months from the filing date of the application. If 6 months has lapsed from the filing date of this application and the licensee has not received any indication of a secrecy order under 35 U.S.C. 181, the licensee may foreign file the application pursuant to 37 CFR 5.15(b).

UNITED STATES PATENT AND TRADEMARK OFFICE

Commissioner for Patents
United States Patent and Trademark Office
P.O. Box 1450
Alexandria, VA 22313-1450
www.uspto.gov

Wolf Greenfield & Sacks, PC
Federal Reserve Plaza
600 Atlantic Avenue
Boston MA 02210-2211

COPY MAILED

DEC 0 9 2005

OFFICE OF PETITIONS

In re Application of	:	
Rothman, Rubin and Depetrillo	:	DECISION ACCORDING STATUS
Application No. 11/069,934	:	UNDER 37 CFR 1.47(a)
Filed: February 28, 2005	:	
Title: Device For and Method of Predicting a	:	
User's Sleep State	:	

This is in response to the petition under 37 CFR 1.47(a), filed on November 21, 2005 (certificate of mailing dated November 18, 2005). Applicant obtained an extension of time for response within the fifth month. Accordingly, the petition is timely filed.

Applicant showed that Daniel Rothman, the non-signing inventor, refused to join in the filing of the above-identified application after applicant presented him with a declaration and a copy of the application. Specifically, in the Declaration of Facts, Benjamin S. Rubin asserted that he sent Mr. Rothman a declaration and a copy of the application via email. Mr. Rubin asserted that during a subsequent telephone conversation, Mr. Rothman orally refused to sign any documents and directed applicant to correspond with his attorney, Matthew T. Oliverio. Thereafter, Mr. Rubin stated he presented Mr. Oliverio with a copy of the documents on several occasions; however, Mr. Oliverio has not responded as of the filing of the petition. Copies of the all of the correspondence accompany the petition. Accordingly, the petition is granted.

The Office reviewed the above-identified application and papers and found them in compliance with 37 CFR 1.47(a). This application is hereby accorded Rule 1.47(a) status. As provided in Rule 1.47(c), this Office will forward notice of this application's filing to the non-signing inventor at the address of his legal representative. Notice of the filing of this application will also be published in the Official Gazette. The current petition fee is $200.00. Thus, applicant's Deposit Account will be charged the difference due of $70.00.

This matter is being referred to the Office of Initial Patent Examination for further processing.

Telephone inquiries regarding this decision should be directed to the undersigned at (571) 272-3211.

Christina Tartera Donnell

Christina Tartera Donnell
Senior Petitions Attorney
Office of Petitions

UNITED STATES PATENT AND TRADEMARK OFFICE

Commissioner for Patents
United States Patent and Trademark Office
P.O. Box 1450
Alexandria, VA 22313-1450
www.uspto.gov

Matthew T. Oliverio
Oliverio & Maraccio, LLP
Re: Daniel Rothman
55 Dorrance Street, Suite 400
Providence RI 02903

COPY MAILED

DEC 0 9 2005

OFFICE OF PETITIONS

In re Application of :
Rothman, Rubin and Depetrillo :
Application No. 11/069,934 :
Filed: February 28, 2005 :
Title: DEVICE FOR AND METHOD OF :
PREDICTING A USER'S SLEEP STATE :

LETTER

Dear Mr. Rothman

You are named as a joint inventor in the above-identified United States patent application filed under the provisions of 35 U.S.C. 116 (United States Code) and 37 CFR 1.47(a), Rules of Practice in Patent Cases. Should a patent be granted on the application you will be designated therein as a joint inventor.

As a named inventor you are entitled to inspect any paper in the file wrapper of the application, order copies of all or any part thereof (at a prepaid cost per 37 CFR 1.19) or make your position of record in the application. Alternatively, you may arrange to do any of the preceding through a registered patent attorney or agent presenting written authorization from you. If you care to join the application, counsel of record (see below) would presumably assist you. Joining in the application would entail the filing of an appropriate oath or declaration by you pursuant to 37 CFR 1.63.

Requests for information regarding your application should be directed to the File Information Unit at (703) 308-2733. Information regarding how to pay for and order a copy of the application, or a specific paper in the application, should be directed to Certification Division at (703) 308-9726 or 1-800-972-6382 (outside the Washington D.C. area).

Christina T. Donnell
Christina Tartera Donnell
Senior Petitions Attorney
Office of Petitions

Wolf Greenfield & Sacks, PC
Federal Reserve Plaza
600 Atlantic Avenue
Boston MA 02210-2211

UNITED STATES PATENT AND TRADEMARK OFFICE

Commissioner for Patents
United States Patent and Trademark Office
P.O. Box 1450
Alexandria, VA 22313-1450
www.uspto.gov

ARENT FOX PLLC
1050 CONNECTICUT AVENUE, N.W.
SUITE 400
WASHINGTON DC 20036

COPY MAILED

JAN 17 2007

OFFICE OF PETITIONS

In re Application of	:
Atsusshi Hatakeyama et al	:
Application No. 11/069,940	: DECISION GRANTING PETITION
Filed: March 3, 2005	: UNDER 37 CFR 1.137(b)
Attorney Docket No. 108390-00090	:

This is a decision on the petition under 37 CFR 1.137(b), filed September 14, 2006, to revive the above-identified application.

The petition is **GRANTED**.

The petition satisfies the conditions for revival pursuant to the provisions of 37 CFR 1.137(b) in that (1) the reply in the form of an amendment and replacement drawings; (2) the petition fee; and (3) the required statement of unintentional delay have been received. Accordingly, the reply to the Notice of Allowability of April 21, 2006, is accepted as having been unintentionally delayed.

Telephone inquiries concerning this decision should be directed to the undersigned at (571) 272-3208.

This matter is being referred to Technology Center AU 2827 for the examiner to consider the Amendment under 37 CFR 1.312 and the Replacement Drawings submitted on September 14, 2006

Karen Creasy

Karen Creasy
Petitions Examiner
Office of Petitions

UNITED STATES PATENT AND TRADEMARK OFFICE

Commissioner for Patents
United States Patent and Trademark Office
P.O. Box 1450
Alexandria, VA 22313-1450
www.uspto.gov

JJGJR.: 09-07

Paper No: __

COPY MAILED

SEP 1 0 2007

OFFICE OF PETITIONS

MCGINN INTELLECTUAL
PROPERTY LAW GROUP, PLLC
8321 OLD COURTHOUSE ROAD
SUITE 200
VIENNA VA 22182-3817

In re Application of	:	
Nariai.	:	DECISION
Application No.: 11/069,947	:	
Filing Date: 3 March, 2005	:	
Attorney Docket No. NEC04010US	:	

This is a decision on the petition filed on 18 January, 2007, and considered as a request to withdraw the holding of abandonment under 37 C.F.R. §1.181.

The Office regrets the delay in addressing this matter, however, the instant petition was presented to the attorneys in the Office of Petitions only at this writing.[1]

The petition as considered under 37 C.F.R. §1.181 is **GRANTED**.

---

[1] **NOTE: Monitoring of the status of applications on PAIR can inform one's management of application responses and provide an indication when mailings of Office actions should be expected. Status Inquiries filed at three (3) or four (4) month intervals provide a demonstration of diligence and attention in supporting a petition seeking relief under 37 C.F.R. §1.181.**

BACKGROUND

The record reflects that: [1]

- the Examiner mailed a Restriction requirement on19 September, 2006, with reply due absent extension of time on or before 19 October, 2006;

- Petitioner failed to reply timely and properly, to that Restriction requirement and the application went abandoned by operation of law after midnight 19 October, 2006;

- it does not appear that the Office mailed a Notice of Abandonment before the instant petition was filed;

- on 18 January, 2007, Petitioner filed the instant petition with, *inter alia*, an averment that the 19 September, 2007, Restriction requirement never was received by Petitioner's office, and to this purpose Petitioner provides the statement of his docketing manager (Ms. Gibb) and copies of his office documents including a hand-written listing and the docketing page for 19 October, 2006, as well as other possible due dates;

- while the statements do not include those of the persons doing the work, nor is there an indication that files with the common 19 October, 2006, due dates were checked to ensure the Office action in question was not placed into an incorrect file, it appears that Petitioner has satisfied the limited requirements under the regulation.

The MPEP Commentary (excerpted below) is illustrative, not all-inclusive, and clearly envisions an environment in which one or two individuals handle the processes discussed. Here, as occurs in larger offices, the duties are spread out across several persons (including as here at least one or more persons who open/process incoming mail, one or more docketing manager(s) controlling oversight, several secretaries/assistants/paralegals and several registered practitioners).

Petitioner is to be commended for responding to the Restriction requirement in question before the end of the full statutory period.

However, contrary to Petitioner's assertion that Office error resulted in the Restriction requirement not being received, the record at this writing is devoid of such a definitive showing (i.e., a demonstration that the Office error produced non-receipt of the Restriction requirement)–rather, the record at this point evidences only that a reply was not docketed in Petitioner's Office and this may have been due to Petitioner's non-receipt of the Restriction requirement.

Whatever the historic reason for the finger-pointing/blame-assignment related to requests to withdraw the holding of abandonment, the availability of applications and application papers

online to applicants/practitioners who diligently associate their Customer Number with the respective application(s) most certainly obviates the lack of awareness by an applicant/practitioner as to events/transactions in an application. If one wishes to know the progress in and/or status of an application, one need only look at the file online.

This process indeed may be the manner in which Petitioner ultimately arrived at awareness in this matter–having not had benefit of a timely docketing in his office records.

Out of an abundance of caution, Petitioners always are reminded that the filing of a petition under 37 C.F.R. §1.181 does not toll any periods that may be running any action by the Office and a petition seeking relief under the regulation must be filed within two (2) months of the act complained of (see: 37 C.F.R. §1.181(f)); and those registered to practice *and* all others who make representations before the Office must inquire into the underlying facts of representations made to the Office and support averments with the appropriate documentation–since all owe to the Office the continuing duty to disclose.[2]

---

[2] See supplement of 17 June, 1999. The Patent and Trademark Office is relying on petitioner's duty of candor and good faith and accepting a statement made by Petitioner. See Changes to Patent Practice and Procedure, 62 Fed. Reg. at 53160 and 53178, 1203 Off. Gaz. Pat. Office at 88 and 103 (responses to comments 64 and 109)(applicant obligated under 37 C.F.R. §10.18 to inquire into the underlying facts and circumstances when providing statements to the Patent and Trademark Office).

Specifically, the regulations at 37 C.F.R. §10.18 provide:

§ 10.18 Signature and certificate for correspondence filed in the Patent and Trademark Office.
(a) For all documents filed in the Office in patent, trademark, and other non-patent matters, except for correspondence that is required to be signed by the applicant or party, each piece of correspondence filed by a practitioner in the Patent and Trademark Office must bear a signature by such practitioner complying with the provisions of §1.4(d), §1.4(e), or § 2.193(c)(1) of this chapter.
(b) By presenting to the Office (whether by signing, filing, submitting, or later advocating) any paper, the party presenting such paper, whether a practitioner or non-practitioner, is certifying that—

(1) All statements made therein of the party's own knowledge are true, all statements made therein on information and belief are believed to be true, and all statements made therein are made with the knowledge that whoever, in any matter within the jurisdiction of the Patent and Trademark Office, knowingly and willfully falsifies, conceals, or covers up by any trick, scheme, or device a material fact, or makes any false, fictitious or fraudulent statements or representations, or makes or uses any false writing or document knowing the same to contain any false, fictitious or fraudulent statement or entry, shall be subject to the penalties set forth under 18 U.S.C. 1001, and that violations of this paragraph may jeopardize the validity of the application or document, or the validity or enforceability of any patent, trademark registration, or certificate resulting therefrom; and

(2) To the best of the party's knowledge, information and belief, formed after an inquiry reasonable under the circumstances, that —

(i) The paper is not being presented for any improper purpose, such as to harass someone or to cause unnecessary delay or needless increase in the cost of prosecution before the Office;

(ii) The claims and other legal contentions therein are warranted by existing law or by a nonfrivolous argument for the extension, modification, or reversal of existing law or the establishment of new law;

(iii) The allegations and other factual contentions have evidentiary support or, if specifically so identified, are likely to have evidentiary support after a reasonable opportunity for further investigation or discovery; and

(iv) The denials of factual contentions are warranted on the evidence, or if specifically so identified, are reasonably based on a lack of information or belief.

(c) Violations of paragraph (b)(1) of this section by a practitioner or non-practitioner may jeopardize the validity of the application or document, or the validity or enforceability of any patent, trademark registration, or certificate resulting therefrom. Violations of any of paragraphs (b)(2)(i) through (iv) of this section are, after notice and reasonable opportunity to respond, subject to such sanctions as deemed appropriate by the Commissioner, or the Commissioner's designee, which may include, but are not limited to, any combination of —

(1) Holding certain facts to have been established;
(2) Returning papers;
(3) Precluding a party from filing a paper, or presenting or contesting an issue;
(4) Imposing a monetary sanction;
(5) Requiring a terminal disclaimer for the period of the delay; or

STATUTES, REGULATIONS AND ANALYSIS

Congress has authorized the Commissioner to "revive an application if the delay is shown to the satisfaction of the Commissioner to have been "unavoidable." 35 U.S.C. §133 (1994).[3]

The regulations at 37 C.F.R. §1.137(a) and (b) set forth the requirements for a petitioner to revive a previously unavoidably or unintentionally, respectively, abandoned application under this congressional grant of authority. The language of 35 U.S.C. §133 and 37 C.F.R. §1.137(a) is clear, unambiguous, and without qualification: the delay in tendering the reply to the outstanding Office action, as well as filing the first petition seeking revival, must have been unavoidable for the reply now to be accepted on petition.[4]

Delays in responding properly raise the question whether delays are unavoidable.[5] Where there is a question whether the delay was unavoidable, Petitioners must meet the burden of establishing that the delay was unavoidable within the meaning of 35 U.S.C. §133 and 37 C.F.R. §1.137(a).[6]

And the Petitioner must be diligent in attending to the matter.[7] Failure to do so does not constitute the care required under Pratt, and so cannot satisfy the test for diligence and due care.

(By contrast, unintentional delays are those that do not satisfy the very strict statutory and regulatory requirements of unavoidable delay, and also, by definition, are not intentional.[8]))

---

(6) Terminating the proceedings in the Patent and Trademark Office.
(d) Any practitioner violating the provisions of this section may also be subject to disciplinary action. See § 10.23(c)(15).
[Added 50 FR 5175, Feb. 6, 1985, effective Mar. 8, 1985; para. (a) revised, 58 FR 54494, Oct. 22, 1993, effective Nov. 22, 1993; paras. (a) & (b) revised, paras. (c) & (d) added, 62 FR 53131, Oct. 10, 1997, effective Dec. 1, 1997; para. (a) revised, 69 FR 56481, Sept. 21, 2004, effective Oct. 21, 2004]

[3] 35 U.S.C. §133 provides:
35 U.S.C. §133 Time for prosecuting application.
Upon failure of the applicant to prosecute the application within six months after any action therein, of which notice has been given or mailed to the applicant, or within such shorter time, not less than thirty days, as fixed by the Commissioner in such action, the application shall be regarded as abandoned by the parties thereto, unless it be shown to the satisfaction of the Commissioner that such delay was unavoidable.

[4] Therefore, by example, an unavoidable delay in the payment of the Filing Fee might occur if a reply is shipped by the US Postal Service, but due to catastrophic accident, the delivery is not made.

[5] See: *Changes to Patent Practice and Procedure*; *Final Rule Notice*, 62 *Fed. Reg.* at 53158-59 (October 10, 1997), 1203 *Off. Gaz. Pat. Office* at 86-87 (October 21, 1997).

[6] See: In re Application of G, 11 USPQ2d 1378, 1380 (Comm'r Pats. 1989).

[7] See: Diligence in Filing Petitions to Revive and Petitions to Withdraw the Holding of Abandonment, 1124 Off. Gaz. Pat. Office 33 (March 19, 1991). It was and is Petitioner's burden to exercise diligence in seeking either to have the holding of abandonment withdrawn or the application revived. See 1124 Off. Gaz. Pat. Office supra.

[8] Therefore, by example, an unintentional delay in the reply might occur if the reply and transmittal form are to be prepared for shipment by the US Postal Service, but other pressing matters distract one's attention and the mail is not timely deposited for shipment.

Allegations as to the Request to
Withdraw the Holding of Abandonment

The courts have determined the construct for properly supporting a petition seeking withdrawal of a holding of abandonment.[9]

The commentary at MPEP §711.03(c) provides:

* * *

A. Petition To Withdraw Holding of Abandonment Based on Failure To Receive Office Action

In *Delgar v. Schulyer*, 172 USPQ 513 (D.D.C. 1971), the court decided that the Office should mail a new Notice of Allowance in view of the evidence presented in support of the contention that the applicant's representative did not receive the original Notice of Allowance. Under the reasoning of *Delgar*, an allegation that an Office action was never received may be considered in a petition to withdraw the holding of abandonment. If adequately supported, the Office may grant the petition to withdraw the holding of abandonment and remail the Office action. That is, the reasoning of *Delgar* is applicable regardless of whether an application is held abandoned for failure to timely pay the issue fee (35 U.S.C. 151) or for failure to prosecute (35 U.S.C. 133). To minimize costs and burdens to practitioners and the Office, the Office has modified the showing required to establish nonreceipt of an Office action. The showing required to establish nonreceipt of an Office communication must include a statement from the practitioner stating that the Office communication was not received by the practitioner and attesting to the fact that a search of the file jacket and docket records indicates that the Office communication was not received. A copy of the docket record where the nonreceived Office communication would have been entered had it been received and docketed must be attached to and referenced in practitioner's statement. For example, if a three month period for reply was set in the nonreceived Office action, a copy of the docket report showing all replies docketed for a date three months from the mail date of the nonreceived Office action must be submitted as documentary proof of nonreceipt of the Office action.

* **

The showing outlined above may not be sufficient if there are circumstances that point to a conclusion that the Office action may have been lost after receipt rather than a conclusion that the Office action was lost in the mail (e.g., if the

[9] See: Delgar v. Schulyer, 172 USPQ 513 (D.D.C. 1971).

practitioner has a history of not receiving Office actions).

Evidence of nonreceipt of an Office communication or action (e.g., Notice of Abandonment or an advisory action) other than that action to which reply was required to avoid abandonment would not warrant withdrawal of the holding of abandonment. Abandonment takes place by operation of law for failure to reply to an Office action or timely pay the issue fee, not by operation of the mailing of a Notice of Abandonment. See *Lorenz v. Finkl*, 333 F.2d 885, 889-90, 142 USPQ 26, 29-30 (CCPA 1964); *Krahn v. Commissioner*, 15 USPQ2d 1823, 1824 (E.D. Va 1990); *In re Application of Fischer*, 6 USPQ2d 1573, 1574 (Comm'r Pat. 1988). (Emphasis supplied.)

* * *

Moreover, the regulation places upon Petitioner a diligence requirement to seek relief within two (2) months of the act complained of.

It appears that Petitioner has satisfied the showing as discussed above.

CONCLUSION

The petition as considered under 37 C.F.R. §1.181 is **granted**, there is no Notice of Abandonment to be vacated, and Petitioner's fee for extension is refunded.

The instant application is released to Technology Center 2100 for further processing, including the re-mailing of the Restriction requirement with a new period of reply, in due course.

While telephone inquiries regarding this decision may be directed to the undersigned at (571) 272-3214, it is noted that all practice before the Office is in writing (see: 37 C.F.R. §1.2[10]) and the proper authority for action on any matter in this regard are the statutes (35 U.S.C.), regulations (37 C.F.R.) and the commentary on policy (MPEP). Therefore, no telephone discussion may be controlling or considered authority for Petitioner's action(s).

John J. Gillon, Jr.
Senior Attorney
Office of Petitions

[10] The regulations at 37 C.F.R. §1.2 provide:
§1.2 Business to be transacted in writing.
All business with the Patent and Trademark Office should be transacted in writing.The personal attendance of applicants or their attorneys or agents at the Patent and Trademark Office is unnecessary. The action of the Patent and Trademark Office will be based exclusively on the written record in the Office. No attention will be paid to any alleged oral promise, stipulation,or understanding in relation to which there is disagreement or doubt.

PBS01/2788/US

IN THE UNITED STATES PATENT & TRADEMARK OFFICE

Patent Examining Operations

Patent Application

11/069968

Inventors: MUIR, Iain and BARRETT, Fiona Elizabeth

Title: **FILTRATION AND PLUG DRAIN DEVICE FOR CONTAINING OIL AND CHEMICAL SPILLS**

Filed: Herewith 3-3-05

Priority: Claiming the benefit of U.S. 60/562,242, filed 15 April 2004

Attny Dckt: 033629-002

Examiner: Unknown Cintins Art Unit: Unknown 1724

To: The Commissioner for Patents
United States Patent and Trademark Office
P.O. Box 1450
Alexandria, VA 22313-1450

Dear Sir:

PETITION TO MAKE SPECIAL UNDER 37 CFR 1.102(c)

Applicants request that this application be made "special" and advanced for examination on the basis that the first-named inventor, Iain Muir, is more than 65 years of age.

PETITION GRANTED

Richard Crispino
Special Program Examiner
Technology Center 1700
MAY 25 2005

UNITED STATES PATENT AND TRADEMARK OFFICE

UNITED STATES DEPARTMENT OF COMMERCE
United States Patent and Trademark Office
Address: COMMISSIONER FOR PATENTS
P.O. Box 1450
Alexandria, Virginia 22313-1450
www.uspto.gov

QUALCOMM INCORPORATED
5775 MOREHOUSE DR.
SAN DIEGO, CA 92121

Mail Date: 05/10/2010

Applicant	: Richard Gerard Hofmann	: DECISION ON REQUEST FOR
Patent Number	: 7617343	: RECALCULATION of PATENT
Issue Date	: 11/10/2009	: TERM ADJUSTMENT IN VIEW
Application No	: 11/070,016	: OF WYETH AND NOTICE OF INTENT TO
Filed	: 03/02/2005	: ISSUE CERTIFICATE OF CORRECTION
		:

The Request for Recalculation is **GRANTED** to the extent indicated.

The patent term adjustment has been determined to be **940** days. The USPTO will *sua sponte* issue a certificate of correction reflecting the amount of PTA days determined by the recalculation.

Prior to the issuance of the certificate of correction, the USPTO will afford patentee an opportunity to be heard and request reconsideration. Accordingly, patentee has **one month or thirty (30) days**, whichever is longer, to file a request for reconsideration of this patent term adjustment calculation. See 35 U.S.C. 154(b)(3)(B)(ii) and 37 CFR 1.322(a)(4). No extensions of time will be granted under 37 CFR 1.136.

Patentee should use document code PET.OP if electronically filing a request for reconsideration of this patent term adjustment calculation. The patentee must also include the information required by 37 CFR 1.705(b)(2) and the fee required by 37 CFR 1.18(e). If patentee does not file a timely request for reconsideration of this patent term adjustment calculation including the information required by 37 CFR 1.705(b)(2) and the fee required by 37 CFR 1.18(e), the USPTO will issue a certificate of correction reflecting the PTA determination noted above.

Patentee should be aware that in order to preserve the right to review in the United States District Court for the District of Columbia of the USPTO patent term adjustment determination, patentee must ensure that he or she also take the steps required under 35 U.S.C. 154(b)(4)(A) in a timely manner. Nothing in the request for recalculation should be construed as providing an alternative time frame for commencing a civil action under 35 U.S.C. 154(b)(4)(A).

Any questions concerning this decision should be directed to the Office of Patent Legal Administration at 571-272-7702.

UNITED STATES PATENT AND TRADEMARK OFFICE

Commissioner for Patents
United States Patent and Trademark Office
P.O. Box 1450
Alexandria, VA 22313-1450
www.uspto.gov

LOUIS J. WILLE
BRISTOL-MYERS SQUIBB COMPANY
PATENT DEPARTMENT
P O BOX 4000
PRINCETON NJ 08543-4000

MAILED

MAR 02 2010

OFFICE OF PETITIONS

In re Application of
James J. Li et al.
Application No. 11/070,025
Filed: March 2, 2005
Attorney Docket No. 10202USNP

DECISION ON APPLICATION
FOR PATENT TERM ADJUSTMENT

This is a decision on the "APPLICATION FOR RECONSIDERATION OF PATENT TERM ADJUSTMENT PERIOD UNDER 1.705(b)" filed September 16, 2009. Applicants request that the initial determination of patent term adjustment under 35 U.S.C. 154(b) be corrected from zero (0) to two hundred sixty-six (266) days.

The petition to correct the patent term adjustment indicated on the above-identified patent to indicate that the term of the above-identified patent is extended or adjusted by two hundred sixty-six (266) days is **GRANTED to the extent indicated herein**.

The Office has updated the PAIR screen to reflect that the correct Patent Term Adjustment (PTA) determination at the time of the mailing of the Notice of Allowance is two hundred sixty-six **(266)** days. A copy of the updated PAIR screen, showing the correct determination, is enclosed.

On July 31, 2009, the Office mailed the Determination of Patent Term Adjustment under 35 U.S.C. 154(b) in the above-identified application. The Notice stated that the patent term adjustment (PTA) to date is zero days. On September 16, 2009, applicants timely[1] submitted an application for patent term adjustment (with required fee), asserting that the correct number of days of PTA at the time of the mailing of the Notice of Allowance is two hundred sixty-six (266) days.

The Office initially determined a patent term adjustment of zero (0) days based on an adjustment for PTO delay of three hundred fifty-two (352) days pursuant to 35 U.S.C. 154(b)(1)(A)(i) and 37 C.F.R. § 1.703(a)(1) reduced by applicants' delay of two hundred eighty (280) twenty-four (24) and sixty-two (62) days for a total three hundred sixty-six

[1] PALM records indicate that the Issue Fee was received in the Office on October 27, 2009.

days applicant delay, pursuant to 35 U.S.C. 154(b)(2)(C)(ii) and 37 C.F.R. § 1.704(b). The adjustment of 352 days is at issue and the reduction of two hundred eighty (280) days of applicant delay is at issue.

While applicant provides no basis for their argument that for the mailing of the Restriction Requirement on April 16, 2007, 706 days instead of 352 days should be accorded for PTO delay, a review of the record supports a conclusion that the calculation of 352 days is found to be correct.

Nonetheless, a review of the record reveals that the initial determination of patent term adjustment of 0 days is incorrect As to the reduction of 280 days attributed to applicant for the response to the Notice to File Missing Parts mailed May 5, 2005, a response was incorrectly listed as having been filed on May 15, 2006 instead of the receipt date of May 15, 2005. Thus, instead of a 280 day total reduction for applicant delay pursuant to 37 C.F.R. §1.704(b), zero days should have been accorded for applicant delay. Applicants specifically state that the patent issuing from the application is not subject to a terminal disclaimer.

In view thereof, the determination of Patent Term Adjustment at the time of the mailing of the notice of allowance should have been 266 days (352 PTO delay - 86 days Applicant delay), rather than 0 days listed on the notice of allowance.

The Office of Data Management has been advised of this decision. The application is, thereby, forwarded to the Office of Data Management for issuance of the application. The patent term adjustment indicated on the patent (as shown on the Issue Notification mailed about three weeks prior to patent issuance) will include any additional adjustment accrued both for Office delay in issuing the patent more than four months after payment of the issue fee and satisfaction of all outstanding requirements, and for the Office taking in excess of three years to issue the patent (to the extent that the three-year period does not overlap with periods already accorded).

Telephone inquiries specific to this decision should be directed to Senior Petitions Attorney Patricia Faison-Ball at (571) 272-3212.

/Kery A. Fries/

Kery A. Fries
Senior Legal Advisor
Office of Patent Legal Administration
Office of Associate Commissioner
for Examination Policy

Enclosure: Copy of Revised PTA calculation

PALM INTRANET

Day : Monday
Date: 3/1/2010
Time: 06:00:41

PTA Calculations for Application: 11/070025			
Application Filing Date:	03/02/2005	PTO Delay (PTO):	352
Issue Date of Patent:		Three Years:	0
Pre-Issue Petitions:	0	Applicant Delay (APPL):	366
Post-Issue Petitions:	0	Total PTA (days):	266
PTO Delay Adjustment:	280		

File Contents History

Number	Date	Contents Description	PTO	APPL	START
99	02/28/2010	ADJUSTMENT OF PTA CALCULATION BY PTO	280		
88	07/31/2009	MAIL NOTICE OF ALLOWANCE			
87	07/29/2009	ISSUE REVISION COMPLETED			
86	07/29/2009	DOCUMENT VERIFICATION			
85	07/29/2009	NOTICE OF ALLOWANCE DATA VERIFICATION COMPLETED			
84	07/29/2009	CASE DOCKETED TO EXAMINER IN GAU			
83	07/28/2009	EXAMINER'S AMENDMENT COMMUNICATION			
82	07/28/2009	NOTICE OF ALLOWABILITY			
75	07/24/2009	EMAIL NOTIFICATION			
71	07/24/2009	CHANGE IN POWER OF ATTORNEY (MAY INCLUDE ASSOCIATE POA)			
70	07/21/2009	DATE FORWARDED TO EXAMINER			
69	07/20/2009	AMENDMENT AFTER FINAL REJECTION			
68	07/17/2009	CORRESPONDENCE ADDRESS CHANGE			
67	06/02/2009	MAIL FINAL REJECTION (PTOL - 326)			
66	06/02/2009	FINAL REJECTION			
65	03/18/2009	INFORMATION DISCLOSURE STATEMENT CONSIDERED			
64	05/14/2009	CHANGE IN POWER OF ATTORNEY (MAY INCLUDE ASSOCIATE POA)			
63	05/11/2009	CORRESPONDENCE ADDRESS CHANGE			
62	03/18/2009	REFERENCE CAPTURE ON IDS			
61	03/18/2009	INFORMATION DISCLOSURE STATEMENT (IDS) FILED		0	59
60	03/31/2009	DATE FORWARDED TO EXAMINER			
59	03/18/2009	RESPONSE AFTER NON-FINAL ACTION			
58	03/18/2009	INFORMATION DISCLOSURE STATEMENT (IDS)			

		FILED			
57	12/23/2008	MAIL NON-FINAL REJECTION			
56	12/19/2008	NON-FINAL REJECTION			
55	10/24/2008	CHANGE IN POWER OF ATTORNEY (MAY INCLUDE ASSOCIATE POA)			
54	10/23/2008	DATE FORWARDED TO EXAMINER			
53	10/09/2008	AMENDMENT SUBMITTED/ENTERED WITH FILING OF CPA/RCE			
52	10/23/2008	DATE FORWARDED TO EXAMINER			
51	10/08/2008	REQUEST FOR CONTINUED EXAMINATION (RCE)			
50	10/23/2008	DISPOSAL FOR A RCE / CPA / R129			
49	10/09/2008	REQUEST FOR EXTENSION OF TIME - GRANTED			
48	10/20/2008	CORRESPONDENCE ADDRESS CHANGE			
47	10/09/2008	WORKFLOW - REQUEST FOR RCE - BEGIN			
46	05/06/2008	MAIL EXAMINER INTERVIEW SUMMARY (PTOL - 413)			
45	05/06/2008	MAIL ADVISORY ACTION (PTOL - 303)			
44	05/06/2008	ADVISORY ACTION (PTOL-303)			
43	04/29/2008	EXAMINER INTERVIEW SUMMARY RECORD (PTOL - 413)			
42	04/10/2008	NOTICE OF APPEAL FILED			
41	04/10/2008	DATE FORWARDED TO EXAMINER			
40	03/31/2008	AMENDMENT AFTER FINAL REJECTION			
39	03/17/2008	MAIL ADVISORY ACTION (PTOL - 303)			
38	03/11/2008	ADVISORY ACTION (PTOL-303)			
37	01/07/2008	INFORMATION DISCLOSURE STATEMENT CONSIDERED			
36	01/07/2008	INFORMATION DISCLOSURE STATEMENT CONSIDERED			
35	03/06/2008	DATE FORWARDED TO EXAMINER			
34	02/27/2008	AMENDMENT AFTER FINAL REJECTION			
33	01/07/2008	ELECTRONIC INFORMATION DISCLOSURE STATEMENT		62	26
32	01/10/2008	MAIL FINAL REJECTION (PTOL - 326)			
31	01/07/2008	INFORMATION DISCLOSURE STATEMENT (IDS) FILED			
30	01/07/2008	INFORMATION DISCLOSURE STATEMENT (IDS) FILED			

29	01/07/2008	FINAL REJECTION			
28	11/14/2007	CHANGE IN POWER OF ATTORNEY (MAY INCLUDE ASSOCIATE POA)			
27	11/08/2007	DATE FORWARDED TO EXAMINER			
26	11/06/2007	RESPONSE AFTER NON-FINAL ACTION		24	23
25	11/06/2007	REQUEST FOR EXTENSION OF TIME - GRANTED			
24	11/02/2007	CORRESPONDENCE ADDRESS CHANGE			
23	07/13/2007	MAIL NON-FINAL REJECTION			
22	07/11/2007	NON-FINAL REJECTION			
21	07/28/2005	INFORMATION DISCLOSURE STATEMENT CONSIDERED			
20	05/09/2007	DATE FORWARDED TO EXAMINER			
19	05/08/2007	RESPONSE TO ELECTION / RESTRICTION FILED			
18	04/19/2007	MAIL RESTRICTION REQUIREMENT	352		-1
17	04/16/2007	REQUIREMENT FOR RESTRICTION / ELECTION			
16	03/31/2007	CASE DOCKETED TO EXAMINER IN GAU			
15	01/04/2007	PG-PUB ISSUE NOTIFICATION			
14	10/04/2006	IFW TSS PROCESSING BY TECH CENTER COMPLETE			
13	07/28/2005	REFERENCE CAPTURE ON IDS			
12.7	07/28/2005	INFORMATION DISCLOSURE STATEMENT (IDS) FILED			
12	07/28/2005	INFORMATION DISCLOSURE STATEMENT (IDS) FILED			
11	09/27/2006	APPLICATION RETURN FROM OIPE			
10	09/27/2006	APPLICATION RETURN TO OIPE			
9	09/27/2006	APPLICATION DISPATCHED FROM OIPE			
8	09/27/2006	APPLICATION IS NOW COMPLETE			
7	05/12/2006	ADDITIONAL APPLICATION FILING FEES		280	5
6	05/12/2006	A STATEMENT BY ONE OR MORE INVENTORS SATISFYING THE REQUIREMENT UNDER 35 USC 115, OATH OF THE APPLIC			
5	05/05/2005	NOTICE MAILED--APPLICATION INCOMPLETE--FILING DATE ASSIGNED			
4	04/26/2005	CLEARED BY L&R (LARS)			
3	03/24/2005	REFERRED TO LEVEL 2 (LARS) BY OIPE CSR			
2	03/19/2005	IFW SCAN & PACR AUTO SECURITY REVIEW			
1	03/02/2005	INITIAL EXAM TEAM NN			

Search Another: Application# [ ] Search

EXPLANATION OF PTA CALCULATION

EXPLANATION OF PTE CALCULATION

To go back, right click here and select Back. To go forward, right click here and select Forward. To refresh, right click here and select Refresh.

Back to OASIS | Home page

UNITED STATES PATENT AND TRADEMARK OFFICE

Commissioner for Patents
United States Patent and Trademark Office
P.O. Box 1450
Alexandria, VA 22313-1450
www.uspto.gov

TEXAS INSTRUMENTS INCORPORATED
P O BOX 655474, M/S 3999
DALLAS TX 75265

COPY MAILED

APR 2 4 2008

OFFICE OF PETITIONS

In re Application of	:
Patel et al.	:
Application No. 11/070,036	: DECISION GRANTING PETITION
Filed: March 1, 2005	: UNDER 37 CFR 1.78(a)(3) AND
Attorney Docket No. TI-63009	: UNDER 37 CFR 1.78(a)(6)

This is a decision on the petitions under 37 CFR §§ 1.78(a)(3) and 1.78(a)(6), filed March 26, 2008, to accept an unintentionally delayed claim under 35 U.S.C. §§120 and 119(e) for the benefit of the prior-filed applications set forth in the concurrently filed amendment.

The petitions are **GRANTED**.

A petition for acceptance of a claim for late priority under 37 CFR §§ 1.78(a)(3) and 1.78(a)(6) is only applicable to those applications filed on or after November 29, 2000. Further, the petition is appropriate only after the expiration of the period specified in 37 CFR §§ 1.78(a)(2)(ii) and 1.78(a)(5)(ii). In addition, the petition under 37 CFR §§ 1.78(a)(3) and 1.78(a)(6) must be accompanied by:

(1) the reference required by 35 U.S.C. §§ 120 and 119(e) and 37 CFR §§ 1.78(a)(2)(i) and 1.78(a)(5)(i) of the prior-filed application, unless previously submitted;
(2) the surcharge set forth in § 1.17(t); and
(3) a statement that the entire delay between the date the claim was due under 37 CFR §§ 1.78(a)(2)(ii) and 1.78(a)(5)(ii) and the date the claim was filed was unintentional. The Commissioner may require additional where there is a question whether the delay was unintentional.

The instant application was filed on March 1, 2005 and was pending at the time of filing of the instant petition. A reference to the prior-filed applications has been included in an amendment to the first sentence of the specification following the title, as required by 37 CFR §§ 1.78(a)(2)(iii) and 1.78(a)(5)(iii).

The instant nonprovisional application was filed after November 29, 2000, and the claim for priority herein is submitted after expiration of the period specified in 37 CFR §§ 1.78(a)(2)(ii) and 1.78(a)(5)(ii). *See* 35 U.S.C. § 120 and § 119(e). Accordingly, having found that the instant petition satisfies the conditions of 37 CFR §§ 1.78(a)(3) and 1.78(a)(6) for acceptance of an unintentionally delayed claim for priority under 35 U.S.C. § 120 and § 119(e), the petition to accept an unintentionally delayed claim of benefit to the prior-filed applications is granted.

The granting of the petition to accept the delayed benefit claim to the prior-filed applications under 37 CFR §§ 1.78(a)(3) and 1.78(a)(6) should <u>not</u> be construed as meaning that the

instant application is entitled to the benefit of the filing date of the prior-filed applications. In order for the instant application to be entitled to the benefit of the prior-filed applications, all other requirements under 35 U.S.C. §120 and 1.78(a)(1) and (a)(2) and under 35 U.S.C. §119(e) and 37 CFR 1.78(a)(4) and (a)(5) must be met. Similarly, the fact that the corrected Filing Receipt accompanying this decision on petition includes the prior-filed applications should not be construed as meaning that applicant is entitled to the claim for benefit of priority to the prior-filed applications noted thereon. Accordingly, the examiner will, in due course, consider this benefit claim and determine whether the instant application is entitled to the benefit of the earlier filing date.

A corrected Filing Receipt, which includes the priority claim to the prior-filed applications, accompanies this decision on petition.

Any questions concerning this matter may be directed to the undersigned at (571) 272-3206.

This matter is being referred to Technology Center Art Unit 2814 for appropriate action on the amendment submitted March 26, 2008, including consideration by the examiner of the claim under 35 U.S.C. § 120 and 37 CFR 1.78(a)(2) for the benefit of the prior-filed applications, and for consideration of the claim under 35 U.S.C. §119(e) and 37 CFR 1.78(a)(5) for the benefit of the prior-filed provisional application.

Liana Walsh
Petitions Examiner
Office of Petitions

ATTACHMENT: Corrected Filing Receipt

UNITED STATES PATENT AND TRADEMARK OFFICE

UNITED STATES DEPARTMENT OF COMMERCE
United States Patent and Trademark Office
Address: COMMISSIONER FOR PATENTS
P.O. Box 1450
Alexandria, Virginia 22313-1450
www.uspto.gov

APPLICATION NUMBER	FILING or 371(c) DATE	GRP ART UNIT	FIL FEE REC'D	ATTY.DOCKET.NO	TOT CLAIMS	IND CLAIMS
11/070,036	03/01/2005	2814	1725	TI-63009	69	2

CONFIRMATION NO. 5063

CORRECTED FILING RECEIPT

23494
TEXAS INSTRUMENTS INCORPORATED
P O BOX 655474, M/S 3999
DALLAS, TX 75265

OC000000029521481

Date Mailed: 04/23/2008

Receipt is acknowledged of this non-provisional patent application. The application will be taken up for examination in due course. Applicant will be notified as to the results of the examination. Any correspondence concerning the application must include the following identification information: the U.S. APPLICATION NUMBER, FILING DATE, NAME OF APPLICANT, and TITLE OF INVENTION. Fees transmitted by check or draft are subject to collection. Please verify the accuracy of the data presented on this receipt. **If an error is noted on this Filing Receipt, please write to the Office of Initial Patent Examination's Filing Receipt Corrections. Please provide a copy of this Filing Receipt with the changes noted thereon. If you received a "Notice to File Missing Parts" for this application, please submit any corrections to this Filing Receipt with your reply to the Notice. When the USPTO processes the reply to the Notice, the USPTO will generate another Filing Receipt incorporating the requested corrections**

Applicant(s)

Satyadev R. Patel, Elk Grove, CA;
Andrew G. Huibers, Mountain View, CA;
Steve S. Chiang, Saratoga, CA;

Power of Attorney: The patent practitioners associated with Customer Number 23494

Domestic Priority data as claimed by applicant

This application is a CON of 10/005,308 12/03/2001 PAT 6,969,635
which claims benefit of 60/254,043 12/07/2000
and claims benefit of 60/276,222 03/15/2001
This application 11/070,036
is a CIP of 10/343,307 01/29/2003 PAT 6,962,419
which is a 371 of PCT/US01/24332 08/03/2001 *
which is a CIP of 09/631,536 08/03/2000 PAT 6,529,310
which is a CIP of 09/437,586 11/09/1999 PAT 6,172,797
which is a CON of 09/160,361 09/24/1998 PAT 6,046,840
and said PCT/US01/24332 08/03/2001
is a CIP of 09/732,445 12/07/2000 PAT 6,523,961
which claims benefit of 60/229,246 08/30/2000
(*)Data provided by applicant is not consistent with PTO records.

Foreign Applications

If Required, Foreign Filing License Granted: 03/23/2005

The country code and number of your priority application, to be used for filing abroad under the Paris Convention, is **US 11/070,036**

Projected Publication Date: Not Applicable

Non-Publication Request: No

Early Publication Request: No
**** SMALL ENTITY ****
Title

Methods for depositing, releasing and packaging microelectromechanical devices on wafer substrates

Preliminary Class

257

PROTECTING YOUR INVENTION OUTSIDE THE UNITED STATES

Since the rights granted by a U.S. patent extend only throughout the territory of the United States and have no effect in a foreign country, an inventor who wishes patent protection in another country must apply for a patent in a specific country or in regional patent offices. Applicants may wish to consider the filing of an international application under the Patent Cooperation Treaty (PCT). An international (PCT) application generally has the same effect as a regular national patent application in each PCT-member country. The PCT process **simplifies** the filing of patent applications on the same invention in member countries, but **does not result** in a grant of "an international patent" and does not eliminate the need of applicants to file additional documents and fees in countries where patent protection is desired.

Almost every country has its own patent law, and a person desiring a patent in a particular country must make an application for patent in that country in accordance with its particular laws. Since the laws of many countries differ in various respects from the patent law of the United States, applicants are advised to seek guidance from specific foreign countries to ensure that patent rights are not lost prematurely.

Applicants also are advised that in the case of inventions made in the United States, the Director of the USPTO must issue a license before applicants can apply for a patent in a foreign country. The filing of a U.S. patent application serves as a request for a foreign filing license. The application's filing receipt contains further information and guidance as to the status of applicant's license for foreign filing.

Applicants may wish to consult the USPTO booklet, "General Information Concerning Patents" (specifically, the section entitled "Treaties and Foreign Patents") for more information on timeframes and deadlines for filing foreign patent applications. The guide is available either by contacting the USPTO Contact Center at 800-786-9199, or it can be viewed on the USPTO website at http://www.uspto.gov/web/offices/pac/doc/general/index.html.

For information on preventing theft of your intellectual property (patents, trademarks and copyrights), you may wish to consult the U.S. Government website, http://www.stopfakes.gov. Part of a Department of Commerce initiative, this website includes self-help "toolkits" giving innovators guidance on how to protect intellectual property in specific countries such as China, Korea and Mexico. For questions regarding patent enforcement issues, applicants may call the U.S. Government hotline at 1-866-999-HALT (1-866-999-4158).

LICENSE FOR FOREIGN FILING UNDER

Title 35, United States Code, Section 184

Title 37, Code of Federal Regulations, 5.11 & 5.15

GRANTED

The applicant has been granted a license under 35 U.S.C. 184, if the phrase "IF REQUIRED, FOREIGN FILING LICENSE GRANTED" followed by a date appears on this form. Such licenses are issued in all applications where the conditions for issuance of a license have been met, regardless of whether or not a license may be required as set forth in 37 CFR 5.15. The scope and limitations of this license are set forth in 37 CFR 5.15(a) unless an earlier license has been issued under 37 CFR 5.15(b). The license is subject to revocation upon written notification. The date indicated is the effective date of the license, unless an earlier license of similar scope has been granted under 37 CFR 5.13 or 5.14.

This license is to be retained by the licensee and may be used at any time on or after the effective date thereof unless it is revoked. This license is automatically transferred to any related applications(s) filed under 37 CFR 1.53(d). This license is not retroactive.

The grant of a license does not in any way lessen the responsibility of a licensee for the security of the subject matter as imposed by any Government contract or the provisions of existing laws relating to espionage and the national security or the export of technical data. Licensees should apprise themselves of current regulations especially with respect to certain countries, of other agencies, particularly the Office of Defense Trade Controls, Department of State (with respect to Arms, Munitions and Implements of War (22 CFR 121-128)); the Bureau of Industry and Security, Department of Commerce (15 CFR parts 730-774); the Office of Foreign AssetsControl, Department of Treasury (31 CFR Parts 500+) and the Department of Energy.

NOT GRANTED

No license under 35 U.S.C. 184 has been granted at this time, if the phrase "IF REQUIRED, FOREIGN FILING LICENSE GRANTED" DOES NOT appear on this form. Applicant may still petition for a license under 37 CFR 5.12, if a license is desired before the expiration of 6 months from the filing date of the application. If 6 months has lapsed from the filing date of this application and the licensee has not received any indication of a secrecy order under 35 U.S.C. 181, the licensee may foreign file the application pursuant to 37 CFR 5.15(b).

UNITED STATES PATENT AND TRADEMARK OFFICE

Commissioner for Patents
United States Patent and Trademark Office
P.O. Box 1450
Alexandria, VA 22313-1450
www.uspto.gov

KEITH R. DERRINGTON
BRACEWELL & GUILIANI LLP
P.O. BOX 61389
Houston TX 77002-2781

MAILED

JUL 20 2009

OFFICE OF PETITIONS

In re Application of	:	
Xio-Ming Tang et al.	:	
Application No. 11/070,037	:	DECISION ON PETITION
Filed: March 2, 2005	:	
Attorney Docket No. 424-39547 US (102.86)	:	

This is a decision on the petition under the unintentional provisions of 37 CFR 1.137(b), filed May 29, 2009, to revive the above-identified application.

The petition is **GRANTED**.

The application became abandoned for failure to reply in a timely manner to the non-final Office action mailed, November 13, 2008, which set a shortened statutory period for reply of three (3) months. No extensions of time under the provisions of 37 CFR 1.136(a) were obtained. Accordingly, the application became abandoned on February 14, 2009.

The petition satisfies the requirements of 37 CFR 1.137(b) in that petitioner has supplied (1) the reply in the form of an amendment, (2) the petition fee of $1,620, and (3) a proper statement of unintentional delay.

37 CFR 1.137(b)(3) requires a statement that "the entire delay in filing the required reply from the due date for the reply until the filing of a grantable petition pursuant to 37 CFR 1.137(b) was unintentional." Since the statement appearing in the petition varies from the language required by 37 CFR 1.137(b)(3), the statement is being construed as the required statement. Petitioner must notify the Office if this is **not** a correct reading of the statement appearing in the petition.

The application file does not indicate a change of address has been filed in this case, although the address given on the petition differs from the address of record. A change of address should be filed in this case in accordance with MPEP 601.03. A courtesy copy of this decision is being mailed to the address noted on the petition. However, until otherwise instructed, all future correspondence regarding this application will be mailed solely to the address of record

Telephone inquiries concerning this decision should be directed to JoAnne Burke at (571) 272-4584.

This application is being referred to Technology Center AU 3663 for appropriate action by the Examiner in the normal course of business on the reply received.

Ramesh Krishnamurthy

Ramesh Krishnamurthy
Petitions Examiner
Office of Petitions

cc: Keith R. Derrington
BRACEWELL & GIULIANI LLP
P.O. BOX 61389
Houston, TX 77208-1389

UNITED STATES PATENT AND TRADEMARK OFFICE

Commissioner for Patents
United States Patent and Trademark Office
P.O. Box 1450
Alexandria, VA 22313-1450
www.uspto.gov

VENTURE PACIFIC LAW, PC
5201 GREAT AMERICA PARKWAY, SUITE 270
SANTA CLARA, CA 95054

MAILED

MAR 16 2009

OFFICE OF PETITIONS

In re Application of	:	
Jinsong Zhao	:	
Application No. 11/070,050	:	ON PETITION
Filed: March 1, 2005	:	
Attorney Docket No. Lorentz-01	:	

This is a decision on the petition under the unintentional provisions of 37 CFR 1.137(b), filed February 13, 2009, to revive the above-identified application.

The petition is **GRANTED.**

The application became abandoned for failure to timely file a reply within the meaning of 37 CFR 1.113 to the final Office action of August 22, 2007. The proposed reply required for consideration of a petition to revive must be a Notice of Appeal (and appeal fee required by 37 CFR 41.20(b)(2), an amendment that prima facie places the application in condition for allowance, a Request for Continued Examination and submission (37 CFR 1.114), or the filing of a continuing application under 37 CFR 1.53(b). See MPEP 711.03(c)(III)(A)(2). No extension of time pursuant to the provisions of 37 CFR 1.136(a) was obtained. Accordingly, the date of abandonment of this application is November 23, 2007.

The petition satisfies the requirements of 37 CFR 1.137(b) in that petitioner has supplied (1) the reply in the form of a Request for Continued Examination (RCE) and fee of $405 and the submission required by 37 CFR 1.114; (2) the petition fee of $810; and (3) a proper statement of unintentional delay.

Telephone inquiries concerning this decision should be directed to the undersigned at (571) 272-3210.

This application is being referred to Technology Center AU 2129 for processing of the RCE and for appropriate action by the Examiner in the normal course of business on the amendment submitted in accordance with 37 CFR 1.114.

Irvin Dingle
Petition Examiner
Office of Petitions

UNITED STATES PATENT AND TRADEMARK OFFICE

Commissioner for Patents
United States Patent and Trademark Office
P.O. Box 1450
Alexandria, VA 22313-1450
www.uspto.gov

IBM CORPORATION
INTELLECTUAL PROPERTY LAW
11501 BURNET ROAD
AUSTIN TX 78758

COPY MAILED

DEC 16 2009

OFFICE OF PETITIONS

In re Application of Thomas M. BREY, et al Application No. 11/070,053 Filed: March 2, 2005 Attorney Docket No. AUS920050130US1(4107)	: : : : :	DECISION ON PETITION

This is a decision on the petition under the unintentional provisions of 37 CFR 1.137(b), filed October 15, 2009, to revive the above-identified application.

The petition is **GRANTED**.

The application became abandoned for failure to timely pay the issue and publication fees on or before October 9, 2009. As required by the Notice of Allowance and Fee(s) Due, mailed July 9, 2009, which set a statutory period for reply of three (3) months. Accordingly, the application became abandoned on October 10, 2009.

The petition satisfies the requirements of 37 CFR 1.137(b) in that petitioner has supplied (1) the reply in the form of payment of the Issue Fee of $1510 and Publication Fee of $300; (2) the petition fee of $1620; and (3) the required statement of unintentional delay.

The amendment filed with the petition on October 15, 2009, has been approved by Examiner Benjamin Lanier.

The application file does not indicate a change of address has been filed in this case, although the address given on the petition differs from the address of record. A change of address should be filed in this case in accordance with MPEP 601.03. A courtesy copy of this decision is being mailed to the address noted on the petition. However, until otherwise instructed, all future correspondence regarding this application will be mailed solely to the address of record.

Telephone inquiries concerning this decision should be directed to the undersigned at (571) 272-6735.
The application is being referred to the Office of Data Management for processing into a patent.

/Diane C. Goodwyn/
Diane C. Goodwyn
Petitions Examiner
Office of Petitions

cc: JEFFREY S. SCHUBERT
SCHUBERT OSTERRIEDER
& NICKELSON PLLC
6013 CANNON MTN. DR.,
AUSTIN, TX 78749

UNITED STATES PATENT AND TRADEMARK OFFICE

UNITED STATES DEPARTMENT OF COMMERCE
United States Patent and Trademark Office
Address: COMMISSIONER FOR PATENTS
P.O. Box 1450
Alexandria, Virginia 22313-1450
www.uspto.gov

IBM CORPORATION
INTELLECTUAL PROPERTY LAW
11501 BURNET ROAD
AUSTIN, TX 78758

Mail Date: 04/20/2010

Applicant	: Thomas M. Brey	: DECISION ON REQUEST FOR
Patent Number	: 7657945	: RECALCULATION of PATENT
Issue Date	: 02/02/2010	: TERM ADJUSTMENT IN VIEW
Appliction No	: 11/070,053	: OF WYETH AND NOTICE OF INTENT TO
Filed	: 03/02/2005	: ISSUE CERTIFICATE OF CORRECTION
		:

The Request for Recalculation is **GRANTED** to the extent indicated.

The patent term adjustment has been determined to be **1186** days. The USPTO will *sua sponte* issue a certificate of correction reflecting the amount of PTA days determined by the recalculation.

Prior to the issuance of the certificate of correction, the USPTO will afford patentee an opportunity to be heard and request reconsideration. Accordingly, patentee has **one month or thirty (30) days**, whichever is longer, to file a request for reconsideration of this patent term adjustment calculation. See 35 U.S.C. 154(b)(3)(B)(ii) and 37 CFR 1.322(a)(4). No extensions of time will be granted under 37 CFR 1.136.

Patentee should use document code PET.OP if electronically filing a request for reconsideration of this patent term adjustment calculation. The patentee must also include the information required by 37 CFR 1.705(b)(2) and the fee required by 37 CFR 1.18(e). If patentee does not file a timely request for reconsideration of this patent term adjustment calculation including the information required by 37 CFR 1.705(b)(2) and the fee required by 37 CFR 1.18(e), the USPTO will issue a certificate of correction reflecting the PTA determination noted above.

Patentee should be aware that in order to preserve the right to review in the United States District Court for the District of Columbia of the USPTO patent term adjustment determination, patentee must ensure that he or she also take the steps required under 35 U.S.C. 154(b)(4)(A) in a timely manner. Nothing in the request for recalculation should be construed as providing an alternative time frame for commencing a civil action under 35 U.S.C. 154(b)(4)(A).

Any questions concerning this decision should be directed to the Office of Patent Legal Administration at 571-272-7702.

UNITED STATES PATENT AND TRADEMARK OFFICE

UNITED STATES DEPARTMENT OF COMMERCE
United States Patent and Trademark Office
Address: COMMISSIONER FOR PATENTS
P.O. Box 1450
Alexandria, Virginia 22313-1450
www.uspto.gov

IBM CORPORATION
INTELLECTUAL PROPERTY LAW
11501 BURNET ROAD
AUSTIN, TX 78758

Mail Date: 05/17/2010

Applicant : Thomas M. Brey
Patent Number : 7657945
Issue Date : 02/02/2010
Application No : 11/070,053
Filed : 03/02/2005

: NOTICE CONCERNING IMPROPER
: CALCULATION OF PATENT TERM
: ADJUSTMENT BASED UPON USPTO
: IMPROPERLY MEASURING REDUCTION
: PERIOD UNDER 37 CFR 1.704(c)(10).

The United States Patent and Trademark Office (USPTO) discovered that in processing the recent recalculation decisions mailed in response to patentee's filed Request for Recalculation of Patent Term Adjustment in view of Wyeth, the USPTO improperly measured the reduction period for reductions under 37 CFR 1.704(c)(10). Pursuant to 37 CFR 1.704(c)(10), patentee's reduction begins on the date of filing the amendment under 37 CFR 1.312 ("1.312 amendment") or other related paper and ends on the date that the Office mails a response to the filing of the 1.312 amendment or other paper. It has been discovered that during the recalculation, the calculation failed to the limit the reduction to the mail date of the response to the 1.312 amendment or other paper. Accordingly, patentee's reductions were greater than warranted.

This notice **VACATES** the previous GRANTED request for recalculation and provides patentee with a revised GRANTED recalculation.

The patent term adjustment has been determined to be **1214** days. The USPTO will *sua sponte* issue a certificate of correction reflecting the amount of patent term adjustment (PTA) days determined by the recalculation.

Prior to the issuance of the certificate of correction, the USPTO will afford patentee an opportunity to be heard and request reconsideration. Accordingly, patentee has **one month or thirty (30) days** from the mail date of this notice, whichever is longer, to file a request for reconsideration of this PTA calculation. See 35 U.S.C. § 154(b)(3)(B)(ii) and 37 CFR 1.322(a)(4).

Patentee should use document code PET.OP if electronically filing a request for reconsideration of this PTA calculation. The patentee must also include the information required by 37 CFR 1.705(b)(2), and the fee required by 37 CFR 1.18(e). If patentee does not file a timely request for reconsideration of this PTA calculation, including the information required by 37 CFR 1.705(b)(2) and the fee required by 37 CFR 1.18(e), the USPTO will issue a certificate of correction reflecting the PTA determination noted above.

Patentee should be aware that in order to preserve the right of review of the USPTO's PTA determination in the United States District Court for the District of Columbia, patentee must ensure that the steps required under 35 U.S.C. § 154 (b)(4) are taken in a timely manner. Nothing in the request for recalculation should be construed as providing an alternative time frame for commencing a civil action under 35 U.S.C. § 154(b)(4).

DATE 10-2-07 APPLICATION NUMBER 11/070060

DOC CODE Rel Dec Pubs DOC DATE ~~10/3/07~~ 10/4/07

DELIVER THE ATTACHED FIFLE/DOCUMENT TO THE TC SCANNING CENTER

CONTRACTOR: THE ATTACHED FILE/DOCUMENT MUST BE INDEXED AND SCANNED INTO IFW WITHIN **8** WORK HOURS; UPLOADING OF THE SCANNED IMAGES SHOULD OCCUR NO LATER THAN **16** WORK HOURS FOLLOWING RECEIPT OF THIS REQUEST

AFTER SCANNING, ORIGINAL DOCUMENTS SHOULD BE BOXED IN ACCORDANCE WITH INSTRUCTIONS

UNITED STATES PATENT AND TRADEMARK OFFICE

Commissioner for Patents
United States Patent and Trademark Office
P.O. Box 1450
Alexandria, VA 22313-1450
www.uspto.gov

IBM CORPORATION
PO BOX 12195
DEPT YXSA, BLDG 002
RESEARCH TRIANGLE PARK NC 27709

COPY MAILED

OCT 04 2007

OFFICE OF PETITIONS

In re Application of :
Jean Louis Calvignac et al :
Application No. 11/070,060 : DECISION ON PETITION
Filed: March 2, 2005 :
Attorney Docket No. :
RPS920040191US1(4092)

This is a decision on the petition under 37 CFR 1.137(b), filed August 27, 2007, to revive the above-identified application.

The petition is **GRANTED**.

This application became abandoned for failure to timely pay the issue and publication fees on or before August 15, 2007, as required by the Notice of Allowance and Fee(s) Due, mailed May 15, 2007. Accordingly, the date of abandonment of this application is August 16, 2007. A Notice of Abandonment was mailed on August 31, 2007, subsequent to the filing of the present petition to revive.

The petition satisfies the requirements of 37 CFR 1.137(b) in that petitioner has supplied (1) the reply in the form of payment of the issue fee of $1,400 and the publication fee of $300, (2) the petition fee of $1,500, and (3) a proper statement of unintentional delay. Accordingly, the issue and publication fees are accepted as being unintentionally delayed.

The application file does not indicate a change of address has been filed in this case, although the address given on the petition differs from the address of record. A change of address should be filed in this case in accordance with MPEP 601.03. A courtesy copy of this decision is being mailed to the address noted on the petition. However, until otherwise instructed, all future correspondence regarding this application will be mailed solely to the address of record.

Telephone inquiries concerning this decision should be directed to the undersigned at (571) 272-3218.

This application is being referred to Publishing Division for appropriate processing in accordance with this decision on petition.

Frances Hicks
Petitions Examiner
Office of Petitions

cc:

Patrick Stellitano
Schubert Osterrieder & Nickelson PLLC
6013 Cannon Mtn. Drive
Austin, TX 78749

UNITED STATES PATENT AND TRADEMARK OFFICE

Commissioner for Patents
United States Patent and Trademark Office
P.O. Box 1450
Alexandria, VA 22313-1450
www.uspto.gov

KNOBBE, MARTENS, OLSON & BEAR, LLP
2040 MAIN STREET
FOURTEENTH FLOOR
IRVINE CA 92614

COPY MAILED

JUL 1 5 2005

OFFICE OF PETITIONS

In re Application of	:
Mohamed K. Diab, et al.	: DECISION ON PETITION
Application No.: 11/070,081	: UNDER 37 CFR 1.183
Filed: March 2, 2005	: SEEKING WAIVER OF
For: Signal Processing Apparatus	: REQUIREMENTS UNDER
Attorney Docket No. MASIMO.7CP1C13	: 37 CFR 1.98 and 1.52

This is a response to a petition under 37 CFR 1.183 mailed on June 15, 2005, concurrently with an Information Disclosure Statement (IDS) in the above referenced application. The § 1.183 petition requests waiver of the rules for Information Disclosure Statements under 37 CFR 1.98. The petition under 37 CFR 1.183, is requesting relief from the § 1.98 and § 1.52 provisions which require filing a paper copy of each reference cited in an IDS. The request for waiver is made in view of the need to file the same IDS copies in multiple applications relating to different aspects of a particular invention. A paper copy of the references was filed in application no. 10/779,033 on June 2, 2005.

The petition under 37 CFR 1.183 requesting relief to file a single paper copy of IDS references is **GRANTED** to the extent set forth below.

The instant application filed under 35 U.S.C. 111 is one of 12 U.S. applications related to patent families in litigation. The references cited in the IDS are references arising from the litigation.

Applicants' submission of an IDS is taken as an attempt to comply with 37 CFR 1.56(b)(1) that requires disclosure to the Office of information material to patentability, which includes information that "establishes, by itself or in combination with other information, a prima facie case of unpatentability of a claim...." Such disclosure can be made by an IDS in the manner prescribed by 37 CFR 1.97 and 1.98.

37 CFR 1.98 requires that any IDS provide a copy of all patents, publications or other information submitted under 37 CFR 1.97 for consideration by the Office. All papers filed in an application are required to be in paper by 37 CFR 1.52(a) unless they are under filed under some other provision of the rules or a waiver of the rules. 37 CFR 1.97 notes that information disclosure statements are considered in regard to the application in which they are filed. See also MPEP § 609 (8th Ed. Rev. 2, May 2004), pages 600-122 and 600-123.

Applicants note that the instant application is one of 12 applications that are part of patent families or claim benefit of a parent patent in the same litigation.

Rather than be required to submit, via a paper copy, five boxes of foreign patent and non-patent literature references in each of 12 applications, Applicants seek to have:

(1) The earlier filed single paper copy in application no. 10/779,033 of each IDS citation fulfill the requirement for a paper copy in all 12 applications;

(2) One application (application no. 10/779,033) identified as a "holding" application which would contain one complete set of paper copies of references; the paper copies of the references to be submitted in only the "holding" application; and

(3) The other related pending U.S. applications (the "bulk filing" applications), be exempt from requiring a separately filed paper set of the references; the bulk filing applications will contain other information, e.g., a copy of the decision on petition permitting such procedure, and a copy of the Form 1449 (or equivalent). The Office may choose at its option to provide electronic access or provide a copy of each reference in the "bulk filing" applications.

A review of Office records indicates that the instant application and the '033 application are both Image File Wrapper (IFW) applications. Also, since the '033 application has been published all the copies of the references in IFW are readily available to the public. Accordingly, the Office can provide an image copy of all of the IDS references from the holding application to the instant application.

Applicants' set of petitions appears to contain typographical errors noted below; while none of these errors affect the merit of any of the petitions, Applicants are requested to correct their records so as to prevent further confusion. First, the petition for application no. 09/111,604 is erroneously captioned as "09/110,604." Additionally, each petition incorrectly cites application no. 10/677,050 as "10/667,050" and incorrectly cites application no. 11/003,231 as "11/003,321."

Decision: 37 CFR 1.183 provides relief for extraordinary situations, when justice requires suspension of any requirement of the regulations which is not a requirement of the statutes. The instant petition urges that not only would applicants be spared the necessity of submitting duplicative paper copies of foreign patent and non-patent literature references in 12 applications, but also the Office would benefit from not having to handle and store the duplicative sets of

copies. While there may be some negative effects from the Office's point of view in terms of making the copies available in different applications from one paper copy, on balance, there is seen to be sufficient benefit to justify waiver in this instance for all the applications filed.

Accordingly, the petition under 37 CFR 1.183 is granted to the extent indicated and under the terms and conditions as are set forth below. Once past the initial IDS submission, the petition does not propose the waiver to apply to updates and no waiver is granted for updates of the IDS.

The § 1.98(a)(2) requirement for (the submission of) a copy of each foreign patent and non-patent literature IDS citation in a bulk filing application will be waived in the bulk filing applications only for non-patent literature and foreign patents provided that the following five conditions are complied with:

1) One paper copy of each foreign patent and non-patent literature IDS citation has been submitted to the Office in the concurrently filed IDS in the holding application.

2) The information cited in each of the bulk filing applications is or has also been cited in the holding application.

Note: Applicants are not required to cite in each bulk filing application every item of information that is cited in the holding application. Items should be cited in each bulk filing application on the basis of relevancy and materiality to the particular claims in the bulk filing application and what each piece of information teaches.

Also note: A waiver is not granted (for the requirement to supply a paper copy of an IDS citation in another bulk filing application) where the citation is not, or has not been, made in the holding application.

3) Explanatory information related to a particular citation, such as the concise explanation of a foreign language reference under § 1.98(a)(2), if submitted in the holding application, must also be supplied in each bulk filing application where the citation is made.

4) The Office accepts and specifically reserves the right to terminate the waiver grant in regard to § 1.98(a)(2) without provision of reasons. In such event, a two month period will be given where paper copies would have to be supplied in all applications where new citations are made. Should a termination of the waiver be desired by the Office, the Office will provide written notice to the correspondence address of record. Termination by applicants may be by returning to compliance with § 1.98(a)(2) without formal notice thereof and no transition/continuing period after termination is required.

5) There will be no waiver of any aspects of 37 CFR 1.97 in any application after allowance or final rejection of that application.

Any correspondence with respect to this matter should be addressed as follows:

By mail: Mail Stop Petition
Commissioner for Patents
P.O. Box 1450
Alexandria, Virginia 22313-1450

By FAX: (571) 273-8300
Attn: Office Patent Legal Administration/Samuel Broda

Telephone inquiries should be directed to Samuel Broda at (571) 272-7711.

Samuel Broda for

Robert J. Spar
Director
Office of Patent Legal Administration
Office of the Deputy Commissioner
for Patent Examination Policy

UNITED STATES PATENT AND TRADEMARK OFFICE

Commissioner for Patents
United States Patent and Trademark Office
P.O. Box 1450
Alexandria, VA 22313-1450
www.uspto.gov

JUN 0 1 2006

John M. Grover
KNOBBE MARTENS OLSON & BEAR LLP
2040 MAIN STREET
FOURTEENTH FLOOR
IRVINE CA 92614

In re Application of: DAIB et al.	:
Appl. No.: 11/070,081	: DECISION ON PETITION
Filed: March 2, 2005	: Under 37 CFR 1.59
For: SIGNAL PROCESSING APPARATUS	:

This is a response to the petition under 37 CFR 1.59(b), filed on December 19, 2005 by which petitioners request to expunge information from the above identified application.

The decision on the petition is will be held in abeyance until prosecution on the merits is closed, at which time the petition will be decided.

Petitioner requests that the information submitted in the Information Disclosure Statement, filed December 19, 2005 be expunged from the record. Petitioner states that either (A) that the information contains trade secret material, proprietary material and/or material that is subject to a protective order which has not been made public; or (B) that the information submitted was unintentionally submitted and the failure to obtain its return would cause irreparable harm to the party who submitted the information or to the party in interest on whose behalf the information was submitted, and the information has not otherwise been made public. The petition fee set forth in 37 CFR 1.17(g) has been paid.

The decision on the petition is held in abeyance because prosecution on the merits is not closed. Accordingly, it is not appropriate to make a final determination of whether or not the material requested to be expunged is "material", with "materiality" being defined as any information which the examiner considers as being important to a determination of patentability of the claims. Thus, the decision on the petition to expunge must be held in abeyance at this time.

During prosecution on the merits, the examiner will determine whether or not the identified document is considered to be "material". If the information is not considered by the examiner to be material, the information will be returned to the applicant.

The document in question will not be available to the public during prosecution.

Frederick R. Schmidt, Director
Technology center 3700

UNITED STATES PATENT AND TRADEMARK OFFICE

Commissioner for Patents
United States Patent and Trademark Office
P.O. Box 1450
Alexandria, VA 22313-1450
www.uspto.gov

CERMAK & KENEALY LLP
ACS LLC
515 EAST BRADDOCK ROAD
SUITE B
ALEXANDRIA VA 22314

COPY MAILED

NOV 28 2007

OFFICE OF PETITIONS

In re Application of	:	
Tagaki et al.	:	
Application No.: 11/070084	:	DECISION ON
Filing or 371(c) Date: 03/03/2005	:	PETITION
Attorney Docket Number: US-214	:	

This is a decision in response to the Petition to Withdraw Holding of Abandonment, filed January 9, 2006, and the Renewed Petition to Withdraw Holding of Abandonment, filed October 19, 2007. The delay in treating this petition is regretted.

This Petition is hereby **granted**.

Background

The above-identified application became abandoned for failure to timely and properly reply to the Notice to File Missing parts of Nonprovisional Application ("Notice"), mailed April 21, 2005. The Notice set a two (2) month period for reply. Extensions of time were available under 37 CFR 1.136(a). No timely reply having been received, the application became abandoned on June 22, 2005. A Notice of Abandonment was mailed January 6, 2006.

The present petition

Applicant files the present petition and asserts that a timely reply to the Office action was timely filed on June 14, 2005. In support of this assertion, Applicant provides a copy of the reply, and a copy of an Auto-Reply Facsimile Transmission which includes a copy of the Fax Coversheet, and acknowledges receipt by this Office of the reply. The Fax Coversheet also includes a Certificate of Transmission dated June 14, 2005.

Conclusion

In view of the foregoing, the petition is granted. The holding of abandonment is hereby withdrawn.

No petition fee has been charged and none is due. The late filing oath or declaration surcharge has been charged to Petitioner's deposit account.

The application will be referred to the Office of Patent Application Processing for processing of the copy of the reply filed January 9, 2006.

Telephone inquiries concerning this matter should be directed to the undersigned at (571) 272-3232.

Derek L. Woods
Attorney
Office of Petitions

UNITED STATES PATENT AND TRADEMARK OFFICE

Commissioner for Patents
United States Patent and Trademark Office
P.O. Box 1450
Alexandria, VA 22313-1450
www.uspto.gov

DON J. PELTO
1300 I STREET, NW
11TH FLOOR
WASHINGTON DC 20006

COPY MAILED

OCT 05 2007

OFFICE OF PETITIONS

In re Application of	:	
Joseph T. Ambrefe Jr.	:	
Application No. 11/070,094	:	DECISION GRANTING PETITION
Filed: March 3, 2005	:	UNDER 37 CFR 1.313(c)(2)
Attorney Docket No. 14RC-129594	:	

This is a decision on the petition under 37 CFR 1.313(c)(2), filed October 4, 2007, to withdraw the above-identified application from issue after payment of the issue fee.

The petition is **GRANTED**.

The above-identified application is withdrawn from issue for consideration of a submission under 37 CFR 1.114 (request for continued examination). *See* 37 CFR 1.313(c)(2).

Petitioner is advised that the issue fee paid on August 7, 2007 cannot be refunded. If, however, this application is again allowed, petitioner may request that it be applied towards the issue fee required by the new Notice of Allowance.[1]

Telephone inquiries should be directed to the undersigned at (571) 272-3208.

This application is being referred to Technology Center AU 2612 for processing of the request for continued examination under 37 CFR 1.114 and for consideration of the concurrently filed IDS.

Karen Creasy

Karen Creasy
Petitions Examiner
Office of Petitions

---

[1] *The request to apply the issue fee to the new Notice may be satisfied by completing and returning the new Part B – Fee(s) Transmittal Form (along with any balance due at the time of submission). Petitioner is advised that the Issue Fee Transmittal Form* ***must*** *be completed and timely submitted to avoid abandonment of the application.*

UNITED STATES PATENT AND TRADEMARK OFFICE

UNITED STATES DEPARTMENT OF COMMERCE
United States Patent and Trademark Office
Address: COMMISSIONER FOR PATENTS
P.O. Box 1450
Alexandria, Virginia 22313-1450
www.uspto.gov

MCANDREWS HELD & MALLOY, LTD
500 WEST MADISON STREET
SUITE 3400
CHICAGO, IL 60661

Mail Date: 04/30/2010

Applicant	: Benjamin D. Novatzky	: DECISION ON REQUEST FOR
Patent Number	: 7634121	: RECALCULATION of PATENT
Issue Date	: 12/15/2009	: TERM ADJUSTMENT IN VIEW
Application No	: 11/070,104	: OF WYETH AND NOTICE OF INTENT TO
Filed	: 03/01/2005	: ISSUE CERTIFICATE OF CORRECTION
		:

The Request for Recalculation is **GRANTED** to the extent indicated.

The patent term adjustment has been determined to be **1106** days. The USPTO will *sua sponte* issue a certificate of correction reflecting the amount of PTA days determined by the recalculation.

Prior to the issuance of the certificate of correction, the USPTO will afford patentee an opportunity to be heard and request reconsideration. Accordingly, patentee has **one month or thirty (30) days**, whichever is longer, to file a request for reconsideration of this patent term adjustment calculation. See 35 U.S.C. 154(b)(3)(B)(ii) and 37 CFR 1.322(a)(4). No extensions of time will be granted under 37 CFR 1.136.

Patentee should use document code PET.OP if electronically filing a request for reconsideration of this patent term adjustment calculation. The patentee must also include the information required by 37 CFR 1.705(b)(2) and the fee required by 37 CFR 1.18(e). If patentee does not file a timely request for reconsideration of this patent term adjustment calculation including the information required by 37 CFR 1.705(b)(2) and the fee required by 37 CFR 1.18(e), the USPTO will issue a certificate of correction reflecting the PTA determination noted above.

Patentee should be aware that in order to preserve the right to review in the United States District Court for the District of Columbia of the USPTO patent term adjustment determination, patentee must ensure that he or she also take the steps required under 35 U.S.C. 154(b)(4)(A) in a timely manner. Nothing in the request for recalculation should be construed as providing an alternative time frame for commencing a civil action under 35 U.S.C. 154(b)(4)(A).

Any questions concerning this decision should be directed to the Office of Patent Legal Administration at 571-272-7702.

SPE RESPONSE FOR CERTIFICATE OF CORRECTION

Paper No.: —

DATE : 5/18/09

TO SPE OF : ART UNIT 3672

SUBJECT : Request for Certificate of Correction for Appl. No.: 11/070114 Patent No.: 7510002 B2

Please respond to this request for a certificate of correction within 7 days.

FOR IFW FILES:

Please review the requested changes/corrections as shown in the **COCIN** document(s) in the IFW application image. No new matter should be introduced, nor should the scope or meaning of the claims be changed.

Please complete the response (see below) and forward the completed response to scanning using document code **COCX**.

FOR PAPER FILES:

Please review the requested changes/corrections as shown in the attached certificate of correction. Please complete this form (see below) and forward it with the file to:

Certificates of Correction Branch (C of C)
Randolph Square 9D62-B
Palm Location 7580

Virginia Tolbert
Certificates of Correction Branch
703-756-1591

Thank You For Your Assistance

The request for issuing the above-identified correction(s) is hereby:
Note your decision on the appropriate box.

- ☒ **Approved** — **All** changes apply.
- ☐ **Approved in Part** — Specify below which changes **do not** apply.
- ☐ **Denied** — State the reasons for denial below.

Comments: _____

DAVID BAGNELL
SUPERVISORY PATENT EXAMINER
TECHNOLOGY CENTER 3600
SPE

3672
Art Unit

UNITED STATES PATENT AND TRADEMARK OFFICE

Commissioner for Patents
United States Patent and Trademark Office
P.O. Box 1450
Alexandria, VA 22313-1450
www.uspto.gov

EDWARD D. MANZO
COOK, ALEX, MCFARRON, MANZO,
CUMMINGS & MEHLER, LTD.
200 WEST ADAMS ST., STE. 2850
CHICAGO IL 60606

COPY MAILED

MAY 14 2008

OFFICE OF PETITIONS

In re Application of	:	
Shunpei Yamazaki et al	:	
Application No. 11/070,121	:	DECISION GRANTING PETITION
Filed: March 1, 2005	:	UNDER 37 CFR 1.313(c)(2)
Attorney Docket No. 0553-0211.02	:	

This is a decision on the petition under 37 CFR 1.313(c)(2), filed May 13, 2008, to withdraw the above-identified application from issue after payment of the issue fee.

The petition is **GRANTED**.

The above-identified application is withdrawn from issue for consideration of a submission under 37 CFR 1.114 (request for continued examination). *See* 37 CFR 1.313(c)(2).

Petitioner is advised that the issue fee paid on May 9, 2008 ***cannot be refunded. If, however, this application is again allowed, petitioner may request that it be applied towards the issue fee required by the new Notice of Allowance.***[1]

Telephone inquiries should be directed to the undersigned at (571) 272-3208.

This application is being referred to Technology Center AU 2818 for processing of the request for continued examination under 37 CFR 1.114 and for consideration of the Amendment and IDS filed May 12, 2008.

Karen Creasy

Karen Creasy
Petitions Examiner
Office of Petitions

---

[1] *The request to apply the issue fee to the new Notice may be satisfied by completing and returning the new Part B – Fee(s) Transmittal Form (along with any balance due at the time of submission). Petitioner is advised that the Issue Fee Transmittal Form must be completed and timely submitted to avoid abandonment of the application.*

UNITED STATES PATENT AND TRADEMARK OFFICE

UNITED STATES DEPARTMENT OF COMMERCE
United States Patent and Trademark Office
Address: COMMISSIONER FOR PATENTS
P.O. Box 1450
Alexandria, Virginia 22313-1450
www.uspto.gov

GREER, BURNS & CRAIN
300 S WACKER DR
25TH FLOOR
CHICAGO, IL 60606

Mail Date: 04/21/2010

Applicant	: Tsuyoshi Kamada	: DECISION ON REQUEST FOR
Patent Number	: 7605788	: RECALCULATION of PATENT
Issue Date	: 10/20/2009	: TERM ADJUSTMENT IN VIEW
Appliction No	: 11/070,122	: OF WYETH AND NOTICE OF INTENT TO
Filed	: 03/01/2005	: ISSUE CERTIFICATE OF CORRECTION
		:

The Request for Recalculation is **GRANTED** to the extent indicated.

The patent term adjustment has been determined to be **1034** days. The USPTO will *sua sponte* issue a certificate of correction reflecting the amount of PTA days determined by the recalculation.

Prior to the issuance of the certificate of correction, the USPTO will afford patentee an opportunity to be heard and request reconsideration. Accordingly, patentee has **one month or thirty (30) days**, whichever is longer, to file a request for reconsideration of this patent term adjustment calculation. See 35 U.S.C. 154(b)(3)(B)(ii) and 37 CFR 1.322(a)(4). No extensions of time will be granted under 37 CFR 1.136.

Patentee should use document code PET.OP if electronically filing a request for reconsideration of this patent term adjustment calculation. The patentee must also include the information required by 37 CFR 1.705(b)(2) and the fee required by 37 CFR 1.18(e). If patentee does not file a timely request for reconsideration of this patent term adjustment calculation including the information required by 37 CFR 1.705(b)(2) and the fee required by 37 CFR 1.18(e), the USPTO will issue a certificate of correction reflecting the PTA determination noted above.

Patentee should be aware that in order to preserve the right to review in the United States District Court for the District of Columbia of the USPTO patent term adjustment determination, patentee must ensure that he or she also take the steps required under 35 U.S.C. 154(b)(4)(A) in a timely manner. Nothing in the request for recalculation should be construed as providing an alternative time frame for commencing a civil action under 35 U.S.C. 154(b)(4)(A).

Any questions concerning this decision should be directed to the Office of Patent Legal Administration at 571-272-7702.

UNITED STATES PATENT AND TRADEMARK OFFICE

UNITED STATES DEPARTMENT OF COMMERCE
United States Patent and Trademark Office
Address: COMMISSIONER FOR PATENTS
P.O. Box 1450
Alexandria, Virginia 22313-1450
www.uspto.gov

Olson & Cepuritis, LTD.
20 NORTH WACKER DRIVE
36TH FLOOR
CHICAGO, IL 60606

Mail Date: 04/21/2010

Applicant	: Fu-Lai Yu	: DECISION ON REQUEST FOR
Patent Number	: 7614438	: RECALCULATION of PATENT
Issue Date	: 11/10/2009	: TERM ADJUSTMENT IN VIEW
Appliction No	: 11/070,126	: OF WYETH AND NOTICE OF INTENT TO
Filed	: 03/01/2005	: ISSUE CERTIFICATE OF CORRECTION
		:

The Request for Recalculation is **GRANTED** to the extent indicated.

The patent term adjustment has been determined to be **1286** days. The USPTO will *sua sponte* issue a certificate of correction reflecting the amount of PTA days determined by the recalculation.

Prior to the issuance of the certificate of correction, the USPTO will afford patentee an opportunity to be heard and request reconsideration. Accordingly, patentee has **one month or thirty (30) days**, whichever is longer, to file a request for reconsideration of this patent term adjustment calculation. See 35 U.S.C. 154(b)(3)(B)(ii) and 37 CFR 1.322(a)(4). No extensions of time will be granted under 37 CFR 1.136.

Patentee should use document code PET.OP if electronically filing a request for reconsideration of this patent term adjustment calculation. The patentee must also include the information required by 37 CFR 1.705(b)(2) and the fee required by 37 CFR 1.18(e). If patentee does not file a timely request for reconsideration of this patent term adjustment calculation including the information required by 37 CFR 1.705(b)(2) and the fee required by 37 CFR 1.18(e), the USPTO will issue a certificate of correction reflecting the PTA determination noted above.

Patentee should be aware that in order to preserve the right to review in the United States District Court for the District of Columbia of the USPTO patent term adjustment determination, patentee must ensure that he or she also take the steps required under 35 U.S.C. 154(b)(4)(A) in a timely manner. Nothing in the request for recalculation should be construed as providing an alternative time frame for commencing a civil action under 35 U.S.C. 154(b)(4)(A).

Any questions concerning this decision should be directed to the Office of Patent Legal Administration at 571-272-7702.

UNITED STATES PATENT AND TRADEMARK OFFICE

Commissioner for Patents
United States Patent and Trademark Office
P.O. Box 1450
Alexandria, VA 22313-1450
www.uspto.gov

BRINKS HOFER GILSON & LIONE
P.O. BOX 10395
CHICAGO, IL 60610

MAILED

APR 12 2010

OFFICE OF PETITIONS

In re Application of	:	
PAUL, Ram H. Jr. et al.	:	
Application No. 11/070,130	:	DECISION ON PETITION
Filed: February 28, 2005	:	TO WITHDRAW
Attorney Docket No. **1000-342**	:	FROM RECORD
	:	

This is a decision on the Request to Withdraw as attorney or agent of record under 37 C.F.R. § 1.36(b), filed February 22, 2010.

The request is **NOT APPROVED** because it is moot.

A review of the file record indicates that the power of attorney to BRINKS HOFER GILSON & LIONE has been revoked by the assignee of the patent application on February 24, 2010. Accordingly, the request to withdraw under 37 C.F.R. § 1.36(b) is moot.

All future communications from the Office will continue to be directed to the below-listed address until otherwise notified by applicant.

Telephone inquires concerning this decision should be directed to Tredelle Jackson at 571-272-2783.

/Tredelle D. Jackson/
Paralegal Specialist
Office of Petitions

cc: **BUCHANAN INTELLECTUAL PROPERTY OFFICE LLC**
P.O. BOX 700
PERRYSBURG OH 43552-0700

UNITED STATES PATENT AND TRADEMARK OFFICE

Commissioner for Patents
United States Patent and Trademark Office
P.O. Box 1450
Alexandria, VA 22313-1450
www.uspto.gov

COPY MAILED

JUN 1 0 2009

OFFICE OF PETITIONS

COCHRAN FREUND & YOUNG LLC
LSI CORPORATION
2026 CARIBOU DRIVE
SUITE 201
FORT COLLINS, CO 80525

In re Application of	:	
Parag Maharana, et al.	:	
Application No. 11/070,131	:	ON PETITION
Filed: March 1, 2005	:	
Attorney Docket No. LSI.167US01 (04-1887)	:	
	:	

This is a decision on the petition under 37 CFR 1.137(b), filed April 28, 2009, to revive the above-identified application.

The petition is **GRANTED**.

The application became abandoned for failure to timely reply within the meaning of 37 CFR 1.113 to the final Office action, mailed October 9, 2008, which set a shortened statutory period for reply of three (3) months. No extension of time under the provisions of 37 CFR 1.136(a) was obtained. Accordingly, the application became abandoned on January 10, 2009. A Notice of Abandonment was mailed on April 22, 2009. On April 28, 2009, the present petition was filed.

The petition satisfies the requirements of 37 CFR 1.137(b) in that petitioner has supplied (1) the reply in the form of a Request for Continued Examination (RCE) 37 CFR 1.114, including the fee of $810; (2) the petition fee of $1,620; and (3) an adequate statement of unintentional delay[1].

This application is being referred to Technology Center AU 2184 for processing of the RCE in accordance with 37 CFR 1.114.

[1] 37 CFR 1.137(b)(3) requires a statement that the entire delay in filing the required reply from the due date for the reply until the filing of a grantable petition pursuant to 37 CFR 1.137(b) was unintentional. While it is not apparent whether the person signing the statement of unintentional delay was in a position to have firsthand or direct knowledge of the facts and circumstances of the delay at issue, such statement is being treated as having been made as the result of a reasonable inquiry into the facts and circumstances of such delay. See 37 CFR 10.18(b) and Changes to Patent Practice and Procedure; Final Rule Notice, 62 Fed. Reg. 53131, 53178 (October 10, 1997), 1203 Off. Gaz. Pat. Office 63, 103 (October 21, 1997). In the event that such an inquiry has not been made, petitioner must make such an inquiry. If such inquiry results in the discovery that it is not correct that the entire delay in filing the required reply from the due date for the reply until the filing of a grantable petition pursuant to 37 CFR 1.137(b) was unintentional, petitioner must notify the Office.

Telephone inquiries concerning this decision should be directed to the undersigned at (571) 272-3204. Inquiries relating to further prosecution should be directed to the Technology Center.

Sherry D. Brinkley
Petitions Examiner
Office of Petitions

UNITED STATES PATENT AND TRADEMARK OFFICE

UNITED STATES DEPARTMENT OF COMMERCE
United States Patent and Trademark Office
Address: COMMISSIONER FOR PATENTS
P.O. Box 1450
Alexandria, Virginia 22313-1450
www.uspto.gov

Polster, Lieder, Woodruff & Lucchesi, L.C.
12412 Powerscourt Dr. Suite 200
St. Louis, MO 63131-3615

Mail Date: 04/21/2010

Applicant	: Michael D. Gerdes	: DECISION ON REQUEST FOR
Patent Number	: 7574913	: RECALCULATION of PATENT
Issue Date	: 08/18/2009	: TERM ADJUSTMENT IN VIEW
Appliction No	: 11/070,140	: OF WYETH AND NOTICE OF INTENT TO
Filed	: 03/02/2005	: ISSUE CERTIFICATE OF CORRECTION
		:

The Request for Recalculation is **GRANTED** to the extent indicated.

The patent term adjustment has been determined to be **582** days. The USPTO will *sua sponte* issue a certificate of correction reflecting the amount of PTA days determined by the recalculation.

Prior to the issuance of the certificate of correction, the USPTO will afford patentee an opportunity to be heard and request reconsideration. Accordingly, patentee has **one month or thirty (30) days**, whichever is longer, to file a request for reconsideration of this patent term adjustment calculation. See 35 U.S.C. 154(b)(3)(B)(ii) and 37 CFR 1.322(a)(4). No extensions of time will be granted under 37 CFR 1.136.

Patentee should use document code PET.OP if electronically filing a request for reconsideration of this patent term adjustment calculation. The patentee must also include the information required by 37 CFR 1.705(b)(2) and the fee required by 37 CFR 1.18(e). If patentee does not file a timely request for reconsideration of this patent term adjustment calculation including the information required by 37 CFR 1.705(b)(2) and the fee required by 37 CFR 1.18(e), the USPTO will issue a certificate of correction reflecting the PTA determination noted above.

Patentee should be aware that in order to preserve the right to review in the United States District Court for the District of Columbia of the USPTO patent term adjustment determination, patentee must ensure that he or she also take the steps required under 35 U.S.C. 154(b)(4)(A) in a timely manner. Nothing in the request for recalculation should be construed as providing an alternative time frame for commencing a civil action under 35 U.S.C. 154(b)(4)(A).

Any questions concerning this decision should be directed to the Office of Patent Legal Administration at 571-272-7702.

UNITED STATES PATENT AND TRADEMARK OFFICE

Commissioner for Patents
United States Patent and Trademark Office
P.O. Box 1450
Alexandria, VA 22313-1450
www.uspto.gov

COPY MAILED

JUN 29 2007

OFFICE OF PETITIONS

HAYNES AND BOONE, LLP
901 MAIN STREET, SUITE 3100
DALLAS TX 75202

In re Application of	:	
COOK, Robert Lance et al.	:	
Application No. 11/070,147	:	DECISION ON PETITION
Filed: March 02, 2005	:	TO WITHDRAW
Attorney Docket No. **25791.351**	:	FROM RECORD

This is a decision on the Request to Withdraw as attorney or agent of record under 37 C.F.R. § 1.36(b), filed April 19, 2007.

The request is **NOT APPROVED**.

A grantable request to withdraw as attorney/agent of record must be signed by every attorney/agent seeking to withdraw or contain a clear indication that one attorney is signing on behalf of another/others. A request to withdraw will not be approved unless at least 30 (thirty) days would remain between the date of approval and the later of the expiration date of a time to file a response or the expiration date of the maximum time period which can be extended under 37 C.F.R. § 1.136(a).

The request cannot be approved because no reasons for withdrawal have been provided. The Office cannot, at this time, determine whether practitioner's request is one of the mandatory or permissive reasons enumerated in 37 CFR 10.40. Any subsequent requests must include reasons for withdrawal. Please note that there is a space provided for on PTO/SB/83 (Request to Withdraw as Attorney or Agent) to supply practitioner's reasons.

All future communications from the Office will continue to be directed to the above-listed address until otherwise notified by applicant.

Telephone inquiries concerning this decision should be directed to Michelle R. Eason at 571-272- 4231.

T. Williams
Terri Williams
Petitions Examiner
Office of Petitions

cc: **KING & SPALDING, L.L.P.**
TODD MATTINGLY
1100 LOUISIANA STREET, SUITE 4000
HOUSTON, TX 77002

UNITED STATES PATENT AND TRADEMARK OFFICE

UNITED STATES DEPARTMENT OF COMMERCE
United States Patent and Trademark Office
Address: COMMISSIONER FOR PATENTS
P.O. Box 1450
Alexandria, Virginia 22313-1450
www.uspto.gov

Joe McKinney Muncy
PO Box 1364
Fairfax, VA 22038-1364

Mail Date: 05/20/2010

Applicant	: Pao-Ching Tseng	: DECISION ON REQUEST FOR
Patent Number	: 7624332	: RECALCULATION of PATENT
Issue Date	: 11/24/2009	: TERM ADJUSTMENT IN VIEW
Application No	: 11/070,148	: OF WYETH AND NOTICE OF INTENT TO
Filed	: 03/03/2005	: ISSUE CERTIFICATE OF CORRECTION
		:

The Request for Recalculation is **GRANTED** to the extent indicated.

The patent term adjustment has been determined to be **1105** days. The USPTO will *sua sponte* issue a certificate of correction reflecting the amount of PTA days determined by the recalculation.

Prior to the issuance of the certificate of correction, the USPTO will afford patentee an opportunity to be heard and request reconsideration. Accordingly, patentee has **one month or thirty (30) days**, whichever is longer, to file a request for reconsideration of this patent term adjustment calculation. See 35 U.S.C. 154(b)(3)(B)(ii) and 37 CFR 1.322(a)(4). No extensions of time will be granted under 37 CFR 1.136.

Patentee should use document code PET.OP if electronically filing a request for reconsideration of this patent term adjustment calculation. The patentee must also include the information required by 37 CFR 1.705(b)(2) and the fee required by 37 CFR 1.18(e). If patentee does not file a timely request for reconsideration of this patent term adjustment calculation including the information required by 37 CFR 1.705(b)(2) and the fee required by 37 CFR 1.18(e), the USPTO will issue a certificate of correction reflecting the PTA determination noted above.

Patentee should be aware that in order to preserve the right to review in the United States District Court for the District of Columbia of the USPTO patent term adjustment determination, patentee must ensure that he or she also take the steps required under 35 U.S.C. 154(b)(4)(A) in a timely manner. Nothing in the request for recalculation should be construed as providing an alternative time frame for commencing a civil action under 35 U.S.C. 154(b)(4)(A).

Any questions concerning this decision should be directed to the Office of Patent Legal Administration at 571-272-7702.

UNITED STATES PATENT AND TRADEMARK OFFICE

Commissioner for Patents
United States Patent and Trademark Office
P.O. Box 1450
Alexandria, VA 22313-1450
www.uspto.gov

Kaplan Ward & Patel, LLC
Cumberland Center II
3100 Cumberland Boulevard, Suite 1400
Atlanta, GA 30339

MAILED

JUN 22 2009

OFFICE OF PETITIONS

In re Application of	:	
Terry Kinskey	:	
Application No. 11/070,203	:	DECISION ON PETITION
Filed: March 3, 2005	:	TO WITHDRAW
Attorney Docket No. 31290-RA11	:	FROM RECORD
	:	

This is a decision on the Request to Withdraw as attorney or agent of record under 37 C.F.R. § 1.36(b), filed May 6, 2009.

The request is **APPROVED**.

A grantable request to withdraw as attorney/agent of record must be signed by every attorney/agent seeking to withdraw or contain a clear indication that one attorney is signing on behalf of another/others. A request to withdraw will not be approved unless at least 30 (thirty) days would remain between the date of approval and the later of the expiration date of a time to file a response or the expiration date of the maximum time period which can be extended under 37 C.F.R. § 1.136(a).

The request was signed by Barry E. Kaplan on behalf of attorney/agents associated with customer number 30184. All attorneys/agents associated with customer number 30184 have been withdrawn.

Applicant is reminded that there is no attorney of record at this time.

The request to change the correspondence of record is not acceptable as the requested correspondence address is not that of (1) the first named signing inventor; or (2) an intervening assignee of the entire interest under 37 C.F.R. 3.71. Accordingly, all correspondence will be mailed to address of the inventor at the first copied address below, since no assignee has properly intervened in this application. A courtesy copy of this decision will be mailed to the address noted on the request. If this person(s) desire to receive future correspondence regarding this application, the proper power of attorney documents and/or a statement under 3.73(b) must be submitted.

Telephone inquiries concerning this decision should be directed to Kimberly Inabinet at 571-272-4618.

Kimberly Inabinet
Petitions Examiner
Office of Petitions

cc: Terry Kinskey
1011 Tullamore Place
Alpharetta, GA 30022-8077

cc: Infinity Consulting Group, LLC
c/o Union Rich USA, LLC
1377 Clint Moore Road, Suite 300
Boca Raton, FL 33487

UNITED STATES PATENT AND TRADEMARK OFFICE

UNITED STATES DEPARTMENT OF COMMERCE
United States Patent and Trademark Office
Address: COMMISSIONER FOR PATENTS
P.O. Box 1450
Alexandria, Virginia 22313-1450
www.uspto.gov

APPLICATION NUMBER	FILING OR 371(C) DATE	FIRST NAMED APPLICANT	ATTY. DOCKET NO./TITLE
11/070,203	03/03/2005	Terry Kinskey	31290-RA11

CONFIRMATION NO. 2590

POWER OF ATTORNEY NOTICE

30184
KAPLAN WARD & PATEL LLC
CUMBERLAND CENTER II
3100 CUMBERLAND BLVD , SUITE 1400
ATLANTA, GA 30339

OC000000036602183

Date Mailed: 06/22/2009

NOTICE REGARDING CHANGE OF POWER OF ATTORNEY

This is in response to the Power of Attorney filed 05/06/2009.

- The withdrawal as attorney in this application has been accepted. Future correspondence will be mailed to the new address of record. 37 CFR 1.33.

/kainabinet/

Office of Data Management, Application Assistance Unit (571) 272-4000, or (571) 272-4200, or 1-888-786-0101

UNITED STATES PATENT AND TRADEMARK OFFICE

Commissioner for Patents
United States Patent and Trademark Office
P.O. Box 1450
Alexandria, VA 22313-1450
www.uspto.gov

Thomas M. Hardman
Madson & Austin
15 West South Temple, Suite 900
Salt Lake City, Utah 84101

COPY MAILED

SEP 20 2007

OFFICE OF PETITIONS

In re Application of :
Lee Jung CHOU et al. :
Application No. 11/070,221 : ON PETITION
Filed: March 3, 2005 :
Attorney Docket No. BHT-3249-37 :

This is a decision on the petition under 37 CFR 1.137(b), filed July 26, 2007, to revive the above-identified application.

The petition is **GRANTED**.

The above-identified application became abandoned for failure to properly reply to the Office action mailed January 29, 2007, which set a shortened statutory period for reply of one (1) month. No extensions of time under the provisions of 37 CFR 1.136(a) were obtained. Accordingly, the above-identified application became abandoned on March 1, 2007.

The petition satisfies the conditions for revival pursuant to the provisions of 37 CFR 1.137(b) in that (1) the reply in the form of a response; (2) the petition fee of $1500; and (3) the required statement of unintentional delay have been received. Accordingly, the reply to the Office action of January 29, 2007 is accepted as having been unintentionally delayed.

It is not apparent whether the person signing the statement of unintentional delay was in a position to have firsthand knowledge of the facts and circumstances of the delay at issue. Nevertheless, such statement is being treated as having been made as the result of a reasonable inquiry into the facts and circumstances of such delay. See 37 CFR 10.18(b) and Changes to Patent Practice and Procedure; Final rule Notice, 62 Fed. Reg. 53131, 53178 (October 10, 1997), 1203 Off. Gaz. Pat. Office 63, 103 (October 21, 1997). In the event that such an inquiry has not been made, petitioner must make such an inquiry. If such inquiry results in the discovery that it is not correct that the entire delay in filing the required reply from the due date for the reply until the filing of a grantable petition pursuant of 37 CFR 1.137(b) was unintentional, petitioner must notify the Office.

Telephone inquiries concerning this decision should be directed to Brian Sines at (571) 272-6051 or in his absence, the undersigned at (571) 272-7099.

The application file is being referred to Technology Center AU 3724 for appropriate action on the concurrently filed amendment.

David Bucci
Petitions Examiner
Office of Petitions

UNITED STATES PATENT AND TRADEMARK OFFICE

UNITED STATES DEPARTMENT OF COMMERCE
United States Patent and Trademark Office
Address: COMMISSIONER FOR PATENTS
P.O. Box 1450
Alexandria, Virginia 22313-1450
www.uspto.gov

FINNEGAN, HENDERSON, FARABOW, GARRETT & DUNNER LLP
901 NEW YORK AVENUE, NW
WASHINGTON, DC 20001-4413

Mail Date: 04/21/2010

Applicant	: Min-Ta Wu	: DECISION ON REQUEST FOR
Patent Number	: 7652320	: RECALCULATION of PATENT
Issue Date	: 01/26/2010	: TERM ADJUSTMENT IN VIEW
Appliction No	: 11/070,226	: OF WYETH AND NOTICE OF INTENT TO
Filed	: 03/03/2005	: ISSUE CERTIFICATE OF CORRECTION
		:

The Request for Recalculation is **GRANTED** to the extent indicated.

The patent term adjustment has been determined to be **397** days. The USPTO will *sua sponte* issue a certificate of correction reflecting the amount of PTA days determined by the recalculation.

Prior to the issuance of the certificate of correction, the USPTO will afford patentee an opportunity to be heard and request reconsideration. Accordingly, patentee has **one month or thirty (30) days**, whichever is longer, to file a request for reconsideration of this patent term adjustment calculation. See 35 U.S.C. 154(b)(3)(B)(ii) and 37 CFR 1.322(a)(4). No extensions of time will be granted under 37 CFR 1.136.

Patentee should use document code PET.OP if electronically filing a request for reconsideration of this patent term adjustment calculation. The patentee must also include the information required by 37 CFR 1.705(b)(2) and the fee required by 37 CFR 1.18(e). If patentee does not file a timely request for reconsideration of this patent term adjustment calculation including the information required by 37 CFR 1.705(b)(2) and the fee required by 37 CFR 1.18(e), the USPTO will issue a certificate of correction reflecting the PTA determination noted above.

Patentee should be aware that in order to preserve the right to review in the United States District Court for the District of Columbia of the USPTO patent term adjustment determination, patentee must ensure that he or she also take the steps required under 35 U.S.C. 154(b)(4)(A) in a timely manner. Nothing in the request for recalculation should be construed as providing an alternative time frame for commencing a civil action under 35 U.S.C. 154(b)(4)(A).

Any questions concerning this decision should be directed to the Office of Patent Legal Administration at 571-272-7702.

UNITED STATES PATENT AND TRADEMARK OFFICE

UNITED STATES DEPARTMENT OF COMMERCE
United States Patent and Trademark Office
Address: COMMISSIONER FOR PATENTS
P.O. Box 1450
Alexandria, Virginia 22313-1450
www.uspto.gov

APPLICATION NO.	FILING DATE	FIRST NAMED INVENTOR	ATTORNEY DOCKET NO.	CONFIRMATION NO.
11/070,232	03/03/2005	Han-Ki Kim	P57383	3871

7590 11/07/2007

Robert E. Bushnell
Suite 300
1522 K Street, N.W.
Washington, DC 20005-1202

EXAMINER
CHEN, KEATH T

ART UNIT	PAPER NUMBER
1792	

MAIL DATE	DELIVERY MODE
11/07/2007	PAPER

Please find below and/or attached an Office communication concerning this application or proceeding.

The time period for reply, if any, is set in the attached communication.

UNITED STATES PATENT AND TRADEMARK OFFICE

Commissioner for Patents
United States Patent and Trademark Office
P.O. Box 1450
Alexandria, VA 22313-1450
www.uspto.gov

caf

Mailed: 11-7-07

In re application of HAN-KI KIM et al. Serial No. 11/070,232 Filed: March 3, 2005 For: INDUCTIVELY COUPLED PLASMA CHEMICAL VAPOR DEPOSITION APPARATUS	: : : : : : :	DECISION ON PETITION

This is a decision on the PETITION UNDER 37 CFR 1.181 to clarify as to the objection to Figures 8a and 8b.

On September 20, 2007, the examiner issued an office action. In the office action Fig. 8a and 8b were objected to as not clearly conveying the invention. The examiner then provided suggestions as to how Figures 5a, 6b, 7 and 12 may better convey the invention.

On September 27, 2007 the instant petition under 37 CFR 1.181 was filed to formally request that the examiner be directed to clarify the record as to the objection to Figures 8a and 8b.

DECISION

Petitioner argues that the examiner failed to identify the details as to the defects contained in Applicants' Figures 8a and 8b. It is agreed that the record is not clear as to the reason for objecting to Figures 8a and 8b. Further, it is unclear as to whether there was intended to be an objection to Figures 5a, 6b, 7 and 12 since these Figures were specifically mentioned in the paragraph pertaining to drawing objections.

Accordingly, because the office action is unclear as to the objection to Figures 8a and 8b, the petition is **GRANTED.**

The examiner is directed to send out a communication to applicant clarifying the record as to the objection to Figures 8a and 8b.

Jacqueline M. Stone, Director
Technology Center 1700
Chemical and Materials Engineering

Robert E. Bushnell
Suite 300
1522 K Street, N.W.
Washington DC 20005-1202

UNITED STATES PATENT AND TRADEMARK OFFICE

UNITED STATES DEPARTMENT OF COMMERCE
United States Patent and Trademark Office
Address: COMMISSIONER FOR PATENTS
P.O. Box 1450
Alexandria, Virginia 22313-1450
www.uspto.gov

GOOGLE / FENWICK
SILICON VALLEY CENTER
801 CALIFORNIA ST.
MOUNTAIN VIEW, CA 94041

Mail Date: 04/21/2010

Applicant	: Johnny Chen	: DECISION ON REQUEST FOR
Patent Number	: 7657520	: RECALCULATION of PATENT
Issue Date	: 02/02/2010	: TERM ADJUSTMENT IN VIEW
Appliction No	: 11/070,268	: OF WYETH AND NOTICE OF INTENT TO
Filed	: 03/03/2005	: ISSUE CERTIFICATE OF CORRECTION
		:

The Request for Recalculation is **GRANTED** to the extent indicated.

The patent term adjustment has been determined to be **905** days. The USPTO will *sua sponte* issue a certificate of correction reflecting the amount of PTA days determined by the recalculation.

Prior to the issuance of the certificate of correction, the USPTO will afford patentee an opportunity to be heard and request reconsideration. Accordingly, patentee has **one month or thirty (30) days**, whichever is longer, to file a request for reconsideration of this patent term adjustment calculation. See 35 U.S.C. 154(b)(3)(B)(ii) and 37 CFR 1.322(a)(4). No extensions of time will be granted under 37 CFR 1.136.

Patentee should use document code PET.OP if electronically filing a request for reconsideration of this patent term adjustment calculation. The patentee must also include the information required by 37 CFR 1.705(b)(2) and the fee required by 37 CFR 1.18(e). If patentee does not file a timely request for reconsideration of this patent term adjustment calculation including the information required by 37 CFR 1.705(b)(2) and the fee required by 37 CFR 1.18(e), the USPTO will issue a certificate of correction reflecting the PTA determination noted above.

Patentee should be aware that in order to preserve the right to review in the United States District Court for the District of Columbia of the USPTO patent term adjustment determination, patentee must ensure that he or she also take the steps required under 35 U.S.C. 154(b)(4)(A) in a timely manner. Nothing in the request for recalculation should be construed as providing an alternative time frame for commencing a civil action under 35 U.S.C. 154(b)(4)(A).

Any questions concerning this decision should be directed to the Office of Patent Legal Administration at 571-272-7702.

UNITED STATES PATENT AND TRADEMARK OFFICE

UNITED STATES DEPARTMENT OF COMMERCE
United States Patent and Trademark Office
Address: COMMISSIONER FOR PATENTS
P.O. Box 1450
Alexandria, Virginia 22313-1450
www.uspto.gov

APPLICATION NO.	FILING DATE	FIRST NAMED INVENTOR	ATTORNEY DOCKET NO.	CONFIRMATION NO.
11/070,269	03/03/2005	Frank S. D'Amelio SR.	46380	7395

1609 7590 10/17/2008
ROYLANCE, ABRAMS, BERDO & GOODMAN, L.L.P.
1300 19TH STREET, N.W.
SUITE 600
WASHINGTON,, DC 20036

EXAMINER
CLARK, AMY LYNN

ART UNIT	PAPER NUMBER
1655	

MAIL DATE	DELIVERY MODE
10/17/2008	PAPER

Please find below and/or attached an Office communication concerning this application or proceeding.

The time period for reply, if any, is set in the attached communication.

UNITED STATES PATENT AND TRADEMARK OFFICE

OCT 1 7 2008

Commissioner for Patents
United States Patent and Trademark Office
P.O. Box 1450
Alexandria, VA 22313-1450
www.uspto.gov

Garrett V. Davis
ROYLANCE, ABRAMS, BERDO & GOODMAN, L.L.P.
1300 19TH STREET N.W., SUITE 600
WASHINGTON D.C. 20036

In re Application of	:
D'AMELIO et al	:Decision on Petition
Serial No.: 11/070,269	:
Filed : March 3, 2005	:
Attorney Docket No.: 46380	:

This letter is in response to the Petition under 37 C.F.R. 1.181 filed on July 8, 2008 requesting reconsideration of the restriction requirement. The delay in acting upon this petition is regretted.

BACKGROUND AND DISCUSSION

On December 12, 2005, the examiner rejected originally filed process and composition Claims 1-19.

On March 13, 2006, Applicant filed a response to the non-final Office action.

On June 1, 2006, the Examiner considered Applicants remarks and made the Office action FINAL.

On October 2, 2006, Applicants filed an RCE and amended the previously pending claims.

On November 9, 2006, the examiner mailed restriction requirement in which claims 1, 3-5, 7-9, 11-19 were divided in 4 groups as follows:

> Claims 1, 3-5, and 7 drawn to a process for producing an extract
> Claims 8, 9 and 11-14, drawn to a composition comprising an extract.
> Claims 15-18 drawn to a process for using an extract.
> Claim 19, drawn to a dry extract.

The examiner further required an election of species to the method of Claim 3 or 4 in the event Group I was selected.

On December 11, 2006, Applicants elected. The Applicant elected Group I and elected the species of Claim 4 with traverse. The applicant asserted that the requirement was unreasonable and unwarranted since this is a third Office action on the merits and all of the claims were previously searched twice.

On January 16, 2007, the Examiner issued a non-final Office action rejecting Claims 1, 4-5, 7 and addressed the Applicants traversal by repeated the restriction requirement and the rejections previously of record.

On May 16, 2007, Applicants filed a response to the action and added new Claims 20-30, directed to a process of producing an extract.

On August 10, 2007, the examiner withdrew newly added Claims 20-30 as being directed to an invention independent and distinct from the invention originally claimed.

On October 31, 2007, Applicants filed a Request for Continued Examination and amended the previously pending claims.

On February 7, 2008, a non-compliant amendment notice was mailed.

On February 11, 2008, Applicants filed a new listing of the claims.

On May 1, 2008, the Examiner rejected Claims 1 and 4.

On July 8, 2008, applicants filed this petition to request that the Office reconsider the restriction requirement.

On 1 October 2008, applicants filed a response to the Office action and added new claim 31 and cancelled claims 8, 9 and 11-14.

DISCUSSION

The petition and file history have been carefully considered.

MPEP 803 states:

> There are two criteria for a proper requirement for restriction between patentably distinct inventions:
>
> (A) The inventions must be independent (see MPEP § 802.01, § 806.06, § 808.01) or distinct as claimed (see MPEP § 806.05 - § 806.05(j)); and
>
> (B) There would be a serious burden on the examiner if restriction is not required (see MPEP § 803.02, § 808, and § 808.02).

MPEP 806 states in part:

> The general principles relating to distinctness or independence may be summarized as follows:
>
> .....
>
> > (C) Where inventions are related as disclosed but are not distinct as claimed, restriction is never proper.
>
> ....
>
> Where restriction is required by the Office double patenting cannot be held, and thus, it is imperative the requirement should never be made where related inventions as claimed are not distinct. For (B) and (C) see MPEP § 806.05 - § 806.05(j) and § 809.03. See MPEP § 802.01 for criteria for patentably distinct inventions.

The petition filed July 8, 2008 argues that Claims 1, 20 and 24 are not independent or distinct inventions. The chart provided below illustrates the significant overlap in scope between the process of Claims 1, 20 and 24.

1. (Currently amended) A process for producing an extract of Pueraria candollei var. mirifica Airy Shaw. & Suvat. comprising the steps of	20. (Withdrawn - Currently amended) A process for producing an extract of Pueraria candollei var. mirifica Airy Shaw. & Suvat. comprising the steps of	24. (Withdrawn - Currently amended) A process for producing an extract from Pueraria candollei var. mirifica A Shaw. & Suvat. containing miroestrol, deoxvmiroestrol, diadzin, puerarin, genistin, diadzein and genistein, the process comprising the steps of
obtaining a dry particulate plant material of Pueraria candollei var. mirifica A Shaw. & Suvat.	obtaining a dry particulate plant material of Pueraria candollei var. mirijqca A Shaw. & Suvat.	
contacting said particulate plant material with a first extraction solvent containing about 40% to 60% by volume ethanol, and obtaining a first liquid extract	contacting said particulate with a first aqueous ethanol extraction solvent consisting essentially of a mixture of water and ethanol, and obtaining a first liquid extract	contacting a dry particulate plant material of Pueraria eandollei var. mirifiea A Shaw. & Suvat. with at least one first ~ ethanol extraction solvent containing about 40% to about 69% by volume ethanol and obtaining a first extraction liquid

contacting said plant material with a second extraction solvent containing 60% to 69% by volume ethanol to obtain a second liquid extract	contacting said particulate with at least one second aqueous ethanol extraction solvent containing 60% to 69% by volume ethanol to obtain a second liquid extract	contacting the particulate plant material with a second ethanol extraction solvent and obtaining a second liquid extract, wherein said second aqueous ethanol solvent has an ethanol concentration greater than said first aqueous solvent;
contacting said plant material with a third extraction solvent containing ethanol and obtaining a third liquid extract and where said third extraction solvent has an ethanol content greater than said first extraction solvent; and		contacting the particulate plant material with a third ethanol extraction solvent obtaining a third liquid extract, wherein the ethanol content of the third ethanol extraction solvent is different from the ethanol content of the first and second ethanol extraction solvents; and
combining the first second and third liquid extracts, and drying the liquid extracts to obtain a substantially dry extract comprising at least 20 mg miroestrol and deoxymiroestrol, about 3-11 mg daidzin, about 12-30 mg puerarin, about 0.5-2.0 mg genistin, about 1.1-3.6 mg daidzein, and about 0.2-2 mg genistein based on 1 O0 g of said extract, and where said daidzin, puerarin, genistin, daidzein and genistein in the extract are present in substantially the same proportions as said plant material.	combining the first and second liquid extracts and drying the liquid extracts to obtain a substantially dry extract, wherein said dry extract comprises at least 20 mg miroestrol and deoxymiroestrol, about 3-11 mg daidzin, about 12-30 mg puerarin, about 0.5-2.0 mg genistin, about 1.1-3.6 mg daidzein, and about 0.2-2 mg genistein based on 100 g of said extract.	combining said first and second liquid extracts and drying said combined liquid extracts to obtain a substantially dry extract comprising at least 20 mg miroestrol and deoxymiroestrol, about 3-11 mg diadzin, about 12-30 mg puerarin, about 0.5-2.0 mg genistin, about 1.1-3.6 mg diadzein, and about 0.2-2 mg genistein based on said extract.

From review of the chart above, there are no mutually exclusive active steps which distinguish between the processes of Claims 1, 20 and 24. Similarly, new claim 31 is directed to a process for producing an extract requiring steps that overlap in scope with the steps of examined claim 1.

Withdrawn Claim 23 is drawn to a dry extract obtained by the process of Claim 20, and as such is not distinct from the dry extract of already examined Claim 19.

Moreover, the Office has already provided an examination of original Claims 1-19 in the Office actions mailed on 16 January 2007 and 10 August 2007. Thus, the examination of Group I-IV would not impose a serious burden. Groups I-IV and Claims 20-31, as claimed, are not distinct from each other and because the concurrent examination would not present a serious burden upon the Office if restriction were not required.

DECISION

The petition is **GRANTED** for the reasons set forth above.

The restriction required between Group I-IV set forth in the Office action mailed 9 November 2006 and the withdrawal of claims 20-30 by original presentation set forth in the Office action mailed 10 August 2007 are both withdrawn

Pending Claims 15-29 are rejoined with the claims already under examination (Claims 1, 4), and said claims will be examined together with new claim 31.

The application will be forwarded to the examiner for the preparation of a new non-final action which addresses Claims 1, 4, 15-29 and 31 consistent with this decision.

Should there be any questions about this decision, please contact Special Program Examiner Julie Burke, by letter addressed to Director, Technology Center 1600, at the address listed above, or by telephone at 571-272-1600 or by facsimile sent to the general Office facsimile number, 571-273-8300.

Remy Yucel
Director, Technology Center 1600
jb/jg

UNITED STATES PATENT AND TRADEMARK OFFICE

Commissioner for Patents
United States Patent and Trademark Office
P.O. Box 1450
Alexandria, VA 22313-1450
www.uspto.gov

MORRISON & FOERSTER LLP
1650 TYSONS BOULEVARD
SUITE 400
MCLEAN, VA 22102

COPY MAILED

SEP 2 4 2007

OFFICE OF PETITIONS

In re Application of	:	
Henning Hartmann	:	
Application No. 11/070,281	:	DECISION ON PETITION
Filed: March 3, 2005	:	TO WITHDRAW
Attorney Docket No. 543822012700	:	FROM RECORD
	:	

This is a decision on the Request to Withdraw as attorney or agent of record under 37 C.F.R. § 1.36(b) filed May 2, 2007.

The request is **DISMISSED** as moot.

A review of the file record indicates that the power of attorney to Morrison & Foerster, LLP has been revoked by the assignee of the patent application on September 7, 2007. Accordingly, the request to withdraw under 37 C.F.R. § 1.36(b) is moot.

All future communications from the Office will continue to be directed to the below-listed address until otherwise notified by applicant.

Telephone inquires concerning this decision should be directed to undersigned at 571-272-1642.

April M Wise

April M. Wise
Petitions Examiner
Office of Petitions

cc: SLATER & MATSIL, LLP
17950 PRESTON ROAD
SUITE 1000
DALLAS, TX 75252

UNITED STATES PATENT AND TRADEMARK OFFICE

Commissioner for Patents
United States Patent and Trademark Office
P.O. Box 1450
Alexandria, VA 22313-1450
www.uspto.gov

COLOPLAST A/S
Attention: Corporate Patents
Holtedam 1
DK-3050 Humlebaek DK
DENMARK

MAILED

MAR 24 2010

OFFICE OF PETITIONS

In re Patent of Bruun et al.	:	DECISION ON REQUEST
Patent No. 7,571,804	:	FOR RECONSIDERATION OF
Issue Date: August 11, 2009	:	PATENT TERM ADJUSTMENT
Application No. 11/070,283	:	AND NOTICE OF INTENT TO
Filing Date: March 3, 2005	:	ISSUE CERTIFICATE OF
Attorney Docket No. 2004051-US	:	CORRECTION

This is a decision on the petition filed October 4, 2009, which is being treated as a petition under 37 C.F.R. § 1.705(d) requesting the patent term adjustment indicated on the patent be corrected to indicate the term of the above-identified patent is extended or adjusted by one thousand sixteen (1,016) days.

The petition to correct the patent term adjustment indicated on the above-identified patent to indicate the term of the patent is extended or adjusted by one thousand sixteen (1,016) days is **GRANTED to the extent indicated herein**.

The petition states,

> The period between May 4, 2006 (i.e. the day after the date that is 14 months after the application was filed) and the first date of an action under 35 U.S.C. §132 (January 11, 2008) is believed to be 613 days.

The first Office action was mailed on September 11, 2008, not January 11, 2008. Therefore, the correct period of delay under 37 C.F.R. § 1.703(a)(1) is 862 days.

The petition asserts the period of delay under 37 C.F.R. § 1.703(b) ("B Delay") is 523 days. Specifically, the petition states,

> Under 37 C.F.R. § 1.703(b) the number of days in the period beginning on the day after the date that is three years after the date on which the application was filed (this date would be March 3, 2008) and ending on the date a patent was issued (August 11, 2009) is approximately 523 days.

The Office has determined the actual number of days beginning on March 4, 2008, the day after the date three years after the filing date, and ending on August 11, 2009, the date the patent issued, is 526 days.

The total period of Office delay is the sum of the period of delay under 37 C.F.R. § 1.703(a) ("A Delay") and the period of B Delay to the extent the periods of delay do not overlap. The period of A Delay includes 122 days due to the Office's issuance of the patent on August 11, 2009, more than four months after payment of the issue fee. The 122 days of A Delay overlap with 122 days of B Delay. Therefore, total Office delay is 1,388 days which is the sum of 984 days of A Delay and 526 days of B Delay reduced by 122 days of overlap

In view of the prior discussion, the patent term adjustment is 1,268 days which is 1,388 days of Office delay reduced by 120 days of delay under 37 C.F.R. § 1.704(c).

The Office will *sua sponte* issue a certificate of correction. Pursuant to 37 C.F.R. § 1.322, the Office will not issue a certificate of correction without first providing assignee or patentee an opportunity to be heard. Accordingly, patentees are given **one (1) month or thirty (30) days**, whichever is longer, from the mail date of this decision to respond. No extensions of time will be granted under 37 C.F.R. § 1.136.

The Office acknowledges submission of the $200.00 fee set forth in 37 C.F.R. § 1.18(e). No additional fees are required.

The application is being forwarded to the Certificates of Correction Branch for issuance of a certificate of correction. The Office will issue a certificate of correction indicating that the term of the patent is extended or adjusted by one thousand two hundred sixty-eight (1,268) days.

Telephone inquiries specific to this decision should be directed to Senior Petitions Attorney Steven Brantley at (571) 272-3203.

Anthony Knight
Supervisor
Office of Petitions

Enclosure: Copy of DRAFT Certificate of Correction

UNITED STATES PATENT AND TRADEMARK OFFICE

CERTIFICATE OF CORRECTION

PATENT NO.	:	7,571,804 B2
ISSUE DATE	:	August 11, 2009
INVENTOR(S)	:	Bruun et al.

DRAFT

It is certified that error appears in the above-identified patent and that said Letters Patent is hereby corrected as shown below:

On the cover page,

[*] Notice: Subject to any disclaimer, the term of this patent is extended or adjusted under 35 U.S.C. 154(b) by 864 days.

Delete the phrase "by 864 days" and insert - by 1268 days--

US007571804B2

(12) United States Patent
Kjellmann Bruun et al.

(10) Patent No.: US 7,571,804 B2
(45) Date of Patent: Aug. 11, 2009

(54) PACKAGE FOR A MEDICAL DEVICE

(75) Inventors: **Bo Kjellmann Bruun**, Copenhagen O (DK); **Lotte M. Klixbull**, Copenhagen V (DK); **Jan Torstensen**, Virum (DK)

(73) Assignee: **Coloplast A/S**, Humlebaek (DK)

(*) Notice: Subject to any disclaimer, the term of this patent is extended or adjusted under 35 U.S.C. 154(b) by 864 days.

(21) Appl. No.: **11/070,283**

(22) Filed: **Mar. 3, 2005**

(65) **Prior Publication Data**

US 2006/0196783 A1 Sep. 7, 2006

(51) **Int. Cl.**
B65D 83/10 (2006.01)

(52) **U.S. Cl.** **206/210**; 206/222; 206/364

(58) **Field of Classification Search** 206/205, 206/210, 219, 222, 363, 364, 365
See application file for complete search history.

(56) **References Cited**

U.S. PATENT DOCUMENTS

3,648,704	A	3/1972	Jackson	
3,898,993	A	8/1975	Taniguchi et al.	
3,967,728	A	7/1976	Gordon et al.	
4,206,843	A *	6/1980	Rainey	206/216
4,362,241	A *	12/1982	Williams	206/210
4,754,877	A *	7/1988	Johansson et al.	206/364
6,634,498	B2	10/2003	Kayerød et al.	
2005/0015076	A1	1/2005	Giebmeyer et al.	

FOREIGN PATENT DOCUMENTS

DE	10213411	10/2003
WO	WO 97/26937	7/1997
WO	WO 98/11932	3/1998
WO	WO 99/30761	6/1999
WO	WO 01/43807	6/2001
WO	WO 2004/075944	9/2004

* cited by examiner

Primary Examiner—Jacob K Ackun, Jr.
(74) *Attorney, Agent, or Firm*—Jacobson Holman PLLC

(57) **ABSTRACT**

An assembly for wetting a medical device, in particular a urinary catheter, with a fluid medium is provided. The device is packed in a package which contains the fluid medium confined in a compartment. To ensure wetting of the device, the package is adapted to open the compartment and the package in one and the same opening action, preferably so that the compartment opens at the latest when the package opens. In that way, removal of the device from the package requires opening of the compartment and the device is therefore wetted automatically as part of the opening procedure.

17 Claims, 7 Drawing Sheets

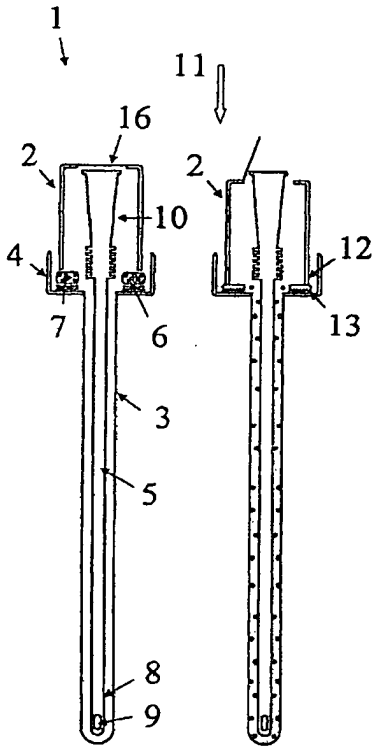

UNITED STATES PATENT AND TRADEMARK OFFICE

Commissioner for Patents
United States Patent and Trademark Office
P.O. Box 1450
Alexandria, VA 22313-1450
www.uspto.gov

MAILED

SEP 11 2009

OFFICE OF PETITIONS

VENABLE LLP
P.O. BOX 34385
WASHINGTON DC 20043-9998

In re Patent No. 7,490,706	:	DECISION ON REQUEST FOR
Issued: February 17, 2009	:	RECONSIDERATION OF PATENT
Application No. 11/070,284	:	TERM ADJUSTMENT AND
Filed: March 3, 2005	:	NOTICE OF INTENT TO ISSUE
Atty Docket No.42835-213612	:	CERTIFICATE OF CORRECTION

This is a decision on the "PETITION FOR PATENT TERM ADJUSTMENT UNDER 37 C.F.R. § 1.705," filed April 17, 2009, which is properly treated under 37 CFR 1.705(d). Patentees requests that the patent term adjustment for the above-identified patent be set at 203 days.

The request for reconsideration of the patent term adjustment indicated in the patent is **GRANTED**.

Patentees are given **THIRTY (30) DAYS or ONE (1) MONTH, whichever is longer**, from the mail date of this decision to respond. No extensions of time will be granted under 37 CFR 1.136.

The patent term adjustment indicated in the patent is to be corrected by issuance of a certificate of correction showing a revised Patent Term Adjustment of **203 days**.

On February 17, 2009, Application No. 11/070,284 matured into Patent No. 7,490,706. The instant request for reconsideration filed April 17, 2009, was timely filed within two (2) months of the date the patent issued. See 37 CFR 1.705(d). Patentees dispute the reduction of 43 days associated with the filing of a "miscellaneous incoming letter" received in the Office on January 6, 2009. Patentees assert that the paper filed on January 6, 2009, was a copy of a supplemental Application Data Sheet (ADS) first filed August 20, 2007, in response to the examiner's requirement to correct the inventors' mailing addresses as set forth in the non-final Office action of April

18, 2007. Patentees further state that the examiner mistakenly again required the correction of the inventors mailing addresses in the Notice of Allowance mailed October 6, 2008. Patentees note that, in a communication mailed December 31, 2008, the examiner acknowledged the supplemental ADS first filed August 20, 2007, and withdrew the requirement made in the Notice of Allowance for a new oath or declaration to be filed. Based on the aforementioned, patentees assert that the reduction of 43 days for the filing of the copy of the supplemental ADS on January 6, 2009, is not warranted.

A review of the PALM calculations for this application reveals that the patent term adjustment was reduced by 43 days for the submission of the "miscellaneous incoming letter." See 37 CFR 1.704(c)(10).

In response to the Notice of Allowability, on January 6, 2009, patentees submitted a copy of the supplemental ADS originally filed on August 20, 2007. Patentees stated therein that no new supplemental ADS was being submitted as the requirement was met by the supplemental ADS as filed August 20, 2007. At the same time, by a letter mailed December 31, 2008, the Office withdrew the requirement for correction of the mailing addresses for the inventors in light of the supplemental ADS filed August 20, 2007. Thus, the Office acknowledged that the supplemental ADS, as filed on August 20, 2007, was sufficient. It is appropriate, for purposes of calculating any patent term adjustment, to treat the supplemental ADS as filed on August 20, 2007. The filing of January 6, 2009 included an introductory comment, notifying the Office of the error in the Notice of Allowance requiring resubmission of the application data sheet. Under the circumstances, no period of reduction is warranted for the resubmission of the supplemental ADS and introductory comment on January 6, 2009. It is further noted that the supplemental ADS as originally filed on August 20, 2007, was not filed under circumstances warranting entry of a period of reduction. Thus, it is concluded that the reduction of 43 days is not warranted and is being removed.

In view thereof, the patent term adjustment indicated in the patent should be **203 days**.

The Office acknowledges the fee as set forth in 37 CFR 1.18(e). No additional fee is required.

This matter is being referred to the Certificates of Correction Branch for issuance of a certificate of correction in order to rectify this error. The Office will issue a certificate of correction indicating that the term of the above-identified patent is extended or adjusted by **203 days**.

Telephone inquiries specific to this matter should be directed to Kenya A. McLaughlin, Petitions Attorney, at (571) 272-3222.

Christina Tartera Donnell

Christina Tartera Donnell
Senior Petitions Attorney
Office of Petitions

Enclosure: Copy of DRAFT Certificate of Correction

DRAFT COPY

UNITED STATES PATENT AND TRADEMARK OFFICE

CERTIFICATE OF CORRECTION

PATENT : 7,490,706 B2

DATED : Feb. 17, 2009

INVENTOR(S) : Robertson, et al.

It is certified that error appears in the above-identified patent and that said Letters Patent is hereby corrected as shown below:

On the cover page,

[*] Notice: Subject to any disclaimer, the term of this patent is extended or adjusted under 35 USC 154(b) by (160) days

Delete the phrase "by 160 days" and insert – by 203 days--

UNITED STATES PATENT AND TRADEMARK OFFICE

Commissioner for Patents
United States Patent and Trademark Office
P.O. Box 1450
Alexandria, VA 22313-1450
www.uspto.gov

MICHAEL L. LEETZOW, ESQ.
MICHAEL L. LEETZOW, P.A.
5213 SHORELINE CIRCLE
SANFORD, FL 32771

COPY MAILED

JAN 07 2009

OFFICE OF PETITIONS

In re Application of	:	
David S. HOLLANDER, et al	:	
Application No. 11/070,298	:	DECISION ON PETITION
Filed: March 2, 2005	:	TO WITHDRAW
Attorney Docket No. ALAD-005	:	FROM RECORD
	:	

This is a decision on the Request to Withdraw as attorney or agent of record under 37 C.F.R. § 1.36(b), filed November 19, 2008.

The request is **APPROVED**.

A grantable request to withdraw as attorney/agent of record must be signed by every attorney/agent seeking to withdraw or contain a clear indication that one attorney is signing on behalf of another/others. The Office requires the practitioner(s) requesting withdrawal to certify that he, she, or they have: (1) given reasonable notice to the client, prior to the expiration of the response period, that the practitioner(s) intends to withdraw from employment; (2) delivered to the client or a duly authorized representative of the client all papers and property (including funds) to which the client is entitled; and (3) notified the client of any responses that may be due and the time frame within which the client must respond, pursuant 37 CFR 10.40(c).

The request was signed by Michael L. Leetzow on behalf of the attorneys of record associated with Customer No. 34203.

The attorneys of record Associated with Customer No. 34203 have been withdrawn.

Applicant is reminded that there is no attorney of record at this time.

The request to change the correspondence address of record is not acceptable as the requested correspondence address is not that of: (1) the first named signing inventor; or (2) an intervening assignee of the entire interest under 37 C.F.R 3.71. All future communications from the Office will be directed to the assignee at the first copied address below until otherwise properly notified by the applicant.

Telephone inquiries concerning this decision should be directed to the undersigned at 571-272-6735.

Diane Goodwyn
Petitions Examiner
Office of Petitions

cc : SNAP PALLET LLC
133-33 BROOKVILLE BOULEVARD
SUITE 229
ROSEDALE, NY 11422

cc : ALAN ADEN
1655 JACKSON STREET
LONGWOOD, FL 32750

UNITED STATES PATENT AND TRADEMARK OFFICE

Commissioner for Patents
United States Patent and Trademark Office
P.O. Box 1450
Alexandria, VA 22313-1450
www.uspto.gov

STAAS & HALSEY LLP
SUITE 700
1201 NEW YORK AVENUE, N.W.
WASHINGTON DC 20005

COPY MAILED

FEB 09 2006

OFFICE OF PETITIONS

In re Application of
Yasushi Hara et al.
Application No. 11/070,302
Filed: March 3, 2005
Attorney Docket No. 1405.1088

: DECISION ON PETITION

This is a decision on the petition filed September 13, 2005, under 37 CFR 1.53, in response to the Notice of Incomplete Nonprovisional Application mailed August 22, 2005. The petition requests that the above identified application be accorded a filing date of March 3, 2005.

The petition is **GRANTED**.

The application was deposited on March 3, 2005 however, after reasonable search, the application papers could not be located. Pursuant to 37 CFR 1.251, the Office solicited copies of the complete application from the applicants to reconstruct the file. In response thereof, the applicants provided copies of the application and a statement that the documents submitted constituted a complete and accurate record of all correspondence between the Office and applicants.

Subsequent to the 37 CFR 1.251 response, a Notice of Incomplete Nonprovisional Application was mailed, stating that the application had not been accorded a filing date because the application was deposited without drawings and that the filing date of the application would be the date of receipt of the drawings.

Petitioners assert that upon filing, the complete application included six sheets of drawings (Figures 1-11) and point to a date stamped post card receipt of the 37 CFR 1.251 response as proof of filing.

Unfortunately, a copy of the referenced date stamped post card receipt does not appear to be a part of the petition as filed on September 13, 2005 however, upon a review of the Office file, six sheets of drawings, with Figures 1-11, have been located among the files received on March 3, 2005. The drawing figures are located amongst the papers listed as "371P". As this petition appears to have resulted from an error on the part of the USPTO rather than the applicant, no petition fee is due and none has been charged.

This matter is being referred to the Office of Initial Patent Examination for further processing with a filing date of March 3, 2005, using the application papers filed on that date.

Telephone inquiries concerning this matter may be directed to the undersigned Petitions Attorney at (571) 272-3212.

Patricia Faison-Ball

Patricia Faison-Ball
Senior Petitions Attorney
Office of Petitions

UNITED STATES PATENT AND TRADEMARK OFFICE

JUN 15 2007

Commissioner for Patents
United States Patent and Trademark Office
P.O. Box 1450
Alexandria, VA 22313-1450
www.uspto.gov

DANA REWOLDT
GARST SEED COMPANY
2369 330TH STREET
PO BOX 500
SLATER IA 50244

In re Application of :
Arturo Baletka
Serial No.: 11/070,340
Filed: March 1, 2005
Attorney Docket No.: G5205

: PETITION DECISION

This is in response to the petition under 37 CFR § 1.59(b), filed May 18, 2007, to expunge information from the above identified application. This application has not been allowed.

Petitioner requests that the Reply to Request for Information Under 37 CFR 1.105, and attachment thereto, submitted to the Patent Office on January 3, 2007, be expunged from the record. Petitioner states either: (A) that the information contains trade secret material, proprietary material and/or material that is subject to a protective order which has not been made public; or (B) that the information submitted was unintentionally submitted and the failure to obtain its return would cause irreparable harm to the party who submitted the information or to the party in interest on whose behalf the information was submitted, and the information has not otherwise been made public. The petition fee set forth in 37 CFR § 1.17(g) has been paid.

This is an examined application which is currently under non-final rejection. As such the information provided has been reviewed, in part, but proceedings in the application have not been terminated. As stated in M.P.E.P. 724, upon allowance or other action closing prosecution in an application, petition may be made for return of Proprietary information. The information cannot be expunged at this time.

The petition is **DISMISSED**. Applicant may resubmit the petition subsequent to a Notice of Allowability or *ex parte Quayle* action being mailed in the application. No additional petition fee will be required at that time.

Should there be any questions about this decision please contact Marianne C. Seidel by letter addressed to Director, TC 1600, at the address listed above, or by telephone at 571-272-0584 or by facsimile sent to the general Office facsimile number, 703-872-9306.

Marianne C. Seidel
Quality Assurance Specialist/Program Examiner
Technology Center 1600

UNITED STATES PATENT AND TRADEMARK OFFICE

Commissioner for Patents
United States Patent and Trademark Office
P.O. Box 1450
Alexandria, VA 22313-1450
www.uspto.gov

PERKINS COIE LLP/MSFT
P. O. BOX 1247
SEATTLE WA 98111-1247

MAILED
FEB 09 2009
OFFICE OF PETITIONS

In re Application of :
Zhang et al. :
Application No. 11/070,382 : ON APPLICATION
Filed: March 1, 2005 : FOR
Atty Docket No. 418268138US : PATENT TERM ADJUSTMENT

This is in response to the APPLICATION FOR PATENT TERM ADJUSTMENT UNDER 35 USC § 1.705 filed January 7, 2009. Applicants request that the determination of patent term adjustment be corrected from five hundred and fifty five (555) days to one thousand thirteen (1013) days on the basis that the Office will take 3 years and 458 days to issue the patent[1].

This application for patent term adjustment was filed with payment of the Issue Fee on January 7, 2009. The instant application for patent term adjustment requests reconsideration of the patent term adjustment as it relates to the Office's failure to issue the patent within 3 years of the filing date. A decision is being **held in abeyance** until after the actual patent date. Knowledge of the actual date the patent issues is ordinarily required to calculate the amount, if any, of additional patent term patentee is entitled to for Office failure to issue the patent within 3 years. See § 1.703(b). It is noted that at the time of this decision, the patent has not issued.

Applicants are given **TWO (2) MONTHS** from the issue date of the patent to file a written request for reconsideration of the patent term adjustment for Office failure to issue the patent within 3 years. A copy of this decision should accompany the request. Applicants may seek such consideration without payment of an additional fee. However, as to all other bases for seeking reconsideration of the patent term adjustment indicated in the

[1] Applicants do not know the exact date the patent will issue, but predict the patent will issue June 2, 2009.

patent, all requirements of § 1.705(d) must be met. Requests for reconsideration on other bases must be timely filed and must include payment of the required fee.

Rather than file the request for reconsideration of Patent Term Adjustment at the time of the mailing of the notice of allowance, applicants are advised that they may wait until the time of the issuance of the patent and file a request for reconsideration of the patent term pursuant to 37 CFR 1.705(d). The USPTO notes that it does not calculate the amount of time earned pursuant to 37 CFR 1.702(b) until the time of the issuance of the patent and accordingly, the Office will consider any request for reconsideration of the patent term adjustment due to an error in the calculation of 37 CFR 1.702(b) to be timely if the request for reconsideration is filed within two months of the issuance of the patent.

The Office acknowledges submission of the $200.00 fee set forth in 37 CFR 1.18(e). No additional fees are required.

The application file is being forwarded to the Office of Data Management for issuance of the patent. The patent term adjustment indicated on the patent (as shown on the Issue Notification mailed about three weeks prior to patent issuance) will include any additional adjustment accrued both for Office delay in issuing the patent more than four months after payment of the issue fee and satisfaction of all outstanding requirements, and for the Office taking in excess of three years to issue the patent (to the extent that the three-year period does not overlap with periods already accorded).

Telephone inquiries specific to this matter should be directed to Petitions Attorney Charlema Grant at (571) 272-3215.

Nancy Johnson
Senior Petitions Attorney
Office of Petitions

UNITED STATES PATENT AND TRADEMARK OFFICE

UNITED STATES DEPARTMENT OF COMMERCE
United States Patent and Trademark Office
Address: COMMISSIONER FOR PATENTS
P.O. Box 1450
Alexandria, Virginia 22313-1450
www.uspto.gov

DAVIS WRIGHT TREMAINE, LLP/Seattle
1201 Third Avenue, Suite 2200
SEATTLE, WA 98101-3045

Mail Date: 04/26/2010

Applicant	: Glen John Bertini	: DECISION ON REQUEST FOR
Patent Number	: 7611748	: RECALCULATION of PATENT
Issue Date	: 11/03/2009	: TERM ADJUSTMENT IN VIEW
Application No	: 11/070,390	: OF WYETH AND NOTICE OF INTENT TO
Filed	: 03/01/2005	: ISSUE CERTIFICATE OF CORRECTION
		:

The Request for Recalculation is **GRANTED** to the extent indicated.

The patent term adjustment has been determined to be **1233** days. The USPTO will *sua sponte* issue a certificate of correction reflecting the amount of PTA days determined by the recalculation.

Prior to the issuance of the certificate of correction, the USPTO will afford patentee an opportunity to be heard and request reconsideration. Accordingly, patentee has **one month or thirty (30) days**, whichever is longer, to file a request for reconsideration of this patent term adjustment calculation. See 35 U.S.C. 154(b)(3)(B)(ii) and 37 CFR 1.322(a)(4). No extensions of time will be granted under 37 CFR 1.136.

Patentee should use document code PET.OP if electronically filing a request for reconsideration of this patent term adjustment calculation. The patentee must also include the information required by 37 CFR 1.705(b)(2) and the fee required by 37 CFR 1.18(e). If patentee does not file a timely request for reconsideration of this patent term adjustment calculation including the information required by 37 CFR 1.705(b)(2) and the fee required by 37 CFR 1.18(e), the USPTO will issue a certificate of correction reflecting the PTA determination noted above.

Patentee should be aware that in order to preserve the right to review in the United States District Court for the District of Columbia of the USPTO patent term adjustment determination, patentee must ensure that he or she also take the steps required under 35 U.S.C. 154(b)(4)(A) in a timely manner. Nothing in the request for recalculation should be construed as providing an alternative time frame for commencing a civil action under 35 U.S.C. 154(b)(4)(A).

Any questions concerning this decision should be directed to the Office of Patent Legal Administration at 571-272-7702.

SPE RESPONSE FOR CERTIFICATE OF CORRECTION

Paper No.:20090429

DATE : April 29, 2009

TO SPE OF : ART UNIT 1625

SUBJECT : Request for Certificate of Correction on Patent No.: 7540505

A response is requested with respect to the accompanying request for a certificate of correction.

Please complete this form and return with file, within **7** days to:
Certificates of Correction Branch - ST (South Tower) 9A22
Palm location **7590** - Tel. No. (703) 305-8309

With respect to the change(s) requested, correcting Office and/or Applicant's errors, should the patent read as shown in the certificate of correction? No new matter should be introduced, nor should the scope or meaning of the claims be changed.

Thank You For Your Assistance **Certificates of Correction Branch**

The request for issuing the above-identified correction(s) is hereby:

Note your decision on the appropriated box.

☒ **Approved** All changes apply.

☐ **Approved in Part** Specify below which changes **do not** apply.

☐ **Denied** State the reasons for denial below.

Comments:

/Janet L Andres/
Supervisory Patent Examiner.Art Unit 1625

UNITED STATES PATENT AND TRADEMARK OFFICE

Commissioner for Patents
United States Patent and Trademark Office
P.O. Box 1450
Alexandria, VA 22313-1450
www.uspto.gov

DEC 13 2007

NAVAL RESEARCH LABORATORY
ASSOCIATE COUNCEL (PATENTS)
CODE 1008.2
4555 OVERLOOK AVENUE S.W.
WASHINGTON, DC 20375-5320

In re Application of
:
Shenoy et al.
:
Serial No.: 11/070,398
: PETITION DECISION

Filed: February 28, 2005
:
Attorney Docket No.: 96168-US2
:

This is in response to the petition under 37 CFR § 1.181, filed October 12, 2007, requesting that the finality of the Office action of June 1, 2007 be withdrawn.

BACKGROUND

The history of this case shows that the examiner mailed a non-final Office action on December 12, 2006, setting a three month shortened statutory period for reply. In this action, claims 1-26 were pending, claims 22-26 were withdrawn from consideration on the merits as these claims were directed toward a non-elected invention, and claims 1-21 were examined. Claim 14 was rejected under 35 USC 112 Second paragraph, claims 1-4, 13, 14 and 19-21 were rejected under 35 USC 102(b) as being anticipated by Sugao et al. and claims 1-20 were rejected under 35 USC 102(b) as being anticipated by Yager.

In response to the non-final Office action of December 12, 2006, applicants amended claims 1, 14 and 20, canceled claims 22-26 and added claims 27-37.

The examiner mailed a final Office action on June 1, 2007, setting a three month shortened statutory period for reply. It is noted that a correction is made here; the examiner indicated that claims 1-21 and 27-37 were pending at the time the final Office action was drafted; however, upon review of this case, 1-18, 20-21 and 27-37 were pending at the time the final Office action was drafted. The examiner allowed claims 1-21 and 27; however, claim 19 was cancelled and no longer pending and therefore, as a correction, claims 1-18, 20-21 and 27 were allowed. The examiner rejected claims 28, 32, 34 and 36 under 35 U.S.C. 103 (a) over Sugao et al. and Yager. Additionally, the examiner objected to claims 29-31, 33, 35 and 37 for being dependent upon a rejected base claim. Applicant was notified that if these claims were rewritten in independent form including all of the limitations of the base claim as well as any intervening claims, they would be allowed.

In response to the final Office action of June 1, 2007, applicants filed an amendment after final Office action on August 1, 2007. In this amendment, applicants fulfilled the requirements set forth by the examiner in the final Office action of June 1, 2007 to place claims 29-31, 33, 35 and 37 into condition for allowance. Specifically, applicants canceled claim 29 and amended claim 28 to include all of the limitations of cancelled claim 29. Applicants additionally canceled claim 35 and amended claim 34 to include all of the limitations of canceled claim 35. According to the examiner's comments made in the final Office action mailed on June 1, 2007, the amendment filed after final Office action should have placed all of the pending claims; claims 1-18, 20-21, 27-34 and 36-37, in condition for allowance.

The examiner filed an Advisory action in response to applicants' amendment after final Office action on August 22, 2007 setting a response period expiring on the mailing date set forth in the final rejection. In this advisory action, the examiner indicated that for purposes of appeal, the proposed amendments would be entered. The explanation of the status of the claims according to the examiner was that claims 1-21 and 27 would be allowed (again, as a correction, claim 19 was not pending at this time, and therefore, the claims indicated for allowability should have been recited as 1-18, 20-21 and 27), claims 30, 31, 33 and 37 would be objected to and claims 28, 32, 34 and 36 would be rejected. The reasoning for the proposed rejection of claims 28, 32, 34 and 36 by the examiner was as follows: "given the polymerizable groups taught by Yager, ther [*sic*] is a reasonable expectation that the groups are bound to a solid surface" (see box number 13 under 'Request for Reconsideration/Other' on the Advisory action).

In response thereto, applicants filed this petition on October 12, 2007, requesting that the finality of the Office action of April 20, 2007, as well as the Advisory action of August 22, 2007, be withdrawn in order to reopen prosecution of this case with a new rejection or allowance of all of the pending claims.

DISCUSSION

Applicants argue:

> The amendment of 08/01/2007 merely incorporated objected to claims into their respective independent claims. The amended claims should be allowable over the prior art of record. However, the rejection of claims 28, 32, 34 and 36 is a new ground of rejection. In this situation, any new prior art rejection, whether over art of record or new art, must be a new ground of rejection not necessitated by the amendment. (p. 2, Petition)

First, it is noted that the examiner's comments made in the Advisory action were not a 'new grounds of rejection'. The Advisory action is not an Office action on the merits, but is a means for advising applicants of the appeal process by clearly reporting the status of the claims prior to appeal. It is the Primary examiner's discretion to reject claims which were previously indicated as allowable (see MPEP § 706.04). However, the examiner has indicated in the Advisory action that claims 28, 32, 34 and 38 *will be* rejected over the prior art of record if applicants proceed to file an Appeal Brief. This rejection, if placed in an Examiner's Answer, would be considered a

'new ground of rejection' in that it is clear from the final Office action of June 1, 2007 that claims 28, 32, 34 and 38 would have been allowable if the limitations of any of claims 29-31, 33, 35 or 37 were placed into the independent claims of 28 and 34, respectively (which applicants clearly adhered to in the amendment filed after final rejection). It is pointed out that while a new ground of rejection is permissible in an Examiner's Answer, matters concerning new grounds for rejection in an Examiner's Answer require the approval of a Supervisory Patent examiner (see MPEP § 1102.02 (d), 1207.01 and 1207.04). That is (1) prior to an Examiner's Answer, an Appeal conference must take place, wherein proceeding to Examiner's Answer is approved by two Supervisory Patent examiners (2) the Examiner's Answer is signed by two Supervisory Patent examiners and (3) if applicants wish to reopen prosecution based upon any new ground of rejection, the first Office action on the merits presented after reopening prosecution is only proceeded with Supervisory approval. Therefore, in the instant case, the examiner does not have the authority to indicate that a new grounds of rejection will be made after applicants file an Appeal Brief absent Supervisory approval.

Additionally, it is not permissible to introduce a new ground of rejection of a previously allowed claim in an Examiner's Answer:

> *A new ground of rejection would not be permitted to reject a previously allowed or objected to claim even if the new ground of rejection would rely upon evidence already of record.* In this instance, rather than making a new ground of rejection in an examiner's answer, if the basis for the new ground of rejection was approved by a supervisory patent examiner as currently set forth in MPEP § 1207.04, *the examiner would reopen prosecution* (see MPEP § 1207.03 II) (emphasis added).

Furthermore, the MPEP states:

> Before final rejection is in order *a clear issue* should be developed between the examiner and applicant. To bring the prosecution to as speedy conclusion as possible and at the same time to deal justly by both the applicant and the public, the invention as disclosed and claimed should be thoroughly searched in the first action and the references fully applied; and in reply to this action the applicant should amend with a view to avoiding all the grounds of rejection and objection.... The examiner should never lose sight of the fact that in every case the *applicant is entitled to a full and fair hearing, and that a clear issue between applicant and examiner should be developed, if possible, before appeal* (MPEP § 706.07) (emphasis added)

It is decided that due to the comments made by the examiner in the Advisory action of August 22, 2007, there is no clear issue of record since there has been no formal rejection set forth by the examiner of claims 28, 32, 34 and 36. The comments made in the Advisory action by the examiner which indicated that claims 28, 32, 34 and 36 would be rejected have no basis in the MPEP and were thus inappropriate. Accordingly, the claims are in fact 'in limbo', meaning that they are not rejected (again, examiner's comments present in the Advisory action are not a 'rejection'), and they are not allowed according to the prosecution history. The examiner clearly indicated in the final Office action that these claims would be allowable if any of the objected claims; that is, claims 29-31, 33, 35 or 37 were placed into their respective independent claims

(claims 28 or 34) and has not issued a definitive rejection of claims 28, 32, 34 and 36 based upon the teachings of the prior art. Hence, applicants have *no clear issue for appeal* due to the discrepancies with regard to the status of the claims. Additionally, as stated above, the examiner is not permitted to reject any claim under new grounds in an Examiner's Answer which was previously indicated as allowable. If the examiner wishes to properly place a new ground of rejection over claims 28, 32, 34 and 36, which were previously indicated as being allowable, prosecution is to be reopened.

Applicants' arguments are persuasive that due to the comments made in the Advisory action, the final Office action issued June 1, 2007 was premature and the finality of the Office action will be withdrawn. Withdrawal of the final Office action of June 1, 2007 will render the Advisory action of August 22, 2007 moot.

DECISION

The petition is **GRANTED.**

This application will be forwarded to the examiner for an action not inconsistent with this decision.

Should there be any questions about this decision please contact Marianne C. Seidel, by letter addressed to Director, TC 1600, at the address listed above, or by telephone at 571-272-0584 or by facsimile sent to the general Office facsimile number, 703-872-9306.

John LeGuyader
Director, Technology Center 1600

UNITED STATES PATENT AND TRADEMARK OFFICE

JUN 15 2007

Commissioner for Patents
United States Patent and Trademark Office
P.O. Box 1450
Alexandria, VA 22313-1450
www.uspto.gov

DANA REWOLDT
GARST SEED COMPANY
2369 330TH STREET
PO BOX 500
SLATER IA 50244

In re Application of :
Mike Dragonuk
Serial No.: 11/070,441
Filed: March 1, 2005
Attorney Docket No.: INBRED CORN LINE G7905

: PETITION DECISION

This is in response to the petition under 37 CFR § 1.59(b), filed May 18, 2007, to expunge information from the above identified application. This application has not been allowed.

Petitioner requests that the Reply to Request for Information Under 37 CFR 1.105, and attachment thereto, submitted to the Patent Office on December 29, 2006, be expunged from the record. Petitioner states either: (A) that the information contains trade secret material, proprietary material and/or material that is subject to a protective order which has not been made public; or (B) that the information submitted was unintentionally submitted and the failure to obtain its return would cause irreparable harm to the party who submitted the information or to the party in interest on whose behalf the information was submitted, and the information has not otherwise been made public. The petition fee set forth in 37 CFR § 1.17(g) has been paid.

This is an examined application which is currently under non-final rejection. As such the information provided has been reviewed, in part, but proceedings in the application have not been terminated. As stated in M.P.E.P. 724, upon allowance or other action closing prosecution in an application, petition may be made for return of Proprietary information. The information cannot be expunged at this time.

The petition is **DISMISSED**. Applicant may resubmit the petition subsequent to a Notice of Allowability or *ex parte Quayle* action being mailed in the application. No additional petition fee will be required at that time.

Should there be any questions about this decision please contact Marianne C. Seidel by letter addressed to Director, TC 1600, at the address listed above, or by telephone at 571-272-0584 or by facsimile sent to the general Office facsimile number, 703-872-9306.

Marianne C. Seidel
Quality Assurance Specialist/Program Examiner
Technology Center 1600

UNITED STATES PATENT AND TRADEMARK OFFICE

Commissioner for Patents
United States Patent and Trademark Office
P.O. Box 1450
Alexandria, VA 22313-1450
www.uspto.gov

MORRISON AND FOERSTER, LLP
425 MARKET STREET
SAN FRANCISCO, CA 94105

COPY MAILED

SEP 1 1 2007

OFFICE OF PETITIONS

In re Application of
Gayle L. NOBLE, et al
Application No. 11/070,447
Filed: March 1, 2005
Attorney Docket No. 146712007501

DECISION ON PETITION
TO WITHDRAW
FROM RECORD

This is a decision on the Request to Withdraw as attorney or agent of record under 37 C.F.R. § 1.36(b), filed May 8, 2007.

The request is **DISMISSED** as moot.

A review of the file record indicates that the power of attorney to Morrison and Foerster, LLP has been revoked by the applicant of the patent application on June 29, 2007. Accordingly, the request to withdraw under 37 C.F.R. § 1.36(b) is moot.

The correspondence address of record has been changed and the new correspondence address is the address indicated below.

Telephone inquires concerning this decision should be directed to Diane Goodwyn at 571-272-6735.

April Wise
Petitions Examiner
Office of Petitions

cc: STEPHEN C. DURANT
NOVAK DRUCE & QUIGG LLP
SPEAR STREET TOWER – 35TH FLOOR
ONE MARKET PLAZA
SAN FRANCISCO, CA 94105

UNITED STATES PATENT AND TRADEMARK OFFICE

Commissioner for Patents
United States Patent and Trademark Office
P.O. Box 1450
Alexandria, VA 22313-1450
www.uspto.gov

MORRISON AND FOERSTER, LLP
425 MARKET STREET
SAN FRANCISCO, CA 94105

COPY MAILED

SEP 11 2007

OFFICE OF PETITIONS

In re Application of
Gayle L. NOBLE, et al
Application No. 11/070,447
Filed: March 1, 2005
Attorney Docket No. 146712007501

DECISION ON PETITION TO WITHDRAW FROM RECORD

This is a decision on the Request to Withdraw as attorney or agent of record under 37 C.F.R. § 1.36(b), filed May 8, 2007.

The request is **DISMISSED** as moot.

A review of the file record indicates that the power of attorney to Morrison and Foerster, LLP has been revoked by the applicant of the patent application on June 29, 2007. Accordingly, the request to withdraw under 37 C.F.R. § 1.36(b) is moot.

The correspondence address of record has been changed and the new correspondence address is the address indicated below.

Telephone inquires concerning this decision should be directed to Diane Goodwyn at 571-272-6735.

April Wise
Petitions Examiner
Office of Petitions

cc: STEPHEN C. DURANT
NOVAK DRUCE & QUIGG LLP
SPEAR STREET TOWER – 35TH FLOOR
ONE MARKET PLAZA
SAN FRANCISCO, CA 94105

RECEIVED

SEP 28 2007

OFFICE OF PETITIONS

UNITED STATES PATENT AND TRADEMARK OFFICE

UNITED STATES DEPARTMENT OF COMMERCE
United States Patent and Trademark Office
Address: COMMISSIONER FOR PATENTS
P.O. Box 1450
Alexandria, Virginia 22313-1450
www.uspto.gov

ALSTON & BIRD, LLP
BANK OF AMERICA PLAZA
101 SOUTH TRYON STREET, SUITE 4000
CHARLOTTE, NC 28280-4000

Mail Date: 04/21/2010

Applicant	: Oscar Kipersztok	: DECISION ON REQUEST FOR
Patent Number	: 7644053	: RECALCULATION of PATENT
Issue Date	: 01/05/2010	: TERM ADJUSTMENT IN VIEW
Appliction No	: 11/070,452	: OF WYETH AND NOTICE OF INTENT TO
Filed	: 03/02/2005	: ISSUE CERTIFICATE OF CORRECTION
		:

The Request for Recalculation is **GRANTED** to the extent indicated.

The patent term adjustment has been determined to be **784** days. The USPTO will *sua sponte* issue a certificate of correction reflecting the amount of PTA days determined by the recalculation.

Prior to the issuance of the certificate of correction, the USPTO will afford patentee an opportunity to be heard and request reconsideration. Accordingly, patentee has **one month or thirty (30) days**, whichever is longer, to file a request for reconsideration of this patent term adjustment calculation. See 35 U.S.C. 154(b)(3)(B)(ii) and 37 CFR 1.322(a)(4). No extensions of time will be granted under 37 CFR 1.136.

Patentee should use document code PET.OP if electronically filing a request for reconsideration of this patent term adjustment calculation. The patentee must also include the information required by 37 CFR 1.705(b)(2) and the fee required by 37 CFR 1.18(e). If patentee does not file a timely request for reconsideration of this patent term adjustment calculation including the information required by 37 CFR 1.705(b)(2) and the fee required by 37 CFR 1.18(e), the USPTO will issue a certificate of correction reflecting the PTA determination noted above.

Patentee should be aware that in order to preserve the right to review in the United States District Court for the District of Columbia of the USPTO patent term adjustment determination, patentee must ensure that he or she also take the steps required under 35 U.S.C. 154(b)(4)(A) in a timely manner. Nothing in the request for recalculation should be construed as providing an alternative time frame for commencing a civil action under 35 U.S.C. 154(b)(4)(A).

Any questions concerning this decision should be directed to the Office of Patent Legal Administration at 571-272-7702.

UNITED STATES PATENT AND TRADEMARK OFFICE

Commissioner for Patents
United States Patent and Trademark Office
P.O. Box 1450
Alexandria, VA 22313-1450
www.uspto.gov

Paper No.

LOUIS J. WILLE
BRISTOL-MYERS SQUIBB COMPANY
PATENT DEPARTMENT
P O BOX 4000
PRINCETON NJ 08543-4000

COPY MAILED

FEB 10 2009

OFFICE OF PETITIONS

In re Application of	:	
Feder et al.	:	
Patent No. 7,345,148	:	
Issued: March 18, 2008	:	
Application No. 11/070,456	:	LETTER REGARDING
Filed: March 2, 2005	:	PATENT TERM ADJUSTMENT
Atty Docket No. 1787.016	:	

This letter is in response to the "PETITION TO CORRECT PATENT TERM ADJUSTMENT PERIOD IN GRANTED PATENT 7,345,148 UNDER 37 CFR 1.702(a)(4) and 37 CFR 1.703(a)(1)," filed on March 10, 2008. Applicant requests that the patent term adjustment be reduced by 139 days from 361 days to 222 days. The request is treated as a request pursuant to applicant's duty of good faith and candor to the Office.

The request for review of patent term adjustment is **DISMISSED**.

On March 10, 2008, the above-identified application matured into U.S. Patent No. 7,345,148.

The Patent issued with a revised Patent Term Adjustment of three hundred sixty-one days.

The instant request was filed on March 10, 2008. Applicants state that the Patent Term Adjustment extends the term of the patent by too many days. Specifically, applicants state that the reduction of 120 days of patent term adjustment for the filing of an amendment after the mailing of a notice of allowance on May 4, 2007 is incorrect, as a response to the

amendment after the notice of allowance was mailed on January 18, 2008, or 259 days after the amendment after the mailing of the notice of allowance was filed.

A review of the record reveals that the revised determination of patent term adjustment of 361 days is correct.

37 CFR 1.704(c)(10) states that circumstances that constitute a failure of the applicant to engage in reasonable efforts to conclude processing or examination of an application also include the following circumstances, which will result in the following reduction of the period of adjustment set forth in § 1.703 to the extent that the periods are not overlapping: Submission of an amendment under § 1.312 or other paper after a notice of allowance has been given or mailed, in which case the period of adjustment set forth in § 1.703 shall be reduced by the lesser of: (i) The number of days, if any, beginning on the date the amendment under § 1.312 or other paper was filed and ending on the mailing date of the Office action or notice in response to the amendment under § 1.312 or such other paper; or (ii) Four months.

Therefore, the period of reduction is the *lesser* of the number of days, if any, beginning on the date the amendment under § 1.312 or other paper was filed and ending on the mailing date of the Office action or notice in response to the amendment under § 1.312 or such other paper; or four months.

As the period beginning on the date the paper was filed and ending on the mailing date of the Office action or notice in response to the amendment under 37 CFR 1.312 is greater than four months, the applicable reduction in patent term adjustment is 120 days, or four months.

Thus, the calculations of record at the time of the issuance of the patent are correct. To the extent that applicants are aware of any specific error in the PTA calculation, applicants should so advise the Office.

As this letter was submitted as an advisement to the Office of an error in applicants' favor, the Office will not assess the $200.00 fee under 37 CFR 1.18(e). The fee is being credited to counsel's deposit account. The Office thanks applicants for

their good faith and candor in bringing this to the attention of the Office.

Telephone inquiries specific to this matter should be directed to Douglas I. Wood, Senior Petitions Attorney, at (571) 272-3231.

Nancy Johnson
Senior Petitions Attorney
Office of Petitions

UNITED STATES PATENT AND TRADEMARK OFFICE

Commissioner for Patents
United States Patent and Trademark Office
P.O. Box 1450
Alexandria, VA 22313-1450
www.uspto.gov

Paper No. 012006

LOUIS DUJMICH
OSTROLENK, FABER, GERB & SOFFEN, LLP
1180 AVENUE of the AMERICAS
NEW YORK, NY 10036-8403

JAN 31 2006

In re Application of:	:	
Beski	:	PETITION FOR CORRECTION OF
Serial No.: 11/070,465	:	INVENTORSHIP
Filed: March 2, 2005	:	UNDER 37 CFR § 1.48(a)
Attorney Docket No.: P/8-67	:	

This is a decision on the petition filed January 13, 2006 to correct inventorship under 37 CFR 1.48(a).

The petition is granted.

In view of the papers filed, it has been found that this nonprovisional application, as filed, through error and without deceptive intent, improperly set forth the inventorship, and accordingly, this application has been corrected in compliance with 37 CFR 1.48 (a). The inventorship of this application has been changed by adding the names:

Richard Alex Beski
Susan Marie Verellen
Thomas D. Belanger, Jr.

The application will be forwarded to the Office of Initial Patent Examination (OIPE) for issuance of a corrected filing receipt, and correction of Office records to reflect the inventorship as corrected.

Paula A. Bradley
Supervisory Patent Examiner,
Art Unit 2833

UNITED STATES PATENT AND TRADEMARK OFFICE

Commissioner for Patents
United States Patent and Trademark Office
P.O. Box 1450
Alexandria, VA 22313-1450
www.uspto.gov

FOLEY AND LARDNER LLP
SUITE 500
3000 K STREET NW
WASHINGTON, DC 20007

COPY MAILED

JUN 13 2007

OFFICE OF PETITIONS

In re Application of	:	
MURDIN, Andrew D. et al.	:	
Application No. 11/070,478	:	DECISION ON PETITION
Filed: March 03, 2005	:	TO WITHDRAW
Attorney Docket No. **032931-0268**	:	FROM RECORD

This is a decision on the Request to Withdraw as attorney or agent of record under 37 C.F.R. § 1.36(b), filed March 30, 2007.

The request is **NOT APPROVED** as moot.

A review of the file record indicates that the power of attorney to Foley & Lardner LLP has been revoked by the assignee of the patent application on March 20, 2007. Accordingly, the request to withdraw under 37 C.F.R. § 1.36(b) is moot.

All future communications from the Office will continue to be directed to the below-listed address until otherwise notified by applicant.

Telephone inquires concerning this decision should be directed to Michelle R. Eason at 571-272-4231.

Terri Williams

Terri Williams
Petitions Examiner
Office of Petitions

cc: **SMART & BIGGAR**
P.O. BOX 2999, STATION D
900-55 METCALFE STREET
OTTAWA ON K1P5Y-6 CA CANADA

UNITED STATES PATENT AND TRADEMARK OFFICE

Commissioner for Patents
United States Patent and Trademark Office
P.O. Box 1450
Alexandria, VA 22313-1450
www.uspto.gov

MINTZ, LEVIN, COHN, FERRIS, GLOVSKY AND POPEO, P.C
ONE FINANCIAL CENTER
BOSTON MA 02111

COPY MAILED

JAN 14 2010

In re Patent No. 7,002,511	:	
Issue Date: February 21, 2006	:	
Application No. 11/070,483	:	ON PETITION
Filed: March 2, 2005	:	
Attorney Docket No. 25960-612F01US	:	

This is a notice regarding your request for acceptance of a fee deficiency submission under 37 CFR 1.28. On September 1, 1998, the Court of Appeals for the Federal Circuit held that 37 CFR 1.28(c) is the sole provision governing the time for correction of the erroneous payment of the issue fee as a small entity. **See DH Technology v. Synergystex International, Inc. 154 F.3d 1333, 47 USPQ2d 1865 (Fed. Cir. Sept. 1, 1998).**

The Office no longer investigates or rejects original or reissue applications under 37 CFR 1.56. **1098 Off. Gaz. Pat. Office 502 (January 3, 1989)**. Therefore, nothing in this Notice is intended to imply that an investigation was done.

Your fee deficiency submission under 37 CFR 1.28 is hereby **DISMISSED**.

The request under 37 CFR 1.28 cannot be accepted at this time since it appears that the petition is not signed by a person having authority to act in the above-identified patent.

Petitioner's attention is directed to 37 CFR 1.33(b), which states.

Amendments and other papers, except for written assertions pursuant to § 1.27(c)(2)(ii) of this part, filed in the application must be signed by:

(1) A registered patent attorney or patent agent of record appointed in compliance with § 1.32(b);
(2) A registered patent attorney or patent agent not of record who acts in a representative capacity under the provisions of § 1.34;
(3) An assignee as provided for under §3.71(b) of this chapter; or

(4) All of the applicants (§ 1.41(b)) for patent, unless there is an assignee of the entire interest and such assignee has taken action in the application in accordance with § 3.71 of this chapter.

Accordingly, the request cannot be accepted until it is signed by all inventors, an attorney or agent registered to practice before the U.S. Patent and Trademark Office or the assignee of the entire interest under 37 CFR 3.73(b).

Further correspondence with respect to this matter should be addressed as follows:

By Mail: Mail Stop PETITION
Commissioner for Patents
Post Office Box 1450
Alexandria, VA 22313-1450

By hand: U. S. Patent and Trademark Office
Customer Service Window, Mail Stop Petitions
Randolph Building
401 Dulany Street
Alexandria, VA 22314

The centralized facsimile number is (571) 273-8300.

Telephone inquiries concerning this decision should be directed to the undersigned at (571) 272-7751.

Joan Olszewski

Joan Olszewski
Petitions Examiner
Office of Petitions

UNITED STATES PATENT AND TRADEMARK OFFICE

Commissioner for Patents
United States Patent and Trademark Office
P.O. Box 1450
Alexandria, VA 22313-1450
www.uspto.gov

MINTZ, LEVIN, COHN, FERRIS, GLOVSKY AND POPEO, P.C
ONE FINANCIAL CENTER
BOSTON MA 02111

MAILED

APR 07 2010

OFFICE OF PETITIONS

In re Patent No. 7,002,511	:	
Issue Date: February 21, 2006	:	
Application No. 11/070,483	:	ON PETITION
Filed: March 2, 2005	:	
Attorney Docket No. 25960-612F01US	:	

This is a notice regarding your renewed request for acceptance of a fee deficiency submission under 37 CFR 1.28 filed February 25, 2010. On September 1, 1998, the Court of Appeals for the Federal Circuit held that 37 CFR 1.28(c) is the sole provision governing the time for correction of the erroneous payment of the issue fee as a small entity. **See DH Technology v. Synergystex International, Inc. 154 F.3d 1333, 47 USPQ2d 1865 (Fed. Cir. Sept. 1, 1998).**

The Office no longer investigates or rejects original or reissue applications under 37 CFR 1.56. **1098 Off. Gaz. Pat. Office 502 (January 3, 1989)**. Therefore, nothing in this Notice is intended to imply that an investigation was done.

Your fee deficiency submission under 37 CFR 1.28 is hereby **ACCEPTED**.

This patent is no longer entitled to small entity status. Accordingly, all future fees paid in this patent must be paid at the large entity rate.

Telephone inquiries concerning this decision should be directed to the undersigned at (571) 272-7751.

Joan Olszewski

Joan Olszewski
Petitions Examiner
Office of Petitions

SPE RESPONSE FOR CERTIFICATE OF CORRECTION

DATE : 1/24/07

Paper No.: ——

TO SPE OF : ART UNIT 2611

SUBJECT : Request for Certificate of Correction for Appl. No.: 11/070485 Patent No.: 7120193B2

Please respond to this request for a certificate of correction within 7 days.

Please review the requested changes/corrections as shown in the **COCIN** document(s) in the IFW application image. No new matter should be introduced, nor should the scope or meaning of the claims be changed.

Please complete the response (see below) and forward the completed response to scanning using document code **COCX**.

Virginia Tolbert

Certificates of Correction Branch

703-308-9390 ext. 113

Thank You For Your Assistance

The request for issuing the above-identified correction(s) is hereby:

Note your decision on the appropriate box.

- [x] **Approved** — **All** changes apply.
- [ ] **Approved in Part** — Specify below which changes **do not** apply.
- [ ] **Denied** — State the reasons for denial below.

Comments: _____

Shawang Tsai — SPE

2611 — Art Unit

PTOL-306 (REV. 7/03)

U.S. DEPARTMENT OF COMMERCE Patent and Trademark Office

PTO/SB/44 (04-05)
Approved for use through 04/30/2007. OMB 0651-0033
U.S. Patent and Trademark Office; U.S. DEPARTMENT OF COMMERCE
Under the Paperwork Reduction Act of 1995, no persons are required to respond to a collection of information unless it displays a valid OMB control number.
(Also Form PTO-1050)

UNITED STATES PATENT AND TRADEMARK OFFICE
CERTIFICATE OF CORRECTION

PATENT NO. : 7,120,193

APPLICATION NO.: 11/070,485

ISSUE DATE : October 10, 2006

INVENTOR(S) : Ibragimov et al.

It is certified that an error appears or errors appear in the above-identified patent and that said Letters Patent is hereby corrected as shown below:

At the cover page, at (74) Attorney, Agent, or firm, please delete "Vedder, Price, Kaufman & Kammholz" and insert –Vedder, Price, Kaufman & Hammholz, P.C.--;
At patent column 2, line 4, please delete "(discrete-time adaptation case)", and insert -- (discrete-time adaptation case)--;
At patent column 2, line 29, please correct to read --component on the feedback data path. Further, when an--;
At patent column 2, line 56, please correct to read --circuitry, processes the post-slicer signal in response to at--;
At patent column 2, line 59, please correct to read --coupled to the signal slicing circuitry, delays and processes--;
At patent column 7, line 1, please correct to read --The update equation for r can also be simplified to (if it is--;
At patent column 8, line 2, please correct to read --their respective time-delayed signals 111a, 111b, ...--;
At patent column 8, line 41 please delete "Can" and insert --Cna--;
At patent column 9, line 7, please delete "signal" and insert --signals--;
At patent column 12, line 23, please delete "r";
At patent column 13, line 20, please correct to read --Multi-tap fat tap with superlinear interpolation--;
At patent column 13, line 46, please correct to read --Fat tap with gain offset--;
At patent column 14, line 29, please correct to read --interpolating mixer--;
At patent column 14, line 37, please delete "{ci}i=0L", and insert -- --;
At patent column 16, line 51, please delete "patent application Ser.", and insert --Patent Application No.--;
At patent column 16, lines 61-62, please delete "patent application Ser.", and insert --Patent Application--;
At patent column 17, line 34, please delete "patent application Ser." and insert --Patent Application--;
At patent column 17, line 40, please delete "patent application Ser." and insert --Patent Application--;
At patent column 17, line 45, please delete "DEE" and insert --DFE--;
At patent column 17, line 67, please delete "vain" and insert --gain--;
At patent column 18, line 2, please delete "patent application Ser." and insert --Patent Application--;
At patent column 18, line 54, please delete "patent application Ser." and insert --Patent Application--;
At patent column 19, claim 1, line 29, please delete "one" and insert --a first--;
At patent column 19, claim 1, lines 42-43, please delete "at least one and plurality of adaptation control signals, and includes", and insert --said first and plurality of adaptation control signals, and includes--;

MAILING ADDRESS OF SENDER (Please do not use customer number below):

Mark A. Dalla Valle
Vedder, Price, Kaufman & Kammholz, P.C.
222 North LaSalle Street, 24th Floor, Chicago, IL 60601

This collection of information is required by 37 CFR 1.322, 1.323, and 1.324. The information is required to obtain or retain a benefit by the public which is to file (and by the USPTO to process) an application. Confidentiality is governed by 35 U.S.C. 122 and 37 CFR 1.14. This collection is estimated to take 1.0 hour to complete, including gathering, preparing, and submitting the completed application form to the USPTO. Time will vary depending upon the individual case. Any comments on the amount of time you require to complete this form and/or suggestions for reducing this burden, should be sent to the Chief Information Officer, U.S. Patent and Trademark Office, U.S. Department of Commerce, P.O. Box 1450, Alexandria, VA 22313-1450. DO NOT SEND FEES OR COMPLETED FORMS TO THIS ADDRESS. **SEND TO: Attention Certificate of Corrections Branch, Commissioner for Patents, P.O. Box 1450, Alexandria, VA 22313-1450.**

If you need assistance in completing the form, call 1-800-PTO-9199 and select option 2.

PTO/SB/44 (04-05)
Approved for use through 04/30/2007. OMB 0651-0033
U.S. Patent and Trademark Office; U.S. DEPARTMENT OF COMMERCE
Under the Paperwork Reduction Act of 1995, no persons are required to respond to a collection of information unless it displays a valid OMB control number.
(Also Form PTO-1050)

UNITED STATES PATENT AND TRADEMARK OFFICE
CERTIFICATE OF CORRECTION

PATENT NO. : 7,120,193

APPLICATION NO.: 11/070,485

ISSUE DATE : October 10, 2006

INVENTOR(S) : Ibragimov et al.

It is certified that an error appears or errors appear in the above-identified patent and that said Letters Patent is hereby corrected as shown below:

At patent column 19, claim 1, lines 51-52, please delete "said at least one and plurality of adaptation control signals, and includes" and insert --said first and plurality of adaptation control signals, and includes--;
At patent column 19, claim 1, line 61, please delete "at least one" and insert --first--;
At patent column 19, claim 2, line 66, please delete "at least one" and insert --first--;
At patent column 20, claim 3, line 16, please delete "one" and insert --a first--;
At patent column 20, claim 3, line 28, please delete "at least one" and insert --first--;
At patent column 20, claim 3, line 34, please delete "tuning" and insert --timing--;
At patent column 20, claim 3, line 42, please delete "at least one" and insert --first--;
At patent column 20, claim 4, lines 52-53, please delete "at least one" and insert --first--;
At patent column 20, claim 5, line 57, please delete "at least one" and insert --first--;
At patent column 21, claim 6, line 2, please delete "one" and insert --a first--;
At patent column 21, claim 6, line 12, please delete "at least one" and insert --first--; and
At patent column 22, claim 6, line 10, please delete "at least one" and insert --first--.

MAILING ADDRESS OF SENDER (Please do not use customer number below):

Mark A. Dalla Valle
Vedder, Price, Kaufman & Kammholz, P.C.
222 North LaSalle Street, 24th Floor, Chicago, IL 60601

This collection of information is required by 37 CFR 1.322, 1.323, and 1.324. The information is required to obtain or retain a benefit by the public which is to file (and by the USPTO to process) an application. Confidentiality is governed by 35 U.S.C. 122 and 37 CFR 1.14. This collection is estimated to take 1.0 hour to complete, including gathering, preparing, and submitting the completed application form to the USPTO. Time will vary depending upon the individual case. Any comments on the amount of time you require to complete this form and/or suggestions for reducing this burden, should be sent to the Chief Information Officer, U.S. Patent and Trademark Office, U.S. Department of Commerce, P.O. Box 1450, Alexandria, VA 22313-1450. DO NOT SEND FEES OR COMPLETED FORMS TO THIS ADDRESS. **SEND TO: Attention Certificate of Corrections Branch, Commissioner for Patents, P.O. Box 1450, Alexandria, VA 22313-1450.**

If you need assistance in completing the form, call 1-800-PTO-9199 and select option 2.

20

Attorney Docket No. T9214.C

IN THE UNITED STATES PATENT AND TRADEMARK OFFICE

APPLICANT:	OREN V. PETERSON	
TITLE:	THERMAL SYNTHESIS PRODUCTION OF STEEL	
SERIAL NO.:	11/070527	
FILED:	March 1, 2005	PETITION TO MAKE SPECIAL
EXAMINER:		
ART UNIT:	1742	

Commissioner for Patents
P.O. Box 1450
Alexandria, Virginia 22313-1450

Sir:

This petition to make special is filed under 37 C.F.R. § 1.102 and MPEP § 708.02 (IV), for the purpose of expediting examination of the above-captioned application.

Fee

No fee is required as set forth in 37 C.F.R. § 1.102(c).

CERTIFICATE OF EXPRESS MAILING

DATE OF MAILING March 1, 2005 EXPRESS MAIL LABEL NO: EU 985037290 US

I hereby certify that this paper or fee is being deposited with the United States Postal Service "Express Mail Post Office to Addressee" service on the date indicated above and is addressed to: Commissioner for Patents, P.O. Box 1450, Alexandria, Virginia 22313-1450.

Karl R. Cannon
Attorney Registration No. 36,468
Attorney for Applicant

PETITION GRANTED

Richard Crispino
Special Program Examiner
TC 1700

APR 27 2005

UNITED STATES PATENT AND TRADEMARK OFFICE

UNITED STATES DEPARTMENT OF COMMERCE
United States Patent and Trademark Office
Address: COMMISSIONER FOR PATENTS
P.O. Box 1450
Alexandria, Virginia 22313-1450
www.uspto.gov

ALSTON & BIRD LLP
BANK OF AMERICA PLAZA
101 SOUTH TRYON STREET, SUITE 4000
CHARLOTTE, NC 28280-4000

Mail Date: 04/21/2010

Applicant	: Hendrik Tiemeier	: DECISION ON REQUEST FOR
Patent Number	: 7585445	: RECALCULATION of PATENT
Issue Date	: 09/08/2009	: TERM ADJUSTMENT IN VIEW
Appliction No	: 11/070,557	: OF WYETH AND NOTICE OF INTENT TO
Filed	: 03/02/2005	: ISSUE CERTIFICATE OF CORRECTION
		:

The Request for Recalculation is **GRANTED** to the extent indicated.

The patent term adjustment has been determined to be **1063** days. The USPTO will *sua sponte* issue a certificate of correction reflecting the amount of PTA days determined by the recalculation.

Prior to the issuance of the certificate of correction, the USPTO will afford patentee an opportunity to be heard and request reconsideration. Accordingly, patentee has **one month or thirty (30) days**, whichever is longer, to file a request for reconsideration of this patent term adjustment calculation. See 35 U.S.C. 154(b)(3)(B)(ii) and 37 CFR 1.322(a)(4). No extensions of time will be granted under 37 CFR 1.136.

Patentee should use document code PET.OP if electronically filing a request for reconsideration of this patent term adjustment calculation. The patentee must also include the information required by 37 CFR 1.705(b)(2) and the fee required by 37 CFR 1.18(e). If patentee does not file a timely request for reconsideration of this patent term adjustment calculation including the information required by 37 CFR 1.705(b)(2) and the fee required by 37 CFR 1.18(e), the USPTO will issue a certificate of correction reflecting the PTA determination noted above.

Patentee should be aware that in order to preserve the right to review in the United States District Court for the District of Columbia of the USPTO patent term adjustment determination, patentee must ensure that he or she also take the steps required under 35 U.S.C. 154(b)(4)(A) in a timely manner. Nothing in the request for recalculation should be construed as providing an alternative time frame for commencing a civil action under 35 U.S.C. 154(b)(4)(A).

Any questions concerning this decision should be directed to the Office of Patent Legal Administration at 571-272-7702.

UNITED STATES PATENT AND TRADEMARK OFFICE

UNITED STATES DEPARTMENT OF COMMERCE
United States Patent and Trademark Office
Address: COMMISSIONER FOR PATENTS
P.O. Box 1450
Alexandria, Virginia 22313-1450
www.uspto.gov

DOW AGROSCIENCES LLC
9330 ZIONSVILLE ROAD
INDIANAPOLIS, IN 46268

Mail Date: 04/21/2010

Applicant	: Timothy Denver Hey	: DECISION ON REQUEST FOR
Patent Number	: 7605228	: RECALCULATION of PATENT
Issue Date	: 10/20/2009	: TERM ADJUSTMENT IN VIEW
Appliction No	: 11/070,573	: OF WYETH AND NOTICE OF INTENT TO
Filed	: 03/02/2005	: ISSUE CERTIFICATE OF CORRECTION
		:

The Request for Recalculation is **GRANTED** to the extent indicated.

The patent term adjustment has been determined to be **636** days. The USPTO will *sua sponte* issue a certificate of correction reflecting the amount of PTA days determined by the recalculation.

Prior to the issuance of the certificate of correction, the USPTO will afford patentee an opportunity to be heard and request reconsideration. Accordingly, patentee has **one month or thirty (30) days**, whichever is longer, to file a request for reconsideration of this patent term adjustment calculation. See 35 U.S.C. 154(b)(3)(B)(ii) and 37 CFR 1.322(a)(4). No extensions of time will be granted under 37 CFR 1.136.

Patentee should use document code PET.OP if electronically filing a request for reconsideration of this patent term adjustment calculation. The patentee must also include the information required by 37 CFR 1.705(b)(2) and the fee required by 37 CFR 1.18(e). If patentee does not file a timely request for reconsideration of this patent term adjustment calculation including the information required by 37 CFR 1.705(b)(2) and the fee required by 37 CFR 1.18(e), the USPTO will issue a certificate of correction reflecting the PTA determination noted above.

Patentee should be aware that in order to preserve the right to review in the United States District Court for the District of Columbia of the USPTO patent term adjustment determination, patentee must ensure that he or she also take the steps required under 35 U.S.C. 154(b)(4)(A) in a timely manner. Nothing in the request for recalculation should be construed as providing an alternative time frame for commencing a civil action under 35 U.S.C. 154(b)(4)(A).

Any questions concerning this decision should be directed to the Office of Patent Legal Administration at 571-272-7702.

UNITED STATES PATENT AND TRADEMARK OFFICE

Commissioner for Patents
United States Patent and Trademark Office
P.O. Box 1450
Alexandria, VA 22313-1450
www.uspto.gov

DEPARTMENT OF THE AIR FORCE
AFMC LO/JAZ
BLDG. 11, Room D18
WRIGHT-PATTERSON AFB, OH 45433-7109

COPY MAILED
NOV 19 2008

In re Application of	:	
Gary H. Kaufman, et. al.	:	
Application No. 11/070,576	:	ON PETITION
Filed: February 25, 2005	:	
Attorney Docket No. AFD 700	:	

This is a decision on the petition under 37 CFR 1.137(b), filed on September 16, 2008, to revive the above-identified application.

The above application became abandoned for failure to file a reply to the Notice of Allowance and Fee(s) Due mailed on May 14, 2008. A Notice of Abandonment was mailed September 8, 2008.

The petition satisfies the requirements of 37 CFR 1.137(b) in that petitioner has supplied (1) the reply in the form of $1,440 for payment of the issue fee; (2) the petition fee of $1,540; and (3) a proper statement of unintentional delay. Therefore, the petition is **GRANTED**.

This application file is being referred to the Office of Data Management for further processing into a patent.

Telephone inquiries concerning this decision should be directed to the undersigned at (571) 272-3226.

Andrea Smith
Petitions Examiner
Office of Petitions

UNITED STATES PATENT AND TRADEMARK OFFICE

Commissioner for Patents
United States Patent and Trademark Office
P.O. Box 1450
Alexandria, VA 22313-1450
www.uspto.gov

TEXAS INSTRUMENTS INCORPORATED
M/S 3999
P O BOX 655474
DALLAS TX 75265

MAILED

NOV 09 2009

OFFICE OF PETITIONS

In re Application of	:	
David G. FARBER et al.	:	
Application No. 11/070,593	:	DECISION ON PETITION
Filed: March 02, 2005	:	
Attorney Docket No. TI-38636	:	

This is a decision on the petition, filed July 02, 2009, which is being treated as a petition under 37 CFR 1.181 (no fee) requesting withdrawal of the holding of abandonment in the above-identified application.

The petition is **DISMISSED**.

Any request for reconsideration of this decision should be filed within two (2) months from the mail date of this decision. *Note* 37 CFR 1.181(f). The request for reconsideration should include a cover letter and be entitled as a "Renewed Petition under 37 CFR 1.181 to Withdraw the Holding of Abandonment."

This application was held abandoned for failure to timely file corrected drawings on or before April 05, 2009, as required by the Notice of Allowance and Fee(s) Due (Notice), mailed January 05, 2009.

Petitioner asserts that the box "5. CORRECTED DRAWINGS" on the Notice was inadvertently checked through Office error. The Examiner's Amendment/Comment attached to the Notice did not include any requirements for changes to the drawings.

As per 35 U.S.C. 133 and 37 CFR 1.135, the applicants are required to timely respond to all of the requirements set forth by an Office Action. In this instance the applicants should have timely traversed the requirement to file the corrected drawings. However, the applicants failed to timely respond to the corrected drawings requirement. Accordingly, the petition to withdraw the holding of abandonment is **dismissed**.

Petitioner should consider filing a petition under 37 CFR 1.137(b) stating that the delay was unintentional. Public Law 97-247, § 3, 96 Stat. 317 (1982), which revised patent and trademark fees, amended 35 U.S.C. § 41(a)(7) to provide for the revival of an "unintentionally" abandoned application without a showing that the delay in prosecution or in late payment of the issue fee was "unavoidable." This amendment to 35 U.S.C. § 41(a)(7) has been implemented in 37 CFR 1.137(b). An "unintentional" petition under 37 CFR 1.137(b) must be accompanied by the $1,620.00 petition fee.

The filing of a petition under 37 CFR 1.137(b) cannot be intentionally delayed and therefore must be filed promptly. A person seeking revival due to unintentional delay cannot make a statement that the delay was unintentional unless the entire delay, including the date it was discovered that the application was abandoned until the filing of the petition to revive under 37 CFR 1.137(b), was unintentional. A statement that the delay was unintentional is not appropriate if petitioner intentionally delayed the filing of a petition for revival under 37 CFR 1.137(b).

Further correspondence with respect to this matter should be addressed as follows:

By Mail: Mail Stop PETITION
Commissioner for Patents
P. O. Box 1450
Alexandria, VA 22313-1450

By hand: U. S. Patent and Trademark Office
Customer Service Window, Mail Stop Petitions
Randolph Building
401 Dulany Street
Alexandria, VA 22314

By facsimile: **(571) 273-8300**
Attn: Office of Petitions

Telephone inquiries concerning this decision should be directed to Niketa I. Patel at 571-272-4156 or in her absence, the undersigned at 571-272-7099.

David A. Bucci
Petitions Examiner
Office of Petitions

UNITED STATES PATENT AND TRADEMARK OFFICE

Commissioner for Patents
United States Patent and Trademark Office
P.O. Box 1450
Alexandria, VA 22313-1450
www.uspto.gov

TEXAS INSTRUMENTS INCORPORATED
P O BOX 655474, M/S 3999
DALLAS TX 75265

COPY MAILED
FEB 08 2010

In re Application of	:	
David G. FARBER et al	:	
Application No. 11/070,593	:	ON PETITION
Filed: March 2, 2005	:	
Attorney Docket TI-38636	:	

This is a decision on the petition under 37 CFR 1.137(b), filed December 21, 2009, to revive the above-identified application.

The petition is **GRANTED**.

The application became abandoned for failure to submit replacement drawings in a timely manner in reply to the Notice of Allowability mailed January 5, 2009, which set a period for reply of three (3) months. Accordingly, this application became abandoned on April 6, 2009.

The petition satisfies the conditions for revival pursuant to the provisions of 37 CFR 1.137(b) in that (1) the reply in the form of replacement drawings (2) the petition fee of $1620; and (3) the required statement of unintentional delay have been received. Accordingly, the reply to the Notice of Allowability of January 5, 2009 is accepted as having been unintentionally delayed.

Telephone inquiries concerning this decision should be directed to Olisa Anwah at (571) 272-6051 or in his absence, the undersigned at (571) 272-7099.

This application is being referred to the Office of Data Management for processing into a patent.

David Bucci
Petitions Examiner
Office of Petitions

UNITED STATES PATENT AND TRADEMARK OFFICE

Commissioner for Patents
United States Patent and Trademark Office
P.O. Box 1450
Alexandria, VA 22313-1450
www.uspto.gov

OLIFF & BERRIDGE PLC
P O BOX 19928
ALEXANDRIA, VA 22320

COPY MAILED
NOV 21 2006
OFFICE OF PETITIONS

In re Application of	:
Osamu Isaji	:
Application No. 11/070,601	: DECISION GRANTING PETITION
Filed: March 3, 2005	: UNDER 37 CFR 1.313(c)(2)
Attorney Docket No. 123035	:

This is a decision on the petition, filed November 20, 2006, under 37 CFR 1.313(c)(2) to withdraw the above-identified application from issue after payment of the issue fee.

The petition is **GRANTED**.

The above-identified application is withdrawn from issue for consideration of a submission under 37 CFR 1.114 (request for continued examination). See 37 CFR 1.313(c)(2).

Petitioner is advised that the issue fee paid on November 9, 2006 in the above-identified application cannot be refunded. If, however, the above-identified application is again allowed, petitioner may request that it be applied towards the issue fee required by the new Notice of Allowance.[1]

Telephone inquiries should be directed to the undersigned at (571) 272-3218.

This matter is being referred to Technology Center AU 3662 for processing of the request for continued examination under 37 CFR 1.114 and for consideration of a concurrently filed Information Disclosure Statement.

Frances Hicks
Petitions Examiner
Office of Petitions

C:\Documents and Settings\FHicks\My Documents\470\NOV10\070601.wpd

---

[1] *The request to apply the issue fee to the new Notice may be satisfied by completing and returning the new Part B – Fee(s) Transmittal Form (along with any balance due at the time of submission). Petitioner is advised that the Issue Fee Transmittal Form must be completed and timely submitted to avoid abandonment.*

UNITED STATES PATENT AND TRADEMARK OFFICE

Commissioner for Patents
United States Patent and Trademark Office
P.O. Box 1450
Alexandria, VA 22313-1450
www.uspto.gov

COPY MAILED

JUN 05 2009

OFFICE OF PETITIONS

Cozen O'Connor, P.C.
1900 Market Street
Philadelphia, PA 91903-3508

In re Application of	:	
Rangarajan Sampath et al.	:	
Application No. 11/070,632	:	DECISION ON PETITION
Filed: March 2, 2005	:	TO WITHDRAW
Attorney Docket No. IBIS0070-100 (DIBIS-0054US1)	:	FROM RECORD

This is a decision on the Request to Withdraw as attorney or agent of record under 37 C.F.R. § 1.36(b), filed October 26, 2005.

The request is **moot because a revocation of power of attorney has been filed**.

A review of the file record indicates that the power of attorney to Paul K. Legaard and all attorneys/agents of record has been revoked by the assignee of the patent application on January 3, 2006 and resubmitted on March 28, 2006. Accordingly, the request to withdraw under 37 C.F.R. § 1.36(b) is moot.

All future communications from the Office will continue to be directed to the below-listed address until otherwise notified by applicant.

Telephone inquires concerning this decision should be directed to Kimberly Inabinet at 571-272-4618.

Kimberly Inabinet
Petitions Examiner
Office of Petitions

cc: Casimir Jones, S.C.
440 Science Drive
SUITE 203
Madison WI 53711

UNITED STATES PATENT AND TRADEMARK OFFICE

Commissioner for Patents
United States Patent and Trademark Office
P.O. Box 1450
Alexandria, VA 22313-1450
www.uspto.gov

VOLPE AND KOENIG, P.C.
UNITED PLAZA, SUITE 1600
30 SOUTH 17TH STREET
PHILADELPHIA PA 19103

COPY MAILED

OCT 17 2008

OFFICE OF PETITIONS

In re Patent No. 7,210,567	:	
Issue Date: May 1, 2007	:	
Application No. 11/070,641	:	ON PETITION
Filed: March 2, 2005	:	
Attorney Docket No. SIB-PT003	:	

This is a decision on the request filed April 22, 2008, which is being treated as a request under 37 CFR 3.81(b)[1] to correct the name of the assignee on the front page of the above-identified patent by way of a Certificate of Correction.

The request is **GRANTED**.

Telephone inquiries concerning this decision may be directed to the undersigned at (571) 272-3208. Inquiries regarding the issuance of a certificate of correction should be directed to the Certificate of Correction Branch at (571) 272-4200.

The Certificates of Correction Branch will be notified of this decision granting the petition under 37 CFR 3.81(b) and directing issuance of the requested Certificate of Correction.

Karen Creasy

Karen Creasy
Petitions Examiner
Office of Petitions

---

[1] *See* MPEP 1309, subsection II; and Official Gazette of June 22, 2004.

UNITED STATES PATENT AND TRADEMARK OFFICE

Commissioner for Patents
United States Patent and Trademark Office
P.O. Box 1450
Alexandria, VA 22313-1450
www.uspto.gov

COPY MAILED

JAN 0 4 2007

OFFICE OF PETITIONS

PATENTS+TMS, P.C.
2849 W. ARMITAGE AVE.
CHICAGO IL 60647

In re Application of
ZURAVEL, et al.
Application No. 11/070,644
Filed: March 2, 2005
Attorney Docket No. BSR-P-05-001

DECISION ON PETITION TO WITHDRAW FROM RECORD

This is a decision on the Request to Withdraw as attorney or agent of record under 37 C.F.R. § 1.36(b), filed October 27, 2006.

The request is **APPROVED**.

A grantable request to withdraw as attorney/agent of record must be signed by every attorney/agent seeking to withdraw or contain a clear indication that one attorney is signing on behalf of another/others. A request to withdraw will not be approved unless at least 30 (thirty) days would remain between the date of approval and the later of the expiration date of a time to file a response or the expiration date of the maximum time period which can be extended under 37 C.F.R. § 1.136(a).

The request was signed by Brian Mattson, the sole attorney of record. Brian Mattson has been withdrawn as attorney or agent of record. Applicant is reminded that there is no attorney of record at this time.

All future correspondence will be directed to the first named inventor Vladimir Zuravel at the address indicated below. Telephone inquiries concerning this decision should be directed to the undersigned at 571-272-7253.

Monica A. Graves
Petitions Examiner
Office of Petitions

cc: **VLADIMIR ZURAVEL**
5536 NORTH SHERIDAN ROAD, APT 114
CHICAGO, IL 60640

cc: **BRADLEY SNOWER**
6933 N. KEDZIE AVENUE, APT 809
CHICAGO, IL 60645

UNITED STATES PATENT AND TRADEMARK OFFICE

Commissioner for Patents
United States Patent and Trademark Office
P.O. Box 1450
Alexandria, VA 22313-1450
www.uspto.gov

Paper No.

Michael A. O'Neil
Michael A. O'Neil, P.C.
Suite 820
5949 Sherry Lane
Dallas, TX 75225

COPY MAILED
JUN 08 2006
OFFICE OF PETITIONS

In re Application of	:	
Lucido et al.	:	DECISION ON
Application No. 11/070,649	:	PETITION
Filed: March 2, 2005	:	
Atty Docket No. 79123-1135	:	

This is in response to the "PETITION RESPONSIVE TO THE NOTICE REGARDING DRAWINGS," filed February 14, 2006. The petition, in effect, requests that the requirement for corrected drawings be withdrawn.

The petition is **GRANTED**.

The above-identified application was filed on March 2, 2005, with 45 sheets of drawings. On February 3, 2006, the Office mailed a Notice Regarding Drawings, requiring corrected drawings due to objections to figures 5-79. The Notice set a non-extendable two-month period for response.

Applicant timely responded with the instant petition, asserting that corrected drawings are not required as figures 5 through 79 were in compliance with the requirements of 37 CFR 1.84(l) as submitted. Further, applicant argued that the drawings at issue were previously accepted in 3 applications (all currently issued as patents).

Petitioner's arguments have been considered and found persuasive. In this instance, and upon consultation with the Publishing Division, it has been determined that the March 2,

2005 drawings will be accepted. In effect, the Notice Regarding Drawings mailed February 23, 2006 is withdrawn.

This application has been referred to the Publishing Division for issuance as a patent.

Telephone inquiries related to this decision may be directed to the undersigned at (571) 272-3219.

Nancy Johnson
Senior Petitions Attorney
Office of Petitions

UNITED STATES PATENT AND TRADEMARK OFFICE

Commissioner for Patents
United States Patent and Trademark Office
P.O. Box 1450
Alexandria, VA 22313-1450
www.uspto.gov

Paper No.

Michael A. O'Neil
Michael A. O'Neil, P.C.
Suite 820
5949 Sherry Lane
Dallas, TX 75225

COPY MAILED
JUN 08 2006
OFFICE OF PETITIONS

In re Application of	:	
Lucido et al.	:	DECISION ON
Application No. 11/070,649	:	PETITION
Filed: March 2, 2005	:	
Atty Docket No. 79123-1135	:	

This is in response to the "PETITION RESPONSIVE TO THE NOTICE REGARDING DRAWINGS," filed February 14, 2006. The petition, in effect, requests that the requirement for corrected drawings be withdrawn.

The petition is **GRANTED**.

The above-identified application was filed on March 2, 2005, with 45 sheets of drawings. On February 3, 2006, the Office mailed a Notice Regarding Drawings, requiring corrected drawings due to objections to figures 5-79. The Notice set a non-extendable two-month period for response.

Applicant timely responded with the instant petition, asserting that corrected drawings are not required as figures 5 through 79 were in compliance with the requirements of 37 CFR 1.84(l) as submitted. Further, applicant argued that the drawings at issue were previously accepted in 3 applications (all currently issued as patents).

Petitioner's arguments have been considered and found persuasive. In this instance, and upon consultation with the Publishing Division, it has been determined that the March 2,

2005 drawings will be accepted. In effect, the Notice Regarding Drawings mailed February 23, 2006 is withdrawn.

This application has been referred to the Publishing Division for issuance as a patent.

Telephone inquiries related to this decision may be directed to the undersigned at (571) 272-3219.

Nancy Johnson
Senior Petitions Attorney
Office of Petitions

UNITED STATES PATENT AND TRADEMARK OFFICE

Commissioner for Patents
United States Patent and Trademark Office
P.O. Box 1450
Alexandria, VA 22313-1450
www.uspto.gov

COPY MAILED

AUG 03 2009

OFFICE OF PETITIONS

PILLSBURY WINTHROP SHAW PITTMAN, LLP
P.O. BOX 10500
MCLEAN VA 22102

In re Application of	:	
Keith Laidler et al	:	
Application No. 11/070,673	:	DECISION ON PETITION
Filed: March 3, 2005	:	UNDER 37 CFR 1.313(c)(1)
Attorney Docket No. 040432-0314786	:	

This is a decision on the petition filed July 31, 2009 which is being treated under 37 CFR 1.313(c), to withdraw the above-identified application from issue after payment of the issue fee.

The petition is **DISMISSED**.

37 CFR 1.313(c) provides that:

Once the issue fee has been paid, the application will not be withdrawn from issue upon petition by the applicant for any reason except:

(1) Unpatentability of one of more claims, which petition must be accompanied by an unequivocal statement that one or more claims are unpatentable, an amendment to such claim or claims, and an explanation as to how the amendment causes such claim or claims to be patentable;

(2) Consideration of a request for continued examination in compliance with 37 CFR 1.114; or

(3) Express abandonment of the application. Such express abandonment may be in favor of a continuing application.

Upon payment of the issue fee, an application will not be withdrawn from issue upon petition except for the reasons enumerated in 37 CFR 1.313(c). The petition submitted on July 31, 2009 is **not** in compliance with any of the above.

For the reason stated above, the petition under 37 CFR 1.313(c) cannot be granted.

Petitioner is reminded that the filing of any renewed petition to withdraw from issue may not be recognized or effective if not received by the appropriate deciding official in time to act prior to issuance. *Note* 37 CFR 1.313(d). It is recommended that the facsimile number listed below be used to file the renewed petition.

Further correspondence with respect to this matter should be addressed as follows:

By mail: Mail Stop PETITIONS
Commissioner for Patents
Post Office Box 1450
Alexandria, VA 22313-1450

By hand: Customer Service Window
Mail Stop Petitions
Randolph Building
401 Dulany Street
Alexandria, VA 22314

By fax: **(571) 273-0025**
Office of Petitions

Any questions concerning this matter may be directed to the undersigned at (571) 272-3208.

/KOC/
Karen Creasy
Petitions Examiner
Office of Petitions

UNITED STATES PATENT AND TRADEMARK OFFICE

Commissioner for Patents
United States Patent and Trademark Office
P.O. Box 1450
Alexandria, VA 22313-1450
www.uspto.gov

PILLSBURY WINTHRO SHAW PITTMAN, LLP0
P.O. BOX 10500
MCLEAN VA 22102

COPY MAILED

AUG 0 3 2009

OFFICE OF PETITIONS

In re Application of	:	
Keith Laidler et al	:	
Application No. 11/070,673	:	DECISION GRANTING PETITION
Filed: March 3, 2005	:	UNDER 37 CFR 1.313(c)(2)
Attorney Docket No. 040432-0314786	:	

This is a decision on the petition under 37 CFR 1.313(c)(2), filed August 3, 2009, to withdraw the above-identified application from issue after payment of the issue fee.

The petition is **GRANTED**.

The above-identified application is withdrawn from issue for consideration of a submission under 37 CFR 1.114 (request for continued examination). *See* 37 CFR 1.313(c)(2).

Petitioner is advised that the issue fee paid on January 5, 2009 cannot be refunded. If, however, this application is again allowed, petitioner may request that it be applied towards the issue fee required by the new Notice of Allowance.[1]

Telephone inquiries should be directed to the undersigned at (571) 272-3208.

This application is being referred to Technology Center AU 3754 for processing of the request for continued examination under 37 CFR 1.114.

/Karen Creasy/
Karen Creasy
Petitions Examiner
Office of Petitions

---

[1] *The request to apply the issue fee to the new Notice may be satisfied by completing and returning the new Part B – Fee(s) Transmittal Form (along with any balance due at the time of submission). Petitioner is advised that the Issue Fee Transmittal Form* ***must*** *be completed and timely submitted to avoid abandonment of the application.*

UNITED STATES PATENT AND TRADEMARK OFFICE

Commissioner for Patents
United States Patent and Trademark Office
P.O. Box 1450
Alexandria, VA 22313-1450
www.uspto.gov

Faegre & Benson, LLP
Patent Docketing
2200 Wells Fargo Center
90 South Seventh Street
Minneapolis, MN 55402-3901

COPY MAILED
MAY 21 2007
OFFICE OF PETITIONS

In re Application of	:	
Zhengxing Qu et al.	:	
Application No. 11/070,697	:	DECISION ON PETITION
Filed: March 3, 2005	:	TO MAKE SPECIAL UNDER
Attorney Docket No. 40923-0074US11	:	37 CFR 1.102(c)(1)
	:	

This is a decision on the petition under 37 CFR 1.102(c)(1), filed April 13, 2007, to make the above-identified application special based on applicant's age as set forth in M.P.E.P. § 708.02, Section IV.

The petition is **GRANTED**.

A grantable petition to make an application special under 37 CFR 1.102(c)(1) and MPEP § 708.02, Section IV: Applicant's Age must be accompanied by evidence showing that at least one of the applicants is 65 years of age, or more, such as a birth certificate or a statement by applicant. No fee is required

The instant petition includes a signed declaration/affidavit. Accordingly, the above-identified application has been accorded "special" status.

Telephone inquiries concerning this decision should be directed to Kimberly Inabinet at 571-272-4618.

All other inquiries concerning either the examination or status of the application should be directed to the Technology Center.

The application is being forwarded to the Technology Center Art Unit 1644 for action on the merits commensurate with this decision.

Frances Hicks
Petitions Examiner
Office of Petitions

UNITED STATES PATENT AND TRADEMARK OFFICE

Commissioner for Patents
United States Patent and Trademark Office
P.O. Box 1450
Alexandria, VA 22313-1450
www.uspto.gov

DONN K. HARMS
PATENT & TRADEMARK LAW CENTER
SUITE 100
12702 VIA CORTINA
DEL MAR CA 92014

COPY MAILED

DEC 07 2005

OFFICE OF PETITIONS

In re Application of	:	
Hashimshony et al.	:	
Application No. 11/070,707	:	ON PETITION
Filed: March 1, 2005	:	
Attorney Docket No. 3118-PAT	:	

This is a decision on the petition under 37 CFR 1.102(c)(1), filed September 19, 2005, to make the above-identified application special based on applicant's age as set forth in M.P.E.P. § 708.02, Section IV.

The petition is **GRANTED**.

A grantable petition to make an application special under 37 CFR 1.102(c)(1) and MPEP § 708.02, Section IV: Applicant's Age must be accompanied by evidence showing that at least one of the applicants is 65 years of age, or more, such as a birth certificate or a statement by applicant. No fee is required

The instant petition includes a copy of the applicant's passport. Accordingly, the above-identified application has been accorded "special" status.

Telephone inquiries concerning this decision should be directed to Petitions Examiner Liana Chase at 571-272-3206.

All other inquiries concerning either the examination or status of the application should be directed to the Technology Center.

This matter is being referred to the Technology Center Art Unit 3752 for action on the merits commensurate with this decision.

David Bucci
Petitions Examiner
Office of Petitions

UNITED STATES PATENT AND TRADEMARK OFFICE

Commissioner for Patents
United States Patent and Trademark Office
P.O. Box 1450
Alexandria, VA 22313-1450
www.uspto.gov

KYOCERA WIRELESS CORP.
P.O. BOX 928289
SAN DIEGO, CA 92192-8289

COPY MAILED

AUG 1 0 2005

OFFICE OF PETITIONS

In re Application of
Steer et al.
Application No. 11/070,709
Filed: March 1, 2005
Attorney Docket No. UTL 00296
For: Systems and Methods for Visual Alerting Mechanisms on a Mobile Communication Device

Decision on Petition

This is a decision on the petition under 37 CFR 1.47(a), filed May 16, 2005. This is also a decision in response to the request for a filing date of March 1, 2005, which is being treated as a petition under 37 CFR 1.10.

The petition under 37 CFR 1.47(a) is **DISMISSED**.

The petition under 37 CFR 1.10(c) is **GRANTED**.

The petition under 37 CFR 1.47(a)

Petitioner has failed to prove that Karoly Becze cannot be found or located *after diligent effort*.

Petitioner states that a letter to the inventor's last known address was returned but fails to list any steps taken to discover a new address for the inventor. Petitioner must demonstrate that diligent effort has been exerted to find inventor Becze. Examples of steps which can be taken include contacting directory assistance for a current phone number or performing an internet search.

As a courtesy, the Office is supplying a possible address for Becze. The Office does not verify that the information is correct nor does the information, if inaccurate, release petitioner from the obligation to exercise diligent effort to find the nonsigning inventor. An internet search indicates that a Karoly Becze lives at 17075 Bernando Drive, Apt. 201, San Diego, CA 92127. It is unclear if this is the same individual as the inventor listed on the declaration.

The petition cannot be granted because the declaration fails to list mailing and residential addresses for the non-signing inventor. Petitioner must either file a new declaration OR file an Application Data Sheet containing the last known mailing and residential addresses for Becze.

The petition fee for a petition under 37 CFR 1.47 is $200. Petitioner submitted $130. Therefore, $70 has been charged to petitioner's deposit account.

The petition under 37 CFR 1.10(c)

37 CFR 1.10(c) states,

> Any person filing correspondence under this section that was received by the Office and delivered by the "Express Mail Post Office to Addressee" service of the USPS, who can show that there is a discrepancy between the filing date accorded by the Office to the correspondence and the date of deposit as shown by the "date-in" on the "Express Mail" mailing label or other official USPS notation, may petition the Commissioner to accord

the correspondence a filing date as of the "date-in" on the "Express Mail" mailing label or other official USPS notation, provided that:

(1) The petition is filed promptly after the person becomes aware that the Office has accorded, or will accord, a filing date other than the USPS deposit date;

(2) The number of the "Express Mail" mailing label was placed on the paper(s) or fee(s) that constitute the correspondence prior to the original mailing by "Express Mail;" and

(3) The petition includes a true copy of the "Express Mail" mailing label showing the "date-in," and of any other official notation by the USPS relied upon to show the date of deposit.

All of the above requirements have been met. Therefore, the application has been accorded a filing date of March 1, 2005.

Requesting reconsideration under 37 CFR 1.47

Any request for reconsideration of this decision must be submitted within TWO (2) MONTHS from the mail date of this decision. Extensions of time under 37 CFR 1.136(a) are permitted. Any response should be entitled "Request for Reconsideration of Petition Under 37 CFR 1.47(a)" and may include an oath or declaration executed by the current non-signing inventor(s). **Failure to respond will result in abandonment of the application.**

Further correspondence with respect to this matter should be addressed as follows:

By mail: Mail Stop Petition
Commissioner for Patents
P.O. Box 1450
Alexandria, VA 22313-1450

By facsimile: (571) 273-8300
Attn: Office of Petitions

If a request for reconsideration is filed, and a decision on the new petition is not received within three months, petitioner may wish to call the number below to check on the status of the renewed petition.

Telephone inquiries concerning the instant decision should be directed to Petitions Attorney Steven Brantley at (571) 272-3203.

Charles Steven Brantley
Petitions Attorney
Office of Petitions

UNITED STATES PATENT AND TRADEMARK OFFICE

Commissioner for Patents
United States Patent and Trademark Office
P.O. Box 1450
Alexandria, VA 22313-1450
www.uspto.gov

KYOCERA WIRELESS CORP.
P.O. BOX 928289
SAN DIEGO, CA 92192-8289

COPY MAILED

MAR 0 7 2006

OFFICE OF PETITIONS

In re Application of	:	
Steer et al.	:	
Application No. 11/070,709	:	
Filed: March 1, 2005	:	Decision According Status
Attorney Docket No. UTL 00296	:	Under 37 CFR 1.47(a)
For: Systems and Methods for Visual Alerting	:	
Mechanisms on a Mobile Communication	:	
Device	:	

This is a decision on the renewed petition under 37 CFR 1.47(a), filed December 12, 2005.

The petition under 37 CFR 1.47(a) is **granted**.

The above-identified application and papers have been reviewed and found in compliance with 37 CFR 1.47(a). This application is hereby accorded Rule 1.47(a) status.

As provided in Rule 1.47(c), this Office will forward notice of this application's filing to the non-signing inventor at the address given in the petition. Notice of the filing of this application will also be published in the Official Gazette.

The Office of Initial Patent Examination will be informed of the instant decision so that it may continue to prepare the application for examination.

Telephone inquiries concerning the instant decision should be directed to Petitions Attorney Steven Brantley at (571) 272-3203.

Charles Steven Brantley
Petitions Attorney
Office of Petitions

UNITED STATES PATENT AND TRADEMARK OFFICE

Commissioner for Patents
United States Patent and Trademark Office
P.O. Box 1450
Alexandria, VA 22313-1450
www.uspto.gov

Karoly Becze
17075 Bernardo Drive
Apt. 201
San Diego, CA 92127

COPY MAILED

MAR 0 7 2006

OFFICE OF PETITIONS

Letter

In re Application of :
Steer et al. :
Application No. 11/070,709 :
Filed: March 1, 2005 :
Attorney Docket No. UTL 00296 :
For: Systems and Methods for Visual Alerting :
Mechanisms on a Mobile Communication :
Device :

You are named as a joint inventor in the above identified United States patent application.

Should a patent be granted on the application you will be designated therein as a joint inventor.

As a named inventor you, or a registered patent attorney or agent on your behalf, have the right to obtain copies of any papers in the file wrapper. Information regarding how to pay for and order a copy of the application, or a specific paper in the application, should be directed to Certification Division at (703) 308-9726 or 1 (800) 972-6382 (outside the Washington D.C. area).

General requests for information regarding the application should be directed to the File Information Unit at (703) 308-2733.

Telephone inquiries regarding this communication may be directed to Petitions Attorney Steven Brantley at (571) 272-3203.

Charles Steven Brantley
Petitions Attorney
Office of Petitions

cc: KYOCERA WIRELESS CORP.
P.O. BOX 928289
SAN DIEGO, CA 92192-8289

UNITED STATES PATENT AND TRADEMARK OFFICE

UNITED STATES DEPARTMENT OF COMMERCE
United States Patent and Trademark Office
Address: COMMISSIONER FOR PATENTS
P.O. Box 1450
Alexandria, Virginia 22313-1450
www.uspto.gov

BENDIX COMMERCIAL VEHICLE SYSTEMS, LLC
901 CLEVELAND STREET
ELYRIA, OH 44035

Mail Date: 04/21/2010

Applicant	: Sharon A. Seitz	: DECISION ON REQUEST FOR
Patent Number	: 7632076	: RECALCULATION of PATENT
Issue Date	: 12/15/2009	: TERM ADJUSTMENT IN VIEW
Appliction No	: 11/070,712	: OF WYETH AND NOTICE OF INTENT TO
Filed	: 03/02/2005	: ISSUE CERTIFICATE OF CORRECTION
		:

The Request for Recalculation is **GRANTED** to the extent indicated.

The patent term adjustment has been determined to be **1323** days. The USPTO will *sua sponte* issue a certificate of correction reflecting the amount of PTA days determined by the recalculation.

Prior to the issuance of the certificate of correction, the USPTO will afford patentee an opportunity to be heard and request reconsideration. Accordingly, patentee has **one month or thirty (30) days**, whichever is longer, to file a request for reconsideration of this patent term adjustment calculation. See 35 U.S.C. 154(b)(3)(B)(ii) and 37 CFR 1.322(a)(4). No extensions of time will be granted under 37 CFR 1.136.

Patentee should use document code PET.OP if electronically filing a request for reconsideration of this patent term adjustment calculation. The patentee must also include the information required by 37 CFR 1.705(b)(2) and the fee required by 37 CFR 1.18(e). If patentee does not file a timely request for reconsideration of this patent term adjustment calculation including the information required by 37 CFR 1.705(b)(2) and the fee required by 37 CFR 1.18(e), the USPTO will issue a certificate of correction reflecting the PTA determination noted above.

Patentee should be aware that in order to preserve the right to review in the United States District Court for the District of Columbia of the USPTO patent term adjustment determination, patentee must ensure that he or she also take the steps required under 35 U.S.C. 154(b)(4)(A) in a timely manner. Nothing in the request for recalculation should be construed as providing an alternative time frame for commencing a civil action under 35 U.S.C. 154(b)(4)(A).

Any questions concerning this decision should be directed to the Office of Patent Legal Administration at 571-272-7702.

UNITED STATES PATENT AND TRADEMARK OFFICE

Commissioner for Patents
United States Patent and Trademark Office
P.O. Box 1450
Alexandria, VA 22313-1450
www.uspto.gov

MARTIN & FERRARO, LLP
1557 LAKE O'PINES STREET, NE
HARTVILLE OH 44632

COPY MAILED

OCT 18 2005

OFFICE OF PETITIONS

In re Application of	:
Young, et al.	:
Application No. 11/070,713	: DECISION ACCORDING STATUS
Filed: March 2, 2005	: UNDER 37 CFR 1.47(a)
Attorney Docket No. 121.0004-00000	:
For: LAPAROSCOPIC INSTRUMENTS AND METHODS UTILIZING SUCTION	:

This is in response to the petition under 37 CFR 1.47(a), filed September 29, 2005.

The petition is granted.

Petitioners have shown that the non-signing inventor, John Shipp, has refused to join in the filing of the above-identified application after having been presented with the application papers. Specifically, the statement of facts of Attorney Thomas H. Martin establishes that the inventor was successfully mailed the application papers, including the specification, claims and drawings on April 5, 2005 and the inventor expressly sign the declaration via e-mail on April 21, 2005. Petitioners have submitted a declaration in compliance with 37 CFR 1.63 and 1.64.

This application and papers have been reviewed and found in compliance with 37 CFR 1.47(a). This application is hereby accorded Rule 1.47(a) status.

As provided in Rule 1.47(c), this Office will forward notice of this application's filing to the non-signing inventor at the address given in the petition. Notice of the filing of this application will also be published in the Official Gazette.

After this decision is mailed, the above-identified application will be forwarded to the Office of Initial Patent Examination for further processing.

Telephone inquiries should be directed to the undersigned at (571) 272-3230.

E. Shirene Willis

E. Shirene Willis
Senior Petitions Attorney
Office of Petitions

SPE RESPONSE FOR CERTIFICATE OF CORRECTION

Paper No.:20090406

DATE : April 06, 2009

TO SPE OF : ART UNIT 2611

SUBJECT : Request for Certificate of Correction on Patent No.: 7,477,703

A response is requested with respect to the accompanying request for a certificate of correction.

Please complete this form and return with file, within **7** days to:
Certificates of Correction Branch - ST (South Tower) 9A22
Palm location **7590** - Tel. No. (703) 305-8309

With respect to the change(s) requested, correcting Office and/or Applicant's errors, should the patent read as shown in the certificate of correction? No new matter should be introduced, nor should the scope or meaning of the claims be changed.

Thank You For Your Assistance **Certificates of Correction Branch**

The request for issuing the above-identified correction(s) is hereby:

Note your decision on the appropriated box.

☒ **Approved** All changes apply.

☐ **Approved in Part** Specify below which changes **do not** apply.

☐ **Denied** State the reasons for denial below.

Comments:

/David C. Payne/
Supervisory Patent Examiner, Art Unit 2611

UNITED STATES PATENT AND TRADEMARK OFFICE

Commissioner for Patents
United States Patent and Trademark Office
P.O. Box 1450
Alexandria, VA 22313-1450
www.uspto.gov

LEWIS ANTEN
SUITE 310
16830 VENTURA BLVD.
ENCINO CA 91436-1726

COPY MAILED

JUN 16 2008

OFFICE OF PETITIONS

In re Application of
Melvin C. Stanley
Application No. 11/070,719
Filed: March 1, 2005
Attorney Docket No. 39140.014

: DECISION ON PETITION
: UNDER 37 CFR 1.78(a)(3)

This is a decision on the petition filed April 4, 2008 under 37 CFR 1.78(a)(3) to accept an unintentionally delayed claim under 35 U.S.C. § 120 for the benefit of prior-filed non-provisional application 09/970,401 filed October 2, 2001, set forth in the concurrently filed Application Data Sheet.

The petition is **GRANTED**.

A petition for acceptance of a claim for late priority under 37 CFR 1.78(a)(3) is only applicable to those applications filed on or after November 29, 2000. Further, the petition is appropriate only after the expiration of the period specified in 37 CFR 1.78(a)(2)(ii). In addition, the petition under 37 CFR 1.78(a)(3) must be accompanied by:

(1) the reference required by 35 U.S.C. § 120 and 37 CFR 1.78(a)(2)(i) of the prior-filed application, unless previously submitted;
(2) the surcharge set forth in § 1.17(t); and
(3) a statement that the entire delay between the date the claim was due under 37 CFR 1.78(a)(2)(ii) and the date the claim was filed was unintentional. The Director may require additional information where there is a question whether the delay was unintentional.

All of the above requirements having been satisfied, the late claim for priority under 35 U.S.C. § 120 is accepted as being unintentionally delayed.

The granting of the petition to accept the delayed benefit claim to the prior-filed application under 37 CFR 1.78(a)(3) should not be construed as meaning that this application is entitled to the benefit of the prior-filed application. In order for this application to be entitled to the benefit of the prior-filed application, all other requirements under 35 U.S.C. § 120 and 37 CFR 1.78(a)(1) and (a)(2) must be met. Similarly, the fact that the corrected Filing Receipt accompanying this decision on petition includes the prior-filed application should not be construed as meaning that applicant is entitled to the claim for benefit of priority to the prior-filed application noted thereon. Accordingly, the examiner will, in due course, consider this benefit claim and determine whether the application is entitled to the benefit of the earlier filing date.

A corrected Filing Receipt, which includes the priority claim to the prior-filed nonprovisional application, accompanies this decision on petition.

Any inquiries concerning this decision may be directed to Senior Petitions Attorney Patricia Faison-Ball at (571) 272-3212. All other inquiries concerning either the examination procedures or status of the application should be directed to the Technology Center.

This application is being forwarded to Technology Center Art Unit 1797 for consideration by the examiner of applicant's entitlement to claim benefit of priority under 35 U.S.C. § 120 to the prior-filed application.

Anthony Knight
Supervisor
Office of Petitions

ATTACHMENT: Corrected Filing Receipt

UNITED STATES PATENT AND TRADEMARK OFFICE

UNITED STATES DEPARTMENT OF COMMERCE
United States Patent and Trademark Office
Address: COMMISSIONER FOR PATENTS
P.O. Box 1450
Alexandria, Virginia 22313-1450
www.uspto.gov

APPLICATION NUMBER	FILING or 371(c) DATE	GRP ART UNIT	FIL FEE REC'D	ATTY.DOCKET.NO	TOT CLAIMS	IND CLAIMS
11/070,719	03/01/2005	1797	800	39140.014	18	3

CONFIRMATION NO. 3579

CORRECTED FILING RECEIPT

Lewis Anten
Suite 310
16830 Ventura Blvd.
Encino, CA 91436-1726

OC000000030419811

Date Mailed: 06/11/2008

Receipt is acknowledged of this non-provisional patent application. The application will be taken up for examination in due course. Applicant will be notified as to the results of the examination. Any correspondence concerning the application must include the following identification information: the U.S. APPLICATION NUMBER, FILING DATE, NAME OF APPLICANT, and TITLE OF INVENTION. Fees transmitted by check or draft are subject to collection. Please verify the accuracy of the data presented on this receipt. **If an error is noted on this Filing Receipt, please submit a written request for a Filing Receipt Correction. Please provide a copy of this Filing Receipt with the changes noted thereon. If you received a "Notice to File Missing Parts" for this application, please submit any corrections to this Filing Receipt with your reply to the Notice. When the USPTO processes the reply to the Notice, the USPTO will generate another Filing Receipt incorporating the requested corrections**

Applicant(s)

Melvin C. Stanley, Meadows of Dan, VA;

Assignment For Published Patent Application

Rotometrics

Power of Attorney:
Martin Hoffman--22261
Mitchell Wasson--27408
Stewart Gitler--31256
Christopher McDonald--41533

Domestic Priority data as claimed by applicant

This application is a CON of 09/970,401 10/02/2001 ABN

Foreign Applications

If Required, Foreign Filing License Granted: 03/25/2005

The country code and number of your priority application, to be used for filing abroad under the Paris Convention, is **US 11/070,719**

Projected Publication Date: Not Applicable

Non-Publication Request: No

Early Publication Request: No
**** SMALL ENTITY ****

Title

METHOD AND APPARATUS TO CLEAN PARTICULATE MATTER FROM A TOXIC FLUID

Preliminary Class

210

PROTECTING YOUR INVENTION OUTSIDE THE UNITED STATES

Since the rights granted by a U.S. patent extend only throughout the territory of the United States and have no effect in a foreign country, an inventor who wishes patent protection in another country must apply for a patent in a specific country or in regional patent offices. Applicants may wish to consider the filing of an international application under the Patent Cooperation Treaty (PCT). An international (PCT) application generally has the same effect as a regular national patent application in each PCT-member country. The PCT process **simplifies** the filing of patent applications on the same invention in member countries, but **does not result** in a grant of "an international patent" and does not eliminate the need of applicants to file additional documents and fees in countries where patent protection is desired.

Almost every country has its own patent law, and a person desiring a patent in a particular country must make an application for patent in that country in accordance with its particular laws. Since the laws of many countries differ in various respects from the patent law of the United States, applicants are advised to seek guidance from specific foreign countries to ensure that patent rights are not lost prematurely.

Applicants also are advised that in the case of inventions made in the United States, the Director of the USPTO must issue a license before applicants can apply for a patent in a foreign country. The filing of a U.S. patent application serves as a request for a foreign filing license. The application's filing receipt contains further information and guidance as to the status of applicant's license for foreign filing.

Applicants may wish to consult the USPTO booklet, "General Information Concerning Patents" (specifically, the section entitled "Treaties and Foreign Patents") for more information on timeframes and deadlines for filing foreign patent applications. The guide is available either by contacting the USPTO Contact Center at 800-786-9199, or it can be viewed on the USPTO website at http://www.uspto.gov/web/offices/pac/doc/general/index.html.

For information on preventing theft of your intellectual property (patents, trademarks and copyrights), you may wish to consult the U.S. Government website, http://www.stopfakes.gov. Part of a Department of Commerce initiative, this website includes self-help "toolkits" giving innovators guidance on how to protect intellectual property in specific countries such as China, Korea and Mexico. For questions regarding patent enforcement issues, applicants may call the U.S. Government hotline at 1-866-999-HALT (1-866-999-4158).

LICENSE FOR FOREIGN FILING UNDER

Title 35, United States Code, Section 184

Title 37, Code of Federal Regulations, 5.11 & 5.15

GRANTED

The applicant has been granted a license under 35 U.S.C. 184, if the phrase "IF REQUIRED, FOREIGN FILING LICENSE GRANTED" followed by a date appears on this form. Such licenses are issued in all applications where the conditions for issuance of a license have been met, regardless of whether or not a license may be required as

set forth in 37 CFR 5.15. The scope and limitations of this license are set forth in 37 CFR 5.15(a) unless an earlier license has been issued under 37 CFR 5.15(b). The license is subject to revocation upon written notification. The date indicated is the effective date of the license, unless an earlier license of similar scope has been granted under 37 CFR 5.13 or 5.14.

This license is to be retained by the licensee and may be used at any time on or after the effective date thereof unless it is revoked. This license is automatically transferred to any related applications(s) filed under 37 CFR 1.53(d). This license is not retroactive.

The grant of a license does not in any way lessen the responsibility of a licensee for the security of the subject matter as imposed by any Government contract or the provisions of existing laws relating to espionage and the national security or the export of technical data. Licensees should apprise themselves of current regulations especially with respect to certain countries, of other agencies, particularly the Office of Defense Trade Controls, Department of State (with respect to Arms, Munitions and Implements of War (22 CFR 121-128)); the Bureau of Industry and Security, Department of Commerce (15 CFR parts 730-774); the Office of Foreign AssetsControl, Department of Treasury (31 CFR Parts 500+) and the Department of Energy.

NOT GRANTED

No license under 35 U.S.C. 184 has been granted at this time, if the phrase "IF REQUIRED, FOREIGN FILING LICENSE GRANTED" DOES NOT appear on this form. Applicant may still petition for a license under 37 CFR 5.12, if a license is desired before the expiration of 6 months from the filing date of the application. If 6 months has lapsed from the filing date of this application and the licensee has not received any indication of a secrecy order under 35 U.S.C. 181, the licensee may foreign file the application pursuant to 37 CFR 5.15(b).

UNITED STATES PATENT AND TRADEMARK OFFICE

COMMISSIONER FOR PATENTS
UNITED STATES PATENT AND TRADEMARK OFFICE
P.O. BOX 1450
ALEXANDRIA, VA 22313-1450
www.uspto.gov

WILSON SPORTING GOODS CO.
8750 W. BRYN MAWR AVE.
CHICAGO IL 60631

COPY MAILED

DEC 27 2007

OFFICE OF PETITIONS

In re Application of
William D. Severa, et al.
Application No. 11/070,725
Filed: March 1, 2005
Attorney Docket No. WR0193

ON PETITION

This is a decision in response to the petition, filed July 17, 2007, to withdraw the holding of abandonment under the provisions of 37 CFR 1.181 and the petition under 37 CFR 1.137(b) to revive the above-identified application filed September 6, 2007.

A review of the record discloses that the application became abandoned for failure to pay the issue fee and publication fee on or before June 11, 2007. A Notice of Abandonment was mailed on June 19, 2007. In response, on July 17, 2007, a petition under 37 CFR 1.181 was filed wherein petitioners argue that the abandonment should be withdrawn. Petitioners explain that the issue fee was timely submitted on March 14, 2007. Thereafter, on September 6, 2007, a petition to revive under 37CFR 1.137(b) was filed.

The petition to withdraw the holding of abandonment under 37 CFR 1.181 is **DISMISSED**.

Petitioners' argument is not well taken. Part B of the Notice of Allowance and Fee(s) Due form was submitted on March 14, 2007. However, when the Office attempted to charge the issue and publication fees, the deposit account contained insufficient funds. 37 CFR 1.25 states that "[a]n amount sufficient to cover all fees, services, copies, etc., requested must **always** be on deposit. Charges to accounts with insufficient funds will not be accepted." (emphasis added) Consequently, the application was properly held abandoned. It is noted that the issue and publication fees were paid on July 17, 2007, which is clearly after the due date of June 11, 2007. Thus, the petition to revive under 37 CFR 1.137(b) is necessary and a decision thereon follows.

The petition to revive under 37 CFR 1.137(b) is **GRANTED**.

The petition satisfies the requirements of 37 CFR 1.137(b) in that petitioner has supplied (1) the reply in the form of the requisite issue/publication fee; (2) the petition fee of $1,500; and (3) an adequate statement of unintentional delay.

The application is being referred to the Office of Publications to be processed into a patent.

Telephone inquires related to this decision should be directed to the undersigned at (571) 272-3204. Telephone inquiries related to processing at Publishing Division should be directed to (571) 272-4200.

Sherry D. Brinkley
Petitions Examiner
Office of Petitions

SPE RESPONSE FOR CERTIFICATE OF CORRECTION

Paper No.: _____

DATE : 9-19-06

TO SPE OF : ART UNIT 2816

SUBJECT : Request for Certificate of Correction for Appl. No.: 11/070730 Patent No.: 7075350

Please respond to this request for a certificate of correction within 7 days.

Please review the requested changes/corrections as shown in the **COCIN** document(s) in the IFW application image. No new matter should be introduced, nor should the scope or meaning of the claims be changed.

Check cols.

Please complete the response (see below) and forward the completed response to scanning using document code **COCX**.

P. Young

Certificates of Correction Branch

703-308-9390 ext. _____

Thank You For Your Assistance

The request for issuing the above-identified correction(s) is hereby:

Note your decision on the appropriate box.

- ☒ **Approved** — All changes apply.
- ☐ **Approved in Part** — Specify below which changes **do not** apply.
- ☐ **Denied** — State the reasons for denial below.

Comments: Changes are approved.

SPE

2816

Art Unit

UNITED STATES PATENT AND TRADEMARK OFFICE

Commissioner for Patents
United States Patent and Trademark Office
P.O. Box 1450
Alexandria, VA 22313-1450
www.uspto.gov

CHOATE, HALL & STEWART LLP
TWO INTERNATIONAL PLACE
BOSTON, MA 02110

COPY MAILED

OCT 0 7 2008

OFFICE OF PETITIONS

In re Application of	:	
Shiladitya SENGUPTA, et al	:	
Application No. 11/070,731	:	DECISION ON PETITION
Filed: March 2, 2005	:	TO WITHDRAW
Attorney Docket No. 0492611-0610 (MIT 10017)	:	FROM RECORD
	:	

This is a decision on the Request to Withdraw as attorney or agent of record under 37 C.F.R. § 1.36(b), filed August 27, 2008.

The request is **APPROVED**.

A grantable request to withdraw as attorney/agent of record must be signed by every attorney/agent seeking to withdraw or contain a clear indication that one attorney is signing on behalf of another/others. The Office requires the practitioner(s) requesting withdrawal to certify that he, she, or they have: (1) given reasonable notice to the client, prior to the expiration of the response period, that the practitioner(s) intends to withdraw from employment; (2) delivered to the client or a duly authorized representative of the client all papers and property (including funds) to which the client is entitled; and (3) notified the client of any responses that may be due and the time frame within which the client must respond, pursuant 37 CFR 10.40(c).

The request was signed by C. Hunter Baker on behalf of the attorneys of record associated with Customer No. 24280.

The attorneys of record associated with Customer No. 24280 have been withdrawn.

Applicant is reminded that there is no attorney of record at this time.

The request to change the correspondence of record is not acceptable as the requested correspondence address is not that of: (1) the first named signing inventor; or (2) an intervening assignee of the entire interest under 37 C.F.R 3.71. All future communications from the Office will be directed to the first named signing inventor at the first copied address below until otherwise properly notified by the applicant.

In order to request or take action in a patent matter, the assignee must establish its ownership of the patent to the satisfaction of the Director. In this regard, a Statement under 37 CFR 3.73(b) must have either: (i) documentary evidence of a chain of title from the original owner to the assignee (*e.g.*, copy of an executed assignment), and a statement affirming that the documentary evidence of the chain of title from the original owner to the assignee was or concurrently is being submitted for recordation pursuant to § 3.11; or (ii) a statement specifying where documentary evidence of a chain of title from the original owner to the assignee is recorded in the assignment records of the Office (*e.g.*, reel and frame number).

Telephone inquiries concerning this decision should be directed to the undersigned at 571-272-6735.

Diane Goodwyn
Petitions Examiner
Office of Petitions

cc: SHILADIYA SENGUPTA
100 LAKE STREET
BRIGHTON, MA 02135

KEVIN KING
SUTHERLAND ASBILL & BRENNAN, LLP
999 PEACHTREE STREET
ATLANTA, GA 30309

UNITED STATES PATENT AND TRADEMARK OFFICE

Commissioner for Patents
United States Patent and Trademark Office
P.O. Box 1450
Alexandria, VA 22313-1450
www.uspto.gov

MARSHALL, GERSTEIN & BORUN LLP
233 S. WACKER DRIVE, SUITE 6300
SEARS TOWER
CHICAGO, IL 60606

COPY MAILED

MAY 30 2006

OFFICE OF PETITIONS

In re Application of	:	
Robert Lamb	:	
Application No. 11/070,738	:	DECISION ON PETITION
Filed: March 2, 2005	:	TO WITHDRAW
Attorney Docket No. 30899/40642.1	:	FROM RECORD
	:	

This is a decision on the Request to Withdraw as attorney or agent of record under 37 C.F.R. § 1.36(b), filed January 13, 2006.

The request is **NOT APPROVED** as moot.

A review of the file record indicates that the power of attorney to David A. Gass, along with all of the other attorneys associated with Customer No. **04743**, has been revoked by the applicant of the patent application on April 3, 2006. Accordingly, the request to withdraw under 37 C.F.R. § 1.36(b) is moot.

All future communications from the Office will continue to be directed to the first below-listed address until otherwise notified by applicant/assignee or the current attorneys of record.

Telephone inquires concerning this decision should be directed to the undersigned at 571-272-3208.

Karen Creasy

Karen Creasy
Petitions Examiner
Office of Petitions

cc:
PILLSBURY WINTHROP SHAW PITTMAN
P.O. BOX 10500
MCLEAN VA 22102

JAMES B. HOVIS AND ANNE P. HOVIS
ADVANCED BIO-DELIVERY, LLC
1133 CONNECTICUT AVE., NW, SUITE 200
WASHINGTON DC 20036

UNITED STATES PATENT AND TRADEMARK OFFICE

Commissioner for Patents
United States Patent and Trademark Office
P.O. Box 1450
Alexandria, VA 22313-1450
www.uspto.gov

HEDMAN & COSTIGAN P.C.
1185 AVENUE OF THE AMERICAS
NEW YORK NY 10036

COPY MAILED
NOV 2 6 2008

In re Application of	:	
Jaya Panvalkar, et al.	:	
Application No. 11/070,747	:	DECISION DISMISSING PETITION
Filed: March 2, 2005	:	UNDER 37 CFR 1.313(a)
Attorney Docket No. 285.083A	:	

This is a decision on the petition under 37 CFR 1.313(a), filed November 25, 2008, requesting withdrawal of the above-identified application from issue.

The petition is **dismissed** as moot for the reasons stated below.

A review of the file record discloses that a Notice of Allowance and Fee(s) Due was mailed on August 26, 2008, with the issue fee being due on or before November 26, 2008. The petition states that the issue fee in this case has not been paid.

The filing of a petition under 37 CFR 1.313(a) is unnecessary, since the mere filing of an RCE and submission will effectively withdraw an application from issue prior to payment of the issue fee. In view thereof, the petition to withdraw from issue is dismissed as involving a moot issue. *Note* MPEP §§ 706.07(h)(IX) and 1308.

There is no indication that the person signing the petition was ever given a power of attorney to prosecute the application. If the person signing the petition desires to receive future correspondence regarding this application, the appropriate power of attorney documents must be submitted. While a courtesy copy of this decision is being mailed to the person signing the petition, all future correspondence will be directed to the address currently of record until appropriate instructions are received.

Inquiries concerning this decision may be directed to Terri Williams at (571) 272-2991.

The matter is being referred to Technology Center AU 2619 for appropriate processing of the RCE filed November 25, 2008, and for consideration of the concurrently filed amendment.

Terri Williams

Terri Williams
Petitions Examiner
Office of Petitions

cc: **Kevin J. Zilka**
Zilka-Kotab, PC
P.O. Box 721120
San Jose, CA 95172-1120

UNITED STATES PATENT AND TRADEMARK OFFICE

Commissioner for Patents
United States Patent and Trademark Office
P.O. Box 1450
Alexandria, VA 22313-1450
www.uspto.gov

QUALCOMM INCORPORATED
5775 MOREHOUSE DRIVE
SAN DIEGO, CA 92121

COPY MAILED

DEC 19 2007

OFFICE OF PETITIONS

In re Application of	:	
Richard D. Lane et al	:	
Application No. 11/070,762	:	DECISION ON PETITION
Filed: March 2, 2005	:	
Attorney Docket No. 040829	:	

This is a decision on the petition under 37 CFR 1.137(b), filed August 29, 2007, to revive the above-identified application.

The petition is **GRANTED**.

This application became abandoned for failure to timely pay the issue and publication fees on or before February 6, 2007, as required by the Notice of Allowance and Fee(s) Due, mailed November 6, 2007. Accordingly, the date of abandonment of this application is February 7, 2007. A Notice of Abandonment was mailed on March 7, 2007.

The petition satisfies the requirements of 37 CFR 1.137(b) in that petitioner has supplied (1) the reply in the form of payment of the issue fee of $1,400 and the publication fee of $300, (2) the petition fee of $1,500, and (3) a proper statement of unintentional delay. Accordingly, the issue and publication fees are accepted as being unintentionally delayed.

Telephone inquiries concerning this decision should be directed to the undersigned at (571) 272-3218.

This application is being referred to Office of Data Management for appropriate processing in accordance with this decision on petition via Technology Center AU 2612 for consideration of the concurrently filed Information Disclosure Statement.

Frances Hicks
Petitions Examiner
Office of Petitions

UNITED STATES PATENT AND TRADEMARK OFFICE

UNITED STATES DEPARTMENT OF COMMERCE
United States Patent and Trademark Office
Address: COMMISSIONER FOR PATENTS
P.O. Box 1450
Alexandria, Virginia 22313-1450
www.uspto.gov

BAKER BOTTS L.L.P.
2001 ROSS AVENUE
SUITE 600
DALLAS, TX 75201-2980

Mail Date: 05/06/2010

Applicant	: Rishi Bhatia	: DECISION ON REQUEST FOR
Patent Number	: 7634758	: RECALCULATION of PATENT
Issue Date	: 12/15/2009	: TERM ADJUSTMENT IN VIEW
Application No	: 11/070,787	: OF WYETH AND NOTICE OF INTENT TO
Filed	: 03/02/2005	: ISSUE CERTIFICATE OF CORRECTION
		:

The Request for Recalculation is **GRANTED** to the extent indicated.

The patent term adjustment has been determined to be **1323** days. The USPTO will *sua sponte* issue a certificate of correction reflecting the amount of PTA days determined by the recalculation.

Prior to the issuance of the certificate of correction, the USPTO will afford patentee an opportunity to be heard and request reconsideration. Accordingly, patentee has **one month or thirty (30) days**, whichever is longer, to file a request for reconsideration of this patent term adjustment calculation. See 35 U.S.C. 154(b)(3)(B)(ii) and 37 CFR 1.322(a)(4). No extensions of time will be granted under 37 CFR 1.136.

Patentee should use document code PET.OP if electronically filing a request for reconsideration of this patent term adjustment calculation. The patentee must also include the information required by 37 CFR 1.705(b)(2) and the fee required by 37 CFR 1.18(e). If patentee does not file a timely request for reconsideration of this patent term adjustment calculation including the information required by 37 CFR 1.705(b)(2) and the fee required by 37 CFR 1.18(e), the USPTO will issue a certificate of correction reflecting the PTA determination noted above.

Patentee should be aware that in order to preserve the right to review in the United States District Court for the District of Columbia of the USPTO patent term adjustment determination, patentee must ensure that he or she also take the steps required under 35 U.S.C. 154(b)(4)(A) in a timely manner. Nothing in the request for recalculation should be construed as providing an alternative time frame for commencing a civil action under 35 U.S.C. 154(b)(4)(A).

Any questions concerning this decision should be directed to the Office of Patent Legal Administration at 571-272-7702.

UNITED STATES PATENT AND TRADEMARK OFFICE

UNITED STATES DEPARTMENT OF COMMERCE
United States Patent and Trademark Office
Address: COMMISSIONER FOR PATENTS
P.O. Box 1450
Alexandria, Virginia 22313-1450
www.uspto.gov

BOYLE FREDRICKSON S.C.
840 North Plankinton Avenue
MILWAUKEE, WI 53203

Mail Date: 04/23/2010

Applicant	: Nicholas A. Matiash	: DECISION ON REQUEST FOR
Patent Number	: 7615723	: RECALCULATION of PATENT
Issue Date	: 11/10/2009	: TERM ADJUSTMENT IN VIEW
Application No	: 11/070,792	: OF WYETH AND NOTICE OF INTENT TO
Filed	: 03/01/2005	: ISSUE CERTIFICATE OF CORRECTION
		:

The Request for Recalculation is **GRANTED** to the extent indicated.

The patent term adjustment has been determined to be **1184** days. The USPTO will *sua sponte* issue a certificate of correction reflecting the amount of PTA days determined by the recalculation.

Prior to the issuance of the certificate of correction, the USPTO will afford patentee an opportunity to be heard and request reconsideration. Accordingly, patentee has **one month or thirty (30) days**, whichever is longer, to file a request for reconsideration of this patent term adjustment calculation. See 35 U.S.C. 154(b)(3)(B)(ii) and 37 CFR 1.322(a)(4). No extensions of time will be granted under 37 CFR 1.136.

Patentee should use document code PET.OP if electronically filing a request for reconsideration of this patent term adjustment calculation. The patentee must also include the information required by 37 CFR 1.705(b)(2) and the fee required by 37 CFR 1.18(e). If patentee does not file a timely request for reconsideration of this patent term adjustment calculation including the information required by 37 CFR 1.705(b)(2) and the fee required by 37 CFR 1.18(e), the USPTO will issue a certificate of correction reflecting the PTA determination noted above.

Patentee should be aware that in order to preserve the right to review in the United States District Court for the District of Columbia of the USPTO patent term adjustment determination, patentee must ensure that he or she also take the steps required under 35 U.S.C. 154(b)(4)(A) in a timely manner. Nothing in the request for recalculation should be construed as providing an alternative time frame for commencing a civil action under 35 U.S.C. 154(b)(4)(A).

Any questions concerning this decision should be directed to the Office of Patent Legal Administration at 571-272-7702.

UNITED STATES PATENT AND TRADEMARK OFFICE

COMMISSIONER FOR PATENTS
UNITED STATES PATENT AND TRADEMARK OFFICE
P.O. BOX 1450
ALEXANDRIA, VA 22313-1450
www.uspto.gov

23 MAY 2007

Eric J. Lalor
BOYLE, FREDRICK, NEWHOLM,
STEIN, GRATZ S.C.
250 East Wisconsin Avenue, Suite 1030
Milwaukee, WI 53202

In re Application of	: DECISION ON
Matiash, Nichloas A.	:
US Application No.: 11/070,793	:
Filing Date: February 1, 2005	: PETITION UNDER
Attorney's File Reference: 14675.70	:
For: WELDING GUNS WITH MECHANICAL INTERFACE	: 37 CFR 1.137(b)

Applicant's "Petition for Revival of an International Application for Patent Designating the U.S. Abandoned Unintentionally Under 37 CFR 1.137(b)," filed in the United States Patent and Trademark Office (USPTO) on 10 May 2007 is **GRANTED**.

BACKGROUND

The above-identified application became abandoned for failure to failure to timely file corrected drawings as required by, and within the three month period set in, the Notice of allowability (PTO-37) mailed October 30, 2006. A courtesy Notice of Abandonment was mailed on March 27, 2007.

The petition includes the required reply in the form of corrected drawings, the statement of unintentional delay, and payment of the petition fee. No terminal disclaimer is required.

DISCUSSION

A petition to revive an abandoned application under 37 CFR 1.137(b) must be filed without intentional delay from the time the application became abandoned and/or applicant first became aware of the abandoned status of the application. A petition under 37 CFR 1.137(b) must be accompanied by (1) a proper reply, (2) the petition fee required by law, (3) a statement that the entire delay in filing the required reply from the due date for the reply until the filing of a grantable petition was unintentional, and (4) a terminal disclaimer and fee (if the international application was filed prior to June 8, 1995). A payment of the basic national fee constitutes a proper reply for entry into the national stage. A proper reply requires payment of the basic national fee and submission of a copy of the international application, if such a copy has not already been communicated by the International Bureau

The submission of the national fee and the copy of the international application satisfies 37 CFR 1.137(b)(1). The payment of the petition fee satisfies the requirement under 37 CFR

1.137(b)(2). Applicant's statement in the petition that "the entire delay in filing the required reply from the due date for the required reply until the filing of a grantable petition under 37 CFR 1.137(b) was unintentional" satisfies the requirements of 37 CFR 1.137(b)(3). A terminal disclaimer is not required because the application was filed after 08 June 1995, which satisfies the requirements of 37 CFR 1.137 (b)(4). Therefore, the requirements for a grantable petition under 37 CFR 1.137(b) have been satisfied.

CONCLUSION

The petition to revive the application abandoned under 37 CFR 1.137(b) is **GRANTED**.

The application is being returned to the Office of Publications for continued processing.

Newton Edwards
PCT Legal Administration Detailee
PCT Special Programs Office
Telephone: 571-272-3279

Leonard Smith
Supervisory PCT Legal Examiner
PCT Legal Affairs

UNITED STATES PATENT AND TRADEMARK OFFICE

Commissioner for Patents
United States Patent and Trademark Office
P.O. Box 1450
Alexandria, VA 22313-1450
www.uspto.gov

MAILED

APR 22 2010

OFFICE OF PETITIONS

LOUIS J. WILLE
BRISTOL-MYERS SQUIBB COMPANY
PATENT DEPARTMENT
P O BOX 4000
PRINCETON NJ 08543-4000

In re Patent of Nirschl et al.	: DECISION ON REQUEST FOR
Patent No. 7,625,923	: RECONSIDERATION OF
Issue Date: December 1, 2009	: PATENT TERM ADJUSTMENT
Application No. 11/070,808	: AND NOTICE OF INTENT TO ISSUE
Filed: March 2, 2005	: CERTIFICATE OF CORRECTION
Atty. Docket No. 10045-US-NP	:

This is a decision on the petition filed on December 16, 2009, which is being treated as a petition under 37 CFR 1.705(d) requesting that the patent term adjustment indicated on the above-identified patent be corrected to indicate that the term of the above-identified patent is extended or adjusted by one thousand one hundred forty-one (1,141) days.

The petition to correct the patent term adjustment indicated on the above-identified patent to indicate that the term of the above-identified patent is extended or adjusted by one thousand one hundred forty-one (1,141) days is **GRANTED to the extent indicated herein.**

Patentees' assertion of 1,141 days of patent term adjustment is derived from the following formula: 617 A Delay minus 639 B Delay minus 151 Applicant Delay (petition 3rd page). Thus, it appears patentees' final figure of 1,141 is the result of a mathematical error coupled with the failure to consider the subsequently discussed overlapping 7 day period.

Patentees calculate the period of delay under 35 U.S.C. § 154(b)(1)(B) ("B Delay") as 639 days, beginning on March 3, 2008 and ending on December 1, 2009. Patentees fail to subtract the 7 day overlapping period of delay beginning on June 7, 2008 and ending on June 13, 2008 already accounted for under 35 U.S.C. § 154(b)(1)(A) ("A Delay").

Accordingly, the correct patent term adjustment is 1,098. (617 A Delay minus 639 B Delay minus 7 overlapping days minus 151 Applicant Delay).

The Office acknowledges submission of the $200.00 fee set forth in 37 CFR 1.18(e). No additional fees are required.

The application is being forwarded to the Certificates of Correction Branch for issuance of a certificate of correction. The Office will issue a certificate of correction indicating that the term of the above-identified patent is extended or adjusted by **one thousand ninety-eight (1,098)** days.

Telephone inquiries specific to this matter should be directed to the undersigned at (571) 272-3230.

Shirene Willis Brantley

Shirene Willis Brantley
Senior Petitions Attorney
Office of Petitions

Enclosure: Copy of DRAFT Certificate of Correction

UNITED STATES PATENT AND TRADEMARK OFFICE

CERTIFICATE OF CORRECTION

PATENT : 7,625,923 B2

DATED : **December 1, 2009** **DRAFT**

INVENTOR(S) : Nirschl et al.

It is certified that error appears in the above-identified patent and that said Letters Patent is hereby corrected as shown below:

On the cover page,

[*] Notice: Subject to any disclaimer, the term of this patent is extended or adjusted under 35 USC 154(b) by 488 days

Delete the phrase "by 488 days" and insert – by 1,098 days--

UNITED STATES PATENT AND TRADEMARK OFFICE

Commissioner for Patents
United States Patent and Trademark Office
P.O. Box 1450
Alexandria, VA 22313-1450
www.uspto.gov

MORRISON & FOERSTER, LLP
555 WEST FIFTH STREET
SUITE 3500
LOS ANGELES, CA 90013-1024

COPY MAILED

SEP 02 2008

In re Application of	:	
KNAPP, Tracey E.	:	
Application No. 11/070,813	:	DECISION ON PETITION
Filed: March 02, 2005	:	TO WITHDRAW
Attorney Docket No. **480102005200**	:	FROM RECORD
	:	

This is a decision on the Request to Withdraw as attorney or agent of record under 37 C.F.R. § 1.36(b), filed May 05, 2008.

The request is **NOT APPROVED** because it is moot.

A review of the file record indicates that the power of attorney to Morrison & Foerster, LLP has been revoked by the applicant of the patent application on June 03, 2008. Accordingly, the request to withdraw under 37 C.F.R. § 1.36(b) is moot.

All future communications from the Office will continue to be directed to the below-listed address until otherwise notified by applicant.

Telephone inquires concerning this decision should be directed to Michelle R. Eason at 571-272-4231.

Michelle R. Eason
Paralegal Specialist
Office of Petitions

cc: **RUTAN & TUCKER, LLP.**
611 ANTON BLVD
SUITE 1400
COSTA MESA CA 92626

UNITED STATES PATENT AND TRADEMARK OFFICE

UNITED STATES DEPARTMENT OF COMMERCE
United States Patent and Trademark Office
Address: COMMISSIONER FOR PATENTS
P.O. Box 1450
Alexandria, Virginia 22313-1450
www.uspto.gov

DAVIS WRIGHT TREMAINE, LLP/Seattle
1201 Third Avenue, Suite 2200
SEATTLE, WA 98101-3045

Mail Date: 04/26/2010

Applicant	: Glen John Bertini	: DECISION ON REQUEST FOR
Patent Number	: 7615247	: RECALCULATION of PATENT
Issue Date	: 11/10/2009	: TERM ADJUSTMENT IN VIEW
Application No	: 11/070,818	: OF WYETH AND NOTICE OF INTENT TO
Filed	: 03/01/2005	: ISSUE CERTIFICATE OF CORRECTION
		:

The Request for Recalculation is **GRANTED** to the extent indicated.

The patent term adjustment has been determined to be **1147** days. The USPTO will *sua sponte* issue a certificate of correction reflecting the amount of PTA days determined by the recalculation.

Prior to the issuance of the certificate of correction, the USPTO will afford patentee an opportunity to be heard and request reconsideration. Accordingly, patentee has **one month or thirty (30) days**, whichever is longer, to file a request for reconsideration of this patent term adjustment calculation. See 35 U.S.C. 154(b)(3)(B)(ii) and 37 CFR 1.322(a)(4). No extensions of time will be granted under 37 CFR 1.136.

Patentee should use document code PET.OP if electronically filing a request for reconsideration of this patent term adjustment calculation. The patentee must also include the information required by 37 CFR 1.705(b)(2) and the fee required by 37 CFR 1.18(e). If patentee does not file a timely request for reconsideration of this patent term adjustment calculation including the information required by 37 CFR 1.705(b)(2) and the fee required by 37 CFR 1.18(e), the USPTO will issue a certificate of correction reflecting the PTA determination noted above.

Patentee should be aware that in order to preserve the right to review in the United States District Court for the District of Columbia of the USPTO patent term adjustment determination, patentee must ensure that he or she also take the steps required under 35 U.S.C. 154(b)(4)(A) in a timely manner. Nothing in the request for recalculation should be construed as providing an alternative time frame for commencing a civil action under 35 U.S.C. 154(b)(4)(A).

Any questions concerning this decision should be directed to the Office of Patent Legal Administration at 571-272-7702.

UNITED STATES PATENT AND TRADEMARK OFFICE

Commissioner for Patents
United States Patent and Trademark Office
P.O. Box 1450
Alexandria, VA 22313-1450
www.uspto.gov

BERKELEY LAW & TECHNOLOGY GROUP, LLP
1700 NW 167TH PLACE
SUITE 240
BEAVERTON OR 97006

COPY MAILED

APR 17 2007

OFFICE OF PETITIONS

In re Application of :
Tseng :
Application No. 11/070,820 : ON PETITION
Filed: March 2, 2005 :
Attorney Docket No. 112.P77263 :
For: MULTI-ANGULAR TRIMMING APPARATUS

This is a decision on the petition filed March 28, 2007, entitled, "PETITION UNDER 37 CFR 1.47(b) FOR NON-SIGNING INVENTOR." The petition will be treated as a petition under CFR 1.183, requesting waiver of 37 CFR 1.63 and 1.67, which requires an inventor to execute a supplemental declaration.[1]

The petition under 37 CFR 1.183 to waive 37 CFR 1.63 and 1.67 is **DISMISSED**.

The petition under 37 CFR 1.47(a) is **DISMISSED AS MOOT**.

Any request for reconsideration of this decision must be submitted within TWO (2) MONTHS from the mail date of this decision. Extensions of time under 37 CFR 1.136(a) are permitted. Any response should be entitled "Request for Reconsideration of Petition Under 37 CFR 1.183 to waive 37 CFR 1.63 and 1.67" and may include an oath or declaration executed by the inventor. **Failure to respond will result in abandonment of the application.**

While this waiver petition is not a petition under 37 CFR 1.47(b), it is evaluated in much the same way a Rule 47(b) petition is. Therefore, a grantable petition requires:

(1) proof that the non-signing inventor cannot be reached or refuses to sign the oath or declaration;
(2) an acceptable oath or declaration;

[1] Once an application has received a fully executed oath or declaration and been placed on the files for examination, the provisions of 37 CFR 1.47 no longer apply. Rather, the remedy for treating an inventor's refusal or unavailability to sign a supplemental oath or declaration is waiver of 37 CFR 1.67. See MPEP 603.

(3) the petition fee;
(4) a statement of the last known address of the non-signing inventor;
(5) proof of proprietary interest; and
(6) proof of irreparable damage.

Applicant lacks items (2) and (6) set forth above.

As to item (2), an oath or declaration for the patent application in compliance with 37 CFR 1.63 and 1.64 still has not been presented. No one has signed the supplemental declaration. The supplemental declaration should be signed by an officer of the corporation (President, Vice-President, Secretary, Treasurer of Chief Executive Officer). A corporation may authorize any person to sign the application on its behalf. However, if the declaration is not signed by an attorney or officer of the corporation, then proof of authority of the person signing on behalf of the corporation must be submitted. MPEP 409.03(b)

As to item (6), petitioner has failed to provide proof of irreparable damage (see MPEP 409.03(g)). A statement by petitioner that the filing is necessary to preserve the its rights would be sufficient.

It is noted that petitioner filed a statement under 37 CFR 3.73(b) on August 21, 2006. The statement under 37 CFR 3.73(b) lists the chain of title from the inventor to the current assignee, Transpacific Plasma, LLC. Celia C. Dunham is authorized to act on behalf of the assignee.

Regarding fees, pursuant to petitioner's authorization, the current Rule 183 petition fee of $400.00will be charged to deposit account no. 50-3703.

Further correspondence with respect to this matter should be addressed as follows:

By mail:
Mail Stop PETITION
Commissioner for Patents
Post Office Box 1450
Alexandria, VA 22313-1450

By hand:
U.S. Patent and Trademark Office
Customer Service Window, Mail Stop Petition
Randolph Building
401 Dulany Street
Alexandria, VA 22314

By FAX:
(571) 273-8300 - ATTN: Office of Petitions

Telephone inquiries should be directed to the undersigned at (571) 272-3230.

Shirene Willis Brantley

Shirene Willis Brantley
Senior Petitions Attorney
Office of Petitions

UNITED STATES PATENT AND TRADEMARK OFFICE

Commissioner for Patents
United States Patent and Trademark Office
P.O. Box 1450
Alexandria, VA 22313-1450
www.uspto.gov

BERKELEY LAW & TECHNOLOGY GROUP, LLP
1700 NW 167TH PLACE
SUITE 240
BEAVERTON OR 97006

COPY MAILED

JUL 23 2007

OFFICE OF PETITIONS

In re Application of :
Tseng :
Application No. 11/070,820 : ON PETITION
Filed: March 2, 2005 :
Attorney Docket No. 112.P77263 :
For: MULTI-ANGULAR TRIMMING APPARATUS

This is a decision on the reconsideration petition filed June 18, 2007 under CFR 1.183, requesting waiver of 37 CFR 1.63 and 1.67, which requires an inventor to execute a supplemental declaration.

The petition under 37 CFR 1.183 requesting waiver of 37 CFR 1.63 and 1.67 is **granted**.

The concurrently filed supplemental declaration that lacks sole inventor Tzu-Feng Tseng's signature, but contains Attorney Celia C. Dunham's signature, has been accepted, on petition, and placed in the file.

After the mailing of this decision, the application will be returned to Technology Center A.U. 3724 for consideration of the amendment filed on January 10, 2007 and all subsequently filed correspondence.

Telephone inquiries related to this decision should be directed to the undersigned at (571) 272-3230.

Shirene Willis Brantley

Shirene Willis Brantley
Senior Petitions Attorney
Office of Petitions
Office of the Deputy Commissioner
for Patent Examination Policy

UNITED STATES PATENT AND TRADEMARK OFFICE

UNITED STATES DEPARTMENT OF COMMERCE
United States Patent and Trademark Office
Address: COMMISSIONER FOR PATENTS
P.O. Box 1450
Alexandria, Virginia 22313-1450
www.uspto.gov

Lipsitz & McAllister, LLC
755 MAIN STREET
MONROE, CT 06468

Mail Date: 04/20/2010

Applicant	: Ulrich Kramer	: DECISION ON REQUEST FOR
Patent Number	: 7591838	: RECALCULATION of PATENT
Issue Date	: 09/22/2009	: TERM ADJUSTMENT IN VIEW
Appliction No	: 11/070,826	: OF WYETH AND NOTICE OF INTENT TO
Filed	: 03/01/2005	: ISSUE CERTIFICATE OF CORRECTION
		:

The Request for Recalculation is **GRANTED** to the extent indicated.

The patent term adjustment has been determined to be **1123** days. The USPTO will *sua sponte* issue a certificate of correction reflecting the amount of PTA days determined by the recalculation.

Prior to the issuance of the certificate of correction, the USPTO will afford patentee an opportunity to be heard and request reconsideration. Accordingly, patentee has **one month or thirty (30) days**, whichever is longer, to file a request for reconsideration of this patent term adjustment calculation. See 35 U.S.C. 154(b)(3)(B)(ii) and 37 CFR 1.322(a)(4). No extensions of time will be granted under 37 CFR 1.136.

Patentee should use document code PET.OP if electronically filing a request for reconsideration of this patent term adjustment calculation. The patentee must also include the information required by 37 CFR 1.705(b)(2) and the fee required by 37 CFR 1.18(e). If patentee does not file a timely request for reconsideration of this patent term adjustment calculation including the information required by 37 CFR 1.705(b)(2) and the fee required by 37 CFR 1.18(e), the USPTO will issue a certificate of correction reflecting the PTA determination noted above.

Patentee should be aware that in order to preserve the right to review in the United States District Court for the District of Columbia of the USPTO patent term adjustment determination, patentee must ensure that he or she also take the steps required under 35 U.S.C. 154(b)(4)(A) in a timely manner. Nothing in the request for recalculation should be construed as providing an alternative time frame for commencing a civil action under 35 U.S.C. 154(b)(4)(A).

Any questions concerning this decision should be directed to the Office of Patent Legal Administration at 571-272-7702.

UNITED STATES PATENT AND TRADEMARK OFFICE

UNITED STATES DEPARTMENT OF COMMERCE
United States Patent and Trademark Office
Address: COMMISSIONER FOR PATENTS
P.O. Box 1450
Alexandria, Virginia 22313-1450
www.uspto.gov

LIFE TECHNOLOGIES CORPORATION
C/O INTELLEVATE
P.O. BOX 52050
MINNEAPOLIS, MN 55402

Mail Date: 04/21/2010

Applicant	: Ronald J. Berenson	: DECISION ON REQUEST FOR
Patent Number	: 7572631	: RECALCULATION of PATENT
Issue Date	: 08/11/2009	: TERM ADJUSTMENT IN VIEW
Appliction No	: 11/070,841	: OF WYETH AND NOTICE OF INTENT TO
Filed	: 03/02/2005	: ISSUE CERTIFICATE OF CORRECTION
		:

The Request for Recalculation is **GRANTED** to the extent indicated.

The patent term adjustment has been determined to be **445** days. The USPTO will *sua sponte* issue a certificate of correction reflecting the amount of PTA days determined by the recalculation.

Prior to the issuance of the certificate of correction, the USPTO will afford patentee an opportunity to be heard and request reconsideration. Accordingly, patentee has **one month or thirty (30) days**, whichever is longer, to file a request for reconsideration of this patent term adjustment calculation. See 35 U.S.C. 154(b)(3)(B)(ii) and 37 CFR 1.322(a)(4). No extensions of time will be granted under 37 CFR 1.136.

Patentee should use document code PET.OP if electronically filing a request for reconsideration of this patent term adjustment calculation. The patentee must also include the information required by 37 CFR 1.705(b)(2) and the fee required by 37 CFR 1.18(e). If patentee does not file a timely request for reconsideration of this patent term adjustment calculation including the information required by 37 CFR 1.705(b)(2) and the fee required by 37 CFR 1.18(e), the USPTO will issue a certificate of correction reflecting the PTA determination noted above.

Patentee should be aware that in order to preserve the right to review in the United States District Court for the District of Columbia of the USPTO patent term adjustment determination, patentee must ensure that he or she also take the steps required under 35 U.S.C. 154(b)(4)(A) in a timely manner. Nothing in the request for recalculation should be construed as providing an alternative time frame for commencing a civil action under 35 U.S.C. 154(b)(4)(A).

Any questions concerning this decision should be directed to the Office of Patent Legal Administration at 571-272-7702.

UNITED STATES PATENT AND TRADEMARK OFFICE

UNITED STATES DEPARTMENT OF COMMERCE
United States Patent and Trademark Office
Address: COMMISSIONER FOR PATENTS
P.O. Box 1450
Alexandria, Virginia 22313-1450
www.uspto.gov

LIFE TECHNOLOGIES CORPORATION
C/O INTELLEVATE
P.O. BOX 52050
MINNEAPOLIS, MN 55402

Mail Date: 05/18/2010

Applicant : Ronald J. Berenson
Patent Number : 7572631
Issue Date : 08/11/2009
Application No : 11/070,841
Filed : 03/02/2005

: NOTICE CONCERNING IMPROPER
: CALCULATION OF PATENT TERM
: ADJUSTMENT BASED UPON USPTO
: IMPROPERLY MEASURING REDUCTION
: PERIOD UNDER 37 CFR 1.704(c)(10).

The United States Patent and Trademark Office (USPTO) discovered that in processing the recent recalculation decisions mailed in response to patentee's filed Request for Recalculation of Patent Term Adjustment in view of Wyeth, the USPTO improperly measured the reduction period for reductions under 37 CFR 1.704(c)(10). Pursuant to 37 CFR 1.704(c)(10), patentee's reduction begins on the date of filing the amendment under 37 CFR 1.312 ("1.312 amendment") or other related paper and ends on the date that the Office mails a response to the filing of the 1.312 amendment or other paper. It has been discovered that during the recalculation, the calculation failed to the limit the reduction to the mail date of the response to the 1.312 amendment or other paper. Accordingly, patentee's reductions were greater than warranted.

This notice **VACATES** the previous GRANTED request for recalculation and provides patentee with a revised GRANTED recalculation.

The patent term adjustment has been determined to be **477** days. The USPTO will *sua sponte* issue a certificate of correction reflecting the amount of patent term adjustment (PTA) days determined by the recalculation.

Prior to the issuance of the certificate of correction, the USPTO will afford patentee an opportunity to be heard and request reconsideration. Accordingly, patentee has **one month or thirty (30) days** from the mail date of this notice, whichever is longer, to file a request for reconsideration of this PTA calculation. See 35 U.S.C. § 154(b)(3)(B)(ii) and 37 CFR 1.322(a)(4).

Patentee should use document code PET.OP if electronically filing a request for reconsideration of this PTA calculation. The patentee must also include the information required by 37 CFR 1.705(b)(2), and the fee required by 37 CFR 1.18(e). If patentee does not file a timely request for reconsideration of this PTA calculation, including the information required by 37 CFR 1.705(b)(2) and the fee required by 37 CFR 1.18(e), the USPTO will issue a certificate of correction reflecting the PTA determination noted above.

Patentee should be aware that in order to preserve the right of review of the USPTO's PTA determination in the United States District Court for the District of Columbia, patentee must ensure that the steps required under 35 U.S.C. § 154 (b)(4) are taken in a timely manner. Nothing in the request for recalculation should be construed as providing an alternative time frame for commencing a civil action under 35 U.S.C. § 154(b)(4).

UNITED STATES PATENT AND TRADEMARK OFFICE

Commissioner for Patents
United States Patent and Trademark Office
P.O. Box 1450
Alexandria, VA 22313-1450
www.uspto.gov

MAILED

APR 13 2009

OFFICE OF PETITIONS

LEWIS AND ROCA LLP
1663 HWY 395, SUITE 201
MINDEN, NV 89423

In re Application of	:	
Christopher D. Coley et al	:	
Application No. 11/070,847	:	ON PETITION
Filed: March 1, 2005	:	
Attorney Docket No. GRAPH-004COD	:	

This is a decision on the petition under 37 CFR 1.137(b), filed March 18, 2009, to revive the above-identified application.

The petition is **GRANTED.**

The above-identified application became abandoned for failure to reply in a timely manner to the non-final Office action mailed September 17, 2008, which set a shortened statutory period for reply of three (3) months. No extension of time under the provisions of 37 CFR 1.136(a) were obtained. Accordingly, the above-identified application became abandoned on December 18, 2008.

Telephone inquiries concerning this decision should be directed to Irvin Dingle at (571) 272-3210.

This matter is being referred to Technology Center AU 2431 for further processing.

Irvin Dingle
Petitions Examiner
Office of Petitions

UNITED STATES PATENT AND TRADEMARK OFFICE

UNITED STATES DEPARTMENT OF COMMERCE
United States Patent and Trademark Office
Address: COMMISSIONER FOR PATENTS
P.O. Box 1450
Alexandria, Virginia 22313-1450
www.uspto.gov

SHUMAKER & SIEFFERT, P. A.
1625 RADIO DRIVE
SUITE 300
WOODBURY, MN 55125

Mail Date: 04/20/2010

Applicant	: Jonathan Sparks	: DECISION ON REQUEST FOR
Patent Number	: 7590653	: RECALCULATION of PATENT
Issue Date	: 09/15/2009	: TERM ADJUSTMENT IN VIEW
Appliction No	: 11/070,851	: OF WYETH AND NOTICE OF INTENT TO
Filed	: 03/02/2005	: ISSUE CERTIFICATE OF CORRECTION
		:

The Request for Recalculation is **GRANTED** to the extent indicated.

The patent term adjustment has been determined to be **938** days. The USPTO will *sua sponte* issue a certificate of correction reflecting the amount of PTA days determined by the recalculation.

Prior to the issuance of the certificate of correction, the USPTO will afford patentee an opportunity to be heard and request reconsideration. Accordingly, patentee has **one month or thirty (30) days**, whichever is longer, to file a request for reconsideration of this patent term adjustment calculation. See 35 U.S.C. 154(b)(3)(B)(ii) and 37 CFR 1.322(a)(4). No extensions of time will be granted under 37 CFR 1.136.

Patentee should use document code PET.OP if electronically filing a request for reconsideration of this patent term adjustment calculation. The patentee must also include the information required by 37 CFR 1.705(b)(2) and the fee required by 37 CFR 1.18(e). If patentee does not file a timely request for reconsideration of this patent term adjustment calculation including the information required by 37 CFR 1.705(b)(2) and the fee required by 37 CFR 1.18(e), the USPTO will issue a certificate of correction reflecting the PTA determination noted above.

Patentee should be aware that in order to preserve the right to review in the United States District Court for the District of Columbia of the USPTO patent term adjustment determination, patentee must ensure that he or she also take the steps required under 35 U.S.C. 154(b)(4)(A) in a timely manner. Nothing in the request for recalculation should be construed as providing an alternative time frame for commencing a civil action under 35 U.S.C. 154(b)(4)(A).

Any questions concerning this decision should be directed to the Office of Patent Legal Administration at 571-272-7702.

UNITED STATES PATENT AND TRADEMARK OFFICE

UNITED STATES DEPARTMENT OF COMMERCE
United States Patent and Trademark Office
Address: COMMISSIONER FOR PATENTS
P.O. Box 1450
Alexandria, Virginia 22313-1450
www.uspto.gov

SHUMAKER & SIEFFERT, P. A.
1625 RADIO DRIVE
SUITE 300
WOODBURY, MN 55125

Mail Date: 05/17/2010

Applicant : Jonathan Sparks
Patent Number : 7590653
Issue Date : 09/15/2009
Application No : 11/070,851
Filed : 03/02/2005

: NOTICE CONCERNING IMPROPER
: CALCULATION OF PATENT TERM
: ADJUSTMENT BASED UPON USPTO
: IMPROPERLY MEASURING REDUCTION
: PERIOD UNDER 37 CFR 1.704(c)(10).

The United States Patent and Trademark Office (USPTO) discovered that in processing the recent recalculation decisions mailed in response to patentee's filed Request for Recalculation of Patent Term Adjustment in view of Wyeth, the USPTO improperly measured the reduction period for reductions under 37 CFR 1.704(c)(10). Pursuant to 37 CFR 1.704(c)(10), patentee's reduction begins on the date of filing the amendment under 37 CFR 1.312 ("1.312 amendment") or other related paper and ends on the date that the Office mails a response to the filing of the 1.312 amendment or other paper. It has been discovered that during the recalculation, the calculation failed to the limit the reduction to the mail date of the response to the 1.312 amendment or other paper. Accordingly, patentee's reductions were greater than warranted.

This notice **VACATES** the previous GRANTED request for recalculation and provides patentee with a revised GRANTED recalculation.

The patent term adjustment has been determined to be **995** days. The USPTO will *sua sponte* issue a certificate of correction reflecting the amount of patent term adjustment (PTA) days determined by the recalculation.

Prior to the issuance of the certificate of correction, the USPTO will afford patentee an opportunity to be heard and request reconsideration. Accordingly, patentee has **one month or thirty (30) days** from the mail date of this notice, whichever is longer, to file a request for reconsideration of this PTA calculation. See 35 U.S.C. § 154(b)(3)(B)(ii) and 37 CFR 1.322(a)(4).

Patentee should use document code PET.OP if electronically filing a request for reconsideration of this PTA calculation. The patentee must also include the information required by 37 CFR 1.705(b)(2), and the fee required by 37 CFR 1.18(e). If patentee does not file a timely request for reconsideration of this PTA calculation, including the information required by 37 CFR 1.705(b)(2) and the fee required by 37 CFR 1.18(e), the USPTO will issue a certificate of correction reflecting the PTA determination noted above.

Patentee should be aware that in order to preserve the right of review of the USPTO's PTA determination in the United States District Court for the District of Columbia, patentee must ensure that the steps required under 35 U.S.C. § 154 (b)(4) are taken in a timely manner. Nothing in the request for recalculation should be construed as providing an alternative time frame for commencing a civil action under 35 U.S.C. § 154(b)(4).

UNITED STATES PATENT AND TRADEMARK OFFICE

Commissioner for Patents
United States Patent and Trademark Office
P.O. Box 1450
Alexandria, VA 22313-1450
www.uspto.gov

SLATER & MATSIL LLP
17950 PRESTON ROAD
SUITE 1000
DALLAS, TX 75252

COPY MAILED

JUN 28 2005

OFFICE OF PETITIONS

In re Application of
Costrini, Hummel, Stojakovic, and Low
Application No.: 11/070,856
Filed: March 2, 2005
Attorney Docket No: 2002 P09125CP1
For: MAGNETIC SWITCHING DEVICE

: DECISION ACCORDING
: RULE 47(a) STATUS

This is in response to the petition under 37 CFR 1.47(a), filed June 3, 2005 (certificate of mailing dated May 31, 2005.)

The petition is **GRANTED**.

The above-identified application and papers have been reviewed and found in compliance with 37 CFR 1.47(a). This application is hereby accorded Rule 1.47(a) status.

The above-cited application was filed on March 2, 2005 and was not accompanied by a properly executed declaration. A Notice to File Missing Parts of Nonprovisional Application was mailed on March 29, 2005, indicating that the declaration, surcharge, filing fee and search fee were missing and allowing a two month period in which the missing items could be filed. On June 3, 2005, the instant petition was filed, responsively.

Petitioner has shown that inventor Low has constructively refused to execute the declaration and join the above-identified application The above-identified application and papers have been reviewed and found in compliance with 37 CFR 1.47(a). This application is hereby accorded Rule 1.47(a) status.

As provided in Rule 1.47(c), this Office will forward notice of this application's filing to the non-signing inventors at the addresses given in the petition. Notice of the filing of this application will also be published in the Official Gazette.

This application will be forwarded to the Office of Initial Patent Examination for further processing.

Telephone inquiries should be directed to the undersigned at (571) 272-3222.

Kenya A. McLaughlin
Petitions Attorney
Office of Petitions

UNITED STATES PATENT AND TRADEMARK OFFICE

Commissioner for Patents
United States Patent and Trademark Office
P.O. Box 1450
Alexandria, VA 22313-1450
www.uspto.gov

TEJINDER SINGH
KLEIN O'NEILL & SINGH LLP
2 PARK PLAZA, SUITE 510
IRVINE, CA 92614

COPY MAILED

JUL 07 2006

OFFICE OF PETITIONS

In re Application of	:
William C. Terrell et al	: DECISION ON PETITION
Application No. 11/070,858	: UNDER 37 CFR 1.137(b)
Filed: March 1, 2005	:
Attorney Docket No. 59244-20002.01 (QT1190-CON)	:

This is a decision on the petition under 37 CFR 1.137(b), filed January 26, 2006, to revive the above-identified application.

The petition is **granted**.

The above-identified application became abandoned for failure to reply in a timely manner to the Notice to File Missing Parts of Nonprovisional Application (Notice) mailed March 29, 2005. The Notice set a period for reply of two (2) months from the mail date of the Notice. No extensions of time under the provisions of 37 CFR 1.136(a) were obtained. Accordingly, the above-identified application became abandoned on May 30, 2005. A Notice of Abandonment was mailed on December 7, 2005.

The petition is accompanied by the reply to the Notice of March 29, 2005, the petition fee of $1,500, and an adequate statement of unintentional delay. Accordingly, as the petition satisfies the requirements of 37 CFR 1.137(b), the reply to the Notice of March 29, 2005 is accepted as having been unintentionally delayed.

It is not apparent whether the person signing the statement of unintentional delay was in a position to have firsthand or direct knowledge of the facts and circumstances of the delay at issue. Nevertheless, such statement is being treated as having been made as the result of a reasonable inquiry into the facts and circumstances of such delay. *See* 37 CFR 10.18(b) and Changes to Patent Practice and Procedure; Final Rule Notice, 62 Fed. Reg. 53131, 53178 (October 10, 1997), 1203 Off. Gaz. Pat. Office 63, 103 (October 21, 1997). In the event that such an inquiry has

not been made, petitioner must make such an inquiry. If such inquiry results in the discovery that it is not correct that the entire delay in filing the required reply from the due date for the reply until the filing of a grantable petition pursuant to 37 CFR 1.137(b) was unintentional, petitioner must notify the Office.

A review of the application file indicates that, upon filing, small entity status was claimed. The presently filed papers do not indicate that this application no longer qualifies as small entity status as required by 37 CFR 1.27(g)(2), although the fees submitted were those for a large entity. If small entity status is no longer appropriate, petitioner should promptly notify the Office in accordance with 37 CFR 1.27(g)(2). If, however, small entity status is proper for this application, petitioner may request a refund of a portion of the fees submitted. *Note* 37 CFR 1.28. As there is no indication that this application no longer qualifies for small entity status, this application retains its small entity status until properly notified by applicant.

Inquiries related to this communication should be directed to the undersigned at (571) 272-3218.

This matter is being referred to the Office of Initial Patent Examination for pre-examination processing.

Frances Hicks

Frances Hicks
Petitions Examiner
Office of Petitions

UNITED STATES PATENT AND TRADEMARK OFFICE

UNITED STATES DEPARTMENT OF COMMERCE
United States Patent and Trademark Office
Address: COMMISSIONER FOR PATENTS
P.O. Box 1450
Alexandria, Virginia 22313-1450
www.uspto.gov

SYNTHES
1302 WRIGHTS LANE EAST
WEST CHESTER, PA 19380

Mail Date: 04/21/2010

Applicant	: Maurice Yves Mommaerts	: DECISION ON REQUEST FOR
Patent Number	: 7588579	: RECALCULATION of PATENT
Issue Date	: 09/15/2009	: TERM ADJUSTMENT IN VIEW
Appliction No	: 11/070,862	: OF WYETH AND NOTICE OF INTENT TO
Filed	: 03/02/2005	: ISSUE CERTIFICATE OF CORRECTION
		:

The Request for Recalculation is **GRANTED** to the extent indicated.

The patent term adjustment has been determined to be **159** days. The USPTO will *sua sponte* issue a certificate of correction reflecting the amount of PTA days determined by the recalculation.

Prior to the issuance of the certificate of correction, the USPTO will afford patentee an opportunity to be heard and request reconsideration. Accordingly, patentee has **one month or thirty (30) days**, whichever is longer, to file a request for reconsideration of this patent term adjustment calculation. See 35 U.S.C. 154(b)(3)(B)(ii) and 37 CFR 1.322(a)(4). No extensions of time will be granted under 37 CFR 1.136.

Patentee should use document code PET.OP if electronically filing a request for reconsideration of this patent term adjustment calculation. The patentee must also include the information required by 37 CFR 1.705(b)(2) and the fee required by 37 CFR 1.18(e). If patentee does not file a timely request for reconsideration of this patent term adjustment calculation including the information required by 37 CFR 1.705(b)(2) and the fee required by 37 CFR 1.18(e), the USPTO will issue a certificate of correction reflecting the PTA determination noted above.

Patentee should be aware that in order to preserve the right to review in the United States District Court for the District of Columbia of the USPTO patent term adjustment determination, patentee must ensure that he or she also take the steps required under 35 U.S.C. 154(b)(4)(A) in a timely manner. Nothing in the request for recalculation should be construed as providing an alternative time frame for commencing a civil action under 35 U.S.C. 154(b)(4)(A).

Any questions concerning this decision should be directed to the Office of Patent Legal Administration at 571-272-7702.

UNITED STATES PATENT AND TRADEMARK OFFICE

COMMISSIONER FOR PATENTS
UNITED STATES PATENT AND TRADEMARK OFFICE
P.O. BOX 1450
ALEXANDRIA, VA 22313-1450
www.uspto.gov
DIW Aug-07

CHRISTIE, PARKER & HALE, LLP
PO BOX 7068
PASADENA CA 91109-7068

COPY MAILED

AUG 10 2007

OFFICE OF PETITIONS

In re Application of	:	
Biedermann et al.	:	
Application Number: 11/070873	:	DECISION ON PETITION
Filing Date: 03/02/2005	:	
Attorney Docket Number:	:	
B884:56727	:	

This is a decision on the petition filed on 12 June, 2007, under 37 CFR 1.137(b),[1] to revive the above-identified application.

The petition is **GRANTED**.

The application became abandoned on 21 November, 2006, for failure to timely reply to the Office action requiring restriction and/or election mailed on 20 October, 2006, which set a one (1) month shortened statutory period for reply. No

---

[1] Effective December 1, 1997, the provisions of 37 CFR 1.137(b) now provide that where the delay in reply was unintentional, a petition may be filed to revive an abandoned application or a lapsed patent pursuant to 37 CFR 1.137(b). A grantable petition filed under the provisions of 37 CFR 1.137(b) must be accompanied by:

(1) the required reply, unless previously filed. In a nonprovisional application abandoned for failure to prosecute, the required reply may be met by the filing of a continuing application. In a nonprovisional utility or plant application filed on or after June 8, 1995, and abandoned for failure to prosecute, the required reply may also be met by the filing of a request for continuing examination in compliance with § 1.114. In an application or patent, abandoned or lapsed for failure to pay the issue fee or any portion thereof, the required reply must be the payment of the issue fee or any outstanding balance thereof. In an application, abandoned for failure to pay the publication fee, the required reply must include payment of the publication fee.

(2) the petition fee as set forth in 37 CFR 1.17(m);

(3) a statement that the entire delay in filing the required reply from the due date for the reply until the filing of a grantable petition pursuant to 37 CFR 1.137(b) was unintentional. The Commissioner may required additional information where there is a question whether the delay was unintentional; and

(4) any terminal disclaimer (and fee as set forth in 37 CFR 1.20(d)) required pursuant to 37 CFR 1.137(c)).

extensions of time under 37 CFR 1.136(a) were obtained. Notice of Abandonment was mailed on 8 June, 2007.

Petitioners have filed an election with traverse with the present petition.

The statement contained in the instant petition does not set forth that the entire delay from the due date of the required reply to the date of the filing of a grantable petition was unintentional as required by 37 CFR 1.137(b)(3). However, the statement contained in the instant petition is being so construed. Petitioner **must** notify the Office if this is not a correct interpretation.

This application is being referred to Technology Center Art Unit 3733 for further processing.

Telephone inquiries concerning this matter may be directed to the undersigned at (571)272-3231.

D Wood

Douglas I. Wood
Senior Petitions Attorney
Office of Petitions

UNITED STATES PATENT AND TRADEMARK OFFICE

Commissioner for Patents
United States Patent and Trademark Office
P.O. Box 1450
Alexandria, VA 22313-1450
www.uspto.gov

BONIARD I. BROWN
SUITE 200
1710 WEST CAMERON AVENUE
WEST COVINA, CA 91790

COPY MAILED

OCT 0 6 2006

OFFICE OF PETITIONS

In re Application of

Fred I. White
Application No. 11/070,876
Filed: March 3, 2005
Attorney Docket No. 7068

DECISION ON PETITION
TO MAKE SPECIAL UNDER
37 CFR 1.102(c)(1)

This is a decision on the petition under 37 CFR 1.102(c)(1), filed March 3, 2005, to make the above-identified application special based on applicant's age as set forth in M.P.E.P. § 708.02, Section IV.

The petition is **GRANTED**.

A grantable petition to make an application special under 37 CFR 1.102(c)(1) and MPEP § 708.02, Section IV: Applicant's Age must be accompanied by evidence showing that at least one of the applicants is 65 years of age, or more, such as a birth certificate or a statement by applicant. No fee is required

The instant petition includes a statement from Inventor Fred I. White stating that he is over 65 years of age. Accordingly, the above-identified application has been accorded "special" status.

Telephone inquiries concerning this decision should be directed to Irvin Dingle at 571-272-3210.

All other inquiries concerning either the examination or status of the application should be directed to the Technology Center.

The application is being forwarded to the Technology Center Art Unit 2837 for action on the merits commensurate with this decision.

Irvin Dingle
Petitions Examiner
Office of Petitions

UNITED STATES PATENT AND TRADEMARK OFFICE

UNITED STATES DEPARTMENT OF COMMERCE
United States Patent and Trademark Office
Address: COMMISSIONER FOR PATENTS
P.O. Box 1450
Alexandria, Virginia 22313-1450
www.uspto.gov

APPLICATION NO.	FILING DATE	FIRST NAMED INVENTOR	ATTORNEY DOCKET NO.	CONFIRMATION NO.
11/070,891	03/03/2005	Randy L. Beavers	Goldenseal-1	3869

7590 05/15/2008

Dr. O. M. (Sam) Zaghmout
8509 Kernon Ct
Lorton, VA 22079

EXAMINER
WINSTON, RANDALL O

ART UNIT	PAPER NUMBER
1655	

MAIL DATE	DELIVERY MODE
05/15/2008	PAPER

Please find below and/or attached an Office communication concerning this application or proceeding.

The time period for reply, if any, is set in the attached communication.

UNITED STATES PATENT AND TRADEMARK OFFICE

Commissioner for Patents
United States Patent and Trademark Office
P.O. Box 1450
Alexandria, VA 22313-1450
www.uspto.gov

MAY 1 5 2008

DR. O.M. (SAM) ZAGHMOUT
8509 Kernon Ct
Lorton, VA 22079

In re Application of:	:
Randy L. Beavers	: PETITION DECISION
Serial No.: 11/070,891	:
Filed: March 3, 2005	:
Attorney Docket No.: Goldenseal-1	

This is in response to the petition filed April 23, 2008, requesting that the finality of the Office action of April 4, 2008 be withdrawn. While the petition does not explicitly indicate that it was filed under 37 CFR § 1.181, the subject of the petition is withdrawal of finality, which is governed by 37 CFR § 1.181. Thus, it is considered that applicant intended to file this petition under 37 CFR § 1.181.

BACKGROUND

More recently, the examiner mailed a non-final Office action on September 7, 2007 setting a three month statutory limit for reply. At the time of this non-final Office action, claims 1-36 were pending in the application, claims 1-11, 18 and 27-36 were withdrawn from consideration on the merits as being directed toward a non-elected invention and claims 12-17 and 19-26 were examined on their merits. The examiner rejected claims 12-17 and 19-26 under 35 U.S.C. 112, second paragraph, as being indefinite for failing to particularly point out and distinctly claim the subject matter which applicant regards as the invention, rejected claims 12-17 and 19-26 under 35 U.S.C. 112, first paragraph for lacking scope of enablement and rejected claims 12-17 and 19-26 under 35 U.S.C. 103(a) as being unpatentable over Tigunait et al. (WO 2004/011017).

In reply to the non-final Office action of September 7, 2007, applicant filed remarks and arguments, along with an amendment on January 7, 2008, amending claims 12-26.

On April 4, 2008, the examiner mailed a final Office action setting a three month statutory limit for reply. At the time of this final Office action, claims 1-36 were pending in the application, claims 1-11, 18 and 27-36 were withdrawn from consideration on the merits as being directed toward a non-elected invention and claims 12-17 and 19-26 were examined on their merits. The examiner rejected claims 12-17 and 19-26 under 35 U.S.C. 112, second paragraph, as being indefinite for failing to particularly point out and distinctly claim the subject matter which applicant regards as the invention, maintained the rejection of claims 12-17 and 19-26 under 35 U.S.C. 112, first paragraph, for lacking scope of enablement , rejected claims 12-13 and 15 under 35 U.S.C. 102(e) as being anticipated by Tigunait et al. (US 2004/0091556), rejected claims 12-13 and 15 under 35 U.S.C. 102(b) as being anticipated by Ho et al. (US 5,178,865), rejected claims 12-13 and 15 under 35 U.S.C. 102(e) as being anticipated by Schwartz (US 20040219508) and rejected claims 12-17, 19-20 and 23-26 under 35 U.S.C. 103(a) as being unpatentable over Schwartz (US 20040219508).

In response thereto, applicant filed this petition on April 23, 2008, requesting that the finality of the Office action of April 4, 2008 be withdrawn.

DISCUSSION

The petition and the file history have been carefully considered.

In the petition filed on April 23, 2008, applicants argue that although the examiner indicated in the final Office action that the newly instituted rejections were necessitated by applicant's amendments, applicant contrarily contends that the amendments submitted on January 7, 2007 were placed merely as an "...effort to avoid rejections under 356 U.S.C. 112 and were more of a clarifying nature rather than a change of either the invention or the subject matter claimed." Applicant thus requests that the final Office action of April 4, 2008 be withdrawn in order to allow applicant adequate time to respond to the Office action of April 4, 2008, as well as to schedule an interview with the examiner.

The applicant specifically states:

> This paper is being filed in response to the Final Rejection mailed April 4, 2008. In this Office action, the Examiner has raised several new grounds of rejection under both 35 U.S.C. 102 and 35 U.S.C. 103 as well as certain rejections under 35 U.S.C. 112, first and second paragraph. In the interest of permitting applicant sufficient time to prepare a complete response to these new grounds of rejections as well as the opportunity to have these issues fully explored prior to the filing of any appeal found necessary, applicant requests that the finality of the office action of April 4, 2008 be withdrawn and a non- final office action issue in place thereof.
> The most recent Office action includes three (3) new rejections under 35 U.S.C 102 (b) over references not previously cited or relied upon. In addition, the new Office action includes a rejection under 35 U.S.C. 103(a) over one of the newly cited references.

Finality of second Office actions is governed by MPEP § 706.07(a) which states:

> Under present practice, second or any subsequent actions on the merits shall be final, except where the examiner introduces a new ground of rejection that is neither necessitated by applicant's amendment of the claims nor based on information submitted in an information disclosure statement filed during the period set forth in 37 CFR 1.97(c) with the fee set forth in 37 CFR § 1.17(p).

It must be first noted that the rejection made by the examiner in the final Office action under 35 USC 112, first paragraph, was merely maintained from the non-final Office action and hence, was not a new rejection as asserted by applicant. Secondly, the new art rejections made by the examiner in the final Office action comprised 2 new rejections under 35 USC 102(e) and a new rejection under 35 USC 102(b); not three new rejections under 35 USC 102(b) as applicant contends.

With regard to the new rejections set forth by the examiner under 35 USC 102(e) and 102(b) in the final Office action, while applicant's amendments to claims 12-16 submitted on January 7, 2007 may have been intended merely to overcome the original rejections made by the examiner under 35 USC 112, second paragraph, the amendments also changed the scope of the claimed invention; contrary to applicant's assertions. For example, claim 12, part (b) prior to the amendment of January 7, 2007 stated:

> (b) conducting at least one pharmacological test known to correlate with a changed biological state of a living organism on each plant extract

While claim 12, part (b) upon amendment of this claim on January 7, 2007 stated:

> (b) conducting at least one test on each plant extract, wherein said test is known to correlate with a medical condition of a living organism

It is apparent from the rejection of claim 12 under 35 USC 112, second paragraph, at the time of the non-final Office action, that the examiner could not ascertain the metes and bounds of the phrase 'conducting at least one pharmacological test known to correlate with a changed biological state of living organism on each plant' in claim 12, part (b). While applicant clarified this phrase in the amendment filed on January 7, 2007, the amendment plainly changed the scope of claim 12 and claims dependent thereupon thus necessitating the new rejections under 35 USC 102(e) and 102(b) :"[A]n examiner cannot be expected to foresee whether or how an applicant will amend a claim to overcome a rejection except in very limited circumstances (e.g., where the examiner suggests how applicant can overcome a rejection under 35 U.S.C. 112, second paragraph)" (see MPEP § 706.07(a)). In the instant case, the examiner did not specifically suggest the claim limitations as presented by applicant in the amendment filed on January 7, 2007 in claims 12-16 and thus, the new rejections made under 35 USC 102(e) and 102(b), as instituted by the examiner in the final Office action, are not deemed to have precluded the finality of the Office action filed on April 4, 2008.

With regard to the new rejection of claims 12-17, 19-20 and 23-26 under 35 USC 103(a) as being unpatentable over Schwartz (US 20040219508) in the final Office action, it is deemed that this

rejection was a new rejection instituted by the examiner which was necessitated by applicant's amendments for the reasons explained *infra*.

It has been previously established that the amendment to claim 12 and dependant claims thereof; i.e., claims 13, 14 and 15 changed the scope of these claims. Thus, the new rejection set forth under 35 USC 103(a) as being unpatentable over Schwartz (US 20040219508) in the final Office action was necessitated by applicant's amendments. It is determined that the inclusion of claims 17, 19-20 and 23-26 in this new rejection instituted by the examiner was also necessitated by applicant's amendments.

Claim 17 as presented in the amendment filed January 7, 2007 recited:

> 17. (CURRENTLY AMENDED) A method of reproducibly obtaining a pharmacologically active mixture of chemical components, having a ~~reproducibly reliable~~ desired level of pharmacological activity, derived from a plant source comprising:
> (a) conducting a plurality of different extraction processes on a plurality of samples from the same plant source to ~~produce~~ obtain a plurality of plant extracts;
> (b) conducting at least two in vitro and at least two in vivo ~~pharmacological~~ tests, known to correlate with effective treatment of a medical condition in a patient, with each plant extract;
> (c) selecting the plant extract displaying the highest pharmacological activity in step (b);
> or
> (d) optionally, combining or concentrating the extract from step (a), step (b) and/or step (c) to a specific level for standardization obtain the desired level of pharmacological activity.

Claims 19, 20 and 23-26 were amended on January 7, 2007 to be dependant upon claim 17, wherein claims 19-26 had previously been dependant upon claim 12. It is noted here that in applicant's amendment submitted on January 7, 2007, the claim amendments to claims 19, 20 and 23-25 incorrectly struck-through the phrase 'claim 18' and replaced this phrase with 'claim 17' although it is clear from the previous claim-set of June 14, 2007 that these claims were dependant upon claim 12 and not claim 18 as represented by the claim amendments of January 7, 2007. Thus, the amendments to claims 19, 20 and 23-25 did not follow correct amendment procedure.

The changes to claim 17, steps (a) and (b) in the amendment submitted by applicant on January 7, 2007 included replacing the term 'produce' with 'obtain' in part (a) and deletion of the term 'pharmacological' in part (b). The amendment after part (c) to include the term 'or' broadens the claim because considering that one could carry out the method step of (c) or (d) and considering that step (d) is optional, the only steps specifically required by the newly amended method of claim 17 are steps (a) and (b). Hence, it is deemed that the new rejection made over claim 17 and claims dependent thereupon did not preclude rendering the Office action of April 4, 2008 final due to the broadening of claim 17, as well as applicant's amendments which changed the dependencies of claims 19, 20 and 23-25 from claim 12 to claim 17.

The examiner introduced new rejections under 35 USC 112, second paragraph, in the final Office action. The first rejection rendered under this statute in the final Office action stated as

follows: "Claim 12 step b is rendered vague and indefinite because of the phrase 'conducting at least one test on each plant extract...' ". It is evident that this rejection was based upon applicant's newly inserted phrase "conducting at least one test on each plant extract..." into claim 12 upon submission of the amendment on January 7, 2007 and was thus necessitated by applicant's amendment.

The second new rejection rendered under this statute in the final Office action stated as follows:

> Claim 17 is rendered vague and indefinite because of the phrase "conducting at least two in vitro and at least two in vivo tests." The above phrase is unclear to Examiner because Examiner cannot determine of what active ingredient Applicant is performing and/or conducting the in vitro and the in vivo on? Is Applicant performing and/or conducting the in vitro and the in vivo test on a chemical compound?

It is apparent that claim 17, prior to the amendment of January 7, 2007 contained the phrase 'conducting at least two in vitro and at least two in vivo pharmacological tests":

> Claim 17...(b) conducting at least two in vitro and at least two in vivo pharmacological tests, known to correlate with effective treatment of a medical condition in a patient, with each plant extract....

Although the amendment submitted by applicant on January 7, 2007 deleted the word 'pharmacological' from part (b) of claim 17, the rejection newly recited by the examiner focuses on the phrase "conducting at least two in vitro and at least two in vivo tests." The examiner specifically stated '...Examiner cannot determine of what active ingredient Applicant is performing and/or conducting the in vitro and the in vivo on.' The deletion of the term 'pharmacological' from claim 17 by applicant is deemed to be immaterial to the examiner's new rejection over claim 17 because the deletion of the term 'pharmacological' broadens the type of test conducted, but does not materially change the substance which is being tested. Because the gist of this phrase was present in claim 17 prior to the amendment of January 7, 2007, it is deemed that the examiner could have and should have set forth this rejection in the non-final Office action but failed to do so. This new rejection made over claim 17 under 35 USC 112, second paragraph, was not necessitated by applicant's amendments to the claims, and hence precluded the finality of the Office action mailed by the examiner on April 4, 2008.

Applicants' arguments are found persuasive that the final Office action issued April 4, 2008 was premature and, therefore, finality of the Office action will be withdrawn.

Applicant's request for an interview in this petition should be directed toward the examiner of record. Applicant's request states:

> In addition, applicant's attorney would appreciate the opportunity that such an interview would provide to discuss the issues raised in the latest office action. The time constrains of after final practice do not permit the coordination of such a meeting.

Considering the finality of the previous Office action will be withdrawn, the request for an interview, if timely, will precede a final rejection as pointed out as a concern of applicant's. However, in the event that applicant wishes to conduct an interview after a final rejection in this case, interviews after final are not prohibited as applicant tends to convey, but rather are permitted under certain circumstances (see MPEP § 7.13.09).

DECISION

The petition is **GRANTED.**

This application will be forwarded to the examiner for an action not inconsistent with this decision.

Should there be any questions about this decision please contact Marianne C. Seidel, by letter addressed to Director, TC 1600, at the address listed above, or by telephone at 571-272-0584 or by facsimile sent to the general Office facsimile number, 703-872-9306.

George C. Elliott

George Elliott
Director, Technology Center 1600

UNITED STATES PATENT AND TRADEMARK OFFICE

Commissioner for Patents
United States Patent and Trademark Office
P.O. Box 1450
Alexandria, VA 22313-1450
www.uspto.gov

JJGJr: 06-06

Paper No: __

MILA KASAN, PATENT DEPT.
APPLIED BIOSYSTEMS
850 LINCOLN CENTRE DRIVE
FOSTER CITY CA 94404

COPY MAILED
JUL 1 0 2006
OFFICE OF PETITIONS

In re Application of	:	
Chen	:	
Application No. 11/070,894	:	DECISION
Filed: 1 March, 2005	:	
Attorney Docket No.: 5071US	:	

This is a decision on the petition under 37 C.F.R. §1.10, filed on 19 August, 2005, and seeking for the above-identified application a filing date of 1 March, 2005, rather than the presently accorded filing date of 3 March, 2005.

The Office regrets the delay in addressing this matter, however, it is noted that: this matter was received by the Attorneys in the Office of Petitions only at this writing;

NOTES:

Petitioner is reminded that an inquiry to the US Postal Service (USPS) Track & Confirm website (http://www.usps.com/shipping/trackandconfirm.htm) and the printing out of results of inquiries made there within three days of the expected delivery date may provide a "paper trail" such as could be required and offered in the instant matter.

An underlying requirement for relief under the regulation is that "[t]he petition is filed promptly after the person becomes aware that the Office has accorded, or will accord, a filing date other than the USPS deposit date[.]" Nonetheless, Petitioner appears to have ignored the matter for five (5) months after the Notice to Comply was mailed and more than two months after replying to that Notice.

Moreover, there is no indication that Petitioner has sought to file with the Office a Status Inquiry since the filing of the instant petition, and Petitioner is reminded that the filing of such inquiries at a minimum of three- (3-) month intervals may provide a showing of

diligence should the extended delay be questioned (for example, as required under 37 C.F.R. §1.181).

The petition is **GRANTED**.

BACKGROUND AND ANALYSIS

The controlling regulations are set forth at under 37 C.F.R. §1.10.[1]

---

[1] The regulations at 37 C.F.R. §1.10 provide:

§ 1.10 Filing of papers and fees by "Express Mail."

(a) Any correspondence received by the Patent and Trademark Office (Office) that was delivered by the "Express Mail Post Office to Addressee" service of the United States Postal Service (USPS) will be considered filed in the Office on the date of deposit with the USPS. The date of deposit with the USPS is shown by the "date-in" on the "Express Mail" mailing label or other official USPS notation. If the USPS deposit date cannot be determined, the correspondence will be accorded the Office receipt date as the filing date. See § 1.6(a).

(b) Correspondence should be deposited directly with an employee of the USPS to ensure that the person depositing the correspondence receives a legible copy of the "Express Mail" mailing label with the "date-in" clearly marked. Persons dealing indirectly with the employees of the USPS (such as by deposit in an "Express Mail" drop box) do so at the risk of not receiving a copy of the "Express Mail" mailing label with the desired "date-in" clearly marked. The paper(s) or fee(s) that constitute the correspondence should also include the "Express Mail" mailing label number thereon. See paragraphs (c), (d) and (e) of this section.

(c) Any person filing correspondence under this section that was received by the Office and delivered by the "Express Mail Post Office to Addressee" service of the USPS, who can show that there is a discrepancy between the filing date accorded by the Office to the correspondence and the date of deposit as shown by the "date-in" on the "Express Mail" mailing label or other official USPS notation, may petition the Commissioner to accord the correspondence a filing date as of the "date-in" on the "Express Mail" mailing label or other official USPS notation, provided that:

(1) The petition is filed promptly after the person becomes aware that the Office has accorded, or will accord, a filing date other than the USPS deposit date;

(2) The number of the "Express Mail" mailing label was placed on the paper(s) or fee(s) that constitute the correspondence prior to the original mailing by "Express Mail;" and

(3) The petition includes a true copy of the "Express Mail" mailing label showing the "date-in," and of any other official notation by the USPS relied upon to show the date of deposit.

(d) Any person filing correspondence under this section that was received by the Office and delivered by the "Express Mail Post Office to Addressee" service of the USPS, who can show that the "date-in" on the "Express Mail" mailing label or other official notation entered by the USPS was incorrectly entered or omitted by the USPS, may petition the Commissioner to accord the correspondence a filing date as of the date the correspondence is shown to have been deposited with the USPS, provided that:

(1) The petition is filed promptly after the person becomes aware that the Office has accorded, or will accord, a filing date based upon an incorrect entry by the USPS;

(2) The number of the "Express Mail" mailing label was placed on the paper(s) or fee(s) that constitute the correspondence prior to the original mailing by "Express Mail"; and

(3) The petition includes a showing which establishes, to the satisfaction of the Commissioner, that the requested filing date was the date the correspondence was deposited in the "Express Mail Post Office toAddressee" service prior to the last scheduled pickup for that day. Any showing pursuant to this paragraph must be corroborated by evidence from the USPS or that came into being after deposit and within one business day of the deposit of the correspondence in the "Express Mail Post Office to Addressee" service of the USPS.

(e) Any person mailing correspondence addressed as set out in § 1.1(a) to the Office with sufficient postage utilizing the "Express Mail Post Office to Addressee" service of the USPS but not received by the Office, may petition the Commissioner to consider such correspondence filed in the Office on the USPS deposit date, provided that:

(1) The petition is filed promptly after the person becomes aware that the Office has no evidence of receipt of the correspondence;

(2) The number of the "Express Mail" mailing label was placed on the paper(s) or fee(s) that constitute the correspondence prior to the original mailing by "Express Mail";

(3) The petition includes a copy of the originally deposited paper(s) or fee(s) that constitute the correspondence showing the number of the "Express Mail" mailing label thereon, a copy of any returned postcard receipt, a copy of the "Express Mail" mailing label showing the "date-in," a copy of any other official notation by the USPS relied upon to show the date of deposit, and, if the requested filing date is a date other than the "date-in" on the "Express Mail" mailing label or other official notation entered by the USPS, a showing pursuant to paragraph (d)(3) of this section that the requested filing date was the date the correspondence was deposited in the "Express Mail Post Office to Addressee" service prior

The record reflects that:

- the instant application, averred to have been transmitted the package bearing US Postal Service (USPS) Express Mail Label No. EV320409588US, was received by the Office and given a filing date of 3 March, 2005;

- with the instant petition Petitioner provided, *inter alia*, (a) what is averred to be a true copy of the USPS Express Mail Label No. EV320409588US, with the hand-written "date in" of "3 [-]1 [-] 05," but also indicating that delivery was not to take place until "3/3[05]," and (b) Petitioner avers that he deposited the package in question with the USPS on 1 March, 2005, and the transmittal for the instant application bears the USPS Express Mail Label No. EV320409588US;

- while further, a request by the Office to the USPS Track & Confirm website referenced above provides the following information: "Acceptance SAN MATEO CA 94404 03/01/05 4:47pm" for the package transmitted bearing the USPS Express Mail Label No. V320409588US.

Accordingly, the petition hereby is **granted**; the petition fee is waived.

The instant file is released to OIPE to correct the filing date so as to accord to the instant application a filing date of 1 March, 2005, and to mail to Petitioner a corrected filing receipt reflecting a filing date of 1 March, 2005.

Telephone inquiries concerning this decision may be directed to the undersigned at (571) 272-3214.

John J. Gillon, Jr.
Senior Attorney
Office of Petitions

---

to the last scheduled pickup for that day; and

(4) The petition includes a statement which establishes, to the satisfaction of the Commissioner, the original deposit of the correspondence and that the copies of the correspondence, the copy of the "Express Mail" mailing label, the copy of any returned postcard receipt, and any official notation entered by the USPS are true copies of the originally mailed correspondence, original "Express Mail" mailing label, returned postcard receipt, and official notation entered by the USPS.

(f) The Office may require additional evidence to determine if the correspondence was deposited as "Express Mail" with the USPS on the date in question.

[48 Fed. Reg. 2708, Jan. 20, 1983, added effective Feb. 27, 1983; 48 Fed. Reg. 4285, Jan. 31, 1983, paras. (a) & (c), 49 Fed. Reg. 552, Jan. 4, 1984, effective Apr. 1, 1984; paras. (a)-(c) revised and paras. (d) - (f) added, 61 Fed. Reg. 56439, Nov. 1, 1996, effective Dec. 2, 1996; paras. (d) & (e) revised, 62 Fed. Reg. 53131, Oct. 10, 1997, effective Dec. 1, 1997]

UNITED STATES PATENT AND TRADEMARK OFFICE

UNITED STATES DEPARTMENT OF COMMERCE
United States Patent and Trademark Office
Address: COMMISSIONER FOR PATENTS
P.O. Box 1450
Alexandria, Virginia 22313-1450
www.uspto.gov

M.H.K.K.G., P.C. / ADOBE SYSTEMS INCORPORATED
P.O. BOX 398
AUSTIN, TX 78767-0398

Mail Date: 04/20/2010

Applicant	: Alexander Mohr	: DECISION ON REQUEST FOR
Patent Number	: 7644286	: RECALCULATION of PATENT
Issue Date	: 01/05/2010	: TERM ADJUSTMENT IN VIEW
Appliction No	: 11/070,907	: OF WYETH AND NOTICE OF INTENT TO
Filed	: 03/03/2005	: ISSUE CERTIFICATE OF CORRECTION
		:

The Request for Recalculation is **GRANTED** to the extent indicated.

The patent term adjustment has been determined to be **1343** days. The USPTO will *sua sponte* issue a certificate of correction reflecting the amount of PTA days determined by the recalculation.

Prior to the issuance of the certificate of correction, the USPTO will afford patentee an opportunity to be heard and request reconsideration. Accordingly, patentee has **one month or thirty (30) days**, whichever is longer, to file a request for reconsideration of this patent term adjustment calculation. See 35 U.S.C. 154(b)(3)(B)(ii) and 37 CFR 1.322(a)(4). No extensions of time will be granted under 37 CFR 1.136.

Patentee should use document code PET.OP if electronically filing a request for reconsideration of this patent term adjustment calculation. The patentee must also include the information required by 37 CFR 1.705(b)(2) and the fee required by 37 CFR 1.18(e). If patentee does not file a timely request for reconsideration of this patent term adjustment calculation including the information required by 37 CFR 1.705(b)(2) and the fee required by 37 CFR 1.18(e), the USPTO will issue a certificate of correction reflecting the PTA determination noted above.

Patentee should be aware that in order to preserve the right to review in the United States District Court for the District of Columbia of the USPTO patent term adjustment determination, patentee must ensure that he or she also take the steps required under 35 U.S.C. 154(b)(4)(A) in a timely manner. Nothing in the request for recalculation should be construed as providing an alternative time frame for commencing a civil action under 35 U.S.C. 154(b)(4)(A).

Any questions concerning this decision should be directed to the Office of Patent Legal Administration at 571-272-7702.

UNITED STATES PATENT AND TRADEMARK OFFICE

UNITED STATES DEPARTMENT OF COMMERCE
United States Patent and Trademark Office
Address: COMMISSIONER FOR PATENTS
P.O. Box 1450
Alexandria, Virginia 22313-1450
www.uspto.gov

Byrne Poh LLP
11 Broadway, Ste 865
New York, NY 10004

Mail Date: 04/21/2010

Applicant	: Andrea G. Forte	: DECISION ON REQUEST FOR
Patent Number	: 7636336	: RECALCULATION of PATENT
Issue Date	: 12/22/2009	: TERM ADJUSTMENT IN VIEW
Appliction No	: 11/070,936	: OF WYETH AND NOTICE OF INTENT TO
Filed	: 03/03/2005	: ISSUE CERTIFICATE OF CORRECTION
		:

The Request for Recalculation is **GRANTED** to the extent indicated.

The patent term adjustment has been determined to be **887** days. The USPTO will *sua sponte* issue a certificate of correction reflecting the amount of PTA days determined by the recalculation.

Prior to the issuance of the certificate of correction, the USPTO will afford patentee an opportunity to be heard and request reconsideration. Accordingly, patentee has **one month or thirty (30) days**, whichever is longer, to file a request for reconsideration of this patent term adjustment calculation. See 35 U.S.C. 154(b)(3)(B)(ii) and 37 CFR 1.322(a)(4). No extensions of time will be granted under 37 CFR 1.136.

Patentee should use document code PET.OP if electronically filing a request for reconsideration of this patent term adjustment calculation. The patentee must also include the information required by 37 CFR 1.705(b)(2) and the fee required by 37 CFR 1.18(e). If patentee does not file a timely request for reconsideration of this patent term adjustment calculation including the information required by 37 CFR 1.705(b)(2) and the fee required by 37 CFR 1.18(e), the USPTO will issue a certificate of correction reflecting the PTA determination noted above.

Patentee should be aware that in order to preserve the right to review in the United States District Court for the District of Columbia of the USPTO patent term adjustment determination, patentee must ensure that he or she also take the steps required under 35 U.S.C. 154(b)(4)(A) in a timely manner. Nothing in the request for recalculation should be construed as providing an alternative time frame for commencing a civil action under 35 U.S.C. 154(b)(4)(A).

Any questions concerning this decision should be directed to the Office of Patent Legal Administration at 571-272-7702.

UNITED STATES PATENT AND TRADEMARK OFFICE

COMMISSIONER FOR PATENTS
UNITED STATES PATENT AND TRADEMARK OFFICE
P.O. BOX 1450
ALEXANDRIA, VA 22313-1450
www.uspto.gov

FELLERS, SNIDER, BLANKENSHIP, BAILEY & TIPPENS, P.C.
100 NORTH BROADWAY
SUITE 1700
OKLAHOMA CITY, OK 73102-8820

MAILED
DEC 30 2005
TECHNOLOGY CENTER 2100

In re Application of: GITTINS et al.
Application No. 11/070,942
Filed: March 3, 2005
For: FAILURE TREND DETECTION AND CORRECTION IN A DATA STORAGE ARRAY

DECISION ON PETITION
TO MAKE SPECIAL
(ACCELERATED EXAMINATION)
UNDER M.P.E.P. §708.02 (VIII)

This is a response to the petition filed 28 October 2005 under 37 C.F.R. §1.102(d) and M.P.E.P. §708.02 (VIII): Accelerated Examination, to make the above-identified application special.

The Petition is **DISMISSED**.

M.P.E.P. §708.02, Section VIII which sets out the prerequisites for a grantable petition for Accelerated Examination under 37 C.F.R. §1.102(d) states in relevant part:

A new application (one which has not received any examination by the examiner) may be granted special status provided that applicant (and this term includes applicant's attorney or agent) complies with each of the following items:

(a) Submits a petition to make special accompanied by the fee set forth in **37 CFR 1.17(h)**;

(b) Presents all claims directed to a single invention, or if the Office determines that all the claims presented are not obviously directed to a single invention, will make an election without traverse as a prerequisite to the grant of special status;

(c) Submits a statement(s) that a pre-examination search was made, listing the field of search by class and subclass, publication, Chemical Abstracts, foreign patents, etc. The pre-examination search must be directed to the invention as claimed in the application for which special status is requested. A search made by a foreign patent office satisfies this requirement;

(d) Submits one copy each of the references deemed most closely related to the subject matter encompassed by the claims if said references are not already of record; and

(e) Submits a detailed discussion of the references, which discussion points out, with the particularity required by 37 CFR 1.111 (b) and (c), how the claimed subject matter is patentable over the references.

In those instances where the request for this special status does not meet all the prerequisites set forth above, **applicant will be notified and the defects in the request will be stated**. The application will remain in the status of a new application awaiting action in its regular turn. In those instances where a request is defective in one or more respects, applicant will be given one opportunity to perfect the request in a renewed petition to make special. If perfected, the request will then be granted. If not perfected in the first renewed petition, any additional renewed petitions to make special may or may not be considered at the discretion of the Technology Center (TC) Special Program Examiner.

The petition filed 28 October 2005 fails to adequately meet requirement (e) of the criteria set forth above. The discussion of the references deemed most closely related is not sufficiently detailed. The description of each reference is only a few sentences long and gives only a cursory description. The description also fails to point to specific sections of the reference, e.g., column and line numbers or paragraph numbers. Additionally, the discussion of the references does not point out with the particularity required by 37 CFR 1.111(b) and (c) how the claimed subject matter is patentable over the references. It is not clear from the discussion how the claims are intended to distinguish from the references. It is first stated that none of the references teach "accumulat[ing] operational performance data from each of the plurality of data storage devices." Then, in the description of each reference it is stated that none of the references teach "*predictive failure analysis* involving accumulating operational performance data from each of a plurality of data storage devices in a multi-device array storage space" (emphasis added). It is not clear which of these statements is intended to distinguish the independent claims from the references. It is also noted that if it is the second statement that is intended to distinguish the claims, the limitation of "*predictive* failure analysis" does not appear to be required by the independent claims.

Petition to Make Special **DISMISSED**.

Petitioner is given one opportunity to perfect the petition. Any request for reconsideration must be filed within TWO MONTHS of the mail date of this decision.

Until the renewed petition is submitted, the application will be returned to the examiner's docket to await treatment on the merits in the normal order of examination.

Pinchus M. Laufer

Pinchus M. Laufer
Special Program Examiner
Technology Center 2100
Computer Architecture, Software and Information Security
571-272-3599

ds

UNITED STATES PATENT AND TRADEMARK OFFICE

Commissioner for Patents
United States Patent and Trademark Office
P.O. Box 1450
Alexandria, VA 22313-1450
www.uspto.gov

Fellers, Snider, Blankenship, Bailey & Tippens, P. C.
100 North Broadway
Suite 1700
Oklahoma City, OK 73102-8820

MAILED

SEP 29 2006

Technology Center 2100

In re Application of: GITTINS,, et al.
Application No. 11/070,942
Filed: 3 March 2005
For: FAILURE TREND DETECTION AND CORRECTION IN A DATA STORAGE ARRAY

DECISION ON PETITION TO MAKE SPECIAL (ACCELERATED EXAMINATION) UNDER M.P.E.P. §708.02 (VIII)

This is a decision on the renewed petition filed 28 February 2006, under 37 C.F.R. § 102(d) and M.P.E.P. § 708.02(VIII): Accelerated Examination for the identified Application.

The Petition is **GRANTED**.

M.P.E.P. § 708.02, Section VIII which sets out the prerequisites for a grantable petition for Accelerated Examination under 37 C.F.R. § 102(d) states in relevant part:

A new application (one which has not received any examination by the examiner) may be granted special status provided that applicant (and this term includes applicant's attorney or agent) complies with each of the following items:

(a) Submits a petition to make special accompanied by the fee set forth in 37 CFR 1.17(h);

(b) Presents all claims directed to a single invention, or if the Office determines that all the claims presented are not obviously directed to a single invention, will make an election without traverse as a prerequisite to the grant of special status;

(c) Submits a statement(s) that a pre-examination search was made, listing the field of search by class and subclass, publication, Chemical Abstracts, foreign patents, etc. The pre-examination search must be directed to the invention as claimed in the application for which special status is requested. A search made by a foreign patent office satisfies this requirement;

(d) Submits one copy each of the references deemed most closely related to the subject matter encompassed by the claims if said references are not already of record; and

(e) Submits a detailed discussion of the references, which discussion points out, with the particularity required by 37 CFR 1.111 (b) and (c), how the claimed subject matter is patentable over the references.

Petition to Make Special **GRANTED** since all of the requirements for special status under MPEP § 708.02(VIII) have been met.

The application is being forwarded to the Examiner for accelerated examination in accordance with M.P.E.P. §708.02, Section VIII. If the application is subsequently allowed, it will be given priority for printing. See M.P.E.P. §1309.

Brian L. Johnson
Special Programs Examiner
Technology Center 2100
Computer Architecture, Software and Information Security
571-272-3595

GO

SPE RESPONSE FOR CERTIFICATE OF CORRECTION

Paper No.:20071119

DATE : November 19, 2007

TO SPE OF : ART UNIT 3663

SUBJECT : Request for Certificate of Correction on Patent No.: 7239578

A response is requested with respect to the accompanying request for a certificate of correction.

Please complete this form and return with file, within **7** days to:
Certificates of Correction Branch - PK 3-910
Palm location **7590** - Tel. No. 305-8201

With respect to the change(s) requested, correcting Office and/or Applicant's errors, should the patent read as shown in the certificate of correction? No new matter should be introduced, nor should the scope or meaning of the claims be changed.

Thank You For Your Assistance **Certificates of Correction Branch**

The request for issuing the above-identified correction(s) is hereby:
Note your decision on the appropriate box.

☒ **Approved** **All** changes apply.

☐ **Approved in Part** Specify below which changes **do not** apply.

☐ **Denied** State the reasons for denial below.

Comments:

JACK KEITH
SUPERVISORY PATENT EXAMINER

SPE: Jack Keith **Art Unit** 3663

UNITED STATES PATENT AND TRADEMARK OFFICE

Commissioner for Patents
United States Patent and Trademark Office
P.O. Box 1450
Alexandria, VA 22313-1450
www.uspto.gov

MORRISON & FOERSTER, LLP
555 WEST FIFTH STREET
SUITE 3500
LOS ANGELES CA 90013-1024

COPY MAILED
JAN 12 2010

In re Application of	:	
Pramanick et al.	:	
Application No. 11/070,957	:	DECISION ON PETITION
Filed: March 2, 2005	:	
Attorney Docket No. 333772002200	:	

This is a decision on the petition under the unintentional provisions of 37 CFR 1.137(b), filed November 20, 2009, to revive the above-identified application.

The petition is **GRANTED**.

This application became abandoned for failure to reply in a timely manner to the final Office action mailed September 16, 2008. No extensions of time under the provisions of 37 CFR 1.136(a) were obtained. Accordingly, this application became abandoned on December 17, 2008. A Notice of Abandonment was mailed August 18, 2009.

The petition satisfies the requirements of 37 CFR 1.137(b) in that petitioner has supplied (1) the reply in the form of a Request for Continued Examination (RCE) and fee of $810.00 and the submission required by 37 CFR 1.114; (2) the petition fee of $1,620.00; and (3) a proper statement of unintentional delay.

Telephone inquiries concerning this decision should be directed to the undersigned at (571) 272-7751.

This matter is being referred to Technology Center 2191 for processing of the Request for Continued Examination under 37 CFR 1.114 and the Amendment filed with the instant petition.

Joan Olszewski

Joan Olszewski
Petitions Examiner
Office of Petitions

UNITED STATES PATENT AND TRADEMARK OFFICE

Commissioner for Patents
United States Patent and Trademark Office
P.O. Box 1450
Alexandria, VA 22313-1450
www.uspto.gov

Gilles R. G. Monif, MD
17121 Lakewood Drive
Bellevue, NE 68123-3954

COPY MAILED

APR 0 2 2007

OFFICE OF PETITIONS

In re Application of
Gilles R. G. Monif
Application No.: 11/070,983
Filed: March 3, 2005
Attorney Docket No: 7365-01A1

ON PETITION

This is in response to the petition under 37 CFR 1.137(b) filed January 16, 2007.

Any request for reconsideration of this decision must be submitted within TWO (2) MONTHS from the mail date of this decision. Extensions of time under 37 CFR 1.136(a) are permitted. The reconsideration request should include a cover letter entitled "Renewed Petition" under 37 CFR 1.137(b)."

This application became abandoned for failure to respond in a proper reply to the final Office action mailed June 5, 2006. The notice set a shortened statutory period for reply of three-months from its mailing date. A proper reply was not receivd within the allowable period. The application became abandoned on September 6, 2006. A Notice of Abandonment was mailed on December 19, 2006.

Effective December 1, 1997, the provisions of 37 CFR 1.137(b) now provide that where the delay in reply was unintentional, a petition may be filed to revive an abandoned application or a lapsed patent pursuant to 37 CFR 1.137(b). A grantable petition pursuant to 37 CFR 1.137(b) must be accompanied by:

(1) the required reply, unless previously filed. In a non-provisional application abandoned for failure to prosecute, the required reply may be met by the filing of a continuing application. In an application or patent, abandoned or lapsed for failure to pay the issue fee, or any portion thereof, the required reply must be the payment of the issue fee or any outstanding balance thereof.

(2) the petition fee as set forth in 37 CFR 1.17(m);

(3) a statement that the entire delay in filing the required reply from the due date for the reply until the filing of a grantable petition pursuant to 37 CFR 1.137(b) was unintentional. The Commissioner may require additional information where there is a question whether the delay was unintentional; and

(4) any terminal disclaimer (and fee set forth in 37 CFR 1.20(d)) required pursuant to 37 CFR 1.137(c).

The instant petition does not satisfy the requirements of item (1) above.

The petition was not accompanied by a proper response to the final Office action of June 5, 2006. A proper response to the final Office action would include an amendment that places the application in condition for allowance or Request for Continued Examination along with the requisite fee.

Further correspondence with respect to this matter should be addressed as follows:

By mail:

Mail Stop Petitions
Commissioner for Patents
United States Patent and Trademark Office
Box 1450
Alexandria, VA 22313-1450

By facsimile: (571) 273-8300
Attn: Office of Petitions

Questions regarding the amendment to be filed with the renewed petition must be addressed to Examiner Swartz. Telephone inquiries concerning this decision may be directed to the undersigned at (571) 272-3222.

Kenya A. McLaughlin
Petitions Attorney
Office of Petitions

UNITED STATES PATENT AND TRADEMARK OFFICE

Commissioner for Patents
United States Patent and Trademark Office
P.O. Box 1450
Alexandria, VA 22313-1450
www.uspto.gov

COPY MAILED
NOV 09 2007
OFFICE OF PETITIONS

Gilles R. G. Monif, MD
17121 Lakewood Drive
Bellevue NE 68123-3954

In re Application of	:	
Gilles R. G. Monif	:	
Application No.: 11/070,983	:	ON PETITION
Filed: March 3, 2005	:	
Attorney Docket No: 7365-01A1	:	

This is in response to the renewed petition under 37 CFR 1.137(b) filed April 12, 2007.

Any request for reconsideration of this decision must be submitted within TWO (2) MONTHS from the mail date of this decision. Extensions of time under 37 CFR 1.136(a) are permitted. The reconsideration request should include a cover letter entitled "Renewed Petition" under 37 CFR 1.137(b)."

This application became abandoned for failure to respond in a timely manner to the final Office action mailed June 5, 2006. The notice set a shortened statutory period for reply of three-months from its mailing date. Extensions of time were available pursuant to 37 CFR 1.136(a). A response was not received within the allowable period and the application became abandoned on September 6, 2006. A Notice of Abandonment was mailed on December 19, 2006.

Effective December 1, 1997, the provisions of 37 CFR 1.137(b) now provide that where the delay in reply was unintentional, a petition may be filed to revive an abandoned application or a lapsed patent pursuant to 37 CFR 1.137(b). A grantable petition pursuant to 37 CFR 1.137(b) must be accompanied by:

(1) the required reply, unless previously filed. In a non-provisional application abandoned for failure to prosecute, the required reply may be met by the filing of a continuing application. In an application or patent, abandoned or lapsed for failure to pay the issue fee, or any portion thereof, the required reply must be the payment of the issue fee or any outstanding balance thereof.

(2) the petition fee as set forth in 37 CFR 1.17(m);

(3) a statement that the entire delay in filing the required reply from the due date for the reply until the filing of a grantable petition pursuant to 37 CFR 1.137(b) was unintentional. The Commissioner may require additional information where there is a question whether the delay was unintentional; and

(4) any terminal disclaimer (and fee set forth in 37 CFR 1.20(d)) required pursuant to 37 CFR 1.137(c).

The instant petition does not satisfy the requirements of item (1) above.

As to item (1) above, Examiner Rod Swartz has determined that the amendment filed June 18, 2007, does not place the application in condition for allowance. Examiner Swartz has indicted that the amendment is improper because there is a deletion of some matter without the required formatting, the insertion of other matter without the required formatting, and misspellings within the the new claims. The petition must be dismissed because of the lack of a proper response to the final Office action. The renewed petition must accompanied by a proper response to the final Office action, which may include an amendment that places the application in condition for allowance or Request for Continued Examination under 37 CFR 1.114. Questions regarding the determination of the sufficiency of the reply filed June 18, 2007, should be directed to Examiner Swartz.

Further correspondence with respect to this matter should be addressed as follows:

By mail:

Mail Stop Petitions
Commissioner for Patents
United States Patent and Trademark Office
Box 1450
Alexandria, VA 22313-1450

By facsimile: (571) 273-8300
Attn: Office of Petitions

Telephone inquiries concerning this decision may be directed to the undersigned at (571) 272-3222.

Kenya A. McLaughlin
Petitions Attorney
Office of Petitions

UNITED STATES PATENT AND TRADEMARK OFFICE

Commissioner for Patents
United States Patent and Trademark Office
P.O. Box 1450
Alexandria, VA 22313-1450
www.uspto.gov

COPY MAILED

JUN 0 5 2009

OFFICE OF PETITIONS

MacCord, Mason, PLLC
300 N. Greene Street, Suite 1600
P.O. Box 2974
Greensboro, NC 27402

In re Application of	:	
Giles R. G. Monif	:	
Application No. 11/070,983	:	DECISION ON PETITION
Filed: March 3, 2005	:	TO WITHDRAW
Attorney Docket No. 7365-01A	:	FROM RECORD
	:	

This is a decision on the Request to Withdraw as attorney or agent of record under 37 C.F.R. § 1.36(b), filed July 17, 2006.

The request is **moot because a revocation of power of attorney has been filed**.

A review of the file record indicates that the power of attorney to Howard A. MacCord, Jr. and all attorneys/agents of record has been revoked by the applicant of the patent application on July 13, 2006. Accordingly, the request to withdraw under 37 C.F.R. § 1.36(b) is moot.

All future communications from the Office will continue to be directed to the below-listed address until otherwise notified by applicant.

Telephone inquires concerning this decision should be directed to Kimberly Inabinet at 571-272-4618.

Kimberly Inabinet
Petitions Examiner
Office of Petitions

cc: Gilles R. G. Monif, MD
17121 Lakewood Drive
Bellevue NE 68123-3954

UNITED STATES PATENT AND TRADEMARK OFFICE

UNITED STATES DEPARTMENT OF COMMERCE
United States Patent and Trademark Office
Address: COMMISSIONER FOR PATENTS
P.O. Box 1450
Alexandria, Virginia 22313-1450
www.uspto.gov

INTEL/BSTZ
BLAKELY SOKOLOFF TAYLOR & ZAFMAN LLP
1279 OAKMEAD PARKWAY
SUNNYVALE, CA 94085-4040

Mail Date: 04/21/2010

Applicant	: Natalie D. Enright	: DECISION ON REQUEST FOR
Patent Number	: 7587584	: RECALCULATION of PATENT
Issue Date	: 09/08/2009	: TERM ADJUSTMENT IN VIEW
Appliction No	: 11/070,991	: OF WYETH AND NOTICE OF INTENT TO
Filed	: 03/02/2005	: ISSUE CERTIFICATE OF CORRECTION
		:

The Request for Recalculation is **GRANTED** to the extent indicated.

The patent term adjustment has been determined to be **143** days. The USPTO will *sua sponte* issue a certificate of correction reflecting the amount of PTA days determined by the recalculation.

Prior to the issuance of the certificate of correction, the USPTO will afford patentee an opportunity to be heard and request reconsideration. Accordingly, patentee has **one month or thirty (30) days**, whichever is longer, to file a request for reconsideration of this patent term adjustment calculation. See 35 U.S.C. 154(b)(3)(B)(ii) and 37 CFR 1.322(a)(4). No extensions of time will be granted under 37 CFR 1.136.

Patentee should use document code PET.OP if electronically filing a request for reconsideration of this patent term adjustment calculation. The patentee must also include the information required by 37 CFR 1.705(b)(2) and the fee required by 37 CFR 1.18(e). If patentee does not file a timely request for reconsideration of this patent term adjustment calculation including the information required by 37 CFR 1.705(b)(2) and the fee required by 37 CFR 1.18(e), the USPTO will issue a certificate of correction reflecting the PTA determination noted above.

Patentee should be aware that in order to preserve the right to review in the United States District Court for the District of Columbia of the USPTO patent term adjustment determination, patentee must ensure that he or she also take the steps required under 35 U.S.C. 154(b)(4)(A) in a timely manner. Nothing in the request for recalculation should be construed as providing an alternative time frame for commencing a civil action under 35 U.S.C. 154(b)(4)(A).

Any questions concerning this decision should be directed to the Office of Patent Legal Administration at 571-272-7702.

UNITED STATES PATENT AND TRADEMARK OFFICE

Commissioner for Patents
United States Patent and Trademark Office
P.O. Box 1450
Alexandria, VA 22313-1450
www.uspto.gov

ARNOLD S. WEINTRAUB
THE WEINTRAUB GROUP
32000 NORTHWESTERN HIGHWAY
SUITE 240
FARMINGTON HILLS, MI 48334

COPY MAILED

SEP 28 2007

OFFICE OF PETITIONS

In re Application of	:	
Lance L. Renfrow	:	
Application No. 11/070,997	:	DECISION ON PETITION
Filed: March 3, 2005	:	TO WITHDRAW
Attorney Docket No. HCR-102-A-2	:	FROM RECORD
	:	

This is a decision on the Request to Withdraw as attorney or agent of record under 37 C.F.R § 1.36(b), filed August 31, 2007.

The request is **APPROVED**.

A grantable request to withdraw as attorney/agent of record must be signed by every attorney/agent seeking to withdraw or contain a clear indication that one attorney is signing on behalf of another/others. A request to withdraw will not be approved unless at least 30 (thirty) days would remain between the date of approval and the later of the expiration date of a time to file a response or the expiration date of the maximum time period which can be extended under 37 C.F.R. § 1.136(a).

The request was signed by Arnold S. Weintraub on behalf of all attorneys with the firm of The Weintraub Group. All attorneys have been withdrawn.

Applicant is advised that there is no attorney of record.

A change of address was filed on September 7, 2007. Accordingly the correspondence address of record has been changed and the new correspondence address is indicated below. If applicant would like to appoint counsel to represent him then the proper power of attorney documents must be submitted.

Telephone inquiries concerning this decision should be directed to Kimberly Inabinet at 571-272-4618.

Kimberly Inabinet

Kimberly Inabinet
Petitions Examiner
Office of Petitions

cc: Russo & Duckworth, LLP
9090 Irvine Center Drive, Second Floor
Irvine, CA 92618

cc: Lance L. Renfrow
47 N. Ski Court
Gilbert, AZ 85233

UNITED STATES PATENT AND TRADEMARK OFFICE

UNITED STATES DEPARTMENT OF COMMERCE
United States Patent and Trademark Office
Address: COMMISSIONER FOR PATENTS
P.O. Box 1450
Alexandria, Virginia 22313-1450
www.uspto.gov

APPLICATION NUMBER	FILING OR 371 (c) DATE	FIRST NAMED APPLICANT	ATTY. DOCKET NO./TITLE
11/070,997	03/03/2005	Lance L. Renfrow	HCR-102-A-2

CONFIRMATION NO. 4269

OC000000025988845

Arnold S. Weintraub
The Weintraub Group
32000 Northwestern Highway
Suite 240
Farmington Hills, MI 48334

Date Mailed: 09/25/2007

NOTICE REGARDING CHANGE OF POWER OF ATTORNEY

This is in response to the Power of Attorney filed 08/31/2007.

- The withdrawal as attorney in this application has been accepted. Future correspondence will be mailed to the new address of record. 37 CFR 1.33.

Kimberly Krabinet
Office of Initial Patent Examination (571) 272-4000, or 1-800-PTO-9199
FORMER ATTORNEY/AGENT COPY

UNITED STATES PATENT AND TRADEMARK OFFICE

Commissioner for Patents
United States Patent and Trademark Office
P.O. Box 1450
Alexandria, VA 22313-1450
www.uspto.gov

Patent Capital Group
6119 McCommas Blvd
Dallas TX 75214

COPY MAILED
NOV 24 2009
OFFICE OF PETITIONS

In re Application of
Anwar, et al.
Application No. 11/071,006
Filed: March 3, 2005
Attorney Docket No. 076103.0102

ON PETITION

This is a decision on the petition under the unintentional provisions of 37 CFR 1.137(b), filed March 20, 2009, to revive the above-identified application.

The petition is **DISMISSED**.

Any request for reconsideration of this decision must be submitted within TWO (2) MONTHS from the mail date of this decision. Extensions of time under 37 CFR 1.136(a) are permitted. The reconsideration request should include a cover letter entitled "Renewed Petition under 37 CFR 1.137(b)." This is **not** a final agency action within the meaning of 5 U.S.C. § 704.

The application became abandoned December 1, 2008 for failure to timely submit a proper appeal brief in response to the Notice of Non-Compliant Appeal Brief (Notice) mailed October 31, 2008. The Notice set a one month or 30 day (whichever is longer) month non-statutory period of time for reply. No extension of time pursuant to 37 CFR 1.136(a) was sought. Notice of Abandonment was mailed March 13, 2009.

A grantable petition under 37 CFR 1.137(b) must be accompanied by: (1) the required reply, unless previously filed; (2) the petition fee as set forth in 37 CFR 1.17(m); (3) a statement that the entire delay in filing the required reply from the due date for the reply until the filing of a grantable petition pursuant to 37 CFR 1.137(b) was unintentional; and (4) any terminal disclaimer (and fee as set forth in 37 CFR 1.20(d)) required by 37 CFR 1.137(d). Where there is a question as to whether either the abandonment or the delay in filing a petition under 37 CFR 1.137 was unintentional, the Director may require additional information. See MPEP 711.03(c)(II)(C) and (D). The instant petition lacks item(s) .

The instant petition fails to comply with requirement (1) set forth above. The examiner of record indicates that:

> "The appeal brief filed on 03/20/2009 is missing the sections "Real Party of Interest," "Related Appeal and Interference," "Summary of Claimed Subject Matter," and "Related

Proceedings Appendix" and included incorrect claim in the Ground of Rejection to be Review on Appeal."

Accordingly, the appeal brief filed March 20, 2009 cannot be entered into the record. Any request for reconsideration must include an appeal brief in full compliance with 37 CFR 41.37.

Further correspondence with respect to this matter should be addressed as follows:

By Mail: Mail Stop PETITION
Commissioner for Patents
P. O. Box 1450
Alexandria, VA 22313-1450

By hand: U. S. Patent and Trademark Office
Customer Service Window, Mail Stop Petitions
Randolph Building
401 Dulany Street
Alexandria, VA 22314

The centralized facsimile number is **(571) 273-8300.**

Telephone inquiries concerning this decision should be directed to the undersigned at (571) 272-3205.

/ALESIA M. BROWN/

Alesia M. Brown
Petitions Attorney
Office of Petitions

UNITED STATES PATENT AND TRADEMARK OFFICE

Commissioner for Patents
United States Patent and Trademark Office
P.O. Box 1450
Alexandria, VA 22313-1450
www.uspto.gov

MINTZ, LEVIN, COHN, FERRIS, GLOVSKY
AND POPEO, P.C.
ONE FINANCIAL CENTER
BOSTON MA 02111

COPY MAILED

AUG 15 2006

OFFICE OF PETITIONS

In re Application of	:	
SHNEIDER et al.	:	
Application No. 11/071,008	:	DECISION ON PETITION
Filed: March 3, 2005	:	TO WITHDRAW
Attorney Docket No. 25955-004 CIP	:	FROM RECORD
	:	

This is a decision on the Request to Withdraw as attorney or agent of record under 37 C.F.R. § 1.36(b), filed March 9, 2006.

The request is **APPROVED**.

A grantable request to withdraw as attorney/agent of record must be signed by every attorney/agent seeking to withdraw or contain a clear indication that one attorney is signing on behalf of another/others. A request to withdraw will not be approved unless at least 30 (thirty) days would remain between the date of approval and the later of the expiration date of a time to file a response or the expiration date of the maximum time period which can be extended under 37 C.F.R. § 1.136(a).

The request was signed by Robert J. Sayre on behalf of all attorneys of record who are associated with customer No. 30623.

All attorneys/agents associated with the Customer Number 30623 have been withdrawn.

Applicant is reminded that there is no attorney of record at this time.

All future correspondence will be directed to the first named inventor Alexander M. Shneider at the address indicated below.

Telephone inquiries concerning this decision should be directed to Monica A. Graves at 571-272-7253.

David Bucci
Petitions Examiner
Office of Petitions

cc: Alexander M. Shneider
CURELAB, INC.
26 Patricia Drive
Stoughton, MA 02072

UNITED STATES PATENT AND TRADEMARK OFFICE

Commissioner for Patents
United States Patent and Trademark Office
P.O. Box 1450
Alexandria, VA 22313-1450
www.uspto.gov

ALEXANDER M. SHNEIDER
CURELAB, INC.
26 PATRICIA DRIVE
STOUGHTON MA 02072

COPY MAILED

MAY 01 2009

OFFICE OF PETITIONS

In re Application of :
SHNEIDER, Alexander M. et al. :
Application No. 11/071,008 :
Filed: March 03, 2005 :
Attorney Docket No. **25955-004 CIP** :

DECISION ON PETITION
TO WITHDRAW
FROM RECORD

This is a decision on the Request to Withdraw as attorney or agent under 37 C.F.R. § 1.36(b) or 37 C.F.R. § 10.40 filed December 09, 2008.

The request is **NOT APPROVED**.

A review of the file record indicates that Lisa A. Haile does not have power of attorney in this patent application nor is there any statement or evidence of record of employment in or otherwise being engaged in the proceedings in this patent application. Accordingly, the change of address is not applicable.

All future communications from the Office will continue to be directed to the below-listed address until otherwise properly notified by the applicant.

Telephone inquires concerning this decision should be directed to Tredelle Jackson at 571-272-2783.

Tredelle D. Jackson
Paralegal Specialist
Office of Petitions

cc: **ALEXANDER M. SHNEIDER**
CURE LAB, INC.
216 BOLIVAR STREET

UNITED STATES PATENT AND TRADEMARK OFFICE

Commissioner for Patents
United States Patent and Trademark Office
P.O. Box 1450
Alexandria, VA 22313-1450
www.uspto.gov

CARLSON, GASKEY & OLDS,
P.C.
400 WEST MAPLE ROAD
SUITE 350
BIRMINGHAM MI 48009

COPY MAILED

MAR 1 4 2008

OFFICE OF PETITIONS

In re Application of

Velez, et al. :

Application No. 11/071,009

: DECISION ON PETITION

Filed: March 3, 2005

:

Attorney Docket No. 67192-007

This is a decision on the petition under 37 CFR 1.137(b), filed February 21, 2008, to revive the above-identified application.

The petition is **GRANTED**.

The above-cited application became abandoned for failure to reply in a timely manner to the Notice of Non-Compliant Amendment mailed July 23, 2007, which set a shortened period for reply of one (1) month from its mailing date. No extension of time pursuant to 37 CFR 1.136(a) was obtained within the allowable period. Accordingly, the application became abandoned on August 24, 2007. A Notice of Abandonment was mailed on February 15, 2008.

The response filed February 21, 2008, is noted.

The application is being forwarded to Technology Center 3600, GAU 3679 for further processing.

Telephone inquiries concerning this decision should be directed to the undersigned at (571) 272-3222.

Kenya A. McLaughlin
Petitions Attorney
Office of Petitions

UNITED STATES PATENT AND TRADEMARK OFFICE

040097

Commissioner for Patents
United States Patent and Trademark Office
P.O. Box 1450
Alexandria, VA 22313-1450
www.uspto.gov

DUANE A. STEWART III, ESQ.
BUCHANAN INGERSOLL PC
ONE OXFORD CENTER, 20TH FLOOR
301 GRANT STREET
PITTSBURGH, PA 15219

COPY MAILED
JUN 28 2005
OFFICE OF PETITIONS

In re Application of
George Pollack
Application No. 10/215,303
Filed: August 6, 2002
Attorney Docket No. 103795-411-NP

ON PETITION

This is a decision on the petition under 37 CFR 1.181(a), filed February 14, 2005, to refund the petition fee and issue fee paid January 7, 2005.[1]

The petition under 37 CFR 1.181(a) is **DISMISSED** as involving moot issues.

This application became abandoned April 9, 2004 for failure to timely pay the issue fee on or before April 8, 2004. Accordingly, a Notice of Abandonment was mailed May 27, 2004. A decision mailed February 3, 2005, on a petition filed under 37 CFR 1.181(b) on January 7, 2005 and in the alternative under 37 CFR 1.137(a), withdrew the holding of abandonment and dismissed as moot the unavoidable claim. The decisions were based on evidence presented that due to an error on the part of the USPTO, the Notice of Allowance was sent to the wrong address and that it was therefore never received by the proper party of record.

A review of the finance records reveal that the issue fee was credited to a suspense account on January 11, 2005, meaning that the money remains in the USPTO but is not of record, and that in accordance with the decision on petition mailed February 3, 2005, the fee for the petition under 37 CFR 1.137(a) was refunded.

Since payment of the petition fee and the issue fee is therefore not of record, this matter is being referred back to Technology Center 1751 for a re-mailing of the Notice of Allowance, Notice of Allowability and Determination of Patent Term Adjustment under 35 U.S.C. 154(b) and for a restarting of the period for reply.

Telephone inquiries concerning this matter may be directed to the undersigned Petitions Attorney at (571) 272-3212.

Patricia Faison-Ball

Patricia Faison-Ball
Senior Petitions Attorney
Office of Petitions

[1] A Petition for Patent Term Adjustment also filed February 14, 2005 was dismissed in view of the decision in the instant matter.

Docketed on Computer
Angie Beyerl

UNITED STATES PATENT AND TRADEMARK OFFICE

Commissioner for Patents
United States Patent and Trademark Office
P.O. Box 1450
Alexandria, VA 22313-1450
www.uspto.gov

TEXAS INSTRUMENTS INCORPORATED
P O BOX 655474, M/S 3999
DALLAS, TX 75265

COPY MAILED

MAR 1 0 2008

OFFICE OF PETITIONS

In re Application of
David A. Figoli
Application No. 11/071,027
Filed: March 3, 2005
Attorney Docket No: TI-38163

ON PETITION

This is a decision on the petition under the unintentional provisions of 37 CFR 1.137(b), filed October 19, 2007, to revive the above-identified application.

The petition is **GRANTED**.

This application became abandoned for failure to timely pay the issue and publication fees on or before May 9, 2007, as required by the Notice of Allowance and Fee(s) Due, mailed February 9, 2007. A Notice of Abandonment was mailed on June 7, 2007. In response, on October 19, 2007, the present petition was filed.

The petition satisfies the requirements of 37 CFR 1.137(b) in that petitioner has supplied (1) the reply in the form of payment of the issue fee of $1,440 and the publication fee of $300, (2) the petition fee of $1,540; and (3) an adequate statement of unintentional delay.

The application is being referred to the Office of Data Management to be processed into a patent.

Telephone inquires related to this decision should be directed to the undersigned at (571) 272-3204. Telephone inquiries related to processing as a patent should be directed to (571) 272-4200.

Sherry D. Brinkley
Petitions Examiner
Office of Petitions

UNITED STATES PATENT AND TRADEMARK OFFICE

Commissioner for Patents
United States Patent and Trademark Office
P.O. Box 1450
Alexandria, VA 22313-1450
www.uspto.gov

DAVIS WRIGHT TREMAINE, LLP
2600 CENTURY SQUARE
1501 FOURTH AVENUE
SEATTLE WA 98101-1688

COPY MAILED
NOV 0 7 2005
OFFICE OF PETITIONS

In re Application of	:
Maceda et al.	:
Application No. 11/071,033	: DECISION REFUSING STATUS
Filed: March 2, 2005	: UNDER 37 CFR 1.47(a)
Attorney Docket No. 53353-48	:

This is in response to the petition under 37 CFR 1.47(a), filed October 18, 2005. Applicants obtained an extension of time for response within the fifth month. Accordingly, the petition is filed timely.

The petition is dismissed.

Applicants are given TWO (2) MONTHS from the mailing date of this decision to reply, correcting the below-noted deficiencies. Any reply should be entitled "Request for Reconsideration of Petition Under 37 CFR 1.47(a)," and should address the deficiencies noted below, except that the reply may include an oath or declaration executed by the non-signing inventor(s). Failure to respond will result in abandonment of the application. Any extensions of time will be governed by 37 CFR 1.136(a). No petition fee is required for the filing of the Request for Reconsideration.

A grantable petition under 37 CFR 1.47(a) requires: (1) proof that the non-signing inventor cannot be reached or refuses to sign the oath or declaration after having been presented with the application papers (specification, claims and drawings); (2) an acceptable oath or declaration in compliance with 35 U.S.C. §§ 115 and 116; (3) the petition fee; and (4) a statement of the last known address of the non-signing inventor.

Applicants lack items (1) and (2) set forth above.

In the present petition, applicants asserted that inventors, Joseph P. Maceda, John L. Grimes and Svein Hestivik, were unavailable to sign the declaration. In support of this assertion, applicants submitted the Declaration of Brian L. Johnson, attorney for applicants. Mr. Johnson declared that copies of the application and declarations were mailed to the above-noted non-signing inventors at their respective last known addresses. Mr. Johnson further stated that the copies of the application and the declarations were all returned as undeliverable with an indication that each of the non-signing inventors were unavailable at their respective last known addresses. Applicants did not provide the USPTO with copies of the three returned envelopes with the present petition.

As to item (1), applicants failed to show that the inventors could not be reached after diligent efforts. In the present petition, applicants did not set forth in detail why the envelopes could not be delivered by the postal service, or explain what diligent efforts applicants made to obtain current mailing or email addresses for the non-signing inventors. Additionally, it is unclear if Mr. Johnson personally mailed the documents to the non-signing inventors, and therefore, has firsthand knowledge of the facts. Accordingly, the record currently fails to demonstrate, with a documented showing, that a diligent effort was made to find or locate the non-signing inventors so as to obtain their signatures on the declaration, such that the declaration can be accepted under 37 CFR 1.47.

Where inability to find or locate a named inventor is alleged, a statement of facts should be submitted that fully describes the exact facts which are relied on to establish that a diligent effort was made to locate the inventor. A person having firsthand knowledge of the facts must sign the statement of facts, where at all possible. If attempts to obtain forwarding addresses and to locate the non-signing inventors by other means such as through E-mail, telephone, the Internet, or an employer continue to fail, then applicants will have provided the necessary proof required under 37 CFR 1.47 that the inventors cannot be reached. Applicants should submit documentary evidence of their attempts to obtain the most current addresses of the non-signing inventors. It is important that the forthcoming communication contains statements of fact as opposed to conclusions. If there is an express oral refusal, a statement from the person to whom that refusal was made should be made of record.

As to item (2), the Notice to File Corrected Application Papers mailed on March 31, 2005, required applicants to submit a new oath or declaration in compliance with 37 CFR 1.63. With the petition,

applicants submitted a Declaration (37 CFR 1.63) for Utility or Design Application Using an Application Data Sheet (37 CFR 1.76). However, the Office does not have a record of receiving an ADS previously or with the present petition. The Office notes: "If an application data sheet (37 CFR 1.76) is used, data supplied in the application data sheet need not be provided elsewhere in the application except that the citizenship of each inventor must be provided in the oath or declaration under 37 CFR 1.63 even if this information is provided in the application data sheet (see 37 CFR 1.76(b))." MPEP 601(I). With any request for reconsideration, applicants should submit a copy of their ADS or a newly executed oath or declaration.

The $200.00 petition fee will be charged to applicants' Deposit Account, as authorized.

Further correspondence with respect to this matter should be addressed as follows and **to the attention of Christina Tartera Donnell, Senior Petitions Attorney:**

By mail: Mail Stop Petition
Commissioner for Patents
P.O. Box 1450
Alexandria, VA 22313-1450

By FAX: (571) 273-8300
Attn: Office of Petitions

By hand: Customer Service Window
Randolph Building
401 Dulany Street
Alexandria, VA 22314

Telephone inquiries related to this decision may be directed to the undersigned at (571) 272-3211.

Christina Tartera Donnell

Christina Tartera Donnell
Senior Petitions Attorney
Office of Petitions

UNITED STATES PATENT AND TRADEMARK OFFICE

Commissioner for Patents
United States Patent and Trademark Office
P.O. Box 1450
Alexandria, VA 22313-1450
www.uspto.gov

THOMAS, KAYDEN, HORSTEMEYER & RISLEY, LLP
100 GALLERIA PARKWAY, NW
STE 1750
ATLANTA GA 30339-5948

COPY MAILED

JUN 12 2007

OFFICE OF PETITIONS

In re Application of
Brian Kelly
Application No. 11/071,035
Filed: 03-03-2005
Attorney Docket No. 81825-1060

DECISION ON PETITION

This is a decision on the petition under 37 CFR 1.181, filed January 23, 2007, to withdraw the holding of abandonment for the above-identified application.

This application was held abandoned for failure to respond timely to the nonfinal Office Action, mailed May 17, 2006, which set a three-month shortened statutory period for reply. In the apparent absence of a timely filed response, the application was held abandoned and a Notice of Abandonment was mailed on January 3, 2007.

Petitioners asserted that they filed a timely reply to the nonfinal Office action in the form of an Amendment and Terminal Disclaimer on July 26, 2006, and July 28, 2006, respectively. Although the Certificate of Facsimile Transmission identified an incorrect application number, the correct application number appeared on the reply. Petitioners provided the Office with a copy of the amendment and terminal disclaimer with the present petition.

Upon a review of the record, the Office has located the Amendment and the Terminal Disclaimer, filed on July 26, 2006, and July 28, 2006, respectively, in response to the nonfinal Office action. Accordingly, the petition is **granted**.

The Notice of Abandonment was mailed in error and is hereby withdrawn. The application is restored to pending status in view of the fact that a response was timely filed and received on July 26, 2006, and July 28, 2006.

The matter is being referred to the Technology Center AU 3711for appropriate action in the normal course of business on the reply received with petition.

Telephone inquiries concerning this matter may be directed to the undersigned at (571) 272-3211.

Christina Tartera Donnell

Christina Tartera Donnell
Senior Petitions Attorney
Office of Petitions

UNITED STATES PATENT AND TRADEMARK OFFICE

Commissioner for Patents
United States Patent and Trademark Office
P.O. Box 1450
Alexandria, VA 22313-1450
www.uspto.gov

JJGJR.: 09-05

Paper No: __

COPY MAILED

SEP 1 6 2005

OFFICE OF PETITIONS

MARK EATON
2020 CENTIMETER CIRCLE
AUSTIN TX 78758

In re Application of	:	
Potter	:	
Application No. 11/071,038	:	DECISION ON PETITION
Filing Date: 23 March, 2005	:	
Attorney Docket No. 39140.009	:	

This is a decision on the petition filed on 18 June, 2005, and considered herein under 37 C.F.R. §1.53.

For the reasons set forth below, the instant petition is **DISMISSED**.

BACKGROUND

The instant application was deposited on 3 March, 2005.

On 27 April, 2005, the Office mailed a Notice of Missing Parts, stating therein: "An application number and filing date have been accorded to this application[,]" but noting that Page 15 of the specification appeared to have been omitted on filing. OIPE further indicated that Petitioner might contend via petition (with fee) that the item(s) in question were deposited and provide evidence thereof along with a copy of the paper(s) in question; provide the omitted item(s) and accept the date of submission as the date of filing; or accept the application in its condition absent the paper(s) in question.

On 18 June, 2005, Petitioner filed a reply to the Notice and further filed the instant petition alleging that the omitted item, Page 5 of the specification, was deposited with the application,

and Petitioner submitted a copy of a receipt card (see: MPEP §503[1]), which Petitioner avers evidences receipt of the application by the Office.

A review of the receipt card in question evidences that it bears no showing whatsoever of receipt by the Office–there is no date stamp as to receipt date, no Application Number, no Office department identified as receiving the application, and there is no U.S. Postal Service (USPS) postage cancellation in evidence. What is supplied appears to be a file copy of the receipt card as submitted to the Office, not as received back by Petitioner from the Office evidencing receipt by the Office.

Petitioner has made no showing in support of the petition.

CONCLUSION

Therefore, the instant petition is **dismissed**.

---

[1] MPEP §503 provides in pertinent part:

§503 Application Number and Filing Receipt

* * *

A return postcard should be attached to *each* patent application for which a receipt is desired. It is important that the return postcard itemize all of the components of the application. If the postcard does not itemize each of the components of the application, it will not serve as evidence that any component which was not itemized was received by the United States Patent and Trademark Office (USPTO). It should be recognized that the identification of an application by application number does not necessarily signify that the USPTO has accepted the application as complete (37 C.F.R. §1.53(a)).

* * *

RETURN POSTCARD

If a receipt of any item (e.g., paper or fee) filed in the USPTO is desired, it may be obtained by enclosing with the paper a self-addressed postcard specifically identifying the item. The USPTO will stamp the receipt date on the postcard and place it in the outgoing mail. A postcard receipt which itemizes and properly identifies the items which are being filed serves as *prima facie* evidence of receipt in the USPTO of all the items listed thereon on the date stamped thereon by the USPTO.

The identifying data on the postcard should be so complete as to clearly identify the item for which receipt is requested. For example, the postcard should identify the applicant's name, application number (if known), confirmation number (if known), filing date, interference number, title of the invention, etc. The postcard should also identify the type of paper being filed, e.g., new application, affidavit, amendment, notice of appeal, appeal brief, drawings, fees, motions, supplemental oath or declaration, petition, etc., and the number of pages being submitted. If a new application is being filed, all parts of the application being submitted should be separately listed on the postcard, e.g., the number of pages of specification (including written description, claims and abstract), number of claims, number of sheets of drawings, number of pages of oath/declaration, number of pages of cover sheet (provisional application).

The postcard receipt will not serve as *prima facie* evidence of receipt of any item which is not adequately itemized on the postcard. For example, merely listing on the postcard "a complete application" or "patent application" will not serve as a proper receipt for each of the required components of an application (e.g., specification (including claims), drawings (if necessary), oath or declaration and the application filing fee) or missing portions (e.g., pages, sheets of drawings) of an application if one of the components or portion of a component is found to be missing by the USPTO. Each separate component should be specifically and properly itemized on the postcard. Furthermore, merely incorporating by reference in the postcard receipt, the items listed in a transmittal letter will not serve as *prima facie* evidence of receipt of those items.

The person receiving the item(s) in the USPTO will check the listing on the postcard against the item(s) being filed to be sure they are properly identified and that all the items listed on the postcard are presently being submitted to the USPTO. If any of the items listed on the postcard are not being submitted to the USPTO, those items will be crossed off and the post-card initialed by the person receiving the items. Upon return of a postcard receipt from the USPTO, the postcard receipt should be promptly reviewed by the person who filed the items to ensure that every item specifically denoted on the postcard was received by the USPTO. If the postcard receipt has been annotated to indicate that a particular item denoted on the postcard was not received by the USPTO, the postcard receipt will not serve as *prima facie* evidence of receipt of that item in the USPTO. (Emphasis supplied.)

This file (Image File Wrapper (IFW)) is released to OIPE for further processing as necessary before being forwarded for examination in due course.

Telephone inquiries concerning this decision may be directed to the undersigned at (571) 272-3214.

John J. Gillon, Jr.
Senior Attorney
Office of Petitions

UNITED STATES PATENT AND TRADEMARK OFFICE

Commissioner for Patents
United States Patent and Trademark Office
P.O. Box 1450
Alexandria, VA 22313-1450
www.uspto.gov

JJGJR.: 01-06

Paper No: __

COPY MAILED

JAN 2 7 2006

OFFICE OF PETITIONS

MARK EATON
2020 CENTIMETER CIRCLE
AUSTIN TX 78758

In re Application of	:	
Potter	:	
Application No. 11/071,038	:	DECISION ON PETITION
Filing Date: 23 March, 2005	:	
Attorney Docket No. 39140.009	:	

This is a decision on the petition filed on 6 October, 2005, and considered herein under 37 C.F.R. §1.53.

NOTE: **Petitioner's attention is directed to the Rules of Practice at 37 C.F. R. Part 1, and in particular those at 37 C.F.R. §1.31, as to those who may practice before the Office.[1] An applicant may prosecute his/her application without assistance of representation. However, should an applicant seek representation those who may act in this regard must be admitted to practice before the Office by the Office.**

---

[1] The rules at 37 C.F.R. § 1.31 provide:

§ 1.31 Applicants may be represented by a registered attorney or agent.
An applicant for patent may file and prosecute his or her own case, or he or she may be represented by a registered attorney, registered agent, or other individual authorized to practice before the United States Patent and Trademark Office in patent matters. *See* §§ 11.6 and 11.9 of this subchapter. The United States Patent and Trademark Office cannot aid in the selection of a registered attorney or agent.
[50 FR 5171, Feb. 6, 1985, effective Mar. 8, 1985; revised, 69 FR 29865, May 26, 2004, effective June 25, 2004; revised 69 FR 35427, June 24, 2004, effective July 26, 2004]

The instant petition is **GRANTED**.

BACKGROUND

The instant application was deposited on 3 March, 2005.

Thereafter, on 27 April, 2005, the Office mailed a Notice of Missing Parts, stating therein: "An application number and filing date have been accorded to this application[,]" but noting that Page 15 of the specification appeared to have been omitted on filing. OIPE further indicated that Petitioner might contend via petition (with fee) that the item(s) in question were deposited and provide evidence thereof along with a copy of the paper(s) in question; provide the omitted item(s) and accept the date of submission as the date of filing; or accept the application in its condition absent the paper(s) in question.

On 18 June, 2005, Petitioner filed a reply to the Notice and further filed the original petition alleging that the omitted item, Page 5 of the specification, was deposited with the application, and Petitioner submitted a copy of a receipt card (see: MPEP §503[2]), which Petitioner averred

---

[2] MPEP §503 provides in pertinent part:

§503 Application Number and Filing Receipt

* * *

A return postcard should be attached to *each* patent application for which a receipt is desired. It is important that the return postcard itemize all of the components of the application. If the postcard does not itemize each of the components of the application, it will not serve as evidence that any component which was not itemized was received by the United States Patent and Trademark Office (USPTO). It should be recognized that the identification of an application by application number does not necessarily signify that the USPTO has accepted the application as complete (37 C.F.R. §1.53(a)).

* * *

RETURN POSTCARD

If a receipt of any item (e.g., paper or fee) filed in the USPTO is desired, it may be obtained by enclosing with the paper a self-addressed postcard specifically identifying the item. The USPTO will stamp the receipt date on the postcard and place it in the outgoing mail. A postcard receipt which itemizes and properly identifies the items which are being filed serves as *prima facie* evidence of receipt in the USPTO of all the items listed thereon on the date stamped thereon by the USPTO.

The identifying data on the postcard should be so complete as to clearly identify the item for which receipt is requested. For example, the postcard should identify the applicant's name, application number (if known), confirmation number (if known), filing date, interference number, title of the invention, etc. The postcard should also identify the type of paper being filed, e.g., new application, affidavit, amendment, notice of appeal, appeal brief, drawings, fees, motions, supplemental oath or declaration, petition, etc., and the number of pages being submitted. If a new application is being filed, all parts of the application being submitted should be separately listed on the postcard, e.g., the number of pages of specification (including written description, claims and abstract), number of claims, number of sheets of drawings, number of pages of oath/declaration, number of pages of cover sheet (provisional application).

The postcard receipt will not serve as *prima facie* evidence of receipt of any item which is not adequately itemized on the postcard. For example, merely listing on the postcard "a complete application" or "patent application" will not serve as a proper receipt for each of the required components of an application (e.g., specification (including claims), drawings (if necessary), oath or declaration and the application filing fee) or missing portions (e.g., pages, sheets of drawings) of an application if one of the components or portion of a component is found to be missing by the USPTO. Each separate component should be specifically and properly itemized on the postcard. Furthermore, merely incorporating by reference in the postcard receipt, the items listed in a transmittal letter will not serve as *prima facie* evidence of receipt of those items.

The person receiving the item(s) in the USPTO will check the listing on the postcard against the item(s) being filed to be sure they are properly identified and that all the items listed on the postcard are presently being submitted to the USPTO. If any of the items listed on the postcard are not being submitted to the USPTO, those items will be crossed off and the post-card initialed by the person receiving the items. Upon return of a postcard receipt from the USPTO, the postcard receipt should be promptly reviewed by the person who filed the items to ensure

evidenced receipt of the application by the Office. However, a review of the receipt card in question evidenced that it offered no showing whatsoever of receipt by the Office because there was no date stamp as to receipt date, no Application Number, no Office department identified as receiving the application, and there is no U.S. Postal Service (USPS) postage cancellation in evidence. What was supplied appears to be a file copy of the receipt card as submitted to the Office, not as received back by Petitioner from the Office evidencing receipt by the Office. Because Petitioner made no showing in support of the petition, it was dismissed on 16 September, 2005.

The instant petition was filed on 6 October, and therewith Petitioner includes a date-stamped ("030305") receipt card which provides in pertinent part:

* * *

Specification, claims abstract	22 pages
Drawings	6 pages

* * *

Because Petitioner's receipt card adequately itemized the contents of the application on the receipt card, it is concluded that the application, including page 15 of the specification (description, claims and abstract), was deposited with the Office on 3 March, 2005, and subsequently was misplaced in the Office.

Accordingly, the application, including page 15 of the specification (description, claims and abstract), is entitled to a filing date of 3 March, 2005.

The Notice mailed on 27 April, 2005, was sent in error and is hereby vacated to the extent that it stated that the application was filed omitting page 15 of the specification (description, claims and abstract).

CONCLUSION

The petition is **granted** and the petition fee waived and refunded.

This application is released to OIPE for further processing with a filing date of 3 March, 2005, for the entire application with pages 1 - 22 of the specification (description, claims and abstract) and Figs. 1 - 6 (drawings sheets 1 - 6 of 6) using:

- **pages 1 - 14 and 16 - 22 of specification (description, claims and abstract) and Figs. 1**

---

that every item specifically denoted on the postcard was received by the USPTO. If the postcard receipt has been annotated to indicate that a particular item denoted on the postcard was not received by the USPTO, the postcard receipt will not serve as *prima facie* evidence of receipt of that item in the USPTO. (Emphasis supplied.)

- 6 (drawings sheets 1 - 6 of 6) deposited on 3 March, 2005; and

- **page 15 of specification (description, claims and abstract) deposited on 6 October, 2005; and further**

with direction to OIPE to correct Office records and provide to Petitioner a corrected filing receipt setting forth a filing date of 3 March, 2005, and reflecting therein that 22 pages of specification (description, claims and abstract) and Figs. 1 - 6 (drawings sheets 1 - 6 of 6) were present on filing.

Telephone inquiries specific to this decision should be directed to the undersigned at (571) 272-3214.

John J. Gillon, Jr.
Senior Attorney
Office of Petitions

UNITED STATES PATENT AND TRADEMARK OFFICE

Commissioner for Patents
United States Patent and Trademark Office
P.O. Box 1450
Alexandria, VA 22313-1450
www.uspto.gov

PEARSON & PEARSON, LLP
10 GEORGIA STREET
LOWELL, MA 01852

COPY MAILED
OCT 0 2 2006
OFFICE OF PETITIONS

In re Application of	:	
Michael B. McGrath et al	:	
Application No. 11/071,053	:	ON PETITION
Filed: March 2, 2005	:	
Attorney Docket No. 33697	:	

This is a decision on the petition under 37 CFR 1.137(b), filed August 4, 2006, to revive the above-identified application.

The petition is **GRANTED.**

The above-identified application became abandoned for failure to submit the Issue fee in a timely manner in reply to the Notice of Allowance mailed April 18, 2006, which set a statutory period for reply of three (3) months. Accordingly, the above-identified application became abandoned on July 19, 2006.

The petition satisfies the conditions for revival pursuant to the provisions of 37 CFR 1.137(b) in that (1) the reply in the form of payment of the issue fee; (2) the petition fee; and (3) the required statement of unintentional delay have been received. Accordingly, the issue fee is accepted as having been unintentionally delayed.

Telephone inquiries concerning this decision should be directed to the undersigned at (571) 272-3210.

This matter is being referred to the Publishing Division for further processing.

Irvin Dingle
Petitions Examiner
Office of Petitions

UNITED STATES PATENT AND TRADEMARK OFFICE

COMMISSIONER FOR PATENTS
UNITED STATES PATENT AND TRADEMARK OFFICE
P.O. BOX 1450
ALEXANDRIA, VA 22313-1450
www.uspto.gov

William R. Evans
Ladas & Parry
26 West 61 Street
New York, NY 10023

COPY MAILED

FEB 08 2006

OFFICE OF PETITIONS

In re Application of

De Castro, et al

Application No. 11/071,056

Filed: March 3, 2005

Attorney Docket No. U015657-6

DECISION ON PETITION

This is a decision on the petition to withdraw the holding of abandonment under 37 CFR 1.181(a), filed January 17, 2006.

The petition is **granted**.

This application was held abandoned on June 7, 2005, after no reply was received to the Notice to File Missing Parts of Nonprovisional Application mailed April 6, 2005. The notice set forth a shortened period for reply of two months from its mailing date. The instant petition was filed on January 17, 2006. Petitioner maintains that the notice of April 6, 2005, was never received and provides a copy of the relevant docketing calendar as proof of the same.

Section 711.03(c)(II) of the *Manual of Patent Examining Procedure* ("MPEP") provides that in order to establish non-receipt of an Office action so as prove that the imposition of a holding of abandonment is improper, petitioner must: 1) provide a statement to the Office indicating that the Office action was not received by petitioner; 2) include in the statement an attestation to the fact that a review of the file jacket and docket records maintained by petitioner indicates that the Office action was not received; and 3) provide a copy of the docket record where the non-received Office communication would have been entered had it been received and docketed.

Petitioner has met the burden of proof as established by Section 711.03(c)(II) of the MPEP. The holding of abandonment is, therefore, withdrawn.

The application file is being forwarded to the Office of Initial Patent Examination for further processing.

Questions concerning this decision should be directed to the undersigned at (571) 272-3222.

Kenya A. McLaughlin

Kenya A. McLaughlin
Petitions Attorney
Office of Petitions

UNITED STATES PATENT AND TRADEMARK OFFICE

Commissioner for Patents
United States Patent and Trademark Office
P.O. Box 1450
Alexandria, VA 22313-1450
www.uspto.gov

MAILED
FROM DIRECTORS OFFICE

APR 11 2007

TECHNOLOGY CENTER 3600

LADAS & PARRY
26 WEST 61ST STREET
NEW YORK, NY 10023

In re Application of	:	
Abel Ramon Vela-Cobos	:	DECISION ON PETITION
Application No. 11/071,057	:	UNDER 37 CFR §1.181
Filed: March 3, 2005	:	
Attorney Docket No.: U 015588-9	:	
For: PREVENTIVE SEAT AND	:	
PROPHYLACTIC AND METHOD	:	

This is a decision on applicants' petition under 37 CFR 1.181 filed April 2, 2007 to invoke supervisory review of the Advisory Action mailed March 26, 2007.

The petition is **DISMISSED.**

The record reflects that on March 26, 2007 an Advisory Action was mailed in response to the response after final filed March 16, 2007. The Advisory Action stated that the request for reconsideration did not place the application in condition for allowance as the examiner maintained the 102(e) rejection of Bieganek et al.

In the letter of April 2, 2007, Applicant invoked supervisory authority under 37 CFR 1.181(a)(3). This request has been treated as a Petition under 37 CFR 1.181.

In response, it is noted that the rejection by the examiner is an **appealable matter** not a petitionable matter. It has been determined that the examiner did not take an arbitrary or capricious action and the action therefore has not been reviewed on the merits by the supervisor.

The petition is **DISMISSED.**

Wynn Coggins, Director
Patent Technology Center 3600
(571) 272-5350

UNITED STATES PATENT AND TRADEMARK OFFICE

Commissioner for Patents
United States Patent and Trademark Office
P.O. Box 1450
Alexandria, VA 22313-1450
www.uspto.gov

MAILED
FROM DIRECTOR'S OFFICE

MAY 2 4 2007

TECHNOLOGY CENTER 3600

LADAS & PARRY
26 WEST 61ST STREET
NEW YORK, NY 10023

In re Application of
Abel Ramon Vela-Cobos
Application No. 11/071,057
Filed: March 3, 2005
Attorney Docket No.: U 015588-9
For: PREVENTIVE SEAT AND PROPHYLACTIC AND METHOD THEREOF

DECISION ON PETITION UNDER 37 CFR §1.181

This is a decision on applicants' renewed petition under 37 CFR 1.181 filed April 17, 2007.

The petition is **DENIED.**

The record reflects that on March 26, 2007 an Advisory Action was mailed in response to the response after final filed March 16, 2007. The Advisory Action stated that the request for reconsideration did not place the application in condition for allowance as the examiner maintained the 102(e) rejection of Bieganek et al.

In the letter of April 2, 2007, Applicant invoked supervisory authority under 37 CFR 1.181(a)(3). This request was treated as a Petition under 37 CFR 1.181. This Petition was dismissed as it was noted that the rejection by the examiner is an appealable matter not a petitionable matter.

On April 17, 2007, Applicant submitted a Renewed Petition Under 37 CFR 1.181. This petition stated that the "Advisory Action of March 26, 2007, indicates 'no basis' for a rejection under 35 USC 102 to be traversed when the claimed 'invention identical' to the reference, whereas MPEP 2131 specifically requires this." From this Petition, it is not known what relief is requested by Applicant. The issue at hand still appears to be the 35 USC 102 rejection. Again it is noted that if Applicant requires further review of the action taken by the examiner, this would be an appealable matter, not a petitionable matter.

Any questions regarding this decision should be directed to David Dunn at 571-272-6670.

The petition is **DENIED.**

Wyatt Coggins, Director
Patent Technology Center 3600
(571) 272-5350

dd/snm: 5/20/07

SNM

UNITED STATES PATENT AND TRADEMARK OFFICE

UNITED STATES DEPARTMENT OF COMMERCE
United States Patent and Trademark Office
Address: COMMISSIONER FOR PATENTS
P.O. Box 1450
Alexandria, Virginia 22313-1450
www.uspto.gov

Fish & Richardson PC
P.O.Box 1022
Minneapolis, MN 55440

Mail Date: 04/21/2010

Applicant	: Lawrence W. Yonge III	: DECISION ON REQUEST FOR
Patent Number	: 7636370	: RECALCULATION of PATENT
Issue Date	: 12/22/2009	: TERM ADJUSTMENT IN VIEW
Appliction No	: 11/071,059	: OF WYETH AND NOTICE OF INTENT TO
Filed	: 03/03/2005	: ISSUE CERTIFICATE OF CORRECTION
		:

The Request for Recalculation is **GRANTED** to the extent indicated.

The patent term adjustment has been determined to be **1159** days. The USPTO will *sua sponte* issue a certificate of correction reflecting the amount of PTA days determined by the recalculation.

Prior to the issuance of the certificate of correction, the USPTO will afford patentee an opportunity to be heard and request reconsideration. Accordingly, patentee has **one month or thirty (30) days**, whichever is longer, to file a request for reconsideration of this patent term adjustment calculation. See 35 U.S.C. 154(b)(3)(B)(ii) and 37 CFR 1.322(a)(4). No extensions of time will be granted under 37 CFR 1.136.

Patentee should use document code PET.OP if electronically filing a request for reconsideration of this patent term adjustment calculation. The patentee must also include the information required by 37 CFR 1.705(b)(2) and the fee required by 37 CFR 1.18(e). If patentee does not file a timely request for reconsideration of this patent term adjustment calculation including the information required by 37 CFR 1.705(b)(2) and the fee required by 37 CFR 1.18(e), the USPTO will issue a certificate of correction reflecting the PTA determination noted above.

Patentee should be aware that in order to preserve the right to review in the United States District Court for the District of Columbia of the USPTO patent term adjustment determination, patentee must ensure that he or she also take the steps required under 35 U.S.C. 154(b)(4)(A) in a timely manner. Nothing in the request for recalculation should be construed as providing an alternative time frame for commencing a civil action under 35 U.S.C. 154(b)(4)(A).

Any questions concerning this decision should be directed to the Office of Patent Legal Administration at 571-272-7702.

UNITED STATES PATENT AND TRADEMARK OFFICE

COMMISSIONER FOR PATENTS
UNITED STATES PATENT AND TRADEMARK OFFICE
P.O. BOX 1450
ALEXANDRIA, VA 22313-1450
www.uspto.gov

Paper No.

AT&T Legal Department - HFZ
ATTN. Patent Docketing
One AT&T Way
Room 2A-207
Bedminstor NJ 07921

COPY MAILED

SEP 04 2009

OFFICE OF PETITIONS

In re Application of	:	
Staub et al.	:	DECISION ON
Application No. 11/071,069	:	PETITION PURSUANT TO
Filed: March 2, 2005	:	37 C.F.R. § 1.182
Attorney Docket No. 20103/A00567-1	:	
Title: METHOD AND SYSTEM OF	:	
CATALOGING AND DETECTING NETWORK	:	
FAULTS	:	

This is in response to the petition pursuant to 37 C.F.R. § 1.182, requesting the withdrawal of a terminal disclaimer, filed on April 29, 2009.

This petition is **DISMISSED**.

On October 16, 2008, Petitioner submitted a terminal disclaimer to overcome a non-statutory double patenting rejection over patent number 6,891,930, in a final Office action mailed November 1, 2007.

Receipt of the petition fee is acknowledged.

With this petition, Petitioner has asserted that the terminal disclaimer was filed in error. This argument has been considered by the Examiner, but has not been deemed to be persuasive. An Office communication from the Examiner has been enclosed with this decision.

Any reply must be submitted within **TWO MONTHS** from the mail date of this decision. Extensions of time under 37 C.F.R. § 1.136(a) are permitted. The reply should include a cover letter entitled

"Renewed Petition pursuant to 37 C.F.R. § 1.182." This is not a final agency action within the meaning of 5 U.S.C § 704.

The renewed petition should indicate in a prominent manner that the attorney handling this matter is Paul Shanoski, and may be submitted by mail,[1] hand-delivery,[2] or facsimile.[3] Registered users of EFS-Web may alternatively submit a response to this decision via EFS-Web.[4]

If responding by mail, Petitioner is advised not to place the undersigned's name on the envelope. Only the information that appears in the footnote should be included - adding anything else to the address will delay the delivery of the response to the undersigned.

Telephone inquiries regarding *this decision* should be directed to the undersigned at (571) 272-3225.[5] All other inquiries concerning examination procedures should be directed to the Technology Center.

Paul Shanoski
Senior Attorney
Office of Petitions

Encl. Office communication

---

1 Mail Stop Petition, Commissioner for Patents, United States Patent and Trademark Office, P.O. Box 1450, Alexandria, VA, 22313-1450.
2 Customer Window, Randolph Building, 401 Dulaney Street, Alexandria, VA, 22314.
3 (571) 273-8300- please note this is a central facsimile number.
4 https://sportal.uspto.gov/authenticate/authenticateuserlocalepf.html
5 Petitioner will note that all practice before the Office should be in writing, and the action of the Office will be based exclusively on the written record in the Office. See 37 C.F.R. § 1.2. As such, Petitioner is reminded that no telephone discussion may be controlling or considered authority for any further action(s) of Petitioner.

UNITED STATES PATENT AND TRADEMARK OFFICE

COMMISSIONER FOR PATENTS
UNITED STATES PATENT AND TRADEMARK OFFICE
P.O. BOX 1450
ALEXANDRIA, VA 22313-1450
www.uspto.gov

Paper No.

WINSTON & STRAWN LLP
PATENT DEPARTMENT
1700 K STREET, N.W.
WASHINGTON DC 20006

COPY MAILED

AUG 26 2009

OFFICE OF PETITIONS

In re Application of :
Rose Anne Jarrett :
Application No. 11/071,077 : ON APPLICATION FOR
Filed: March 3, 2005 : PATENT TERM ADJUSTMENT
Atty Docket No. 105557-4000 :

This is in response to the REQUEST FOR RECONSIDERATION OF PATENT TERM ADJUSTMENT UNDER 37 C.F.R. 1.705(b) filed on March 10, 2009. Applicant submits that the correct patent term adjustment to be indicated on the patent is seven hundred seventy-six (776) days, not four hundred eighty-seven (487) days as calculated by the Office as of the mailing of the initial determination of patent term adjustment. Applicant requests this correction solely on the basis that the Office will take in excess of three years to issue this patent.

As the instant application for patent term adjustment requests reconsideration of the patent term adjustment as it relates to the Office's failure to issue the patent within 3 years of the filing date, the application for patent term adjustment under 37 CFR 1.705(b) is **DISMISSED as PREMATURE**.

Knowledge of the actual date the patent issues is required to calculate the amount, if any, of additional patent term patentee is entitled to for Office failure to issue the patent within 3 years. See § 1.702(b). The computer will not undertake the § 1.702(b) calculation until the actual date of issuance of the patent has been determined. Likewise, the computer will not calculate any further Office delay under § 1.702(a)(4) or applicant delay under § 1.704(c)(10) until the actual date of

issuance of the patent has been determined. As such, the Office can not make a determination on the correctness of the patent term adjustment until the patent has issued.

Requesting reconsideration of the patent term adjustment to be indicated on the patent under 37 CFR 1.705(b) based on the initial determination of patent term adjustment and a projected issuance date of the patent is premature. Accordingly, it is appropriate to dismiss as premature such a request.

Rather than file an application for patent term adjustment under 37 CFR 1.705(b) contesting the 37 CFR 1.702(b) calculation at the time of the mailing of the notice of allowance, applicant is advised that they may wait until the time of the issuance of the patent and file a request for reconsideration of the patent term adjustment pursuant to 37 CFR 1.705(d). As the USPTO does not calculate the amount of time earned pursuant to 37 CFR 1.702(b) until the time of the issuance of the patent, the Office will consider any request for reconsideration of the patent term adjustment due to an error in the calculation of 37 CFR 1.702(b) to be timely if the request for reconsideration is filed within two months of the issuance of the patent. However, as to all other bases for contesting the initial determination of patent term adjustment received with the notice of allowance, applicant must timely file an application for patent term adjustment prior to the payment of the issue fee[1].

The Office acknowledges submission of the $200.00 fee set forth in 37 CFR 1.18(e) for consideration of the application for patent term adjustment under 37 CFR 1.705(b).

Any request for reconsideration of the patent term adjustment indicated on the patent must be timely filed within 2 months after issuance pursuant to 37 CFR 1.705(d) and must include payment of the required fee under 37 CFR 1.18(e).

---

1 For example, if applicant disputes both the calculation of patent term adjustment under 37 CFR 1.702(a)(1) for Office failure to mail a first Office action or notice of allowance not later than fourteen months after the date on which the application was filed and under 37 CFR 1.702(b) for Office failure to issue a patent within three years of the actual filing date of the application, then applicant must still timely file an application for patent term adjustment prior to the payment of the issue fee to contest the calculation of Office delay in issuing a first Office action or notice of allowance. See 37 CFR 1.705(b) and 35 U.S.C. 154(b)(3)(B). A dispute as to the calculation of the §1.702(a)(1) period raised on request for reconsideration of patent term adjustment under 37 CFR 1.705(d) will be dismissed as untimely filed.

The Office of Data Management has been advised of this decision. This application is being referred to the Office of Data Management for issuance of the patent.

Telephone inquiries specific to this decision should be directed to the undersigned at (571) 272-3219.

Olesia Brown P/

Anthony Knight
Supervisor
Office of Petitions

SPE RESPONSE FOR CERTIFICATE OF CORRECTION

Paper No.: _____

DATE : 01/04/10

TO SPE OF : ART UNIT 1794

SUBJECT : Request for Certificate of Correction for Appl. No 11/071077.: 7592030

Please respond to this request for a certificate of correction within 7 days.

FOR IFW FILES:

Please review the requested changes/corrections as shown in the **COCIN** document(s) in the IFW application image. No new matter should be introduced, nor should the scope or meaning of the claims be changed.

Please complete the response (see below) and forward the completed response to scanning using document code **COCX**.

FOR PAPER FILES:

Please review the requested changes/corrections as shown in the attached certificate of correction. Please complete this form (see below) and forward it with the file to:

Certificates of Correction Branch (CofC)

Should the change(s) Be made?

RoChaun Johnson
Certificates of Correction Branch
571 272-0470

Thank You For Your Assistance

The request for issuing the above-identified correction(s) is hereby:
Note your decision on the appropriate box.

❑ **Approved**	**All** changes apply.
xApproved in Part	Specify below which changes **do not** apply.
❑ **Denied**	State the reasons for denial below.

Comments: The amendments to the claims are not approved because no reason is seen to make changes in them.

_____ **SPE** _____ **Art Unit**

11071070

UNITED STATES DEPARTMENT OF COMMERCE
Patent and Trademark Office
ASSISTANT SECRETARY OF COMMERCE AND
COMMISSIONER OF PATENTS AND TRADEMARKS
P.O. BOX 1450
Alexandria, Va 22313- 1450
www.uspto.gov.

DATE: January 6, 2010
Patent No: 7592030
Applicant: Jarrett
Issued: 09/22/09

Request for consideration of Certificate of Correction:

Consideration has been given for your request for the certificate of correction for the above-identified patent under the provisions of Rules 1.322/1.323.

Respecting the alleged errors in the claims are printed in accordance with the record. The Examiner stated the amendment to the claims are not approved because no reason is seen to make changes in them Therefore, no correction(s) are in order here under United States Codes (U.S.C.) 254 Code of Federal Regulation (C.F.R.) 1.322/1.323.

In view of the foregoing, in this matter your request is hereby denied.

RoChaun Johnson for
Mary Diggs, Supervisor
Decisions and Certificates of Correction
(571) 272-0470

WINSTON & STRAWN LLP
PATNET DEPARTMENT
1700 K STREET, NW
WASHINGTON, DC 20006-3817

UNITED STATES PATENT AND TRADEMARK OFFICE

COMMISSIONER FOR PATENTS
UNITED STATES PATENT AND TRADEMARK OFFICE
P.O. BOX 1450
ALEXANDRIA, VA 22313-1450
www.uspto.gov

Paper No.

COPY MAILED
MAR 02 2010

WINSTON & STRAWN LLP
PATENT DEPARTMENT
1700 K STREET, N.W.
WASHINGTON DC 20006

In re Patent No. 7,592,030	: DECISION ON REQUEST
Jarrett	: FOR RECONSIDERATION OF
Issue Date: September 22, 2009	: PATENT TERM ADJUSTMENT
Application No. 11/071,077	: and
Filed: March 3, 2005	: NOTICE OF INTENT TO ISSUE
Atty Docket No. 105557-4000	: CERTIFICATE OF CORRECTION

This is a decision on the petition filed on November 19 2009, which is being treated as a petition under 37 CFR 1.705(d) requesting that the patent term adjustment indicated on the above-identified patent be corrected to indicate that the term of the above-identified patent is extended or adjusted by one thousand and fifty-five (1055) days.

The petition to correct the patent term adjustment indicated on the above-identified patent to indicate that the term of the above-identified patent is extended or adjusted by one thousand and fifty-five (1055) days is **GRANTED**.

The Office acknowledges submission of the $200.00 fee set forth in 37 CFR 1.18(e). No additional fees are required.

The application is being forwarded to the Certificates of Branch for issuance of a certificate of correction. The Office will issue a certificate of correction indicating that the term of the above-identified patent is extended or adjusted by **one thousand and fifty-five (1055) days.**

Telephone inquiries specific to this matter should be directed to Senior Attorney Paul Shanoski at (571) 272-3225.

Nancy Johnson
Senior Petitions Attorney
Office of Petitions

Enclosure: Copy of DRAFT Certificate of Correction

UNITED STATES PATENT AND TRADEMARK OFFICE

CERTIFICATE OF CORRECTION

PATENT : 7,592,030 B2

DATED : **September 22, 2009** **DRAFT**

INVENTOR(S) : **Jarrett**

It is certified that error appears in the above-identified patent and that said Letters Patent is hereby corrected as shown below:

On the cover page,

[*] Notice: Subject to any disclaimer, the term of this patent is extended or adjusted under 35 USC 154(b) by 561 days

Delete the phrase "by 561 days" and insert – by 1055 days --

UNITED STATES PATENT AND TRADEMARK OFFICE

Commissioner for Patents
United States Patent and Trademark Office
P.O. Box 1450
Alexandria, VA 22313-1450
www.uspto.gov

MAY 16 2007

KOS PHARMACEUTICALS, INC.
1 CEDAR BROOK DRIVE
CRANBURY NJ 08512-3618

In re Application of	:
David J. Bova et al	:
Serial No.: 11/071,099	: PETITION DECISION
Filed: January 5, 2005	:
Attorney Docket No.: SD-50006	:

This is in response to the petition under 37 CFR 1.59(b), filed September 8, 2006, to expunge a Proprietary Information Disclosure Statement from the above identified application.

Petitioner requests that documents submitted with the petition as a Proprietary Information Disclosure Statement (PIDS) be expunged from the record. Petitioner states either: (A) that the information contains trade secret material, proprietary material and/or material that is subject to a protective order which has not been made public; or (B) that the information submitted was unintentionally submitted and the failure to obtain its return would cause irreparable harm to the party who submitted the information or to the party in interest on whose behalf the information was submitted, and the information has not otherwise been made public. The petition fee set forth in 37 CFR 1.17(h) has been paid.

The information submitted as proprietary material was not submitted in accordance with M.P.E.P. 724 and may have been available to the public for some time. Proprietary material should be submitted as a separate IDS (not as part of a non-proprietary IDS, as was done here) and should be in a labeled sealed envelope. In this instance the material was scanned into the regular file in IFW and was available to the public until the petition was brought to the attention of the deciding official at which point they were closed to public access. The original documents, since they were scanned, cannot be returned to applicants. The material will remain available to the examiner for consideration. By closing the material to public access the material is effectively expunged and no further petition to expunge will be needed.

The petition is **GRANTED** to the extent indicated.

Should there be any questions with respect to this decision, please contact William R. Dixon, Jr., by mail addressed to: Director, Technology Center 1600, P.O. Box 1450, Alexandria, VA 22313-1450, or by telephone at 571-272-0519 or by facsimile transmission at general Office facsimile number.

Bruce M. Kisliuk
Director, Technology Center 1600

UNITED STATES PATENT AND TRADEMARK OFFICE

Commissioner for Patents
United States Patent and Trademark Office
P.O. Box 1450
Alexandria, VA 22313-1450
www.uspto.gov

COPY MAILED

AUG 1 8 2008

OFFICE OF PETITIONS

BIRCH STEWART KOLASCH & BIRCH
PO BOX 747
FALLS CHURCH VA 22040-0747

In re Application of
Yoshiji Takamura
Application No. 11/071,105
Filed: March 4, 2005
Attorney Docket No. **0717-0507PUS2**

ON PETITION

This is a decision on the petition, filed July 14, 2008 to withdraw the holding of abandonment, which is being treated under 37 CFR 1.181.

The petition under 37 CFR 1.181 is **GRANTED**.

A Final Office Action was mailed November 15, 2007 which set a three month period for response. In response thereof, an Amendment and a Notice of Appeal were filed May 14, 2008, with a three month extension of time request. However, by way of Advisory Action mailed June 10, 2008, petitioner was advised that the response did not place the application in condition for allowance. No further responses having been filed, the application became abandoned May 16, 2008 and a Notice of Abandonment was mailed June 25, 2008.

Petitioner argues that the response filed May 14, 2008 with the three month extension of time was timely and provides as proof, a copy of the postcard receipt date stamped May 14, 2008 to show that the response was timely filed.

A search of the application file and the USPTO records reveals that in fact, even though the amendment did not place the application in condition for allowance, a Notice of Appeal was also filed on May 14, 2008. The Notice of Appeal is a proper response to the Final Office Action.

Accordingly, the response was timely and the Notice of Abandonment mailed June 25, 2008 was mailed in error and is hereby withdrawn. No petition fee is due and none has been charged.

Furthermore, a proper and timely response to the Notice of Appeal is either an Appeal Brief or an RCE, within two months from the filing of the Notice of Appeal.
A review of the file reveals that instead of filing an Appeal Brief by July 14, 2008, on July 14, 2008, petitioners filed an RCE in response to the Notice of Appeal.

This matter is being referred to Technology Center 2813 for processing the RCE filed July 14, 2008.

Telephone inquiries concerning this matter may be directed to the undersigned Petitions Attorney at (571) 272-3212.

Patricia Faison-Ball

Patricia Faison-Ball
Senior Petitions Attorney
Office of Petitions

SPE RESPONSE FOR CERTIFICATE OF CORRECTION

DATE : 1/19/2010

Paper No.: _____

TO SPE OF : ART UNIT 1795

SUBJECT : Request for Certificate of Correction for Appl. No.: 11/671112 Patent No.: 7569292 B2

Please respond to this request for a certificate of correction within 7 days.

FOR IFW FILES:

Please review the requested changes/corrections as shown in the **COCIN** document(s) in the IFW application image. No new matter should be introduced, nor should the scope or meaning of the claims be changed.

Please complete the response (see below) and forward the completed response to scanning using document code **COCX**.

FOR PAPER FILES:

Please review the requested changes/corrections as shown in the attached certificate of correction. Please complete this form (see below) and forward it with the file to:

Certificates of Correction Branch (CofC)
Randolph Square – 9D10-A
Palm Location 7580

Virginia Tolbert
Certificates of Correction Branch
571-272-0460

Thank You For Your Assistance

The request for issuing the above-identified correction(s) is hereby:
Note your decision on the appropriate box.

- [X] **Approved** — **All** changes apply.
- [ ] **Approved in Part** — Specify below which changes **do not** apply.
- [ ] **Denied** — State the reasons for denial below.

Comments: _____

/Jane Rhee/ 1/30/10

SPE RESPONSE FOR CERTIFICATE OF CORRECTION

DATE : 1/19/2010 **Paper No.:** ____

TO SPE OF : ART UNIT 1795 Dah-Wei Yuan

SUBJECT : Request for Certificate of Correction for Appl. No.: 11/671112 Patent No.: 7569292 B2

Please respond to this request for a certificate of correction within 7 days.

FOR IFW FILES:

Please review the requested changes/corrections as shown in the **COCIN** document(s) in the IFW application image. No new matter should be introduced, nor should the scope or meaning of the claims be changed.

Please complete the response (see below) and forward the completed response to scanning using document code **COCX**.

FOR PAPER FILES:

Please review the requested changes/corrections as shown in the attached certificate of correction. Please complete this form (see below) and forward it with the file to:

Certificates of Correction Branch (CofC)
Randolph Square – 9D10-A
Palm Location 7580

Virginia Tolbert
Certificates of Correction Branch
571-272-0460

Thank You For Your Assistance

The request for issuing the above-identified correction(s) is hereby:
Note your decision on the appropriate box.

- [x] **Approved** — **All** changes apply.
- [ ] **Approved in Part** — Specify below which changes **do not** apply.
- [ ] **Denied** — State the reasons for denial below.

Comments: _____

UNITED STATES PATENT AND TRADEMARK OFFICE

COMMISSIONER FOR PATENTS
UNITED STATES PATENT AND TRADEMARK OFFICE
P.O. BOX 1450
ALEXANDRIA, VA 22313-1450
www.uspto.gov

WESTERMAN, HATTORI, DANIELS & ADRIAN, LLP
1250 CONNECTICUT AVENUE, NW
SUITE 700
WASHINGTON, DC 20036

COPY MAILED

AUG 09 2005

OFFICE OF PETITIONS

In re Application of :
Satoh, et al. : ON PETITION
Application No. 11/071,119 :
Filed: March 4, 2005 :
Docket No.: 031030A :

The above-identified application has been referred to the Office of Petitions in regards to the "RESPONSE TO NOTICE OF OMITTED ITEM(S)," filed May 24, 2005. This matter is being treated as a petition to accord the application a filing date of March 4, 2005 and have pages 65, 69, and 72 of the specification considered part of the application papers as originally filed.

The petition is hereby **GRANTED**.

The application was filed March 4, 2005. On April 26, 2005, a Notice of Omitted Items in a Incomplete Nonprovisional Application was mailed indicating that the application had been accorded a filing date but that pages 65, 69, and 72 of the specification appeared to have been omitted from the application papers as filed.

The Notice permitted applicant to either: (1) promptly establish prior receipt in the PTO of the omitted items at issue (generally by way of a date-stamped postcard receipt (MPEP 503)), or (2) promptly submit the omitted drawing(s) in a nonprovisional application and accept the date of such submission as the application filing date. An applicant asserting that the items in question were in fact deposited in the PTO with the application papers must file a petition (and the appropriate petition fee) with evidence of such deposit. An applicant desiring to submit the omitted items and accept the date of such submission as the application filing date must file any omitted items with an oath or declaration in compliance with 37 CFR 1.63 and 1.64 referring to such items and a petition under 37 CFR 1.182 (with the petition fee under 37 CFR 1.17(h)) requesting the later filing date within two months of the date of the Notice (37 CFR 1.181(f)).

In response to the Notice, petitioner asserts that the application as filed included pages 65, 69, and 72 of the specification and has included as proof of submission and receipt of the referenced pages a copy of a stamped receipt acknowledging USPTO receipt of 119 sheets of specification, among other items.

The arguments and evidence submitted by petitioner have been considered and found persuasive. Accordingly, the Notice mailed April 26, 2005 is hereby **WITHDRAWN** and the petition to accord the application a filing date of March 4, 2005 is **GRANTED**.

Since the original pages 65, 69, and 72 of the specification cannot be located in the Office, the copy supplied with the instant petition will be used for examination purposes.

No petition fee is due in connection with this matter.

This application is being forwarded to the Office of Initial Patent Examination for further processing with a filing date of March 4, 2005 with pages 65, 69, and 72 of the specification as part of the application as filed.

Telephone inquiries related to this decision may be directed to the undersigned at (571) 272-3205.

Alesia M. Brown
Petitions Attorney
Office of Petitions

UNITED STATES PATENT AND TRADEMARK OFFICE

COMMISSIONER FOR PATENTS
UNITED STATES PATENT AND TRADEMARK OFFICE
P.O. BOX 1450
ALEXANDRIA, VA 22313-1450
www.uspto.gov

MINTZ, LEVIN, COHN, FERRIS, GLOVSKY
AND POPEO, P.C.
ONE FINANCIAL CENTER
BOSTON, MA 02111

COPY MAILED
AUG 16 2006
OFFICE OF PETITIONS

In re Application of	:	
Seth S. Kessler, et al.	:	
Application No. 11/071,129	:	DECISION ON PETITION
Filed: March 3, 2005	:	UNDER 37 CFR 1.78(a)(6)
Attorney Docket No. 28955-015	:	

This is a decision on the petition under 37 CFR 1.78(a)(6), filed May 18, 2006, to accept an unintentionally delayed claim under 35 U.S.C. §119(e) for the benefit of a prior-filed provisional application set forth in the concurrently filed amendment.

The petition is **DISMISSED.**

A petition under 37 CFR 1.78(a)(6) is only applicable to those applications filed on or after November 29, 2000. Further, the petition is appropriate only after expiration of the period specified in 37 CFR 1.78(a)(5)(ii) and must be filed during the pendency of the nonprovisional application. In addition, the petition must be accompanied by:

(1) the reference required by 35 U.S.C. § 119(e) and 37 CFR 1.78(a)(5)(i) to the prior-filed application, unless previously submitted;
(2) the surcharge set forth in § 1.17(t); and
(3) a statement that the entire delay between the date the claim was due under 37 CFR 1.78(a)(5)(ii) and the date the claim was filed was unintentional. The Director may require additional information where there is a question whether the delay was unintentional.

This pending nonprovisional application was filed on March 3, 2005, within twelve months of the filing date of the prior-filed provisional application, Application No. 60/549,668, which was filed on March 3, 2004, and for which priority is claimed. A reference to the prior-filed provisional application has been included in an amendment to the first sentence of the specification following the title.

However, the amendment is not acceptable as drafted since it improperly incorporates by reference the prior-filed application. An incorporation by reference statement added after an application's filing date is not effective because no new matter can be added to an application after its filing date (*see* 35 U.S.C. § 132(a)). If an incorporation by reference statement is included in an amendment to the specification to add a benefit claim under 35 U.S.C. § 120 after the filing date of the application, the amendment would not be proper. When a benefit claim under 35 U.S.C. § 120 is submitted after the filing of an application, the reference to the prior application cannot include an incorporation by reference statement of the prior application. *See* Dart Industries v. Banner, 636 F.2d 684, 207 USPQ 273 (C.A.D.C. 1980). *Note* MPEP §§ 201.06(c) and 608.04(b).

Accordingly, before the petition under 37 CFR 1.78(a)(6) can be granted, a renewed petition under 37 CFR 1.78(a)(6) and either an Application Data Sheet or a substitute amendment (complying with 37 CFR 1.121 and 37 CFR 1.76(b)(5)) deleting the incorporation by reference statement, are required.

Further correspondence with respect to this matter should be addressed as follows:

By mail: Mail Stop PETITIONS
Commissioner for Patents
Post Office Box 1450
Alexandria, VA 22313-1450

By hand: Customer Service Window
Mail Stop Petitions
Randolph Building
401 Dulany Street
Alexandria, VA 22314

By fax: (571) 273-8300
ATTN: Office of Petitions

Any inquiries concerning this decision may be directed to Sherry D. Brinkley at (571) 272-3204.

Sherry D. Brinkley
Petitions Examiner
Office of Petitions

Frances M. Hicks
Petitions Examiner
Office of Petitions

UNITED STATES PATENT AND TRADEMARK OFFICE

COMMISSIONER FOR PATENTS
UNITED STATES PATENT AND TRADEMARK OFFICE
P.O. BOX 1450
ALEXANDRIA, VA 22313-1450
www.uspto.gov

MINTZ, LEVIN, COHN, FERRIS, GLOVSKY
AND POPEO, P.C.
ONE FINANCIAL CENTER
BOSTON, MA 02111

COPY MAILED
DEC 0 1 2006
OFFICE OF PETITIONS

In re Application of	:	
Seth S. Kessler, et al.	:	
Application No. 11/071,129	:	DECISION ON PETITION
Filed: March 3, 2005	:	UNDER 37 CFR 1.78(a)(6)
Attorney Docket No. 28955-015	:	

This is a decision on the renewed petition under 37 CFR 1.78(a)(6), filed October 13, 2006, to accept an unintentionally delayed claim under 35 U.S.C. §119(e) for the benefit of a prior-filed provisional application set forth in the concurrently filed amendment.

The petition is **GRANTED.**

A petition under 37 CFR 1.78(a)(6) is only applicable to those applications filed on or after November 29, 2000. Further, the petition is appropriate only after expiration of the period specified in 37 CFR 1.78(a)(5)(ii) and must be filed during the pendency of the nonprovisional application. In addition, the petition must be accompanied by:

(1) the reference required by 35 U.S.C. § 119(e) and 37 CFR 1.78(a)(5)(i) to the prior-filed application, unless previously submitted;
(2) the surcharge set forth in § 1.17(t); and
(3) a statement that the entire delay between the date the claim was due under 37 CFR 1.78(a)(5)(ii) and the date the claim was filed was unintentional. The Director may require additional information where there is a question whether the delay was unintentional.

Additionally, the instant nonprovisional application must be pending at the time of filing of the reference to the prior-filed provisional application as required by 37 CFR 1.78(a)(5)(ii). Further, the nonprovisional application claiming the benefit of the prior-filed provisional application must have been filed within twelve months of the filing date of the prior-filed provisional application.

All of the above requirements having been satisfied, the late claim for priority under 35 U.S.C. § 119(e) is accepted as being unintentionally delayed.

The granting of the petition to accept the delayed benefit claim to the prior-filed application under 37 CFR 1.78(a)(6) should not be construed as meaning that this application is entitled to the benefit of the filing date of the prior-filed application. In order for this application to be entitled to the benefit of the prior-filed application, all other requirements under 35 U.S.C. §119(e) and 37 CFR 1.78(a)(4) and (a)(5) must be met. Similarly, the fact that the corrected Filing Receipt accompanying this decision on petition includes the prior-filed application should not be construed as meaning that applicant is entitled to the claim for benefit of priority to the prior-filed application noted thereon. Accordingly, the examiner will, in due course, consider this benefit claim and determine whether the application is entitled to the benefit of the earlier filing date.

It is noted that the requisite surcharge set forth in § 1.17(t) was submitted with the petition under 37 CFR 1.78(a)(6) filed on May 18, 2006. Since no surcharge is required for the renewed petition, the $1,370 surcharge paid on October 13, 2006 is being credited to counsel's deposit account.

A corrected Filing Receipt, which includes the priority claim to the prior-filed provisional application, accompanies this decision on petition.

Any inquiries concerning this decision may be directed to Sherry D. Brinkley at (571) 272-3204. All other inquiries concerning either the examination procedures or status of the application should be directed to the Technology Center.

The application is being forwarded to Technology Center AU 2863 for consideration by the examiner of the claim under 35 U.S.C. §119(e) for the benefit of priority to the prior-filed provisional application.

Sherry D. Brinkley
Petitions Examiner
Office of Petitions

Frances M. Hicks
Petitions Examiner
Office of Petitions

ATTACHMENT: Corrected Filing Receipt

UNITED STATES PATENT AND TRADEMARK OFFICE

UNITED STATES DEPARTMENT OF COMMERCE
United States Patent and Trademark Office
Address: COMMISSIONER FOR PATENTS
P.O. Box 1450
Alexandria, Virginia 22313-1450
www.uspto.gov

APPL NO.	FILING OR 371 (c) DATE	ART UNIT	FIL FEE REC'D	ATTY.DOCKET NO	DRAWINGS	TOT CLMS	IND CLMS
11/071,129	03/03/2005	2863	1200	28955-015	8	16	1

CONFIRMATION NO. 5502
CORRECTED FILING RECEIPT
OC000000021403541
OC000000021403541

30623
MINTZ, LEVIN, COHN, FERRIS, GLOVSKY
AND POPEO, P.C.
ONE FINANCIAL CENTER
BOSTON, MA 02111

Date Mailed: 11/29/2006

Receipt is acknowledged of this regular Patent Application. It will be considered in its order and you will be notified as to the results of the examination. Be sure to provide the U.S. APPLICATION NUMBER, FILING DATE, NAME OF APPLICANT, and TITLE OF INVENTION when inquiring about this application. Fees transmitted by check or draft are subject to collection. Please verify the accuracy of the data presented on this receipt. **If an error is noted on this Filing Receipt, please mail to the Commissioner for Patents P.O. Box 1450 Alexandria Va 22313-1450. Please provide a copy of this Filing Receipt with the changes noted thereon. If you received a "Notice to File Missing Parts" for this application, please submit any corrections to this Filing Receipt with your reply to the Notice. When the USPTO processes the reply to the Notice, the USPTO will generate another Filing Receipt incorporating the requested corrections (if appropriate).**

Applicant(s)

Seth S. Kessler, Brookline, MA;
Kristin A. Jugenheimer, Cambridge, MA;
Aaron B. Size, Cambridge, MA;

Power of Attorney: The patent practitioners associated with Customer Number **30623**.

Domestic Priority data as claimed by applicant

This appln claims benefit of 60/549,668 03/03/2004
and claims benefit of 60/616,748 10/07/2004
and claims benefit of 60/616,705 10/07/2004

Foreign Applications

If Required, Foreign Filing License Granted: 05/05/2005

The country code and number of your priority application, to be used for filing abroad under the Paris Convention, is
US11/071,129

Projected Publication Date: Not Applicable

Non-Publication Request: No

Early Publication Request: No

Title

Sensor infrastructure

Preliminary Class

702

PROTECTING YOUR INVENTION OUTSIDE THE UNITED STATES

Since the rights granted by a U.S. patent extend only throughout the territory of the United States and have no effect in a foreign country, an inventor who wishes patent protection in another country must apply for a patent in a specific country or in regional patent offices. Applicants may wish to consider the filing of an international application under the Patent Cooperation Treaty (PCT). An international (PCT) application generally has the same effect as a regular national patent application in each PCT-member country. The PCT process **simplifies** the filing of patent applications on the same invention in member countries, but **does not result** in a grant of "an international patent" and does not eliminate the need of applicants to file additional documents and fees in countries where patent protection is desired.

Almost every country has its own patent law, and a person desiring a patent in a particular country must make an application for patent in that country in accordance with its particular laws. Since the laws of many countries differ in various respects from the patent law of the United States, applicants are advised to seek guidance from specific foreign countries to ensure that patent rights are not lost prematurely.

Applicants also are advised that in the case of inventions made in the United States, the Director of the USPTO must issue a license before applicants can apply for a patent in a foreign country. The filing of a U.S. patent application serves as a request for a foreign filing license. The application's filing receipt contains further information and guidance as to the status of applicant's license for foreign filing.

Applicants may wish to consult the USPTO booklet, "General Information Concerning Patents" (specifically, the section entitled "Treaties and Foreign Patents") for more information on timeframes and deadlines for filing foreign patent applications. The guide is available either by contacting the USPTO Contact Center at 800-786-9199, or it can be viewed on the USPTO website at http://www.uspto.gov/web/offices/pac/doc/general/index.html.

For information on preventing theft of your intellectual property (patents, trademarks and copyrights), you may wish to consult the U.S. Government website, http://www.stopfakes.gov. Part of a Department of Commerce initiative, this website includes self-help "toolkits" giving innovators guidance on how to protect intellectual property in specific countries such as China, Korea and Mexico. For questions regarding patent enforcement issues, applicants may call the U.S. Government hotline at 1-866-999-HALT (1-866-999-4158).

LICENSE FOR FOREIGN FILING UNDER
Title 35, United States Code, Section 184
Title 37, Code of Federal Regulations, 5.11 & 5.15

GRANTED

The applicant has been granted a license under 35 U.S.C. 184, if the phrase "IF REQUIRED, FOREIGN FILING LICENSE GRANTED" followed by a date appears on this form. Such licenses are issued in all applications where the conditions for issuance of a license have been met, regardless of whether or not a license may be required as set forth in 37 CFR 5.15. The scope and limitations of this license are set forth in 37 CFR 5.15(a) unless an earlier license has been issued under 37 CFR 5.15 (b). The license is subject to revocation upon written notification. The date indicated is the effective date of the license, unless an earlier license of similar scope has been granted under 37 CFR 5.13 or 5.14.

This license is to be retained by the licensee and may be used at any time on or after the effective date thereof unless it is revoked. This license is automatically transferred to any related applications(s) filed under 37 CFR 1.53(d). This license is not retroactive.

The grant of a license does not in any way lessen the responsibility of a licensee for the security of the subject matter as imposed by any Government contract or the provisions of existing laws relating to espionage and the national security or the export of technical data. Licensees should apprise themselves of current regulations especially with respect to certain countries, of other agencies, particularly the Office of Defense Trade Controls, Department of State (with respect to Arms, Munitions and Implements

of War (22 CFR 121-128)); the Bureau of Industry and Security, Department of Commerce (15 CFR parts 730-774); the Office of Foreign Assets Control, Department of Treasury (31 CFR Parts 500+) and the Department of Energy.

NOT GRANTED

No license under 35 U.S.C. 184 has been granted at this time, if the phrase "IF REQUIRED, FOREIGN FILING LICENSE GRANTED" DOES NOT appear on this form. Applicant may still petition for a license under 37 CFR 5.12, if a license is desired before the expiration of 6 months from the filing date of the application. If 6 months has lapsed from the filing date of this application and the licensee has not received any indication of a secrecy order under 35 U.S.C. 181, the licensee may foreign file the application pursuant to 37 CFR 5.15(b).

UNITED STATES PATENT AND TRADEMARK OFFICE

Commissioner for Patents
United States Patent and Trademark Office
P.O. Box 1450
Alexandria, VA 22313-1450
www.uspto.gov

STRATEGIC PATENTS P.C.
C/O PORTFOLIOIP
P.O. BOX 52050
MINNEAPOLIS, MN 55402

MAILED

APR 2 1 2010

OFFICE OF PETITIONS

In re Application of	:	
Terrance Riedel et al	:	
Application No. 11/071,132	:	DECISION ON PETITION
Filed: March 2, 2005	:	
Attorney Docket No. ENGA-0012-P01	:	

This is a decision on the petition under 37 CFR 1.182, filed, February 18, 2010, to change the name of the first named inventor "Tod Riedel" to – Terrance Riedel --.

The petition is **GRANTED**.

Office records have been updated to reflect the inventor's change of name. A corrected Filing Receipt, which reflects the inventor's change of name, accompanies this decision on petition.

Any questions concerning this matter may be directed to Irvin Dingle at (571) 272-3210.

Any questions concerning the examination procedures or status of the application should be directed to the Technology Center.

Irvin Dingle
Petition Examiner
Office of Petitions

Attachment: Corrected Filing Receipt

UNITED STATES PATENT AND TRADEMARK OFFICE

UNITED STATES DEPARTMENT OF COMMERCE
United States Patent and Trademark Office
Address: COMMISSIONER FOR PATENTS
P.O. Box 1450
Alexandria, Virginia 22313-1450
www.uspto.gov

APPLICATION NUMBER	FILING or 371(c) DATE	GRP ART UNIT	FIL FEE REC'D	ATTY.DOCKET.NO	TOT CLAIMS	IND CLAIMS
11/071,132	03/02/2005	2612	1365	ENGA-0012-P01	36	4

CONFIRMATION NO. 5516

CORRECTED FILING RECEIPT

43520
STRATEGIC PATENTS P.C..
C/O PORTFOLIOIP
P.O. BOX 52050
MINNEAPOLIS, MN 55402

OC000000041192704

Date Mailed: 04/20/2010

Receipt is acknowledged of this non-provisional patent application. The application will be taken up for examination in due course. Applicant will be notified as to the results of the examination. Any correspondence concerning the application must include the following identification information: the U.S. APPLICATION NUMBER, FILING DATE, NAME OF APPLICANT, and TITLE OF INVENTION. Fees transmitted by check or draft are subject to collection. Please verify the accuracy of the data presented on this receipt. **If an error is noted on this Filing Receipt, please submit a written request for a Filing Receipt Correction. Please provide a copy of this Filing Receipt with the changes noted thereon. If you received a "Notice to File Missing Parts" for this application, please submit any corrections to this Filing Receipt with your reply to the Notice. When the USPTO processes the reply to the Notice, the USPTO will generate another Filing Receipt incorporating the requested corrections**

Applicant(s)

Terrance Riedel, Hingham, MA;
Brendan T. McSheffrey, Newton, MA;

Power of Attorney: The patent practitioners associated with Customer Number 43520

Domestic Priority data as claimed by applicant

This application is a CIP of 10/863,668 06/08/2004 PAT 7,271,704
which is a CIP of 10/614,948 07/08/2003 ABN
and is a CIP of 10/782,288 02/19/2004 PAT 7,174,769
and said 10/614,948 07/08/2003
is a CIP of 10/274,606 10/21/2002 PAT 7,188,679
which is a CIP of 09/832,531 04/11/2001 PAT 6,585,055
which is a CIP of 09/212,121 12/15/1998 PAT 6,302,218
which is a CON of 08/879,445 06/20/1997 PAT 5,848,651
which is a CIP of 08/590,411 01/23/1996 PAT 5,775,430
and is a CIP of PCT/US97/01025 01/23/1997
and said 10/782,288 02/19/2004
is a CIP of 10/274,606 10/21/2002 PAT 7,188,679
which is a CIP of 09/832,531 04/11/2001 PAT 6,585,055
which is a CIP of 09/212,121 12/15/1998 PAT 6,302,218
which is a CON of 08/879,445 06/20/1997 PAT 5,848,651
which is a CIP of 08/590,411 01/23/1996 PAT 5,775,430
and is a CIP of PCT/US97/01025 01/23/1997

Foreign Applications

If Required, Foreign Filing License Granted: 03/23/2005

The country code and number of your priority application, to be used for filing abroad under the Paris Convention, is **US 11/071,132**

Projected Publication Date: Not Applicable

Non-Publication Request: No

Early Publication Request: No
**** SMALL ENTITY ****
Title

REMOTE MONITORING

Preliminary Class

340

PROTECTING YOUR INVENTION OUTSIDE THE UNITED STATES

Since the rights granted by a U.S. patent extend only throughout the territory of the United States and have no effect in a foreign country, an inventor who wishes patent protection in another country must apply for a patent in a specific country or in regional patent offices. Applicants may wish to consider the filing of an international application under the Patent Cooperation Treaty (PCT). An international (PCT) application generally has the same effect as a regular national patent application in each PCT-member country. The PCT process **simplifies** the filing of patent applications on the same invention in member countries, but **does not result** in a grant of "an international patent" and does not eliminate the need of applicants to file additional documents and fees in countries where patent protection is desired.

Almost every country has its own patent law, and a person desiring a patent in a particular country must make an application for patent in that country in accordance with its particular laws. Since the laws of many countries differ in various respects from the patent law of the United States, applicants are advised to seek guidance from specific foreign countries to ensure that patent rights are not lost prematurely.

Applicants also are advised that in the case of inventions made in the United States, the Director of the USPTO must issue a license before applicants can apply for a patent in a foreign country. The filing of a U.S. patent application serves as a request for a foreign filing license. The application's filing receipt contains further information and guidance as to the status of applicant's license for foreign filing.

Applicants may wish to consult the USPTO booklet, "General Information Concerning Patents" (specifically, the section entitled "Treaties and Foreign Patents") for more information on timeframes and deadlines for filing foreign patent applications. The guide is available either by contacting the USPTO Contact Center at 800-786-9199, or it can be viewed on the USPTO website at http://www.uspto.gov/web/offices/pac/doc/general/index.html.

For information on preventing theft of your intellectual property (patents, trademarks and copyrights), you may wish to consult the U.S. Government website, http://www.stopfakes.gov. Part of a Department of Commerce initiative, this website includes self-help "toolkits" giving innovators guidance on how to protect intellectual property in specific countries such as China, Korea and Mexico. For questions regarding patent enforcement issues, applicants may call the U.S. Government hotline at 1-866-999-HALT (1-866-999-4158).

LICENSE FOR FOREIGN FILING UNDER

Title 35, United States Code, Section 184

Title 37, Code of Federal Regulations, 5.11 & 5.15

GRANTED

The applicant has been granted a license under 35 U.S.C. 184, if the phrase "IF REQUIRED, FOREIGN FILING LICENSE GRANTED" followed by a date appears on this form. Such licenses are issued in all applications where the conditions for issuance of a license have been met, regardless of whether or not a license may be required as set forth in 37 CFR 5.15. The scope and limitations of this license are set forth in 37 CFR 5.15(a) unless an earlier license has been issued under 37 CFR 5.15(b). The license is subject to revocation upon written notification. The date indicated is the effective date of the license, unless an earlier license of similar scope has been granted under 37 CFR 5.13 or 5.14.

This license is to be retained by the licensee and may be used at any time on or after the effective date thereof unless it is revoked. This license is automatically transferred to any related applications(s) filed under 37 CFR 1.53(d). This license is not retroactive.

The grant of a license does not in any way lessen the responsibility of a licensee for the security of the subject matter as imposed by any Government contract or the provisions of existing laws relating to espionage and the national security or the export of technical data. Licensees should apprise themselves of current regulations especially with respect to certain countries, of other agencies, particularly the Office of Defense Trade Controls, Department of State (with respect to Arms, Munitions and Implements of War (22 CFR 121-128)); the Bureau of Industry and Security, Department of Commerce (15 CFR parts 730-774); the Office of Foreign AssetsControl, Department of Treasury (31 CFR Parts 500+) and the Department of Energy.

NOT GRANTED

No license under 35 U.S.C. 184 has been granted at this time, if the phrase "IF REQUIRED, FOREIGN FILING LICENSE GRANTED" DOES NOT appear on this form. Applicant may still petition for a license under 37 CFR 5.12, if a license is desired before the expiration of 6 months from the filing date of the application. If 6 months has lapsed from the filing date of this application and the licensee has not received any indication of a secrecy order under 35 U.S.C. 181, the licensee may foreign file the application pursuant to 37 CFR 5.15(b).

UNITED STATES PATENT AND TRADEMARK OFFICE

Commissioner for Patents
United States Patent and Trademark Office
P.O. Box 1450
Alexandria, VA 22313-1450
www.uspto.gov

WILLIAM D. BRENEMAN, Esq.
BRENEMAN & GEORGES
3150 COMMONWEALTH AVENUE
ALEXANDRIA, VA 22305

MAILED

MAR 05 2009

OFFICE OF PETITIONS

In re Application of :
Hans-Juergen **KRAFFZIK** :
Application No. 11/071,193 :
Filed: March 4, 2005 :
Attorney Docket No. **A5487** :

DECISION ON PETITION
UNDER 37 CFR 1.313(a)

This is a decision on the petition under 37 CFR 1.313(a), filed February 17, 2009, to withdraw the above-identified application from issue.

The petition is **DISMISSED**.

Petitioner requests that the present application be withdrawn from issue for consideration of prior art received on November 24, 2008.

37 CFR 1.313(a) states, in part:

> Applications may be withdrawn from issue for further action at the initiative of the Office or upon petition by the applicant. To request that the Office withdraw an application from issue, applicant must file a petition under this section including the fee set forth in § 1.17(h) and a showing of good and sufficient reasons why withdrawal of the application from issue is necessary.

As such, a grantable petition requesting withdrawal of an application from issue must be accompanied by: (1) a showing of good and sufficient reasons why withdrawal of the application from issue is necessary; and (2) the requisite petition fee under 37 CFR 1.17(h). The petition fee of $130 has been charged to petitioner's deposit account.

However, the petition does not set forth good and sufficient reasons as to why withdrawal of the application from issue is necessary. The mere submission of prior art with the petition does not make withdrawal of the application from issue necessary. There are other avenues open to applicant to have prior art considered other than by way of petition.

Following the part of 37 CFR 1.313(a) cited above, 37 CFR 1.313(a) goes on to state:

> A petition under this section is not required if a request for continued examination under § 1.114 is filed prior to payment of the issue fee.

The filing of a request for continued examination (RCE) under 37 CFR 1.114 with a submission and the fee set forth in 37 CFR 1.17(e) would have been a proper available option to have the prior art considered. It is well documented that an IDS satisfies the submission requirement under 37 CFR 1.114. *See* MPEP 706.07(h)(II).

For the above reasons, this application will not be withdrawn from issue under the provisions of 37 CFR 1.313(a).

Further correspondence with respect to this matter should be addressed as follows:

By mail: Mail Stop PETITIONS
Commissioner for Patents
Post Office Box 1450
Alexandria, VA 22313-1450

By hand: Customer Service Window
Mail Stop Petitions
Randolph Building
401 Dulany Street
Alexandria, VA 22314

By fax: **(571) 273-0025**
Office of Petitions

Any questions concerning this matter may be directed to the undersigned at (571) 272-7253.

/Monica A. Graves/
Petitions Examiner, Office of Petitions

UNITED STATES PATENT AND TRADEMARK OFFICE

Commissioner for Patents
United States Patent and Trademark Office
P.O. Box 1450
Alexandria, VA 22313-1450
www.uspto.gov

WILLIAM D. BRENEMAN, ESQ.
BRENEMAN & GEORGES
3150 COMMONWEALTH AVENUE
ALEXANDRIA, VA 22305

MAILED

MAR 25 2009

OFFICE OF PETITIONS

In re Application of	:	
Hans-Juergen **KRAFFZIK**	:	
Application No. 11/071,193	:	DECISON ON PETITION
Filed: March 4, 2005	:	UNDER 37 CFR 1.313(a)
Attorney Docket No. **A5487**	:	

This is a decision on the renewed petition under 37 CFR 1.313(a), filed March 12, 2009, to withdraw the above-identified application from issue.

The petition is **DISMISSED**.

Petitioner requests that the present application be withdrawn from issue for consideration of prior art filed on November 24, 2008. However, no prior art or Information Disclosure Statement (IDS) was submitted.

37 CFR 1.313(a) states, in part:

> Applications may be withdrawn from issue for further action at the initiative of the Office or upon petition by the applicant. To request that the Office withdraw an application from issue, applicant must file a petition under this section including the fee set forth in § 1.17(h) and a showing of good and sufficient reasons why withdrawal of the application from issue is necessary.

As such, a grantable petition requesting withdrawal of an application from issue must be accompanied by: (1) a showing of good and sufficient reasons why withdrawal of the application from issue is necessary; and (2) the requisite petition fee under 37 CFR 1.17(h). The petition fee of $130 has been processed.

However, the petition does not set forth good and sufficient reasons as to why withdrawal of the application from issue is necessary. The mere indication or mention of prior art does not make withdrawal of the application from issue necessary. There are other avenues open to applicant to have prior art considered other than by way of petition.

Following the part of 37 CFR 1.313(a) cited above, 37 CFR 1.313(a) goes on to state:

> A petition under this section is not required if a request for continued examination under § 1.114 is filed prior to payment of the issue fee.

The filing of a request for continued examination (RCE) under 37 CFR 1.114 with a submission and the fee set forth in 37 CFR 1.17(e) would have been a proper available option to have an IDS considered. It is well documented that an IDS satisfies the submission requirement under 37 CFR 1.114. *See* MPEP 706.07(h)(II).

Petitioner states in his request on February 17, 2009, "... on November 24, 2008 the European Patent Office mailed a search report that included additional prior art references...it was discovered most references were cumulative but that one reference might be more pertinent and should be considered..." however, petitioner failed to provide such reference.

Petitioner goes on to state in his March 12, 2009 request that the Office charged the $130 petition fee twice. The filed record discloses that the check submitted on February 17, 2009 was processed on February 18, 2009 and that no other petition fee has been processed or charged to petitioner.

For the above reasons, this application will not be withdrawn from issue under the provisions of 37 CFR 1.313(a).

Any inquiries regarding this decision should be directed to the undersigned at (571) 272-7253.

/Monica A. Graves/
Petitions Examiner, Office of Petitions

UNITED STATES PATENT AND TRADEMARK OFFICE

UNITED STATES DEPARTMENT OF COMMERCE
United States Patent and Trademark Office
Address: COMMISSIONER FOR PATENTS
P.O. Box 1450
Alexandria, Virginia 22313-1450
www.uspto.gov

APPLICATION NO.	FILING DATE	FIRST NAMED INVENTOR	ATTORNEY DOCKET NO.	CONFIRMATION NO.
11/071,231	03/04/2005	Masashi Enomoto	267118US6	4004

7590 04/22/2008
OBLON, SPIVAK, MCCLELLAND MAIER & NEUSTADT, P.C.
1940 DUKE STREET
ALEXANDRIA, VA 22314

EXAMINER
MULVANEY, ELIZABETH EVANS

ART UNIT	PAPER NUMBER
1794	

NOTIFICATION DATE	DELIVERY MODE
04/22/2008	ELECTRONIC

DECISION GRANTING PETITION UNDER 37 CFR 1.138(d)

The declaration of express abandonment is recognized

This is in response to the petition under 37 CFR 1.138(d), requesting for a refund of any previously paid search fee and excess claims fee in the above-identified application.

The petition is granted.

The express abandonment is recognized. Any previously paid search fee and excess claims fee are hereby refunded.

Telephone inquiries should be directed to the Office of Data Management at (571) 272-4200.

Naomi Farmer

Patent Publication Branch
Office of Data Management

Adjustment date: 04/23/2008 DTERRY
03/08/2005 MBELETE1 00000060 11071231
03 FC:1111 -500.00 DP
05 FC:1202 -800.00 DP

FORM PET651G (Rev. 08/07)

UNITED STATES PATENT AND TRADEMARK OFFICE

Commissioner for Patents
United States Patent and Trademark Office
P.O. Box 1450
Alexandria, VA 22313-1450
www.uspto.gov

MAIL

FEB 03 2006

DIRECTOR OFFICE
TECHNOLOGY CENTER 2600

LACASSE & ASSOCIATES, LLC
1725 DUKE STREET
SUITE 650
ALEXANDRIA VA 22314

In re Application of
CIVANLAR, SEYHAN, et al.
Application No. 11/071,233
Filed: March 4, 2005
For: **SIP2 MOBILE GATEWAY**

DECISION ON PETITION
TO MAKE SPECIAL

This is a decision on the petition filed December 23, 2005 under Manual of Patent Examination Procedure §708.02, VIII requesting accelerated examination.

The petition under Manual of Patent Examination Procedure §708.02, VIII, must:
(1) be filed prior to receiving any examination by the examiner,
(2) be accompanied by the required fee- $130,
(3) the claims should be directed to a single invention (if it is determined that the claims pertain to more than one invention, then applicant will have to make an election without traverse or forfeit accelerated examination status),
(4) state that a pre-examination search was made, and fully discuss the search method employed, such as classes and subclasses searched, publications, Chemical abstracts, patents, etc. A search made by a foreign patent office satisfies this requirement,
(5) be accompanied by a copy of each of the references most closely related to the subject matter encompassed by the claims if said references are not already of record,
(6) fully discuss the references, pointing out with the particularity required by 37 C.F.R. §1.111 (b) and (c), how the claimed subject matter is patentable over the references.

The petitioner meets all the above-listed requirements. Accordingly, the petition is **GRANTED**.

The application will retain its special status throughout its entire prosecution, including any appeal to the Board of Patent Appeals and Interferences, subject only to diligent prosecution by the applicant. The application file is being forwarded to the examiner for appropriate action in due course.

Kenneth A. Wieder
Special Program Examiner
Technology Center 2600
Communications

UNITED STATES PATENT AND TRADEMARK OFFICE

Commissioner for Patents
United States Patent and Trademark Office
P.O. Box 1450
Alexandria, VA 22313-1450
www.uspto.gov

TAIYO CORPORATION
401 HOLLAND LANE #407
ALEXANDRIA VA 22314

COPY MAILED

MAR 15 2007

OFFICE OF PETITIONS

In re Application of :
Keiichi Suzuki et al :
Application No. 11/071,248 : DECISION GRANTING PETITION
Filed: March 4, 2005 : UNDER 37 CFR 1.137(b)
Attorney Docket No. FS-F03537-01 :

This is a decision on the petition under 37 CFR 1.137(b), filed November 14, 2006, to revive the above-identified application.

The petition is **GRANTED**.

The petition satisfies the conditions for revival pursuant to the provisions of 37 CFR 1.137(b) in that (1) the reply in the form of the issue fee and publication fee; (2) the petition fee; and (3) the required statement of unintentional delay have been received. Accordingly, the reply to the Notice of Allowance of August 2, 2006, is accepted as having been unintentionally delayed.

Telephone inquiries concerning this decision should be directed to the undersigned at (571) 272-3208.

This matter is being referred to Patent Publication.

Karen Creasy

Karen Creasy
Petitions Examiner
Office of Petitions

UNITED STATES PATENT AND TRADEMARK OFFICE

Commissioner for Patents
United States Patent and Trademark Office
P.O. Box 1450
Alexandria, VA 22313-1450
www.uspto.gov

COPY MAILED

JUL 24 2008

OFFICE OF PETITIONS

MORRISON & FOERSTER, LLP
12531 HIGH BLUFF DRIVE
SUITE 100
SAN DIEGO, CA 92130-2040

In re Application of	:	
Tae-Ahn Jahng	:	
Application No. 11/071,271	:	DECISION ON PETITION
Filed: March 2, 2008	:	TO WITHDRAW
Attorney Docket No. 559552000102	:	FROM RECORD
	:	

This is a decision on the Request to Withdraw as attorney or agent of record under 37 C.F.R. § 1.36(b), filed January 18, 2008.

The request is **DISMISSED** as moot.

A review of the file record indicates that the power of attorney to Morrison & Foerster, LLP has been revoked by the assignee of the patent application on January 31, 2008. Accordingly, the request to withdraw under 37 C.F.R. § 1.36(b) is moot.

All future communications from the Office will continue to be directed to the below-listed address until otherwise notified by applicant.

Telephone inquires concerning this decision should be directed to undersigned at 571-272-1642.

April M. Wise
Petitions Examiner
Office of Petitions

cc: BRIAN ROTHERY
STROOCK & STROOCK & LAVAN, LLP
180 MAIDEN LANE
NEW YORK, NY 10038

UNITED STATES PATENT AND TRADEMARK OFFICE

COMMISSIONER FOR PATENTS
UNITED STATES PATENT AND TRADEMARK OFFICE
P.O. BOX 1450
ALEXANDRIA, VA 22313-1450
www.uspto.gov

MUETING, RAASCH & GEBHARDT, P.A.
P.O. BOX 581415
MINNEAPOLIS MN 55458

COPY MAILED

MAY 23 2006

OFFICE OF PETITIONS

Applicant: Elias
Appl. No.: 11/071,272
Filing Date: March 2, 2005
Title: FUSARIUM RESISTANT TETRAPLOID WHEAT
Attorney Docket No.: 255.00080101
Pub. No.: US 2005/0273875 A1
Pub. Date: December 8, 2005

This is a decision on the paper titled a "Request for Correction Of Patent Application Publication," received on February 7, 2006, for the above-identified application

The request is DISMISSED.

Applicant requests that the application be republished because the patent application publication contains a material error on the front page of the publication, as the Office published the wrong assignment information.

37 CFR 1.221(b) is applicable "only when the Office makes a material mistake which is apparent from Office records." A material mistake must affect the public's ability to appreciate the technical disclosure of the patent application publication, to determine the scope of the patent application publication, or to determine the scope of the provisional rights that an applicant may seek to enforce upon issuance of a patent. [1]

The instant request does not identify a material mistake in the publication made by the office under 37 CFR 1.221(b). The application was correctly published with the assignment information provided with the application data sheet on filing.[2]

Applicant is reminded of his duty to conduct a reasonable inquiry before filing a paper before the Office. See MPEP 410.

Applicant's request for a Corrected Publication on February 7, 2006, may constitute a "failure to engage in reasonable efforts to conclude processing or examination of the application." See 1.704(c). This determination will be made on or after a mailing of a Notice of Allowance.

---

[1] Changes to Implement Eighteen-Month Publication of Patent Applications, 65 FR 57023, 57038 (Sept. 20, 2000), 1239, Off. Gaz. Pat. Office Notices 63, 75 (Oct. 10, 2000) (final rule).
[2] See Comment 59, Changes to Implement Eighteen-Month Publication of Patent Applications, 65 FR 57023, 57047 (Sept. 20, 2000), 1239 Off. Gaz. Pat. Office Notices 63, 84 (Oct. 10, 2000) (final rule).

On May 5, 2005 and August 12, 2005, Filing Receipts were mailed by the Office, which listed the assignment information as "North Dakota State University". To avoid this type of problem in the future, applicant's representative should make request a corrected filing receipt along with a supplemental application data sheet. The request for a Corrected Filing Receipt received on September 28, 2005, was received too late for the information to be used in the publication.

The applicant is advised that a "request for republication of an application previously published" may be filed under 37 CFR 1.221 (a). Such a request for republication "must include a copy of the application compliance with the Office's electronic filing system requirements and be accompanied by the publication fee set forth in § 1.18 (d) and the processing fee set forth in § 1.17 (i)." If the request for republication does not comply with the electronic filing system requirements, the republication will not take place and the publication fee set forth in § 1.18 (d) will be refunded. The processing fee will be retained.

Any request for republication under 37 CFR 1.221(a), must be submitted via the EFS system and questions or request for reconsideration of the decision, should be addressed as follows:

By mail to: Mail Stop PGPUB
Commissioner for Patents
P.O. Box 1450
Alexandria, Va. 22313-1450

By facsimile: 571-273-8300

Inquiries relating to this matter may be directed to Mark Polutta at (571) 272-7709 (voice).

Mark Polutta
Senior Legal Advisor
Office of Patent Legal Administration
Office of the Deputy Commissioner
for Patent Examination Policy

UNITED STATES PATENT AND TRADEMARK OFFICE

UNITED STATES DEPARTMENT OF COMMERCE
United States Patent and Trademark Office
Address: COMMISSIONER FOR PATENTS
P.O. Box 1450
Alexandria, Virginia 22313-1450
www.uspto.gov

MUETING, RAASCH & GEBHARDT, P.A.
P.O. BOX 581336
MINNEAPOLIS, MN 55458-1336

Mail Date: 04/21/2010

Applicant	: Elias M. Elias	: DECISION ON REQUEST FOR
Patent Number	: 7652204	: RECALCULATION of PATENT
Issue Date	: 01/26/2010	: TERM ADJUSTMENT IN VIEW
Appliction No	: 11/071,272	: OF WYETH AND NOTICE OF INTENT TO
Filed	: 03/02/2005	: ISSUE CERTIFICATE OF CORRECTION
		:

The Request for Recalculation is **GRANTED** to the extent indicated.

The patent term adjustment has been determined to be **637** days. The USPTO will *sua sponte* issue a certificate of correction reflecting the amount of PTA days determined by the recalculation.

Prior to the issuance of the certificate of correction, the USPTO will afford patentee an opportunity to be heard and request reconsideration. Accordingly, patentee has **one month or thirty (30) days**, whichever is longer, to file a request for reconsideration of this patent term adjustment calculation. See 35 U.S.C. 154(b)(3)(B)(ii) and 37 CFR 1.322(a)(4). No extensions of time will be granted under 37 CFR 1.136.

Patentee should use document code PET.OP if electronically filing a request for reconsideration of this patent term adjustment calculation. The patentee must also include the information required by 37 CFR 1.705(b)(2) and the fee required by 37 CFR 1.18(e). If patentee does not file a timely request for reconsideration of this patent term adjustment calculation including the information required by 37 CFR 1.705(b)(2) and the fee required by 37 CFR 1.18(e), the USPTO will issue a certificate of correction reflecting the PTA determination noted above.

Patentee should be aware that in order to preserve the right to review in the United States District Court for the District of Columbia of the USPTO patent term adjustment determination, patentee must ensure that he or she also take the steps required under 35 U.S.C. 154(b)(4)(A) in a timely manner. Nothing in the request for recalculation should be construed as providing an alternative time frame for commencing a civil action under 35 U.S.C. 154(b)(4)(A).

Any questions concerning this decision should be directed to the Office of Patent Legal Administration at 571-272-7702.

UNITED STATES PATENT AND TRADEMARK OFFICE

Commissioner for Patents
United States Patent and Trademark Office
P.O. Box 1450
Alexandria, VA 22313-1450
www.uspto.gov

Francine L. Hewes, Esq.
Shumaker, Loop & Kendrick, LLP
Suite 2800
101 E. Kennedy Boulevard
Tampa, FL 33602

COPY MAILED

JAN 28 2008

OFFICE OF PETITIONS

In re Application of	
Brian G. Friedman et al.	
Application No. 11/071,279	DECISION ON PETITION
Filed: March 3, 2005	TO WITHDRAW
Attorney Docket No. S53275-101993	FROM RECORD

This is a decision on the Request to Withdraw as attorney or agent under 37 C.F.R. § 1.36(b) filed December 7, 2007.

The request is **NOT APPROVED**.

A review of the file record indicates that Alejandro J. Fernandez does not have power of attorney in this patent application. See 37 C.F.R. § 10.40. Accordingly, the request to withdraw under 37 C.F.R. § 1.36(b) is not applicable. Therefore, there is no authority to sign the request to withdraw on behalf of the attorney Francine L. Hewes, Esq.

It is also noted that customer number 57838 was never appointed to have power of attorney in this application.

All future communications from the Office will continue to be directed to the address above until otherwise properly notified by the applicant.

There are no outstanding Office actions at this time.

Telephone inquires concerning this decision should be directed to Kimberly Inabinet at 571-272-4618.

Kimberly Inabinet
Kimberly Inabinet
Petitions Examiner
Office of Petitions

cc: Brian G. Friedman
384 South Miller Road
Fairlawn, OH 44333

UNITED STATES PATENT AND TRADEMARK OFFICE

Commissioner for Patents
United States Patent and Trademark Office
P.O. Box 1450
Alexandria, VA 22313-1450
www.uspto.gov

CST

10/23/06

In re application of
Tetsuro Suzuki et al
Serial No. 11/071,310
Filed: March 4, 2005
For: ELECTROPHOTOGRAPHIC PHOTORECEPTOR, AND IMAGE FORMING METHOD, IMAGE FORMING APPARATUS, AND IMAGE FORMING APPARATUS PROCESSING UNIT USING SAME

DECISION ON PETITION

This is a decision on the PETITION TO THE DIRECTOR UNDER 37 CFR 1.181(A)(1), filed September 19, 2006. Petitioner requests that the amendment under 37 CFR 1.312 filed July 19, 2006 be entered in full.

Background

On July 19, 2006, application filed an Amendment Under 37 CFR 1.312 in which several amendments to the specification and claims were proposed.

On August 31, 2006, the Response to Rule 312 Communication was mailed. In this correspondence, the examiner indicated that the amendment of July 19, 2006 was entered in part. Specifically, the examiner noted, that "the amendment to the specification places formula (I) on page 26 but the language before and after this proposed placement is directed only to formula (II), which is already present." Accordingly, the amendment entering General Formula (I) to page 26 of the specification was not entered.

A review of the amendment under 37 CFR 1.312 and page 26 of the specification shows that it is clear that applicant intended that General Formula I be inserted as the very first paragraph of page 26, and that immediately following the proposed amendment adding General Formula I, General Formula II would be described.

Application No. 11/071,310

As it appears that the proposed amendment by applicant to insert General Formula I as the first paragraph on page 26 of the specification unambiguously identifies the location to add the paragraph directed to General Formula I, the amendment to page 26 will be entered.

The petition is **GRANTED**.

Jacqueline M. Stone
Director, Technology Center 1700
High Polymer Chemistry, Plastics,
Stock Materials and Compositions

UNITED STATES PATENT AND TRADEMARK OFFICE

Commissioner for Patents
United States Patent and Trademark Office
P.O. Box 1450
Alexandria, VA 22313-1450
www.uspto.gov

BANNER & WITCOFF, LTD.
ATTORNEYS FOR CLIENT NOS. 0166889, 006760
1100 13TH STREET, N.W.
SUITE 1200
WASHINGTON, DC 20005-4051

COPY MAILED

AUG 15 2008

In re Application of	:	
Kan Ishikawa et al	:	
Application No. 11/071,315	:	ON PETITION
Filed: March 4, 2005	:	
Attorney Docket No. 006777.00010		

This is a decision on the petition, filed August 14, 2008 under 37 CFR 1.313(c)(2) to withdraw the above-identified application from issue after payment of the issue fee.

The petition is **GRANTED**.

The above-identified application is withdrawn from issue for consideration of a submission under 37 CFR 1.114 (request for continued examination). See 37 CFR 1.313(c)(2).

Petitioner is advised that the issue fee paid on July 30, 2008 in the above-identified application cannot be refunded. If, however, the above-identified application is again allowed, petitioner may request that it be applied towards the issue fee required by the new Notice of Allowance.[1]

Telephone inquiries should be directed to Irvin Dingle at (571) 272-3210.

This matter is being referred to Technology Center AU 2861 for processing of the request for continued examination under 37 CFR 1.114 and for consideration of the concurrently filed Information Disclosure Statement.

Irvin Dingle
Petitions Examiner
Office of Petitions

---

[1] The request to apply the issue fee to the new Notice may be satisfied by completing and returning the new Issue Fee Transmittal Form PTOL-85(b), which includes the following language thereon: Commissioner for Patents is requested to apply the Issue Fee and Publication Fee (if any) or re-apply any previously paid issue fee to the application identified above. Petitioner is advised that, whether a fee is indicated as being due or not, the Issue Fee Transmittal Form **must** be completed and timely submitted to avoid abandonment. Note the language in bold text on the first page of the Notice of Allowance and Fee(s) Due (PTOL-85).

SPE RESPONSE FOR CERTIFICATE OF CORRECTION

Paper No.: _____

DATE : June 15, 2010

TO SPE OF : ART UNIT 2861 - SPE Matthew Luu.

SUBJECT : Request for Certificate of Correction for Appl. No.: 11/071,315 Patent No.: 7,537,322 B2

Please respond to this request for a certificate of correction within 7 days.

FOR IFW FILES:

Please review the requested changes/corrections as shown in the **COCIN** document(s) in the IFW application image. No new matter should be introduced, nor should the scope or meaning of the claims be changed.

Please complete the response (see below) and forward the completed response to scanning using document code **COCX**.

FOR PAPER FILES:

Please review the requested changes/corrections as shown in the attached certificate of correction. Please complete this form (see below) and forward it with the file to:

Certificates of Correction Branch (CofC)
Randolph Square Building
2800 South Randolph Street
Arlington, VA 22206

Antonio Johnson

Should the U.S. Patent documents and Foreign Patent documents be inserted as requested by applicant? See COCIN dated 12-18-2009

Certificates of Correction Branch

(571)272-0483

Thank You For Your Assistance

The request for issuing the above-identified correction(s) is hereby:
Note your decision on the appropriate box.

- ☐ **Approved** — **All** changes apply.
- ☐ **Approved in Part** — Specify below which changes **do not** apply.
- ☐ **Denied** — State the reasons for denial below.

Comments: All changes have being approved

SPE RESPONSE FOR CERTIFICATE OF CORRECTION

/Matthew Luu/

SPE Art Unit 2861

SPE RESPONSE FOR CERTIFICATE OF CORRECTION

Paper No.: X

DATE : April 21, 2008

TO SPE OF : ART UNIT 2854

SUBJECT : Request for Certificate of Correction for Appl. No.: 11/071320 Patent No.: 7280798 B2

A response is requested with respect to a request for a certificate of correction.

With respect to the change(s) requested to correct Office and/or Applicant's errors, should the patent read as shown in the certificate of correction attached herewith or the COCIN document(s), in IFW images for the above-identified patented application? No new matter should be introduced, nor should the scope or meaning of the claims be changed.

If the response is for an IFW, within **7** days, please complete and forward the response, to the employee (named below) via scanning into application images, using document code **COCX**.

DO NOT SENT TO ATTORNEY

If the response is for a paper file wrapper, please complete the response and forward the response with the paper file wrapper, to the employee (named below), within **7** days, to:

Certificates of Correction Branch (CofC)
South Tower - 9A22
Palm Location 7580

You can fax the Directors/SPE response to 571-270-9990

LAMONTE NEWSOME
Certificates of Correction Branch
703-308-9390 ext. 112

Thank You For Your Assistance

The request for issuing the above-identified correction(s) is hereby:
Note your decision on the appropriate box.

- ☑ **Approved** — **All** changes apply.
- ☐ **Approved in Part** — Specify below which changes **do not** apply.
- ☐ **Denied** — State the reasons for denial below.

Comments: Please note that in Col 1 line 29, the correction is directed to the second appearance of the word "transfer".

Judy Nguyen
JUDY NGUYEN
SUPERVISORY PATENT EXAMINER

SPE 2854 **Art Unit**

SPE RESPONSE FOR CERTIFICATE OF CORRECTION

Paper No.: X

DATE : April 21, 2008

TO SPE OF : ART UNIT 2854

SUBJECT : Request for Certificate of Correction for Appl. No.: 11/071320 Patent No.: 7280798 B2

A response is requested with respect to a request for a certificate of correction.

With respect to the change(s) requested to correct Office and/or Applicant's errors, should the patent read as shown in the certificate of correction attached herewith or the COCIN document(s), in IFW images for the above-identified patented application? No new matter should be introduced, nor should the scope or meaning of the claims be changed.

If the response is for an IFW, within 7 days, please complete and forward the response, to the employee (named below) via scanning into application images, using document code **COCX**.

DO NOT SENT TO ATTORNEY

If the response is for a paper file wrapper, please complete the response and forward the response with the paper file wrapper, to the employee (named below), within 7 days, to:

Certificates of Correction Branch (CofC)
South Tower - 9A22
Palm Location 7580
[redacted]

LAMONTE NEWSOME
Certificates of Correction Branch
703-308-9390 ext. 112

Thank You For Your Assistance

The request for issuing the above-identified correction(s) is hereby:
Note your decision on the appropriate box.

- ☑ **Approved** — **All** changes apply.
- ☐ **Approved in Part** — Specify below which changes **do not** apply.
- ☐ **Denied** — State the reasons for denial below.

Comments: Please note that in Col 1 line 29, the correction is directed to the second appearance of the word "transfer".

Judy Nguyen
JUDY NGUYEN
SUPERVISORY PATENT EXAMINER

SPE

2854
Art Unit

PTOL-306 (REV. 7/03)

U.S. DEPARTMENT OF COMMERCE Patent and Trademark Office

UNITED STATES PATENT AND TRADEMARK OFFICE

UNITED STATES DEPARTMENT OF COMMERCE
United States Patent and Trademark Office
Address: COMMISSIONER FOR PATENTS
P.O. Box 1450
Alexandria, Virginia 22313-1450
www.uspto.gov

APPLICATION NO.	FILING DATE	FIRST NAMED INVENTOR	ATTORNEY DOCKET NO.	CONFIRMATION NO.
11/071,327	03/04/2005	Mikio Hashimoto	265545US2RDDIV	5564

22850 7590 02/20/2008
OBLON, SPIVAK, MCCLELLAND MAIER & NEUSTADT, P.C.
1940 DUKE STREET
ALEXANDRIA, VA 22314

EXAMINER
NALVEN, ANDREW L

ART UNIT	PAPER NUMBER
2134	

NOTIFICATION DATE	DELIVERY MODE
02/20/2008	ELECTRONIC

Please find below and/or attached an Office communication concerning this application or proceeding.

The time period for reply, if any, is set in the attached communication.

Notice of the Office communication was sent electronically on above-indicated "Notification Date" to the following e-mail address(es):

patentdocket@oblon.com
oblonpat@oblon.com
jgardner@oblon.com

UNITED STATES PATENT AND TRADEMARK OFFICE

Commissioner for Patents
United States Patent and Trademark Office
P.O. Box 1450
Alexandria, VA 22313-1450
www.uspto.gov

MAILED

FEB 27 2008

TECHNOLOGY CENTER 2100

Joseph Wrkich
Oblon, Spivak, Mcclelland Maier & Neustadt, P.C.
1940 Duke Street
Alexandria VA 22314

In re Application of:
Mikio Hashimoto et al.
Application No. 11/071,327
Filed: March 4, 2005
For: Tamper Resistant Microprocessor

DECISION ON PETITION UNDER 37 C.F.R. § 1.181

This is a decision on the petition filed on December 21, 2007 and refilled January 23, 2008 under 37 CFR § 1.181(a)(3) requesting that the Examiner consider all references listed on the Form PTO-1449 filed with the Information Disclosure Statement (IDS) on March 4, 2005.

The petition is **GRANTED**.

BACKGROUND

The April 25, 2006 IDS was filed under 37 CFR 1.97(b) and does meet the requirements of both rules 1.97 and 1.98 as a copy of the references was indeed filed in parent application 09/781,158 so consideration by the examiner is warranted. A copy of this decision is being forwarded to the examiner's SPE to notify the examiner to consider the references and mail petitioner a notice indicating that they have been considered.

Any inquiry concerning this decision should be directed to Tod Swann at (571) 272-3612.

Tod Swann
WorkGroup QAS
Technology Center 2100
Computer Architecture, Software, and
Information Security

[redacted] TRS 2-19-08

UNITED STATES PATENT AND TRADEMARK OFFICE

COMMISSIONER FOR PATENTS
UNITED STATES PATENT AND TRADEMARK OFFICE
P.O. BOX 1450
ALEXANDRIA, VA 22313-1450
www.uspto.gov

ANDREWS KURTH LLP
1350 I STREET, NW
SUITE 1100
WASHINGTON, DC 20005

COPY MAILED
JUL 28 2006
OFFICE OF PETITIONS

In re Application of	:	
Garry L. Rumbaugh	:	
Application No. 11/071,335	:	DECISION ON PETITION
Filed: March 4, 2005	:	TO MAKE SPECIAL UNDER
Attorney Docket No. 154635	:	37 CFR 1.102(c)(1)
	:	

This is a decision on the petition under 37 CFR 1.102(c)(1), filed May 8, 2006, to make the above-identified application special based on applicant's age as set forth in M.P.E.P. § 708.02, Section IV.

The petition is **GRANTED**.

A grantable petition to make an application special under 37 CFR 1.102(c)(1) and MPEP § 708.02, Section IV: Applicant's Age must be accompanied by evidence showing that at least one of the applicants is 65 years of age, or more, such as a birth certificate or a statement by applicant. No fee is required

The instant petition includes a statement from Inventor Garry L. Rumbaugh stating that he is over 65 years of age. Accordingly, the above-identified application has been accorded "special" status.

Telephone inquiries concerning this decision should be directed to Irvin Dingle at 571-272-3210.

All other inquiries concerning either the examination or status of the application should be directed to the Technology Center.

The application is being forwarded to the Technology Center Art Unit 1733 for action on the merits commensurate with this decision.

Irvin Dingle
Petitions Examiner
Office of Petitions

UNITED STATES PATENT AND TRADEMARK OFFICE

Commissioner for Patents
United States Patent and Trademark Office
P.O. Box 1450
Alexandria, VA 22313-1450
www.uspto.gov

Donald W. Meeker
924 East Oceanfront #E
Newport Beach CA 92661

MAILED

MAR 18 2009

OFFICE OF PETITIONS

In re Application of	:	
William L. Hutchinson	:	
Application No. 11/071384	:	
Filing or 371(c) Date: 03/03/2005	:	
Attorney Docket Number:	:	
HUTCHINSON	:	ON PETITION

This is a decision on the "Request for Withdrawal of the Holding of Abandonment," filed February 6, 2009. The Request is properly treated as a petition under 37 CFR 1.181.

This Petition is hereby **granted**.

The above-identified application became abandoned for failure to timely and properly reply to the non-final Office action, mailed May 8, 2008. The Office action set a three (3) month period for reply, and provided for extensions of time under 37 CFR 1.136(a). No response having been received, the application became abandoned on August 9, 2008. A Notice of Abandonment was mailed November 14, 2008.

Applicant's Assertion

Applicant files the present petition and asserts that a timely amendment in response to the Office action, including a request and fee for a three (3) month extension of time, was filed via facsimile on November 8, 2008. In support of this assertion, Applicant files a copy of the response, which includes a Certificate of Transmission under 37 CFR 1.8.

A review of Office records also reveals that the amendment in response to the Office action was received by this Office on November 8, 2008[1], including the request and fee for a three (3) month extension of time.

In view of the foregoing, the petition is granted. The holding of abandonment is hereby withdrawn.

No fee has been charged and none is due.

[1] A review of the response reveals that the response includes a receipt stamp dated November 10, 2008; however, a closer review of the response reveals that includes an electronic signature noting receipt of the response by this Office at 11:51:19 PM on November 8, 2008.

The application will be referred to Technology Center Art Unit 3753 for processing of the amendment, and for continued examination in the normal course of business.

Telephone inquiries concerning this matter should be directed to the undersigned at (571) 272-3232.

/Derek L. Woods/
Derek L. Woods
Attorney
Office of Petitions

UNITED STATES PATENT AND TRADEMARK OFFICE

Commissioner for Patents
United States Patent and Trademark Office
P.O. Box 1450
Alexandria, VA 22313-1450
www.uspto.gov

WITHROW & TERRANOVA
P.O. BOX 1287
CARY NC 27512

COPY MAILED

OCT 21 2005

OFFICE OF PETITIONS

In re Application of	:	
Ray J. Hutchinson et al	:	
Application No. 11/071,395	:	ON PETITION
Filed: March 3, 2005	:	
Attorney Docket No. 2400-756A-1	:	

This is a decision on the petition, filed October 20, 2005, under 37 CFR 1.313(c)(2) to withdraw the above-identified application from issue after payment of the issue fee.

The petition is **GRANTED**.

The above-identified application is withdrawn from issue for consideration of a submission under 37 CFR 1.114 (request for continued examination). See 37 CFR 1.313(c)(2).

Petitioner is advised that the issue fee paid on August 18, 2005 in the above-identified application cannot be refunded. If, however, the above-identified application is again allowed, petitioner may request that it be applied towards the issue fee required by the new Notice of Allowance.[1]

Telephone inquiries should be directed to the undersigned at (571) 272-3208.

The examiner of Technology Center AU 2856 will consider the request for continued examination under 37 CFR 1.114.

Karen Creasy

Karen Creasy
Petitions Examiner
Office of Petitions
Office of the Deputy Commissioner
for Patent Examination Policy

---

[1] The request to apply the issue fee to the new Notice may be satisfied by completing and returning the new Issue Fee Transmittal Form PTOL-85(b), which includes the following language thereon: "Commissioner for Patents is requested to apply the Issue Fee and Publication Fee (if any) or re-apply any previously paid issue fee to the application identified above." Petitioner is advised that, whether a fee is indicated as being due or not, the Issue Fee Transmittal Form **must** be completed and timely submitted to avoid abandonment. Note the language in bold text on the first page of the Notice of Allowance and Fee(s) Due (PTOL-85).

UNITED STATES PATENT AND TRADEMARK OFFICE

Commissioner for Patents
United States Patent and Trademark Office
P.O. Box 1450
Alexandria, VA 22313-1450
www.uspto.gov

COPY MAILED

JUN 29 2007

OFFICE OF PETITIONS

HAYNES AND BOONE, LLP
901 MAIN STREET, SUITE 3100
DALLAS TX 75202

In re Application of	:	
COOK, Robert Lance et al.	:	
Application No. 11/071,409	:	DECISION ON PETITION
Filed: March 03, 2005	:	TO WITHDRAW
Attorney Docket No. **25791.352**	:	FROM RECORD

This is a decision on the Request to Withdraw as attorney or agent of record under 37 C.F.R. § 1.36(b), filed April 19, 2007.

The request is **NOT APPROVED**.

A grantable request to withdraw as attorney/agent of record must be signed by every attorney/agent seeking to withdraw or contain a clear indication that one attorney is signing on behalf of another/others. A request to withdraw will not be approved unless at least 30 (thirty) days would remain between the date of approval and the later of the expiration date of a time to file a response or the expiration date of the maximum time period which can be extended under 37 C.F.R. § 1.136(a).

The request cannot be approved because no reasons for withdrawal have been provided. The Office cannot, at this time, determine whether practitioner's request is one of the mandatory or permissive reasons enumerated in 37 CFR 10.40. Any subsequent requests must include reasons for withdrawal. Please note that there is a space provided for on PTO/SB/83 (Request to Withdraw as Attorney or Agent) to supply practitioner's reasons.

All future communications from the Office will continue to be directed to the above-listed address until otherwise notified by applicant.

Telephone inquiries concerning this decision should be directed to Michelle R. Eason at 571-272- 4231.

T. Williams

Terri Williams
Petitions Examiner
Office of Petitions

cc: **KING & SPALDING, L.L.P.**
TODD MATTINGLY
1100 LOUISIANA STREET, SUITE 4000
HOUSTON, TX 77002

UNITED STATES PATENT AND TRADEMARK OFFICE

Commissioner for Patents
United States Patent and Trademark Office
P.O. Box 1450
Alexandria, VA 22313-1450
www.uspto.gov

FAY, SHARPE, FAGAN, MINNICH & MCKEE, LLP
1100 SUPERIOR AVENUE, SEVENTH FLOOR
CLEVELAND OH 44114

COPY MAILED

MAR 16 2006

OFFICE OF PETITIONS

In re Application of
Eric Scott Courtney et al.
Application No. 11/071,419
Filed: March 3, 2005
Attorney Docket No. STUN 2 00001

: DECISION ON PETITION
: UNDER 37 CFR 1.78(a)(6)

This is a decision on the petition under 37 CFR 1.78(a)(6), filed January 23, 2006, to accept an unintentionally delayed claim under 35 U.S.C. §119(e) for the benefit of the prior-filed provisional application set forth in the concurrently filed amendment.

The petition is **DISMISSED.**

A petition under 37 CFR 1.78(a)(6) is only applicable to those applications filed on or after November 29, 2000. Further, the petition is appropriate only after expiration of the period specified in 37 CFR 1.78(a)(5)(ii) and must be filed during the pendency of the nonprovisional application. In addition, the petition must be accompanied by:

(1) the reference required by 35 U.S.C. § 119(e) and 37 CFR 1.78(a)(5)(i) to the prior-filed application, unless previously submitted;
(2) the surcharge set forth in § 1.17(t); and
(3) a statement that the entire delay between the date the claim was due under 37 CFR 1.78(a)(5)(ii) and the date the claim was filed was unintentional. The Commissioner may require additional information where there is a question whether the delay was unintentional.

This pending nonprovisional application was filed on March 3, 2005, within twelve months of the filing date of the prior-filed provisional application, Application No. 60/549,956 , which was filed on March 4, 2004, and for which priority is claimed. A reference to the prior-filed provisional application has been included in an amendment to the first sentence of the specification following the title.

However, the amendment is not acceptable as drafted since it improperly incorporates by reference the prior-filed application. Since the wrong application number was cited in the specification and transmittal on filing with the incorporation by reference statement, an incorporation by reference statement cannot be used when citing the correct application since this is a different application. An incorporation by reference statement

added after an application's filing date is not effective because no new matter can be added to an application after its filing date (*see* 35 U.S.C. § 132(a)). If an incorporation by reference statement is included in an amendment to the specification to add a benefit claim under 35 U.S.C. § 120 after the filing date of the application, the amendment would not be proper. When a benefit claim under 35 U.S.C. § 120 is submitted after the filing of an application, the reference to the prior application cannot include an incorporation by reference statement of the prior application. *See* Dart Industries v. Banner, 636 F.2d 684, 207 USPQ 273 (C.A.D.C. 1980). *Note* MPEP §§ 201.06(c) and 608.04(b).

Accordingly, before the petition under 37 CFR 1.78(a)(6) can be granted, a renewed petition under 37 CFR 1.78(a)(6) and either an Application Data Sheet or a proper amendment (complying with 37 CFR 1.121 or 37 CFR 1.76(b)(5)) deleting the incorporation by reference statement, are required.

Further correspondence with respect to this matter should be addressed as follows:

By mail: Mail Stop PETITIONS
Commissioner for Patents
Post Office Box 1450
Alexandria, VA 22313-1450

By hand: Customer Service Window
Mail Stop Petitions
Randolph Building
40l Dulany Street
Alexandria, VA 22314

By fax: (571) 273-8300
ATTN: Office of Petitions

Any inquiries concerning this decision may be directed to Senior Petitions Attorney Patricia Faison-Ball at (571) 272-3212 .

Frances Hicks
Lead Petitions Examiner
Office of Petitions

UNITED STATES PATENT AND TRADEMARK OFFICE

Commissioner for Patents
United States Patent and Trademark Office
P.O. Box 1450
Alexandria, VA 22313-1450
www.uspto.gov

FAY, SHARPE, FAGAN, MINNICH & MCKEE, LLP
1100 SUPERIOR AVENUE, SEVENTH FLOOR
CLEVELAND OH 44114

COPY MAILED

MAY 2 5 2006

OFFICE OF PETITIONS

In re Application of	:
Eric Scott Courtney et al.	: DECISION ON PETITION
Application No. 11/071,419	: UNDER 37 CFR 1.78(a)(6)
Filed: March 3, 2005	:
Attorney Docket No. STUN 2 00001	:

This is a decision on the renewed petition under 37 CFR 1.78(a)(6), filed April 27, 2006, to accept an unintentionally delayed claim under 35 U.S.C. §119(e) for the benefit of the prior-filed provisional application set forth in the concurrently filed amendment.

The petition is **GRANTED**.

A petition filed January 23, 2006 was dismissed March 16, 2006 because the amendment filed with the petition improperly incorporated by reference the prior filed application. Comes now petitioner with the instant renewed petition.

A petition under 37 CFR 1.78(a)(6) is only applicable to those applications filed on or after November 29, 2000. Further, the petition is appropriate only after expiration of the period specified in 37 CFR 1.78(a)(5)(ii) and must be filed during the pendency of the nonprovisional application. In addition, the petition must be accompanied by:

> **(1)** the reference required by 35 U.S.C. § 119(e) and 37 CFR 1.78(a)(5)(i) to the prior-filed application, unless previously submitted;
> **(2)** the surcharge set forth in § 1.17(t); and
> **(3)** a statement that the entire delay between the date the claim was due under 37 CFR 1.78(a)(5)(ii) and the date the claim was filed was unintentional. The Commissioner may require additional information where there is a question whether the delay was unintentional.

The instant nonprovisional application was filed after November 29, 2000, and the claim herein for the benefit of priority to the prior-filed provisional application is submitted after expiration of the period specified in 37 CFR 1.78(a)(5)(ii). Therefore, this is a proper petition under 37 CFR 1.78(a)(6).

The instant nonprovisional application was pending at the time of filing of the reference to the prior-filed provisional application as required by 37 CFR 1.78(a)(5)(iii).

The petition complies with the requirements for a grantable petition under 37 CFR 1.78(a)(6) in that (1) a reference to the prior-filed provisional application has been included in an amendment to the first sentence of the specification following the title, as provided by 37 CFR 1.78(a)(5)(iii); (2) the surcharge fee required by 37 CFR 1.17(t) has been submitted; and (3) the petition contains a proper statement of unintentional delay. Accordingly, having found that the instant petition for acceptance of an unintentionally delayed claim for the benefit of priority under 35 U.S.C. § 119(e) to the prior-filed provisional application satisfies the conditions of 37 CFR 1.78(a)(6), the petition is granted.

The granting of the petition to accept the delayed benefit claim to the prior-filed application under 37 CFR 1.78(a)(6) should not be construed as meaning that the instant application is entitled to the benefit of the filing date of the prior-filed application. In order for the instant application to be entitled to the benefit of the prior-filed application, all other requirements under 35 U.S.C. §119(e) and 37 CFR 1.78(a)(4) and (a)(5) must be met. Similarly, the fact that the corrected Filing Receipt accompanying this decision on petition includes the prior-filed application should not be construed as meaning that applicant is entitled to the claim for benefit of priority to the prior-filed application noted thereon. Accordingly, the examiner will, in due course, consider this benefit claim and determine whether the instant application is entitled to the benefit of the earlier filing date.

A corrected Filing Receipt, which includes the priority claim to the prior-filed provisional application, accompanies this decision on petition.

The fee for an unintentionally delayed claim of priority in the amount of $1,370.00 was paid with the petition filed January 23 2006 and there is no need for any additional fees.

Any inquiries concerning this decision may be directed to Senior Petitions Attorney Patricia Faison-Ball at (571) 272-3212. All other inquiries concerning either the examination procedures or status of the application should be directed to the Technology Center.

This matter is being referred to Technology Center AU 3617 for appropriate action on the amendment submitted April 27, 2006, including consideration by the examiner of the claim under 35 U.S.C. §119(e) for the benefit of priority to prior-filed provisional Application No. 60/549,956.

Frances Hicks
Lead Petitions Examiner
Office of Petitions

ATTACHMENT: Corrected Filing Receipt

UNITED STATES PATENT AND TRADEMARK OFFICE

COMMISSIONER FOR PATENTS
UNITED STATES PATENT AND TRADEMARK OFFICE
P.O. BOX 1450
ALEXANDRIA, VA 22313-1450
www.uspto.gov

COPY MAILED

SEP 06 2005

OFFICE OF PETITIONS

CHRISTIE, PARKER & HALE, LLP
PO BOX 7068
PASADENA CA 91109-7068

In re Application of :
Andre Arturo Gulmesoff :
Application No. 11/071,424 : DECISION ON PETITION
Filed: March 2, 2005 :
Attorney Docket No. 54579/JWP/V235:

This is a decision in response to a petition filed April 4, 2005, requesting that the above-identified application be accorded a filing date of March 2, 2005.

A review of the record discloses that USPTO records have been updated to show the correct filing date pursuant to 37 CFR 1.10. A corrected Official Filing Receipt was mailed on July 15, 2005.

Accordingly, the present petition is dismissed as moot. No petition fee was charged to counsels deposit account, nor is one due.

Telephone inquires related to this decision should be directed to the undersigned at (571) 272-3204.

Sherry D. Brinkley
Petitions Examiner
Office of Petitions
Office of the Deputy Commissioner
for Patent Examination Policy

UNITED STATES PATENT AND TRADEMARK OFFICE

COMMISSIONER FOR PATENTS
UNITED STATES PATENT AND TRADEMARK OFFICE
P.O. BOX 1450
ALEXANDRIA, VA 22313-1450
www.uspto.gov

DARBY & DARBY (formerly Sacco & Associates)
P.O. BOX 770
CHURCH STREET STATION
NEW YORK NY 10008-0770

COPY MAILED
JUN 16 2008

In re Application of :
O'Halloran : DECISION ON PETITION
Application No. 11/071,427 :
Filed: March 3, 2005 :
Atty. Dkt. No.: 6600-0025 :

This decision is in response to the petition to under 37 CFR 1.137(a) filed April 29, 2008. This matter is sua sponte being treated under 37 CFR 1.181 as a petition to withdraw the holding of abandonment.

This application was held abandoned for failure to timely submit a proper reply to the non-final Office action mailed September 25, 2007. The non-final Office action set a three month shortened statutory period of time for reply. This decision precedes Notice of Abandonment.

DECISION UNDER 37 CFR 1.181

Petitioner argues that a proper response to the non-final Office action was timely submitted on December 21, 2007. Petitioner has included a copy of a postcard date-stamped December 27, 2007 acknowledging receipt of an amendment, response, replacement drawing, transmittal sheet, and postcard. Petitioner has also provided a copy of the complete reply referenced on the postcard. The copy of the reply bears a certificate of mailing date of December 21, 2007 in accordance with 37 CFR 1.8.

Review of Office records reveals that the response received at the USPTO on December 27, 2007, while intended for instant application did not include the correct application serial number. The response improperly cited U.S. App. No. 11/***017***,427. The response contained a certificate of mailing date of December 21, 2007 in accordance with 37 CFR 1.8. As a result of applicants' error, the application was held abandoned.

Correspondence directed to the Patent and Trademark Office concerning a previously filed application for a patent must identify the application number and filing date assigned to that application by the Office. See, 37 CFR 1.5(a). In the above-

referenced application, applicant failed to correctly identify the application by citing an incorrect application number in the response. The Office elects, in this instance, to treat applicant's error as a correctable minor error as permitted under MPEP 502. However, applicants are reminded that minor errors, such as occurred in the instant application, are to be avoided in the future by the careful review of correspondence prior to submission to the Office.

In view of the evidence thereof, the petition to withdraw the holding of abandonment is hereby GRANTED.

The Notice of Abandonment is hereby VACATED and the holding of abandonment is WITHDRAWN.

DECISION UNDER 37 CFR 1.137(a)

A grantable petition under 37 CFR 1.137(a) must be accompanied by: (1) the required reply, unless previously filed; (2) the petition fee as set forth in 37 CFR 1.17(l); (3) a showing to the satisfaction of the Commissioner that the entire delay in filing the required reply from the due date for the reply until the filing of a grantable petition pursuant to 37 CFR 1.137(a) was unavoidable; and (4) any terminal disclaimer (and fee as set forth in 37 CFR 1.20(d)) required pursuant to 37 CFR 1.137(c).

However, in view of the withdrawal of the holding of abandonment, the petition under 37 CFR 1.137(a) is DISMISSED AS MOOT.

No fee has been assessed in connection with this matter.

This application is being forwarded to Technology Center 3700 for further processing.

There is no indication that the petition is signed by a registered patent attorney or patent agent of record. However, in accordance with 37 CFR 1.34, the signature of Mr. Litman appearing on the correspondence shall constitute a representation to the United States Patent and Trademark Office that he is authorized to represent the particular party in whose behalf he acts. If, Mr. Litman desires to receive correspondence regarding this file, the appropriate power of attorney documents must be submitted. A courtesy copy of this decision is being mailed to Mr. Litman, the petitioner herein. However, until otherwise instructed, all future correspondence regarding this

application file will be directed solely to the above-noted correspondence address of record.

Telephone inquiries concerning this matter may be directed to the undersigned at (571) 272-3205.

Alesia M. Brown
Petitions Attorney
Office of Petitions

CC: MARK A. LITMAN & ASSOCIATES, P.A.
York Business Center, Suite 205
3209 West 76th Street
Edina, Minnesota 55435

UNITED STATES PATENT AND TRADEMARK OFFICE

Commissioner for Patents
United States Patent and Trademark Office
P.O. Box 1450
Alexandria, VA 22313-1450
www.uspto.gov

Klarquist Sparkman LLP
121 S.W. Salmon Street
Suite 1600
Portland OR 97204

COPY MAILED

AUG 1 0 2005

OFFICE OF PETITIONS

In re Application of :
Gu et al. :
Application No. 11/071,435 : ON PETITION
Filed: March 2, 2005 :
Attorney Docket No. 3382-53698-03 :

This is in response to the petition under 37 CFR 1.47(a), filed June 29, 2005 (certificate of mailing of June 27, 2005).

The petition is **dismissed**.

Applicants are given TWO (2) MONTHS from the mailing date of this decision to reply, correcting the below-noted deficiencies. Any reply should be entitled "Request for Reconsideration of Petition Under 37 CFR 1.47(a)," and should address the deficiencies noted below, except that the reply may include an oath or declaration executed by the non-signing inventor. Failure to respond will result in abandonment of the application. Any extensions of time will be governed by 37 CFR 1.136(a).

On March 2, 2005, applicants filed above-identified application; however, the declaration was missing the signature of Yaron Y. Goland. Accordingly, on April 27, 2005, the Office mailed a Notice to File Missing Parts of Nonprovisional Application, requiring the signature of inventor Goland on the declaration and a surcharge for its late filing.

In response, on June 29, 2005 (certificate of mailing of June 27, 2005), applicants submitted the present petition, a declaration for application No. 09/496,318, signed by four of the five joint inventors on behalf of themselves and the non-signing inventor, a Declaration of Facts of Melinda Pallemaerts for application No. 09/496,318, and the requisite fees.

A grantable petition under 37 CFR 1.47(a) requires: (1) proof that the non-signing inventor cannot be reached or refuses to sign the oath or declaration after having been presented with the application papers (specification, claims and drawings); (2) an acceptable oath or declaration in compliance with 35 U.S.C. §§ 115 and 116; (3) the petition fee; and (4) a statement of the last known address of the non-signing inventor. Applicants lack items (1) and (2) as set forth above.

As to item (1), applicants failed establish that the inventor refused to sign the oath or declaration after having been presented with the application papers (specification, claims, drawings, and oath or declaration).

Specifically, applicants did not provide evidence that non-signing inventor received a complete copy of the application papers (specification, claims, and drawings) and an oath or declaration for the above-identified application, and thereafter refused to execute the oath or declaration. The Declaration of Facts of Melinda Pallemaerts and the declaration submitted with the petition relate to application No. 09/496,318, instead of application No. 11/071,435.

If the USPTO accorded Rule 47 status in application No. 09/496,318, applicants must comply with the provisions of 37 CFR 1.63(d) as stated:

> (3) Where the executed oath or declaration of which a copy is submitted for a continuation or divisional application was originally filed in a prior application accorded status under § 1.47, the copy of the executed oath or declaration for such prior application must be accompanied by:
>
> (i) A copy of the decision granting a petition to accord § 1.47 status to the prior application, unless all inventors or legal representatives have filed an oath or declaration to join in an application accorded status under § 1.47 of which the continuation or divisional application claims a benefit under 35 U.S.C. 120, 121, or 365(c); and
>
> (ii) If one or more inventor(s) or legal representative(s) who refused to join in the prior application or could not be found or reached has subsequently joined in the prior application or another application of which the continuation or divisional application claims a benefit under 35 U.S.C. 120, 121, or 365(c), a copy of the subsequently executed oath(s) or declaration(s) filed by the inventor or legal representative to join in the application.

If the USPTO did not accord Rule 47 status in application No. 09/496,318, applicants are required to establish that applicants presented the non-signing inventor with the application papers (specification, including claims, drawings) and an oath or declaration for the present application that the non-signing inventor thereafter refused the request to execute the oath or declaration. Additionally, applicants are reminded that before a refusal to sign an oath or declaration can be alleged, it must be demonstrated that applicants made a bona fide effort to present a copy of the application papers (specification, including claims, drawings) and an oath or declaration to the non-signing inventor.

As to item (2), applicants failed to submit an oath or declaration for the present application in compliance with 37 CFR 1.63 and 1.64. The declaration does not identify the country of citizenship of inventor Goland. The Office notes that the oath or declaration must identify the country of citizenship of each inventor. See 37 CFR 1.63(a)(3). Accordingly, to correct the deficiency, applicants must submit new oath or declaration in compliance with 37 CFR 1.63 and

1.67, which identifies the entire inventive entity, the citizenship of each inventor, and is signed by the four signing inventors on behalf of themselves and non-signing inventor Goland.

Accordingly, the petition is dismissed.

Further correspondence with respect to this matter should be addressed as follows and **to the attention of Christina Tartera Donnell, Senior Petitions Attorney**:

By mail: Commissioner for Patents
Mail Stop Petition
PO Box 1450
Alexandria, VA 22313-1450

By FAX: (571) 273-8300
Attn: Office of Petitions

By hand: 2011 South Clark Place
Customer Window
Crystal Plaza 2, Lobby,
Room 1B03
Arlington, VA 22202

Telephone inquiries related to this decision may be directed to the undersigned at (571) 272-3211.

Christina Tartera Donnell

Christina Tartera Donnell
Senior Petitions Attorney
Office of Petitions

UNITED STATES PATENT AND TRADEMARK OFFICE

Commissioner for Patents
United States Patent and Trademark Office
P.O. Box 1450
Alexandria, VA 22313-1450
www.uspto.gov

Klarquist Sparkman LLP
121 S.W. Salmon Street
Suite 1600
Portland OR 97204

COPY MAILED

SEP 27 2005

OFFICE OF PETITIONS

In re Application of	:	
Gu et al.	:	
Application No. 11/071,435	:	LETTER
Filed: March 2, 2005	:	
Attorney Docket No. 3382-53698-03	:	

This is in response to the renewed petition under 37 CFR 1.47(a), filed September 12, 2005.

In accordance with 37 CFR 1.63(d), petitioner submitted a copy of the executed declaration filed in Application No. 09/496,318, filed on February 1, 2000, of which the present filing is a divisional application. Additionally, petitioner submitted a copy of the decision, mailed on March 20, 2002, granting a petition under 37 CFR 1.47(a) in the prior application. As § 1.47(a) status was granted in the prior application, this application is hereby accorded § 1.47(a) status.

The present petition is **dismissed** as involving a moot issue.

As provided in 37 CFR 1.47(c), the Office is dispensing with the notice provision in this divisional application because the Office provided notice to the non-signing inventors regarding the § 1.47(a) status in the prior application.

This matter is being referred to the Office of Initial Patent Examination for further processing.

Telephone inquiries related to this decision may be directed to the undersigned at (571) 272-3211.

Christina T. Donnell

Christina Tartera Donnell
Senior Petitions Attorney
Office of Petitions

UNITED STATES PATENT AND TRADEMARK OFFICE

UNITED STATES DEPARTMENT OF COMMERCE
United States Patent and Trademark Office
Address: COMMISSIONER FOR PATENTS
P.O. Box 1450
Alexandria, Virginia 22313-1450
www.uspto.gov

KLARQUIST SPARKMAN LLP
121 S.W. SALMON STREET
SUITE 1600
PORTLAND, OR 97204

Mail Date: 04/21/2010

Applicant	: Ye Gu	: DECISION ON REQUEST FOR
Patent Number	: 7602756	: RECALCULATION of PATENT
Issue Date	: 10/13/2009	: TERM ADJUSTMENT IN VIEW
Appliction No	: 11/071,435	: OF WYETH AND NOTICE OF INTENT TO
Filed	: 03/02/2005	: ISSUE CERTIFICATE OF CORRECTION
		:

The Request for Recalculation is **GRANTED** to the extent indicated.

The patent term adjustment has been determined to be **953** days. The USPTO will *sua sponte* issue a certificate of correction reflecting the amount of PTA days determined by the recalculation.

Prior to the issuance of the certificate of correction, the USPTO will afford patentee an opportunity to be heard and request reconsideration. Accordingly, patentee has **one month or thirty (30) days**, whichever is longer, to file a request for reconsideration of this patent term adjustment calculation. See 35 U.S.C. 154(b)(3)(B)(ii) and 37 CFR 1.322(a)(4). No extensions of time will be granted under 37 CFR 1.136.

Patentee should use document code PET.OP if electronically filing a request for reconsideration of this patent term adjustment calculation. The patentee must also include the information required by 37 CFR 1.705(b)(2) and the fee required by 37 CFR 1.18(e). If patentee does not file a timely request for reconsideration of this patent term adjustment calculation including the information required by 37 CFR 1.705(b)(2) and the fee required by 37 CFR 1.18(e), the USPTO will issue a certificate of correction reflecting the PTA determination noted above.

Patentee should be aware that in order to preserve the right to review in the United States District Court for the District of Columbia of the USPTO patent term adjustment determination, patentee must ensure that he or she also take the steps required under 35 U.S.C. 154(b)(4)(A) in a timely manner. Nothing in the request for recalculation should be construed as providing an alternative time frame for commencing a civil action under 35 U.S.C. 154(b)(4)(A).

Any questions concerning this decision should be directed to the Office of Patent Legal Administration at 571-272-7702.

UNITED STATES PATENT AND TRADEMARK OFFICE

COMMISSIONER FOR PATENTS
UNITED STATES PATENT AND TRADEMARK OFFICE
P.O. BOX 1450
ALEXANDRIA, VA 22313-1450
WWW.USPTO.GOV

Paper No. None

COPY MAILED

OCT 20 2005

OFFICE OF PETITIONS

BIRCH STEWART KOLASCH & BIRCH
PO BOX 747
FALLS CHURCH VA 22040-0747

In re Application of	:	
Teijo Lehtonen, Jussi Jantti, and Markus Nymark	:	DECISION ON PETITION UNDER 37 C.F.R. §1.47(a)
Application No. 11/071,463	:	
Filed: March 4, 2005	:	
Attorney Docket No. 0837-0187PUS1	:	
Title: CUSTOMER LOYALTY CARD AND DEVICES ASSOCIATED THEREWITH	:	

This is in response to the petition under 37 C.F.R. §1.47(a)[1], filed September 30, 2005.

On March 4, 2005, the application was deposited. No oath or declaration was included on filing. On March 30, 2005, a "Notice to File Missing Parts of Nonprovisional Application – Filing Date Granted" (Notice) was mailed, indicating that a fully executed oath or declaration and the associated surcharge were required. This Notice set a two-month period for reply.

1A grantable petition under 37 C.F.R. §1.47(a) requires:

(1) the petition fee of $130;
(2) a surcharge of either $65 or $130 if the petition is not filed at the time of filing the application, as set forth in 37 CFR § 1.16(e);
(3) a statement of the last known address of the non-signing inventors;
(4) either
  a) proof that a copy of the entire application (specification, claims, drawings, and the oath or declaration) was sent or given to the non-signing inventor for review and proof that the non-signing inventor refuses to join in the application or
  b) proof that the non-signing inventor cannot be found or reached after diligent effort;
(5) a declaration which complies with 37 CFR §1.63.

With the present petition, Petitioner has submitted the petition fee, the associated surcharge, and a declaration which has been signed by the first and last listed joint inventors. Petitioner has further included a four-month extension of time to make timely this response.

Petitioner has met requirements (1) – (3) and (5) of 37 C.F.R. §1.47(a).

Regarding the fourth requirement, Petitioner has provided the following showing under 37 C.F.R. §1.47(a), which is reproduced *in toto*:

"The client has contacted Mr. JANTTI to sign the declaration, but he has refused[2]."

No mention is made of any attempt to forward a complete copy of the application to the last known address of the non-signing inventor. As such, it is clear that the same was not provided with a complete copy of the application. It is equally clear that Petitioner does not have firsthand knowledge of the underlying events, since it is the Applicant who contacted the non-signing joint inventor.

It follows that one cannot refuse to sign something which one has not been presented with. A refusal by an inventor to sign an oath or declaration when the inventor has not been presented with the application papers does not itself suggest that the inventor is refusing to join the application unless it is clear that the inventor understands exactly what he or she is being asked to sign and refuses to accept the application papers. It is reasonable to require that the inventor be presented with the application papers before a petition under 37 CFR §1.47 is granted since such a procedure ensures that the inventor is apprised of the application to which the oath or declaration is directed[3].

Petitioner may wish to consider sending a complete copy of the application to the non-signing inventor and waiting an appropriate period of time before submitting any renewed petition, in order to provide him with the opportunity to respond. Furthermore, any statement of facts provided along with the renewed petition should be submitted by one having firsthand knowledge of the underlying events.

As such, the petition must be **DISMISSED**.

Any reply must be submitted within **TWO (2) MONTHS** from the mail date of this decision. Extensions of time under 37 C.F.R. §1.136(a) are permitted. The reply should include a cover letter entitled "Renewed Petition Under 37 C.F.R. §1.47(a)." This is not a final agency action within the meaning of 5 U.S.C 704. The renewed petition should indicate in a prominent manner that the attorney handling this matter is Paul Shanoski. Any renewed petition may be submitted by mail[4], hand-delivery[5], or facsimile[6].

---

2 Petition, page 1.
3 In re Gray, 115 USPQ 80 (Comm'r Pat. 1956).
4 Mail Stop Petition, Commissioner for Patents, United States Patent and Trademark Office, P.O. Box 1450, Alexandria, VA, 22313-1450.
5 Customer Window, Randolph Building, 401 Dulaney Street, Alexandria, VA, 22314.
6 (571) 273-8300- please note this is a central facsimile number.

Telephone inquiries regarding *this decision* should be directed to the undersigned at (571) 272-3225. All other inquiries concerning examination procedures or status of the application should be directed to the Technology Center.

Notice regarding fees:

Historically the fees that the USPTO charges for doing business increase at the beginning of each fiscal year (October 1). Please be advised that applicants should monitor the USPTO website for future updates whenever any necessary money is sent[7].

Paul Shanoski
Senior Attorney
Office of Petitions
United States Patent and Trademark Office

7 For more information, see www.USPTO.gov.

UNITED STATES PATENT AND TRADEMARK OFFICE

COMMISSIONER FOR PATENTS
UNITED STATES PATENT AND TRADEMARK OFFICE
P.O. BOX 1450
ALEXANDRIA, VA 22313-1450
WWW.USPTO.GOV

Paper No. None

BIRCH STEWART KOLASCH & BIRCH
PO BOX 747
FALLS CHURCH VA 22040-0747

COPY MAILED

JUN 21 2006

OFFICE OF PETITIONS

In re Application of :
Teijo Lehtonen, Jussi Jantti, and Markus Nymark :
Application No. 11/071,463 :
Filed: March 4, 2005 :
Attorney Docket No. 0837-0187PUS1 :
Title: CUSTOMER LOYALTY CARD AND DEVICES ASSOCIATED THEREWITH :

DECISION ON RENEWED PETITION UNDER 37 C.F.R. §1.47(a)

This is in response to the renewed petition under 37 C.F.R. §1.47(a)[1], filed May 19, 2005.

On March 4, 2005, the application was deposited. No oath or declaration was included on filing. On March 30, 2005, a "Notice to File Missing Parts of Nonprovisional Application – Filing Date Granted" (Notice) was mailed, indicating that a fully executed oath or declaration and the associated surcharge were required. This Notice set a two-month period for reply.

1A grantable petition under 37 C.F.R. §1.47(a) requires:

(1) the petition fee of $130;
(2) a surcharge of either $65 or $130 if the petition is not filed at the time of filing the application, as set forth in 37 CFR § 1.16(e);
(3) a statement of the last known address of the non-signing inventors;
(4) either
  a) proof that a copy of the entire application (specification, claims, drawings, and the oath or declaration) was sent or given to the non-signing inventor for review and proof that the non-signing inventor refuses to join in the application or
  b) proof that the non-signing inventor cannot be found or reached after diligent effort;
(5) a declaration which complies with 37 CFR §1.63.

The original petition was submitted on September 30, 2005, and was dismissed via the mailing of a decision on October 20, 2005, for failure to establish that a complete copy of the application was sent to the last known address of the non-signing inventor.

With this renewed petition, Petitioner has evinced that a complete copy of the present application was sent to the last known address of the non-signing inventor. Petitioner has also included a five-month extension of time, to make timely this submission.

With the present petition, Petitioner has met all requirements of 37 C.F.R. §1.47(a). Therefore, the petition is **GRANTED** and this application is hereby accorded Rule §1.47(a) status.

As provided in Rule 1.47(a), this Office will forward notice of this application's filing to the non-signing inventor at the address given on the declaration. Notice of the filing of this application will also be published in the Official Gazette.

Telephone inquiries regarding this decision should be directed to the undersigned at (571) 272-3225. All other inquiries concerning examination procedures or status of the application should be directed to the Technology Center.

Paul Shanoski
Senior Attorney
Office of Petitions
United States Patent and Trademark Office

UNITED STATES PATENT AND TRADEMARK OFFICE

COMMISSIONER FOR PATENTS
UNITED STATES PATENT AND TRADEMARK OFFICE
P.O. BOX 1450
ALEXANDRIA, VA 22313-1450
WWW.USPTO.GOV

Jussi Jantti
Tapolantie 8
FIN-05840 Hyvinkaa
FINLAND

COPY MAILED

JUN 21 2006

OFFICE OF PETITIONS

In re Application of :

Teijo Lehtonen, Jussi Jantti, and Markus Nymark :
Application No. 11/071,463 :
Filed: March 4, 2005 : LETTER
Attorney Docket No. 0837-0187PUS1 :
Title: CUSTOMER LOYALTY CARD AND :
DEVICES ASSOCIATED THEREWITH :

Dear Mr. Jantti:

You are named a joint inventor in the above-identified United States patent application filed under the provisions of 35 U.S.C. 116 (United States Code) and 37 CFR 1.47(a), Rules of Practice in Patent Cases. Should a patent be granted on the application, you will be designated therein as a joint inventor.

As a named inventor you are entitled to inspect any paper in the file wrapper of the application, order copies of all or any part thereof (at a prepaid cost per 37 CFR 1.19) or make your position of record in the application. Alternatively, you may arrange to do any of the preceding through a registered patent attorney or agent presenting written authorization from you. If you care to join the application, the attorney of record below would presumably assist you. Joining in the application would entail the filing of an appropriate oath or declaration by you pursuant to 37 CFR 1.63.

Telephone inquiries regarding this communication should be directed to the undersigned at (571) 272-3225. Requests for information regarding your application should be directed to the File Information Unit at (703) 308-2733. Information regarding how to pay for and order a copy of the application, or a specific paper in the application, should be directed to the Certification Division at (703) 308-9726 or 1-800-972-6382 (outside the Washington D.C. area).

Paul Shanoski
Senior Attorney
Office of Petitions
United States Patent and Trademark Office

cc: BIRCH STEWART KOLASCH & BIRCH
PO BOX 747
FALLS CHURCH VA 22040-0747