UNITED STATES PATENT AND TRADEMARK OFFICE

UNITED STATES DEPARTMENT OF COMMERCE
United States Patent and Trademark Office
Address: COMMISSIONER FOR PATENTS
P.O. Box 1450
Alexandria, Virginia 22313-1450
www.uspto.gov

DUFT BORNSEN & FISHMAN, LLP
1526 SPRUCE STREET
SUITE 302
BOULDER, CO 80302

Mail Date: 05/03/2010

Applicant	: Frances Mu-Fen Chin	: DECISION ON REQUEST FOR
Patent Number	: 7613470	: RECALCULATION of PATENT
Issue Date	: 11/03/2009	: TERM ADJUSTMENT IN VIEW
Application No	: 11/071,481	: OF WYETH AND NOTICE OF INTENT TO
Filed	: 03/03/2005	: ISSUE CERTIFICATE OF CORRECTION
		:

The Request for Recalculation is **GRANTED** to the extent indicated.

The patent term adjustment has been determined to be **90** days. The USPTO will *sua sponte* issue a certificate of correction reflecting the amount of PTA days determined by the recalculation.

Prior to the issuance of the certificate of correction, the USPTO will afford patentee an opportunity to be heard and request reconsideration. Accordingly, patentee has **one month or thirty (30) days**, whichever is longer, to file a request for reconsideration of this patent term adjustment calculation. See 35 U.S.C. 154(b)(3)(B)(ii) and 37 CFR 1.322(a)(4). No extensions of time will be granted under 37 CFR 1.136.

Patentee should use document code PET.OP if electronically filing a request for reconsideration of this patent term adjustment calculation. The patentee must also include the information required by 37 CFR 1.705(b)(2) and the fee required by 37 CFR 1.18(e). If patentee does not file a timely request for reconsideration of this patent term adjustment calculation including the information required by 37 CFR 1.705(b)(2) and the fee required by 37 CFR 1.18(e), the USPTO will issue a certificate of correction reflecting the PTA determination noted above.

Patentee should be aware that in order to preserve the right to review in the United States District Court for the District of Columbia of the USPTO patent term adjustment determination, patentee must ensure that he or she also take the steps required under 35 U.S.C. 154(b)(4)(A) in a timely manner. Nothing in the request for recalculation should be construed as providing an alternative time frame for commencing a civil action under 35 U.S.C. 154(b)(4)(A).

Any questions concerning this decision should be directed to the Office of Patent Legal Administration at 571-272-7702.

UNITED STATES PATENT AND TRADEMARK OFFICE

Commissioner for Patents
United States Patent and Trademark Office
P.O. Box 1450
Alexandria, VA 22313-1450
www.uspto.gov

WERNER FUNK
C/O OMNITEK ENGINEERING CORPORATION
1945 SOUTH RANCHO SANTA FE ROAD
SAN MARCOS CA 92069

MAIL

JUL 26 2005

DIRECTOR OFFICE
TECHNOLOGY CENTER 2600

In re Application of
FUNK, WERNER
Application No. 11/071,508
Filed: March 3, 2005
For: MULTI-FUEL ENGINE CONVERSION SYSTEM AND METHOD

DECISION ON PETITION TO MAKE SPECIAL

This is a decision on the petition filed April 18, 2005 to make the above-identified application special in accordance with M.P.E.P. § 708.02, V (Environment.)

Applicants explain in the petition how the claimed invention would meet the goal of enhancing the environment by reducing emissions.

The petition is **GRANTED.**

The application is being forwarded to the Examiner for expedited prosecution.

Kenneth A. Wieder
Special Program Examiner
Technology Center 2600
Communications

UNITED STATES PATENT AND TRADEMARK OFFICE

Commissioner for Patents
United States Patent and Trademark Office
P.O. Box 1450
Alexandria, VA 22313-1450
www.uspto.gov

COPY MAILED

JUL 0 2 2007

OFFICE OF PETITIONS

Moazzam & Associates, LLC
7601 Lewinsville Road
Suite 304
McClean, VA 22102

In re Application of	:	
Yanyun Zhao et al.	:	
Application No. 11/071,526	:	DECISION ON PETITION
Filed: March 4, 2005	:	TO WITHDRAW
Attorney Docket No. 11071526	:	FROM RECORD
	:	

This is a decision on the Request to Withdraw as attorney or agent of record under 37 C.F.R. § 1.36(b), filed December 19, 2006.

The request is **APPROVED**.

A grantable request to withdraw as attorney/agent of record must be signed by every attorney/agent seeking to withdraw or contain a clear indication that one attorney is signing on behalf of another/others. A request to withdraw will not be approved unless at least 30 (thirty) days would remain between the date of approval and the later of the expiration date of a time to file a response or the expiration date of the maximum time period which can be extended under 37 C.F.R. § 1.136(a).

The request was signed by Fariborz Moazzam on behalf of all attorneys of record.

All attorneys/agents have been withdrawn.

Applicant is reminded that there is no attorney of record at this time.

The request to change the correspondence of record is not acceptable as the requested correspondence address is not that of: (1) the first named signing inventor; or (2) an intervening assignee of the entire interest under 37 C.F.R 3.71. All future communications from the Office will be directed to the first named signing inventor at the first copied address below until otherwise properly notified by the applicant.

There is no outstanding Office action at this time.

Telephone inquiries concerning this decision should be directed to Terri Williams at 571-272-2991.

T. Williams

Terri Williams
Petitions Examiner
Office of Petitions

cc: **Yanyun Zhao**
16785 SW Marcile Lane
Beaverton, OR 97007

cc: **Green & Green, Inc.**
Attn: Dr. Dennis Anderson
7625 NW McDonald Place
Corvallis, OR 97330

UNITED STATES PATENT AND TRADEMARK OFFICE

Commissioner for Patents
United States Patent and Trademark Office
P.O. Box 1450
Alexandria, VA 22313-1450
www.uspto.gov

COPY MAILED

JUL 06 2007

OFFICE OF PETITIONS

MORRISON & FOERSTER LLP
1650 TYSONS BOULEVARD
SUITE 400
MCLEAN, VA 22102

In re Application of	:	
Peter POCHMULLER	:	
Application No. 11/071,527	:	DECISION ON PETITION
Filed: March 4, 2005	:	TO WITHDRAW
Attorney Docket No. 543822012600	:	FROM RECORD
	:	

This is a decision on the Request to Withdraw as attorney or agent of record under 37 C.F.R. § 1.36(b), filed May 9, 2007.

The request is **APPROVED**.

A grantable request to withdraw as attorney/agent of record must be signed by every attorney/agent seeking to withdraw or contain a clear indication that one attorney is signing on behalf of another/others. A request to withdraw will not be approved unless at least 30 (thirty) days would remain between the date of approval and the later of the expiration date of a time to file a response or the expiration date of the maximum time period which can be extended under 37 C.F.R. § 1.136(a).

The request was signed by Deborah S. Gladstein on behalf of all attorneys of record who are associated with customer No. 25227.

All attorneys/agents associated with Customer Number 25227 have been withdrawn.

Applicant is reminded that there is no attorney of record at this time.

The request to change the correspondence of record is not acceptable as the requested correspondence address is not that of: (1) the first named signing inventor; or (2) an intervening assignee of the entire interest under 37 C.F.R 3.71. All future communications from the Office will be directed to the first named signing inventor at the first copied address below until otherwise properly notified by the applicant.

In order to request or take action in a patent matter, the assignee must establish its ownership of the patent to the satisfaction of the Director. In this regard, a Statement under 37 CFR 3.73(b) must have either: (i) documentary evidence of a chain of title from the original owner to the assignee (*e.g.*, copy of an executed assignment), and a statement affirming that the documentary evidence of the chain of title from the original owner to the assignee was or concurrently is being submitted for recordation pursuant to § 3.11; or (ii) a statement specifying where documentary evidence of a chain of title from the original owner to the assignee is recorded in the assignment records of the Office (*e.g.*, reel and frame number).

There are no pending Office actions at the present time.

Telephone inquiries concerning this decision should be directed to Diane Goodwyn at 571-272-6735.

April Wise
Petitions Examiner
Office of Petitions

cc: PETER POCHMULLER
BAUTZNER LANDSTRAUSE 8
DRESDEN, GERMANY

cc: GERO G. MCCLELLAN
PATTERSON & SHERIDAN, LLP
3040 POST OAK BOULEVARD,
SUITE 1500
HOUSTON, TX 77056

UNITED STATES PATENT AND TRADEMARK OFFICE

UNITED STATES DEPARTMENT OF COMMERCE
United States Patent and Trademark Office
Address: COMMISSIONER FOR PATENTS
P.O. Box 1450
Alexandria, Virginia 22313-1450
www.uspto.gov

APPLICATION NUMBER	FILING OR 371 (c) DATE	FIRST NAMED APPLICANT	ATTY. DOCKET NO./TITLE
11/071,527	03/04/2005	Peter Pochmuller	543822012600

CONFIRMATION NO. 8933

OC000000024354113

25227
MORRISON & FOERSTER LLP
1650 TYSONS BOULEVARD
SUITE 400
MCLEAN, VA 22102

Date Mailed: 06/14/2007

NOTICE REGARDING CHANGE OF POWER OF ATTORNEY

This is in response to the Power of Attorney filed 05/09/2007.

- The withdrawal as attorney in this application has been accepted. Future correspondence will be mailed to the new address of record. 37 CFR 1.33.

Office of Initial Patent Examination (571) 272-4000, or 1-800-PTO-9199
FORMER ATTORNEY/AGENT COPY

UNITED STATES PATENT AND TRADEMARK OFFICE

Commissioner for Patents
United States Patent and Trademark Office
P.O. Box 1450
Alexandria, VA 22313-1450
www.uspto.gov

COPY MAILED

JUL 19 2007

OFFICE OF PETITIONS

Morrison & Foerster, LLP
1650 Tysons Boulevard
Suite 400
Mclean, VA 22102

In re Application of	:	
Harald Seidl	:	
Application No. 11/071,536	:	DECISION ON PETITION
Filed: March 4, 2005	:	TO WITHDRAW
Attorney Docket No. 543822012000	:	FROM RECORD
	:	

This is a decision on the Request to Withdraw as attorney or agent of record under 37 C.F.R. § 1.36(b), filed April 13, 2007.

The request is **APPROVED**.

A grantable request to withdraw as attorney/agent of record must be signed by every attorney/agent seeking to withdraw or contain a clear indication that one attorney is signing on behalf of another/others. A request to withdraw will not be approved unless at least 30 (thirty) days would remain between the date of approval and the later of the expiration date of a time to file a response or the expiration date of the maximum time period which can be extended under 37 C.F.R. § 1.136(a).

The request was signed by Deborah S. Gladstein on behalf of all attorneys of record who are associated with customer No. 25227. All attorneys/agents associated with the Customer Number 25227 have been withdrawn.

Applicant is reminded that there is no attorney of record at this time.

The request to change the correspondence of record is not acceptable as the requested correspondence address is not that of (1) the first named signing inventor; or (2) an intervening assignee of the entire interest under 37 C.F.R. 3.71. Accordingly, all correspondence will be mailed to the sole inventor. A courtesy copy of this decision will be mailed to the address noted on the request to withdraw. If the attorneys associated with this firm desire to receive future correspondence regarding this application, the proper power of attorney documents must be submitted.

A non-final rejection was mailed on March 20, 2007. Failure to timely reply will result in the abandonment of this application.

Telephone inquiries concerning this decision should be directed to Kimberly Inabinet at 571-272-4618.

Frances Hicks
Petitions Examiner
Office of Petitions

cc: Harald Seidl
Boldmerstrabe 5
Feldkirchen, Germany 85622

cc: Eschweiler & Associates
National City Bank Building
629 Euclid Avenue, Suite 1000
Cleveland, OH 44114

UNITED STATES PATENT AND TRADEMARK OFFICE

UNITED STATES DEPARTMENT OF COMMERCE
United States Patent and Trademark Office
Address: COMMISSIONER FOR PATENTS
P.O. Box 1450
Alexandria, Virginia 22313-1450
www.uspto.gov

APPLICATION NUMBER	FILING OR 371 (c) DATE	FIRST NAMED APPLICANT	ATTY. DOCKET NO./TITLE
11/071,536	03/04/2005	Harald Seidl	543822012000

CONFIRMATION NO. 8945

OC000000024894917

25227
MORRISON & FOERSTER LLP
1650 TYSONS BOULEVARD
SUITE 400
MCLEAN, VA 22102

Date Mailed: 07/19/2007

NOTICE REGARDING CHANGE OF POWER OF ATTORNEY

This is in response to the Power of Attorney filed 04/13/2007.

- The withdrawal as attorney in this application has been accepted. Future correspondence will be mailed to the new address of record. 37 CFR 1.33.

Kimberly Inabinet
Office of Initial Patent Examination (571) 272-4000, or 1-800-PTO-9199
FORMER ATTORNEY/AGENT COPY

UNITED STATES PATENT AND TRADEMARK OFFICE

Commissioner for Patents
United States Patent and Trademark Office
P.O. Box 1450
Alexandria, VA 22313-1450
www.uspto.gov

COPY MAILED

MAY 22 2007

OFFICE OF PETITIONS

WILSON SONSINI GOODRICH & ROSATI
650 PAGE MILL ROAD
PALO ALTO CA 94304-1050

In re Application of	:	
Mark K. Kuiper, et al.	:	
Application No. 11/071,541	:	DECISION ON PETITION
Filed: March 2, 2005	:	TO WITHDRAW
Attorney Docket No. 29914-701.507	:	FROM RECORD
	:	

This is a decision on the Request to Withdraw as attorney or agent of record under 37 C.F.R. § 1.36(b) filed December 8, 2006.

The request is **DISMISSED** as moot.

A review of the file record indicates that the power of attorney to Wilson, Sonsini, Goodrich & Rosati has been revoked by the assignee of the patent application on January 5, 2007. Accordingly, the request to withdraw under 37 C.F.R. § 1.36(b) is moot.

All future communications from the Office will continue to be directed to the below-listed address until otherwise notified by applicant.

Telephone inquires concerning this decision should be directed to undersigned at 571-272-1642.

April M. Wise
Petitions Examiner
Office of Petitions

cc: SHAY LAW GROUP
2755 CAMPUS DRIVE
SUITE 210
SAN MATEO, CA 94403

UNITED STATES PATENT AND TRADEMARK OFFICE

UNITED STATES DEPARTMENT OF COMMERCE
United States Patent and Trademark Office
Address: COMMISSIONER FOR PATENTS
P.O. Box 1450
Alexandria, Virginia 22313-1450
www.uspto.gov

APPLICATION NUMBER	FILING OR 371 (c) DATE	FIRST NAMED APPLICANT	ATTY. DOCKET NO./TITLE
11/071,541	03/02/2005	Mark K. Kuiper	29914-701.507

CONFIRMATION NO. 8934

OC000000023907824

21971
WILSON SONSINI GOODRICH & ROSATI
650 PAGE MILL ROAD
PALO ALTO, CA 94304-1050

Date Mailed: 05/17/2007

NOTICE REGARDING CHANGE OF POWER OF ATTORNEY

This is in response to the Power of Attorney filed 01/05/2007.

- The Power of Attorney to you in this application has been revoked by the assignee who has intervened as provided by 37 CFR 3.71. Future correspondence will be mailed to the new address of record(37 CFR 1.33).

Office of Initial Patent Examination (571) 272-4000, or 1-800-PTO-9199
FORMER ATTORNEY/AGENT COPY

UNITED STATES PATENT AND TRADEMARK OFFICE

UNITED STATES DEPARTMENT OF COMMERCE
United States Patent and Trademark Office
Address: COMMISSIONER FOR PATENTS
P.O. Box 1450
Alexandria, Virginia 22313-1450
www.uspto.gov

SHAY GLENN LLP
2755 CAMPUS DRIVE
SUITE 210
SAN MATEO, CA 94403

Mail Date: 04/21/2010

Applicant	: Mark K. Kuiper	: DECISION ON REQUEST FOR
Patent Number	: 7674293	: RECALCULATION of PATENT
Issue Date	: 03/09/2010	: TERM ADJUSTMENT IN VIEW
Appliction No	: 11/071,541	: OF WYETH
Filed	: 03/02/2005	:
		:

The Patentee's Request for Recalculation is **DISMISSED.**

This Request is deemed ineligible for consideration for one or more of the following reasons:

(A). The patent for which PTA recalculation is requested is either a design or reissue application or is a reexamination proceeding;

(B). The patent for which PTA recalculation is requested resulted from a utility or plant application filed under 35 USC 111(a) before May 29, 2000 and no CPA filed in the application on/after May 29, 2000;

(C). The patent for which PTA recalculation is requested resulted from an international application in which the international filing date was before May 29, 2000 and no CPA filed in the application on/after May 29, 2000;

(D). The patent for which PTA recalculation is requested issued on/after March 2, 2010;

(E). The Request for Recalculation was filed more than 180 days after the grant date of the patent and the request was not filed within two months of a dismissal of a request for reconsideration of the of the patent term under 37 CFR 1.705(d);

(F). The Request for Recalculation is not solely limited to USPTO pre-Wyeth interpretation of 35 U.S.C. 154(b)(2)(A);

or

(G). A civil action was filed pursuant to 35 U.S.C. 154(b)(4)(A)concerning the same patent at issue in this request.

Patentee may file a reply to this decision dismissing the Request for Recalculation. Patentee must file such reply within one month or thirty days, whichever is longer, of the mail date of the decision dismissing the Request for Recalculation. No fee is required if patentee is asserting in the reply that the dismissal for ineligibility is improper.

Patentee should use document code PET.OP if electronically filing a reply to this dismissal. If the USPTO finds that the request was improperly deemed ineligible, the USPTO will mail applicant a recalculation determination.

Patentee should be aware that in order to preserve the right to review in the United States District Court for the District of Columbia of the USPTO patent term adjustment determination, patentee must ensure that he or she also take the steps required under 35 U.S.C. 154(b)(4)(A). Nothing in the request for recalculation should be construed as providing an alternative time frame for commencing a civil action under 35 U.S.C. 154 (b)(4)(A).

Any questions concerning this decision should be directed to the Office of Patent Legal Administration at 571-272-7702.

UNITED STATES PATENT AND TRADEMARK OFFICE

Commissioner for Patents
United States Patent and Trademark Office
P.O. Box 1450
Alexandria, VA 22313-1450
www.uspto.gov

HAYNES AND BOONE, LLP
901 MAIN STREET, SUITE 3100
DALLAS,TX 75202

COPY MAILED

JUN 0 9 2005

OFFICE OF PETITIONS

In re Application of :
Cook, et al. :
Application No. 11/071,557 :
Filed: March 3, 2005 :
Attorney Docket No. 25791.353 :

DECISION GRANTING PETITION

This is a decision on the petition filed May 19, 2005, requesting that the above-identified application retain the presently accorded a filing date of March 3, 2005, with page 2 of the specification, as part of the original disclosure.

On March 3, 2005, the above-identified application was filed. On May 4, 2005, the Office of Initial Patent Examination mailed a "Notice of Omitted Items of Nonprovisional Application" (the "Notice"), stating that the application had been accorded a filing date of March 3, 2005, however, page 2 of the specification appeared to have been omitted. The Notice allowed a non-extendable two-month period for reply beginning from the mailing date of the Notice.

In response, on May 19, 2005, applicants filed the present petition and a copy of an Office date-stamped postcard showing that, among other items, sixty-seven pages of the specification, including claims and abstract, were received on March 3, 2005.

Upon review of the record, page 2 of the specification has not been located among the application papers. However, the evidence is convincing that the application papers deposited March 3, 2005, included page 2 of the specification, which was subsequently misplaced by the Office. Therefore, the application, including page 2 of the specification was complete on filing and entitled to the presently accorded filing date of March 3, 2005.

Accordingly, the petition is granted; the Notice is vacated, accordingly.

The application file is being returned to the Office of Initial Patent Examination for further processing with the presently accorded filing date of March3, 2005, including page 2 of the specification received in duplicate on May 19, 2005.

Any inquiries related to this decision should be directed to the undersigned at (571)272-3222.

Kenya A. McLaughlin
Petitions Attorney
Office of Petitions

UNITED STATES PATENT AND TRADEMARK OFFICE

Commissioner for Patents
United States Patent and Trademark Office
P.O. Box 1450
Alexandria, VA 22313-1450
www.uspto.gov

COPY MAILED

JUN 29 2007

OFFICE OF PETITIONS

HAYNES AND BOONE, LLP
901 MAIN STREET, SUITE 3100
DALLAS TX 75202

In re Application of	:	
COOK, Robert Lance et al.	:	
Application No. 11/071,557	:	DECISION ON PETITION
Filed: March 03, 2005	:	TO WITHDRAW
Attorney Docket No. **25791.353**	:	FROM RECORD
	:	

This is a decision on the Request to Withdraw as attorney or agent of record under 37 C.F.R. § 1.36(b), filed April 19, 2007.

The request is **NOT APPROVED**.

A grantable request to withdraw as attorney/agent of record must be signed by every attorney/agent seeking to withdraw or contain a clear indication that one attorney is signing on behalf of another/others. A request to withdraw will not be approved unless at least 30 (thirty) days would remain between the date of approval and the later of the expiration date of a time to file a response or the expiration date of the maximum time period which can be extended under 37 C.F.R. § 1.136(a).

The request cannot be approved because no reasons for withdrawal have been provided. The Office cannot, at this time, determine whether practitioner's request is one of the mandatory or permissive reasons enumerated in 37 CFR 10.40. Any subsequent requests must include reasons for withdrawal. Please note that there is a space provided for on PTO/SB/83 (Request to Withdraw as Attorney or Agent) to supply practitioner's reasons.

All future communications from the Office will continue to be directed to the above-listed address until otherwise notified by applicant.

Telephone inquiries concerning this decision should be directed to Michelle R. Eason at 571-272- 4231.

T. Williams

Terri Williams
Petitions Examiner
Office of Petitions

cc: **KING & SPALDING, L.L.P.**
TODD MATTINGLY
1100 LOUISIANA STREET, SUITE 4000
HOUSTON, TX 77002

UNITED STATES PATENT AND TRADEMARK OFFICE

Commissioner for Patents
United States Patent and Trademark Office
P.O. Box 1450
Alexandria, VA 22313-1450
www.uspto.gov

JONES, WALKER, WAECHTER,
POITEVENT, CARRERE & DENEGRE, L.L.P.
5TH FLOOR, FOUR UNITED PLAZA
8555 UNITED PLAZA BOULEVARD
BATON ROUGE LA 70809

MAILED

SEP 24 2009

OFFICE OF PETITIONS

In re Application of	:	
Larry S. Miller et al	:	
Application No. 11/071,583	:	DECISION ON PETITION
Filed: March 4, 2005	:	
Attorney Docket No. 109034-00	:	

This is a decision on the petition under the unintentional provisions of 37 CFR 1.137(b), filed July 21, 2009, to revive the above-identified application.

The petition is **GRANTED**.

The two-month period for filing an appeal brief under 37 CFR 41.37 (accompanied by the fee required by 37 CFR 41.20(b)(2)), runs from the date of this decision.

This application became abandoned for failure to timely file a reply within the meaning of 37 CFR 1.113 to the final Office action of September 12, 2008. The proposed reply required for consideration of a petition to revive must be a Notice of Appeal (and appeal fee required by 37 CFR 41.20(b)(2)), an amendment that *prima facie* places the application in condition for allowance, a Request for Continued Examination (RCE) and submission (37 CFR 1.114), or the filing of a continuing application under 37 CFR 1.53(b). See MPEP 711.03(c)(III)(A)(2). No extensions of time pursuant to the provisions of 37 CFR 1.136(a) were obtained.

The petition satisfies the requirements of 37 CFR 1.137(b) in that petitioner has supplied (1) the reply in the form of a Notice of Appeal; (2) the petition fee of $810.00; and (3) a proper statement of unintentional delay.

An extension of time under 37 CFR 1.136 must be filed prior to the expiration of the maximum extendable period for reply. *See* In re Application of S., 8 USPQ2d 1630, 1631 (Comm'r Pats. 1988). Since the $310.00 extension of time fee submitted with the petition on July 21, 2009, was subsequent to the maximum extendable period for reply, this fee is unnecessary and will be credited to petitioner's deposit account.

Telephone inquiries concerning this decision should be directed to the undersigned at (571) 272-3208.

This application is being referred to Technology Center AU 3764 to await the filing of an appeal brief or for such other appropriate reply as may be submitted to continue prosecution of the application.

/KOC/
Karen Creasy
Petitions Examiner
Office of Petitions

UNITED STATES PATENT AND TRADEMARK OFFICE

Commissioner for Patents
United States Patent and Trademark Office
P.O. Box 1450
Alexandria, VA 22313-1450
www.uspto.gov

MAILED
FROM DIRECTORS OFFICE

MAY 05 2005

TECHNOLOGY CENTER 3600

GREENBERG TRAURIG LLP
2450 COLORADO AVENUE, SUITE 400E
SANTA MONICA, CA 90404

In re application of	:	**DECISION ON PETITION**
Kei Fung Choi	:	**TO MAKE SPECIAL**
Application No. 11/071,616	:	**(ACCELERATED**
Filed: March 03, 2005	:	**EXAMINATION)**
For: PROPULSION SYSTEM FOR MODEL AIRPLANE		

This is in response to the petition filed on March 30, 2005 to make the above-identified application special on the basis of special examining procedure for certain new applications - accelerated examination as set forth in MPEP § 708.02 VIII.

The requirements for granting special status under this section are: (A) a petition to make special accompanied by the fee set forth in 37 CFR 1.17(i); (B) all claims being directed to a single invention, or an election without traverse if the Office determines that all the claims are not directed to a single invention; (C) a statement that a pre-examination search was made listing the field of search; (D) one copy of each of the references deemed most closely related to the subject matter encompassed by the claims if said references are not already of record; and (E) a detailed discussion of how the claimed subject matter is patentable over the references in accordance with 37 CFR 1.111 (b) and (c).

Since all of the requirements for special status under MPEP § 708.02 VIII have been met, the petition is **GRANTED**.

The examiner is directed (1) to make an interference search for possible interfering applications, (2) to promptly examine this application out of turn, and (3) if any interfering application is discovered, to examine such application simultaneously and state in the first official letter of such application that it is being taken out of turn because of a possible interference.

Petitioner is advised that this application will continue to be special, throughout its entire prosecution and pendency, including interference or appeal, if any, only if petitioner makes a prompt ***bona fide*** effort, in response to each Office action, to place the application in condition for allowance, even if it is necessary to conduct an interview with the examiner to accomplish this purpose.

SUMMARY: Petition to Make Special **GRANTED**.

Kenneth J. Dorner
Special Programs Examiner
Technology Center 3600
(703) 308-0866

KJD/slb: 04/13/05

SPE RESPONSE FOR CERTIFICATE OF CORRECTION

DATE : 5/21/08

Paper No.: —

TO SPE OF : ART UNIT 2818

SUBJECT : Request for Certificate of Correction for Appl. No.: 11/071621 Patent No: 7342295 B2

A response is requested with respect to a request for a certificate of correction.

With respect to the change(s) requested to correct Office and/or Applicant's errors, should the patent read as shown in the certificate of correction attached herewith or the COCIN document(s), in IFW images for the above-identified patented application? No new matter should be introduced, nor should the scope or meaning of the claims be changed.

If the response is for an IFW, within **7** days, please complete and forward the response, to the employee (named below) via scanning into application images, using document code **COCX**.

If the response is for a paper file wrapper, please complete the response and forward the response with the paper file wrapper, to the employee (named below), within **7** days, to:

Certificates of Correction Branch (CofC)
South Tower - 9A22
Palm Location 7580

VIRGINIA TOLBERT
Certificates of Correction Branch
703-308-9390 ext. 113

Thank You For Your Assistance

The request for issuing the above-identified correction(s) is hereby:
Note your decision on the appropriate box.

- ☐ **Approved** — **All** changes apply.
- rsl ☑ **Approved in Part** — Specify below which changes **do not** apply.
- ☐ **Denied** — State the reasons for denial below.

Comments: Examiner does not have authority to change patent term from 53 days to 173 days. All other items in the certificate of correction are approved.

/Davienne Monbleau/
Supervisory Patent Examiner, Art Unit 2893

SPE **Art Unit** 2893

UNITED STATES PATENT AND TRADEMARK OFFICE

Commissioner for Patents
United States Patent and Trademark Office
P.O. Box 1450
Alexandria, VA 22313-1450
www.uspto.gov

CONOCOPHILIPS COMPANY - I.P. LEGAL
PO BOX 2443
BARTLESVILLE OK 74005

COPY MAILED

MAR 12 2008

OFFICE OF PETITIONS

In re Application of	:	
Cross et al.	:	
Application No. 11/071,633	:	DECISION ON PETITION
Filed: March 3, 2005	:	
Attorney Docket No. 34052US (KDK)	:	

This is a decision on the petition under the unintentional provisions of 37 CFR 1.137(b), filed February 11, 2008, to revive the above-identified application.

The petition is **GRANTED**.

The petition satisfies the requirements of 37 CFR 1.137(b) in that petitioner has supplied (1) the reply in the form of an Amendment, (2) the petition fee, and (3) a proper statement of unintentional delay.

Telephone inquiries concerning this decision should be directed to the undersigned at (571) 272-3206.

This matter is being referred to Technology Center 1793 for further examination on the merits.

Liana Walsh
Petitions Examiner
Office of Petitions

UNITED STATES PATENT AND TRADEMARK OFFICE

Commissioner for Patents
United States Patent and Trademark Office
P.O. Box 1450
Alexandria, VA 22313-1450
www.uspto.gov

PEARNE & GORDON LLP
1801 EAST 9TH STREET
SUITE 1200
CLEVELAND OH 44114-3108

COPY MAILED

OCT 22 2009

OFFICE OF PETITIONS

In re Patent No. 7,522,556	:	
Issue Date: April 21, 2009	:	
Application No. 11/071,641	:	ON PETITION
Filed: March 3, 2005	:	
Attorney Docket No. 9-15000-27US	:	

This is a decision on the petition filed August 6, 2009, which is being treated as a request under 37 CFR 3.81(b)[1] to correct the name of the assignee on the front page of the above-identified patent by way of a Certificate of Correction.

The request is GRANTED.

Telephone inquiries concerning this decision may be directed to the JoAnne Burke at (571) 272-4584. Inquiries regarding the issuance of a certificate of correction should be directed to the Certificate of Correction Branch at (571) 272-4200.

As authorized, the $130 fee for the petition under 37 CFR 3.81(b) has been assessed to petitioner's deposit account.

There is no indication that the petition is signed by a registered patent attorney or patent agent of record. However, in accordance with 37 CFR 1.34, the signature of Mr. Richard M. LaBarge appearing on the correspondence shall constitute a representation to the United States Patent and Trademark Office that he is authorized to represent the particular party in whose behalf he acts. If, Mr. Richard M. LaBarge desires to receive correspondence regarding this file, the appropriate power of attorney documents must be submitted. A courtesy copy of this decision is being mailed to Mr. Richard M. LaBarge, the petitioner herein. However, until otherwise instructed, all future correspondence regarding this application file will be directed solely to the above-noted correspondence address of record.

---

[1] *See* MPEP 1309, subsection II; and Official Gazette of June 22, 2004.

The Certificates of Correction Branch will be notified of this decision granting the petition under 37 CFR 3.81(b) and directing issuance of the requested Certificate of Correction.

JoAnne Burke
Petitions Examiner
Office of Petitions

cc: Richard M. LaBarge
Marshall, Gerstein & Borun LLP
233 S. Wacker Drive, Suite 6300
Sears Tower
Chicago, IL 60606-6357

UNITED STATES PATENT AND TRADEMARK OFFICE

UNITED STATES DEPARTMENT OF COMMERCE
United States Patent and Trademark Office
Address: COMMISSIONER FOR PATENTS
P.O. Box 1450
Alexandria, Virginia 22313-1450
www.uspto.gov

VIDAS, ARRETT & STEINKRAUS, P.A.
SUITE 400, 6640 SHADY OAK ROAD
EDEN PRAIRIE, MN 55344

Mail Date: 04/21/2010

Applicant	: Andrzej Malewicz	: DECISION ON REQUEST FOR
Patent Number	: 7632296	: RECALCULATION of PATENT
Issue Date	: 12/15/2009	: TERM ADJUSTMENT IN VIEW
Appliction No	: 11/071,644	: OF WYETH AND NOTICE OF INTENT TO
Filed	: 03/03/2005	: ISSUE CERTIFICATE OF CORRECTION
		:

The Request for Recalculation is **GRANTED** to the extent indicated.

The patent term adjustment has been determined to be **292** days. The USPTO will *sua sponte* issue a certificate of correction reflecting the amount of PTA days determined by the recalculation.

Prior to the issuance of the certificate of correction, the USPTO will afford patentee an opportunity to be heard and request reconsideration. Accordingly, patentee has **one month or thirty (30) days**, whichever is longer, to file a request for reconsideration of this patent term adjustment calculation. See 35 U.S.C. 154(b)(3)(B)(ii) and 37 CFR 1.322(a)(4). No extensions of time will be granted under 37 CFR 1.136.

Patentee should use document code PET.OP if electronically filing a request for reconsideration of this patent term adjustment calculation. The patentee must also include the information required by 37 CFR 1.705(b)(2) and the fee required by 37 CFR 1.18(e). If patentee does not file a timely request for reconsideration of this patent term adjustment calculation including the information required by 37 CFR 1.705(b)(2) and the fee required by 37 CFR 1.18(e), the USPTO will issue a certificate of correction reflecting the PTA determination noted above.

Patentee should be aware that in order to preserve the right to review in the United States District Court for the District of Columbia of the USPTO patent term adjustment determination, patentee must ensure that he or she also take the steps required under 35 U.S.C. 154(b)(4)(A) in a timely manner. Nothing in the request for recalculation should be construed as providing an alternative time frame for commencing a civil action under 35 U.S.C. 154(b)(4)(A).

Any questions concerning this decision should be directed to the Office of Patent Legal Administration at 571-272-7702.

UNITED STATES PATENT AND TRADEMARK OFFICE

Commissioner for Patents
United States Patent and Trademark Office
P.O. Box 1450
Alexandria, VA 22313-1450
www.uspto.gov

ALAN R. STEWART
MERCHANT & GOULD P.C.
P.O. BOX 2903
MINNEAPOLIS MN 55402-0903

COPY MAILED

FEB 04 2008

OFFICE OF PETITIONS

In re Application of :
Steven C. Zimmel :
Application No. 11/071,648 : ON PETITION
Filed: March 2, 2005 :
Attorney Docket No. 02316.1801USC1 :

This is a decision on the petition under 37 CFR 1.137(b), filed July 16, 2007, to revive the above-identified application.

The petition is **DISMISSED**.

Any request for reconsideration of this decision must be submitted within TWO (2) MONTHS from the mail date of this decision. Extensions of time under 37 CFR 1.136(a) are permitted. The reconsideration request should include a cover letter entitled "Renewed Petition under 37 CFR 1.137(b)." This is **not** a final agency action within the meaning of 5 U.S.C. § 704.

A grantable petition under 37 CFR 1.137(b)[1] must be accompanied by: (1) the required reply,[2] unless previously filed; (2) the petition fee as set forth in 37 CFR 1.17(m); (3) a statement that the entire delay in filing the required reply from the due date for the reply until the filing of a grantable petition pursuant to 37 CFR 1.137(b) was unintentional; and (4) any terminal disclaimer (and fee as set forth in 37 CFR 1.20(d)) required by

---

[1] As amended effective December 1, 1997. See Changes to Patent Practice and Procedure; Final Rule Notice, 62 Fed. Reg. 53131, 53194-95 (October 10, 1997), 1203 Off. Gaz. Pat. Office 63, 119-20 (October 21, 1997).

[2] In a nonprovisional application abandoned for failure to prosecute, the required reply may be met by the filing of a continuing application. In an application or patent, abandoned or lapsed for failure to pay the issue fee or any portion thereof, the required reply must be the payment of the issue fee or any outstanding balance thereof.

37 CFR 1.137(c). Where there is a question as to whether either the abandonment or the delay in filing a petition under 37 CFR 1.137 was unintentional, the Commissioner may require additional information. See MPEP 711.03(c)(III)(C) and (D). The instant petition lacks item(s) (1), (2) and (3) above.

The required reply to the Nonfinal Rejection of October 17, 2006, the required petition fee, and the statement that the entire delay in filing the required reply .... was unintentional were not submitted.

Petitioner should be aware that the current fee for a petition to revive under 37 CFR 1.137(b) is $1,540 and not the $500 submitted with the petition on July 16, 2007, (which was then $1,500).

Further correspondence with respect to this matter should be addressed as follows:

By mail: Mail Stop PETITIONS
Commissioner for Patents
Post Office Box 1450
Alexandria, VA 22313-1450

By hand: Customer Window located at:

Randolph Building
401 Dulany Street
Alexandria, VA 22314

By fax: (571) 273-8300
ATTN: Office of Petitions

Telephone inquiries concerning this decision should be directed to the undersigned at (571) 272-3208.

Karen Creasy

Karen Creasy
Petitions Examiner
Office of Petitions

UNITED STATES PATENT AND TRADEMARK OFFICE

Commissioner for Patents
United States Patent and Trademark Office
P.O. Box 1450
Alexandria, VA 22313-1450
www.uspto.gov

ALAN R. STEWART
MERCHANT & GOULD P.C.
P.O. BOX 2903
MINNEAPOLIS MN 55402-0903

COPY MAILED

AUG 0 4 2008

OFFICE OF PETITIONS

In re Application of	:
Steven C. Zimmel	:
Application No. 11/071,648	: DECISION GRANTING PETITION
Filed: March 2, 2005	: UNDER 37 CFR 1.137(b)
Attorney Docket No. 02316.1801USC1	:

This is a decision on the renewed petition under 37 CFR 1.137(b), filed March 20, 2008, to revive the above-identified application.

The petition is **GRANTED**.

The petition satisfies the conditions for revival pursuant to the provisions of 37 CFR 1.137(b) in that (1) the reply in the form of a supplemental response; (2) the petition fee; and (3) the required statement of unintentional delay have been received. Accordingly, the reply to the Nonfinal Rejection mailed October 17, 2006, is accepted as having been unintentionally delayed.

Telephone inquiries concerning this decision should be directed to the undersigned at (571) 272-3208.

This matter is being referred to Technology Center AU 2874.

Karen Creasy

Karen Creasy
Petitions Examiner
Office of Petitions

UNITED STATES PATENT AND TRADEMARK OFFICE

UNITED STATES DEPARTMENT OF COMMERCE
United States Patent and Trademark Office
Address: COMMISSIONER FOR PATENTS
P.O. Box 1450
Alexandria, Virginia 22313-1450
www.uspto.gov

APPL NO.	FILING OR 371 (c) DATE	ART UNIT	FIL FEE REC'D	ATTY.DOCKET NO	DRAWINGS	TOT CLMS	IND CLMS
11/071,696	03/03/2005	2131	500	029-04US1	3	11	3

CONFIRMATION NO. 5725

CORRECTED FILING RECEIPT

OC000000015904429

36522
MAGIQ TECHNOLOGIES, INC
171 MADISON AVENUE, SUITE 1300
NEW YORK, NY 10016-5110

Date Mailed: 04/28/2005

Receipt is acknowledged of this regular Patent Application. It will be considered in its order and you will be notified as to the results of the examination. Be sure to provide the U.S. APPLICATION NUMBER, FILING DATE, NAME OF APPLICANT, and TITLE OF INVENTION when inquiring about this application. Fees transmitted by check or draft are subject to collection. Please verify the accuracy of the data presented on this receipt. **If an error is noted on this Filing Receipt, please mail to the Commissioner for Patents P.O. Box 1450 Alexandria Va 22313-1450. Please provide a copy of this Filing Receipt with the changes noted thereon. If you received a "Notice to File Missing Parts" for this application, please submit any corrections to this Filing Receipt with your reply to the Notice. When the USPTO processes the reply to the Notice, the USPTO will generate another Filing Receipt incorporating the requested corrections (if appropriate).**

Applicant(s)

Jonathan Young, Newburyport, MA;
Michael J. LaGasse, Nahant, MA;

Assignment For Published Patent Application

MagiQ Technologies, Inc.

Power of Attorney:

Joseph Gortych--41791

Domestic Priority data as claimed by applicant

Foreign Applications

If Required, Foreign Filing License Granted: 04/15/2005

The country code and number of your priority application, to be used for filing abroad under the Paris Convention, is US11/071,696

Projected Publication Date: 09/07/2006

Non-Publication Request: No

Early Publication Request: No

** SMALL ENTITY **

Title

One-way synchronization of a two-way QKD system

Preliminary Class

380

LICENSE FOR FOREIGN FILING UNDER
Title 35, United States Code, Section 184
Title 37, Code of Federal Regulations, 5.11 & 5.15

GRANTED

The applicant has been granted a license under 35 U.S.C. 184, if the phrase "IF REQUIRED, FOREIGN FILING LICENSE GRANTED" followed by a date appears on this form. Such licenses are issued in all applications where the conditions for issuance of a license have been met, regardless of whether or not a license may be required as set forth in 37 CFR 5.15. The scope and limitations of this license are set forth in 37 CFR 5.15(a) unless an earlier license has been issued under 37 CFR 5.15(b). The license is subject to revocation upon written notification. The date indicated is the effective date of the license, unless an earlier license of similar scope has been granted under 37 CFR 5.13 or 5.14.

This license is to be retained by the licensee and may be used at any time on or after the effective date thereof unless it is revoked. This license is automatically transferred to any related applications(s) filed under 37 CFR 1.53(d). This license is not retroactive.

The grant of a license does not in any way lessen the responsibility of a licensee for the security of the subject matter as imposed by any Government contract or the provisions of existing laws relating to espionage and the national security or the export of technical data. Licensees should apprise themselves of current regulations especially with respect to certain countries, of other agencies, particularly the Office of Defense Trade Controls, Department of State (with respect to Arms, Munitions and Implements of War (22 CFR 121-128)); the Office of Export Administration, Department of Commerce (15 CFR 370.10 (j)); the Office of Foreign Assets Control, Department of Treasury (31 CFR Parts 500+) and the Department of Energy.

NOT GRANTED

No license under 35 U.S.C. 184 has been granted at this time, if the phrase "IF REQUIRED, FOREIGN FILING LICENSE GRANTED" DOES NOT appear on this form. Applicant may still petition for a license under 37 CFR 5.12, if a license is desired before the expiration of 6 months from the filing date of the application. If 6 months has lapsed from the filing date of this application and the licensee has not received any indication of a secrecy order under 35 U.S.C. 181, the licensee may foreign file the application pursuant to 37 CFR 5.15(b).

UNITED STATES PATENT AND TRADEMARK OFFICE

Commissioner for Patents
United States Patent and Trademark Office
P.O. Box 1450
Alexandria, VA 22313-1450
www.uspto.gov

KLARQUIST SPARKMAN LLP
121 S.W. SALMON STREET
SUITE 1600
PORTLAND OR 97204

COPY MAILED

JUL 26 2005

OFFICE OF PETITIONS

In re Application of
Gu, Ye et al.
Application No. 11/071,700
Filed: March 2, 2005
Attorney Dockete No.: 3382-53698-02

: DECISION ACCORDING STATUS
: UNDER 37 CFR 1.47(a)

This is in response to the petition filed June 29, 2005 (certificate of mail date, June 27, 2005) under 37 CFR 1.47(a).

The petition under 37 CFR 1.47(a) is **GRANTED**.

The above-identified application was filed on March 2, 2005, naming Ye Gu, Peter S. Ford, Holly Knight, Yaron Y. Goland and Paul J. Leach as joint inventors. The Oath or Declaration filed upon application was executed by all inventors except Yaron Y. Goland. Accordingly, on April 27, 2005, a "Notice To File Missing Parts of Application" was mailed, requiring *inter alia* a properly executed oath or declaration.

In response, the instant petition under 37 CFR 1.47(a) and late filing surcharge were filed, seeking status under 37 CFR 1.47(a) and claiming that joint inventor Goland refuses to sign the oath or declaration and thus by his actions, to cooperate with the filing of the instant application.

A grantable petition under 37 CFR 1.47(a) requires: (1) proof that the non-signing inventor cannot be reached or refuses to sign the oath or declaration after having been presented with the application papers (specification, claims and drawings); (2) an acceptable oath or declaration in compliance with 35 U.S.C. §§ 115 and 116; (3) the petition fee; and (4) a statement of the last known address of the non-signing inventor.

The petition bears proof that the application papers were forwarded to Mr. Goland, and that follow-up efforts to have him execute the oath or declaration also went unanswered.

The above-identified application and papers have been reviewed and found in compliance with 37 CFR 1.47(a). In view thereof, this application is hereby accorded Rule 1.47(a) status.

Thus, as provided in Rule 1.47c, this Office will forward notice of this application's filing to the non-signing inventor at the address given in the petition. Notice of the filing of this application will also be published in the Official Gazette.

Please be advised that effective November 22, 2004, the petition fee has been increased to $200.00. Therein, deposit account no. 02-4550 has been charged in the amount of $70.00 to make up the difference between that which was paid and that which is due pursuant to 37 CFR 1.17(g). See the Notice published in the Federal Register on September 21, 2004 and in the Official Gazette of the United States Patent and Trademark Office on October 12, 2004.

This matter is being referred to Technology Center 2661 for examination in due course.

Telephone inquiries concerning this matter may be directed to the undersigned Petitions Attorney at (571) 272-3212.

Patricia Faison-Ball

Patricia Faison-Ball
Senior Petitions Attorney
Office of Petitions

UNITED STATES PATENT AND TRADEMARK OFFICE

UNITED STATES DEPARTMENT OF COMMERCE
United States Patent and Trademark Office
Address: COMMISSIONER FOR PATENTS
P.O. Box 1450
Alexandria, Virginia 22313-1450
www.uspto.gov

THE FARRELL LAW FIRM, LLP
290 Broadhollow Road
Suite 210E
Melville, NY 11747

Mail Date: 04/21/2010

Applicant	: Hyun-Jeong Kang	: DECISION ON REQUEST FOR
Patent Number	: 7623864	: RECALCULATION of PATENT
Issue Date	: 11/24/2009	: TERM ADJUSTMENT IN VIEW
Appliction No	: 11/071,743	: OF WYETH AND NOTICE OF INTENT TO
Filed	: 03/03/2005	: ISSUE CERTIFICATE OF CORRECTION
		:

The Request for Recalculation is **GRANTED** to the extent indicated.

The patent term adjustment has been determined to be **64** days. The USPTO will *sua sponte* issue a certificate of correction reflecting the amount of PTA days determined by the recalculation.

Prior to the issuance of the certificate of correction, the USPTO will afford patentee an opportunity to be heard and request reconsideration. Accordingly, patentee has **one month or thirty (30) days**, whichever is longer, to file a request for reconsideration of this patent term adjustment calculation. See 35 U.S.C. 154(b)(3)(B)(ii) and 37 CFR 1.322(a)(4). No extensions of time will be granted under 37 CFR 1.136.

Patentee should use document code PET.OP if electronically filing a request for reconsideration of this patent term adjustment calculation. The patentee must also include the information required by 37 CFR 1.705(b)(2) and the fee required by 37 CFR 1.18(e). If patentee does not file a timely request for reconsideration of this patent term adjustment calculation including the information required by 37 CFR 1.705(b)(2) and the fee required by 37 CFR 1.18(e), the USPTO will issue a certificate of correction reflecting the PTA determination noted above.

Patentee should be aware that in order to preserve the right to review in the United States District Court for the District of Columbia of the USPTO patent term adjustment determination, patentee must ensure that he or she also take the steps required under 35 U.S.C. 154(b)(4)(A) in a timely manner. Nothing in the request for recalculation should be construed as providing an alternative time frame for commencing a civil action under 35 U.S.C. 154(b)(4)(A).

Any questions concerning this decision should be directed to the Office of Patent Legal Administration at 571-272-7702.

UNITED STATES PATENT AND TRADEMARK OFFICE

Commissioner for Patents
United States Patent and Trademark Office
P.O. Box 1450
Alexandria, VA 22313-1450
www.uspto.gov

DORITY & MANNING, P.A.
P.O. BOX 1449
GREENVILLE, SC 29602-1449

COPY MAILED

MAR 21 2006

OFFICE OF PETITIONS

In re Application of :
Frank S. Hada et al :
Application No. 11/071,744 : ON PETITION
Filed: March 3, 2005 :
Attorney Docket No. KCX-796-DIV (19737.1)

This is a decision on the petition filed, March 13, 2006 under 37 CFR 1.313(c)(2) to withdraw the above-identified application from issue after payment of the issue fee.

The petition is **GRANTED**.

The above-identified application is withdrawn from issue for consideration of a submission under 37 CFR 1.114 (request for continued examination). See 37 CFR 1.313(c)(2).

Petitioner is advised that the issue fee paid on February 22, 2006 in the above-identified application cannot be refunded. If, however, the above-identified application is again allowed, petitioner may request that it be applied towards the issue fee required by the new Notice of Allowance.[1]

Telephone inquiries should be directed to Irvin Dingle at (571) 272-3210.

This matter is being referred to Technology Center AU 3749 for processing of the request for continued examination under 37 CFR 1.114 and for consideration of the concurrently filed Information Disclosure Statement.

Irvin Dingle
Petitions Examiner
Office of Petitions

---

[1] The request to apply the issue fee to the new Notice may be satisfied by completing and returning the new Issue Fee Transmittal Form PTOL-85(b), which includes the following language thereon: Commissioner for Patents is requested to apply the Issue Fee and Publication Fee (if any) or re-apply any previously paid issue fee to the application identified above. Petitioner is advised that, whether a fee is indicated as being due or not, the Issue Fee Transmittal Form **must** be completed and timely submitted to avoid abandonment. Note the language in bold text on the first page of the Notice of Allowance and Fee(s) Due (PTOL-85).

SPE RESPONSE FOR CERTIFICATE OF CORRECTION

Paper No.: ____

DATE : 2/20/08

TO SPE OF : ART UNIT 1647

SUBJECT : Request for Certificate of Correction for Appl. No.: 11/071761 Patent No: 7276354 B2

A response is requested with respect to a request for a certificate of correction.

With respect to the change(s) requested to correct Office and/or Applicant's errors, should the patent read as shown in the certificate of correction attached herewith or the COCIN document(s), in IFW images for the above-identified patented application? No new matter should be introduced, nor should the scope or meaning of the claims be changed.

If the response is for an IFW, within 7 days, please complete and forward the response, to the employee (named below) via scanning into application images, using document code **COCX**.

If the response is for a paper file wrapper, please complete the response and forward the response with the paper file wrapper, to the employee (named below), within 7 days, to:

Certificates of Correction Branch (CofC)
South Tower - 9A22
Palm Location 7580

VIRGINIA TOLBERT
Certificates of Correction Branch
703-308-9390 ext. 113

Thank You For Your Assistance

The request for issuing the above-identified correction(s) is hereby:
Note your decision on the appropriate box.

- ☐ **Approved** — All changes apply.
- ☑ **Approved in Part** — Specify below which changes **do not** apply.
- ☐ **Denied** — State the reasons for denial below.

Comments: Cannot enter changes to "Column 56". Not clear at which line said change needs to be made.

SPE

1647
Art Unit

PTOL-306 (REV. 7/03)

U.S. DEPARTMENT OF COMMERCE Patent and Trademark Office

UNITED STATES PATENT AND TRADEMARK OFFICE

Commissioner for Patents
United States Patent and Trademark Office
P.O. Box 1450
Alexandria, VA 22313-1450
www.uspto.gov

KONRAD RAYNES & VICTOR, LLP
315 S. BEVERLY DRIVE
210
BEVERLY HILLS, CA 90212

COPY MAILED
SEP 25 2008

In re Application of	:	
Hugh Michael Oppen Pratt	:	
Application No. 11/071,763	:	DECISION ON PETITION
Filed: March 2, 2005	:	TO WITHDRAW
Attorney Docket No. 83.0001 (old) 8269-84699	:	FROM RECORD
	:	

This is a decision on the Request to Withdraw as attorney or agent of record under 37 C.F.R. § 1.36(b), filed September 28, 2005.

The request is **MOOT**.

A review of the file record indicates that the power of attorney to KONRAD RAYNES & VICTOR, LLP has been revoked by the assignee of the patent application on January 19, 2006. Accordingly, the request to withdraw under 37 C.F.R. § 1.36(b) is moot.

All future communications from the Office will continue to be directed to the correspondence address of record until otherwise notified by applicant.

Telephone inquires concerning this decision should be directed to the undersigned at 571-272-4914.

Ramesh Krishnamurthy

Ramesh Krishnamurthy
Petitions Examiner
Office of Petitions

UNITED STATES PATENT AND TRADEMARK OFFICE

Commissioner for Patents
United States Patent and Trademark Office
P.O. Box 1450
Alexandria, VA 22313-1450
www.uspto.gov

COPY MAILED

AUG 01 2006

OFFICE OF PETITIONS

NIXON PEABODY, LLP
401 9TH STREET, NW
SUITE 900
WASHINGTON DC 20004-2128

In re Application of	:	
McDowell, et al.	:	
Application No. 11/071,778	:	DECISION ON PETITION
Filed: March 4, 2005	:	TO WITHDRAW
Attorney Docket No. 002616-8	:	FROM RECORD
	:	

This is a decision on the Request to Withdraw as attorney or agent of record under 37 C.F.R. § 1.36(b), filed January 17, 2006.

The request is **APPROVED**.

A grantable request to withdraw as attorney/agent of record must be signed by every attorney/agent seeking to withdraw or contain a clear indication that one attorney is signing on behalf of another/others. A request to withdraw will not be approved unless at least 30 (thirty) days would remain between the date of approval and the later of the expiration date of a time to file a response or the expiration date of the maximum time period which can be extended under 37 C.F.R. § 1.136(a).

The request was signed by Marc S. Kaufman on behalf of all attorneys of record who are associated with customer No. 22204.

All attorneys/agents associated with the Customer Number 22204 have been withdrawn.

Applicant is reminded that there is no attorney of record at this time.

All future correspondence will be directed to the first named inventor Joe Smith at the address indicated below The request to change the correspondence of record is not acceptable as the requested correspondence address is not that of: (1) the first named signing inventor; or (2) an intervening assignee of the entire interest under 37 C.F.R 3.71. All future communications from the Office will be directed to the first named signing inventor at the first copied address below until otherwise properly notified by the applicant.

Telephone inquiries concerning this decision should be directed to April Wise at 571-272-1642.

Denise Pothier
Petitions Examiner
Office of Petitions

cc: Mark E. McDowell
6801 Sue Paige Court
Springfield, VA 22152

cc: Evan R. Smith Senior Counsel
Blank Rome LLP
Watergate, Eleventh Floor
600 New Hampshire Avenue, NW
Washington, DC 20037

UNITED STATES PATENT AND TRADEMARK OFFICE

Commissioner for Patents
United States Patent and Trademark Office
P.O. Box 1450
Alexandria, VA 22313-1450
www.uspto.gov

Mark E. McDowell
6801 Sue Paige Court
Springfield VA 22152

COPY MAILED

OCT 2 9 2009

OFFICE OF PETITIONS

In re Application of	:	
Mark E. MCDOWELL et al.	:	
Application No. 11/071,778	:	DECISION ON PETITION
Filed: March 04, 2005	:	
Attorney Docket No.	:	

This is a decision on the petition, filed August 12, 2009, which is being treated as a petition under 37 CFR 1.181 (no fee) requesting withdrawal of the holding of abandonment in the above-identified application.

The petition is **GRANTED**.

This application was held abandoned for failure to reply to the Requirement for Restriction/Election mailed March 13, 2009, which set a three (3) month shortened statutory period for reply. A Notice of Abandonment was mailed on July 15, 2009.

Petitioner asserts that the Patent Office issued the Notice of Abandonment in error.

A review of the written record indicates an irregularity in the mailing of the Notice of Abandonment of July 15, 2009. In this regard, a reply to the Requirement for Restriction/Election and extension of time fees were timely filed on September 14, 2009. Accordingly, as the Notice of Abandonment was inadvertently issued, the Notice of Abandonment mailed July 15, 2009 is hereby vacated and the holding of abandonment withdrawn.

There is no indication that the person signing the petition was ever given a power of attorney to prosecute the application. If the person signing the petition desires to receive future correspondence regarding this application, the appropriate power of attorney document must be submitted. While a courtesy copy of this decision is being mailed to the person signing the petition, all future correspondence will be directed to the address currently of record until appropriate instructions are received.

This application is being referred to the Technology Center Art Unit 2444 for appropriate action on the concurrently filed amendment.

Telephone inquiries concerning this decision should be directed to Niketa I. Patel at 571-272-4156 or in her absence, the undersigned at 571-272-7099.

David Bucci
Petitions Examiner
Office of Petitions

CC:

DAVID J. EDMONDSON
BLANK ROME LLP
WATERGATE
600 NEW HAMPSHIRE AVENUE, N.W.
WASHINGTON, DC 20037

UNITED STATES PATENT AND TRADEMARK OFFICE

Commissioner for Patents
United States Patent and Trademark Office
P.O. Box 1450
Alexandria, VA 22313-1450
www.uspto.gov

WINSTEAD SECHREST & MINICK P.C.
P.O. Box 50784
Dallas, TX 75201

COPY MAILED
SEP 1 1 2006
OFFICE OF PETITIONS

In re Application of
Homer L. **WEBB**
Application No. 11/071,811
Filed: March 3, 2005
Attorney Docket No. 39888-P005US

DECISION ON PETITION TO WITHDRAW FROM RECORD

This is a decision on the Request to Withdraw as attorney or agent of record under 37 C.F.R. § 1.36(b), filed July 8, 2005.

The request is **APPROVED**.

A grantable request to withdraw as attorney/agent of record must be signed by every attorney/agent seeking to withdraw or contain a clear indication that one attorney is signing on behalf of another/others. A request to withdraw will not be approved unless at least 30 (thirty) days would remain between the date of approval and the later of the expiration date of a time to file a response or the expiration date of the maximum time period which can be extended under 37 C.F.R. § 1.136(a).

The request was signed by Ross Spencer Garsson on behalf of all attorneys of record. All attorneys/agents associated have been withdrawn. Applicant is reminded that there is no attorney of record at this time.

All future correspondence will be directed to the sole named inventor Homer L Webb at the address indicated below.

Telephone inquiries concerning this decision should be directed to Monica A. Graves at 571-272-7253.

Denise Pothier
Petitions Examiner
Office of Petitions

cc: **Homer Lee Webb**
25 Dawson Road
Round Rock, TX 78664

UNITED STATES PATENT AND TRADEMARK OFFICE

UNITED STATES DEPARTMENT OF COMMERCE
United States Patent and Trademark Office
Address: COMMISSIONER FOR PATENTS
P.O. Box 1450
Alexandria, Virginia 22313-1450
www.uspto.gov

APPLICATION NUMBER	FILING OR 371 (c) DATE	FIRST NAMED APPLICANT	ATTY. DOCKET NO./TITLE
11/071,811	03/03/2005	Homer L. Webb	39888-P005US

CONFIRMATION NO. 3781

OC000000020351781

47744
ROSS SPENCER GARSSON
WINSTEAD SECHREST & MINICK P.C.
P. O. BOX 50784
DALLAS, TX 75201

Date Mailed: 09/08/2006

NOTICE REGARDING CHANGE OF POWER OF ATTORNEY

This is in response to the Power of Attorney filed 07/08/2005.

- The withdrawal as attorney in this application has been accepted. Future correspondence will be mailed to the new address of record. 37 CFR 1.33.

MONICA A GRAVES
OP (571) 272-7253

FORMER ATTORNEY/AGENT COPY

UNITED STATES PATENT AND TRADEMARK OFFICE

UNITED STATES DEPARTMENT OF COMMERCE
United States Patent and Trademark Office
Address: COMMISSIONER FOR PATENTS
P.O. Box 1450
Alexandria, Virginia 22313-1450
www.uspto.gov

LOUIS J. HOFFMAN, P.C.
11811 North Tatum Boulevard, Suite 2100
Phoenix, AZ 85028

Mail Date: 04/20/2010

Applicant	: Gary Kramer	: DECISION ON REQUEST FOR
Patent Number	: 7616834	: RECALCULATION of PATENT
Issue Date	: 11/10/2009	: TERM ADJUSTMENT IN VIEW
Appliction No	: 11/071,847	: OF WYETH AND NOTICE OF INTENT TO
Filed	: 03/02/2005	: ISSUE CERTIFICATE OF CORRECTION
		:

The Request for Recalculation is **GRANTED** to the extent indicated.

The patent term adjustment has been determined to be **1139** days. The USPTO will *sua sponte* issue a certificate of correction reflecting the amount of PTA days determined by the recalculation.

Prior to the issuance of the certificate of correction, the USPTO will afford patentee an opportunity to be heard and request reconsideration. Accordingly, patentee has **one month or thirty (30) days**, whichever is longer, to file a request for reconsideration of this patent term adjustment calculation. See 35 U.S.C. 154(b)(3)(B)(ii) and 37 CFR 1.322(a)(4). No extensions of time will be granted under 37 CFR 1.136.

Patentee should use document code PET.OP if electronically filing a request for reconsideration of this patent term adjustment calculation. The patentee must also include the information required by 37 CFR 1.705(b)(2) and the fee required by 37 CFR 1.18(e). If patentee does not file a timely request for reconsideration of this patent term adjustment calculation including the information required by 37 CFR 1.705(b)(2) and the fee required by 37 CFR 1.18(e), the USPTO will issue a certificate of correction reflecting the PTA determination noted above.

Patentee should be aware that in order to preserve the right to review in the United States District Court for the District of Columbia of the USPTO patent term adjustment determination, patentee must ensure that he or she also take the steps required under 35 U.S.C. 154(b)(4)(A) in a timely manner. Nothing in the request for recalculation should be construed as providing an alternative time frame for commencing a civil action under 35 U.S.C. 154(b)(4)(A).

Any questions concerning this decision should be directed to the Office of Patent Legal Administration at 571-272-7702.

UNITED STATES PATENT AND TRADEMARK OFFICE

UNITED STATES DEPARTMENT OF COMMERCE
United States Patent and Trademark Office
Address: COMMISSIONER FOR PATENTS
P.O. Box 1450
Alexandria, Virginia 22313-1450
www.uspto.gov

LOUIS J. HOFFMAN, P.C.
11811 North Tatum Boulevard, Suite 2100
Phoenix, AZ 85028

Mail Date: 05/17/2010

Applicant : Gary Kramer
Patent Number : 7616834
Issue Date : 11/10/2009
Application No : 11/071,847
Filed : 03/02/2005

: NOTICE CONCERNING IMPROPER
: CALCULATION OF PATENT TERM
: ADJUSTMENT BASED UPON USPTO
: IMPROPERLY MEASURING REDUCTION
: PERIOD UNDER 37 CFR 1.704(c)(10).

The United States Patent and Trademark Office (USPTO) discovered that in processing the recent recalculation decisions mailed in response to patentee's filed Request for Recalculation of Patent Term Adjustment in view of Wyeth, the USPTO improperly measured the reduction period for reductions under 37 CFR 1.704(c)(10). Pursuant to 37 CFR 1.704(c)(10), patentee's reduction begins on the date of filing the amendment under 37 CFR 1.312 ("1.312 amendment") or other related paper and ends on the date that the Office mails a response to the filing of the 1.312 amendment or other paper. It has been discovered that during the recalculation, the calculation failed to the limit the reduction to the mail date of the response to the 1.312 amendment or other paper. Accordingly, patentee's reductions were greater than warranted.

This notice **VACATES** the previous GRANTED request for recalculation and provides patentee with a revised GRANTED recalculation.

The patent term adjustment has been determined to be **1215** days. The USPTO will *sua sponte* issue a certificate of correction reflecting the amount of patent term adjustment (PTA) days determined by the recalculation.

Prior to the issuance of the certificate of correction, the USPTO will afford patentee an opportunity to be heard and request reconsideration. Accordingly, patentee has **one month or thirty (30) days** from the mail date of this notice, whichever is longer, to file a request for reconsideration of this PTA calculation. See 35 U.S.C. § 154(b)(3)(B)(ii) and 37 CFR 1.322(a)(4).

Patentee should use document code PET.OP if electronically filing a request for reconsideration of this PTA calculation. The patentee must also include the information required by 37 CFR 1.705(b)(2), and the fee required by 37 CFR 1.18(e). If patentee does not file a timely request for reconsideration of this PTA calculation, including the information required by 37 CFR 1.705(b)(2) and the fee required by 37 CFR 1.18(e), the USPTO will issue a certificate of correction reflecting the PTA determination noted above.

Patentee should be aware that in order to preserve the right of review of the USPTO's PTA determination in the United States District Court for the District of Columbia, patentee must ensure that the steps required under 35 U.S.C. § 154 (b)(4) are taken in a timely manner. Nothing in the request for recalculation should be construed as providing an alternative time frame for commencing a civil action under 35 U.S.C. § 154(b)(4).

Remarks

Applicant herewith submits three copies of color figures, one set of black and white copies, and a petition under 37 C.F.R. § 1.84 with the requisite fee of $130.00 requesting that color photographs be substituted for Figures 11A-1, 11A-2, 11B, 12A, 12B, 12C, 13, and 14 as submitted with the Application as filed herewith.

Respectfully submitted,

Date: March 3, 2005

Cynthia B. Rothschild, Esq.
Reg. No. 47,040
Attorney for Applicants

Kilpatrick Stockton LLP
1001 W. Fourth Street
Winston-Salem, NC 27101
336.607.7300
336.607.7500 (facsimile)

39892-307634
WINLIB01:1121191.1

UNITED STATES PATENT AND TRADEMARK OFFICE

Commissioner for Patents
United States Patent and Trademark Office
P.O. Box 1450
Alexandria, VA 22313-1450
www.uspto.gov

KILPATRICK STOCKTON LLP
1001 WEST FOURTH STREET
WINSTON-SALEM NC 27101

In re Application of	:
Rublee et al.	:
Serial No.: 11/071,849	: PETITION TO MAKE SPECIAL
Filed: March 3, 2005	:
Attorney Docket No.: 39892-307634	:

This is in response to applicants' petition filed May 13, 2005, to make the above-identified application special under the provisions of 37 CFR 1.102(d), based on inventions that contribute to maintenance of environmental quality (M.P.E.P. 708.02, V) and countering terrorism (M.P.E.P. 708.02, XI). The $130.00 petition fee as required by 37 CFR 1.17(h) for countering terrorism will be charged to applicants' Deposit Account No. 16-1435, as directed .

Applicant has satisfied the provisions set forth in M.P.E.P. 708.02, V and 708.02, XI. Therefore, the petition is **GRANTED**.

The application will be forwarded the examiner for action on the merits commensurate with this decision.

Should there be any questions with regard to this letter please contact Marianne C. Seidel by letter addressed to the Director, Technology Center 1600, P.O. Box 1450, Alexandria, VA 22313-1450, or by telephone at 571-272-0584 or by facsimile transmission at the general Office facsimile number, (703) 872-9306.

Marianne C. Seidel

Marianne C. Seidel
Special Program Examiner
Technology Center 1600

UNITED STATES PATENT AND TRADEMARK OFFICE

Commissioner for Patents
United States Patent and Trademark Office
P.O. Box 1450
Alexandria, VA 22313-1450
www.uspto.gov

~~JUN 10 2005~~

JUN 10 2005

~~JUN 10 2005~~

KILPATRICK STOCKTON LLP
1001 WEST FOURTH STREET
WINSTON-SALEM NC 27101

In re Application of	:
Rublee et al.	:
Serial No.: 11/071,849	: PETITION TO MAKE SPECIAL
Filed: March 3, 2005	:
Attorney Docket No.: 39892-307634	:

This is in response to applicants' petition filed May 13, 2005, to make the above-identified application special under the provisions of 37 CFR 1.102(d), based on inventions that contribute to maintenance of environmental quality (M.P.E.P. 708.02, V) and countering terrorism (M.P.E.P. 708.02, XI). The $130.00 petition fee as required by 37 CFR 1.17(h) for countering terrorism will be charged to applicants' Deposit Account No. 16-1435, as directed .

Applicant has satisfied the provisions set forth in M.P.E.P. 708.02, V and 708.02, XI. Therefore, the petition is **GRANTED**.

The application will be forwarded the examiner for action on the merits commensurate with this decision.

Should there be any questions with regard to this letter please contact Marianne C. Seidel by letter addressed to the Director, Technology Center 1600, P.O. Box 1450, Alexandria, VA 22313-1450, or by telephone at 571-272-0584 or by facsimile transmission at the general Office facsimile number, (703) 872-9306.

Marianne C. Seidel

Marianne C. Seidel
Special Program Examiner
Technology Center 1600

UNITED STATES PATENT AND TRADEMARK OFFICE

Commissioner for Patents
United States Patent and Trademark Office
P.O. Box 1450
Alexandria, VA 22313-1450
www.uspto.gov

MAILED

MAR 16 2010

OFFICE OF PETITIONS

PHILIP S. JOHNSON
JOHNSON & JOHNSON
ONE JOHNSON & JOHNSON PLAZA
NEW BRUNSWICK NJ 08933-7003

In re Patent No. 7,645,475
Issued: January 12, 2010
Application No. 11/071,857
Filed: March 3, 2005
For: DEVICES HAVING A TEXTURED SURFACE

: DECISION ON APPLICATION FOR
: PATENT TERM ADJUSTMENT and
: NOTICE OF INTENT TO ISSUE
: CERTIFICATE OF CORRECTION

This is a decision on the petition filed on January 11, 2010, which is being properly treated as a petition under 37 CFR 1.705(d), requesting recalculation of the patent term adjustment under 35 USC 154(b).

The petition to correct the patent term adjustment indicated on the above-identified patent to indicate that the term of the above-identified patent is extended or adjusted by 1,129 days is **GRANTED**.

As the period from the filing date of the request for continued examination (RCE) to the issue date of the patent is not included in the "B" delay period, the over three year period begins on March 4, 2008 and ends on June 29, 2009, the day before the RCE was filed, and not June 30, 2009, the day of filing of the RCE. See, 35 U.S.C. 154(b)(1)(B)(i). Thus, the over 3 year period is 483 days. However, the period of "A" delay (751 days) and the period of "B" delay share 81 overlapping days (from March 4, 2008 to May 23, 2008). As such, the correct patent term adjustment is 1,129 days, not 727 days.

The Office will *sua sponte* issue a certificate of correction. Pursuant to 37 CFR 1.322, the Office will not issue a certificate of correction without first providing assignee or patentee an opportunity to be heard. Accordingly, patentees are given **one (1) month or thirty (30) days**, whichever is longer, from the mail date of this decision to respond. No extensions of time will be granted under § 1.136. See, 37 CFR 1.323(a)(4).

The Office acknowledges submission of the $200.00 fee set forth in 37 CFR 1.18(e). No additional fees are required.

The application is being forwarded to the Certificates of Corrections Branch for issuance of a certificate of correction. The Office will issue a certificate of correction indicating that the term of the above-identified patent is extended or adjusted by 1,129 days.

Telephone inquiries specific to this matter should be directed to the undersigned at (571) 272-3205.

/ALESIA M. BROWN/

Alesia M. Brown
Senior Petitions Attorney
Office of Petitions

Enclosure: Copy of DRAFT Certificate of Correction

UNITED STATES PATENT AND TRADEMARK OFFICE

CERTIFICATE OF CORRECTION

PATENT : 7,645,475 B2

DATED : **January 12, 2010** **DRAFT**

INVENTOR(S) : Prewett

It is certified that error appears in the above-identified patent and that said Letters Patent is hereby corrected as shown below:

On the cover page,

[*] Notice: Subject to any disclaimer, the term of this patent is extended or adjusted under 35 USC 154(b) by 727 days

Delete the phrase "by 727 days" and insert – by 1,129 days--

UNITED STATES PATENT AND TRADEMARK OFFICE

COMMISSIONER FOR PATENTS
UNITED STATES PATENT AND TRADEMARK OFFICE
P.O. BOX 1450
ALEXANDRIA, VA 22313-1450
www.uspto.gov

SIERRA PATENT GROUP, LTD.
1657 HWY 395, SUITE 202
MINDEN, NV 89423

COPY MAILED

JUL 17 2007

OFFICE OF PETITIONS

In re Application of	:
Forest J. Brown et al	:
Application No. 11/071,865	: DECISION ON PETITION
Filed: March 2, 2005	: UNDER 37 CFR 1.78(a)(3)
Attorney Docket No. PIPE-004	:

This is a decision on the petition under 37 CFR 1.78(a)(3), filed June 8, 2007, to accept an unintentionally delayed claim under 35 U.S.C. §120 for the benefit of priority to prior-filed nonprovisional Application No. 10/825,789, filed April 16, 2004, as set forth in the concurrently filed amendment and Application Data Sheet.

The petition is **GRANTED.**

A petition for acceptance of a claim for late priority under 37 CFR 1.78(a)(3) is only applicable to those applications filed on or after November 29, 2000. Further, the petition is appropriate only after the expiration of the period specified in 37 CFR 1.78(a)(2)(ii). In addition, the petition under 37 CFR 1.78(a)(3) must be accompanied by:

(1) the reference required by 35 U.S.C. § 120 and 37 CFR 1.78(a)(2)(i) and (iii) of the prior-filed application, unless previously submitted;
(2) the surcharge set forth in § 1.17(t); and
(3) a statement that the entire delay between the date the claim was due under 37 CFR 1.78(a)(2)(ii) and the date the claim was filed was unintentional. The Director may require additional information where there is a question whether the delay was unintentional.

All of the above requirements having been satisfied, the late claim for benefit of priority under 35 U.S.C. § 120 is accepted as being unintentionally delayed.

The granting of the petition to accept the delayed benefit claim to the prior-filed application under 37 CFR 1.78(a)(3) should not be construed as meaning that this application is entitled to the benefit of the prior-filed application. In order for this application to be entitled to the benefit of the prior-filed application, all other requirements under 35 U.S.C. § 120 and 37

CFR 1.78(a)(1) and (a)(2) must be met. Similarly, the fact that the corrected Filing Receipt accompanying this decision on petition includes the prior-filed application should not be construed as meaning that applicant is entitled to the claim for benefit of priority to the prior-filed application noted thereon. Accordingly, the examiner will, in due course, consider this benefit claim and determine whether the application is entitled to the benefit of the earlier filing date.

37 CFR § 1.78(a)(3) requires a statement that the entire delay between the date the claim was due under 37 CFR § 1.78(a)(2)(ii) and the date the claim was filed was unintentional. Since the statement appearing in the petition varies from the required language, the statement is being construed as the statement required by 37 CFR §1.78(a)(3). If this is not a correct reading of the statement appearing in the petition, petitioner should promptly notify the Office.

A corrected Filing Receipt, which includes the priority claim to the prior-filed nonprovisional application, accompanies this decision on petition.

Any inquiries concerning this decision may be directed to the undersigned at (571) 272-3218. All other inquiries concerning either the examination procedures or status of the application should be directed to the Technology Center.

This application is being forwarded to Technology Center Art Unit 2611 for consideration by the examiner of applicant's entitlement to claim benefit of priority under 35 U.S.C. § 120 to the prior-filed application.

Frances Hicks
Petitions Examiner
Office of Petitions

ATTACHMENT: Corrected Filing Receipt

UNITED STATES PATENT AND TRADEMARK OFFICE

UNITED STATES DEPARTMENT OF COMMERCE
United States Patent and Trademark Office
Address: COMMISSIONER FOR PATENTS
P.O. Box 1450
Alexandria, Virginia 22313-1450
www.uspto.gov

APPL NO.	FILING OR 371(c) DATE	ART UNIT	FIL FEE REC'D	ATTY.DOCKET NO	TOT CLMS	IND CLMS
11/071,865	03/02/2005	2611	1765	DFT-004	48	8

CONFIRMATION NO. 3486

CORRECTED FILING RECEIPT

OC000000024841483

28661
SIERRA PATENT GROUP, LTD.
1657 Hwy 395, Suite 202
Minden, NV 89423

Date Mailed: 07/16/2007

Receipt is acknowledged of this nonprovisional patent application. The application will be taken up for examination in due course. Applicant will be notified as to the results of the examination. Any correspondence concerning the application must include the following identification information: the U.S. APPLICATION NUMBER, FILING DATE, NAME OF APPLICANT, and TITLE OF INVENTION. Fees transmitted by check or draft are subject to collection. Please verify the accuracy of the data presented on this receipt. **If an error is noted on this Filing Receipt, please write to the Office of Initial Patent Examination's Filing Receipt Corrections. Please provide a copy of this Filing Receipt with the changes noted thereon. If you received a "Notice to File Missing Parts" for this application, please submit any corrections to this Filing Receipt with your reply to the Notice. When the USPTO processes the reply to the Notice, the USPTO will generate another Filing Receipt incorporating the requested corrections (if appropriate).**

Applicant(s)

Forrest J. Brown, Carson City, NV;
Ronald E. Kunzel, Carson City, NV;
David W. Loar, Reno, NV;
Kenneth D'Alessando, Glenbrood, NV;

Assignment For Published Patent Application

Stealth Management, Inc.

Power of Attorney:

Kenneth D'Alessandro--29144
William Wilbar IV--43265
Timothy Brisson--44046
John Crosby--49058

Domestic Priority data as claimed by applicant

This application is a CIP of 10/825,789 04/16/2004 PAT 7,046,741

Foreign Applications

If Required, Foreign Filing License Granted: 05/04/2005

The country code and number of your priority application, to be used for filing abroad under the Paris Convention, is US11/071,865

Projected Publication Date: Not Applicable

Non-Publication Request: No

Early Publication Request: No

**** SMALL ENTITY ****

Title

Single and multiple sinewave modulation and demodulation techniques employing carrier-zero and carrier-peak data-word start and stop

Preliminary Class

375

PROTECTING YOUR INVENTION OUTSIDE THE UNITED STATES

Since the rights granted by a U.S. patent extend only throughout the territory of the United States and have no effect in a foreign country, an inventor who wishes patent protection in another country must apply for a patent in a specific country or in regional patent offices. Applicants may wish to consider the filing of an international application under the Patent Cooperation Treaty (PCT). An international (PCT) application generally has the same effect as a regular national patent application in each PCT-member country. The PCT process **simplifies** the filing of patent applications on the same invention in member countries, but **does not result** in a grant of "an international patent" and does not eliminate the need of applicants to file additional documents and fees in countries where patent protection is desired.

Almost every country has its own patent law, and a person desiring a patent in a particular country must make an application for patent in that country in accordance with its particular laws. Since the laws of many countries differ in various respects from the patent law of the United States, applicants are advised to seek guidance from specific foreign countries to ensure that patent rights are not lost prematurely.

Applicants also are advised that in the case of inventions made in the United States, the Director of the USPTO must issue a license before applicants can apply for a patent in a foreign country. The filing of a U.S. patent application serves as a request for a foreign filing license. The application's filing receipt contains further information and guidance as to the status of applicant's license for foreign filing.

Applicants may wish to consult the USPTO booklet, "General Information Concerning Patents" (specifically, the section entitled "Treaties and Foreign Patents") for more information on timeframes and deadlines for filing foreign patent applications. The guide is available either by contacting the USPTO Contact Center at 800-786-9199, or it can be viewed on the USPTO website at http://www.uspto.gov/web/offices/pac/doc/general/index.html.

For information on preventing theft of your intellectual property (patents, trademarks and copyrights), you may wish to consult the U.S. Government website, http://www.stopfakes.gov. Part of a Department of Commerce initiative, this website includes self-help "toolkits" giving innovators guidance on how to protect intellectual property in specific countries such as China, Korea and Mexico. For questions regarding patent enforcement issues, applicants may call the U.S. Government hotline at 1-866-999-HALT (1-866-999-4158).

LICENSE FOR FOREIGN FILING UNDER
Title 35, United States Code, Section 184
Title 37, Code of Federal Regulations, 5.11 & 5.15

GRANTED

The applicant has been granted a license under 35 U.S.C. 184, if the phrase "IF REQUIRED, FOREIGN FILING LICENSE GRANTED" followed by a date appears on this form. Such licenses are issued in all applications where the conditions for issuance of a license have been met, regardless of whether or not a license may be required as set forth in 37 CFR 5.15. The scope and limitations of this license are set forth in 37 CFR 5.15(a) unless an earlier license has been issued under 37 CFR 5.15(b). The license is subject to revocation upon written notification. The date indicated is the effective date of the license, unless an earlier license of similar scope has been granted under 37 CFR 5.13 or 5.14.

This license is to be retained by the licensee and may be used at any time on or after the effective date thereof unless it is revoked. This license is automatically transferred to any related applications(s) filed under 37 CFR 1.53(d). This license is not retroactive.

The grant of a license does not in any way lessen the responsibility of a licensee for the security of the subject matter as imposed by any Government contract or the provisions of existing laws relating to espionage and the national security or the export of technical data. Licensees should apprise themselves of current regulations especially with respect to certain countries, of other agencies, particularly the Office of Defense Trade Controls, Department of State (with respect to Arms, Munitions and Implements of War (22 CFR 121-128)); the Bureau of Industry and Security, Department of Commerce (15 CFR parts 730-774); the Office of Foreign Assets Control, Department of Treasury (31 CFR Parts 500+) and the Department of Energy.

NOT GRANTED

No license under 35 U.S.C. 184 has been granted at this time, if the phrase "IF REQUIRED, FOREIGN FILING LICENSE GRANTED" DOES NOT appear on this form. Applicant may still petition for a license under 37 CFR 5.12, if a license is desired before the expiration of 6 months from the filing date of the application. If 6 months has lapsed from the filing date of this application and the licensee has not received any indication of a secrecy order under 35 U.S.C. 181, the licensee may foreign file the application pursuant to 37 CFR 5.15(b).

UNITED STATES PATENT AND TRADEMARK OFFICE

Commissioner for Patents
United States Patent and Trademark Office
P.O. Box 1450
Alexandria, VA 22313-1450
www.uspto.gov

COPY MAILED

MAR 1 2 2008

OFFICE OF PETITIONS

SIERRA PATENT GROUP, LTD.
1663 HWY 395, SUITE 201
MINDEN NV 89423

In re Application of

BROWN, Forrest J. et al.
Application No. 11/071,865
Filed: March 04, 2005
Attorney Docket No. **DFT-004**

DECISION ON PETITION
TO WITHDRAW
FROM RECORD

This is a decision on the Request to Withdraw as attorney or agent of record under 37 C.F.R. § 1.36(b), filed December 10, 2007.

The request is **APPROVED**.

A grantable request to withdraw as attorney/agent of record must be signed by every attorney/agent seeking to withdraw or contain a clear indication that one attorney is signing on behalf of another/others. A request to withdraw will not be approved unless at least 30 (thirty) days would remain between the date of approval and the later of the expiration date of a time to file a response or the expiration date of the maximum time period which can be extended under 37 C.F.R. § 1.136(a).

The request was signed by Kenneth D'Alessandro on behalf of all attorneys of record who are associated with customer No. 28661. All attorneys/agents associated have been withdrawn. Applicant is reminded that there is no attorney of record at this time.

The request to change the correspondence of record is not acceptable as the requested correspondence address is not that of: (1) the first named signing inventor; or (2) an intervening assignee of the entire interest under 37 C.F.R 3.71. All future communications from the Office will be directed to the first named signing inventor at the first copied address below until otherwise properly notified by the applicant.

Telephone inquiries concerning this decision should be directed to Tredelle Jackson at 571-272-2783.

Tredelle D. Jackson
Paralegal Specialst
Office of Petitions

cc: **FORREST J. BROWN**
1889 MAPLE CREEK LANE
CARSON CITY, NV 89701

cc: **CRAIG DEGRAFF**
DATA FLOW TECHNOLOGIES, INC.
10538 S. FEATHERWOOD DRIVE
SOUTH JORDAN, UT 84095

UNITED STATES PATENT AND TRADEMARK OFFICE

Commissioner for Patents
United States Patent and Trademark Office
P.O. Box 1450
Alexandria, VA 22313-1450
www.uspto.gov

LEWIS AND ROCA L.L.P.
1663 HIGHWAY 395, SUITE 201
MINDEN, NV 89423

COPY MAILED
AUG 2 9 2008

In re Application of	:	
Coley et al.	:	
Application No. 11/071,869	:	DECISION ON PETITION
Filed: March 2, 2005	:	
Attorney Docket No. GRAPH-004COC	:	

This is a decision on the petition under the unintentional provisions of 37 CFR 1.137(b), filed July 30, 2008, to revive the above-identified application.

The petition is **DISMISSED**.

Any request for reconsideration of this decision must be submitted within TWO (2) MONTHS from the mail date of this decision. Extensions of time under 37 CFR 1.136(a) are permitted. The reconsideration request should include a cover letter entitled "Renewed Petition under 37 CFR 1.137(b)." This is **not** a final agency action within the meaning of 5 U.S.C.§ 704.

The application became abandoned for failure to timely pay the issue and publication fees on or before May 21, 2008, as required by the Notice of Allowance and Fee(s) Due, mailed February 21, 2008, which set a statutory period of reply of three (3) months. Accordingly, the application became abandoned on May 22, 2008. A Notice of Abandonment was mailed June 16, 2008.

A grantable petition under 37 CFR 1.137(b) must be accompanied by: (1) the required reply, unless previously filed; (2) the petition fee as set forth in 37 CFR 1.17(m); (3) a statement that the entire delay in filing the required reply from the due date for the reply until the filing of a grantable petition pursuant to 37 CFR 1.137(b) was unintentional; and (4) any terminal disclaimer (and fee as set forth in 37 CFR 1.20(d)) required by 37 CFR 1.137(d). Where there is a question as to whether either the abandonment or the delay in filing a petition under 37 CFR 1.137 was unintentional, the Director may require additional information. See MPEP 711.03(c)(II)(C) and (D). The instant petition lacks item (1).

Petitioner has failed to pay the issue fee of $720.00 and publication fee of $300.00. Petitioner has instead filed a Request for Continued Examination (RCE) in response to the Notice of Allowance.

35 U.S.C. 41(a)(7) and 151 each require payment of the issue fee as a condition of reviving an application abandoned for failure to pay the issue fee. Therefore, the filing of a RCE application without payment of the issue fee or any outstanding balance thereof is not an acceptable reply in an application abandoned for failure to pay the issue fee or any portion thereof.

Petitioner is advised that, once submitted, the issue fee cannot be refunded. If, however, this application is again allowed, petitioner may request that it be applied towards the issue fee required by the new Notice of Allowance.

Further correspondence with respect to this matter should be addressed as follows:

By Mail: Mail Stop PETITION
Commissioner for Patents
P. O. Box 1450
Alexandria, VA 22313-1450

By hand: U. S. Patent and Trademark Office
Customer Service Window, Mail Stop Petitions
Randolph Building
401 Dulany Street
Alexandria, VA 22314

By facsimile: (571) 273-8300
Attn: Office of Petitions

Telephone inquiries concerning this decision should be directed to Joan Olszewski at (571) 272-7751.

Liana Walsh
Petitions Examiner
Office of Petitions

UNITED STATES PATENT AND TRADEMARK OFFICE

Commissioner for Patents
United States Patent and Trademark Office
P.O. Box 1450
Alexandria, VA 22313-1450
www.uspto.gov

LEWIS AND ROCA L.L.P.
1663 HIGHWAY 395, SUITE 201
MINDEN, NV 89423

COPY MAILED
SEP 19 2008

In re Application of	:	
Coley et al.	:	
Application No. 11/071,869	:	DECISION ON PETITION
Filed: March 2, 2005	:	
Attorney Docket No. GRAPH-004COC	:	

This is a decision on the renewed petition under the unintentional provisions of 37 CFR 1.137(b), filed September 4, 2008, to revive the above-identified application.

The petition is **GRANTED**.

This application became abandoned for failure to timely pay the issue and publication fees on or before May 21, 2008, as required by the Notice of Allowance and Fee(s) Due mailed February 21, 2008. Accordingly, the date of abandonment of this application is May 22, 2008. A Notice of Abandonment was mailed June 16, 2008.

The petition satisfies the requirements of 37 CFR 1.137(b) in that petitioner has supplied (1) the reply in the form of payment of the issue fee of $720.00 and the publication fee of $300.00, and a Request for Continued Examination (as previously filed July 30, 2008); (2) the petition fee of $770.00; and (3) a proper statement of unintentional delay.

Petitioner is advised that, once submitted, the issue fee cannot be refunded. If, however, this application is again allowed, petitioner may request that it be applied towards the issue fee required by the new Notice of Allowance.

The file is now being forwarded to Technology Center 2131 for processing of the Request for Continued Examination under 37 CFR 1.114 filed July 30, 2008.

Telephone inquiries concerning this decision should be directed to Joan Olszewski at (571) 272-7751.

/Liana Walsh/
Liana Walsh
Petitions Examiner
Office of Petitions

UNITED STATES PATENT AND TRADEMARK OFFICE

Commissioner for Patents
United States Patent and Trademark Office
P.O. Box 1450
Alexandria, VA 22313-1450
www.uspto.gov

LEWIS AND ROCA LLP
1663 Hwy 395, Suite 201
Minden NV 89423

COPY MAILED

OCT 23 2008

OFFICE OF PETITIONS

In re Application of	:	
Christopher D. Coley, et al.	:	
Application No. 11/071,871	:	DECISION GRANTING PETITION
Filed: March 2, 2005	:	UNDER 37 CFR 1.313(c)(2)
Attorney Docket No. GRAPH-004COF	:	

This is a decision on the petition under 37 CFR 1.313(c)(2), filed October 23, 2008, to withdraw the above-identified application from issue after payment of the issue fee.

The petition is **GRANTED**.

The above-identified application is withdrawn from issue for consideration of a submission under 37 CFR 1.114 (request for continued examination). *See* 37 CFR 1.313(c)(2).

Petitioner is advised that the issue fee paid on* May 28, 2008 *cannot be refunded. If, however, this application is again allowed, petitioner may request that it be applied towards the issue fee required by the new Notice of Allowance.[1]

Telephone inquiries should be directed to Terri Williams at (571) 272-2991.

This application is being referred to Technology Center AU 2131 for processing of the request for continued examination under 37 CFR 1.114 and for consideration of the concurrently filed information disclosure statement.

Terri Williams
Terri Williams
Petitions Examiner
Office of Petitions

---

[1] *The request to apply the issue fee to the new Notice may be satisfied by completing and returning the new Part B – Fee(s) Transmittal Form (along with any balance due at the time of submission). Petitioner is advised that the Issue Fee Transmittal Form* ***must*** *be completed and timely submitted to avoid abandonment of the application.*

UNITED STATES PATENT AND TRADEMARK OFFICE

Commissioner for Patents
United States Patent and Trademark Office
P.O. Box 1450
Alexandria, VA 22313-1450
www.uspto.gov

COPY MAILED

JAN 0 5 2009

OFFICE OF PETITIONS

LINDEN, STAUFFER PATENTS
1006 MONTFORD RD.
CLEVELAND HTS. OH 44121

In re Application of

KIM, Hyeokman et al.
Application No. 11/071,894
Filed: March 03, 2005
Attorney Docket No. **VIV-5J**

DECISION ON PETITION TO WITHDRAW FROM RECORD

This is a decision on the Request to Withdraw as attorney or agent of record under 37 C.F.R. § 1.36(b), filed December 12, 2008.

The request is **APPROVED**.

A grantable request to withdraw as attorney/agent of record must be signed by every attorney/agent seeking to withdraw or contain a clear indication that one attorney is signing on behalf of another/others. The Office requires the practitioner(s) requesting withdrawal to certify that he, she, or they have: (1) given reasonable notice to the client, prior to the expiration of the response period, that the practitioner(s) intends to withdraw from employment; (2) delivered to the client or a duly authorized representative of the client all papers and property (including funds) to which the client is entitled; and (3) notified the client of any responses that may be due and the time frame within which the client must respond, pursuant 37 CFR 10.40(c).

The request was signed by Gerald Linden on behalf of all attorneys of record who are associated with customer No. 69186. All attorneys/agents associated with the Customer Number 69186 have been withdrawn. Applicant is reminded that there is no attorney of record at this time.

All future correspondence will be directed to the first named inventor Hyeokman Kim at the address indicated below.

Telephone inquiries concerning this decision should be directed to Tredelle Jackson at 571-272-2783.

Tredelle D. Jackson
Paralegal Specialist
Office of Petitions

cc: **HYCOKMAN KIM**
HANSHIN APT 114-1401
DONAM-DONG 609-1
SUNGBUK-GU SEOUL
KOREA 136-060

UNITED STATES PATENT AND TRADEMARK OFFICE

Commissioner for Patents
United States Patent and Trademark Office
P.O. Box 1450
Alexandria, VA 22313-1450
www.uspto.gov

STERNE, KESSLER, GOLDSTEIN & FOX P.L.L.C.
1100 NEW YORK AVENUE, N.W.
WASHINGTON, DC 20005

COPY MAILED

SEP 05 2008

OFFICE OF PETITIONS

In re Application of Nelson et al.	:	
Reissue Application No. 11/071,898	:	
Reissue Filing Date: March 4, 2005	:	Decision on Petition
Reissue of Patent No. 6,529,377	:	
Original Issue Date: March 4, 2003	:	
Attorney Docket No.2222.023RE10	:	

This is a decision on the petition under 37 CFR 1.183 filed March 6, 2008, seeking waiver of 37 CFR §§ 1.67 and 1.63 where they require that a supplemental declaration be executed by the named inventors.

The petition is **granted.**

In view of the efforts recounted in the petition to obtain the signature of Sommader, it is agreed that justice would be served by waiving the requirement for his signature on the supplemental declaration filed March 6, 2008.

The aforementioned supplemental declaration has been accepted, on petition, and placed in the file.

Technology Center Art Unit 2835 will be informed the petition has been granted and the Office will respond to the amendments filed March 6, 2008, and June 6, 2008, in due course.

Telephone inquiries regarding this communication should be directed to Petitions Attorney Steven Brantley at (571) 272-3203.

Charles Steven Brantley
Senior Petitions Attorney
Office of Petitions

UNITED STATES PATENT AND TRADEMARK OFFICE

Commissioner for Patents
United States Patent and Trademark Office
P.O. Box 1450
Alexandria, VA 22313-1450
www.uspto.gov

NIXON PEABODY, LLP
401 9TH STREET, NW
SUITE 900
WASHINGTON DC 20004-2128

COPY MAILED

FEB 01 2007

OFFICE OF PETITIONS

In re Application of	:	
Stevens et al.	:	
Application No. 11/071,899	:	DECISION ON PETITION
Filed: March 4, 2005	:	UNDER 37 CFR 1.78(a)(6)
Attorney Docket No. 001807-4	:	

This is a decision on the PETITION, UNDER 37 C.F.R. 1.78(a)(6), FOR THE ACCEPTANCE OF A LATE CLAIM FOR PRIORITY, UNDER 35 U.S.C. § 119(e) TO PROVISIONAL APPLICATION SERIAL NO. 60/280,153, filed March 4, 2005, which is treated as a petition under 37 CFR 1.78(a)(6) to accept an unintentionally delayed claim under 35 U.S.C. §119(e) for the benefit of the prior-filed provisional application set forth in the concurrently filed application data sheet.

The petition is **DISMISSED AS MOOT.**

On March 4, 2005, applicants filed the present application as a reissue of application No. 10/109,667 filed April 1, 2002 (Patent No. 6,690,145 issued February 10, 2004). As filed, the reissue application seeks to correct applicants' mistake by adding a benefit claim under 35 U.S.C. 119(e) to provisional application serial No. 60/283,153.

However, on filing of a reissue application, no petition under 1.78(a)(6) is required to make such correction. As stated in MPEP 1402,

> Where the application, which became the patent to be reissued, was filed on or after November 29, 2000, reissue may be employed to correct an applicant's mistake by adding or correcting a benefit claim under 35 U.S.C. 119(e). A petition under 37 CFR 1.78(a)(6) for an unintentionally delayed claim under 35 U.S.C. 119(e) would not be required in addition to filing a reissue application.

In view of the above, the $1370 petition fee is unnecessary. Accordingly, the petition fee although authorized, will not be charged to petitioner's deposit account.

Any inquiries concerning this decision may be directed to the undersigned at (571) 272- 3219. All other inquiries concerning either the examination procedures or status of the application should be directed to the Technology Center.

The application is being forwarded to Technology Center AU 2834 for consideration by the examiner of the claim under 35 U.S.C. §119(e) for the benefit of priority to the prior-filed provisional application.

Nancy Johnson
Senior Petitions Attorney
Office of Petitions

UNITED STATES PATENT AND TRADEMARK OFFICE

Commissioner for Patents
United States Patent and Trademark Office
P.O. Box 1450
Alexandria, VA 22313-1450
www.uspto.gov

MARKELL SEITZMAN
KEY SAFETY SYSTEMS, INC.
7000 NINETEEN MILE ROAD
STERLING HEIGHTS MI 48314

COPY MAILED

JUN 06 2007

OFFICE OF PETITIONS

In re Application of	:	
Brian C. Ford et al	:	
Application No. 11/071,943	:	DECISION ON PETITION
Filed: March 4, 2005	:	UNDER 37 CFR 1.78(a)(3)
Attorney Docket No. 921 DIV	:	

This is a decision on the petition under 37 CFR 1.78(a)(3), filed February 5, 2007, to accept an unintentionally delayed claim under 35 U.S.C. §120 for the benefit of priority to the prior-filed nonprovisional application set forth in the concurrently filed amendment.

The petition is **DISMISSED.**

A petition for acceptance of a claim for late priority under 37 CFR 1.78(a)(3) is only applicable to those applications filed on or after November 29, 2000. Further, the petition is appropriate only after the expiration of the period specified in 37 CFR 1.78(a)(2)(ii). In addition, the petition under 37 CFR 1.78(a)(3) must be accompanied by:

(1) the reference required by 35 U.S.C. § 120 and 37 CFR 1.78(a)(2)(i) of the prior-filed application, unless previously submitted;
(2) the surcharge set forth in § 1.17(t); and
(3) a statement that the entire delay between the date the claim was due under 37 CFR 1.78(a)(2)(ii) and the date the claim was filed was unintentional. The Director may require additional information where there is a question whether the delay was unintentional.

The petition does not comply with item (1)

37 CFR 1.78(a)(2)(i) requires that any nonprovisional application claiming the benefit of one or more prior-filed copending nonprovisional applications must contain or be amended to contain a reference to each such prior-filed application, identifying it by application number (consisting of the series code and serial number) and indicating the relationship of the applications. The

relationship between the applications is whether the subject application is a continuation, divisional, or continuation-in-part of a prior-filed nonprovisional application. An example of a proper benefit claim is: "This application is a continuation of Application No. 10/---, filed---." A benefit claim that merely states: "This application claims the benefit of Application No. 10/---, filed---," does not comply with 37 CFR 1.72(a)(2)(i) since the proper relationship, which includes the type of continuing application, is not stated. Also, the status of each nonprovisional parent application (if it is patented or abandoned) should also be indicated, following the filing date of the parent nonprovisional application. *See* MPEP Section 201.11, Reference to Prior Nonprovisional Applications. The amendment fails to comply with the provisions of 37 CFR 1.78(a)(2)(i) and is therefore unacceptable.

Before the petition under 37 CFR § 1.78(a)(3) can be granted, a renewed petition under 37 CFR § 1.78(a)(3) an Application Data Sheet or a substitute amendment (complying with 37 CFR 1.121 and 37 CFR 1.76(b)(5)), which states the relationship of the prior-filed applications (namely application no.10/210,248), to the above application is required.

Further correspondence with respect to this matter should be addressed as follows:

By mail: Mail Stop PETITIONS
Commissioner for Patents
Post Office Box 1450
Alexandria, VA 22313-1450

By hand: Customer Service Window
Mail Stop Petitions
Randolph Building
401 Dulany Street
Alexandria, VA 22314

By fax: (571) 273-8300
ATTN: Office of Petitions

Any questions concerning this matter may be directed to the undersigned at (571) 272-3208.

Karen Creasy

Karen Creasy
Petitions Examiner
Office of Petitions

UNITED STATES PATENT AND TRADEMARK OFFICE

Commissioner for Patents
United States Patent and Trademark Office
P.O. Box 1450
Alexandria, VA 22313-1450
www.uspto.gov

MARKELL SITZMAN
KEY SAFETY SYSTEMS, INC.
7000 NINETEEN MILE ROAD
STERLING HEIGHTS MI 48314

COPY MAILED

MAR 19 2008

OFFICE OF PETITIONS

In re Application of	:
Brian C. Ford et al	:
Application No. 11/071,943	: DECISION ON PETITION
Filed: March 4, 2005	: UNDER 37 CFR 1.78(a)(3)
Attorney Docket No. 921 DIV	:

This is a decision on the renewed petition under 37 CFR 1.78(a)(3), filed October 15, 2007, to accept an unintentionally delayed claim under 35 U.S.C. § 120 for the benefit of priority to the prior-filed nonprovisional application set forth in the amendment filed with the petition.

The petition is **GRANTED**.

A petition for acceptance of a claim for late priority under 37 CFR 1.78(a)(3) is only applicable to those applications filed on or after November 29, 2000. Further, the petition is appropriate only after the expiration of the period specified in 37 CFR 1.78(a)(2)(ii). In addition, the petition under 37 CFR 1.78(a)(3) must be accompanied by:

(1) the reference required by 35 U.S.C. § 120 and 37 CFR 1.78(a)(2)(i) of the prior-filed application, unless previously submitted;
(2) the surcharge set forth in § 1.17(t); and
(3) a statement that the entire delay between the date the claim was due under 37 CFR 1.78(a)(2)(ii) and the date the claim was filed was unintentional. The Director may require additional information where there is a question whether the delay was unintentional.

All of the above requirements having been satisfied, the late claim for priority under 35 U.S.C. § 120 is accepted as being unintentionally delayed.

The granting of the petition to accept the delayed benefit claim to the prior-filed application under 37 CFR 1.78(a)(3) should not be construed as meaning that this application is entitled to the benefit of the prior-filed application. In order for this application to be entitled to the

benefit of the prior-filed application, all other requirements under 35 U.S.C. § 120 and 37 CFR 1.78(a)(1) and (a)(2) must be met. Similarly, the fact that the corrected Filing Receipt accompanying this decision on petition includes the prior-filed application should not be construed as meaning that applicant is entitled to the claim for benefit of priority to the prior-filed application noted thereon. Accordingly, the examiner will, in due course, consider this benefit claim and determine whether the application is entitled to the benefit of the earlier filing date.

A corrected Filing Receipt, which includes the priority claim to the prior-filed nonprovisional application, accompanies this decision on petition.

Any inquiries concerning this decision may be directed to the undersigned at (571) 272-3208. All other inquiries concerning either the examination procedures or status of the application should be directed to the Technology Center.

This application is being forwarded to Technology Center Art Unit 3616 for consideration by the examiner of applicant's entitlement to claim benefit of priority under 35 U.S.C. § 120 to prior-filed Application No. 10/210,248.

Karen Creasy

Karen Creasy
Petitions Examiner
Office of Petitions

ATTACHMENT: Corrected Filing Receipt

UNITED STATES PATENT AND TRADEMARK OFFICE

UNITED STATES DEPARTMENT OF COMMERCE
United States Patent and Trademark Office
Address: COMMISSIONER FOR PATENTS
P.O. Box 1450
Alexandria, Virginia 22313-1450
www.uspto.gov

APPLICATION NUMBER	FILING or 371(c) DATE	GRP ART UNIT	FIL FEE REC'D	ATTY.DOCKET.NO	TOT CLAIMS	IND CLAIMS
11/071,943	03/04/2005	3616	1400	921 DIV	6	3

CONFIRMATION NO. 6415

CORRECTED FILING RECEIPT

Markell Seitzman
Key Safety Systems, Inc.
7000 Nineteen Mile Road
Sterling Heights, MI 48314

OC000000028944973

Date Mailed: 03/19/2008

Receipt is acknowledged of this non-provisional patent application. The application will be taken up for examination in due course. Applicant will be notified as to the results of the examination. Any correspondence concerning the application must include the following identification information: the U.S. APPLICATION NUMBER, FILING DATE, NAME OF APPLICANT, and TITLE OF INVENTION. Fees transmitted by check or draft are subject to collection. Please verify the accuracy of the data presented on this receipt. **If an error is noted on this Filing Receipt, please write to the Office of Initial Patent Examination's Filing Receipt Corrections. Please provide a copy of this Filing Receipt with the changes noted thereon. If you received a "Notice to File Missing Parts" for this application, please submit any corrections to this Filing Receipt with your reply to the Notice. When the USPTO processes the reply to the Notice, the USPTO will generate another Filing Receipt incorporating the requested corrections**

Applicant(s)

Brian C. Ford, Mt. Clemens, MI;
Lawrence R. Langbeen, Attica, MI;
Mohannad F. Murad, Troy, MI;
Hossam Almasri, Sterling Heights, MI;
Randal Gosk, Troy, MI;
John M. Burdock, St. Clair Shores, MI;

Assignment For Published Patent Application

Key Safety Systems, Inc.

Power of Attorney: The patent practitioners associated with Customer Number 23518

Domestic Priority data as claimed by applicant

This application is a CIP of 10/210,248 08/01/2002 PAT 6,994,372
and is a DIV of 10/280,150 10/25/2002 PAT 6,863,301
which is a CIP of 09/870,906 05/31/2001 PAT 6,550,804
which claims benefit of 60/271,133 02/23/2001

Foreign Applications

If Required, Foreign Filing License Granted: 03/28/2005

The country code and number of your priority application, to be used for filing abroad under the Paris Convention, is **US 11/071,943**

Projected Publication Date: Not Applicable

Non-Publication Request: No

Early Publication Request: No
Title

Driver side air module with annular air bag and centrally disposed control module

Preliminary Class

280

PROTECTING YOUR INVENTION OUTSIDE THE UNITED STATES

Since the rights granted by a U.S. patent extend only throughout the territory of the United States and have no effect in a foreign country, an inventor who wishes patent protection in another country must apply for a patent in a specific country or in regional patent offices. Applicants may wish to consider the filing of an international application under the Patent Cooperation Treaty (PCT). An international (PCT) application generally has the same effect as a regular national patent application in each PCT-member country. The PCT process **simplifies** the filing of patent applications on the same invention in member countries, but **does not result** in a grant of "an international patent" and does not eliminate the need of applicants to file additional documents and fees in countries where patent protection is desired.

Almost every country has its own patent law, and a person desiring a patent in a particular country must make an application for patent in that country in accordance with its particular laws. Since the laws of many countries differ in various respects from the patent law of the United States, applicants are advised to seek guidance from specific foreign countries to ensure that patent rights are not lost prematurely.

Applicants also are advised that in the case of inventions made in the United States, the Director of the USPTO must issue a license before applicants can apply for a patent in a foreign country. The filing of a U.S. patent application serves as a request for a foreign filing license. The application's filing receipt contains further information and guidance as to the status of applicant's license for foreign filing.

Applicants may wish to consult the USPTO booklet, "General Information Concerning Patents" (specifically, the section entitled "Treaties and Foreign Patents") for more information on timeframes and deadlines for filing foreign patent applications. The guide is available either by contacting the USPTO Contact Center at 800-786-9199, or it can be viewed on the USPTO website at http://www.uspto.gov/web/offices/pac/doc/general/index.html.

For information on preventing theft of your intellectual property (patents, trademarks and copyrights), you may wish to consult the U.S. Government website, http://www.stopfakes.gov. Part of a Department of Commerce initiative, this website includes self-help "toolkits" giving innovators guidance on how to protect intellectual property in specific countries such as China, Korea and Mexico. For questions regarding patent enforcement issues, applicants may call the U.S. Government hotline at 1-866-999-HALT (1-866-999-4158).

LICENSE FOR FOREIGN FILING UNDER

Title 35, United States Code, Section 184

Title 37, Code of Federal Regulations, 5.11 & 5.15

GRANTED

The applicant has been granted a license under 35 U.S.C. 184, if the phrase "IF REQUIRED, FOREIGN FILING LICENSE GRANTED" followed by a date appears on this form. Such licenses are issued in all applications where

the conditions for issuance of a license have been met, regardless of whether or not a license may be required as set forth in 37 CFR 5.15. The scope and limitations of this license are set forth in 37 CFR 5.15(a) unless an earlier license has been issued under 37 CFR 5.15(b). The license is subject to revocation upon written notification. The date indicated is the effective date of the license, unless an earlier license of similar scope has been granted under 37 CFR 5.13 or 5.14.

This license is to be retained by the licensee and may be used at any time on or after the effective date thereof unless it is revoked. This license is automatically transferred to any related applications(s) filed under 37 CFR 1.53(d). This license is not retroactive.

The grant of a license does not in any way lessen the responsibility of a licensee for the security of the subject matter as imposed by any Government contract or the provisions of existing laws relating to espionage and the national security or the export of technical data. Licensees should apprise themselves of current regulations especially with respect to certain countries, of other agencies, particularly the Office of Defense Trade Controls, Department of State (with respect to Arms, Munitions and Implements of War (22 CFR 121-128)); the Bureau of Industry and Security, Department of Commerce (15 CFR parts 730-774); the Office of Foreign AssetsControl, Department of Treasury (31 CFR Parts 500+) and the Department of Energy.

NOT GRANTED

No license under 35 U.S.C. 184 has been granted at this time, if the phrase "IF REQUIRED, FOREIGN FILING LICENSE GRANTED" DOES NOT appear on this form. Applicant may still petition for a license under 37 CFR 5.12, if a license is desired before the expiration of 6 months from the filing date of the application. If 6 months has lapsed from the filing date of this application and the licensee has not received any indication of a secrecy order under 35 U.S.C. 181, the licensee may foreign file the application pursuant to 37 CFR 5.15(b).

+UNITED STATES PATENT AND TRADEMARK OFFICE

Commissioner for Patents
United States Patent and Trademark Office
P.O. Box 1450
Alexandria, VA 22313-1450
www.uspto.gov

MORRISON & FOERSTER LLP
425 MARKET STREET
SAN FRANCISCO CA 94105-2482

MAILED

NOV 13 2009

OFFICE OF PETITIONS

In re Application of	:	
Alan Edward Jones	:	
Application No. 11/071,954	:	DECISION ON PETITION
Filed: March 3, 2005	:	TO WITHDRAW
Attorney Docket No. 562492003700	:	FROM RECORD
	:	

This is a decision on the Request to Withdraw as attorney or agent of record under 37 C.F.R. § 1.36(b), filed August 31, 2009.

The request is **NOT APPROVED**.

The Office will no longer accept address changes to a new practitioner of law firm filed with a Request, absent the filing of a power of attorney to the new representative. The Office will either change the correspondence address of record to the most current address information provided for the assignee of the entire interest who properly became of record under 37 CFR 3.71 or, the most current address information provided for the first named inventor.

Accordingly, the request to withdraw from record cannot be approved because the request does not include an acceptable current correspondence address for future communications from the Office.

Additionally, as set forth in MPEP 403(I), the addition or deletion of a practitioner from the list of persons associated with a Customer Number should be done by way of a *Request for Customer Number Data Change* (PTO/SB/124) and not a *Request for Withdrawal As Attorney or Agent and Change of Correspondence Address* (Form PTO/SB/83).

All future communications from the Office will continue to be directed to the above-listed address until otherwise notified by applicant.

Telephone inquiries concerning this decision should be directed to undersigned at 571-272-1642.

All other inquiries concerning the examination or status of this application should be directed to the Technology Center.

/AMW/
April M. Wise
Petitions Examiner
Office of Petitions

UNITED STATES PATENT AND TRADEMARK OFFICE

UNITED STATES DEPARTMENT OF COMMERCE
United States Patent and Trademark Office
Address: COMMISSIONER FOR PATENTS
P.O. Box 1450
Alexandria, Virginia 22313-1450
www.uspto.gov

HAMILTON, BROOK, SMITH & REYNOLDS, P.C.
530 VIRGINIA ROAD
P.O. BOX 9133
CONCORD, MA 01742-9133

Mail Date: 04/21/2010

Applicant	: Keith A. Fotta	: DECISION ON REQUEST FOR
Patent Number	: 7574471	: RECALCULATION of PATENT
Issue Date	: 08/11/2009	: TERM ADJUSTMENT IN VIEW
Appliction No	: 11/071,988	: OF WYETH AND NOTICE OF INTENT TO
Filed	: 03/04/2005	: ISSUE CERTIFICATE OF CORRECTION
		:

The Request for Recalculation is **GRANTED** to the extent indicated.

The patent term adjustment has been determined to be **1062** days. The USPTO will *sua sponte* issue a certificate of correction reflecting the amount of PTA days determined by the recalculation.

Prior to the issuance of the certificate of correction, the USPTO will afford patentee an opportunity to be heard and request reconsideration. Accordingly, patentee has **one month or thirty (30) days**, whichever is longer, to file a request for reconsideration of this patent term adjustment calculation. See 35 U.S.C. 154(b)(3)(B)(ii) and 37 CFR 1.322(a)(4). No extensions of time will be granted under 37 CFR 1.136.

Patentee should use document code PET.OP if electronically filing a request for reconsideration of this patent term adjustment calculation. The patentee must also include the information required by 37 CFR 1.705(b)(2) and the fee required by 37 CFR 1.18(e). If patentee does not file a timely request for reconsideration of this patent term adjustment calculation including the information required by 37 CFR 1.705(b)(2) and the fee required by 37 CFR 1.18(e), the USPTO will issue a certificate of correction reflecting the PTA determination noted above.

Patentee should be aware that in order to preserve the right to review in the United States District Court for the District of Columbia of the USPTO patent term adjustment determination, patentee must ensure that he or she also take the steps required under 35 U.S.C. 154(b)(4)(A) in a timely manner. Nothing in the request for recalculation should be construed as providing an alternative time frame for commencing a civil action under 35 U.S.C. 154(b)(4)(A).

Any questions concerning this decision should be directed to the Office of Patent Legal Administration at 571-272-7702.

UNITED STATES PATENT AND TRADEMARK OFFICE

Commissioner for Patents
United States Patent and Trademark Office
P.O. Box 1450
Alexandria, VA 22313-1450
www.uspto.gov

Date Mailed : 07/29/08

Patent No. : 7250598 B2
Inventor : HOLLINGSWORTH, RUSSELL E.
Patent Issued : 07/31/07
Docket No. : **434764**

Re: Request for Certificate of Correction

Consideration has been given your request for the issuance of a certificate of correction for the above-identified patent under the provisions of Rule(s) 1.322.

Inspection of the file of the application for the patent reveals that in column 1, line 53 is printed in accordance with the record (no fee or authorization to charge fee). **"Therefore, no correction(s) is in order here under United States Codes (U.S.C.) 254 and the Code of Federal Regulation (C.F.R.) 1322."**

In view of the foregoing, your request in this matter is hereby denied.

Lamonte M. Newsome
For Mary Diggs, Supervisor
Decisions & Certificates
Of Correction Branch
(703) 305-8309 or (703)-308-9390 #112

LATHROP & GAGE LC
4845 PEARL EAST CIRCLE
SUITE 300
BOULDER CO 80301

Lmn

UNITED STATES PATENT AND TRADEMARK OFFICE

Commissioner for Patents
United States Patent and Trademark Office
P.O. Box 1450
Alexandria, VA 22313-1450
www.uspto.gov

FISH & RICHARDSON PC
P.O. BOX 1022
MINNEAPOLIS MN 55440-1022

COPY MAILED

AUG 2 1 2006

OFFICE OF PETITIONS

In re Application of	:	
Cosic	:	
Application No. 11/072,030	:	DECISION ON PETITION
Filed: March 4, 2005	:	TO WITHDRAW
Attorney Docket No. 13409-002004	:	FROM RECORD
	:	

This is a decision on the Request to Withdraw as attorney or agent of record under 37 C.F.R. § 1.36(b), filed February 3, 2006.

The request is **APPROVED**.

A grantable request to withdraw as attorney/agent of record must be signed by every attorney/agent seeking to withdraw or contain a clear indication that one attorney is signing on behalf of another/others. A request to withdraw will not be approved unless at least 30 (thirty) days would remain between the date of approval and the later of the expiration date of a time to file a response or the expiration date of the maximum time period which can be extended under 37 C.F.R. § 1.136(a).

The request was signed by Paul A. Pysher on behalf of all attorneys of record

All attorneys/agents associated with the application have been withdrawn. Although there is a customer number associated with this attorney's address, the attorneys/agents were not appointed by customer.

Applicant is reminded that there is no attorney of record at this time.

The correspondence address of record has been changed and the new correspondence address is the address indicated below.

Telephone inquiries concerning this decision should be directed to April Wise at 571-272-1642.

Denise Pothier
Petitions Examiner
Office of Petitions

cc: Jasmin Cosic
39 Benefit Street
Pawtucket, RI 02861

UNITED STATES PATENT AND TRADEMARK OFFICE

UNITED STATES DEPARTMENT OF COMMERCE
United States Patent and Trademark Office
Address: COMMISSIONER FOR PATENTS
P.O. Box 1450
Alexandria, Virginia 22313-1450
www.uspto.gov

APPLICATION NO.	FILING DATE	FIRST NAMED INVENTOR	ATTORNEY DOCKET NO.	CONFIRMATION NO.
11/072,032	03/04/2005	Philip S. Burkum	200405401-1	9175

7590 04/21/2008
HEWLETT PACKARD COMPANY
P O BOX 272400, 3404 E. HARMONY ROAD
INTELLECTUAL PROPERTY ADMINISTRATION
FORT COLLINS, CO 80527-2400

EXAMINER
MCPHERSON, JOHN A

ART UNIT	PAPER NUMBER
1795	

NOTIFICATION DATE	DELIVERY MODE
04/21/2008	ELECTRONIC

DECISION GRANTING PETITION UNDER 37 CFR 1.138(d)

The declaration of express abandonment is recognized

This is in response to the petition under 37 CFR 1.138(d), requesting for a refund of any previously paid search fee and excess claims fee in the above-identified application.

The petition is granted.

The express abandonment is recognized. Any previously paid search fee and excess claims fee are hereby refunded.

Telephone inquiries should be directed to the Office of Data Management at (571) 272-4200.

Nimi Farmer

Patent Publication Branch
Office of Data Management

Adjustment date: 04/23/2008 DTERRY 11072032
03/30/2005 AADOF01 00000051 082025
03 FC:1201 400.00 CR
04 FC:1202 650.00 CR

FORM PET651G (Rev. 08/07)

UNITED STATES PATENT AND TRADEMARK OFFICE

UNITED STATES DEPARTMENT OF COMMERCE
United States Patent and Trademark Office
Address: COMMISSIONER FOR PATENTS
P.O. Box 1450
Alexandria, Virginia 22313-1450
www.uspto.gov

Trellis Intellectual Property Law Group, PC
1900 EMBARCADERO ROAD
SUITE 109
PALO ALTO, CA 94303

Mail Date: 05/04/2010

Applicant	: Shinichi Araki	: DECISION ON REQUEST FOR
Patent Number	: 7570775	: RECALCULATION of PATENT
Issue Date	: 08/04/2009	: TERM ADJUSTMENT IN VIEW
Application No	: 11/072,048	: OF WYETH
Filed	: 03/03/2005	:
		:

The Patentee's Request for Recalculation is **DISMISSED.**

This Request is deemed ineligible for consideration for one or more of the following reasons:

(A). The patent for which PTA recalculation is requested is either a design or reissue application or is a reexamination proceeding;

(B). The patent for which PTA recalculation is requested resulted from a utility or plant application filed under 35 USC 111(a) before May 29, 2000 and no CPA filed in the application on/after May 29, 2000;

(C). The patent for which PTA recalculation is requested resulted from an international application in which the international filing date was before May 29, 2000 and no CPA filed in the application on/after May 29, 2000;

(D). The patent for which PTA recalculation is requested issued on/after March 2, 2010;

(E). The Request for Recalculation was filed more than 180 days after the grant date of the patent and the request was not filed within two months of a dismissal of a request for reconsideration of the of the patent term under 37 CFR 1.705(d);

(F). The Request for Recalculation is not solely limited to USPTO pre-Wyeth interpretation of 35 U.S.C. 154(b)(2)(A);

or

(G). A civil action was filed pursuant to 35 U.S.C. 154(b)(4)(A)concerning the same patent at issue in this request.

Patentee may file a reply to this decision dismissing the Request for Recalculation. Patentee must file such reply within one month or thirty days, whichever is longer, of the mail date of the decision dismissing the Request for Recalculation. No fee is required if patentee is asserting in the reply that the dismissal for ineligibility is improper.

Patentee should use document code PET.OP if electronically filing a reply to this dismissal. If the USPTO finds that the request was improperly deemed ineligible, the USPTO will mail applicant a recalculation determination.

Patentee should be aware that in order to preserve the right to review in the United States District Court for the District of Columbia of the USPTO patent term adjustment determination, patentee must ensure that he or she also take the steps required under 35 U.S.C. 154(b)(4)(A). Nothing in the request for recalculation should be construed as providing an alternative time frame for commencing a civil action under 35 U.S.C. 154 (b)(4)(A).

Any questions concerning this decision should be directed to the Office of Patent Legal Administration at 571-272-7702.

UNITED STATES PATENT AND TRADEMARK OFFICE

Commissioner for Patents
United States Patent and Trademark Office
P.O. Box 1450
Alexandria, VA 22313-1450
www.uspto.gov

TOWNSEND AND TOWNSEND
AND CREW, LLP/PIXAR
EIGHTH FLOOR
SAN FRANCISCO, CA 94111-3834

COPY MAILED

OCT 01 2007

OFFICE OF PETITIONS

In re Application of
Lena PETROVIC, et al
Application No. 11/072,049
Filed: March 3, 2005
Attorney Docket No. 21751-000640US

DECISION ON PETITION
TO WITHDRAW
FROM RECORD

This is a decision on the Request to Withdraw as attorney or agent of record under 37 C.F.R. § 1.36(b), filed March 20, 2007.

The request is **DISMISSED** as moot.

A review of the file record indicates that the power of attorney given to Townsend and Townsend and Crew, LLP has been revoked by the assignee of the patent application on April 27, 2007. Accordingly, the request to withdraw under 37 C.F.R. § 1.36(b) is moot.

The correspondence address of record has been changed and the new correspondence address is the address indicated below.

Telephone inquires concerning this decision should be directed to Diane Goodwyn at 571-272-6735.

April Wise
Petitions Examiner
Office of Petitions

cc: JONATHAN HOLLANDER
LAW OFFICE OF JONATHAN HOLLAND PC
73 SUMNER STREET
SUITE 301
SAN FRANCISCO, CA 94103-3979

UNITED STATES PATENT AND TRADEMARK OFFICE

Commissioner for Patents
United States Patent and Trademark Office
P.O. Box 1450
Alexandria, VA 22313-1450
www.uspto.gov

MORRISON & FOERSTER, LLP
555 WEST FIFTH STREET
SUITE 3500
LOS ANGELES, CA 90013-1024

COPY MAILED

SEP 02 2008

In re Application of	:	
PATTERNSON, Ryan C. et al.	:	
Application No. 11/072,052	:	DECISION ON PETITION
Filed: March 03, 2005	:	TO WITHDRAW
Attorney Docket No. **480062004600**	:	FROM RECORD
	:	

This is a decision on the Request to Withdraw as attorney or agent of record under 37 C.F.R. § 1.36(b), filed May 05, 2008.

The request is **NOT APPROVED** because it is moot.

A review of the file record indicates that the power of attorney to Morrison & Foerster, LLP has been revoked by the applicant of the patent application on May 19, 2008. Accordingly, the request to withdraw under 37 C.F.R. § 1.36(b) is moot.

All future communications from the Office will continue to be directed to the below-listed address until otherwise notified by applicant.

Telephone inquires concerning this decision should be directed to Michelle R. Eason at 571-272-4231.

Michelle R. Eason
Paralegal Specialist
Office of Petitions

cc: **RUTAN & TUCKER, LLP.**
611 ANTON BLVD
SUITE 1400
COSTA MESA CA 92626

UNITED STATES PATENT AND TRADEMARK OFFICE

Commissioner for Patents
United States Patent and Trademark Office
P.O. Box 1450
Alexandria, VA 22313-1450
www.uspto.gov

MAY - 9 2005

PRESTON GATES & ELLIS LLP
1900 MAIN STREET, SUITE 600
IRVINE CA 92614-7319

In re Application of:	:
A. Satyanarayan Naidu	:
Serial No.: 11/072,054	: PETITION TO MAKE SPECIAL
Filed: March 3, 2005	:
Attorney Docket No.: 51330-00001	:

This is in response to applicant's petition filed March 3, 2005, to make the above-identified application special under the provisions of 37 CFR 1.102(d), based on applicants who are small entities having applications relating to biotechnology.

Applicant has satisfied the provisions set forth in M.P.E.P. 708.02, XII (A), (B), and (C). The $130.00 petition fee as required by 37 CFR 1.17(h) was received as indicated by applicant. Therefore, the petition is **GRANTED**.

Should there be any questions with regard to this letter please contact Marianne C. Seidel by letter addressed to the Director, Technology Center 1600, PO BOX 1450, ALEXANDRIA, VA 22313-1450, or by telephone at 571-272-0584 or by facsimile transmission to the general Office facsimile number.

Marianne C. Seidel

Marianne C. Seidel
Special Program Examiner
Technology Center 1600

UNITED STATES PATENT AND TRADEMARK OFFICE

UNITED STATES DEPARTMENT OF COMMERCE
United States Patent and Trademark Office
Address: COMMISSIONER FOR PATENTS
P.O. Box 1450
Alexandria, Virginia 22313-1450
www.uspto.gov

Trellis Intellectual Property Law Group, PC
1900 EMBARCADERO ROAD
SUITE 109
PALO ALTO, CA 94303

Mail Date: 05/04/2010

Applicant	: Shinichi Araki	: DECISION ON REQUEST FOR
Patent Number	: 7242541	: RECALCULATION of PATENT
Issue Date	: 07/10/2007	: TERM ADJUSTMENT IN VIEW
Application No	: 11/072,068	: OF WYETH
Filed	: 03/03/2005	:
		:

The Patentee's Request for Recalculation is **DISMISSED.**

This Request is deemed ineligible for consideration for one or more of the following reasons:

(A). The patent for which PTA recalculation is requested is either a design or reissue application or is a reexamination proceeding;

(B). The patent for which PTA recalculation is requested resulted from a utility or plant application filed under 35 USC 111(a) before May 29, 2000 and no CPA filed in the application on/after May 29, 2000;

(C). The patent for which PTA recalculation is requested resulted from an international application in which the international filing date was before May 29, 2000 and no CPA filed in the application on/after May 29, 2000;

(D). The patent for which PTA recalculation is requested issued on/after March 2, 2010;

(E). The Request for Recalculation was filed more than 180 days after the grant date of the patent and the request was not filed within two months of a dismissal of a request for reconsideration of the of the patent term under 37 CFR 1.705(d);

(F). The Request for Recalculation is not solely limited to USPTO pre-Wyeth interpretation of 35 U.S.C. 154(b)(2)(A);

or

(G). A civil action was filed pursuant to 35 U.S.C. 154(b)(4)(A)concerning the same patent at issue in this request.

Patentee may file a reply to this decision dismissing the Request for Recalculation. Patentee must file such reply within one month or thirty days, whichever is longer, of the mail date of the decision dismissing the Request for Recalculation. No fee is required if patentee is asserting in the reply that the dismissal for ineligibility is improper.

Patentee should use document code PET.OP if electronically filing a reply to this dismissal. If the USPTO finds that the request was improperly deemed ineligible, the USPTO will mail applicant a recalculation determination.

Patentee should be aware that in order to preserve the right to review in the United States District Court for the District of Columbia of the USPTO patent term adjustment determination, patentee must ensure that he or she also take the steps required under 35 U.S.C. 154(b)(4)(A). Nothing in the request for recalculation should be construed as providing an alternative time frame for commencing a civil action under 35 U.S.C. 154 (b)(4)(A).

Any questions concerning this decision should be directed to the Office of Patent Legal Administration at 571-272-7702.

SPE RESPONSE FOR CERTIFICATE OF CORRECTION

Paper No.: _____

DATE : 7/9/09

TO SPE OF : ART UNIT **1797 (1700)**

SUBJECT : Request for Certificate of Correction for Appl. No.: **11/072,071** Patent No.: **7,514,394**

Attn: James Goloboy

Please respond to this request for a certificate of correction within 7 days.

FOR IFW FILES:

Please review the requested changes/corrections as shown in the **COCIN** document(s) in the IFW application image. No new matter should be introduced, nor should the scope or meaning of the claims be changed.

Please complete the response (see below) and forward the completed response to scanning using document code **COCX**.

FOR PAPER FILES:

Please review the requested changes/corrections as shown in the attached certificate of correction. Please complete this form (see below) and forward it with the file to:

Certificates of Correction Branch (C of C)
South Tower - 9A22
Palm Location 7580

Ernest C. White, LIE
Certificates of Correction Branch
703-308-9390 ext.122

Thank You For Your Assistance

The request for issuing the above-identified correction(s) is hereby:
Note your decision on the appropriate box.

- [x] **Approved** — **All** changes apply.
- [ ] **Approved in Part** — Specify below which changes **do not** apply.
- [ ] **Denied** — State the reasons for denial below.

Comments: ok

Glenn Calgarola
Supervisory Patent Examiner
Technology Center 1700

SPE

1797
Art Unit

PTOL-306 (REV. 7/03)

U.S. DEPARTMENT OF COMMERCE Patent and Trademark Office

UNITED STATES PATENT AND TRADEMARK OFFICE

Commissioner for Patents
United States Patent and Trademark Office
P.O. Box 1450
Alexandria, VA 22313-1450
www.uspto.gov

MAILED

SEP 14 2009

OFFICE OF PETITIONS

FISH & RICHARDSON P.C.
PO BOX 1022
MINNEAPOLIS, MN 55440-1022

In re Patent No. 7,514,394	:	
Kodali, et al.	:	DECISION DISMISSING
Application No. 11/072,071	:	REQUEST FOR
Issue Date: April 7, 2009	:	RECONSIDERATION OF
Filed: March 4, 2005	:	PATENT TERM ADJUSTMENT
Atty. Docket No.12856-003003	:	UNDER 37 CFR 1.705

This is in response to the "APPLICATION FOR PATENT TERM ADJUSTMENT UNDER 37 CFR § 1.705(d)", filed June 8, 2009. Patentees request that the determination of patent term adjustment be corrected from three hundred thirty-five (335) days to five hundred forty (540) days.

The request for reconsideration of patent term adjustment is **DISMISSED** with respect to making any change in the patent term adjustment determination under 35 U.S.C. § 154(b) of 335 days.

BACKGROUND

This application was filed on March 4, 2005. On September 25, 2008, a Request for Continued Examination under 37 CFR 1.114 (RCE) was filed. On April 7, 2009, the application matured into U.S. Patent No. 7,514,394, with a revised patent term adjustment of 335 days. The Office determined that the 205 days of Office delay pursuant to 35 U.S.C. 154(b)(1)(B) and 37 CFR 1.702(b)'[1] overlaps with the 461 days of Office delay pursuant to 35 U.S.C. 154(b)(1)(A) and 37 CFR 1.702(a)(1)[2,3] accorded prior to the

[1] As of the filing of the RCE on September 25, 2008, the application was pending three years and 205 days.

[2] 37 CFR § 1.702, provides grounds for adjustment of patent term due to examination delay under the Patent Term Guarantee Act of 1999 (original applications, other than designs, filed on or after May 29, 2000).

(a) Failure to take certain actions within specified time frames. Subject to the provisions of 35 U.S.C. 154(b) and this

filing of the request for continued examination. As such, the Office allowed only entry of the adjustment of 461 days for Office delay. No additional days of patent term adjustment were entered at issuance under the three-year pendency provision. Given the applicant delay of 126 days, the patent issued with a revised patent term adjustment of 335 (461 - 126) days.

On June 8, 2009, patentees timely submitted this request for reconsideration of patent term adjustment (with required fee), asserting that the correct number of days of Patent Term Adjustment is 540 days under the court's interpretation of the overlap provision as set forth in Wyeth v. Dudas, 580 F. Supp. 2d 138, 88 U.S.P.Q. 2d 1538 (D.D.C. 2008). Patentees assert that pursuant to Wyeth, a PTO delay under §154(b)(1)(A) overlaps with a delay under §154(b)(1)(B) only if the delays "occur on the same day." Patentees maintain that the total non-overlapping PTO delay under §154(b)(1)(A) & (B) is 666 days as these periods do not occur on the same day. Further, given the applicant delay of 126 days, patentees assert entitlement to 540 (461 + 205 - 126) days of patent term adjustment.

OPINION

Patentee's interpretation of the period of overlap has been considered, but found inconsistent with the Office's interpretation of the overlap provision, 35 U.S.C. 154(b)(2)(A). 35 U.S.C. 154(b)(2)(A) limits the adjustment of patent term, as follows:

> to the extent that the periods of delay attributable to grounds specified in paragraph (1) overlap, the period of any adjustment granted under this subsection shall not exceed the actual number of days the issuance of the patent was delayed.

---

subpart, the term of an original patent shall be adjusted if the issuance of the patent was delayed due to the failure of the Office to:

(1) Mail at least one of a notification under 35 U.S.C. 132 or a notice of allowance under 35 U.S.C. 151 not later than fourteen months after the date on which the application was filed under 35 U.S.C. 111(a) or fulfilled the requirements of 35 U.S.C. 371 in an international application;

[3] A non-final rejection was not mailed until August 8, 2007, fourteen months and 461 days after the application filing date of March 4, 2005

As explained in *Explanation of 37 CFR 1.703(f)*[4] *and of the United States Patent and Trademark Office Interpretation of 35 U.S.C. 154(b)(2)(A)*, 69 Fed. Reg. 34283 (June 21, 2004), the Office interprets 35 U.S.C. 154(b)(2)(A) as permitting either patent term adjustment under 35 U.S.C. 154(b)(1)(A)(i)-(iv), or patent term adjustment under 35 U.S.C. 154(b)(1)(B), but not as permitting patent term adjustment under both 35 U.S.C. 154(b)(1)(A)(i)-(iv) and 154(b)(1)(B). Accordingly, the Office implements the overlap provision as follows:

> If an application is entitled to an adjustment under 35 U.S.C. 154(b)(1)(B), the entire period during which the application was pending (except for periods excluded under 35 U.S.C. 154(b)(1)(B)(i)-(iii)), and not just the period beginning three years after the actual filing date of the application, is the period of delay under 35 U.S.C. 154(b)(1)(B) in determining whether periods of delay overlap under 35 U.S.C. 154(b)(2)(A). Thus, any days of delay for Office issuance of the patent more than 3 years after the filing date of the application, which overlap with the days of patent term adjustment accorded prior to the issuance of the patent will not result in any additional patent term adjustment. See 35 U.S.C. 154(b)(1)(B), 35 U.S.C. 154(b)(2)(A), and 37 CFR § 1.703(f). See *Changes to Implement Patent Term Adjustment Under Twenty Year Term; Final Rule*, 65 Fed. Reg. 56366 (Sept. 18, 2000). See also *Revision of Patent Term Extension and Patent Term Adjustment Provisions; Final Rule*, 69 Fed. Reg. 21704 (April 22, 2004), 1282 Off. Gaz. Pat. Office 100 (May 18, 2004). See also *Explanation of 37 CFR 1.703(f) and of the United States Patent and Trademark Office Interpretation of 35 U.S.C. 154(b)(2)(A)*, 69 Fed. Reg. 34283 (June 21, 2004).

Further, as stated in the *Explanation of 37 CFR 1.703(f) and of the United States Patent and Trademark Office Interpretation of 35 U.S.C. 154(b)(2)(A)*, the Office has consistently taken the

---

[4] Likewise, 37 CFR 1.703(f) provides that:

> To the extent that periods of delay attributable to the grounds specified in §1.702 overlap, the period of adjustment granted under this section shall not exceed the actual number of days the issuance of the patent was delayed.

position that if an application is entitled to an adjustment under the three-year pendency provision of 35 U.S.C. 154(b)(1)(B), the entire period during which the application was pending before the Office (except for periods excluded under 35 U.S.C. 154(b)(1)(B)(i)-(iii)), and not just the period beginning three years after the actual filing date of the application, is the relevant period under 35 U.S.C. 154(b)(1)(B) in determining whether periods of delay "overlap" under 35 U.S.C. 154(b)(2)(A).

This interpretation is consistent with the statute. Taken together the statute and rule provide that to the extent that periods of delay attributable to grounds specified in 35 U.S.C. 154(b)(1) and in corresponding §1.702 overlap, the period of adjustment granted shall not exceed the actual number of days the issuance of the patent was delayed.

In this instance, the relevant period under 35 U.S.C. 154(b)(1)(B) in determining whether periods of delay "overlap" under 35 U.S.C. 154(b)(2)(A) is the period during which the application was pending before the Office beginning on the application filing date under 35 U.S.C. 111(a), March 4, 2005, and ending on the date of filing of a request for continued examination (RCE), September 25, 2008, (not including any other periods excluded under 35 U.S.C. 154(b)(1)(B)(i)-(iii)). The relevant period ends with the filing of the RCE as the three-year time frame specified in 35 U.S.C. 154(b)(1)(B) does not include the period subsequent to the filing of the RCE. 35 U.S.C. 154(b)(1)(B)(i).

Pursuant to 35 U.S.C. 154(b)(1)(A) and 37 CFR 1.702(a)(1), 461 days of patent term adjustment were accorded during the pendency of the application for Office delay prior to the filing of the request for continued examination. There were no Office delays subsequent to the filing of the request for continued examination. Pursuant to 35 U.S.C. 154(b)(1)(B) and 37 CFR 1.702(b), 205 days of patent term adjustment accrued for Office issuance of the patent more than 3 years after the filing date of the application.

All of the 205 days of patent term adjustment under 37 CFR 1.702(b) overlap with the 461 days of patent term adjustment under 37 CFR 1.702(a)(1). Entry of both the 461 days and the 205 days is neither permitted nor warranted. 461 days is the actual number of days issuance of the patent was delayed.

Accordingly, at issuance, the Office properly entered no additional days of patent term adjustment.

CONCLUSION

In view thereof, the Office affirms that the revised determination of patent term adjustment at the time of the issuance of the patent is 335 days (461 days of Office delay - 126 days of applicant delay.)

Telephone inquiries specific to this matter should be directed to Kenya A. McLaughlin, Petitions Attorney, at (571) 272-3222.

Christina Tartera Donnell

Christina Tartera Donnell
Senior Petitions Attorney
Office of Petitions

UNITED STATES PATENT AND TRADEMARK OFFICE

Commissioner for Patents
United States Patent and Trademark Office
P.O. Box 1450
Alexandria, VA 22313-1450
www.uspto.gov

Townsend and Townsend and Crew, LLP/PIXAR
Two Embarcadero Center
Eighth Floor
San Francisco, CA 94111-3834

COPY MAILED

AUG 0 3 2007

OFFICE OF PETITIONS

In re Application of	:	
Lena Petrovic et al.	:	
Application No. 11/072,073	:	DECISION ON PETITION
Filed: March 3, 2005	:	TO WITHDRAW
Attorney Docket No. 21751-000650US	:	FROM RECORD
	:	

This is a decision on the Request to Withdraw as attorney or agent of record under 37 C.F.R. § 1.36(b), filed March 19, 2007.

The request is **NOT APPROVED** as moot.

A review of the file record indicates that the power of attorney to Townsend and Townsend and Crew, LLP/PIXAR has been revoked by the assignee of the patent application on April 27, 2007. Accordingly, the request to withdraw under 37 C.F.R. § 1.36(b) is moot.

All future communications from the Office will continue to be directed to the below-listed address until otherwise notified by applicant.

Telephone inquires concerning this decision should be directed to Terri Williams at 571-272-2991.

Terri Williams
Petitions Examiner
Office of Petitions

cc: **Jonathan M. Hollander**
Pixar-Hollander
73 Sumner Street
Suite 301
San Francisco, CA 94103

UNITED STATES PATENT AND TRADEMARK OFFICE

Commissioner for Patents
United States Patent and Trademark Office
P.O. Box 1450
Alexandria, VA 22313-1450
www.uspto.gov

FOLEY & LARDNER LLP
150 EAST GILMAN STREET
P.O. BOX 1497
MADISON WI 53701-1497

MAILED

JAN 29 2010

OFFICE OF PETITIONS

In re Application of	:	
Joseph Allen Pence et al	:	
Application No. 11/072,090	:	DECISION GRANTING PETITION
Filed: March 4, 2005	:	UNDER 37 CFR 1.313(c)(2)
Attorney Docket No. 088245-3779	:	

This is a decision on the petition under 37 CFR 1.313(c)(2), filed January 27, 2010, to withdraw the above-identified application from issue after payment of the issue fee.

The petition is **GRANTED**.

The above-identified application is withdrawn from issue for consideration of a submission under 37 CFR 1.114 (request for continued examination). *See* 37 CFR 1.313(c)(2).

Petitioner is advised that the issue fee paid on December 15, 2009 cannot be refunded. If, however, this application is again allowed, petitioner may request that it be applied towards the issue fee required by the new Notice of Allowance.[1]

Telephone inquiries should be directed to the undersigned at (571) 272-3208.

This application is being referred to Technology Center AU 2614 for processing of the request for continued examination under 37 CFR 1.114 and for consideration of the concurrently filed IDS.

/Karen Creasy/
Karen Creasy
Petitions Examiner
Office of Petitions

---

[1] *The request to apply the issue fee to the new Notice may be satisfied by completing and returning the new Part B – Fee(s) Transmittal Form (along with any balance due at the time of submission). Petitioner is advised that the Issue Fee Transmittal Form* ***must*** *be completed and timely submitted to avoid abandonment of the application.*

UNITED STATES PATENT AND TRADEMARK OFFICE

Commissioner for Patents
United States Patent and Trademark Office
P.O. Box 1450
Alexandria, VA 22313-1450
www.uspto.gov

MINTZ, LEVIN, COHN, FERRIS,
GLOVSKY AND POPEO, P.C
ONE FINANCIAL CENTER
BOSTON MA 02111

COPY MAILED

DEC 2 2 2009

OFFICE OF PETITIONS

In re Application of	:	
Groen, et al.	:	
Application No. 11/072,102	:	ON APPLICATION FOR
Filed: March 3, 2005	:	PATENT TERM ADJUSTMENT
Atty Docket No. 37704-502001US	:	

This is in response to the REQUEST FOR RECONSIDERATION OF PATENT TERM ADJUSTMENT UNDER 37 C.F.R. § 1.705(b), filed September 8, 2009. Applicants submit that the correct patent term adjustment to be indicated on the patent is eight hundred twenty-six (826) days, not four hundred forty-five (445) days as calculated by the Office as of the mailing of the initial determination of patent term adjustment. Applicants request this correction solely on the basis that the Office will take in excess of three years to issue this patent.

As the instant application for patent term adjustment requests reconsideration of the patent term adjustment as it relates to the Office's failure to issue the patent within 3 years of the filing date, the application for patent term adjustment under 37 CFR 1.705(b) is **DISMISSED as PREMATURE**.

Knowledge of the actual date the patent issues is required to calculate the amount, if any, of additional patent term patentees are entitled to for Office failure to issue the patent within 3 years. See § 1.702(b). The computer will not undertake the § 1.702(b) calculation until the actual date of issuance of the patent has been determined. Likewise, the computer will not calculate any further Office delay under § 1.702(a)(4) or applicant delay under § 1.704(c)(10) until the actual date of issuance of the patent has been determined. As such, the Office can not make a determination on the correctness of the patent term adjustment until the patent has issued.

Requesting reconsideration of the patent term adjustment to be indicated on the patent under 37 CFR 1.705(b) based on the initial determination of patent term adjustment and a projected issuance date of the patent is premature. Accordingly, it is appropriate to dismiss as premature such a request.

Rather than file an application for patent term adjustment under 37 CFR 1.705(b) contesting the 37 CFR 1.702(b) calculation at the time of the mailing of the notice of allowance, applicants are advised that they may wait until the time of the issuance of the patent and file a request for reconsideration of the patent term adjustment pursuant to 37 CFR 1.705(d). As the USPTO does not calculate the amount of time earned pursuant to 37 CFR 1.702(b) until the time of the issuance of the patent, the Office will consider any request for reconsideration of the patent term adjustment due to an error in the calculation of 37 CFR 1.702(b) to be timely if the request for reconsideration is filed within two months of the issuance of the patent. However, as to all other bases for contesting the initial determination of patent term adjustment received with the notice of allowance, applicants must timely file an application for patent term adjustment prior to the payment of the issue fee[1].

The Office acknowledges submission of the $200.00 fee set forth in 37 CFR 1.18(e) for consideration of the application for patent term adjustment under 37 CFR 1.705(b).

Any request for reconsideration of the patent term adjustment indicated on the patent must be timely filed within 2 months after issuance pursuant to 37 CFR 1.705(d) and must include payment of the required fee under 37 CFR 1.18(e).

The Office of Data Management has been advised of this decision. This application is being referred to the Office of Data Management for issuance of the patent.

---

[1] For example, if applicant disputes both the calculation of patent term adjustment under 37 CFR 1.702(a)(1) for Office failure to mail a first Office action or notice of allowance not later than fourteen months after the date on which the application was filed and under 37 CFR 1.702(b) for Office failure to issue a patent within three years of the actual filing date of the application, then applicant must still timely file an application for patent term adjustment prior to the payment of the issue fee to contest the calculation of Office delay in issuing a first Office action or notice of allowance. See 37 CFR 1.705(b) and 35 U.S.C. 154(b)(3)(B). A dispute as to the calculation of the §1.702(a)(1) period raised on request for reconsideration of patent term adjustment under 37 CFR 1.705(d) will be dismissed as untimely filed.

Telephone inquiries specific to this decision should be directed to Senior Petitions Attorney Shirene Willis Brantley at (571) 272-3230.

Nancy Johnson
Senior Petitions Attorney
Office of Petitions

UNITED STATES PATENT AND TRADEMARK OFFICE

Commissioner for Patents
United States Patent and Trademark Office
P.O. Box 1450
Alexandria, VA 22313-1450
www.uspto.gov

MAILED
MAY 24 2010
OFFICE OF PETITIONS

MINTZ, LEVIN, COHN, FERRIS, GLOVSKY AND POPEO, P.C
ONE FINANCIAL CENTER
BOSTON MA 02111

In re Patent of Groen, et al.	: DECISION ON REQUEST FOR
Patent No. 7,658,925	: RECONSIDERATION OF
Issue Date: February 9, 2010	: PATENT TERM ADJUSTMENT
Application No. 11/072,102	: AND NOTICE OF INTENT TO ISSUE
Filed: March 3, 2005	: CERTIFICATE OF CORRECTION
Atty. Docket No. 37704-502001US	:

This is a decision on the petition filed on April 9, 2010, which is being treated as a petition under 37 CFR 1.705(d) requesting that the patent term adjustment indicated on the above-identified patent be corrected to indicate that the term of the above-identified patent is extended or adjusted by one thousand seventy-two (1072) days.

The petition to correct the patent term adjustment indicated on the above-identified patent to indicate that the term of the above-identified patent is extended or adjusted by one thousand seventy-two (1072) days is **GRANTED to the extent indicated herein**.

Patentees' assertion of 1072 days of patent term adjustment is derived from the following formula: 570 days of A Delay minus 708 days of B Delay minus 113 days of overlap between A Delay and B Delay minus 93 days of Applicant Delay (petition 2nd page).

The Office concurs with patentees' calculation of the period of A Delay, the period of B Delay, and the overlapping period between the two periods of delay.

However, the Office's calculation of Applicant Delay differs from patentees' calculation. The Office has reviewed the entire record and has determined there is an additional period of Applicant delay. A Notice of Allowance was mailed on June 8, 2009. On September 2, 2009, applicants filed a post allowance communication that added a certification and requisite statements consistent with 37 CFR 1.97(e) and 37 CFR 1.97(d) that were lacking in a supplemental information disclosure statement (IDS), filed April 15, 2009. The supplemental IDS had not been considered due to the lack of the certification and requisite statements.

The filing of the post allowance communication is a basis for reduction of patent term adjustment pursuant to 37 CFR 1.704(c)(10).

37 CFR 1.704(c)(10) provides that:

> Submission of an amendment under § 1.312 or other paper after a notice of allowance has been given or mailed, in which case the period of adjustment set forth in § 1.703 shall be reduced by the lesser of:
>
> (i) The number of days, if any, beginning on the date the amendment under § 1.312 or other paper was filed and ending on the mailing date of the Office action or notice in response to the amendment under § 1.312 or such other paper;
>
> or
>
> (ii) Four months;

Pursuant to 37 CFR 1.704(c)(10), the Office should have entered a period of reduction of 17 days, counting the number of days in the period beginning on September 2, 2009, the date the post allowance communication was filed, and ending on September 18, 2009, the date the post allowance communication was addressed.

Therefore, the total Applicant Delay is 110 (93 + 17) days.

Accordingly, the patent term adjustment indicated in the patent is to be corrected by issuance of a certificate of correction showing a revised Patent Term Adjustment of one thousand fifty-five (1055) days, which is 570 days of A Delay plus 708 days of B Delay minus 113 days overlap minus 110 days of Applicant Delay.

The Office acknowledges submission of the $200.00 fee set forth in 37 CFR 1.18(e). No additional fees are required.

The application is being forwarded to the Certificates of Correction Branch for issuance of a certificate of correction. The Office will issue a certificate of correction indicating that the term of the above-identified patent is extended or adjusted by **one thousand fifty-five (1055)** days.

Telephone inquiries specific to this matter should be directed to the undersigned at (571) 272-3230.

Shirene Willis Brantley

Shirene Willis Brantley
Senior Petitions Attorney
Office of Petitions

Enclosure: Copy of DRAFT Certificate of Correction

UNITED STATES PATENT AND TRADEMARK OFFICE

CERTIFICATE OF CORRECTION

PATENT : 7,658,925 B2

DATED : **February 9, 2010** **DRAFT**

INVENTOR(S) : Groen et al.

It is certified that error appears in the above-identified patent and that said Letters Patent is hereby corrected as shown below:

On the cover page,

[*] Notice: Subject to any disclaimer, the term of this patent is extended or adjusted under 35 U.S.C. 154(b) by 615 days

Delete the phrase "by 615 days" and insert – by 1055 days--

UNITED STATES PATENT AND TRADEMARK OFFICE

UNITED STATES DEPARTMENT OF COMMERCE
United States Patent and Trademark Office
Address: COMMISSIONER FOR PATENTS
P.O. Box 1450
Alexandria, Virginia 22313-1450
www.uspto.gov

HICKMAN PALERMO TRUONG & BECKER/ORACLE
2055 GATEWAY PLACE
SUITE 550
SAN JOSE, CA 95110-1083

Mail Date: 04/21/2010

Applicant	: Wei Ming Hu	: DECISION ON REQUEST FOR
Patent Number	: 7627614	: RECALCULATION of PATENT
Issue Date	: 12/01/2009	: TERM ADJUSTMENT IN VIEW
Appliction No	: 11/072,111	: OF WYETH AND NOTICE OF INTENT TO
Filed	: 03/03/2005	: ISSUE CERTIFICATE OF CORRECTION
		:

The Request for Recalculation is **GRANTED** to the extent indicated.

The patent term adjustment has been determined to be **438** days. The USPTO will *sua sponte* issue a certificate of correction reflecting the amount of PTA days determined by the recalculation.

Prior to the issuance of the certificate of correction, the USPTO will afford patentee an opportunity to be heard and request reconsideration. Accordingly, patentee has **one month or thirty (30) days**, whichever is longer, to file a request for reconsideration of this patent term adjustment calculation. See 35 U.S.C. 154(b)(3)(B)(ii) and 37 CFR 1.322(a)(4). No extensions of time will be granted under 37 CFR 1.136.

Patentee should use document code PET.OP if electronically filing a request for reconsideration of this patent term adjustment calculation. The patentee must also include the information required by 37 CFR 1.705(b)(2) and the fee required by 37 CFR 1.18(e). If patentee does not file a timely request for reconsideration of this patent term adjustment calculation including the information required by 37 CFR 1.705(b)(2) and the fee required by 37 CFR 1.18(e), the USPTO will issue a certificate of correction reflecting the PTA determination noted above.

Patentee should be aware that in order to preserve the right to review in the United States District Court for the District of Columbia of the USPTO patent term adjustment determination, patentee must ensure that he or she also take the steps required under 35 U.S.C. 154(b)(4)(A) in a timely manner. Nothing in the request for recalculation should be construed as providing an alternative time frame for commencing a civil action under 35 U.S.C. 154(b)(4)(A).

Any questions concerning this decision should be directed to the Office of Patent Legal Administration at 571-272-7702.

UNITED STATES PATENT AND TRADEMARK OFFICE

Commissioner for Patents
United States Patent and Trademark Office
P.O. Box 1450
Alexandria, VA 22313-1450
www.uspto.gov

LAMORTE & ASSOCIATES P.C.
P.O. BOX 434
YARDLEY PA 19067

COPY MAILED

JUL 10 2007

OFFICE OF PETITIONS

ON PETITION

In re Application of
Stephen T. Epstein
Application No. 11/072,121
Filed: March 7, 2005
Attorney Docket No. **EPSTEIN-4**

This is a decision on the petition filed February 9, 2007 under 37 CFR 1.137(b), [1] to revive the above-identified application.

The petition under 37 CFR 1.137 (b) is **GRANTED**.

This application became abandoned November 2, 2006 for failure to timely pay the issue fee on or before November 1, 2006. Accordingly, a Notice of Abandonment was mailed December 28, 2006.

The issue fee and petition fee have all been applied. All other requirements of 37 CFR 1.137(b) having now been met, this application file is being forwarded to the Publishing Division to be processed into a patent.

Telephone inquiries concerning this matter may be directed to the undersigned Petitions Attorney at (571) 272-3212.

Patricia Faison-Ball
Senior Petitions Attorney
Office of Petitions

---

[1] Effective December 1, 1997, the provisions of 37 CFR 1.137(b) now provide that where the delay in reply was unintentional, a petition may be filed to revive an abandoned application or a lapsed patent pursuant to 37 CFR 1.137(b). A grantable petition filed under the provisions of 37 CFR 1.137(b) must be accompanied by:

(1) the required reply, unless previously filed. In a nonprovisional application abandoned for failure to prosecute, the required reply may be met by the filing of a continuing application. In a nonprovisional application filed on or after June 8, 1995, and abandoned for failure to prosecute, the required reply may also be met by the filing of a request for continued examination in compliance with § 1.114. In an application or patent, abandoned or lapsed for failure to pay the issue fee or any portion thereof, the required reply must be the payment of the issue fee or any outstanding balance thereof.

(2) the petition fee as set forth in 37 CFR 1.17(m);

(3) a statement that the entire delay in filing the required reply from the due date for the reply until the filing of a grantable petition pursuant to 37 CFR 1.137(b) was unintentional. The Commissioner may required additional information where there is a question whether the delay was unintentional; and

(4) any terminal disclaimer (and fee as set forth in 37 CFR 1.20(d)) required pursuant to 37 CFR 1.137(c)).

UNITED STATES PATENT AND TRADEMARK OFFICE

UNITED STATES DEPARTMENT OF COMMERCE
United States Patent and Trademark Office
Address: COMMISSIONER FOR PATENTS
P.O. Box 1450
Alexandria, Virginia 22313-1450
www.uspto.gov

MICHAEL BEST & FRIEDRICH LLP
100 E WISCONSIN AVENUE
Suite 3300
MILWAUKEE, WI 53202

Mail Date: 04/21/2010

Applicant	: Roland Strahle	: DECISION ON REQUEST FOR
Patent Number	: 7600559	: RECALCULATION of PATENT
Issue Date	: 10/13/2009	: TERM ADJUSTMENT IN VIEW
Appliction No	: 11/072,130	: OF WYETH AND NOTICE OF INTENT TO
Filed	: 03/04/2005	: ISSUE CERTIFICATE OF CORRECTION
		:

The Request for Recalculation is **GRANTED** to the extent indicated.

The patent term adjustment has been determined to be **0** days. The USPTO will *sua sponte* issue a certificate of correction reflecting the amount of PTA days determined by the recalculation.

Prior to the issuance of the certificate of correction, the USPTO will afford patentee an opportunity to be heard and request reconsideration. Accordingly, patentee has **one month or thirty (30) days**, whichever is longer, to file a request for reconsideration of this patent term adjustment calculation. See 35 U.S.C. 154(b)(3)(B)(ii) and 37 CFR 1.322(a)(4). No extensions of time will be granted under 37 CFR 1.136.

Patentee should use document code PET.OP if electronically filing a request for reconsideration of this patent term adjustment calculation. The patentee must also include the information required by 37 CFR 1.705(b)(2) and the fee required by 37 CFR 1.18(e). If patentee does not file a timely request for reconsideration of this patent term adjustment calculation including the information required by 37 CFR 1.705(b)(2) and the fee required by 37 CFR 1.18(e), the USPTO will issue a certificate of correction reflecting the PTA determination noted above.

Patentee should be aware that in order to preserve the right to review in the United States District Court for the District of Columbia of the USPTO patent term adjustment determination, patentee must ensure that he or she also take the steps required under 35 U.S.C. 154(b)(4)(A) in a timely manner. Nothing in the request for recalculation should be construed as providing an alternative time frame for commencing a civil action under 35 U.S.C. 154(b)(4)(A).

Any questions concerning this decision should be directed to the Office of Patent Legal Administration at 571-272-7702.

UNITED STATES PATENT AND TRADEMARK OFFICE

Commissioner for Patents
United States Patent and Trademark Office
P.O. Box 1450
Alexandria, VA 22313-1450
www.uspto.gov

JIM MILLANE, ESQ.
FOURTH FLOOR
760 THE CITY DRIVE
ORANGE, CA 92868

COPY MAILED

DEC 14 2006

OFFICE OF PETITIONS

In re Application of :
Richey, Robert Charles :
Application No. 11/072,134 :
Filed: March 4, 2005 :
Title: SYSTEM AND METHOD FOR DETECTING AND PREVENTING LEAKS IN PRESSURIZED PIPING SYSTEMS :

ON PETITION

This is a decision on the petition under 37 CFR §1.102(d), filed August 24, 2006, to make the above-identified application special. The petition requests that the above-identified application be made special under the accelerated examination procedure set forth in M.P.E.P. § 708.02, Section II: Infringement.

The petition is **GRANTED.**

A grantable petition to make an application special under 37 CFR §1.102(d) and MPEP §708.02, Section II: Infringement, must be accompanied by the required fee pursuant to 37 CFR 1.17(h) and a statement by the applicant, assignee, or attorney/agent registered to practice before the office alleging:

(A) That there is an infringing device or product actually on the market or method in use;

(B) That a rigid comparison of the alleged infringing device, product, or method with the claims of the application has been made, and that, in his or her opinion, some of the claims are unquestionably infringed; and

(C) That he or she has made or caused to be made a careful and thorough search of the prior art or has a good knowledge of the pertinent prior art.

Applicant must provide one copy of each of the references deemed most closely related to the subject matter encompassed by the claims if said references are not already of record.

The petition complies with all the above stated requirements. Accordingly, the above-identified application has been accorded "special" status.

Telephone inquires concerning this decision should be directed to the undersigned at (571) 272-3206. All other inquires concerning either the examination or status of the application should be directed to the Technology Center.

This matter is being referred to the Technology Center Art Unit 3711 for expedited prosecution.

Liana Walsh
Petitions Examiner
Office of Petitions

UNITED STATES PATENT AND TRADEMARK OFFICE

UNITED STATES DEPARTMENT OF COMMERCE
United States Patent and Trademark Office
Address: COMMISSIONER FOR PATENTS
P.O. Box 1450
Alexandria, Virginia 22313-1450
www.uspto.gov

APPLICATION NO.	FILING DATE	FIRST NAMED INVENTOR	ATTORNEY DOCKET NO.	CONFIRMATION NO.
11/072,134	03/04/2005	Robert Charles Richey		5879

7590 02/08/2007

Jim Millane, Esq.
790 The City Drive
Fourth Floor
Orange, CA 92868

EXAMINER
LARKIN, DANIEL SEAN

ART UNIT	PAPER NUMBER
2856	

MAIL DATE	DELIVERY MODE
02/08/2007	PAPER

Please find below and/or attached an Office communication concerning this application or proceeding.

UNITED STATES PATENT AND TRADEMARK OFFICE

Commissioner for Patents
United States Patent and Trademark Office
P.O. Box 1450
Alexandria, VA 22313-1450
www.uspto.gov

JIM MILLANE, ESQ.
FOURTH FLOOR
760 THE CITY DRIVE
ORANGE, CA 92868

COPY MAILED

DEC 1 4 2006

OFFICE OF PETITIONS

In re Application of :
Richey, Robert Charles :
Application No. 11/072,134 :
Filed: March 4, 2005 :
Title: SYSTEM AND METHOD FOR DETECTING AND PREVENTING LEAKS IN PRESSURIZED PIPING SYSTEMS :

ON PETITION

This is a decision on the petition under 37 CFR §1.102(d), filed August 24, 2006, to make the above-identified application special. The petition requests that the above-identified application be made special under the accelerated examination procedure set forth in M.P.E.P. § 708.02, Section II: Infringement.

The petition is **GRANTED.**

A grantable petition to make an application special under 37 CFR §1.102(d) and MPEP §708.02, Section II: Infringement, must be accompanied by the required fee pursuant to 37 CFR 1.17(h) and a statement by the applicant, assignee, or attorney/agent registered to practice before the office alleging:

(A) That there is an infringing device or product actually on the market or method in use;

(B) That a rigid comparison of the alleged infringing device, product, or method with the claims of the application has been made, and that, in his or her opinion, some of the claims are unquestionably infringed; and

(C) That he or she has made or caused to be made a careful and thorough search of the prior art or has a good knowledge of the pertinent prior art.

Applicant must provide one copy of each of the references deemed most closely related to the subject matter encompassed by the claims if said references are not already of record.

The petition complies with all the above stated requirements. Accordingly, the above-identified application has been accorded "special" status.

Telephone inquires concerning this decision should be directed to the undersigned at (571) 272-3206. All other inquires concerning either the examination or status of the application should be directed to the Technology Center.

This matter is being referred to the Technology Center Art Unit 3711 for expedited prosecution.

Liana Walsh
Petitions Examiner
Office of Petitions

UNITED STATES PATENT AND TRADEMARK OFFICE

UNITED STATES DEPARTMENT OF COMMERCE
United States Patent and Trademark Office
Address: COMMISSIONER FOR PATENTS
P.O. Box 1450
Alexandria, Virginia 22313-1450
www.uspto.gov

THE PROCTER & GAMBLE COMPANY
Global Legal Department - IP
Sycamore Building - 4th Floor
299 East Sixth Street
CINCINNATI, OH 45202

Mail Date: 04/21/2010

Applicant	: Matthew Joseph Macura	: DECISION ON REQUEST FOR
Patent Number	: 7634394	: RECALCULATION of PATENT
Issue Date	: 12/15/2009	: TERM ADJUSTMENT IN VIEW
Appliction No	: 11/072,152	: OF WYETH AND NOTICE OF INTENT TO
Filed	: 03/04/2005	: ISSUE CERTIFICATE OF CORRECTION
		:

The Request for Recalculation is **GRANTED** to the extent indicated.

The patent term adjustment has been determined to be **234** days. The USPTO will *sua sponte* issue a certificate of correction reflecting the amount of PTA days determined by the recalculation.

Prior to the issuance of the certificate of correction, the USPTO will afford patentee an opportunity to be heard and request reconsideration. Accordingly, patentee has **one month or thirty (30) days**, whichever is longer, to file a request for reconsideration of this patent term adjustment calculation. See 35 U.S.C. 154(b)(3)(B)(ii) and 37 CFR 1.322(a)(4). No extensions of time will be granted under 37 CFR 1.136.

Patentee should use document code PET.OP if electronically filing a request for reconsideration of this patent term adjustment calculation. The patentee must also include the information required by 37 CFR 1.705(b)(2) and the fee required by 37 CFR 1.18(e). If patentee does not file a timely request for reconsideration of this patent term adjustment calculation including the information required by 37 CFR 1.705(b)(2) and the fee required by 37 CFR 1.18(e), the USPTO will issue a certificate of correction reflecting the PTA determination noted above.

Patentee should be aware that in order to preserve the right to review in the United States District Court for the District of Columbia of the USPTO patent term adjustment determination, patentee must ensure that he or she also take the steps required under 35 U.S.C. 154(b)(4)(A) in a timely manner. Nothing in the request for recalculation should be construed as providing an alternative time frame for commencing a civil action under 35 U.S.C. 154(b)(4)(A).

Any questions concerning this decision should be directed to the Office of Patent Legal Administration at 571-272-7702.

UNITED STATES PATENT AND TRADEMARK OFFICE

Commissioner for Patents
United States Patent and Trademark Office
P.O. Box 1450
Alexandria, VA 22313-1450
www.uspto.gov

HODGSON RUSS LLP
THE GUARANTY BUILDING
140 PEARL STREET
SUITE 100
BUFFALO NY 14202-4040

MAILED

OCT 08 2009

OFFICE OF PETITIONS

In re Application of	:	
Dennis P. Pietrantoni	:	
Application No. 11/072156	:	
Filing or 371(c) Date: 03/04/2005	:	
Attorney Docket Number:	:	
42944.0119	:	ON PETITION

This is a decision on the "Petition to the Commissioner Under 37 C.F.R. §1.181(a) to Withdraw Holding of Abandonment," filed August 31, 2009.

This Petition is hereby **dismissed**.

Any further petition must be submitted within TWO (2) MONTHS from the mail date of this decision. Extensions of time under 37 CFR 1.136(a) are permitted. The reconsideration request should include a cover letter entitled "Renewed Petition under [insert the applicable code section]." This is **not** final agency action within the meaning of 5 U.S.C. § 704.

The above-identified application became abandoned for failure to timely and properly reply to the non-final Office action, mailed November 25, 2008. The Office action set a three (3) month period for reply. Extensions of time were available under 37 CFR 1.136(a). No response having been received, the application became abandoned February 26, 2009. A Notice of Abandonment was mailed August 24, 2009.

Applicant's Assertion

Applicant files the present petition and asserts that a timely reply to the Office action, to wit – an Amendment and authorization to charge extension of time fees, was filed on Monday, May 26, 2009, including a Certificate of Mailing under 37 CFR 1.8 (accord 37 CFR 1.7(a)), and received by this Office as evidenced by the copy of Applicant's return-receipt postcard. In support of this assertion, Applicant files a copy of the Amendment, and a copy of his return-receipt postcard acknowledging receipt by this Office of an Amendment on May 29, 2009.

A review of Office records reveal that this Office received the Amendment on May 29, 2007. A review of the Amendment reveals that it contained a Certificate of Mailing under 37 CFR 1.8, certifying that the Amendment was mailed to this Office on May 26, 2009. The Certificate of Mailing was executed by David L. Principe.

Applicable Law, Rules and MPEP

37 CFR 1.8(b), Certificate of mailing or transmission, states:

> (b) In the event that correspondence is considered timely filed by being mailed or transmitted in accordance with paragraph (a) of this section, but not received in the U.S. Patent and Trademark Office after a reasonable amount of time has elapsed from the time of mailing or transmitting of the correspondence, or after the application is held to be abandoned, or after the proceeding is dismissed, terminated, or decided with prejudice, the correspondence will be considered timely if the party who forwarded such correspondence:
> (1) Informs the Office of the previous mailing or transmission of the correspondence promptly after becoming aware that the Office has no evidence of receipt of the correspondence;
> (2) Supplies an additional copy of the previously mailed or transmitted correspondence and certificate; and
> (3) Includes a statement which attests on a personal knowledge basis or to the satisfaction of the Director to the previous timely mailing or transmission. If the correspondence was sent by facsimile transmission, a copy of the sending unit's report confirming transmission may be used to support this statement.
> (c) The Office may require additional evidence to determine if the correspondence was timely filed. (Emphasis supplied).

37 CFR 1.8(b)

Applicant has failed to comply with 37 CFR 1.8(b)(3). In this regard, while Applicant has filed, and Office records confirm that the Amendment in response to the Office action was filed by Applicant and received by this Office, the date of the Amendment filing has not been adequately established. 37 CFR 1.8(b)(3) requires a statement which attests on a personal knowledge basis to the timely mailing of the Reply; however, a statement from Mr. David L. Principe has not been provided. Accordingly, it is unclear whether the reply should be considered timely filed in accordance with 37 CFR 1.8.

The petition is dismissed without prejudice. Applicant should file a request for reconsideration of petition and include a statement from Mr. David L. Principe which attests on a personal knowledge basis to the timely mailing of the Amendment.

Further correspondence with respect to this matter should be addressed as follows:

By mail: Director for Patents
PO Box 1450
Alexandria, VA 22313-1450

By FAX: (571) 273-8300
Attn: Office of Petitions

By hand: Customer Service Window
Randolph Building
401 Dulany Street
Alexandria, VA 22314

Telephone inquiries concerning this matter should be directed to the undersigned at (571) 272-3232.

/Derek L. Woods/
Derek L. Woods
Attorney
Office of Petitions

UNITED STATES PATENT AND TRADEMARK OFFICE

Commissioner for Patents
United States Patent and Trademark Office
P.O. Box 1450
Alexandria, VA 22313-1450
www.uspto.gov

HODGSON RUSS LLP
THE GUARANTY BUILDING
140 PEARL STREET
SUITE 100
BUFFALO NY 14202-4040

COPY MAILED
JAN 08 2010

In re Application of	:	
Dennis P. Pietrantoni	:	
Application No. 11/072156	:	
Filing or 371(c) Date: 03/04/2005	:	
Attorney Docket Number:	:	
42944.0119	:	ON PETITION

This is a decision on the "Petition to the Commissioner Under 37 C.F.R. §1.181(a) to Withdraw Holding of Abandonment," filed December 8, 2009.

This Petition is hereby **granted**.

The above-identified application became abandoned for failure to timely and properly reply to the non-final Office action, mailed November 25, 2008. The Office action set a three (3) month period for reply. Extensions of time were available under 37 CFR 1.136(a). No response having been received, the application became abandoned February 26, 2009. A Notice of Abandonment was mailed August 24, 2009.

August 31, 2009 Petition under 37 CFR 1.181

Applicant filed a petition to withdraw the holding of abandonment on August 31, 2009, and asserted that a timely reply to the Office action was filed via facsimile on May 26, 2009. In support of this assertion, Applicant provided a copy of a return-receipt postcard acknowledging receipt by this Office of an Amendment on May 29, 2009, and a copy of an Amendment which included a Certificate of Transmission dated May 26, 2009, and executed by David L. Principe; however, no statement from Mr. Principe, attesting to the transmission, was filed.

The petition was dismissed in a Decision mailed October 8, 2009. A statement from Mr. Principe, was required.

The present renewed petition

Applicant files the present renewed petition and includes a statement from Mr. Principe which attests on a personal knowledge basis to the previous timely mailing of the Amendment.

In view of the foregoing, the petition is granted. The holding of abandonment is hereby withdrawn.

The application will be referred to Technology Center Art Unit 3771 for processing of the Amendment and response, and for continued examination in due course.

Telephone inquiries concerning this matter should be directed to the undersigned at (571) 272-3232.

/Derek L. Woods/
Derek L. Woods
Attorney
Office of Petitions

UNITED STATES PATENT AND TRADEMARK OFFICE

UNITED STATES DEPARTMENT OF COMMERCE
United States Patent and Trademark Office
Address: COMMISSIONER FOR PATENTS
P.O. Box 1450
Alexandria, Virginia 22313-1450
www.uspto.gov

Ryan, Mason & Lewis, LLP
90 Forest Avenue
Locust Valley, NY 11560

Mail Date: 04/21/2010

Applicant	: Andrew Brzezinski	: DECISION ON REQUEST FOR
Patent Number	: 7573815	: RECALCULATION of PATENT
Issue Date	: 08/11/2009	: TERM ADJUSTMENT IN VIEW
Appliction No	: 11/072,163	: OF WYETH AND NOTICE OF INTENT TO
Filed	: 03/04/2005	: ISSUE CERTIFICATE OF CORRECTION
		:

The Request for Recalculation is **GRANTED** to the extent indicated.

The patent term adjustment has been determined to be **1192** days. The USPTO will *sua sponte* issue a certificate of correction reflecting the amount of PTA days determined by the recalculation.

Prior to the issuance of the certificate of correction, the USPTO will afford patentee an opportunity to be heard and request reconsideration. Accordingly, patentee has **one month or thirty (30) days**, whichever is longer, to file a request for reconsideration of this patent term adjustment calculation. See 35 U.S.C. 154(b)(3)(B)(ii) and 37 CFR 1.322(a)(4). No extensions of time will be granted under 37 CFR 1.136.

Patentee should use document code PET.OP if electronically filing a request for reconsideration of this patent term adjustment calculation. The patentee must also include the information required by 37 CFR 1.705(b)(2) and the fee required by 37 CFR 1.18(e). If patentee does not file a timely request for reconsideration of this patent term adjustment calculation including the information required by 37 CFR 1.705(b)(2) and the fee required by 37 CFR 1.18(e), the USPTO will issue a certificate of correction reflecting the PTA determination noted above.

Patentee should be aware that in order to preserve the right to review in the United States District Court for the District of Columbia of the USPTO patent term adjustment determination, patentee must ensure that he or she also take the steps required under 35 U.S.C. 154(b)(4)(A) in a timely manner. Nothing in the request for recalculation should be construed as providing an alternative time frame for commencing a civil action under 35 U.S.C. 154(b)(4)(A).

Any questions concerning this decision should be directed to the Office of Patent Legal Administration at 571-272-7702.

UNITED STATES PATENT AND TRADEMARK OFFICE

Commissioner for Patents
United States Patent and Trademark Office
P.O. Box 1450
Alexandria, VA 22313-1450
www.uspto.gov

AUG -8 2006

BEYER WEAVER & THOMAS, LLP
P.O. BOX 70250
OAKLAND CA 94612-0250

In re Application of: LINDQUIST, THOMAS Serial No.: 11/072,173 Filed: March 4, 2005 Docket: IGT1P901C1X1C2 Title: GAMBLING CHIP RECOGNITION SYSTEM	DECISION ON PETITION TO EXPUNGE UNDER 37 C.F.R. 1.59

This is a response to the petitions under 37 CFR 1.59(b), filed May 12, 2006, June 5, 2006 and July 17, 2006, to expunge information from the above identified application.

The petition filed on May 12, 2006 is dismissed.

The decision on the petitions filed June 5, 2006 and July 17, 2006 will be held in abeyance until allowance of the application or mailing of an *Ex parte Quayle* action or a Notice of Abandonment, at which time the petition will be decided.

In the May 12, 2006 petition, petitioner requests that documents entitled Exhibits 1-32, which were not received by the USPTO, be expunged from the record. In the June 5, 2006 petition, petitioner requests that documents entitled Exhibits 1-32 be expunged from the record. In the July 17, 2006 petition, petitioner requests that documents entitled Exhibits 1-32 be expunged from the record.

Under MPEP 724.05(I), a petition to expunge information under MPEP 724.02 must contain:

(A) a clear identification of the information to be expunged without disclosure of the details thereof;

(B) a clear statement that the information to be expunged is trade secret material, proprietary material, and/or subject to a protective order, and that the information has not been otherwise made public;

(C) a commitment on the part of the petitioner to retain such information for the period of any patent with regard to which such information is submitted;

(D) a statement that the petition to expunge is being submitted by, or on behalf of, the party in interest who originally submitted the information; and

(E) the fee as set forth in 37 CFR 1.17(g) for a petition under 37 CFR 1.59(b).

The May 12, 2006 petition is deficient, because no documents were received concurrently with the petition. Accordingly, the USPTO is unable to expunge any documents it has not received.

The June 5, 2006 and July 17, 2006 petitions met requirements A, B, C, D and E as above.

The decision on the petitions filed on June 5, 2006 and July 17, 2006 are held in abeyance because prosecution on the merits is not closed. Accordingly, it is not appropriate to make a final determination of whether or not the material requested to be expunged is "material," with "materiality" being defined as any information which the examiner considers as being important to a determination of patentability of the claims. Thus, the decision on the petition to expunge must be held in abeyance at this time.

During prosecution on the merits, the examiner will determine whether or not the identified documents are considered to be "material." If the information is not considered by the examiner to be material, the information will be removed from the official file.

Petitioner may file a request for reconsideration of this decision, without fee. However, such a request must be filed within two months of the date of this decision. Any inquiry regarding this decision should be directed to Henry Yuen, Special Program Examiner, at (571) 272-4856.

Karen M. Young

Karen M. Young, Director
Technology Center 3700

UNITED STATES PATENT AND TRADEMARK OFFICE

Commissioner for Patents
United States Patent and Trademark Office
P.O. Box 1450
Alexandria, VA 22313-1450
www.uspto.gov

Justin R. White
BEYER WEAVER & THOMAS, LLP
P.O. BOX 70250
OAKLAND CA 94612-0250

AUG 29 2006

In re Application of: LINDQUIST
Appl. No.: 11/072,173
Filed: March 4, 2005
For: GAMBLING CHIP RECOGNITION SYSTEM

DECISION ON PETITION
Under 37 CFR 1.59

This is a response to the petition(s) under 37 CFR 1.59(b), filed on May 12, 2006, June 5, 2006 and July 17, 2006 by which petitioners request to expunge information from the above identified application. This decision vacates and supersedes the prior decision mailed August 8, 2006.

The prior decision indicates the May 12, 2006 decision was dismissed due to non-receipt of any information to expunge. However, the information is presently scanned into the PAIR system; however it is marked as "closed" and is not available to public view. The information is viewable by the examiner in the MADRAS system. This was overlooked during preparation of the prior decision. All documents submitted appear to have been received by the office.

The decision on the petition *will be held in abeyance until prosecution on the merits is closed, at which time the petition will be decided*.

Petitioner requests that the information submitted in each of the Information Disclosure Statement(s), filed May 12, 2006, June 5, 2006 and July 17, 2006 be expunged from the record. Petitioner states that either (A) that the information contains trade secret material, proprietary material and/or material that is subject to a protective order which has not been made public; or (B) that the information submitted was unintentionally submitted and the failure to obtain its return would cause irreparable harm to the party who submitted the information or to the party in interest on whose behalf the information was submitted, and the information has not otherwise been made public. Each petition fee set forth in 37 CFR 1.17(g) has been paid.

The decision on the petition(s) is held in abeyance because prosecution on the merits is not closed. Accordingly, it is not appropriate to make a final determination of whether or not the material requested to be expunged is "material", with "materiality" being defined as any information which the examiner considers as being important to a determination of patentability of the claims. Thus, the decision on the petition to expunge must be held in abeyance at this time.

During prosecution on the merits, the examiner will determine whether or not the identified document is considered to be "material". If the information is not considered by the examiner to be material, the information will be returned to the applicant.

The documents in question will not be available to the public during prosecution.

Any questions concerning this decision should be directed to J. Harrison, TC 3700 Special Programs Examiner at 571-272-4449.

Decision held in ABEYANCE.

Karen M. Young

Karen M. Young, Director
Technology center 3700

UNITED STATES PATENT AND TRADEMARK OFFICE

Commissioner for Patents
United States Patent and Trademark Office
P.O. Box 1450
Alexandria, VA 22313-1450
www.uspto.gov

BEYER WEAVER LLP
P.O. BOX 70250
OAKLAND, CA 94612-0250

AUG 20 2007

In re Application of:
Thomas Lindquist
Serial No.: 11/072173
Filed: March 4, 2005
Docket: 20104.03
Title: GAMBLING CHIP RECOGNITION SYSTEM

DECISION ON PETITION
UNDER 37 C.F.R. 1.59

This is a response to the petition under 37 CFR 1.59(b), filed February 5, 2007 to expunge information from the above identified application.

The decision on the petition will be held in abeyance until allowance of the application or mailing of an *Ex parte Quayle* action or a Notice of Abandonment, at which time the petition will be decided.

Applicant previously filed petitions on May 12, 2006, June 5, 2006, and July 17, 2006 requesting that the information submitted in each of the previous Information Disclosure Statements be expunged from the record. On August 29, 2006, the decision was held in abeyance until prosecution on the merits was closed and the examiner could determine whether the documents were considered "material."

Applicant requests in this petition that materials listed as Other Documents C1-C12 on the accompanying PTO-1449 be expunged. Petitioner states either: (A) that the information contains trade secret material, proprietary material and/or material that is subject to a protective order which has not been made public; or (B) that the information submitted was unintentionally submitted and the failure to obtain its return would cause irreparable harm to the party who submitted the information or to the party in interest on whose behalf the information was submitted, and the information has not otherwise been made public. Office records indicate that the petition fee set forth in 37 CFR 1.17(g) has been paid.

Under MPEP 724.05(I), a petition to expunge information under MPEP 724.02 must contain:

(A) a clear identification of the information to be expunged without disclosure of the details thereof;

(B) a clear statement that the information to be expunged is trade secret material, proprietary material, and/or subject to a protective order, and that the information has not been otherwise made public;

(C) a commitment on the part of the petitioner to retain such information for the period of any patent with regard to which such information is submitted;
(D) a statement that the petition to expunge is being submitted by, or on behalf of, the party in interest who originally submitted the information; and
(E) the fee as set forth in 37 CFR 1.17(g) for a petition under 37 CFR 1.59(b).

Although petitioner satisfies each of these requirements, prosecution on the merits is not closed. Accordingly, it is not appropriate to make a final determination of whether or not the material requested to be expunged in "material" with "materiality" being defined as any information which the examiner considers as being important to a determination of patentability of the claims. Thus, the decision on the petition to expunge must be held in abeyance at this time.

During prosecution of the merits, the examiner will determine whether or not the identified document is considered to be "material." If the information is not considered by the examiner to be material, the information will be removed from the official file. The information has been closed from public view for the remainder of prosecution.

Questions concerning this decision should be directed to Special Programs Examiner J. Harrison at 571-272-4449.

Karen M. Young, Director
Technology Center 3700

UNITED STATES PATENT AND TRADEMARK OFFICE

Commissioner for Patents
United States Patent and Trademark Office
P.O. Box 1450
Alexandria, VA 22313-1450
www.uspto.gov

BEYER WEAVER LLP
P.O. BOX 70250
OAKLAND CA 94612-0250

11/21/07

In re Application of :
Lindquist, Thomas :
Appl. No.: 11/072,173 : DECISION ON PETITION
Filed: Mar. 4, 2005 : Under 37 CFR 1.59
For:GAMBLING CHIP RECOGNITION SYSTEM :

This is a response to the petition under 37 CFR 1.59(b), filed on Feb. 5, 2007 by which petitioners request to expunge information from the above identified application.

The petition is granted.

Petitioner requests that documents listed on the Information Disclosure Statements under M.P.E.P. § 724 filed on May 12, 2006, Jun. 5, 2006 and Jul. 17, 2006 be expunged from the record. In the earlier decision mailed on Aug. 20, 2007, petitioner was informed that the requested relief was held in abeyance until allowance or abandonment of the application. On Nov. 16, 2007, a notice of abandonment was mailed. The information in question also has been determined by the undersigned to not be material to the examination of the instant application.

In view of the fact that petitioner has met the requirements of MPEP 724.05(I) as indicated in the earlier decision mailed on Aug. 20, 2007, the proprietary information disclosure statements filed on May 12, 2006, Jun. 5, 2006 and Jul. 17, 2006 are now removed from the official file and have been shredded.

Applicant is required to retain the expunged material(s) for the life on any patent which issues on the above-identified application.

Petition to expunge GRANTED.

Frederick R. Schmidt, Director
Technology Center 3700

UNITED STATES PATENT AND TRADEMARK OFFICE

COMMISSIONER FOR PATENTS
UNITED STATES PATENT AND TRADEMARK OFFICE
P.O. BOX 1450
ALEXANDRIA, VA 22313-1450
www.uspto.gov

Stephen B. Davis
Bristol-Meyers Squibb Company
Patent Department
P. O. Box 4000
Princeton, NJ 08543-4000

COPY MAILED

SEP 26 2005

OFFICE OF PETITIONS

In re Application of	:	
Fei Huang, et al.	:	
Application No. 11/072,175	:	DECISION GRANTING
Filed: March 4, 2005	:	PETITION
Attorney Docket No. D0273A CIP	:	

This is a decision on the petition filed June 30, 2005, requesting that the above-identified application be accorded a filing date of March 4, 2005, rather than the presently accorded date of March 5, 2005. The petition is properly treated as a petition under 37 CFR 1.10(c).

The petition is **GRANTED**.

Petitioner requests the earlier filing date on the basis that the application was purportedly deposited with Express Mail Service on March 4, 2005 pursuant to 37 CFR 1.10. While the copy of the Express Mail label receipt no. EL983152902US bears a handwritten "date-in" of March 5, 2005, it also includes a USPS receipt date stamp of March 4, 2005. Petitioner is alleging that the date of mailing shown in the "date-in" is a U. S. Postal Service (USPS) error and the correct date of mailing pursuant to 37 CFR 1.10 is March 4, 2005.

The Office considers the date the paper or fee is shown to have been deposited as "Express Mail" to be the "date-in" on the Express Mail label, MPEP 513. However, in view of the conflicting dates on the label, a search of the USPS' Express Mail Track and Confirm database was made and confirms that the package bearing Express Mail label No. EL983152902US was accepted on March 4, 2005.

This application file is being returned to the Office of Initial Patent Examination (OIPE) for **correction of the filing date to March 4, 2005 and issuance of a corrected filing receipt.**

Telephone inquiries relating to this decision should be directed to the undersigned at (571) 272-3223. Telephone inquiries related to OIPE processing should be directed to their hotline at (703) 308-1202.

Marianne E. Jenkins
Petitions Examiner
Office of Petitions

UNITED STATES PATENT AND TRADEMARK OFFICE

Commissioner for Patents
United States Patent and Trademark Office
P.O. Box 1450
Alexandria, VA 22313-1450
www.uspto.gov

DEC 01 2005

GREENBERG TRAURIG LLP
MET LIFE BUILDING
200 PARK AVENUE; 14TH FLOOR
NEW YORK NY 10166

In re Application of	:	
Rosen et al.	:	
Serial No.: 11/072,178	:	DECISION ON PETITION
Filed: March 4, 2005	:	
For: Combination Insulin Pen and	:	
Transmission Device	:	

This is in response to applicants' petition filed June 14, 2005 to make the above-identified application special under the provisions of 37 CFR 1.102(c), based on the age of the applicant.

Applicant has satisfied the provisions set forth in M.P.E.P. 708.02, IV. Therefore the petition is **GRANTED**.

The application will be forwarded to the examiner for action on the merits commensurate with this decision.

Should there be any questions with regard to this letter please contact Frederick Schmidt by letter addressed to the Director, Technology Center 3700, P.O. Box 1450 Alexandria, VA 22313-1450, or by telephone at (571) 272-2975 or by facsimile transmission at (571) 273-8300.

Frederick R. Schmidt

Frederick R. Schmidt, Director
Technology Center 3700

UNITED STATES PATENT AND TRADEMARK OFFICE

UNITED STATES DEPARTMENT OF COMMERCE
United States Patent and Trademark Office
Address: COMMISSIONER FOR PATENTS
P.O. Box 1450
Alexandria, Virginia 22313-1450
www.uspto.gov

THE FARRELL LAW FIRM, LLP
290 Broadhollow Road
Suite 210E
Melville, NY 11747

Mail Date: 04/21/2010

Applicant	: Jae-Hyok Lee	: DECISION ON REQUEST FOR
Patent Number	: 7636571	: RECALCULATION of PATENT
Issue Date	: 12/22/2009	: TERM ADJUSTMENT IN VIEW
Appliction No	: 11/072,181	: OF WYETH AND NOTICE OF INTENT TO
Filed	: 03/04/2005	: ISSUE CERTIFICATE OF CORRECTION
		:

The Request for Recalculation is **GRANTED** to the extent indicated.

The patent term adjustment has been determined to be **43** days. The USPTO will *sua sponte* issue a certificate of correction reflecting the amount of PTA days determined by the recalculation.

Prior to the issuance of the certificate of correction, the USPTO will afford patentee an opportunity to be heard and request reconsideration. Accordingly, patentee has **one month or thirty (30) days**, whichever is longer, to file a request for reconsideration of this patent term adjustment calculation. See 35 U.S.C. 154(b)(3)(B)(ii) and 37 CFR 1.322(a)(4). No extensions of time will be granted under 37 CFR 1.136.

Patentee should use document code PET.OP if electronically filing a request for reconsideration of this patent term adjustment calculation. The patentee must also include the information required by 37 CFR 1.705(b)(2) and the fee required by 37 CFR 1.18(e). If patentee does not file a timely request for reconsideration of this patent term adjustment calculation including the information required by 37 CFR 1.705(b)(2) and the fee required by 37 CFR 1.18(e), the USPTO will issue a certificate of correction reflecting the PTA determination noted above.

Patentee should be aware that in order to preserve the right to review in the United States District Court for the District of Columbia of the USPTO patent term adjustment determination, patentee must ensure that he or she also take the steps required under 35 U.S.C. 154(b)(4)(A) in a timely manner. Nothing in the request for recalculation should be construed as providing an alternative time frame for commencing a civil action under 35 U.S.C. 154(b)(4)(A).

Any questions concerning this decision should be directed to the Office of Patent Legal Administration at 571-272-7702.

SPE RESPONSE FOR CERTIFICATE OF CORRECTION

Paper No.: _____

DATE : **7-7-10**

TO SPE OF : ART UNIT **2828**

SUBJECT : Request for Certificate of Correction for Appl. No.: **11072192** Patent No.: **7346087**

Please respond to this request for a certificate of correction within 7 days.

FOR IFW FILES:

Please review the requested changes/corrections as shown in the **COCIN** document(s) in the IFW application image. No new matter should be introduced, nor should the scope or meaning of the claims be changed.

Please complete the response (see below) and forward the completed response to scanning using document code **COCX**.

FOR PAPER FILES:

Please review the requested changes/corrections as shown in the attached certificate of correction. Please complete this form (see below) and forward it with the file to:

Certificates of Correction Branch (C of C)
Randolph Square – 9D10-E
Palm Location 7580

Omega Lewis
Certificates of Correction Branch

703-756-1575

Thank You For Your Assistance

The request for issuing the above-identified correction(s) is hereby:
Note your decision on the appropriate box.

- ☒ **Approved** — **All** changes apply.
- ☐ **Approved in Part** — Specify below which changes **do not** apply.
- ☐ **Denied** — State the reasons for denial below.

Comments: _____

MINSUN OH HARVEY
PRIMARY EXAMINER

SPE 2828 **Art Unit**

UNITED STATES PATENT AND TRADEMARK OFFICE

Commissioner for Patents
United States Patent and Trademark Office
P.O. Box 1450
Alexandria, VA 22313-1450
www.uspto.gov

MCANDREWS HELD & MALLOY, LTD
500 WEST MADISON STREET
SUITE 3400
CHICAGO IL 60661

MAILED

JUN 22 2009

OFFICE OF PETITIONS

In re Application of :
Chengfuh Jeffrey **TANG** et al. :
Application No. 11/072,201 : DECISION ON PETITION
Filed: March 04, 2005 : UNDER 37 CFR 1.78(a)(3)
Attorney Docket No. **16233US01** :

This is a decision on the petition under 37 CFR 1.78(a)(3), filed May 26, 2009, to accept an unintentionally delayed claim under 35 U.S.C. § 120 for the benefit of priority to the prior-filed nonprovisional applications set forth in the amendment filed with the petition.

The petition is **GRANTED**.

A petition for acceptance of a claim for late priority under 37 CFR 1.78(a)(3) is only applicable to those applications filed on or after November 29, 2000. Further, the petition is appropriate only after the expiration of the period specified in 37 CFR 1.78(a)(2)(ii). In addition, the petition under 37 CFR 1.78(a)(3) must be accompanied by:

(1) the reference required by 35 U.S.C. § 120 and 37 CFR 1.78(a)(2)(i) of the prior-filed application, unless previously submitted;
(2) the surcharge set forth in § 1.17(t); and
(3) a statement that the entire delay between the date the claim was due under 37 CFR 1.78(a)(2)(ii) and the date the claim was filed was unintentional. The Director may require additional information where there is a question whether the delay was unintentional.

All of the above requirements having been satisfied, the late claim for priority under 35 U.S.C. § 120 is accepted as being unintentionally delayed.

The granting of the petition to accept the delayed benefit claim to the prior-filed applications under 37 CFR 1.78(a)(3) should not be construed as meaning that this application is entitled to the benefit of the prior-filed applications. In order for this application to be entitled to the

benefit of the prior-filed applications, all other requirements under 35 U.S.C. § 120 and 37 CFR 1.78(a)(1) and (a)(2) must be met. Similarly, the fact that the corrected Filing Receipt accompanying this decision on petition includes the prior-filed applications should not be construed as meaning that applicant is entitled to the claim for benefit of priority to the prior-filed applications noted thereon. Accordingly, the examiner will, in due course, consider this benefit claim and determine whether the application is entitled to the benefit of the earlier filing date.

A corrected Filing Receipt, which includes the priority claim to the prior-filed nonprovisional applications, accompanies this decision on petition.

Any inquiries concerning this decision may be directed to Michelle R. Eason at (571) 272-4231. All other inquiries concerning either the examination procedures or status of the application should be directed to the Technology Center.

This application is being forwarded to Technology Center Art Unit 2628 for consideration by the examiner of applicant's entitlement to claim benefit of priority under 35 U.S.C. § 120 to the prior-filed applications.

Thurman Page
Petitions Examiner
Office of Petitions

ATTACHMENT: Corrected Filing Receipt

UNITED STATES PATENT AND TRADEMARK OFFICE

UNITED STATES DEPARTMENT OF COMMERCE
United States Patent and Trademark Office
Address: COMMISSIONER FOR PATENTS
P.O. Box 1450
Alexandria, Virginia 22313-1450
www.uspto.gov

APPLICATION NUMBER	FILING or 371(c) DATE	GRP ART UNIT	FIL FEE REC'D	ATTY.DOCKET.NO	TOT CLAIMS	IND CLAIMS
11/072,201	03/04/2005	2628	2550	16233US01	23	3

CONFIRMATION NO. 5822

CORRECTED FILING RECEIPT

23446
MCANDREWS HELD & MALLOY, LTD
500 WEST MADISON STREET
SUITE 3400
CHICAGO, IL 60661

OC000000036592560

Date Mailed: 06/22/2009

Receipt is acknowledged of this non-provisional patent application. The application will be taken up for examination in due course. Applicant will be notified as to the results of the examination. Any correspondence concerning the application must include the following identification information: the U.S. APPLICATION NUMBER, FILING DATE, NAME OF APPLICANT, and TITLE OF INVENTION. Fees transmitted by check or draft are subject to collection. Please verify the accuracy of the data presented on this receipt. **If an error is noted on this Filing Receipt, please submit a written request for a Filing Receipt Correction. Please provide a copy of this Filing Receipt with the changes noted thereon. If you received a "Notice to File Missing Parts" for this application, please submit any corrections to this Filing Receipt with your reply to the Notice. When the USPTO processes the reply to the Notice, the USPTO will generate another Filing Receipt incorporating the requested corrections**

Applicant(s)

Chengfuh Jeffrey Tang, Saratoga, CA;
Steven (Yao-Hua) Tseng, Fremont, CA;

Power of Attorney: The patent practitioners associated with Customer Number 23446

Domestic Priority data as claimed by applicant

This application is a CIP of 10/712,809 11/13/2003 PAT 7,002,602
which is a CON of 09/437,348 11/09/1999 PAT 6,700,588
which claims benefit of 60/107,875 11/09/1998

Foreign Applications

If Required, Foreign Filing License Granted: 03/28/2005

The country code and number of your priority application, to be used for filing abroad under the Paris Convention, is **US 11/072,201**

Projected Publication Date: Not Applicable

Non-Publication Request: No

Early Publication Request: No

Title

Low resolution graphics mode support using window descriptors

Preliminary Class

345

PROTECTING YOUR INVENTION OUTSIDE THE UNITED STATES

Since the rights granted by a U.S. patent extend only throughout the territory of the United States and have no effect in a foreign country, an inventor who wishes patent protection in another country must apply for a patent in a specific country or in regional patent offices. Applicants may wish to consider the filing of an international application under the Patent Cooperation Treaty (PCT). An international (PCT) application generally has the same effect as a regular national patent application in each PCT-member country. The PCT process **simplifies** the filing of patent applications on the same invention in member countries, but **does not result** in a grant of "an international patent" and does not eliminate the need of applicants to file additional documents and fees in countries where patent protection is desired.

Almost every country has its own patent law, and a person desiring a patent in a particular country must make an application for patent in that country in accordance with its particular laws. Since the laws of many countries differ in various respects from the patent law of the United States, applicants are advised to seek guidance from specific foreign countries to ensure that patent rights are not lost prematurely.

Applicants also are advised that in the case of inventions made in the United States, the Director of the USPTO must issue a license before applicants can apply for a patent in a foreign country. The filing of a U.S. patent application serves as a request for a foreign filing license. The application's filing receipt contains further information and guidance as to the status of applicant's license for foreign filing.

Applicants may wish to consult the USPTO booklet, "General Information Concerning Patents" (specifically, the section entitled "Treaties and Foreign Patents") for more information on timeframes and deadlines for filing foreign patent applications. The guide is available either by contacting the USPTO Contact Center at 800-786-9199, or it can be viewed on the USPTO website at http://www.uspto.gov/web/offices/pac/doc/general/index.html.

For information on preventing theft of your intellectual property (patents, trademarks and copyrights), you may wish to consult the U.S. Government website, http://www.stopfakes.gov. Part of a Department of Commerce initiative, this website includes self-help "toolkits" giving innovators guidance on how to protect intellectual property in specific countries such as China, Korea and Mexico. For questions regarding patent enforcement issues, applicants may call the U.S. Government hotline at 1-866-999-HALT (1-866-999-4158).

LICENSE FOR FOREIGN FILING UNDER

Title 35, United States Code, Section 184

Title 37, Code of Federal Regulations, 5.11 & 5.15

GRANTED

The applicant has been granted a license under 35 U.S.C. 184, if the phrase "IF REQUIRED, FOREIGN FILING LICENSE GRANTED" followed by a date appears on this form. Such licenses are issued in all applications where the conditions for issuance of a license have been met, regardless of whether or not a license may be required as

set forth in 37 CFR 5.15. The scope and limitations of this license are set forth in 37 CFR 5.15(a) unless an earlier license has been issued under 37 CFR 5.15(b). The license is subject to revocation upon written notification. The date indicated is the effective date of the license, unless an earlier license of similar scope has been granted under 37 CFR 5.13 or 5.14.

This license is to be retained by the licensee and may be used at any time on or after the effective date thereof unless it is revoked. This license is automatically transferred to any related applications(s) filed under 37 CFR 1.53(d). This license is not retroactive.

The grant of a license does not in any way lessen the responsibility of a licensee for the security of the subject matter as imposed by any Government contract or the provisions of existing laws relating to espionage and the national security or the export of technical data. Licensees should apprise themselves of current regulations especially with respect to certain countries, of other agencies, particularly the Office of Defense Trade Controls, Department of State (with respect to Arms, Munitions and Implements of War (22 CFR 121-128)); the Bureau of Industry and Security, Department of Commerce (15 CFR parts 730-774); the Office of Foreign AssetsControl, Department of Treasury (31 CFR Parts 500+) and the Department of Energy.

NOT GRANTED

No license under 35 U.S.C. 184 has been granted at this time, if the phrase "IF REQUIRED, FOREIGN FILING LICENSE GRANTED" DOES NOT appear on this form. Applicant may still petition for a license under 37 CFR 5.12, if a license is desired before the expiration of 6 months from the filing date of the application. If 6 months has lapsed from the filing date of this application and the licensee has not received any indication of a secrecy order under 35 U.S.C. 181, the licensee may foreign file the application pursuant to 37 CFR 5.15(b).

UNITED STATES PATENT AND TRADEMARK OFFICE

UNITED STATES DEPARTMENT OF COMMERCE
United States Patent and Trademark Office
Address: COMMISSIONER FOR PATENTS
P.O. Box 1450
Alexandria, Virginia 22313-1450
www.uspto.gov

KNOBBE MARTENS OLSON & BEAR LLP
2040 MAIN STREET
FOURTEENTH FLOOR
IRVINE, CA 92614

Mail Date: 05/25/2010

Applicant	: Gabriel Enrique Soto	: DECISION ON REQUEST FOR
Patent Number	: 7643969	: RECALCULATION of PATENT
Issue Date	: 01/05/2010	: TERM ADJUSTMENT IN VIEW
Application No	: 11/072,209	: OF WYETH AND NOTICE OF INTENT TO
Filed	: 03/04/2005	: ISSUE CERTIFICATE OF CORRECTION
		:

The Request for Recalculation is **GRANTED** to the extent indicated.

The patent term adjustment has been determined to be **794** days. The USPTO will *sua sponte* issue a certificate of correction reflecting the amount of PTA days determined by the recalculation.

Prior to the issuance of the certificate of correction, the USPTO will afford patentee an opportunity to be heard and request reconsideration. Accordingly, patentee has **one month or thirty (30) days**, whichever is longer, to file a request for reconsideration of this patent term adjustment calculation. See 35 U.S.C. 154(b)(3)(B)(ii) and 37 CFR 1.322(a)(4). No extensions of time will be granted under 37 CFR 1.136.

Patentee should use document code PET.OP if electronically filing a request for reconsideration of this patent term adjustment calculation. The patentee must also include the information required by 37 CFR 1.705(b)(2) and the fee required by 37 CFR 1.18(e). If patentee does not file a timely request for reconsideration of this patent term adjustment calculation including the information required by 37 CFR 1.705(b)(2) and the fee required by 37 CFR 1.18(e), the USPTO will issue a certificate of correction reflecting the PTA determination noted above.

Patentee should be aware that in order to preserve the right to review in the United States District Court for the District of Columbia of the USPTO patent term adjustment determination, patentee must ensure that he or she also take the steps required under 35 U.S.C. 154(b)(4)(A) in a timely manner. Nothing in the request for recalculation should be construed as providing an alternative time frame for commencing a civil action under 35 U.S.C. 154(b)(4)(A).

Any questions concerning this decision should be directed to the Office of Patent Legal Administration at 571-272-7702.

UNITED STATES PATENT AND TRADEMARK OFFICE

Commissioner for Patents
United States Patent and Trademark Office
P.O. Box 1450
Alexandria, VA 22313-1450
www.uspto.gov

Paper No.

MERCHANT & GOULD PC
P.O. BOX 2903
MINNEAPOLIS MN 55402-0903

COPY MAILED
SEP 29 2008

In re Application of Richard Clinton Dyer Application No. 11/072,210 Filed: March 4, 2005 Attorney Docket No. 15872.0100US01/HSJ9200402 Title: METHOD AND SYSTEM FOR REDUCING PRODUCTION CYCLE TIME OF A HARD DISK DRIVE BY FEATURING AN INVENTORIED GENERIC HARD DISK DRIVE WITH CUSTOMIZED MICROCODE	DECISION ON PETITION PURSUANT TO 37 C.F.R. § 1.137(B)

This is a decision on the petition filed May 22, 2008, pursuant to 37 C.F.R. § 1.137(b), to revive the above-identified application. A supplement to this petition was filed on May 30, 2008.

This petition is **GRANTED**.

The above-identified application became abandoned for failure to submit the issue and publication fees in a timely manner in reply to the Notice of Allowance and Issue Fee Due, mailed January 15, 2005, which set a shortened statutory period for reply of three months. No extensions of time are permitted for transmitting

issue or publication fees.[1] Accordingly, the above-identified application became abandoned on April 16, 2008. A Notice of Abandonment was mailed on May 14, 2008.

A grantable petition pursuant to 37 C.F.R. § 1.137(b) must be accompanied by:

(1) The reply required to the outstanding Office action or notice, unless previously filed;
(2) The petition fee as set forth in 37 C.F.R. § 1.17(m);
(3) A statement that the entire delay in filing the required reply from the due date for the reply until the filing of a grantable petition pursuant to this paragraph was unintentional. The Commissioner may require additional information where there is a question whether the delay was unintentional, and;
(4) Any terminal disclaimer (and fee as set forth in 37 C.F.R. § 1.20(d)) required pursuant to paragraph (d) of this section.

With this petition, Petitioner has included the petition, issue, and publication fees, along with the proper statement of unintentional delay.

The first three requirements of Rule 1.137(b) have been met. The fourth requirement of Rule 1.137(b) is not applicable, as a terminal disclaimer is not required.

Pursuant to this decision, the Office of Patent Publication will be notified of this decision so that the present application can be processed into a patent.

Petitioner may find it beneficial to view Private PAIR within a fortnight of the present decision to ensure that the revival has been acknowledged by the Office of Patent Publication in response to this decision. It is noted that all inquiries with regard to any failure of that change in status should be directed to the Office of Patent Publication where that change of status must be effected - **the Office of Petitions cannot effectuate a change of status.**

Telephone inquiries regarding *this decision* should be directed to the undersigned at (571) 272-3225.[2] All other inquiries

---

1 See MPEP § 710.02(e).
2 Petitioner will note that all practice before the Office should be in

concerning the status of the application should be directed to the Office of Patent Publication at 571-272-4200.

/Paul Shanoski/
Paul Shanoski
Senior Attorney
Office of Petitions

---

writing, and the action of the Office will be based exclusively on the written record in the Office. See 37 C.F.R. § 1.2. As such, Petitioner is reminded that no telephone discussion may be controlling or considered authority for any further action(s) of Petitioner.

UNITED STATES PATENT AND TRADEMARK OFFICE

Commissioner for Patents
United States Patent and Trademark Office
P.O. Box 1450
Alexandria, VA 22313-1450
www.uspto.gov

INTEL CORPORATION
C/O CPA GLOBAL
P.O. BOX 52050
MINNEAPOLIS MN 55402

COPY MAILED
MAR 2 3 2009
OFFICE OF PETITIONS

In re Application of	:	
Taylor	:	
Application No. 11/072,212	:	DECISION
Filed: 4 March, 2005	:	
Attorney Docket No. P21187	:	

This is a decision on the petitions filed on 17 February, 2009, to revive an application under 37 C.F.R. §1.137(b) as having been abandoned due to unintentional delay.

The petition as considered under 37 C.F.R. §1.137(b) is **GRANTED**.

As to Allegations of
Unintentional Delay

The requirements of a grantable petition pursuant to 37 C.F.R. §1.137(b) are the petition and fee therefor, a reply, a proper statement of unintentional delay under the regulation, and, where applicable, a terminal disclaimer and fee. (However, it does not appear that a terminal disclaimer and fee are due here.)

BACKGROUND

The record reflects as follows:

Petitioner failed to reply timely and properly to Notice of Allowance/Allowability and Fees Due mailed on 8 October, 2008, with reply due under a non-extendable deadline on or before 8 January, 2009.

On 8 January, 2008, Petitioner sought to pay the Fees Due with an authorization of charges to a deposit account, however, there were not sufficient funds in the account to accommodate that authorization.

The application went abandoned after midnight 8 January, 2009.

The Office mailed a Notice of Abandonment on 3 February, 2009.

On 17 February, 2009, Petitioner filed, *inter alia*, a petition (with fee) pursuant to 37 C.F.R. §1.137(b) averring unintentional delay, a reply in the form of fees due, and made the statement of unintentional delay.

The availability of applications and application papers online to applicants/practitioners who diligently associate their Customer Number with the respective application(s) now provides an applicant/practitioner on-demand information as to events/transactions in an application.

Out of an abundance of caution, Petitioners always are reminded that those registered to practice and all others who make representations before the Office **must** inquire into the underlying facts of representations made to the Office and support averments with the appropriate documentation–since all owe to the Office the continuing duty to disclose.[1]

STATUTES, REGULATIONS AND ANALYSIS

Congress has authorized the Commissioner to "revive an application if the delay is shown to the satisfaction of the Commissioner to have been "unavoidable." 35 U.S.C. §133 (1994).[2]
The regulations at 37 C.F.R. §1.137(a) and (b) set forth the requirements for a Petitioner to revive a previously unavoidably or unintentionally, respectively, abandoned application under this congressional grant of authority.

Unintentional delays are those that do not satisfy the very strict statutory and regulatory requirements of unavoidable delay, and also, by definition, are not intentional.[3]))

As to Allegations of Unintentional Delay

It appears that the requirements under 37 C.F.R. §1.137(b) have been satisfied.

---

[1] See supplement of 17 June, 1999. The Patent and Trademark Office is relying on petitioner's duty of candor and good faith and accepting a statement made by Petitioner. See Changes to Patent Practice and Procedure, 62 Fed. Reg. at 53160 and 53178, 1203 Off. Gaz. Pat. Office at 88 and 103 (responses to comments 64 and 109)(applicant obligated under 37 C.F.R. §10.18 to inquire into the underlying facts and circumstances when providing statements to the Patent and Trademark Office).

[2] 35 U.S.C. §133 provides:

35 U.S.C. §133 Time for prosecuting application.
Upon failure of the applicant to prosecute the application within six months after any action therein, of which notice has been given or mailed to the applicant, or within such shorter time, not less than thirty days, as fixed by the Commissioner in such action, the application shall be regarded as abandoned by the parties thereto, unless it be shown to the satisfaction of the Commissioner that such delay was unavoidable.

[3] Therefore, by example, an unintentional delay in the reply might occur if the reply and transmittal form are to be prepared for shipment by the US Postal Service, but other pressing matters distract one's attention and the mail is not timely deposited for shipment.

CONCLUSION

Accordingly, the petition under 37 C.F.R. §1.137(b) is **granted**.

The instant application is released to the Office of Data Management (ODM) for further processing in due course.

Petitioner may find it beneficial to view Private PAIR within a fortnight of the instant decision to ensure that the revival has been acknowledged by the ODM in response to this decision. It is noted that all inquiries with regard to that change in status need be directed to the ODM where that change of status must be effected—that does not occur in the Office of Petitions.

Telephone inquiries regarding this decision may be directed to the undersigned at (571) 272-3214—it is noted, however, that all practice before the Office is in writing (see: 37 C.F.R. §1.2[4]) and the proper authority for action on any matter in this regard are the statutes (35 U.S.C.), regulations (37 C.F.R.) and the commentary on policy (MPEP). Therefore, no telephone discussion may be controlling or considered authority for Petitioner's action(s).

/John J. Gillon, Jr./
John J. Gillon, Jr.
Senior Attorney
Office of Petitions

[4] The regulations at 37 C.F.R. §1.2 provide:
§1.2 Business to be transacted in writing.
All business with the Patent and Trademark Office should be transacted in writing. The personal attendance of applicants or their attorneys or agents at the Patent and Trademark Office is unnecessary. The action of the Patent and Trademark Office will be based exclusively on the written record in the Office. No attention will be paid to any alleged oral promise, stipulation, or understanding in relation to which there is disagreement or doubt.

UNITED STATES PATENT AND TRADEMARK OFFICE

Commissioner for Patents
United States Patent and Trademark Office
P.O. Box 1450
Alexandria, VA 22313-1450
www.uspto.gov

MCHALE & SLAVIN, P.A.
2855 PGA BLVD
PALM BEACH GARDENS, FL
33410

COPY MAILED
SEP 28 2007
OFFICE OF PETITIONS

In re Application of

Gloria McCall Kanahele, et al. :

Application No. 11/072,218 :

: DECISION ON PETITION

Filed: March 3, 2005 :

Attorney Docket No. 2524.005

This is a decision on the petition under 37 CFR 1.137(b), filed January 22, 2007, to revive the above-identified application.

The petition is **GRANTED**.

The above-cited application became abandoned for failure to reply in a timely manner to the non-final Office action mailed February 16, 2006, which set a shortened statutory period for reply of three (3) months from its mailing date. No extension of time pursuant to 37 CFR 1.136(a) was obtained within the allowable period. Accordingly, the application became abandoned on May 17, 2006. A Notice of Abandonment was mailed on September 14, 2006.

The amendment filed January 22, 2007, is noted.

The application is being forwarded to Technology Center 3700, GAU 3711 for further processing.

Telephone inquiries concerning this decision should be directed to the undersigned at (571) 272-3222.

Kenya A. McLaughlin
Petitions Attorney
Office of Petitions

UNITED STATES PATENT AND TRADEMARK OFFICE

Commissioner for Patents
United States Patent and Trademark Office
P.O. Box 1450
Alexandria, VA 22313-1450
www.uspto.gov

JON HOKANSON
COUDERT BROTHERS, LLP
333 S HOPE STREET
SUITE 2300
LOS ANGELES, CA 90071

COPY MAILED

NOV 16 2006

OFFICE OF PETITIONS

In re Application of	:	
David Allen Faudman	:	
Application No. 11/072,221	:	DECISION ON PETITION
Filed: March 3, 2005	:	TO WITHDRAW
Attorney Docket No. FAUD-DIV	:	FROM RECORD
	:	

This is a decision on the Request to Withdraw as attorney or agent under 37 C.F.R. § 1.36(b) or 37 C.F.R. § 10.40 filed August 18, 2006

The request is **APPROVED**.

A review of the file record indicates that Jon Hokanson: (1) does not have power of attorney in this patent application; and (2) has been employed or otherwise engaged in the proceedings in this patent application. In view of the present decision, Jon Haokanson has/have been withdrawn from the present application and may not prepare or submit papers under 37 C.F.R. § 1.34, or correspond in any manner in this application unless appointed in an acceptable power of attorney under 37 C.F.R. § 1.32(b).

The Associate Power of Attorney filed with the petition on April 18, 2006, was filed after June 25, 2004, the effective date of a rule change eliminating the Associate Power of Attorney practice (37 CFR 1.34(b) was eliminated). *See* MPEP § 402.02 and Revision of Power of Attorney and Assignment Practice, 69 Fed. Reg. 29865 (May 26, 2004); 1283 Off. Gaz. 148 (June 22, 2004). Although the paper has been placed in the file, the names of the patent practitioners listed on the Associate Power of Attorney have not been made of record. However, as requested, and since an attorney of record signed the Associate Power of Attorney, the correspondence address has not been changed to the address noted in the document.

Applicant is reminded that Risto Rinne remains attorney of record at this time.

There is no outstanding Office action pending at the present time that requires a reply from the applicant.

Telephone inquires concerning this decision should be directed to the undersigned at 571-272-1642.

April M. Wise
Petitions Examiner
Office of Petitions

UNITED STATES PATENT AND TRADEMARK OFFICE

Commissioner for Patents
United States Patent and Trademark Office
P.O. Box 1450
Alexandria, VA 22313-1450
www.uspto.gov
DIW Mar-06

SUGHRUE MION, PLLC
2100 PENNSYLVANIA AVENUE, N.W.
SUITE 800
WASHINGTON DC 20037

COPY MAILED

APR 0 4 2006

OFFICE OF PETITIONS

In re Application of	:	
Itoh et al.	:	
Application No. 11/072,226	:	DECISION ON PETITION
Filed: 7 March, 2005	:	
Atty Docket No. Q86659	:	

This is a decision on the petition filed on 23 December, 2005, under 37 CFR 1.137(b),[1] to revive the above-identified application.

The petition is **GRANTED**.

The application became abandoned on 30 May, 2005, for failure to timely submit an executed oath or declaration and surcharge for its late filing in response to the Notice to File Missing Parts

---

[1] Effective December 1, 1997, the provisions of 37 CFR 1.137(b) now provide that where the delay in reply was unintentional, a petition may be filed to revive an abandoned application or a lapsed patent pursuant to 37 CFR 1.137(b). A grantable petition filed under the provisions of 37 CFR 1.137(b) must be accompanied by:

(1) the required reply, unless previously filed. In a nonprovisional application abandoned for failure to prosecute, the required reply may be met by the filing of a continuing application. In a nonprovisional utility or plant application filed on or after June 8, 1995, and abandoned for failure to prosecute, the required reply may also be met by the filing of a request for continuing examination in compliance with § 1.114. In an application or patent, abandoned or lapsed for failure to pay the issue fee or any portion thereof, the required reply must be the payment of the issue fee or any outstanding balance thereof. In an application, abandoned for failure to pay the publication fee, the required reply must include payment of the publication fee.

(2) the petition fee as set forth in 37 CFR 1.17(m);

(3) a statement that the entire delay in filing the required reply from the due date for the reply until the filing of a grantable petition pursuant to 37 CFR 1.137(b) was unintentional. The Commissioner may required additional information where there is a question whether the delay was unintentional; and

(4) any terminal disclaimer (and fee as set forth in 37 CFR 1.20(d)) required pursuant to 37 CFR 1.137(c)).

of Nonprovisional Application mailed on 4 April, 2005, which set a two (2) month shortened period for reply. No extensions of time in accordance with 37 CFR 1.136(a) were obtained. Notice of Abandonment was mailed on 7 December, 2005.

The present petition is accompanied by an executed declaration and the late-filing surcharge.

This application is being referred to the Office of Initial Patent Examination for further processing.

Telephone inquiries concerning this matter may be directed to the undersigned at (571) 272-3231.

DWood

Douglas I. Wood
Senior Petitions Attorney
Office of Petitions

UNITED STATES PATENT AND TRADEMARK OFFICE

UNITED STATES DEPARTMENT OF COMMERCE
United States Patent and Trademark Office
Address: COMMISSIONER FOR PATENTS
P.O. Box 1450
Alexandria, Virginia 22313-1450
www.uspto.gov

VENABLE LLP
P.O. BOX 34385
WASHINGTON, DC 20043-9998

Mail Date: 04/21/2010

Applicant	: Toshihiko Matsunaga	: DECISION ON REQUEST FOR
Patent Number	: 7602764	: RECALCULATION of PATENT
Issue Date	: 10/13/2009	: TERM ADJUSTMENT IN VIEW
Appliction No	: 11/072,234	: OF WYETH AND NOTICE OF INTENT TO
Filed	: 03/07/2005	: ISSUE CERTIFICATE OF CORRECTION
		:

The Request for Recalculation is **GRANTED** to the extent indicated.

The patent term adjustment has been determined to be **1106** days. The USPTO will *sua sponte* issue a certificate of correction reflecting the amount of PTA days determined by the recalculation.

Prior to the issuance of the certificate of correction, the USPTO will afford patentee an opportunity to be heard and request reconsideration. Accordingly, patentee has **one month or thirty (30) days**, whichever is longer, to file a request for reconsideration of this patent term adjustment calculation. See 35 U.S.C. 154(b)(3)(B)(ii) and 37 CFR 1.322(a)(4). No extensions of time will be granted under 37 CFR 1.136.

Patentee should use document code PET.OP if electronically filing a request for reconsideration of this patent term adjustment calculation. The patentee must also include the information required by 37 CFR 1.705(b)(2) and the fee required by 37 CFR 1.18(e). If patentee does not file a timely request for reconsideration of this patent term adjustment calculation including the information required by 37 CFR 1.705(b)(2) and the fee required by 37 CFR 1.18(e), the USPTO will issue a certificate of correction reflecting the PTA determination noted above.

Patentee should be aware that in order to preserve the right to review in the United States District Court for the District of Columbia of the USPTO patent term adjustment determination, patentee must ensure that he or she also take the steps required under 35 U.S.C. 154(b)(4)(A) in a timely manner. Nothing in the request for recalculation should be construed as providing an alternative time frame for commencing a civil action under 35 U.S.C. 154(b)(4)(A).

Any questions concerning this decision should be directed to the Office of Patent Legal Administration at 571-272-7702.

UNITED STATES PATENT AND TRADEMARK OFFICE

Commissioner for Patents
United States Patent and Trademark Office
P.O. Box 1450
Alexandria, VA 22313-1450
www.uspto.gov

ARENT FOX PLLC
1050 CONNECTICUT AVENUE NW
SUITE 400
WASHINGTON, DC 20036

COPY MAILED
SEP 15 2006
OFFICE OF PETITIONS

In re Application of	:
Hideaki Suzuki	:
Application No. 11/072,241	: DECISION GRANTING PETITION
Filed: March 7, 2005	: UNDER 37 CFR 1.313(c)(2)
Attorney Docket No. 108390-00092	:

This is a decision on the petition, filed September 15, 2006, under 37 CFR 1.313(c)(2) to withdraw the above-identified application from issue after payment of the issue fee.

The petition is **GRANTED**.

The above-identified application is withdrawn from issue for consideration of a submission under 37 CFR 1.114 (request for continued examination). See 37 CFR 1.313(c)(2).

Petitioner is advised that the issue fee paid on August 14, 2006 in the above-identified application cannot be refunded. If, however, the above-identified application is again allowed, petitioner may request that it be applied towards the issue fee required by the new Notice of Allowance.[1]

Telephone inquiries should be directed to the undersigned at (571) 272-3218.

This matter is being referred to Technology Center AU 2824 for processing of the request for continued examination under 37 CFR 1.114 and for consideration of the Information Disclosure Statement.

Frances Hicks
Petitions Examiner
Office of Petitions

C:\Documents and Settings\FHicks\My Documents\470\Sept9\072241.wpd

---

[1] *The request to apply the issue fee to the new Notice may be satisfied by completing and returning the new Part B – Fee(s) Transmittal Form (along with any balance due at the time of submission). Petitioner is advised that the Issue Fee Transmittal Form must be completed and timely submitted to avoid abandonment.*

UNITED STATES PATENT AND TRADEMARK OFFICE

Commissioner for Patents
United States Patent and Trademark Office
P.O. Box 1450
Alexandria, VA 22313-1450
www.uspto.gov

VINCENT PATENT AGENCY
11-300 EARL GREY DRIVE, SUITE 202
KANATA ON K2T 1C1 CA **CANADA**

MAILED

MAY 24 2010

OFFICE OF PETITIONS

In re Application of	:	
Daniel Biage, et. al.	:	
Application No. 11/072,262	:	DECISION ON PETITION
Filed: March 7, 2005	:	TO WITHDRAW FROM
Attorney Docket No. 10260	:	RECORD

This is a decision on the Request to Withdraw as attorney or agent of record under 37 CFR §§ 1.36(b) or 10.40 filed February 21, 2010.

The request is **APPROVED**.

The request was signed by Robert A. Vincent on behalf of himself and all attorneys/agents associated with Customer Number 58166. Therefore, Robert A. Vincent and all the attorneys/agents associated with Customer Number 58166 have been withdrawn.

Applicant is reminded that there are no attorneys/agents of record at this time.

There is an outstanding Office action mailed on March 23, 2010 that requires a reply from applicant.

All future communications from the Office will be directed to the address listed below until otherwise properly notified by the applicant.

Telephone inquiries concerning this decision should be directed to the undersigned at (571) 272-3226.

Andrea Smith
Petitions Examiner
Office of Petitions

cc: Versatel Networks, Inc.
80 Rue Jean-Proulx
Gatineau J8Z 2Y4 **CANADA**

UNITED STATES PATENT AND TRADEMARK OFFICE

Commissioner for Patents
United States Patent and Trademark Office
P.O. Box 1450
Alexandria, VA 22313-1450
www.uspto.gov

APPLICATION NUMBER	FILING/RECEIPT DATE	FIRST NAMED APPLICANT	ATTORNEY DOCKET NUMBER
11/072,275	03/07/2005	Duck-kyun Kim	104-1016

STANZIONE & KIM, LLP
919 18TH STREET, N.W.
SUITE 440
WASHINGTON DC 20006

DATE MAILED: August 23, 2007

DECISION GRANTING PETITION UNDER 37 CFR 1.138(d)
The declaration of express abandonment is recognized

This is in response to the petition under 37 CFR 1.138(d) filed August 7, 2007, requesting for a refund of any previously paid search fee and excess claims fee in the above-identified application.

The petition is granted.

The express abandonment is recognized. Any previously paid search fee and excess claims fee are hereby refunded.

Any inquiries concerning this decision should be directed to the Pre-Grant Publication Division at (703) 605-4283.

Barbara J. Debnam
Pre-Grant Publication Division

UNITED STATES PATENT AND TRADEMARK OFFICE

Commissioner for Patents
United States Patent and Trademark Office
P.O. Box 1450
Alexandria, VA 22313-1450
www.uspto.gov

VERNON R. YANCY
Law Offices of Park & Associates
Suite 1722
3600 Wilshire Blvd.
Los Angeles CA 90010

COPY MAILED

APR 2 5 2006

OFFICE OF PETITIONS

In re Application of
BAEK, SANG HYUNE et al
Application No. 11/072,296
Filed: March 4, 2005
Attorney Docket No. 1802.23

DECISION ON PETITION
TO WITHDRAW
FROM RECORD

This is a decision on the Request to Withdraw as attorney or agent of record under 37 C.F.R. § 1.36(b), filed June 28, 2005.

The request is **NOT APPROVED** as moot.

A review of the file record indicates that the power of attorney to Vernon R. Yancy #52,379 has been revoked by the applicant of the patent application on March 7, 2006. Accordingly, the request to withdraw under 37 C.F.R. § 1.136(b) is moot.

All future communications from the Office will be directed to the below-listed address until otherwise notified by applicant.

Telephone inquires concerning this decision should be directed to Amelia Au at 571-272-7414.

There is an outstanding Office action mailed March 16, 2006 that requires a reply from the applicant.

Amelia Au
Petitions Examiner
Office of Petitions

cc: PARK LAW FIRM
3255 WILSHIRE BLVD
SUITE 1110
LOS ANGELES, CA 90010

UNITED STATES PATENT AND TRADEMARK OFFICE

Commissioner for Patents
United States Patent and Trademark Office
P.O. Box 1450
Alexandria, VA 22313-1450
www.uspto.gov

BIRCH STEWART KOLASCH & BIRCH
PO BOX 747
FALLS CHURCH VA 22040-0747

MAILED

FEB 23 2009

OFFICE OF PETITIONS

In re Application of	:	
Ito et al.	:	
Application No. 11/072,315	:	DECISION ON PETITION
Filed: March 7, 2005	:	
Attorney Docket No. 1982-0222PUS1	:	

This is a decision on the petition under the unintentional provisions of 37 CFR 1.137(b), filed January 22, 2009, to revive the above-identified application.

The petition is **GRANTED**.

This application became abandoned for failure to timely pay the issue and publication fees on or before January 16, 2009, as required by the Notice of Allowance and Fee(s) Due, mailed October 16, 2008. Accordingly, the date of abandonment of this application is January 17, 2008.

The petition satisfies the requirements of 37 CFR 1.137(b) in that petitioner has supplied (1) the reply in the form of payment of the issue fee of $1510 and the publication fee of $300, (2) the petition fee of $1620; and (3) a proper statement of unintentional delay.

Telephone inquiries concerning this decision should be directed to the undersigned at (571) 272-3215.

This application is being referred to the Office of Data Management for processing into a patent.

Charlema Grant
Petitions Attorney
Office of Petitions

UNITED STATES PATENT AND TRADEMARK OFFICE

Commissioner for Patents
United States Patent and Trademark Office
P.O. Box 1450
Alexandria, VA 22313-1450
www.uspto.gov

Merek, Blackmon & Voorhees, LLC
673 S. Washington St.
Alexandria, VA 22314

COPY MAILED

JUN 28 2005

OFFICE OF PETITIONS

In re Application of	:
Gaudreault et al.	: DECISION ON PETITION
Application No. 11/072,334	:
Filed: March 7, 2005	:
Attorney Docket No. PA-153/DIV1	:

This is a decision on the petition filed May 26, 2005, requesting that the above-identified application be accorded a filing date of March 7, 2005, with Figures 6 and 7 described in the specification as part of the original disclosure.

On March 7, 2005, applicants filed the above-identified application. On March 31, 2005, the Office mailed a Notice to File Corrected Application Papers, requiring replacement drawings in compliance with 37 CFR 1.84 and 37 CFR 1.121(d). Additionally, the Notice advised applicants that Figures 6 and 7 appeared to have been omitted on filing.

In response, on May 26, 2005, applicants submitted the present petition, a postcard receipt acknowledging receipt of 8 sheets of drawings on March 7, 2005, and the petition fee. Applicants stated they submitted a copy of the eight sheets of drawings with the petition; however, the Office did not receive any drawings on May 26, 2005.

As to the requirement for replacement drawings, as reiterated above, the Office did not receive any replacement drawings with the petition on May 26, 2005. The period for submitting replacement drawings in compliance with 37 CFR 1.84 and 37 CFR 1.121(d) continues to run from the mail date of March 31, 2005. To avoid abandonment of the application, applicants must submit replacement drawings with a request for an extension of time to respond.

As to the omitted Figures, the Office received seven sheets of drawings with the original application papers. Upon review of the record, one sheet of drawings containing Figures 6 and 7, deposited on March 7, 2005, has not been located among the application papers. However, the evidence is convincing that the application papers deposited on March 7, 2005, included eight sheets of drawings, one sheet of which was subsequently misplaced in the United States Patent and Trademark Office.

Unfortunately, the present petition must be dismissed because applicants failed to submit a copy of the original drawing sheet containing Figures 6 and 7, as well as eight sheets of replacement drawings as required by the Notice.

The time for filing a renewed petition continues to run from the period set forth in the Notice of March 31, 2005. Extensions of time for responding to the Notice are available under the provisions of 37 CFR 1.136(a). Any renewed petition must include BOTH a copy of the original drawing sheet containing Figures 6 and 7, and eight sheets of replacement drawings.

Further correspondence with respect to this matter should be addressed as follows:

By mail: Mail Stop Petition
Commissioner for Patents
P.O. Box 1450
Alexandria, VA 22313-1450

By FAX: (703) 872-9306
Attn: Office of Petitions

By hand: Customer Service Window
Randolph Building
401 Dulany Street
Alexandria, VA 22314

Telephone inquiries concerning this matter may be directed to the undersigned at (571) 272-3211.

Christina Tartera Donnell

Christina Tartera Donnell
Senior Petitions Attorney
Office of Petitions

UNITED STATES PATENT AND TRADEMARK OFFICE

COMMISSIONER FOR PATENTS
UNITED STATES PATENT AND TRADEMARK OFFICE
P.O. BOX 1450
ALEXANDRIA, VA 22313-1450
www.uspto.gov

Merek, Blackmon & Voorhees, LLC
673 S. Washington St.
Alexandria, VA 22314

COPY MAILED
JUL 27 2005
OFFICE OF PETITIONS

In re Application of :
Gaudreault et al. :
Application No. 11/072,334 : ON PETITION
Filed: March 7, 2005 :
Attorney Docket No. PA-153/DIV1 :

This is a decision on the renewed petition filed June 30, 2005, requesting that the above-identified application be accorded a filing date of March 7, 2005, with Figures 6 and 7 described in the specification as part of the original disclosure.

On March 7, 2005, applicants filed the above-identified application. On March 31, 2005, the Office mailed a Notice to File Corrected Application Papers, requiring replacement drawings in compliance with 37 CFR 1.84 and 37 CFR 1.121(d). Additionally, the Notice advised applicants that Figures 6 and 7 appeared to have been omitted on filing.

On May 26, 2005, applicants submitted a petition, a postcard receipt acknowledging receipt of 8 sheets of drawings on March 7, 2005, and the petition fee. The petition was dismissed by the decision of June 28, 2005, because it appeared that the applicants failed to submit a copy of the original drawing sheets containing Figures 6 and 7, as well as eight sheets of replacement drawings with the petition.

On June 30, 2005, applicants submitted the present renewed petition, duplicate copies of Figures 6 and 7, and eight sheets of replacement drawings. Additionally, applicants submitted a date-stamped postcard receipt showing that applicants filed eight sheets of drawings with the original petition on May 26, 2005.

Upon a review of the record, Figures 6 and 7, deposited on March 7, 2005, have not been located among the application papers. However, the evidence is convincing that the application papers deposited on March 7, 2005, included Figures 6 and 7, which were subsequently misplaced in the USPTO. Therefore, the application, including Figures 6 and 7, was complete on filing and will be granted a filing date of March 7, 2005.

Accordingly, the petition is granted.

The requirement for Figures 6 and 7 as set forth in the Notice of Omitted Item(s) was sent in error. Accordingly, the $400.00 petition fee will be credited to Deposit Account No. 50-0562.

The Office of Initial Patent Examination is directed **to accord the above-identified application a filing date of March 7, 2005,** using Figures 1-5 and 8 submitted on that date, and Figures 6 and 7 submitted on June 30, 2005, as part of the original disclosure.

Telephone inquiries concerning this matter may be directed to the undersigned at (571) 272-3211.

Christina Tartera Donnell

Christina Tartera Donnell
Senior Petitions Attorney
Office of Petitions

UNITED STATES PATENT AND TRADEMARK OFFICE

UNITED STATES DEPARTMENT OF COMMERCE
United States Patent and Trademark Office
Address: COMMISSIONER FOR PATENTS
P.O. Box 1450
Alexandria, Virginia 22313-1450
www.uspto.gov

TROP, PRUNER & HU, P.C.
1616 S. VOSS RD., SUITE 750
HOUSTON, TX 77057-2631

Mail Date: 04/21/2010

Applicant	: Asaf Golan	: DECISION ON REQUEST FOR
Patent Number	: 7577291	: RECALCULATION of PATENT
Issue Date	: 08/18/2009	: TERM ADJUSTMENT IN VIEW
Appliction No	: 11/072,338	: OF WYETH AND NOTICE OF INTENT TO
Filed	: 03/07/2005	: ISSUE CERTIFICATE OF CORRECTION
		:

The Request for Recalculation is **GRANTED** to the extent indicated.

The patent term adjustment has been determined to be **1198** days. The USPTO will *sua sponte* issue a certificate of correction reflecting the amount of PTA days determined by the recalculation.

Prior to the issuance of the certificate of correction, the USPTO will afford patentee an opportunity to be heard and request reconsideration. Accordingly, patentee has **one month or thirty (30) days**, whichever is longer, to file a request for reconsideration of this patent term adjustment calculation. See 35 U.S.C. 154(b)(3)(B)(ii) and 37 CFR 1.322(a)(4). No extensions of time will be granted under 37 CFR 1.136.

Patentee should use document code PET.OP if electronically filing a request for reconsideration of this patent term adjustment calculation. The patentee must also include the information required by 37 CFR 1.705(b)(2) and the fee required by 37 CFR 1.18(e). If patentee does not file a timely request for reconsideration of this patent term adjustment calculation including the information required by 37 CFR 1.705(b)(2) and the fee required by 37 CFR 1.18(e), the USPTO will issue a certificate of correction reflecting the PTA determination noted above.

Patentee should be aware that in order to preserve the right to review in the United States District Court for the District of Columbia of the USPTO patent term adjustment determination, patentee must ensure that he or she also take the steps required under 35 U.S.C. 154(b)(4)(A) in a timely manner. Nothing in the request for recalculation should be construed as providing an alternative time frame for commencing a civil action under 35 U.S.C. 154(b)(4)(A).

Any questions concerning this decision should be directed to the Office of Patent Legal Administration at 571-272-7702.

UNITED STATES PATENT AND TRADEMARK OFFICE

Commissioner for Patents
United States Patent and Trademark Office
P.O. Box 1450
Alexandria, VA 22313-1450
www.uspto.gov

ROBERTS ABOKHAIR & MARDULA
11800 SUNRISE VALLEY DRIVE, SUITE 1000
RESTON, VA 20191

COPY MAILED

DEC 29 2005

OFFICE OF PETITIONS

In re Application of
Brian A. Rosenfeld et al
Application No. 11/072,359
Filed: March 4, 2005
Attorney Docket No. 2483-004

: DECISION ON PETITIONS
: UNDER 37 CFR 1.78(a)(3) AND
: UNDER 37 CFR 1.78(a)(6)
:

This is a decision on the petition, filed November 3, 2005, which is being treated as a petition under both 37 CFR 1.78(a)(3) and 37 CFR 1.78(a)(6) to accept an unintentionally delayed claim under 35 U.S.C. §§120 and 119(e) for the benefit of the prior-filed applications set forth in the concurrently filed amendment.

The petition is **Granted**.

The present nonprovisional application was filed after November 29, 2000, and the claim herein for the benefit of priority to the prior-filed nonprovisional applications is submitted after expiration of the period specified in 37 CFR 1.78(a)(2)(ii) and 1.78(a)(5)(ii). Therefore, this is a proper petition under 37 CFR 1.78(a)(3) and 1.78(a)(6).

A petition for acceptance of a claim for late priority under 37 CFR §§ 1.78(a)(3) and 1.78(a)(6) is only applicable to those applications filed on or after November 29, 2000. Further, the petition is appropriate only after the expiration of the period specified in 37 CFR §§ 1.78(a)(2)(ii) and 1.78(a)(5)(ii). In addition, the petition under 37 CFR §§ 1.78(a)(3) and 1.78(a)(6) must be accompanied by:

(1) the reference required by 35 U.S.C. §§ 120 and 119(e) and 37 CFR §§ 1.78(a)(2)(i) and 1.78(a)(5)(i) of the prior-filed application, unless previously submitted;
(2) the surcharge set forth in § 1.17(t); and
(3) a statement that the entire delay between the date the claim was due under 37 CFR §§ 1.78(a)(2)(ii) and 1.78(a)(5)(ii) and the date the claim was filed was unintentional. The Commissioner may require additional where there is a question whether the delay was unintentional.

The petition complies with the requirements for a grantable petition under 37 CFR §§1.78(a)(3) and 1.78(a)(6) in that (1) a reference to the prior-filed applications has been included in an amendment to the first sentence of the specification following the title, as provided by 37 CFR §§

1.78(a)(2)(iii) and 1.78(a)(5)(iii); (2) the surcharge fee required by 37 CFR 1.17(t) has been submitted; and (3) the petition contains an adequate statement of unintentional delay.[1] Accordingly, having found that the petition for acceptance of an unintentionally delayed claim for the benefit of priority under 35 U.S.C. §§ 120 and 119(e) to the prior-filed applications satisfies the conditions of 37 CFR §§ 1.78(a)(3) and 1.78(a)(6), the petition is granted.

The granting of the petition to accept the delayed benefit claim to the prior-filed applications under 37 CFR §§ 1.78(a)(3) and 1.78(a)(6) should <u>not</u> be construed as meaning that this application is entitled to the benefit of the filing date of the prior-filed applications. In order for this application to be entitled to the benefit of the prior-filed applications, all other requirements under 35 U.S.C. §§120 and 365(c) and 1.78(a)(1) and (a)(2) and under 35 U.S.C. §119(e) and 37 CFR 1.78(a)(4) and (a)(5) must be met. Similarly, the fact that the corrected Filing Receipt accompanying this decision on petition includes the prior-filed applications should <u>not</u> be construed as meaning that applicant is entitled to the claim for benefit of priority to the prior-filed applications noted thereon. Accordingly, the examiner will, in due course, consider this benefit claim and determine whether this application is entitled to the benefit of the earlier filing date.

A corrected Filing Receipt, which includes the priority claim to the prior-filed applications, accompanies this decision on petition.

Any questions concerning this matter may be directed to the undersigned at (571) 272-3218. All other inquiries concerning either the examination procedures or status of the application should be directed to the Technology Center.

This matter is being referred to Technology Center Art Unit 3736 for examination in due course and for consideration of applicant's entitlement to claim benefit of the prior-filed applications.

Frances Hicks

Frances Hicks
Petitions Examiner
Office of Petitions

ATTACHMENT : Corrected Filing Receipt

C:\documents and settings\fhicks\my documents\470\072359 12-28-05

---

[1] 37 CFR 1.78(a)(3) and 1.78(a)(6) require a statement that the entire delay between the date the claim was due under 37 CFR 1.78(a)(2)(ii) and 1.78(a)(5)(ii) and the date the claim was filed was unintentional. Since the statement in the petition varies from the required language, the statement will be construed as the statement required by 37 CFR 1.78(a)(3) and 1.78(a)(6). Petitioner must notify the Office if this is not a correct reading of the statement appearing in the petition.

UNITED STATES PATENT AND TRADEMARK OFFICE

Commissioner for Patents
United States Patent and Trademark Office
P.O. Box 1450
Alexandria, VA 22313-1450
www.uspto.gov

COPY MAILED

SEP 1 0 2009

OFFICE OF PETITIONS

THE MARBURY LAW GROUP, PLLC
11800 SUNRISE VALLEY DRIVE
SUITE 1000
RESTON, VA 20191

In re Application of :
Brian A. Rosenfeld, et al. :
Application No. 11/072,359 : ON PETITION
Filed: March 4, 2005 :
Attorney Docket No. 2483-004 :

This is a decision in response to the petition, filed June 29, 2009, to revive the above-identified application under the provisions of 37 CFR 1.137(b).

The petition is **GRANTED**.

The application became abandoned for failure to reply in a timely manner to the non-final Office action mailed December 16, 2008, which set a shortened statutory period for reply of three (3) months. No extension of time under the provisions of 37 CFR 1.136(a) was obtained. Accordingly, the application became abandoned on March 17, 2009. This decision precedes the mailing of a Notice of Abandonment. On June 29, 2009, the present petition was filed.

The petition satisfies the conditions for revival pursuant to the provisions of 37 CFR 1.137(b) in that petitioner has supplied (1) a proposed reply in the form of an amendment; (2) the petition fee of $1,620; and (3) an adequate statement of unintentional delay.

The application is being referred to Technology Center AU 3686 for appropriate action by the Examiner in the normal course of business on the response filed June 29, 2009.

Telephone inquiries concerning this decision should be directed to the undersigned at (571) 272-3204. Inquiries relating to further prosecution should be directed to the Technology Center.

Sherry D. Brinkley
Petitions Examiner
Office of Petitions

UNITED STATES PATENT AND TRADEMARK OFFICE

UNITED STATES DEPARTMENT OF COMMERCE
United States Patent and Trademark Office
Address: COMMISSIONER FOR PATENTS
P.O. Box 1450
Alexandria, Virginia 22313-1450
www.uspto.gov

CHRISTENSEN, O'CONNOR, JOHNSON, KINDNESS, PLLC
1420 FIFTH AVENUE
SUITE 2800
SEATTLE, WA 98101-2347

Mail Date: 04/20/2010

Applicant	: Robert K. Bryll	: DECISION ON REQUEST FOR
Patent Number	: 7668388	: RECALCULATION of PATENT
Issue Date	: 02/23/2010	: TERM ADJUSTMENT IN VIEW
Appliction No	: 11/072,360	: OF WYETH AND NOTICE OF INTENT TO
Filed	: 03/03/2005	: ISSUE CERTIFICATE OF CORRECTION
		:

The Request for Recalculation is **GRANTED** to the extent indicated.

The patent term adjustment has been determined to be **1329** days. The USPTO will *sua sponte* issue a certificate of correction reflecting the amount of PTA days determined by the recalculation.

Prior to the issuance of the certificate of correction, the USPTO will afford patentee an opportunity to be heard and request reconsideration. Accordingly, patentee has **one month or thirty (30) days**, whichever is longer, to file a request for reconsideration of this patent term adjustment calculation. See 35 U.S.C. 154(b)(3)(B)(ii) and 37 CFR 1.322(a)(4). No extensions of time will be granted under 37 CFR 1.136.

Patentee should use document code PET.OP if electronically filing a request for reconsideration of this patent term adjustment calculation. The patentee must also include the information required by 37 CFR 1.705(b)(2) and the fee required by 37 CFR 1.18(e). If patentee does not file a timely request for reconsideration of this patent term adjustment calculation including the information required by 37 CFR 1.705(b)(2) and the fee required by 37 CFR 1.18(e), the USPTO will issue a certificate of correction reflecting the PTA determination noted above.

Patentee should be aware that in order to preserve the right to review in the United States District Court for the District of Columbia of the USPTO patent term adjustment determination, patentee must ensure that he or she also take the steps required under 35 U.S.C. 154(b)(4)(A) in a timely manner. Nothing in the request for recalculation should be construed as providing an alternative time frame for commencing a civil action under 35 U.S.C. 154(b)(4)(A).

Any questions concerning this decision should be directed to the Office of Patent Legal Administration at 571-272-7702.

UNITED STATES PATENT AND TRADEMARK OFFICE

Commissioner for Patents
United States Patent and Trademark Office
P.O. Box 1450
Alexandria, VA 22313-1450
www.uspto.gov

Nixon & Vanderhye, PC
901 North Glebe Road
11th Floor
Arlington, VA 22203

COPY MAILED

SEP 28 2006

OFFICE OF PETITIONS

In re Application of

Elizabeth Gomes Sanches et al.
Application No. 11/072,365
Filed: March 7, 2005
Attorney Docket No. 3673-31

DECISION ON PETITION
TO WITHDRAW
FROM RECORD

This is a decision on the Request to Withdraw as attorney or agent of record under 37 C.F.R. § 1.36(b), filed July 11, 2006.

The request is **NOT APPROVED**.

A grantable request to withdraw as attorney/agent of record must be signed by every attorney/agent seeking to withdraw or contain a clear indication that one attorney is signing on behalf of another/others. A request to withdraw will not be approved unless at least 30 (thirty) days would remain between the date of approval and the later of the expiration date of a time to file a response or the expiration date of the maximum time period which can be extended under 37 C.F.R. § 1.136(a).

The request cannot be approved because the attorneys and/or agents cannot be withdrawn using a Customer Number because the practitioners were not appointed by Customer Number.

All future communications from the Office will continue to be directed to the above-listed address until otherwise notified by applicant.

Telephone inquiries concerning this decision should be directed to Terri Williams at 571-272- 2991.

Amelia Au
Petitions Examiner
Office of Petitions

cc: **Katia F. de Almeida**
Bhering, Almeida & Associados
Rua Beneditinos, 16-110 andar
Rio de Janeiro 20081-050
RJ Brazil

UNITED STATES PATENT AND TRADEMARK OFFICE

Commissioner for Patents
United States Patent and Trademark Office
P.O. Box 1450
Alexandria, VA 22313-1450
www.uspto.gov

Nixon & Vanderhye, PC
901 North Glebe Road, 11th Floor
Arlington, VA 22203

COPY MAILED

JAN 08 2008

OFFICE OF PETITIONS

In re Application of	:	
Elizabeth Gomes Sanches et al.	:	DECISION ON PETITION
Application No.. 11/072,365	:	TO WITHDRAW
Filed: March 7, 2005	:	FROM RECORD
Attorney Docket No. 3673-31	:	

This is a decision on the renewed Request to Withdraw as attorney or agent of record under 37 C.F.R. § 1.36(b), filed July 23, 2007.

The request is **APPROVED**.

A grantable request to withdraw as attorney/agent of record must be signed by every attorney/agent seeking to withdraw or contain a clear indication that one attorney is signing on behalf of another/others. A request to withdraw will not be approved unless at least 30 (thirty) days would remain between the date of approval and the later of the expiration date of a time to file a response or the expiration date of the maximum time period which can be extended under 37 C.F.R. § 1.136(a).

The request was signed by B.J. Sadoff behalf of all attorneys of record. All attorneys/agents associated have been withdrawn. Applicant is reminded that there is no attorney of record at this time.

The address of record has been changed to the first named inventor.

The application became abandoned for failure to reply to the non-final Office action mailed June 22, 2007.

Telephone inquiries concerning this decision should be directed to Terri Williams at 571-272-2991.

T. Williams

Terri Williams
Petitions Examiner
Office of Petitions

cc: **Elizabeth Gomes Sanches**
Rua Alfredo Voloi 260, apto. 403 Recreio
Rio de Janeiro/RJ, 22785-090
Brazel

UNITED STATES PATENT AND TRADEMARK OFFICE

Commissioner for Patents
United States Patent and Trademark Office
P.O. Box 1450
Alexandria, VA 22313-1450
www.uspto.gov

MICHAEL P. MORRIS
BOEHRINGER INGELHEIM CORPORATION
900 RIDGEBURY ROAD
P. O. BOX 368
RIDGEFIELD, CT 06877-0368

COPY MAILED

JAN 0 5 2006

OFFICE OF PETITIONS

In re Application of	:	
Georg Boeck	:	
Application No. 11/072,375	:	ON PETITION
Filed: March 4, 2005	:	
Attorney Docket No. 1/1653	:	

This is a decision on the petition under 37 CFR 1.53, filed September 19, 2005, requesting that the above-identified application be accorded a filing date of March 4, 2005, including three (3) sheets of drawings.

The application was submitted on March 4, 2005. However, on May 18, 2005, the Office of Initial Patent Examination (OIPE) mailed a "Notice Of Incomplete Nonprovisional Application" (Notice) that stated the application had not been accorded a filing date, and that, among other items, the application was deposited without drawings.

In response, on September 19, 2005, the instant petition and a two (2) month extension of time were submitted. Petitioner argues that three (3) sheets of drawings were filed on March 4, 2005. In support, the instant petition is accompanied by a copy of applicants' postcard receipt that acknowledges receipt of "Drawings (3 sheets)" on March 4, 2005. A review of the application file indicates the presence of zero (0) sheets of drawings filed on March 4, 2005. It is assumed that missing sheets of drawings were misplaced by the Office.

In view of the above, the petition is granted and Notice is hereby withdrawn regarding the drawing requirement.

The $400.00 petition fee will be refunded to deposit account no. 02-2955.

This application will be returned to OIPE for further processing with a filing date of March 4, 2005, using the three (3) sheets of drawings, supplied on September 19, 2005.

Telephone inquiries regarding this decision should be directed to the undersigned at (571) 272-3228.

Edward J. Tannouse
Petitions Attorney
Office of Petitions
Office of the Deputy Commissioner
for Patent Examination Policy

UNITED STATES PATENT AND TRADEMARK OFFICE

UNITED STATES DEPARTMENT OF COMMERCE
United States Patent and Trademark Office
Address: COMMISSIONER FOR PATENTS
P.O. Box 1450
Alexandria, Virginia 22313-1450
www.uspto.gov

VENABLE LLP
P.O. BOX 34385
WASHINGTON, DC 20043-9998

Mail Date: 04/21/2010

Applicant	: Taketsugu Yao	: DECISION ON REQUEST FOR
Patent Number	: 7606271	: RECALCULATION of PATENT
Issue Date	: 10/20/2009	: TERM ADJUSTMENT IN VIEW
Appliction No	: 11/072,409	: OF WYETH AND NOTICE OF INTENT TO
Filed	: 03/07/2005	: ISSUE CERTIFICATE OF CORRECTION
		:

The Request for Recalculation is **GRANTED** to the extent indicated.

The patent term adjustment has been determined to be **769** days. The USPTO will *sua sponte* issue a certificate of correction reflecting the amount of PTA days determined by the recalculation.

Prior to the issuance of the certificate of correction, the USPTO will afford patentee an opportunity to be heard and request reconsideration. Accordingly, patentee has **one month or thirty (30) days**, whichever is longer, to file a request for reconsideration of this patent term adjustment calculation. See 35 U.S.C. 154(b)(3)(B)(ii) and 37 CFR 1.322(a)(4). No extensions of time will be granted under 37 CFR 1.136.

Patentee should use document code PET.OP if electronically filing a request for reconsideration of this patent term adjustment calculation. The patentee must also include the information required by 37 CFR 1.705(b)(2) and the fee required by 37 CFR 1.18(e). If patentee does not file a timely request for reconsideration of this patent term adjustment calculation including the information required by 37 CFR 1.705(b)(2) and the fee required by 37 CFR 1.18(e), the USPTO will issue a certificate of correction reflecting the PTA determination noted above.

Patentee should be aware that in order to preserve the right to review in the United States District Court for the District of Columbia of the USPTO patent term adjustment determination, patentee must ensure that he or she also take the steps required under 35 U.S.C. 154(b)(4)(A) in a timely manner. Nothing in the request for recalculation should be construed as providing an alternative time frame for commencing a civil action under 35 U.S.C. 154(b)(4)(A).

Any questions concerning this decision should be directed to the Office of Patent Legal Administration at 571-272-7702.

UNITED STATES PATENT AND TRADEMARK OFFICE

UNITED STATES DEPARTMENT OF COMMERCE
United States Patent and Trademark Office
Address: COMMISSIONER FOR PATENTS
P.O. Box 1450
Alexandria, Virginia 22313-1450
www.uspto.gov

STERNE, KESSLER, GOLDSTEIN & FOX P.L.L.C.
1100 NEW YORK AVENUE, N.W.
WASHINGTON, DC 20005

Mail Date: 04/21/2010

Applicant	: Evgeny Spektor	: DECISION ON REQUEST FOR
Patent Number	: 7612779	: RECALCULATION of PATENT
Issue Date	: 11/03/2009	: TERM ADJUSTMENT IN VIEW
Appliction No	: 11/072,419	: OF WYETH AND NOTICE OF INTENT TO
Filed	: 03/07/2005	: ISSUE CERTIFICATE OF CORRECTION
		:

The Request for Recalculation is **GRANTED** to the extent indicated.

The patent term adjustment has been determined to be **829** days. The USPTO will *sua sponte* issue a certificate of correction reflecting the amount of PTA days determined by the recalculation.

Prior to the issuance of the certificate of correction, the USPTO will afford patentee an opportunity to be heard and request reconsideration. Accordingly, patentee has **one month or thirty (30) days**, whichever is longer, to file a request for reconsideration of this patent term adjustment calculation. See 35 U.S.C. 154(b)(3)(B)(ii) and 37 CFR 1.322(a)(4). No extensions of time will be granted under 37 CFR 1.136.

Patentee should use document code PET.OP if electronically filing a request for reconsideration of this patent term adjustment calculation. The patentee must also include the information required by 37 CFR 1.705(b)(2) and the fee required by 37 CFR 1.18(e). If patentee does not file a timely request for reconsideration of this patent term adjustment calculation including the information required by 37 CFR 1.705(b)(2) and the fee required by 37 CFR 1.18(e), the USPTO will issue a certificate of correction reflecting the PTA determination noted above.

Patentee should be aware that in order to preserve the right to review in the United States District Court for the District of Columbia of the USPTO patent term adjustment determination, patentee must ensure that he or she also take the steps required under 35 U.S.C. 154(b)(4)(A) in a timely manner. Nothing in the request for recalculation should be construed as providing an alternative time frame for commencing a civil action under 35 U.S.C. 154(b)(4)(A).

Any questions concerning this decision should be directed to the Office of Patent Legal Administration at 571-272-7702.

UNITED STATES PATENT AND TRADEMARK OFFICE

UNITED STATES DEPARTMENT OF COMMERCE
United States Patent and Trademark Office
Address: COMMISSIONER FOR PATENTS
P.O. Box 1450
Alexandria, Virginia 22313-1450
www.uspto.gov

STERNE, KESSLER, GOLDSTEIN & FOX P.L.L.C.
1100 NEW YORK AVENUE, N.W.
WASHINGTON, DC 20005

Mail Date: 05/18/2010

Applicant : Evgeny Spektor
Patent Number : 7612779
Issue Date : 11/03/2009
Application No : 11/072,419
Filed : 03/07/2005

: NOTICE CONCERNING IMPROPER
: CALCULATION OF PATENT TERM
: ADJUSTMENT BASED UPON USPTO
: IMPROPERLY MEASURING REDUCTION
: PERIOD UNDER 37 CFR 1.704(c)(10).

The United States Patent and Trademark Office (USPTO) discovered that in processing the recent recalculation decisions mailed in response to patentee's filed Request for Recalculation of Patent Term Adjustment in view of Wyeth, the USPTO improperly measured the reduction period for reductions under 37 CFR 1.704(c)(10). Pursuant to 37 CFR 1.704(c)(10), patentee's reduction begins on the date of filing the amendment under 37 CFR 1.312 ("1.312 amendment") or other related paper and ends on the date that the Office mails a response to the filing of the 1.312 amendment or other paper. It has been discovered that during the recalculation, the calculation failed to the limit the reduction to the mail date of the response to the 1.312 amendment or other paper. Accordingly, patentee's reductions were greater than warranted.

This notice **VACATES** the previous GRANTED request for recalculation and provides patentee with a revised GRANTED recalculation.

The patent term adjustment has been determined to be **862** days. The USPTO will *sua sponte* issue a certificate of correction reflecting the amount of patent term adjustment (PTA) days determined by the recalculation.

Prior to the issuance of the certificate of correction, the USPTO will afford patentee an opportunity to be heard and request reconsideration. Accordingly, patentee has **one month or thirty (30) days** from the mail date of this notice, whichever is longer, to file a request for reconsideration of this PTA calculation. See 35 U.S.C. § 154(b)(3)(B)(ii) and 37 CFR 1.322(a)(4).

Patentee should use document code PET.OP if electronically filing a request for reconsideration of this PTA calculation. The patentee must also include the information required by 37 CFR 1.705(b)(2), and the fee required by 37 CFR 1.18(e). If patentee does not file a timely request for reconsideration of this PTA calculation, including the information required by 37 CFR 1.705(b)(2) and the fee required by 37 CFR 1.18(e), the USPTO will issue a certificate of correction reflecting the PTA determination noted above.

Patentee should be aware that in order to preserve the right of review of the USPTO's PTA determination in the United States District Court for the District of Columbia, patentee must ensure that the steps required under 35 U.S.C. § 154 (b)(4) are taken in a timely manner. Nothing in the request for recalculation should be construed as providing an alternative time frame for commencing a civil action under 35 U.S.C. § 154(b)(4).

UNITED STATES PATENT AND TRADEMARK OFFICE

Commissioner for Patents
United States Patent and Trademark Office
P.O. Box 1450
Alexandria, VA 22313-1450
www.uspto.gov

STAAS & HALSEY LLP
SUITE 700
1201 NEW YORK AVENUE, N.W.
WASHINGTON DC 20005

COPY MAILED
AUG 12 2008

In re Application of	:	
KOIKE et al.	:	
Application No. 11/072,437	:	DECISION ON PETITION
Filed: 03/07/2005	:	
Attorney Docket No. 1761.1074	:	

This is a decision on the petition under 37 CFR 1.181 (no fee), filed June 2, 2008, requesting withdrawal of the holding of abandonment in the above-identified application.

The petition is **GRANTED**.

This application was held abandoned for failure to timely respond to the Ex parte Quayle action of November 15, 2007, which set a shortened statutory period of two month or thirty days, whichever was longer, to reply. A reply was due on or before January 15, 2008, without any extensions of time for response.

Petitioner states that a reply was timely filed on January 8, 2008. To support this assertion, petitioner has submitted a copy of a date-stamped return receipt postcard, acknowledging receipt of an Amendment Fee Transmittal and an Amendment (5 pages) in the USPTO on January 8, 2008.

The reply, which the USPTO acknowledged as received on January 8, 2008, is not of record in the application file and has not been located to date. However, MPEP 503 states "[a] post card receipt which itemizes and properly identifies the papers which are being filed serves as *prima facie* evidence of receipt in the USPTO of all the items listed thereon on the date stamped thereon by the USPTO." Accordingly, it is concluded that the reply was timely received in the USPTO but lost after receipt thereof.

In view of the above, the holding of abandonment is hereby withdrawn and the application restored to pending status.

The Office will accept the copy of the reply supplied with the petition in place of the reply shown to have been received by the USPTO on January 8, 2008.

The Examiner has reviewed the reply and determined that it is an acceptable response to the outstanding action.

This application is being referred to Technology Center AU 2862 for appropriate action in the normal course of business on the reply received with petition.

Telephone inquires regarding this decision may be directed to the undersigned at (571) 272-3211.

Christina Tartera Donnell

Christina Tartera Donnell
Senior Petitions Attorney
Office of Petitions

UNITED STATES PATENT AND TRADEMARK OFFICE

UNITED STATES DEPARTMENT OF COMMERCE
United States Patent and Trademark Office
Address: COMMISSIONER FOR PATENTS
P.O. Box 1450
Alexandria, Virginia 22313-1450
www.uspto.gov

HARNESS, DICKEY & PIERCE, P.L.C.
P.O. BOX 8910
RESTON, VA 20195

Mail Date: 07/02/2010

Applicant	: David Abusch-Magder	: DECISION ON REQUEST FOR
Patent Number	: 7639988	: RECALCULATION of PATENT
Issue Date	: 12/29/2009	: TERM ADJUSTMENT IN VIEW
Application No	: 11/072,439	: OF WYETH AND NOTICE OF INTENT TO
Filed	: 03/07/2005	: ISSUE CERTIFICATE OF CORRECTION
		:

The Request for Recalculation is **GRANTED** to the extent indicated.

The patent term adjustment has been determined to be **490** days. The USPTO will *sua sponte* issue a certificate of correction reflecting the amount of PTA days determined by the recalculation.

Prior to the issuance of the certificate of correction, the USPTO will afford patentee an opportunity to be heard and request reconsideration. Accordingly, patentee has **one month or thirty (30) days**, whichever is longer, to file a request for reconsideration of this patent term adjustment calculation. See 35 U.S.C. 154(b)(3)(B)(ii) and 37 CFR 1.322(a)(4). No extensions of time will be granted under 37 CFR 1.136.

Patentee should use document code PET.OP if electronically filing a request for reconsideration of this patent term adjustment calculation. The patentee must also include the information required by 37 CFR 1.705(b)(2) and the fee required by 37 CFR 1.18(e). If patentee does not file a timely request for reconsideration of this patent term adjustment calculation including the information required by 37 CFR 1.705(b)(2) and the fee required by 37 CFR 1.18(e), the USPTO will issue a certificate of correction reflecting the PTA determination noted above.

Patentee should be aware that in order to preserve the right to review in the United States District Court for the District of Columbia of the USPTO patent term adjustment determination, patentee must ensure that he or she also take the steps required under 35 U.S.C. 154(b)(4)(A) in a timely manner. Nothing in the request for recalculation should be construed as providing an alternative time frame for commencing a civil action under 35 U.S.C. 154(b)(4)(A).

Any questions concerning this decision should be directed to the Office of Patent Legal Administration at 571-272-7702.

UNITED STATES PATENT AND TRADEMARK OFFICE

Commissioner for Patents
United States Patent and Trademark Office
P.O. Box 1450
Alexandria, VA 22313-1450
www.uspto.gov

Fish & Richardson PC
P.O. Box 1022
Minneapolis, MN 55440-1022

COPY MAILED

JAN 18 2007

OFFICE OF PETITIONS

In re Application of
Charles L. Richardson
Application No. 11/072,463
Filed: March 7, 2005
Attorney Docket No. 3649/1

DECISION ON PETITION
TO WITHDRAW
FROM RECORD

This is a decision on the Request to Withdraw as attorney or agent of record under 37 C.F.R. § 1.36(b), filed November 20, 2006.

The request is **NOT APPROVED** as moot.

A review of the file record indicates that the power of attorney to the attorneys and/or agents associated with Customer Number 26161 has been revoked by the applicant of the patent application on November 21, 2006. Accordingly, the request to withdraw under 37 C.F.R. § 1.36(b) is moot.

All future communications from the Office will continue to be directed to the below-listed address until otherwise notified by applicant.

Telephone inquires concerning this decision should be directed to Terri Williams at 571-272-2991.

Terri Williams
Petitions Examiner
Office of Petitions

cc: **Adams Evans P.A.**
301 South Tryon Street, Suite 2180
Two Wachovia Center
Charlotte, NC 28282-1991

UNITED STATES PATENT AND TRADEMARK OFFICE

UNITED STATES DEPARTMENT OF COMMERCE
United States Patent and Trademark Office
Address: COMMISSIONER FOR PATENTS
P.O. Box 1450
Alexandria, Virginia 22313-1450
www.uspto.gov

APPLICATION NUMBER	FILING OR 371 (c) DATE	FIRST NAMED APPLICANT	ATTY. DOCKET NO./TITLE
11/072,463	03/07/2005	Charles L. Richardson	3649/1

CONFIRMATION NO. 6753

OC000000022020472

OC000000022020472

23638
ADAMS EVANS P.A.
301 SOUTH TRYON STREET, SUITE 2180
TWO WACHOVIA CENTER
CHARLOTTE, NC 28282-1991

Date Mailed: 01/17/2007

NOTICE OF ACCEPTANCE OF POWER OF ATTORNEY

This is in response to the Power of Attorney filed 11/21/2006.

The Power of Attorney in this application is accepted. Correspondence in this application will be mailed to the above address as provided by 37 CFR 1.33.

Terri S. Williams

TERRI S WILLIAMS
OP (571) 272-2991

ATTORNEY/APPLICANT COPY

UNITED STATES PATENT AND TRADEMARK OFFICE

UNITED STATES DEPARTMENT OF COMMERCE
United States Patent and Trademark Office
Address: COMMISSIONER FOR PATENTS
P.O. Box 1450
Alexandria, Virginia 22313-1450
www.uspto.gov

APPLICATION NUMBER	FILING OR 371 (c) DATE	FIRST NAMED APPLICANT	ATTY. DOCKET NO./TITLE
11/072,463	03/07/2005	Charles L. Richardson	3649/1

CONFIRMATION NO. 6753

OC000000022020448

OC000000022020448

26161
FISH & RICHARDSON PC
P.O. BOX 1022
MINNEAPOLIS, MN 55440-1022

Date Mailed: 01/17/2007

NOTICE REGARDING CHANGE OF POWER OF ATTORNEY

This is in response to the Power of Attorney filed 11/21/2006.

- The Power of Attorney to you in this application has been revoked by the applicant. Future correspondence will be mailed to the new address of record(37 CFR 1.33).

T. Williams

TERRI S WILLIAMS
OP (571) 272-2991

NEW ATTORNEY/AGENT COPY

UNITED STATES PATENT AND TRADEMARK OFFICE

UNITED STATES DEPARTMENT OF COMMERCE
United States Patent and Trademark Office
Address: COMMISSIONER FOR PATENTS
P.O. Box 1450
Alexandria, Virginia 22313-1450
www.uspto.gov

APPLICATION NUMBER	FILING OR 371 (c) DATE	FIRST NAMED APPLICANT	ATTY. DOCKET NO./TITLE
11/072,463	03/07/2005	Charles L. Richardson	3649/1

CONFIRMATION NO. 6753

OC000000022020448

OC000000022020448

26161
FISH & RICHARDSON PC
P.O. BOX 1022
MINNEAPOLIS, MN 55440-1022

Date Mailed: 01/17/2007

NOTICE REGARDING CHANGE OF POWER OF ATTORNEY

This is in response to the Power of Attorney filed 11/21/2006.

- The Power of Attorney to you in this application has been revoked by the applicant. Future correspondence will be mailed to the new address of record(37 CFR 1.33).

Terri S. Williams

TERRI S WILLIAMS
OP (571) 272-2991

FORMER ATTORNEY/AGENT COPY

UNITED STATES PATENT AND TRADEMARK OFFICE

Commissioner for Patents
United States Patent and Trademark Office
P.O. Box 1450
Alexandria, VA 22313-1450
www.uspto.gov

Trego, Hines & Ladenheim, PLLC
9300 Harris Corners Parkway
Suite 210
Charlotte, NC 28269-3797

COPY MAILED

JUL 16 2008

In re Application of	:	
Charles L. Richardson	:	
Application No. 11/072,463	:	DECISION ON PETITION
Filed: March 7, 2005	:	TO WITHDRAW
Attorney Docket No. 1003/6US (151471.00000)	:	FROM RECORD
	:	

This is a decision on the Request to Withdraw as attorney or agent of record under 37 C.F.R. § 1.36(b), filed January 22, 2008.

The request is **NOT APPROVED** because it is moot.

A review of the file record indicates that the power of attorney to Trego, Hines & Ladenheim PLLC has been revoked by the assignee of the patent application on May 8, 2008. Accordingly, the request to withdraw under 37 C.F.R. § 1.36(b) is moot.

All future communications from the Office will continue to be directed to the below-listed address until otherwise notified by applicant.

Telephone inquires concerning this decision should be directed to Terri Williams at 571-272-2991.

Terri Williams
Petitions Examiner
Office of Petitions

cc: **Altera Law Group, PLLC**
220 S. 6th Street, Suite 1700
Minneapolis, MN 55402

UNITED STATES PATENT AND TRADEMARK OFFICE

Commissioner for Patents
United States Patent and Trademark Office
P.O. Box 1450
Alexandria, VA 22313-1450
www.uspto.gov

COPY MAILED

OCT 09 2009

OFFICE OF PETITIONS

Altera Law Group, LLC
220 S 6 Street, Suite 1700
Minneapolis, MN 55402

In re Application of	:	
Charles L. Richardson	:	
Application No. 11/072,463	:	DECISION ON PETITION
Filed: March 7, 2005	:	TO WITHDRAW
Attorney Docket No. 4385.72-US-01	:	FROM RECORD
	:	

This is a decision on the Request to Withdraw as attorney or agent of record under 37 C.F.R. § 1.36(b), filed September 21, 2009.

The request is **APPROVED**.

A grantable request to withdraw as attorney/agent of record must be signed by every attorney/agent seeking to withdraw or contain a clear indication that one attorney is signing on behalf of another/others. A request to withdraw will not be approved unless at least 30 (thirty) days would remain between the date of approval and the later of the expiration date of a time to file a response or the expiration date of the maximum time period which can be extended under 37 C.F.R. § 1.136(a).

The request was signed by Jeffrey R. Stone on behalf of all attorneys of record. All attorneys/agents have been withdrawn. Applicant is reminded that there is no attorney of record at this time.

The correspondence address of record has been changed and the new correspondence address is the address indicated below.

There is an outstanding Office action mailed June 16, 2009 that requires a reply from the applicant.

Telephone inquiries concerning this decision should be directed to Terri Johnson at 571-272-2991.

Terri Johnson
Petitions Examiner
Office of Petitions

cc: **LifeScience Solutions, LLC**
13950 Ballantyne Corporate Place
Suite 120
Charlotte, NC 28277

UNITED STATES PATENT AND TRADEMARK OFFICE

UNITED STATES DEPARTMENT OF COMMERCE
United States Patent and Trademark Office
Address: COMMISSIONER FOR PATENTS
P.O. Box 1450
Alexandria, Virginia 22313-1450
www.uspto.gov

APPLICATION NUMBER	FILING OR 371(C) DATE	FIRST NAMED APPLICANT	ATTY. DOCKET NO./TITLE
11/072,463	03/07/2005	Charles L. Richardson	4385.72-US-01

CONFIRMATION NO. 6753

POWER OF ATTORNEY NOTICE

22865
Altera Law Group, LLC
220 S 6 St Suite 1700
Minneapolis, MN 55402

OC000000038210023

Date Mailed: 10/09/2009

NOTICE REGARDING CHANGE OF POWER OF ATTORNEY

This is in response to the Power of Attorney filed 09/21/2009.

- The withdrawal as attorney in this application has been accepted. Future correspondence will be mailed to the new address of record. 37 CFR 1.33.

/tsjohnson/

Office of Data Management, Application Assistance Unit (571) 272-4000, or (571) 272-4200, or 1-888-786-0101

UNITED STATES PATENT AND TRADEMARK OFFICE

UNITED STATES DEPARTMENT OF COMMERCE
United States Patent and Trademark Office
Address: COMMISSIONER FOR PATENTS
P.O. Box 1450
Alexandria, Virginia 22313-1450
www.uspto.gov

MEDTRONIC
Attn: Noreen Johnson - IP Legal Department
2600 Sofamor Danek Drive
MEMPHIS, TN 38132

Mail Date: 04/21/2010

Applicant	: Lawrence M. Boyd	: DECISION ON REQUEST FOR
Patent Number	: 7621960	: RECALCULATION of PATENT
Issue Date	: 11/24/2009	: TERM ADJUSTMENT IN VIEW
Appliction No	: 11/072,466	: OF WYETH AND NOTICE OF INTENT TO
Filed	: 03/04/2005	: ISSUE CERTIFICATE OF CORRECTION
		:

The Request for Recalculation is **GRANTED** to the extent indicated.

The patent term adjustment has been determined to be **803** days. The USPTO will *sua sponte* issue a certificate of correction reflecting the amount of PTA days determined by the recalculation.

Prior to the issuance of the certificate of correction, the USPTO will afford patentee an opportunity to be heard and request reconsideration. Accordingly, patentee has **one month or thirty (30) days**, whichever is longer, to file a request for reconsideration of this patent term adjustment calculation. See 35 U.S.C. 154(b)(3)(B)(ii) and 37 CFR 1.322(a)(4). No extensions of time will be granted under 37 CFR 1.136.

Patentee should use document code PET.OP if electronically filing a request for reconsideration of this patent term adjustment calculation. The patentee must also include the information required by 37 CFR 1.705(b)(2) and the fee required by 37 CFR 1.18(e). If patentee does not file a timely request for reconsideration of this patent term adjustment calculation including the information required by 37 CFR 1.705(b)(2) and the fee required by 37 CFR 1.18(e), the USPTO will issue a certificate of correction reflecting the PTA determination noted above.

Patentee should be aware that in order to preserve the right to review in the United States District Court for the District of Columbia of the USPTO patent term adjustment determination, patentee must ensure that he or she also take the steps required under 35 U.S.C. 154(b)(4)(A) in a timely manner. Nothing in the request for recalculation should be construed as providing an alternative time frame for commencing a civil action under 35 U.S.C. 154(b)(4)(A).

Any questions concerning this decision should be directed to the Office of Patent Legal Administration at 571-272-7702.

UNITED STATES PATENT AND TRADEMARK OFFICE

UNITED STATES DEPARTMENT OF COMMERCE
United States Patent and Trademark Office
Address: COMMISSIONER FOR PATENTS
P.O. Box 1450
Alexandria, Virginia 22313-1450
www.uspto.gov

HONEYWELL/IFL
Patent Services
101 Columbia Road
P.O.Box 2245
Morristown, NJ 07962-2245

Mail Date: 04/20/2010

Applicant	: Jeffrey M. Hein	: DECISION ON REQUEST FOR
Patent Number	: 7600713	: RECALCULATION of PATENT
Issue Date	: 10/13/2009	: TERM ADJUSTMENT IN VIEW
Appliction No	: 11/072,467	: OF WYETH AND NOTICE OF INTENT TO
Filed	: 03/04/2005	: ISSUE CERTIFICATE OF CORRECTION
		:

The Request for Recalculation is **GRANTED** to the extent indicated.

The patent term adjustment has been determined to be **1016** days. The USPTO will *sua sponte* issue a certificate of correction reflecting the amount of PTA days determined by the recalculation.

Prior to the issuance of the certificate of correction, the USPTO will afford patentee an opportunity to be heard and request reconsideration. Accordingly, patentee has **one month or thirty (30) days**, whichever is longer, to file a request for reconsideration of this patent term adjustment calculation. See 35 U.S.C. 154(b)(3)(B)(ii) and 37 CFR 1.322(a)(4). No extensions of time will be granted under 37 CFR 1.136.

Patentee should use document code PET.OP if electronically filing a request for reconsideration of this patent term adjustment calculation. The patentee must also include the information required by 37 CFR 1.705(b)(2) and the fee required by 37 CFR 1.18(e). If patentee does not file a timely request for reconsideration of this patent term adjustment calculation including the information required by 37 CFR 1.705(b)(2) and the fee required by 37 CFR 1.18(e), the USPTO will issue a certificate of correction reflecting the PTA determination noted above.

Patentee should be aware that in order to preserve the right to review in the United States District Court for the District of Columbia of the USPTO patent term adjustment determination, patentee must ensure that he or she also take the steps required under 35 U.S.C. 154(b)(4)(A) in a timely manner. Nothing in the request for recalculation should be construed as providing an alternative time frame for commencing a civil action under 35 U.S.C. 154(b)(4)(A).

Any questions concerning this decision should be directed to the Office of Patent Legal Administration at 571-272-7702.

UNITED STATES PATENT AND TRADEMARK OFFICE

Commissioner for Patents
United States Patent and Trademark Office
P.O. Box 1450
Alexandria, VA 22313-1450
www.uspto.gov

LOCKE LIDDELL & SAPP
600 TRAVIS
3400 CHASE TOWER
HOUSTON, TX 77002-3095

COPY MAILED

FEB 28 2006

OFFICE OF PETITIONS

In re Application of	:	
Roy L. Edberg et al	:	
Application No. 11/072,469	:	ON PETITION
Filed: March 4, 2005	:	
Attorney Docket No. 019193-019US	:	

This is a decision on the petition under 37 CFR 1.137(b), filed December 27, 2005, to revive the above-identified application.

The petition is **GRANTED**.

The above-identified application became abandoned for failure to reply in a timely manner to the Notice to File Missing Parts of Nonprovisional Application (Notice) mailed March 28, 2005. The Notice set a period for reply of two (2) months from the mail date of the Notice. No extensions of time under the provisions of 37 CFR 1.136(a) were obtained. Accordingly, the above-identified application became abandoned on May 29, 2005.

The petition satisfies the conditions for revival pursuant to the provisions of 37 CFR 1.137(b) in that (1) the reply in the form of a declaration; (2) the petition fee; and (3) the required statement of unintentional delay have been received. Accordingly, the reply to the Notice of March 28, 2005 is accepted as having been unintentionally delay.

Telephone inquiries concerning this decision should be directed to Wan Laymon at (571) 272-3220.

This matter is being referred to the Office of Initial Patent Examination.

Wan Laymon
Wan Laymon
Petitions Examiner
Office of Petitions

UNITED STATES PATENT AND TRADEMARK OFFICE

Commissioner for Patents
United States Patent and Trademark Office
P.O. Box 1450
Alexandria, VA 22313-1450
www.uspto.gov

Banner & Witcoff, Ltd.
1100 13th Street, N.W.
Suite 1200
Washington, DC 20005-4051

COPY MAILED

JUN 05 2009

OFFICE OF PETITIONS

In re Application of	:	
Taimei Kodaira et al.	:	
Application No. 11/072,500	:	DECISION ON PETITION
Filed: March 7, 2005	:	TO WITHDRAW
Attorney Docket No. 006582.00011	:	FROM RECORD
	:	

This is a decision on the Request to Withdraw as attorney or agent of record under 37 C.F.R. § 1.36(b), filed December 23, 2005.

The request is **moot because a revocation of power of attorney has been filed**.

A review of the file record indicates that the power of attorney to Christopher R. Glembocki and all attorneys/agents of record has been revoked by the assignee of the patent application on April 17, 2006. Accordingly, the request to withdraw under 37 C.F.R. § 1.36(b) is moot.

All future communications from the Office will continue to be directed to the below-listed address until otherwise notified by applicant.

Telephone inquires concerning this decision should be directed to Kimberly Inabinet at 571-272-4618.

Kimberly Inabinet
Petitions Examiner
Office of Petitions

cc: OLIFF & BERRIDGE, PLC
P.O. BOX 320850
ALEXANDRIA VA 22320-4850

UNITED STATES PATENT AND TRADEMARK OFFICE

Commissioner for Patents
United States Patent and Trademark Office
P.O. Box 1450
Alexandria, VA 22313-1450
www.uspto.gov

RADER FISHMAN & GRAUER PLLC
LION BUILDING
1233 20TH STREET N.W., SUITE 501
WASHINGTON DC 20036

COPY MAILED

MAY 10 2007

OFFICE OF PETITIONS

In re Patent No. 7,0230,61	:	
Issue Date: 04/04/2006	:	
Application No. 11/072,505	:	ON PETITION
Filed: 03/07/2005	:	
Attorney Docket No. SON-2432/CON	:	

This is a decision on the petition filed April 18, 2007, which is being treated as a request under 37 CFR 3.81(b)[1] to correct the assignee information on the front page of the above-identified patent by way of a Certificate of Correction.

The request is **GRANTED**.

This matter is being referred to the Certificates of Correction Branch for issuance of the requested Certificate of Correction.

Telephone inquiries concerning this decision may be directed to the undersigned at (571) 272-3211. Inquiries regarding the issuance of a certificate of correction should be directed to the Certificate of Correction Branch at (571) 272-4200.

Christina Tartera Donnell

Christina Tartera Donnell
Senior Petitions Attorney
Office of Petitions

[1] *See* MPEP 1309, subsection II; and Official Gazette of June 22, 2004.

UNITED STATES PATENT AND TRADEMARK OFFICE

Commissioner for Patents
United States Patent and Trademark Office
P.O. Box 1450
Alexandria, VA 22313-1450
www.uspto.gov

WILLIAM DELAPLAINE GREEN
8906 CAMDEN ST
ALEXANDRIA VA 22308

MAILED

JUL 17 2009

OFFICE OF PETITIONS

In re Application of
William Delaplaine Green, Jr. :
Application No. 11/072,539 : DECISION ON
Filed: March 7, 2005 : PETITION
Title: Gas Turbine Engine :

This is in response to the petition to revive under 37 CFR 1.137(a), filed June 26, 2009.

The petition under 37 CFR 1.137(a) is **DISMISSED**.

Any request for reconsideration of this decision must be submitted within **TWO (2) MONTHS** from the mail date of this decision. The reconsideration request should include a cover letter entitled "Renewed Petition under 37 CFR 1.137(a)". Extensions of time under 37 CFR 1.136(a) are permitted.

The above-identified application became abandoned for failure to timely file a reply to the Notice of Non-Compliant Amendment mailed on September 25, 2008. This Notice set an extendable period for reply of one month. No reply having been received, the above-identified application became abandoned on October 26, 2008. The Office mailed a Notice of Abandonment on April 17, 2009.

A grantable petition under 37 CFR 1.137(a) must be accompanied by: (1) the required reply, unless previously filed; (2) the petition fee as set forth in 37 CFR 1.17(l); (3) a showing to the satisfaction of the Commissioner that the entire delay in filing the required reply from the due date for the reply until the filing of a grantable petition pursuant to 37 CFR 1.137(a) was unavoidable; and (4) any terminal disclaimer (and fee as set forth in 37 CFR 1.20(d)) required pursuant to 37 CFR 1.137(c).

The instant petition has not satisfied requirements (1) and (3) above.

With respect to item (1), petitioner has not submitted a reply to the Notice of Non-Compliant Amendment. A courtesy copy is enclosed for petitioner's convenience.

With respect to item (3), decisions on reviving abandoned applications on the basis of "unavoidable" delay have adopted the reasonably prudent person standard in determining if the delay was unavoidable:

> The word 'unavoidable' . . . is applicable to ordinary human affairs, and requires no more or greater care or diligence than is generally used and observed by prudent and careful men in relation to their most important business. It permits them in the exercise of this care to rely upon the ordinary and trustworthy agencies of mail and telegraph, worthy and reliable employees, and such other means and instrumentalities as are usually employed in such important business. If unexpectedly, or through the unforeseen fault or imperfection of these agencies and instrumentalities, there occurs a failure, it may properly be said to be unavoidable, all other conditions of promptness in its rectification being present.[1]

Moreover, a petition cannot be granted where a petitioner has failed to meet his or her burden of establishing that the delay was "unavoidable."[2]

Petitioner argues that he did not receive the Notice of Non-Compliant Amendment.

Where an application becomes abandoned as a consequence of a change of correspondence address (the Office action being mailed to the old, uncorrected address and failing to reach the applicant in sufficient time to permit a timely reply), petitioner must include an adequate showing that a **timely notification of the change of address was filed** in the

---

[1] In re Mattullath, 38 App. D.C. 497, 514-15 (1912)(quoting Ex parte Pratt, 1887 Dec. Comm'r Pat. 31, 32-33 (1887)); see also Winkler v. Ladd, 221 F. Supp. 550, 552, 138 USPQ 666, 167-68 (D.D.C. 1963), aff'd, 143 USPQ 172 (D.C. Cir. 1963); Ex parte Henrich, 1913 Dec. Comm'r Pat. 139, 141 (1913).

[2] Haines v. Quigg, 673 F. Supp. 314, 316-17, 5 USPQ2d 1130, 1131-32 (N.D. Ind. 1987).

application concerned, and in a manner reasonably calculated to call attention to the fact that it was a notification of change of address.[3]

Here, there has been no showing that petitioner timely notified the Office that he changed his address. As such, the Office properly mailed the Notice of Non-Compliant Amendment to the address of record.

While the showing of record is not sufficient to establish to the satisfaction of the Commissioner that the delay was unavoidable, petitioner is **not** precluded from obtaining relief by filing a request for reconsideration pursuant to 37 CFR 1.137(b) on the basis of unintentional delay. A grantable petition pursuant to 37 CFR 1.137(b) must be accompanied by (1) The reply required to the outstanding Office action or notice, unless previously filed; (2) The petition fee as set forth in 37 CFR 1.17(m), currently $810 for a small entity; (3) A statement that the entire delay in filing the required reply from the due date for the reply until the filing of a grantable petition pursuant to this paragraph was unintentional. The Commissioner may require additional information where there is a question whether the delay was unintentional; and (4) Any terminal disclaimer (and fee as set forth in 37 CFR 1.20(d)) required pursuant to paragraph (d) of this section.

A courtesy copy of this decision is being mailed to the address listed on the petition. However, the Office will mail all future correspondence to the above address of record, until such time as petitioner properly informs the Office to the contrary. A copy of Form PTO/SB/122 - Change of Correspondence Address - is enclosed for petitioner's convenience.

Further correspondence with respect to this matter should be addressed as follows:

By mail: Mail Stop Petitions
Commissioner for Patents
P.O. Box 1450
Alexandria VA 22313-1450

By FAX: (571)273-8300
Attn: Office of Petitions

---

[3] See MPEP 601.01; See also Ray. v. Lehman, 55 F.3d 606, 34 U.S.P.Q. 2d 1786 (CAFC 1995).

Telephone inquiries related to this decision should be directed to the undersigned at 571-272-3207.

Cliff Congo
Petitions Attorney
Office of Petitions

cc: William Delaplaine Green, Jr.
508 E.x 5th St
Bethlehem, PA 18015

Enc: PTO/SB/122 (1 page)
Privacy Act Statement (1 page)
Copy of Notice of Non-Compliant Amendment (3 pages)

UNITED STATES PATENT AND TRADEMARK OFFICE

UNITED STATES DEPARTMENT OF COMMERCE
United States Patent and Trademark Office
Address: COMMISSIONER FOR PATENTS
P.O. Box 1450
Alexandria, Virginia 22313-1450
www.uspto.gov

APPLICATION NO.	FILING DATE	FIRST NAMED INVENTOR	ATTORNEY DOCKET NO.	CONFIRMATION NO.
11/072,539	03/07/2005	William Delaplaine Green JR.		7670

7590 09/25/2008
WILLIAM DELAPLAINE GREEN
8906 CAMDEN ST.
ALEXANDRIA, VA 22308

EXAMINER
SUNG, GERALD LUTHER

ART UNIT	PAPER NUMBER
3746	

MAIL DATE	DELIVERY MODE
09/25/2008	PAPER

Please find below and/or attached an Office communication concerning this application or proceeding.

The time period for reply, if any, is set in the attached communication.

Notice of Non-Compliant Amendment (37 CFR 1.121)	Application No.	Applicant(s)	
	11/072,539	GREEN, WILLIAM DELAPLAINE	
	Examiner	Art Unit	
	GERALD L. SUNG	3746	

-- The MAILING DATE of this communication appears on the cover sheet with the correspondence address --

The amendment document filed on *07 June 2008* is considered non-compliant because it has failed to meet the requirements of 37 CFR 1.121 or 1.4. In order for the amendment document to be compliant, correction of the following item(s) is required.

THE FOLLOWING MARKED (X) ITEM(S) CAUSE THE AMENDMENT DOCUMENT TO BE NON-COMPLIANT:

☐ 1. Amendments to the specification:
- ☐ A. Amended paragraph(s) do not include markings.
- ☐ B. New paragraph(s) should not be underlined.
- ☐ C. Other _____.

☐ 2. Abstract:
- ☐ A. Not presented on a separate sheet. 37 CFR 1.72.
- ☐ B. Other _____.

☐ 3. Amendments to the drawings:
- ☐ A. The drawings are not properly identified in the top margin as "Replacement Sheet," "New Sheet," or "Annotated Sheet" as required by 37 CFR 1.121(d).
- ☐ B. The practice of submitting proposed drawing correction has been eliminated. Replacement drawings showing amended figures, without markings, in compliance with 37 CFR 1.84 are required.
- ☐ C. Other _____.

☐ 4. Amendments to the claims:
- ☐ A. A complete listing of all of the claims is not present.
- ☐ B. The listing of claims does not include the text of all pending claims (including withdrawn claims)
- ☐ C. Each claim has not been provided with the proper status identifier, and as such, the individual status of each claim cannot be identified. Note: the status of every claim must be indicated after its claim number by using one of the following status identifiers: (Original), (Currently amended), (Canceled), (Previously presented), (New), (Not entered), (Withdrawn) and (Withdrawn-currently amended).
- ☐ D. The claims of this amendment paper have not been presented in ascending numerical order.
- ☐ E. Other: _____.

☒ 5. Other (e.g., the amendment is unsigned or not signed in accordance with 37 CFR 1.4):
No arguments were presented addressing the outstanding rejection. The amendment adding a new clai will not be considered until arguments regarding the previously rejected claims have been presented.

For further explanation of the amendment format required by 37 CFR 1.121, see MPEP § 714.

TIME PERIODS FOR FILING A REPLY TO THIS NOTICE:

1. Applicant is given **no new time period** if the non-compliant amendment is an after-final amendment or an amendment filed after allowance. If applicant wishes to resubmit the non-compliant after-final amendment with corrections, the **entire corrected amendment** must be resubmitted.

2. Applicant is given **one month**, or thirty (30) days, whichever is longer, from the mail date of this notice to supply the correction, if the non-compliant amendment is one of the following: a preliminary amendment, a non-final amendment (including a submission for a request for continued examination (RCE) under 37 CFR 1.114), a supplemental amendment filed within a suspension period under 37 CFR 1.103(a) or (c), and an amendment filed in response to a *Quayle* action. If any of above boxes 1. to 4. are checked, the correction required is only the **corrected section** of the non-compliant amendment in compliance with 37 CFR 1.121.

   Extensions of time are available under 37 CFR 1.136(a) only if the non-compliant amendment is a non-final amendment or an amendment filed in response to a *Quayle* action.

   Failure to timely respond to this notice will result in:
   Abandonment of the application if the non-compliant amendment is a non-final amendment or an amendment filed in response to a *Quayle* action; or
   Non-entry of the amendment if the non-compliant amendment is a preliminary amendment or supplemental amendment.

	/Devon C Kramer/ Supervisory Patent Examiner, Art Unit 3746

Notice of Non-Compliant Amendment (37 CFR 1.121)

UNITED STATES PATENT AND TRADEMARK OFFICE

Commissioner for Patents
United States Patent and Trademark Office
P.O. Box 1450
Alexandria, VA 22313-1450
www.uspto.gov

COPY MAILED

JUL 3 1 2006

OFFICE OF PETITIONS

Law Offices of Park & Associates
Suite 1722
3600 Wilshire Blvd.
Los Angeles, CA 90010

In re Application of	:	
Cheong Soo Seo	:	
Application No. 11/072,557	:	DECISION ON PETITION
Filed: March 04, 2005	:	TO WITHDRAW
Attorney Docket No. 1802.21	:	FROM RECORD
	:	

This is a decision on the Request to Withdraw as attorney or agent of record under 37 C.F.R. § 1.36(b), filed June 28, 2005.

The request is **NOT APPROVED** as moot.

A review of the file record indicates that the power of attorney to Yancy R. Vernon on behalf of all attorneys/agents of record have been revoked by the applicant of the patent application on March 7, 2006. Accordingly, the request to withdraw under 37 C.F.R. § 1.36(b) is moot.

All future communications from the Office will continue to be directed to the below-listed address until otherwise notified by applicant.

There is an outstanding Office action mailed May 04, 2006 that requires a reply from the applicant.

Telephone inquiries concerning this decision should be directed to Charles Smoot at 571-272-3299.

for David Bucci
Petitions Examiner
Office of Petitions

cc: PARK LAW FIRM
3255 WILSHIRE BLVD
SUITE 1110
LOS ANGELES, CA 90010

UNITED STATES PATENT AND TRADEMARK OFFICE

UNITED STATES DEPARTMENT OF COMMERCE
United States Patent and Trademark Office
Address: COMMISSIONER FOR PATENTS
P.O. Box 1450
Alexandria, Virginia 22313-1450
www.uspto.gov

APPLICATION NUMBER	FILING OR 371 (c) DATE	FIRST NAMED APPLICANT	ATTY. DOCKET NO./TITLE
11/072,557	03/04/2005	Cheong Soo Seo	

CONFIRMATION NO. 7590

OC000000019762768

Law Offices of Park & Associates
Suite 1722
3600 wilshire Blvd.
Los Angeles, CA 90010

Date Mailed: 07/26/2006

NOTICE REGARDING CHANGE OF POWER OF ATTORNEY

This is in response to the Power of Attorney filed 03/07/2006.

- The Power of Attorney to you in this application has been revoked by the applicant. Future correspondence will be mailed to the new address of record(37 CFR 1.33).

CHARLES SMOOT
OP (571) 272-3299

FORMER ATTORNEY/AGENT COPY

UNITED STATES PATENT AND TRADEMARK OFFICE

Commissioner for Patents
United States Patent and Trademark Office
P.O. Box 1450
Alexandria, VA 22313-1450
www.uspto.gov

Haynes and Boone, LLP
901 Main Street, Suite 3100
Dallas, TX 75202

COPY MAILED

JUN 26 2007

OFFICE OF PETITIONS

In re Application of	:	
Robert Lance Cook et al.	:	
Application No. 11/072,578	:	DECISION ON PETITION
Filed: March 4, 2005	:	TO WITHDRAW
Attorney Docket No. 25791.354	:	FROM RECORD
	:	

This is a decision on the Request to Withdraw as attorney or agent of record under 37 C.F.R. § 1.36(b), filed April 23, 2007.

The request is **NOT APPROVED**.

A grantable request to withdraw as attorney/agent of record must be signed by every attorney/agent seeking to withdraw or contain a clear indication that one attorney is signing on behalf of another/others. A request to withdraw will not be approved unless at least 30 (thirty) days would remain between the date of approval and the later of the expiration date of a time to file a response or the expiration date of the maximum time period which can be extended under 37 C.F.R. § 1.136(a).

The request cannot be approved because no reasons for withdrawal have been provided. The Office cannot, at this time, determine whether practitioner's request is one of the mandatory or permissive reasons enumerated in 37 CFR 10.40. Any subsequent requests must include reasons for withdrawal. Please note that there is a space provided for on PTO/SB/83 (Request to Withdraw as Attorney or Agent) to supply practitioner's reasons.

It is futher noted that customer number 27683 was never given power of attorney in this application.

A courtesy copy of this decision is being mailed to the first signing inventor at the address noted in the Declaration for Patent Application, as well as to the address noted in the request.

All future communications from the Office will continue to be directed to the above-listed address until otherwise notified by applicant.

There are not outstanding office actions at this time.

Telephone inquiries concerning this decision should be directed to Kimberly Inabinet at 571-272- 4618.

Frances Hicks
Petitions Examiner
Office of Petitions

cc: Robert Lance Cook
934 Caswell Court
Katy, TX 77450

cc: King & Spalding
1100 Louisiana Street, Suite 4000
Houston, TX 77002

UNITED STATES PATENT AND TRADEMARK OFFICE

Commissioner for Patents
United States Patent and Trademark Office
P.O. Box 1450
Alexandria, VA 22313-1450
www.uspto.gov

B. TODD PATTERSON
MOSER, PATTERSON & SHERIDAN, L.L.P.
SUITE1500
3040 POST OAK BLVD
HOUSTON TX 77056-6582

COPY MAILED

JUN 28 2007

OFFICE OF PETITIONS

In re Application of	:	
ROELVINK, Petrus W. et al.	:	
Application No. 11/072,592	:	DECISION ON PETITION
Filed: March 04, 2005	:	TO WITHDRAW
Attorney Docket No. **BENI/0003**	:	FROM RECORD
	:	

This is a decision on the Request to Withdraw as attorney or agent of record under 37 C.F.R. § 1.36(b), filed June 12, 2006.

The request is **NOT APPROVED** as moot.

A review of the file record indicates that the power of attorney to MOSER, PATTERSON & SHERIDAN, L.L.P. has been revoked by the assignee of the patent application on June 15, 2006. Accordingly, the request to withdraw under 37 C.F.R. § 1.36(b) is moot.

All future communications from the Office will continue to be directed to the below-listed address until otherwise notified by applicant.

Telephone inquires concerning this decision should be directed to Tredelle Jackson at 571-272-2783.

Mónica A. Graves
Petitions Examiner
Office of Petitions

cc: **PATTON BOGGS LLP**
8484 WESTPARK DRIVE
SUITE 900
MCLEAN, VA 22102

UNITED STATES PATENT AND TRADEMARK OFFICE

UNITED STATES DEPARTMENT OF COMMERCE
United States Patent and Trademark Office
Address: COMMISSIONER FOR PATENTS
P.O. Box 1450
Alexandria, Virginia 22313-1450
www.uspto.gov

APPLICATION NO.	FILING DATE	FIRST NAMED INVENTOR	ATTORNEY DOCKET NO.	CONFIRMATION NO.
11/072,596	03/07/2005	Tomoyuki Asano	267277US6	9625

22850 7590 02/01/2008
OBLON, SPIVAK, MCCLELLAND MAIER & NEUSTADT, P.C.
1940 DUKE STREET
ALEXANDRIA, VA 22314

EXAMINER
MOISE, EMMANUEL LIONEL

ART UNIT	PAPER NUMBER
2137	

NOTIFICATION DATE	DELIVERY MODE
02/01/2008	ELECTRONIC

Please find below and/or attached an Office communication concerning this application or proceeding.

The time period for reply, if any, is set in the attached communication.

Notice of the Office communication was sent electronically on above-indicated "Notification Date" to the following e-mail address(es):

patentdocket@oblon.com
oblonpat@oblon.com
jgardner@oblon.com

UNITED STATES PATENT AND TRADEMARK OFFICE

UNITED STATES DEPARTMENT OF COMMERCE
United States Patent and Trademark Office
Address: COMMISSIONER FOR PATENTS
P.O. Box 1450
Alexandria, Virginia 22313-1450
www.uspto.gov

APPLICATION NO.	FILING DATE	FIRST NAMED INVENTOR	ATTORNEY DOCKET NO.	CONFIRMATION NO.
11/072,596	03/07/2005	Tomoyuki Asano	267277US6	9625

EXAMINER
MOISE, EMMANUEL LIONEL

ART UNIT	PAPER NUMBER
2137	

NOTIFICATION DATE	DELIVERY MODE
02/01/2008	ELECTRONIC

7590 02/01/2008
OBLON, SPIVAK, MCCLELLAND MAIER & NEUSTADT, P.C.
1940 DUKE STREET
ALEXANDRIA, VA 22314

DECISION GRANTING PETITION UNDER 37 CFR 1.138(d)

The declaration of express abandonment is recognized

This is in response to the petition under 37 CFR 1.138(d), requesting for a refund of any previously paid search fee and excess claims fee in the above-identified application.

The petition is granted.

The express abandonment is recognized. Any previously paid search fee and excess claims fee are hereby refunded.

Telephone inquiries should be directed to the Office of Data Management at (571) 272-4200.

Ricardo Clemons
Patent Publication Branch
Office of Data Management

Refund Ref: 0030049946
01/31/2008

Credit Card Refund Total: $2950.00

Am Exp..: XXXXXXXXXXX1009

FORM PET651G (Rev. 08/07)

Notice of Abandonment	Application No.	Applicant(s)	
	11/072,596	ASANO, TOMOYUKI	
	Examiner	Art Unit	
	Moise, Emmanuel	2137	

-- The MAILING DATE of this communication appears on the cover sheet with the correspondence address--

This application is abandoned in view of:

1. ☐ Applicant's failure to timely file a proper reply to the Office letter mailed on _____.
   (a) ☐ A reply was received on _____ (with a Certificate of Mailing or Transmission dated _____), which is after the expiration of the period for reply (including a total extension of time of _____ month(s)) which expired on _____.
   (b) ☐ A proposed reply was received on _____, but it does not constitute a proper reply under 37 CFR 1.113 (a) to the final rejection.
   (A proper reply under 37 CFR 1.113 to a final rejection consists only of: (1) a timely filed amendment which places the application in condition for allowance; (2) a timely filed Notice of Appeal (with appeal fee); or (3) a timely filed Request for Continued Examination (RCE) in compliance with 37 CFR 1.114).
   (c) ☐ A reply was received on _____ but it does not constitute a proper reply, or a bona fide attempt at a proper reply, to the non-final rejection. See 37 CFR 1.85(a) and 1.111. (See explanation in box 7 below).
   (d) ☐ No reply has been received.

2. ☐ Applicant's failure to timely pay the required issue fee and publication fee, if applicable, within the statutory period of three months from the mailing date of the Notice of Allowance (PTOL-85).
   (a) ☐ The issue fee and publication fee, if applicable, was received on _____ (with a Certificate of Mailing or Transmission dated _____), which is after the expiration of the statutory period for payment of the issue fee (and publication fee) set in the Notice of Allowance (PTOL-85).
   (b) ☐ The submitted fee of $_____ is insufficient. A balance of $_____ is due.
   The issue fee required by 37 CFR 1.18 is $_____. The publication fee, if required by 37 CFR 1.18(d), is $_____.
   (c) ☐ The issue fee and publication fee, if applicable, has not been received.

3. ☐ Applicant's failure to timely file corrected drawings as required by, and within the three-month period set in, the Notice of Allowability (PTO-37).
   (a) ☐ Proposed corrected drawings were received on _____ (with a Certificate of Mailing or Transmission dated _____), which is after the expiration of the period for reply.
   (b) ☐ No corrected drawings have been received.

4. ☑ The letter of express abandonment which is signed by the attorney or agent of record, the assignee of the entire interest, or all of the applicants.

5. ☐ The letter of express abandonment which is signed by an attorney or agent (acting in a representative capacity under 37 CFR 1.34(a)) upon the filing of a continuing application.

6. ☐ The decision by the Board of Patent Appeals and Interference rendered on _____ and because the period for seeking court review of the decision has expired and there are no allowed claims.

7. ☐ The reason(s) below:

/Rick Clemons/ ☐☐Administrative Assistant☐☐Art Unit: 3900

Petitions to revive under 37 CFR 1.137(a) or (b), or requests to withdraw the holding of abandonment under 37 CFR 1.181, should be promptly filed to minimize any negative effects on patent term.

UNITED STATES PATENT AND TRADEMARK OFFICE

Commissioner for Patents
United States Patent and Trademark Office
P.O. Box 1450
Alexandria, VA 22313-1450
www.uspto.gov

LAW OFFICES OF PARK & ASSOCIATES
SUITE 1722
3600 WILSHIRE BLVD.
LOS ANGELES, CA 90010

COPY MAILED

JUN 09 2006

OFFICE OF PETITIONS

In re Application of	:	
Jae Huek Noh et al	:	
Application No. 11/072,597	:	DECISION ON PETITION
Filed: March 4, 2005	:	TO WITHDRAW
Attorney Docket No. 1802.22	:	FROM RECORD

This is a decision on the Request to Withdraw as attorney or agent of record under 37 C.F.R. § 1.36(b), filed June 28, 2005.

The request is **NOT APPROVED** as moot.

A review of the file record indicates that the power of attorney to Vernon R. Yancy, has been revoked by the applicants of the patent application on March 7, 2006. Accordingly, the request to withdraw under 37 C.F.R. § 1.36(b) is moot.

All future communications from the Office will be directed to the below-listed address until otherwise notified by applicant/assignee or the current attorneys of record.

This application is being referred to Technology Center AU 2873 to await a reply to the Non-final Office action mailed April 4, 2006.

Telephone inquires concerning this decision should be directed to the undersigned at 571-272- 3208.

Karen Creasy

Karen Creasy
Petitions Examiner
Office of Petitions

Conferee:

cc:

PARK LAW FIRM
3255 WILSHIRE BLVD
SUITE 1110
LOS ANGELES, CA 90010

UNITED STATES PATENT AND TRADEMARK OFFICE

Commissioner for Patents
United States Patent and Trademark Office
P.O. Box 1450
Alexandria, VA 22313-1450
www.uspto.gov

BERESKIN AND PARR
40 KING STREET WEST
BOX 401
TORONTO ON M5H 3Y2 CA CANADA

COPY MAILED

APR 16 2008

In re Application of Raewyn Seaberg, et al. Application No. 11/072,630 Filed: March 7, 2005 Attorney Docket No. 16596-3	: : : : :	ON PETITION

This is a decision on the petition, filed December 20, 2007, to revive the above-identified application under 37 CFR 1.137(b).

The petition is GRANTED.

The two-month period for filing an appeal brief under 37 CFR 41.37 (accompanied by the fee required by 37 CFR 41.20(b)(2)), runs from the date of this decision.

This application became abandoned for failure to timely file a reply within the meaning of 37 CFR 1.113 to the final Office action of May 17, 2007. This decision precedes the mailing of a Notice of Abandonment. The proposed reply required for consideration of a petition to revive must be a Notice of Appeal (and appeal fee required by 37 CFR 41.20(b)(2)), an amendment that *prima facie* places the application in condition for allowance, a Request for Continued Examination (RCE) and submission (37 CFR 1.114), or the filing of a continuing application under 37 CFR 1.53(b). See MPEP 711.03(c)(II)(A)(2). On December 20, 2007 the present petition was filed.

The petition satisfies the requirements of 37 CFR 1.137(b) in that petitioner has supplied (1) the reply in the form of a Notice of Appeal and appeal fee of $255; (2) the petition fee of $770; and (3) an adequate statement of unintentional delay.

This application is being referred to Technology Center AU 1632 to await the filing of an appeal brief or for such other appropriate reply as may be submitted to continue prosecution of the application.

Telephone inquiries concerning this decision may be directed to the undersigned at (571) 272-3204. Inquiries relating to the prosecution of the application should be referred to the Technology Center.

Sherry D. Brinkley
Petitions Examiner
Office of Petitions

UNITED STATES PATENT AND TRADEMARK OFFICE

UNITED STATES DEPARTMENT OF COMMERCE
United States Patent and Trademark Office
Address: COMMISSIONER FOR PATENTS
P.O. Box 1450
Alexandria, Virginia 22313-1450
www.uspto.gov

KNOBBE MARTENS OLSON & BEAR LLP
2040 MAIN STREET
FOURTEENTH FLOOR
IRVINE, CA 92614

Mail Date: 04/20/2010

Applicant	: Alton O. Christensen SR.	: DECISION ON REQUEST FOR
Patent Number	: 7611393	: RECALCULATION of PATENT
Issue Date	: 11/03/2009	: TERM ADJUSTMENT IN VIEW
Appliction No	: 11/072,643	: OF WYETH AND NOTICE OF INTENT TO
Filed	: 03/07/2005	: ISSUE CERTIFICATE OF CORRECTION
		:

The Request for Recalculation is **GRANTED** to the extent indicated.

The patent term adjustment has been determined to be **1127** days. The USPTO will *sua sponte* issue a certificate of correction reflecting the amount of PTA days determined by the recalculation.

Prior to the issuance of the certificate of correction, the USPTO will afford patentee an opportunity to be heard and request reconsideration. Accordingly, patentee has **one month or thirty (30) days**, whichever is longer, to file a request for reconsideration of this patent term adjustment calculation. See 35 U.S.C. 154(b)(3)(B)(ii) and 37 CFR 1.322(a)(4). No extensions of time will be granted under 37 CFR 1.136.

Patentee should use document code PET.OP if electronically filing a request for reconsideration of this patent term adjustment calculation. The patentee must also include the information required by 37 CFR 1.705(b)(2) and the fee required by 37 CFR 1.18(e). If patentee does not file a timely request for reconsideration of this patent term adjustment calculation including the information required by 37 CFR 1.705(b)(2) and the fee required by 37 CFR 1.18(e), the USPTO will issue a certificate of correction reflecting the PTA determination noted above.

Patentee should be aware that in order to preserve the right to review in the United States District Court for the District of Columbia of the USPTO patent term adjustment determination, patentee must ensure that he or she also take the steps required under 35 U.S.C. 154(b)(4)(A) in a timely manner. Nothing in the request for recalculation should be construed as providing an alternative time frame for commencing a civil action under 35 U.S.C. 154(b)(4)(A).

Any questions concerning this decision should be directed to the Office of Patent Legal Administration at 571-272-7702.

UNITED STATES PATENT AND TRADEMARK OFFICE

Commissioner for Patents
United States Patent and Trademark Office
P.O. Box 1450
Alexandria, VA 22313-1450
www.uspto.gov

IRA S. DORMAN
330 ROBERTS STREET, SUITE 200
EAST HARTFORD, CT 06108

COPY MAILED

APR 11 2007

OFFICE OF PETITIONS

ON PETITION

In re Application of :
Steven W. Lewis et al :
Application No. 11/072,652 :
Filed: March 1, 2005 :
Attorney Docket No. DII-13 :

This is a decision on the petition filed November 13, 2006 under 37 CFR 1.137(b), to revive the above-identified application.

The petition is **GRANTED.**

The above-identified application became abandoned for failure to submit the Issue fee and Publication fee in a timely manner in reply to the Notice of Allowance mailed June 26, 2006, which set a statutory period for reply of three (3) months. Accordingly, the above-identified application became abandoned on September 27, 2006.

The petition satisfies the conditions for revival pursuant to the provisions of 37 CFR 1.137(b) in that (1) the reply in the form of payment of the Issue fee and Publication fee; (2) the petition fee; and (3) the required statement of unintentional delay have been received. Accordingly, the issue fee is accepted as having been unintentionally delayed.

Telephone inquiries concerning this decision should be directed to the undersigned at (571) 272-3210.

This matter is being referred to the Publishing Division for further processing.

Irvin Dingle
Petitions Examiner
Office of Petitions

UNITED STATES PATENT AND TRADEMARK OFFICE

UNITED STATES DEPARTMENT OF COMMERCE
United States Patent and Trademark Office
Address: COMMISSIONER FOR PATENTS
P.O. Box 1450
Alexandria, Virginia 22313-1450
www.uspto.gov

THE WEBB LAW FIRM, P.C.
700 KOPPERS BUILDING
436 SEVENTH AVENUE
PITTSBURGH, PA 15219

Mail Date: 04/28/2010

Applicant	: Shoso Ishimori	: DECISION ON REQUEST FOR
Patent Number	: 7661254	: RECALCULATION of PATENT
Issue Date	: 02/16/2010	: TERM ADJUSTMENT IN VIEW
Application No	: 11/072,654	: OF WYETH AND NOTICE OF INTENT TO
Filed	: 03/04/2005	: ISSUE CERTIFICATE OF CORRECTION
		:

The Request for Recalculation is **GRANTED** to the extent indicated.

The patent term adjustment has been determined to be **617** days. The USPTO will *sua sponte* issue a certificate of correction reflecting the amount of PTA days determined by the recalculation.

Prior to the issuance of the certificate of correction, the USPTO will afford patentee an opportunity to be heard and request reconsideration. Accordingly, patentee has **one month or thirty (30) days**, whichever is longer, to file a request for reconsideration of this patent term adjustment calculation. See 35 U.S.C. 154(b)(3)(B)(ii) and 37 CFR 1.322(a)(4). No extensions of time will be granted under 37 CFR 1.136.

Patentee should use document code PET.OP if electronically filing a request for reconsideration of this patent term adjustment calculation. The patentee must also include the information required by 37 CFR 1.705(b)(2) and the fee required by 37 CFR 1.18(e). If patentee does not file a timely request for reconsideration of this patent term adjustment calculation including the information required by 37 CFR 1.705(b)(2) and the fee required by 37 CFR 1.18(e), the USPTO will issue a certificate of correction reflecting the PTA determination noted above.

Patentee should be aware that in order to preserve the right to review in the United States District Court for the District of Columbia of the USPTO patent term adjustment determination, patentee must ensure that he or she also take the steps required under 35 U.S.C. 154(b)(4)(A) in a timely manner. Nothing in the request for recalculation should be construed as providing an alternative time frame for commencing a civil action under 35 U.S.C. 154(b)(4)(A).

Any questions concerning this decision should be directed to the Office of Patent Legal Administration at 571-272-7702.

SPE RESPONSE FOR CERTIFICATE OF CORRECTION

Paper No.: _____

DATE : June 10, 2008

TO SPE OF : ART UNIT 1656

SUBJECT : Request for Certificate of Correction for Appl. No 11/072673 patent no7354740

Please respond to this request for a certificate of correction within 7 days.

Please review the requested changes/corrections as shown in the **COCIN** document(s) in the IFW application image. No new matter should be introduced, nor should the scope or meaning of the claims be changed.

Please complete the response (see below) and forward the completed response to scanning using document code **COCX**

Magdalene Talley

Certificates of Correction Branch

703-308-9390 ext. 116

Thank You For Your Assistance

The request for issuing the above-identified correction(s) is hereby:

Note your decision on the appropriate box.

- ☒ **Approved** — **All** changes apply.
- ☐ **Approved in Part** — Specify below which changes **do not** apply.
- ☐ **Denied** — State the reasons for denial below.

Comments: _____

/Manjunath Rao/ — **SPE**

1656 — **Art Unit**

UNITED STATES PATENT AND TRADEMARK OFFICE

Commissioner for Patents
United States Patent and Trademark Office
P.O. Box 1450
Alexandria, VA 22313-1450
www.uspto.gov

COPY MAILED

MAR 14 2007

OFFICE OF PETITIONS

BEYER WEAVER LLP
P.O. BOX 70250
OAKLAND CA 94612-0250

In re Application of
Yamashita, et al.
Application No. 11/072,678
Filed: March 3, 2005
Attorney Docket No. YMUC P005

DECISION DISMISSING PETITION
UNDER 37 CFR 1.78(a)(3)

This is a decision on the petition under 37 CFR 1.78(a)(3), filed November 13, 2006, to accept an unintentionally delayed claim under 35 U.S.C. §§120 and 365(c) for the benefit of priority to prior-filed International Application No. PCT/JP2004/004930, filed April 5, 2004.

The petition is **DISMISSED**.

A petition for acceptance of a claim for late priority under 37 CFR 1.78(a)(3) is only applicable to those applications filed on or after November 29, 2000 and after the expiration of the period specified in 37 CFR 1.78(a)(2)(ii). In addition, the petition under 37 CFR 1.78(a)(3) must be accompanied by:

(1) the reference required by 35 U.S.C. §§ 120 and 365(c) and 37 CFR 1.78(a)(2)(i) of the prior-filed application, unless previously submitted;
(2) the surcharge set forth in § 1.17(t); and
(3) a statement that the entire delay between the date the claim was due under 37 CFR 1.78(a)(2)(ii) and the date the claim was filed was unintentional. The Director may require additional information where there is a question whether the delay was unintentional.

The reference to add the above-noted, prior-filed applications in the first sentence of the specification on page one following the title is not acceptable as drafted since it improperly incorporates by reference the prior-filed applications. An incorporation by reference statement added after an application's filing date is not effective because no new matter can be added to an application after its filing date (*see* 35 U.S.C. § 132(a)). If an incorporation by reference statement is included in an amendment to the specification to add a benefit claim under 35 U.S.C. § 120 after the filing date of the application, the amendment would not be proper. When a benefit claim under 35 U.S.C. § 120 is submitted after the filing of an application, the reference to the prior application cannot include an incorporation by reference statement of the prior

application. *See* Dart Industries v. Banner, 636 F.2d 684, 207 USPQ 273 (C.A.D.C. 1980). *Note* MPEP §§ 201.06(c) and 608.04(b).

If reconsideration of this decision is desired, a renewed petition under 37 CFR § 1.78(a)(3) and an Application Data Sheet or an amendment (complying with the provisions of 37 CFR 1.121 and 37 CFR 1.76(b)(5)) to correct the above matters are required.

Further, the amendment as drafted is unacceptable and, therefore, is not considered a proper reference under 37 CFR 1.78(a)(2)(i). In this regard, the amendment is physically part of the petition and, as such, does not comply with 37 CFR 1.121, 1.52, or 1.4(c). Note that 37 CFR 1.121 states that amendments are made by filing a paper, in compliance with § 1.52, directing that specified amendments be made. The pertinent section of 37 CFR 1.52 states that the claim (in this case, the claim for priority), must commence on a separate physical sheet. 37 CFR 1.4(c) states that each distinct subject must be contained in a separate paper since different matters may be considered by different branches of the United States Patent and Trademark Office.

Before the petition can be granted, petitioners must submit a substitute amendment in compliance with the aforementioned rules, along with a renewed petition under 37 CFR 1.78(a)(3).[1]

Further correspondence with respect to this matter should be addressed as follows:

By mail: Mail Stop PETITIONS
Commissioner for Patents
Post Office Box 1450
Alexandria, VA 22313-1450

By hand: Customer Service Window
Mail Stop Petitions
Randolph Building
401 Dulany Street
Alexandria, VA 22314

By fax: (571) 273-8300
ATTN: Office of Petitions

Any questions concerning this matter may be directed to Petitions Attorney Alesia M. Brown at (571) 272-3205.

Christina L. Donnell for

Frances Hicks
Lead Petitions Examiner
Office of Petitions

[1] The claim for priority may also be made in an Application Data Sheet in compliance with 37 CFR 1.121 and 37 CFR 1.76(b)(5).

UNITED STATES PATENT AND TRADEMARK OFFICE

COMMISSIONER FOR PATENTS
UNITED STATES PATENT AND TRADEMARK OFFICE
P.O. BOX 1450
ALEXANDRIA, VA 22313-1450
www.uspto.gov

BEYER WEAVER LLP
P.O. BOX 70250
OAKLAND CA 94612-0250

COPY MAILED

DEC 06 2007

OFFICE OF PETITIONS

In re Application of
Yamashita, et al.
Application No. 11/072,678
Filed: March 3, 2005
Attorney Docket No. YMUC P005

DECISION ON PETITION
UNDER 37 CFR 1.78(a)(3)

This is a decision on the renewed petition under 37 CFR 1.78(a)(3), filed April 27, 2007, to accept an unintentionally delayed claim under 35 U.S.C. § 120 for the benefit of priority to the prior-filed nonprovisional applications set forth in the amendment filed with the petition.

The petition is **GRANTED**.

A petition for acceptance of a claim for late priority under 37 CFR 1.78(a)(3) is only applicable to those applications filed on or after November 29, 2000. Further, the petition is appropriate only after the expiration of the period specified in 37 CFR 1.78(a)(2)(ii). In addition, the petition under 37 CFR 1.78(a)(3) must be accompanied by:

(1) the reference required by 35 U.S.C. § 120 and 37 CFR 1.78(a)(2)(i) of the prior-filed application, unless previously submitted;
(2) the surcharge set forth in § 1.17(t); and
(3) a statement that the entire delay between the date the claim was due under 37 CFR 1.78(a)(2)(ii) and the date the claim was filed was unintentional. The Director may require additional information where there is a question whether the delay was unintentional.

All of the above requirements having been satisfied, the late claim for priority under 35 U.S.C. § 120 is accepted as being unintentionally delayed.

The granting of the petition to accept the delayed benefit claim to the prior-filed applications under 37 CFR 1.78(a)(3) should not be construed as meaning that this application is entitled to the benefit of the prior-filed applications. In order for this application to be entitled to the benefit of the prior-filed applications, all other requirements under 35 U.S.C. § 120 and 37 CFR 1.78(a)(1) and (a)(2) must be met. Similarly, the fact that the corrected Filing Receipt accompanying this decision on petition includes the prior-filed applications should not be

construed as meaning that applicant is entitled to the claim for benefit of priority to the prior-filed applications noted thereon. Accordingly, the examiner will, in due course, consider this benefit claim and determine whether the application is entitled to the benefit of the earlier filing date.

A corrected Filing Receipt, which includes the priority claim to the prior-filed nonprovisional applications, accompanies this decision on petition.

Any inquiries concerning this decision may be directed to Petitions Attorney Alesia M. Brown at (571) 272-3205. All other inquiries concerning either the examination procedures or status of the application should be directed to the Technology Center.

This application is being forwarded to Technology Center Art Unit 1657 for consideration by the examiner of applicant's entitlement to claim benefit of priority under 35 U.S.C. § 120 to the prior-filed applications.

Anthony Knight
Supervisor
Office of Petitions

ATTACHMENT: Corrected Filing Receipt

UNITED STATES PATENT AND TRADEMARK OFFICE

COMMISSIONER FOR PATENTS
UNITED STATES PATENT AND TRADEMARK OFFICE
P.O. BOX 1450
ALEXANDRIA, VA 22313-1450
www.uspto.gov

Knobbe Martens Olson & Bear, LLP
2040 Main Street
Fourteenth Floor
Irvine, CA 92614

COPY MAILED

APR 0 8 2008

OFFICE OF PETITIONS

In re Application of	:	
Don Kain	:	
Application No. 11/072,688	:	ON PETITION
Filed: March 4, 2005	:	
Attorney Docket No. WDGD.001C1	:	

This is a decision on the petition under 37 CFR 1.137(b), filed June 26, 2007, to revive the above-identified application.

The application became abandoned for failure to respond to the Notice to File Missing Parts of Nonprovisional Application mailed on December 12, 2005. A Notice of Abandonment was mailed on August 15, 2006.

The Office acknowledges receipt of $1,080 for a five months extension of time. However, an extension of time under 37 CFR 1.136 must be filed prior to the expiration of the maximum extendable period for reply. See In re Application of S., 8 USPQ2d 1630, 1631 (Comm'r Pats. 1988). Accordingly, since the $1,080 extension of time fee was subsequent to the maximum extendable period for reply, this fee is unnecessary.

Since the Notice mailed on December 12, 2005 required petitioner to submit a $65 surcharge for the late filing of the filing fee, search fee and examination fee, that fee will be deducted from the unnecessary $1,080 extension of time fee. Therefore, the remaining balance of $1,015 will be credited back to petitioner's credit card.

The petition satisfies the requirements of 37 CFR 1.137(b), in that, petitioner has supplied (1) the reply in the form of $75 for the electronic filing fee, $250 for the search fee, $100 for the examination fee and the $65 surcharge; (2) the petition fee of $750; and (3) a proper statement of unintentional delay. Therefore, the petition is **GRANTED**.

This application file is being referred to the Office of Patent Application Processing for further processing.

Telephone inquiries concerning this decision should be directed to the undersigned at (571) 272-3226.

Andrea Smith
Petitions Examiner
Office of Petitions

UNITED STATES PATENT AND TRADEMARK OFFICE

COMMISSIONER FOR PATENTS
UNITED STATES PATENT AND TRADEMARK OFFICE
P.O. BOX 1450
ALEXANDRIA, VA 22313-1450
www.uspto.gov

WALTER W. DUFT
LAW OFFICES OF WALTER W. DUFT
8616 MAIN ST
SUITE 2
WILLIAMSVILLE, NY 14221

COPY MAILED
JUN 20 2008
OFFICE OF PETITIONS

In re Application of
Michael Hacikyan
Application No. 11/072,689
Filed: March 4, 2005
Attorney Docket No. 1605-3A

DECISION ON PETITION

This is a decision on the petition, filed October 27, 2007, which is being treated as a petition under 37 CFR 1.137(b) to revive the instant nonprovisional application for failure to timely notify the U.S. Patent and Trademark (USPTO) of the filing of an application in a foreign country, or under a multinational treaty that requires publication of applications eighteen months after filing. *See* 37 CFR 1.137(f).

The petition is **DISMISSED**.

The application was abandoned for failure to notify the Office of the subsequently filed foreign or international application filed on May 3, 2005. Office records show that a Request to Rescind was filed on October 27, 2007.

A grantable petition under 37 CFR 1.137(b) must be accompanied by: (1) the required reply, unless previously filed; (2) the petition fee as set forth in 37 CFR 1.17(m); (3) a statement that the entire delay in filing the required reply from the due date for the reply until the filing of a grantable petition pursuant to 37 CFR 1.137(b) was unintentional; and (4) any terminal disclaimer (and fee as set forth in 37 CFR 1.20(d)) required by 37 CFR 1.137(d). Where there is a question as to whether either the abandonment or the delay in filing a petition under 37 CFR 1.137 was unintentional, the Director may require additional information. *See* MPEP 711.03(c)(II)(C) and (D). The instant petition lacks item (3) above.

There are three periods to be considered during the evaluation of a petition under 37 CFR 1.137(b):

(1) the delay in reply that originally resulted in the abandonment;

(2) the delay in filing an initial petition pursuant to 37 CFR 1.137(b) to revive the application; and

(3) the delay in filing a grantable petition pursuant to 37 CFR 1.137(b) to revive the application.

Currently, the delay has not been shown to the satisfaction of the Director to be unintentional for periods (1) and (2).

As to Period (1):

The patent statute at 35 U.S.C. § 41(a)(7) authorizes the Director to revive an "unintentionally abandoned application." The legislative history of Public Law 97-247 reveals that the purpose of 35 U.S.C. § 41(a)(7) is to permit the Office to have more discretion than in 35 U.S.C. §§ 133 or 151 to revive abandoned applications in appropriate circumstances, but places a limit on this discretion, stating that "[u]nder this section a petition accompanied by either a fee of $500 or a fee of $50 **would not be granted where the abandonment** or the failure to pay the fee for issuing the patent **was intentional** as opposed to being unintentional or unavoidable." [emphasis added]. See H.R. Rep. No. 542, 97th Cong., 2d Sess. 6-7 (1982), *reprinted in* 1982 U.S.C.C.A.N. 770-71. The revival of an intentionally abandoned application is antithetical to the meaning and intent of the statute and regulation.

35 U.S.C. § 41(a)(7) authorizes the Director to accept a petition "for the revival of an unintentionally abandoned application for a patent." As amended December 1, 1997, 37 CFR 1.137(b)(3) provides that a petition under 37 CFR 1.137(b) must be accompanied by a statement that the delay was unintentional, but provides that "[t]he Commissioner may require additional information where there is a question whether the delay was unintentional." Where, as here, there is a question whether the initial delay was unintentional, the petitioner must meet the burden of establishing that the delay was unintentional within the meaning of 35 U.S.C. § 41(a)(7) and 37 CFR 1.137(b). *See* In re Application of G, 11 USPQ2d 1378, 1380 (Comm'r Pats. 1989); 37 CFR 1.137(b). Here, in view of the inordinate delay (over 2 years) in resuming prosecution, there is a question whether the entire delay was unintentional. Petitioner should note that the issue is not whether some of the delay was unintentional by any party; rather, the issue is whether the entire delay has been shown to the satisfaction of the Director to be unintentional.

The question under 37 CFR 1.137(b) for period (1) is whether the delay on the part of the party having the right or authority to reply to avoid abandonment (or not reply) was unintentional. Accordingly, any renewed petition must clearly identify the party having the right to reply to avoid abandonment. That party, in turn must explain what effort(s) was made to reply and why no reply was filed. If no effort was made to further reply, then that party must explain why the delay in this application does not result from a deliberate course of action (or inaction). Likewise, as petitioner, Walter W. Duft, was the counsel of record at the time of abandonment, he should explain why this application became abandoned while it was under his control and what efforts was made to further reply and with whom this matter was discussed outside of his Law Office. Copies of any correspondence relating to the filing, or not filing a reply are required from the responsible persons and whoever else was involved with this application at the time of abandonment. Statements are required from any and all persons at the Law Office of Walter W. Duft, and the responsible person(s) having firsthand knowledge of the circumstances surrounding the lack of a reply. As the courts have made clear, it is pointless for the USPTO to revive a long abandoned application without an adequate showing that the delay did not result from a deliberate course of action. *See* Lawman Armor v. Simon, 2005 U.S. Dist. LEXIS 10843, 74 USPQ2d 1633 (DC EMich 2005); Field Hybrids, LLC v. Toyota Motor Corp., 2005 U.S. Dist. LEXIS 1159 (D. Minn Jan. 27, 2005); Lumenyte Int'l Corp. v. Cable Lite Corp., Nos. 96-1011, 96-1077, 1996 U.S. App. LEXIS 16400, 1996 WL 383927 (Fed. Cir. July 9, 1996) (unpublished) (patents held unenforceable due to a finding of inequitable conduct in submitting an inappropriate statement that the abandonment was unintentional).

As to Period (2):

Likewise, where the applicant deliberately chooses not to seek or persist in seeking the revival of an abandoned application, or where the applicant deliberately chooses to delay seeking the revival of an abandoned application, the resulting delay in seeking revival of the abandoned application cannot be considered as "unintentional" within the meaning of 37 CFR 1.137(b). *See* MPEP 711.03(c).

The language of both 35 U.S.C. § 41(a)(7) and 37 CFR 1.137(b) are clear and unambiguous, and, furthermore, without qualification. That is, the delay in filing the reply during prosecution, as well as in filing the petition seeking revival, must have been, without qualification, "unintentional" for the reply to now be accepted on petition. The Office requires that the entire delay be at least unintentional as a prerequisite to revival of an abandoned application to prevent abuse and injury to the public. *See* H.R. Rep. No. 542, 97th Cong., 2d Sess. 7 (1982), reprinted in 1982 U.S.C.C.A.N. 771 ("[i]n order to prevent abuse and injury to the public the Commissioner . . . could require applicants to act promptly after becoming aware of the abandonment"). The December 1997 change to 37 CFR 1.137 did not create any new right to overcome an intentional delay in seeking revival, or in renewing an attempt at seeking revival, of an abandoned application. *See* Changes to Patent Practice and Procedure; Final Rule Notice, 62 Fed. Reg. 53131, 53160 (October 10, 1997), 1203 Off. Gaz. Pat. Office 63, 87 (October 21, 1997), which clearly stated that any protracted delay (here, over 2 years) could trigger, as here, a request for additional information. As the courts have since made clear, a protracted delay in seeking revival, as here, requires a petitioner's detailed explanation seeking to excuse the delay as opposed to USPTO acceptance of a general allegation of unintentional delay. *See* Lawman Armor v. Simon, 2005 U.S. Dist. LEXIS 10843, 74 USPQ2d 1633, at 1637-8 (DC EMich 2005); Field Hybrids, LLC v. Toyota Motor Corp., 2005 U.S. Dist. LEXIS 1159 (D. Minn Jan. 27, 2005) at *21-*23. Statements are required from any and all persons and the responsible person(s) having firsthand knowledge of the circumstances surrounding the protracted delay, after the abandonment date, in seeking revival.

As noted in MPEP 711.03(c)(II), subsection D, in instances in which such petition was not filed within 1 year of the date of abandonment of the application, applicants should include:

> (A) the date that the applicant first became aware of the abandonment of the application; and
>
> (B) a showing as to how the delay in discovering the abandoned status of the application occurred despite the exercise of due care or diligence on the part of the applicant.

In either instance, applicant's failure to carry the burden of proof to establish that the "entire" delay was "unavoidable" or "unintentional" may lead to the denial of a petition under 37 CFR 1.137(b), regardless of the circumstances that originally resulted in the abandonment of the application. *See also* New York University v. Autodesk, 2007 U.S. DIST LEXIS, U.S.District LEXIS 50832, *10 -*12 (S.D.N.Y. 2007)(protracted delay in seeking revival undercuts assertion of unintentional delay).

Any request for reconsideration of this decision must be submitted within **TWO (2) MONTHS** from the mail date of this decision. Extensions of time under 37 CFR 1.136(a) is permitted. The reconsideration request should include a cover letter entitled "Renewed Petition under 37 CFR 1.137(b)." This is **not** a final agency action within the meaning of 5 U.S.C. § 704. No additional petition fee is required.

Any renewed petition may be addressed as follows:

By mail: Mail Stop PETITION
Commissioner for Patents
P.O. Box 1450
Alexandria, VA 22313-1450

By hand: U.S. Patent and Trademark Office
Customer Service Window, Mail Stop Petitions
Randolph Building
401 Dulany Street
Alexandria, VA 22314

The centralized facsimile number is **(571) 273-8300.**

Telephone inquiries concerning this decision should be directed to the undersigned at (571) 272-3226.

Andrea Smith
Petitions Examiner
Office of Petitions

UNITED STATES PATENT AND TRADEMARK OFFICE

Commissioner for Patents
United States Patent and Trademark Office
P.O. Box 1450
Alexandria, VA 22313-1450
www.uspto.gov

WALTER W. DUFT
LAW OFFICES OF WALTER W. DUFT
8616 MAIN ST
SUITE 2
WILLIAMSVILLE, NY 14221

MAILED

NOV 13 2009

OFFICE OF PETITIONS

In re Application of	:	
Michael Hacikyan	:	
Application No. 11/072,689	:	DECISION ON PETITION
Filed: March 4, 2005	:	
Attorney Docket No. 1605-3A	:	

This is a decision on the renewed petition, filed June 25, 2008, which is being treated as a petition under 37 CFR 1.137(b) to revive the instant nonprovisional application for failure to timely notify the U.S. Patent and Trademark (USPTO) of the filing of an application in a foreign country, or under a multinational treaty that requires publication of applications eighteen months after filing. *See* 37 CFR 1.137(f). The delay in responding is sincerely regretted.

The petition is **GRANTED**.

Petitioner states that the instant nonprovisional application is the subject of an application filed in an eighteen-month publication country on May 3, 2005. However, the USPTO was unintentionally not notified of this filing within 45 days subsequent to the filing of the subject application in an eighteen-month publication country.

In view of the above, this application became abandoned pursuant to 35 U.S.C. § 122(b)(2)(B)(iii) and 37 CFR 1.213(c) for failure to timely notify the Office of the filing of an application in a foreign country or under a multilateral international agreement that requires publication of applications 18 months after filing.

A petition to revive an application abandoned pursuant to 35 U.S.C. 122(b)(2)(B)(iii) for failure to notify the USPTO of a foreign filing must be accompanied by:

(1) the required reply which is met by the notification of such filing in a foreign country or under a multinational treaty;
(2) the petition fee as set forth in 37 CFR 1.17(m); and

(3) a statement that the entire delay in filing the required reply from the due date of the reply until the filing of a grantable petition was unintentional.

The instant petition has been found to be in compliance with 37 CFR 1.137(b). Accordingly, the failure to timely notify the USPTO of a foreign or international filing within 45 days after the date of filing of such foreign or international application as provided by 35 U.S.C. § 122(b)(2)(B)(iii) and 37 CFR 1.213(c) is accepted as having been unintentionally delayed.

The previous Request and Certification under 35 U.S.C. § 122(b)(2)(B)(i) has been rescinded. A Notice Regarding Rescission of Nonpublication Request which sets forth the projected publication date of February 18, 2010 accompanies this decision on petition.

This application is being referred to the Office of Data Management for processing into a patent.

Telephone inquiries concerning this decision should be directed to the undersigned at (571) 272-3226.

Andrea Smith
Petitions Examiner
Office of Petitions

ATTACHMENT: Notice Regarding Rescission of Nonpublication Request

UNITED STATES PATENT AND TRADEMARK OFFICE

UNITED STATES DEPARTMENT OF COMMERCE
United States Patent and Trademark Office
Address: COMMISSIONER FOR PATENTS
P.O. Box 1450
Alexandria, Virginia 22313-1450
www.uspto.gov

APPLICATION NUMBER	FILING OR 371(C) DATE	FIRST NAMED APPLICANT	ATTY. DOCKET NO./TITLE
11/072,689	03/04/2005	Michael Hacikyan	1605-3A

CONFIRMATION NO. 1221

44190
WALTER W. DUFT
LAW OFFICES OF WALTER W. DUFT
8616 MAIN ST
SUITE 2
WILLIAMSVILLE, NY 14221

NONPUBLICATION RESCISSION LETTER

OC000000038741018

Date Mailed: 11/12/2009

Communication Regarding Rescission Of Nonpublication Request and/or Notice of Foreign Filing

Applicant's rescission of the previously-filed nonpublication request and/or notice of foreign filing is acknowledged. The paper has been reflected in the Patent and Trademark Office's (USPTO's) computer records so that the earliest possible projected publication date can be assigned.

The projected publication date is 02/18/2010.

If applicant rescinded the nonpublication request before or on the date of "foreign filing,"[1] then no notice of foreign filing is required.

If applicant foreign filed the application after filing the above application and before filing the rescission, and the rescission did not also include a notice of foreign filing, then a notice of foreign filing (not merely a rescission) is required to be filed within 45 days of the date of foreign filing. See 35 U.S.C. § 122(b)(2)(B)(iii), and Clarification of the United States Patent and Trademark Office's Interpretation of the Provisions of 35 U.S.C. § 122(b)(2)(B)(ii)-(iv), 1272 Off. Gaz. Pat. Office 22 (July 1, 2003).

If a notice of foreign filing is required and is not filed within 45 days of the date of foreign filing, then the application becomes abandoned pursuant to 35 U.S.C. § 122(b)(2)(B)(iii). In this situation, applicant should either file a petition to revive or notify the Office that the application is abandoned. See 37 CFR 1.137(f). Any such petition to revive will be forwarded to the Office of Petitions for a decision. Note that the filing of the petition will not operate to stay any period of reply that may be running against the application.

Questions regarding petitions to revive should be directed to the Office of Petitions at (571) 272-3282.

[1] Note, for purpose of this notice, that "foreign filing" means "filing an application directed to the same invention in another country, or under a multilateral international agreement, that requires publication of applications 18 months after filing".

/amsmith/

Office of Data Management, Application Assistance Unit (571) 272-4000, or (571) 272-4200, or 1-888-786-0101

UNITED STATES PATENT AND TRADEMARK OFFICE

UNITED STATES DEPARTMENT OF COMMERCE
United States Patent and Trademark Office
Address: COMMISSIONER FOR PATENTS
P.O. Box 1450
Alexandria, Virginia 22313-1450
www.uspto.gov

WALTER W. DUFT
LAW OFFICES OF WALTER W. DUFT
8616 MAIN ST
SUITE 2
WILLIAMSVILLE, NY 14221

Mail Date: 04/21/2010

Applicant	: Michael Hacikyan	: DECISION ON REQUEST FOR
Patent Number	: 7632556	: RECALCULATION of PATENT
Issue Date	: 12/15/2009	: TERM ADJUSTMENT IN VIEW
Appliction No	: 11/072,689	: OF WYETH AND NOTICE OF INTENT TO
Filed	: 03/04/2005	: ISSUE CERTIFICATE OF CORRECTION
		:

The Request for Recalculation is **GRANTED** to the extent indicated.

The patent term adjustment has been determined to be **1042** days. The USPTO will *sua sponte* issue a certificate of correction reflecting the amount of PTA days determined by the recalculation.

Prior to the issuance of the certificate of correction, the USPTO will afford patentee an opportunity to be heard and request reconsideration. Accordingly, patentee has **one month or thirty (30) days**, whichever is longer, to file a request for reconsideration of this patent term adjustment calculation. See 35 U.S.C. 154(b)(3)(B)(ii) and 37 CFR 1.322(a)(4). No extensions of time will be granted under 37 CFR 1.136.

Patentee should use document code PET.OP if electronically filing a request for reconsideration of this patent term adjustment calculation. The patentee must also include the information required by 37 CFR 1.705(b)(2) and the fee required by 37 CFR 1.18(e). If patentee does not file a timely request for reconsideration of this patent term adjustment calculation including the information required by 37 CFR 1.705(b)(2) and the fee required by 37 CFR 1.18(e), the USPTO will issue a certificate of correction reflecting the PTA determination noted above.

Patentee should be aware that in order to preserve the right to review in the United States District Court for the District of Columbia of the USPTO patent term adjustment determination, patentee must ensure that he or she also take the steps required under 35 U.S.C. 154(b)(4)(A) in a timely manner. Nothing in the request for recalculation should be construed as providing an alternative time frame for commencing a civil action under 35 U.S.C. 154(b)(4)(A).

Any questions concerning this decision should be directed to the Office of Patent Legal Administration at 571-272-7702.

UNITED STATES PATENT AND TRADEMARK OFFICE

Commissioner for Patents
United States Patent and Trademark Office
P.O. Box 1450
Alexandria, VA 22313-1450
www.uspto.gov

JACQUELINE E. HARTT, PH.D
ALLEN, DYER, DOPPELT, MILBRATH & GILCHRIST, P.A.
P.O. BOX 3791
ORLANDO FL 32802-3791

COPY MAILED

OCT 18 2007

OFFICE OF PETITIONS

In re Application of	:	
Benner	:	
Application No. 11/072,714	:	DECISION ON PETITION
Filed: March 4, 2005	:	UNDER 37 CFR 1.137(b)
Attorney Docket No. 0038521	:	

This is a decision on the petition, filed June 14, 2007, which is being treated as a petition under 37 CFR 1.137(b) to revive the instant nonprovisional application for failure to timely notify the U.S. Patent and Trademark (USPTO) of the filing of an application in a foreign country, or under a multinational treaty that requires publication of applications eighteen months after filing. *See* 37 CFR 1.137(f).

The petition is **GRANTED**.

Petitioner states that the instant nonprovisional application is the subject of an application filed in an eighteen-month publication country on November 7, 2005. However, the USPTO was unintentionally not notified of this filing within 45 days subsequent to the filing of the subject application in an eighteen-month publication country.

In view of the above, this application became abandoned pursuant to 35 U.S.C. § 122(b)(2)(B)(iii) and 37 CFR 1.213(c) for failure to timely notify the Office of the filing of an application in a foreign country or under a multilateral international agreement that requires publication of applications 18 months after filing.

A petition to revive an application abandoned pursuant to 35 U.S.C. 122(b)(2)(B)(iii) for failure to notify the USPTO of a foreign filing must be accompanied by:

(1) the required reply which is met by the notification of such filing in a foreign country or under a multinational treaty;
(2) the petition fee as set forth in 37 CFR 1.17(m); and
(3) a statement that the entire delay in filing the required reply from the due date of the reply until the filing of a grantable petition was unintentional.

The instant petition has been found to be in compliance with 37 CFR 1.137(b). Accordingly, the failure to timely notify the USPTO of a foreign or international filing within 45 days after the date of filing of

such foreign or international application as provided by 35 U.S.C. § 122(b)(2)(B)(iii) and 37 CFR 1.213(c) is accepted as having been unintentionally delayed.

The previous Request and Certification under 35 U.S.C. § 122(b)(2)(B)(i) has been rescinded. A Communication Regarding Rescission of Nonpublication Request and/or Notice of Foreign Filing which sets forth the projected publication date of January 24, 2008 accompanies this decision on petition.

Telephone inquiries concerning this decision should be directed to the undersigned at (571) 272-3230.

This application is being forwarded to Technology Center Art Unit 2818 for examination in due course.

Shirene Willis Brantley

Shirene Willis Brantley
Senior Petitions Attorney
Office of Petitions

ATTACHMENT: Communication Regarding Rescission of Nonpublication Request and/or Notice of Foreign Filing

UNITED STATES PATENT AND TRADEMARK OFFICE

UNITED STATES DEPARTMENT OF COMMERCE
United States Patent and Trademark Office
Address: COMMISSIONER FOR PATENTS
P.O. Box 1450
Alexandria, Virginia 22313-1450
www.uspto.gov

APPLICATION NUMBER	FILING/RECEIPT DATE	FIRST NAMED APPLICANT	ATTY. DOCKET NO.
11/072,714	03/04/2005	William R. Benner JR.	0038521

CONFIRMATION NO. 8983

9355
JACQUELINE E. HARTT, PH.D
ALLEN, DYER, DOPPELT, MILBRATH & GILCHRIST, P.A.
P.O. BOX 3791
ORLANDO, FL 32802-3791

Date Mailed: 10/15/2007

Communication Regarding Rescission Of Nonpublication Request and/or Notice of Foreign Filing

Applicant's rescission of the previously-filed nonpublication request and/or notice of foreign filing is acknowledged. The paper has been reflected in the Patent and Trademark Office's (USPTO's) computer records so that the earliest possible projected publication date can be assigned.

The projected publication date is 01/24/2008.

If applicant rescinded the nonpublication request before or on the date of "foreign filing,"[1] then no notice of foreign filing is required.

If applicant foreign filed the application after filing the above application and before filing the rescission, and the rescission did not also include a notice of foreign filing, then a notice of foreign filing (not merely a rescission) is required to be filed within 45 days of the date of foreign filing. See 35 U.S.C. § 122(b)(2)(B)(iii), and Clarification of the United States Patent and Trademark Office's Interpretation of the Provisions of 35 U.S.C. § 122(b)(2)(B)(ii)-(iv), 1272 Off. Gaz. Pat. Office 22 (July 1, 2003).

If a notice of foreign filing is required and is not filed within 45 days of the date of foreign filing, then the application becomes abandoned pursuant to 35 U.S.C. § 122(b)(2)(B)(iii). In this situation, applicant should either file a petition to revive or notify the Office that the application is abandoned. See 37 CFR 1.137(f). Any such petition to revive will be forwarded to the Office of Petitions for a decision. Note that the filing of the petition will not operate to stay any period of reply that may be running against the application.

Questions regarding petitions to revive should be directed to the Office of Petitions at (571) 272-3282. Questions regarding publications of patent applications should be directed to the patent application publication hotline at (703) 605-4283 or by e-mail pgpub@uspto.gov.

[1] Note, for purpose of this notice, that "foreign filing" means "filing an application directed to the same invention in another country, or under a multilateral international agreement, that requires publication of applications 18 months after filing".

UNITED STATES PATENT AND TRADEMARK OFFICE

Commissioner for Patents
United States Patent and Trademark Office
P.O. Box 1450
Alexandria, VA 22313-1450
www.uspto.gov

Michel G. Rabbat
1042 Cornwall Dr.
Holiday FL 34691

COPY MAILED

MAR 2 7 2009

OFFICE OF PETITIONS

In re Application of
Rabbat
Application No. 11/072,753
Filed: March 4, 2005
For: Rabbat Engine

DECISION ON PETITION

This is a decision on the petition, filed October 24, 2008, which is being treated as a petition under 37 CFR 1.181 (no fee) requesting withdrawal of the holding of abandonment in the above-identified application.

The petition under 37 CFR 1.181 is **DISMISSED**.

Any request for reconsideration of this decision should be filed within two (2) months from the mail date of this decision. *Note* 37 CFR 1.181(f). The request for reconsideration should include a cover letter and be entitled as a "Renewed Petition under 37 CFR 1.181 to Withdraw the Holding of Abandonment."

This application was held abandoned for failure to timely respond to the non-final Office action of January 23, 2008, which set a three (3) month shortened statutory period for reply. A Notice of Abandonment was mailed on October 15, 2008.

Petitioner asserts that a reply to the non-final Office action was mailed and received by the Office on February 14, 2008.

Petitioner's argument has been considered by not found to be persuasive. A review of the record confirms that the Office received an incomplete reply on February 14, 2008. The Office action of January 23, 2008 required that a complete reply to the action include a working model. The Office action clearly informed inventor that the failure to submit a working model would result in the abandonment of the application. Petitioner's argument that the working model is too expensive did not prevent the application from going abandoned.

If petitioner cannot supply the evidence necessary to withdraw the holding of abandonment, or simply does not wish to, petitioner should consider filing a petition under 37 CFR 1.137(b) stating that the delay was unintentional. Public Law 97-247, § 3, 96 Stat. 317 (1982), which revised patent and trademark fees, amended 35 U.S.C. § 41(a)(7) to provide for the revival of an "unintentionally" abandoned application without a showing that the delay in prosecution or in late payment of the issue fee was "unavoidable." This amendment to 35 U.S.C. § 41(a)(7) has

been implemented in 37 CFR 1.137(b). An "unintentional" petition under 37 CFR 1.137(b) must be accompanied by the $810.00 petition fee.

Further correspondence with respect to this matter should be addressed as follows:

By Mail: Mail Stop PETITION
Commissioner for Patents
P. O. Box 1450
Alexandria, VA 22313-1450

By hand: U. S. Patent and Trademark Office
Customer Service Window, Mail Stop Petitions
Randolph Building
401 Dulany Street
Alexandria, VA 22314

By facsimile: **(571) 273-8300**
Attn: Office of Petitions

Telephone inquiries concerning this decision should be directed to the undersigned at (571) 272-3215.

Charlema Grant
Petitions Attorney
Office of Petitions

UNITED STATES PATENT AND TRADEMARK OFFICE

Commissioner for Patents
United States Patent and Trademark Office
P.O. Box 1450
Alexandria, VA 22313-1450
www.uspto.gov

MAILED

MAR 12 2009

OFFICE OF PETITIONS

The Dow Chemical Company
Intellectual Property Section
P.O. Box 1967
Midland, MI 48641-1967

In re Application of	:	
Ross A. Wallingford et al.	:	
Application No. 11/072,763	:	DECISION ON PETITION
Filed: March 4, 2005	:	
Attorney Docket No. 64081	:	

This is a decision on the petition under the unintentional provisions of 37 CFR 1.137(b), filed February 18, 2009, to revive the above-identified application.

The petition is **GRANTED**.

The application became abandoned for failure to reply in a timely manner to the non-final Office action mailed June 30, 2008, which set a shortened statutory period for reply of three (3) months. No extensions of time under the provisions of 37 CFR 1.136(a) were obtained. Accordingly, the application became abandoned on October 1, 2008. A Notice of Abandonment was mailed on January 7, 2009.

The petition satisfies the requirements of 37 CFR 1.137(b) in that petitioner has supplied (1) the reply in the form of an amendment after non-final, (2) the petition fee of $1,620, and (3) a proper statement of unintentional delay. Accordingly, the amendment is accepted as being unintentionally delayed.

Telephone inquiries concerning this decision should be directed to Kimberly Inabinet at (571) 272-4618.

The application file does not indicate a change of address has been filed in this case, although the address given on the petition differs from the address of record. A change of address should be filed in this case in accordance with MPEP 601.03. A courtesy copy of this decision is being mailed to the address noted on the petition. However, until otherwise instructed, all future correspondence regarding this application will be mailed solely to the address of record.

This application is being referred to Technology Center AU 1797 for appropriate action by the Examiner in the normal course of business on the reply received February 18, 2009.

Carl Friedman
Petitions Examiner
Office of Petitions

cc: Robert A. Franks
Dr. Reddy's Laboratories, Inc.
200 Somerset Corporate Boulevard
7th Floor
Bridgewater, NJ 08807

UNITED STATES PATENT AND TRADEMARK OFFICE

UNITED STATES DEPARTMENT OF COMMERCE
United States Patent and Trademark Office
Address: COMMISSIONER FOR PATENTS
P.O. Box 1450
Alexandria, Virginia 22313-1450
www.uspto.gov

O'KEEFE, EGAN, PETERMAN & ENDERS LLP
1101 CAPITAL OF TEXAS HIGHWAY SOUTH
#C200
AUSTIN, TX 78746

Mail Date: 04/21/2010

Applicant	: Sverrir Olafsson	: DECISION ON REQUEST FOR
Patent Number	: 7587034	: RECALCULATION of PATENT
Issue Date	: 09/08/2009	: TERM ADJUSTMENT IN VIEW
Appliction No	: 11/072,776	: OF WYETH AND NOTICE OF INTENT TO
Filed	: 03/03/2005	: ISSUE CERTIFICATE OF CORRECTION
		:

The Request for Recalculation is **GRANTED** to the extent indicated.

The patent term adjustment has been determined to be **1224** days. The USPTO will *sua sponte* issue a certificate of correction reflecting the amount of PTA days determined by the recalculation.

Prior to the issuance of the certificate of correction, the USPTO will afford patentee an opportunity to be heard and request reconsideration. Accordingly, patentee has **one month or thirty (30) days**, whichever is longer, to file a request for reconsideration of this patent term adjustment calculation. See 35 U.S.C. 154(b)(3)(B)(ii) and 37 CFR 1.322(a)(4). No extensions of time will be granted under 37 CFR 1.136.

Patentee should use document code PET.OP if electronically filing a request for reconsideration of this patent term adjustment calculation. The patentee must also include the information required by 37 CFR 1.705(b)(2) and the fee required by 37 CFR 1.18(e). If patentee does not file a timely request for reconsideration of this patent term adjustment calculation including the information required by 37 CFR 1.705(b)(2) and the fee required by 37 CFR 1.18(e), the USPTO will issue a certificate of correction reflecting the PTA determination noted above.

Patentee should be aware that in order to preserve the right to review in the United States District Court for the District of Columbia of the USPTO patent term adjustment determination, patentee must ensure that he or she also take the steps required under 35 U.S.C. 154(b)(4)(A) in a timely manner. Nothing in the request for recalculation should be construed as providing an alternative time frame for commencing a civil action under 35 U.S.C. 154(b)(4)(A).

Any questions concerning this decision should be directed to the Office of Patent Legal Administration at 571-272-7702.

UNITED STATES PATENT AND TRADEMARK OFFICE

UNITED STATES DEPARTMENT OF COMMERCE
United States Patent and Trademark Office
Address: COMMISSIONER FOR PATENTS
P.O. Box 1450
Alexandria, Virginia 22313-1450
www.uspto.gov

TEXAS INSTRUMENTS INCORPORATED
P O BOX 655474, M/S 3999
DALLAS, TX 75265

Mail Date: 04/20/2010

Applicant	: Haowen Bu	: DECISION ON REQUEST FOR
Patent Number	: 7601575	: RECALCULATION of PATENT
Issue Date	: 10/13/2009	: TERM ADJUSTMENT IN VIEW
Appliction No	: 11/072,779	: OF WYETH AND NOTICE OF INTENT TO
Filed	: 03/04/2005	: ISSUE CERTIFICATE OF CORRECTION
		:

The Request for Recalculation is **GRANTED** to the extent indicated.

The patent term adjustment has been determined to be **0** days. The USPTO will *sua sponte* issue a certificate of correction reflecting the amount of PTA days determined by the recalculation.

Prior to the issuance of the certificate of correction, the USPTO will afford patentee an opportunity to be heard and request reconsideration. Accordingly, patentee has **one month or thirty (30) days**, whichever is longer, to file a request for reconsideration of this patent term adjustment calculation. See 35 U.S.C. 154(b)(3)(B)(ii) and 37 CFR 1.322(a)(4). No extensions of time will be granted under 37 CFR 1.136.

Patentee should use document code PET.OP if electronically filing a request for reconsideration of this patent term adjustment calculation. The patentee must also include the information required by 37 CFR 1.705(b)(2) and the fee required by 37 CFR 1.18(e). If patentee does not file a timely request for reconsideration of this patent term adjustment calculation including the information required by 37 CFR 1.705(b)(2) and the fee required by 37 CFR 1.18(e), the USPTO will issue a certificate of correction reflecting the PTA determination noted above.

Patentee should be aware that in order to preserve the right to review in the United States District Court for the District of Columbia of the USPTO patent term adjustment determination, patentee must ensure that he or she also take the steps required under 35 U.S.C. 154(b)(4)(A) in a timely manner. Nothing in the request for recalculation should be construed as providing an alternative time frame for commencing a civil action under 35 U.S.C. 154(b)(4)(A).

Any questions concerning this decision should be directed to the Office of Patent Legal Administration at 571-272-7702.

UNITED STATES PATENT AND TRADEMARK OFFICE

Commissioner for Patents
United States Patent and Trademark Office
P.O. Box 1450
Alexandria, VA 22313-1450
www.uspto.gov

Cozen O'Connor, P.C.
1900 Market Street
Philadelphia, PA 19103-3508

COPY MAILED

JUN 0 5 2009

OFFICE OF PETITIONS

In re Application of	:	
Brenda F. Baker et al.	:	
Application No. 11/072,806	:	DECISION ON PETITION
Filed: March 4, 2005	:	TO WITHDRAW
Attorney Docket No. ISIS0115-100(CORE0036US)	:	FROM RECORD

This is a decision on the Request to Withdraw as attorney or agent of record under 37 C.F.R. § 1.36(b), filed July 13, 2006.

The request is **moot because a revocation of power of attorney has been filed**.

A review of the file record indicates that the power of attorney to Paul K. Legaard and all attorneys/agents of record has been revoked by the assignee of the patent application on April 14, 2006. Accordingly, the request to withdraw under 37 C.F.R. § 1.36(b) is moot.

All future communications from the Office will continue to be directed to the below-listed address until otherwise notified by applicant.

Telephone inquires concerning this decision should be directed to Kimberly Inabinet at 571-272-4618.

Kimberly Inabinet
Petitions Examiner
Office of Petitions

cc: WOODCOCK WASHBURN LLP
CIRA CENTRE, 12TH FLOOR
2929 ARCH STREET
PHILADELPHIA PA 19104-2891

UNITED STATES PATENT AND TRADEMARK OFFICE

UNITED STATES DEPARTMENT OF COMMERCE
United States Patent and Trademark Office
Address: COMMISSIONER FOR PATENTS
P.O. Box 1450
Alexandria, Virginia 22313-1450
www.uspto.gov

LOBO & CO., L.P.A.
Suite #2
2655 Euclid Hts. Blvd.
Cleveland Hts., OH 44106-2851

Mail Date: 04/21/2010

Applicant	: Jiren Gu	: DECISION ON REQUEST FOR
Patent Number	: 7435776	: RECALCULATION of PATENT
Issue Date	: 10/14/2008	: TERM ADJUSTMENT IN VIEW
Appliction No	: 11/072,817	: OF WYETH
Filed	: 03/04/2005	:
		:

The Patentee's Request for Recalculation is **DISMISSED.**

This Request is deemed ineligible for consideration for one or more of the following reasons:

(A). The patent for which PTA recalculation is requested is either a design or reissue application or is a reexamination proceeding;

(B). The patent for which PTA recalculation is requested resulted from a utility or plant application filed under 35 USC 111(a) before May 29, 2000 and no CPA filed in the application on/after May 29, 2000;

(C). The patent for which PTA recalculation is requested resulted from an international application in which the international filing date was before May 29, 2000 and no CPA filed in the application on/after May 29, 2000;

(D). The patent for which PTA recalculation is requested issued on/after March 2, 2010;

(E). The Request for Recalculation was filed more than 180 days after the grant date of the patent and the request was not filed within two months of a dismissal of a request for reconsideration of the of the patent term under 37 CFR 1.705(d);

(F). The Request for Recalculation is not solely limited to USPTO pre-Wyeth interpretation of 35 U.S.C. 154(b)(2)(A);

or

(G). A civil action was filed pursuant to 35 U.S.C. 154(b)(4)(A)concerning the same patent at issue in this request.

Patentee may file a reply to this decision dismissing the Request for Recalculation. Patentee must file such reply within one month or thirty days, whichever is longer, of the mail date of the decision dismissing the Request for Recalculation. No fee is required if patentee is asserting in the reply that the dismissal for ineligibility is improper.

Patentee should use document code PET.OP if electronically filing a reply to this dismissal. If the USPTO finds that the request was improperly deemed ineligible, the USPTO will mail applicant a recalculation determination.

Patentee should be aware that in order to preserve the right to review in the United States District Court for the District of Columbia of the USPTO patent term adjustment determination, patentee must ensure that he or she also take the steps required under 35 U.S.C. 154(b)(4)(A). Nothing in the request for recalculation should be construed as providing an alternative time frame for commencing a civil action under 35 U.S.C. 154 (b)(4)(A).

Any questions concerning this decision should be directed to the Office of Patent Legal Administration at 571-272-7702.

UNITED STATES PATENT AND TRADEMARK OFFICE

Commissioner for Patents
United States Patent and Trademark Office
P.O. Box 1450
Alexandria, VA 22313-1450
www.uspto.gov

July 2005

DAVID LUCENTE
SEAGATE TECHNOLOGY, LLC
INTELLECTUAL PROPERTY DEPT. – COL2LGL
389 DISC DRIVE
LONGMONT, CO 80503-9364

SEP 07 2005

In re Application of:	:	
DAVID SPENGLER	:	DECISION ON PETITION TO
Serial No.: 11/072,818	:	MAKE SPECIAL UNDER 37
Filed: 04 March 2005	:	C.F.R. § 1.102(d)
Docket: STL12385	:	

This is a decision on the petition filed on July 11, 2005, to make the above-identified application special under the accelerated examination procedure set forth in MPEP § 708.02(VIII) in accordance with 37 C.F.R. § 1.102(d).

The petition to make the application special is **DISMISSED**.

In support of the petition, petition provides: a) the applicable petition fee; b) a statement that applicant will make an election without traverse if required by the Office; c) a statement that a pre-examination search was made, including the areas searched; d) copies of the references stated as being most closely related to the claimed subject matter; and e) a discussion of some of the references.

For accelerated examination under MPEP § 708.02(VIII) in accordance with 37 C.F.R. § 1.102(d), a showing of the following is required: a) a petition to make special accompanied by the applicable petition fee; b) all claims are directed to a single invention; c) a statement that a pre-examination search was made, not including the search areas; d) a copy of each of the references deemed most closely related to the claimed subject matter; and e) a detailed discussion of the references pointing out with the particularity required by 37 CFR 1.111 (b) and (c), how the claimed subject matter is distinguishable over the references.

The requirements of MPEP § 708.02(VIII)(a), (b), and (d) are considered to have been met. However, petitioner fails to point out with the particularity required by 37 CFR § 1.111 (b) and (c), how the claimed subject matter is distinguishable over the *each* of the references. Therefore, petitioner fails to meet the requirement of MPEP § 708.02(VIII)(e). Furthermore, the petition fails to meet the requirement of MPEP § 708.02(VIII)(c), since the field of search was not presented.

37 CFR § 1.111 (b) states"[a] general allegation that the claims define a patentable invention without specifically pointing out how the language of the claims patentably distinguishes them from the references does not comply with the requirements of this section." 37 CFR § 1.111 (c) states in part "the applicant or patent owner must clearly point out the patentable novelty which he or she thinks the claims present in view of the state of the art disclosed by the references cited or the objections made."

Petitioner presents a brief discussion of the supplied references. However, a *detailed discussion* of how each of the references overcomes each of the independent claims is required for the petition to be granted. For the references which were summarized on page 2, a detailed discussion must discuss what features are disclosed or taught for each independent claim, and what features are neither disclosed nor taught for each independent claim. While the discussion of the references summarized on page 2 discusses the features which distinguish those references from claim 1, there is no discussion of what features would distinguish those references from claim 16. Furthermore, the remaining references in the IDS, which were stated as being included as the most relevant references, were neither summarized nor discussed. Petitioner is required to provide a detailed discussion for *each* reference disclosed as being relevant and *each* independent claim.

While Technology Center Directors may have granted petitions that do not comply with the detailed discussion requirement of the Accelerated Examination procedure, Technology Center Director decisions on petitions are not binding precedent of the Patent Examining Corps, and the application of an improper standard in certain cases does not require the Office to continue to apply the improper standard in all cases. *See In re The Boulevard Entertainment, Inc.*, 334 F.3d 1336, 1343, 67 USPQ2d 1475, 1480 (Fed. Cir. 2003)).

For the above-mentioned reasons, the petition is dismissed. The application will therefore be taken up by the examiner for action in its regular turn.

Any request for reconsideration of this decision must be submitted within 2 (two) months of the date of this decision in order to be considered timely. The essential purpose of the accelerated examination procedure cannot be achieved without discussion of how petitioner believes the claimed invention is distinguished from the prior art; therefore, any resubmission of the petition must provide a detailed discussion of how each of the independent claims is not met by each of the references presented as relevant.

Any inquiry regarding this decision should be directed to Hien H. Phan, Special Program Examiner, at (571) 272-1606.

Hien H. Phan, Special Program Examiner
Technology Center 2800 - Semiconductors,
Electrical & Optical Systems & Components

UNITED STATES PATENT AND TRADEMARK OFFICE

Commissioner for Patents
United States Patent and Trademark Office
P.O. Box 1450
Alexandria, VA 22313-1450
www.uspto.gov

07006

FELLERS SNIDER BLANKENSHIP BAILEY & TIPPENS
BANK ONE TOWER
100 NORTH BROADWAY SUITE 1700
OKLAHOMA, OK 73102-8820

JUL 25 2006

In re Application of: DAVID L. SPENGLER Serial No.: 11/072,818 Filed: 04 March 2005 Docket: STL 12385 Title: REDUCING POWER CONSUMPTION IN A DATA STORAGE SYSTEM	DECISION ON REQUEST FOR RECONSIDERATION TO MAKE SPECIAL UNDER 37 C.F.R. § 1.102(d) & M.P.E.P. § 708.02 (VIII)

This is a decision on the request for reconsideration filed on November 2nd, 2005 of the decision dated September 7th, 2005 dismissing the petition to make the above-identified application special under the accelerated examination procedure set forth in MPEP § 708.02(VIII) and in accordance with 37 C.F.R. § 1.102(d).

The petition to make the application special is **DENIED**.

The decision of September 7th, 2005 dismissed the petition for failing to meet the requirements of MPEP § 708.02(VIII)(c) and (e) that a search be made and a detailed discussion of all of the cited references be provided.

In requesting reconsideration, petitioner provides: i) a statement that a search was made by attorney and an explanation of the search procedure; and ii) a discussion of all of the references deemed most closely related.

The requirements of MPEP § 708.02(VIII)(a), (b) and (d) were considered to have been met in the preceding decision. In the request for reconsideration, petitioner provides a discussion of how each of the references distinguishes over each of the independent claims 1, 7 and 16, thus meeting the requirement of MPEP § 708.02(VIII)(e). However, the petition is deficient because the requirements of MPEP § 708.02(VIII)(c) have not been met.

For accelerated examination MPEP 708.02(VIII) (Eighth Edition, Oct.2005 Revision) requires that applicant:

(c) Submits a statement(s) that a pre-examination search was made, listing the field of search by class and subclass, publication, Chemical Abstracts, foreign patents, etc. The pre-examination search must be directed to the invention as claimed in the application for which special status is requested. A search made by a foreign patent office satisfies this requirement if the claims in the corresponding foreign application are of the same or similar scope to the claims in the U.S. application for which special status is requested.

The request for reconsideration fails to meet the requirements of MPEP 708.02(VIII)(c) because "a statement(s) that a pre-examination search was made, listing the field of search by class and subclass, publication, Chemical Abstracts, foreign patents, etc." has not been provided. The requirements serve as a guide for what constitutes a proper search. For example, the classes and subclasses that were searched, or specific keywords used to search specific chemical abstracts should be disclosed in applicant's statement. Petitioner lists classes and subclasses alleged to be most closely related to the claimed subject matter but does not provide a statement that the search was performed in these fields. Petitioner further provides details of *how* a key-word-in-context (KWIC) search with forward- and backward-citations was performed; however, statements concerning the methods used in the search and the merits thereof are insufficient to establish that a proper search has in fact been made. In this particular case, petitioner does not recite the specific words used in the KWIC search or the specific patents used to generate forward- and backward-citations. A further telltale that the requirement has not been met is that one could not duplicate the search given the information provided by petitioner. The Office will not grant a petition for accelerated examination when it cannot determine that a proper search has been made.

For the above-mentioned reasons, the petition is denied. The prosecution of the application will continue in its normal course.

Applicant has been given one opportunity to perfect the petition to make special according to the procedure set forth in MPEP § 708.02(VIII). Any additional renewed petitions to make special may or may not be considered at the discretion of the Technology Center (TC) Special Program Examiner.

Any inquiry regarding this decision should be directed to Hien H. Phan, Special Program Examiner, at (571) 272-1606.

Hien H. Phan, Special Program Examiner
Technology Center 2800 - Semiconductors,
Electrical & Optical Systems & Components

UNITED STATES PATENT AND TRADEMARK OFFICE

SEP 21 2005

Commissioner for Patents
United States Patent and Trademark Office
P.O. Box 1450
Alexandria, VA 22313-1450
www.uspto.gov

Horst M. Kasper
13 Forest Drive
Warren, NJ 07059

In re application	:	**DECISION ON PETITION**
Bartolomej Janek	:	**TO MAKE SPECIAL**
Application No. 11/072,820	:	**(PROSPECTIVE MANUFACTURE)**
Filed: March 4, 2005	:	
For: GEAR DRIVE		

This is a decision on the petition under 37 C.F.R §1.102(d) filed March 4, 2005 to make the above-identified application special. The petition requests that the above-identified application be made special under the procedure set forth in MPEP 708.02, item I: Prospective Manufacture.

The petition is **DISMISSED**.

MPEP 708.02 states that a Petition to Make Special based on Prospective Manufacture must have the following: (1) the appropriate petition fee under 37 CFR 1.17(i); (2) a statement by the assignee, applicant, or attorney alleging: (A) the possession by the prospective manufacturer of sufficiently available capital (stating approximately the amount) and facilities (stating briefly the nature thereof) or that sufficiently available capital and facilities will be made available upon grant of a patent, with the proviso that if the prospective manufacturer is an individual a corroborating statement from a responsible party is required; (B) that the prospective manufacturer will not begin or increase production unless certain that the patent will be granted; (C) that the prospective manufacturer obligates themselves to manufacture the invention in the U.S. in quantity immediately upon the allowance of claims or issuance of a patent which will protect the investment of capital and facilities; and (D) that he or she has made a careful and thorough search of the prior art, or has good knowledge of the prior art, and has sent a copy of the references deemed most closely related to the subject matter encompassed by the claims.

The petition filed March 4, 2005 includes all of the requirements above except fully meeting items (A), (B) and (C). With regard to item (A), the required statements as to the approximate amount of capital and the general nature of the facilities have not been included. With regard to items (B) and (C), the required statements as to who the manufacturer is are not included.

Any request for reconsideration must be filed within TWO MONTHS of the date of this decision. Extensions of time under 37 CFR 1.136(a) are permitted. Should petitioner desire reconsideration, he should supplement this petition by a declaration or statement giving the information as outlined above. Petitioner should promptly submit such a renewed petition to the Commissioner of Patents and Trademarks, P.O. Box 1450, Alexandria, VA 22313-1450. The envelope should indicate that the correspondence be brought to the attention of Technology Center 3600.

Kenneth J. Dorner
Special Programs Examiner
Technology Center 3600
(571) 272-6587

KJD/mg : 07/14/05

UNITED STATES PATENT AND TRADEMARK OFFICE

UNITED STATES DEPARTMENT OF COMMERCE
United States Patent and Trademark Office
Address: COMMISSIONER FOR PATENTS
P.O. Box 1450
Alexandria, Virginia 22313-1450
www.uspto.gov

APPLICATION NO.	FILING DATE	FIRST NAMED INVENTOR	ATTORNEY DOCKET NO.	CONFIRMATION NO.
11/072,827	03/04/2005	Richard Baron	AVERP3423USC	7907

7590 05/21/2008

Neil A. DuChez
Renner, Otto, Boisselle & Sklar, LLP
Nineteenth Floor
1621 Euclid Avenue
Cleveland, OH 44115

EXAMINER
KILIMAN, LESZEK B

ART UNIT	PAPER NUMBER
1794	

MAIL DATE	DELIVERY MODE
05/21/2008	PAPER

Please find below and/or attached an Office communication concerning this application or proceeding.

The time period for reply, if any, is set in the attached communication.

UNITED STATES PATENT AND TRADEMARK OFFICE

Commissioner for Patents
United States Patent and Trademark Office
P.O. Box 1450
Alexandria, VA 22313-1450
www.uspto.gov

WK

Mailed: 5-21-08

In re application of	:	
Richard Baron	:	DECISION ON
Serial No. 11/072,827	:	PETITION
Filed: March 4, 2005	:	
For: Adhesive Articles Which Contain At Least One Hydrophilic Or Hydrophobic Layer, Method For Making And Uses For Same	:	

This is a sua sponte response to withdraw the abandonment of this application and is being considered as a PETITION UNDER RULE 37 C.F.R. 1.181(a) TO WITHDRAW NOTICE OF ABANDONMENT. A review of the record indicates that the examiner issued a non-final rejection on November 1, 2006. On March 9, 2007 in an interview, the Examiner agreed to restart and remail the office action of November 1, 2006 and to also clarify his position. The Examiner did not do this and subsequently the application became abandoned. A review of the circumstances dictates that the application should not have been abandoned and a new office action should have been mailed out.

DECISION

The instant request is accepted as a timely petition under 37 C.F.R. 1.181 (no fee).

The Petition is **GRANTED**.

The application is returned to pending status and forwarded to the examiner for a new office action as agreed to on March 9, 2007. The previous office action of November 1, 2006 has been vacated.

Jacqueline M. Stone

Jacqueline Stone, Director
Technology Center 1700
Chemical and Materials Engineering

Neil A. DuChez
Renner, Otto, Boisselle & Sklar, LLP
Nineteenth Floor
1621 Euclid Avenue
Cleveland OH 44115

UNITED STATES PATENT AND TRADEMARK OFFICE

UNITED STATES DEPARTMENT OF COMMERCE
United States Patent and Trademark Office
Address: COMMISSIONER FOR PATENTS
P.O. Box 1450
Alexandria, Virginia 22313-1450
www.uspto.gov

EXXONMOBIL CHEMICAL COMPANY
5200 BAYWAY DRIVE
P.O. BOX 2149
BAYTOWN, TX 77522-2149

Mail Date: 05/10/2010

Applicant	: Machteld M. Mertens	: DECISION ON REQUEST FOR
Patent Number	: 7622624	: RECALCULATION of PATENT
Issue Date	: 11/24/2009	: TERM ADJUSTMENT IN VIEW
Application No	: 11/072,830	: OF WYETH AND NOTICE OF INTENT TO
Filed	: 03/04/2005	: ISSUE CERTIFICATE OF CORRECTION
		:

The Request for Recalculation is **GRANTED** to the extent indicated.

The patent term adjustment has been determined to be **1189** days. The USPTO will *sua sponte* issue a certificate of correction reflecting the amount of PTA days determined by the recalculation.

Prior to the issuance of the certificate of correction, the USPTO will afford patentee an opportunity to be heard and request reconsideration. Accordingly, patentee has **one month or thirty (30) days**, whichever is longer, to file a request for reconsideration of this patent term adjustment calculation. See 35 U.S.C. 154(b)(3)(B)(ii) and 37 CFR 1.322(a)(4). No extensions of time will be granted under 37 CFR 1.136.

Patentee should use document code PET.OP if electronically filing a request for reconsideration of this patent term adjustment calculation. The patentee must also include the information required by 37 CFR 1.705(b)(2) and the fee required by 37 CFR 1.18(e). If patentee does not file a timely request for reconsideration of this patent term adjustment calculation including the information required by 37 CFR 1.705(b)(2) and the fee required by 37 CFR 1.18(e), the USPTO will issue a certificate of correction reflecting the PTA determination noted above.

Patentee should be aware that in order to preserve the right to review in the United States District Court for the District of Columbia of the USPTO patent term adjustment determination, patentee must ensure that he or she also take the steps required under 35 U.S.C. 154(b)(4)(A) in a timely manner. Nothing in the request for recalculation should be construed as providing an alternative time frame for commencing a civil action under 35 U.S.C. 154(b)(4)(A).

Any questions concerning this decision should be directed to the Office of Patent Legal Administration at 571-272-7702.

UNITED STATES PATENT AND TRADEMARK OFFICE

Commissioner for Patents
United States Patent and Trademark Office
P.O. Box 1450
Alexandria, VA 22313-1450
www.uspto.gov

COPY MAILED

OCT 31 2006

OFFICE OF PETITIONS

FISH & RICHARDSON PC
P.O. BOX 1022
MINNEAPOLIS MN 55440-1022

In re Application of	:	
Cosic, Jasmin	:	
Application No. 11/072,845	:	DECISION ON PETITION
Filed: March 4, 2005	:	TO WITHDRAW
Attorney Docket No. 13409-00202	:	FROM RECORD
	:	

This is a decision on the Request to Withdraw as attorney or agent of record under 37 C.F.R. § 1.36(b), filed February 3, 2006.

The request is **APPROVED**.

A grantable request to withdraw as attorney/agent of record must be signed by every attorney/agent seeking to withdraw or contain a clear indication that one attorney is signing on behalf of another/others. A request to withdraw will not be approved unless at least 30 (thirty) days would remain between the date of approval and the later of the expiration date of a time to file a response or the expiration date of the maximum time period which can be extended under 37 C.F.R. § 1.136(a).

The request was signed by Paul A. Pysher on behalf of all attorneys of record who are associated with this application.

All attorneys/agents associated with this application have been withdrawn.

Applicant is reminded that there is no attorney of record at this time.

Telephone inquiries concerning this decision should be directed to April Wise at 571-272-1642.

April M. Wise
Petitions Examiner
Office of Petitions

cc: Jasmin Cosic
39 Benefit Street
Pawtucket, RI 02861

UNITED STATES PATENT AND TRADEMARK OFFICE

Commissioner for Patents
United States Patent and Trademark Office
P.O. Box 1450
Alexandria, VA 22313-1450
www.uspto.gov

COPY MAILED

DEC 0 9 2005

OFFICE OF PETITIONS

COZEN O'CONNOR, P.C.
1900 MARKET STREET
PHILADELPHIA PA 19103-3508

In re Application of Bennett et al. Application No. 11/072,846 Filed: March 4, 2005 Attorney Docket No. BNDL-0016US.P1 Title: Modulation of SIC26A2 Expression	DECISION REFUSING STATUS UNDER 37 CFR 1.47(a)

This is in response to the petition filed November 7, 2005 (November 3, 2005) certificate of mailing, under 37 CFR. §1.47(b). This petition is properly treated as a petition under 37 CFR 1.47(a).

The petition under 37 CFR. §1.47(a) is **DISMISSED**.

Rule 47 applicant is given TWO MONTHS from the mailing date of this decision to reply, correcting the below-noted deficiencies. Any reply should be entitled "Request for Reconsideration of Petition Under 37 CFR. §1.47(a)," and should only address the deficiencies noted below, except that the reply may include an oath or declaration executed by the non-signing inventor. **Failure to respond will result in abandonment of the application**. Any extensions of time will be governed by 37 CFR. §1.136(a).

The above-identified application was filed on March 4, 2005, without an executed oath or declaration. Accordingly, on April 5, 2005, applicant was mailed a "Notice to File Missing Parts of Nonprovisional Application - Filing Date Granted," requiring for the purposes of this decision an executed oath or declaration in compliance with §1.63, and a surcharge for its late filing. This Notice set an extendable two-month period for reply of June 5, 2005.

In reply, applicant filed a petition, and a partially executed declaration. To make timely a five month request for extension of time and fee were submitted with the instant petition.

A grantable petition under 37 CFR. §1.47(a) requires: (1) proof that the non-signing inventor cannot be reached or refuses to sign the oath or declaration after having been presented with the application papers (specification, claims and drawings); (2) an acceptable oath or declaration in compliance with 35 U.S.C. §§115 and 116; (3) the petition fee; and (4) a statement of the last known address of the non-signing inventor.

The instant petition does not satisfy requirement (1).

As to item (1), before a refusal can be alleged, applicant must demonstrate a bona fide attempt was made to present a copy of application papers (specification, including claims, drawings, and oath or declaration) to the non-signing inventor. See MPEP 409.03(d). Where an inventor cannot be located/reached as in the case of inventors Xu and Flournoy, rule 47 applicant must demonstrate diligent effort was made to find or reach the non-signing inventors. See MPEP 409.03(d). The statements made in the petition do not illustrate "diligent effort" was made to locate the non-signing inventors.

Rule 47 applicant states that two letters were sent to inventor Xu at her last known mailing address but they were returned without a forwarding address. Rule 47 applicant further states that they were informed that inventor Flournoy no longer resided at her last known address and that a forwarding address could not be provided. There is no indication that rule 47 applicant ever made additional attempts to locate either inventor. Copies of documentary evidence such as internet searches, certified mail return receipts, cover letters of instructions, telegrams, that support a finding that the nonsigning inventor could not be found or reached should be made part of the statement. The steps taken to locate the whereabouts of the nonsigning inventor should be included in a statement of facts. It is important that the statement contain facts as opposed to conclusions. Petitioner should present a signed statement of facts from a person that has first hand knowledge of the diligent efforts made to locate the non-signing inventor. If inventors Xu and Flournoy addresses are located a copy of the application papers (specification, including claims, drawings, and oath or declaration) should be mailed to the inventors' mailing addresses.

The address on the petition differs from the correspondence address of record. While a courtesy copy of this decision is being mailed to the person signing the present petition, all future correspondence will be directed to the address currently of record until such time as appropriate instructions are received to the contrary.

Further correspondence with respect to this matter should be addressed as follows:

By mail:	Mail Stop Petition Commissioner for Patents P.O. Box 1450 Alexandria, VA 22313-1450
By facsimile:	(571) 273-8300
By delivery service: (FedEx, UPS, DHL, etc.)	U.S. Patent and Trademark Office Customer Service Window, Randolph Building 401 Dulany Street Alexandria, VA 22314

Telephone inquiries related to this decision may be directed to the undersigned at (571) 272-3215.

Charlema R. Grant

Charlema R. Grant
Petitions Attorney
Office of Petitions

cc: Collen J. McKiernan
Isis Pharmaceuticals, Inc.
1896 Rutherford Rd.
Carlsbad, CA 92008

UNITED STATES PATENT AND TRADEMARK OFFICE

Commissioner for Patents
United States Patent and Trademark Office
P.O. Box 1450
Alexandria, VA 22313-1450
www.uspto.gov

COZEN O'CONNOR, P.C.
1900 MARKET STREET
PHILADELPHIA PA 19103-3508

COPY MAILED

DEC 0 9 2005

OFFICE OF PETITIONS

In re Application of Bennett et al. Application No. 11/072,846 Filed: March 4, 2005 Attorney Docket No. BNDL-0016US.P1 Title: Modulation of SIC26A2 Expression	DECISION REFUSING STATUS UNDER 37 CFR 1.47(a)

This is in response to the petition filed November 7, 2005 (November 3, 2005) certificate of mailing, under 37 CFR. §1.47(b). This petition is properly treated as a petition under 37 CFR 1.47(a).

The petition under 37 CFR. §1.47(a) is **DISMISSED**.

Rule 47 applicant is given TWO MONTHS from the mailing date of this decision to reply, correcting the below-noted deficiencies. Any reply should be entitled "Request for Reconsideration of Petition Under 37 CFR. §1.47(a)," and should only address the deficiencies noted below, except that the reply may include an oath or declaration executed by the non-signing inventor. **Failure to respond will result in abandonment of the application**. Any extensions of time will be governed by 37 CFR. §1.136(a).

The above-identified application was filed on March 4, 2005, without an executed oath or declaration. Accordingly, on April 5, 2005, applicant was mailed a "Notice to File Missing Parts of Nonprovisional Application - Filing Date Granted," requiring for the purposes of this decision an executed oath or declaration in compliance with §1.63, and a surcharge for its late filing. This Notice set an extendable two-month period for reply of June 5, 2005.

In reply, applicant filed a petition, and a partially executed declaration. To make timely a five month request for extension of time and fee were submitted with the instant petition.

A grantable petition under 37 CFR. §1.47(a) requires: (1) proof that the non-signing inventor cannot be reached or refuses to sign the oath or declaration after having been presented with the application papers (specification, claims and drawings); (2) an acceptable oath or declaration in compliance with 35 U.S.C. §§115 and 116; (3) the petition fee; and (4) a statement of the last known address of the non-signing inventor.

The instant petition does not satisfy requirement (1).

As to item (1), before a refusal can be alleged, applicant must demonstrate a bona fide attempt was made to present a copy of application papers (specification, including claims, drawings, and oath or declaration) to the non-signing inventor. See MPEP 409.03(d). Where an inventor cannot be located/reached as in the case of inventors Xu and Flournoy, rule 47 applicant must demonstrate diligent effort was made to find or reach the non-signing inventors. See MPEP 409.03(d). The statements made in the petition do not illustrate "diligent effort" was made to locate the non-signing inventors.

Rule 47 applicant states that two letters were sent to inventor Xu at her last known mailing address but they were returned without a forwarding address. Rule 47 applicant further states that they were informed that inventor Flournoy no longer resided at her last known address and that a forwarding address could not be provided. There is no indication that rule 47 applicant ever made additional attempts to locate either inventor. Copies of documentary evidence such as internet searches, certified mail return receipts, cover letters of instructions, telegrams, that support a finding that the nonsigning inventor could not be found or reached should be made part of the statement. The steps taken to locate the whereabouts of the nonsigning inventor should be included in a statement of facts. It is important that the statement contain facts as opposed to conclusions. Petitioner should present a signed statement of facts from a person that has first hand knowledge of the diligent efforts made to locate the non-signing inventor. If inventors Xu and Flournoy addresses are located a copy of the application papers (specification, including claims, drawings, and oath or declaration) should be mailed to the inventors' mailing addresses.

The address on the petition differs from the correspondence address of record. While a courtesy copy of this decision is being mailed to the person signing the present petition, all future correspondence will be directed to the address currently of record until such time as appropriate instructions are received to the contrary.

Further correspondence with respect to this matter should be addressed as follows:

By mail:	Mail Stop Petition Commissioner for Patents P.O. Box 1450 Alexandria, VA 22313-1450
By facsimile:	(571) 273-8300
By delivery service: (FedEx, UPS, DHL, etc.)	U.S. Patent and Trademark Office Customer Service Window, Randolph Building 401 Dulany Street Alexandria, VA 22314

Telephone inquiries related to this decision may be directed to the undersigned at (571) 272-3215.

Charlema R. Grant

Charlema R. Grant
Petitions Attorney
Office of Petitions

cc: Collen J. McKieman
Isis Pharmaceuticals, Inc.
1896 Rutherford Rd.
Carlsbad, CA 92008

UNITED STATES PATENT AND TRADEMARK OFFICE

Commissioner for Patents
United States Patent and Trademark Office
P.O. Box 1450
Alexandria, VA 22313-1450
www.uspto.gov

COZEN O'CONNOR, P.C.
1900 MARKET STREET
PHILADELPHIA PA 19103-3508

COPY MAILED

FEB 28 2006

OFFICE OF PETITIONS

In re Application of
Bennett et al.
Application No. 11/072,846
Filed: March 4, 2005
Attorney Docket No. BNDL-0016US.P1
Title: Modulation of SIC26A2 Expression

DECISION GRANTING STATUS
UNDER 37 CFR 1.47(A)

This is in response to the renewed petition under 37 CFR 1.47(a) filed February 7, 2006.

The petition is GRANTED.

Petitioner has shown that non-signing inventors Xu and Flournoy have not been located. The efforts outlined by petitioner demonstrate diligent effort was used to attempt to locate non-signing inventors Xu and Flournoy .

The above-identified application and papers have been reviewed and found in compliance with 37 CFR 1.47(a). This application is hereby accorded Rule 1.47(a) status.

As provided in Rule 1.47(c), this Office will forward notice of this application's filing to the non-signing inventor at the address given in the petition. Notice of the filing of this application will also be published in the Official Gazette.

After this decision is mailed, the application will be forwarded to the Office of Initial Patent Examination for further processing.

Telephone inquiries regarding this communication should be directed to the undersigned at (571) 272-3215.

Charlema R. Grant
Petitions Attorney
Office of Petitions

UNITED STATES PATENT AND TRADEMARK OFFICE

Commissioner for Patents
United States Patent and Trademark Office
P.O. Box 1450
Alexandria, VA 22313-1450
www.uspto.gov

Xiaoing S. Xu
18 Main Street Apt. #3
Madison, NJ 07940

COPY MAILED

FEB 28 2006

OFFICE OF PETITIONS

In re Application of
Bennett et al.
Application No. 11/072,846
Filed: March 4, 2005
Attorney Docket No. BNDL-0016US.P1
Title: Modulation of SIC26A2 Expression

LETTER

Dear Mr. Xu:

You are named as a joint inventor in the above-identified United States patent application filed under the provisions of 35 U.S.C. 116 (United States Code) and 37 C.F.R. § 1.47(a), Rules of Practice in Patent Cases. Should a patent be granted on the application you will be designated therein as a joint inventor.

As a named inventor you are entitled to inspect any paper in the file wrapper of the application, order copies of all or any part thereof (at a prepaid cost as per 37 C.F.R. § 1.19) or make your position of record in the application. Alternatively, you may arrange to do any of the preceding through a registered patent attorney or agent presenting written authorization from you. If you care to join the application, the attorney of record (see below) would presumably assist you. Joining in the application would entail the filing of an appropriate oath or declaration by you pursuant to 37 C.F.R. § 1.63.

Telephone inquiries regarding this communication should be directed to Petitions Attorney Charlema R. Grant at (571) 272-3215. Requests for information regarding your application should be directed to the File Information Unit at (703) 308-2733. Information regarding how to pay for and order a copy of the application, or a specific paper in the application, should be directed to Certification Division at (703) 308-9726 or 1-800-972-6382 (outside the Washington D.C. area).

Charlema R. Grant
Petitions Attorney
Office of Petitions

COZEN O'CONNOR, P.C.
1900 MARKET STREET
PHILADELPHIA PA 19103-3508

ATTN COLLEEN J. MC KIERNAN

UNITED STATES PATENT AND TRADEMARK OFFICE

PKL

19190182-100
(163696)

Commissioner for Patents
United States Patent and Trademark Office
P.O. Box 1450
Alexandria, VA 22313-1450
www.uspto.gov

RECEIVED
COZEN IP DEPT.

MAR 03 2006

COZEN O'CONNOR, P.C.
1900 MARKET STREET
PHILADELPHIA PA 19103-3508

DUE DATE N/A
MAX DATE
DOCKETED BY

COPY MAILED

FEB 28 2006

OFFICE OF PETITIONS

In re Application of
Bennett et al.
Application No. 11/072,846
Filed: March 4, 2005
Attorney Docket No. BNDL-0016US.P1
Title: Modulation of SIC26A2 Expression

DECISION GRANTING STATUS
UNDER 37 CFR 1.47(A)

RECEIVED

MAR 20 2006

PATENT DEPT.

This is in response to the renewed petition under 37 CFR 1.47(a) filed February 7, 2006.

The petition is GRANTED.

Petitioner has shown that non-signing inventors Xu and Flournoy have not been located. The efforts outlined by petitioner demonstrate diligent effort was used to attempt to locate non-signing inventors Xu and Flournoy.

The above-identified application and papers have been reviewed and found in compliance with 37 CFR 1.47(a). This application is hereby accorded Rule 1.47(a) status.

As provided in Rule 1.47(c), this Office will forward notice of this application's filing to the non-signing inventor at the address given in the petition. Notice of the filing of this application will also be published in the Official Gazette.

After this decision is mailed, the application will be forwarded to the Office of Initial Patent Examination for further processing.

Telephone inquiries regarding this communication should be directed to the undersigned at (571) 272-3215.

Charlema R. Grant
Petitions Attorney
Office of Petitions

BEST AVAILABLE COPY

3/21/06

UNITED STATES PATENT AND TRADEMARK OFFICE

UNITED STATES DEPARTMENT OF COMMERCE
United States Patent and Trademark Office
Address: COMMISSIONER FOR PATENTS
P.O. Box 1450
Alexandria, Virginia 22313-1450
www.uspto.gov

E I DU PONT DE NEMOURS AND COMPANY
LEGAL PATENT RECORDS CENTER
BARLEY MILL PLAZA 25/1122B
4417 LANCASTER PIKE
WILMINGTON, DE 19805

Mail Date: 05/03/2010

Applicant	: Leo Ernest Manzer	: DECISION ON REQUEST FOR
Patent Number	: 7612216	: RECALCULATION of PATENT
Issue Date	: 11/03/2009	: TERM ADJUSTMENT IN VIEW
Application No	: 11/072,848	: OF WYETH AND NOTICE OF INTENT TO
Filed	: 03/04/2005	: ISSUE CERTIFICATE OF CORRECTION
		:

The Request for Recalculation is **GRANTED** to the extent indicated.

The patent term adjustment has been determined to be **1188** days. The USPTO will *sua sponte* issue a certificate of correction reflecting the amount of PTA days determined by the recalculation.

Prior to the issuance of the certificate of correction, the USPTO will afford patentee an opportunity to be heard and request reconsideration. Accordingly, patentee has **one month or thirty (30) days**, whichever is longer, to file a request for reconsideration of this patent term adjustment calculation. See 35 U.S.C. 154(b)(3)(B)(ii) and 37 CFR 1.322(a)(4). No extensions of time will be granted under 37 CFR 1.136.

Patentee should use document code PET.OP if electronically filing a request for reconsideration of this patent term adjustment calculation. The patentee must also include the information required by 37 CFR 1.705(b)(2) and the fee required by 37 CFR 1.18(e). If patentee does not file a timely request for reconsideration of this patent term adjustment calculation including the information required by 37 CFR 1.705(b)(2) and the fee required by 37 CFR 1.18(e), the USPTO will issue a certificate of correction reflecting the PTA determination noted above.

Patentee should be aware that in order to preserve the right to review in the United States District Court for the District of Columbia of the USPTO patent term adjustment determination, patentee must ensure that he or she also take the steps required under 35 U.S.C. 154(b)(4)(A) in a timely manner. Nothing in the request for recalculation should be construed as providing an alternative time frame for commencing a civil action under 35 U.S.C. 154(b)(4)(A).

Any questions concerning this decision should be directed to the Office of Patent Legal Administration at 571-272-7702.

UNITED STATES PATENT AND TRADEMARK OFFICE

COMMISSIONER FOR PATENTS
UNITED STATES PATENT AND TRADEMARK OFFICE
P.O. BOX 1450
ALEXANDRIA, VA 22313-1450
WWW.USPTO.GOV

Paper No. None

NEWMARKET SERVICES CORPORATION
c/o JOHN H. THOMAS, P.C.
536 GRANITE AVENUE
RICHMOND VA 23226

COPY MAILED

MAR 14 2007

OFFICE OF PETITIONS

In re Application of	:	
Gregory H. Guinther et al.	:	
Application No. 11/072,872	:	
Filed: March 4, 2005	:	DECISION ON PETITION
Attorney Docket No. NM 7568-C1	:	UNDER 37 C.F.R. §1.181(A)
Title: EMISSIONS CONTROL SYSTEM	:	
FOR DIESEL FUEL COMBUSTION	:	
AFTER TREATMENT SYSTEM	:	

This is a decision on the petition pursuant to 37 C.F.R. §1.181(a), filed on December 4, 2006.

The above-identified application became abandoned for failure to reply in a timely manner to the non-final Office action, mailed February 24, 2006, which set a shortened statutory period for reply of three months. No response was received, and no extensions of time under the provisions of 37 C.F.R. §1.136(a) were requested. Accordingly, the above-identified application became abandoned on May 25, 2006. A notice of abandonment was mailed subsequent to the filing of this petition on December 6, 2006.

With the present petition, Petitioner has set forth that the mailing was not received.

A review of the electronic file reveals that, at the time the Office action was mailed, the correspondence address of record was different from the present correspondence address, due to the Change of Correspondence Address filed on November 22, 2006. The non-final Office action was mailed to the address of record

at the time, which was "Dennis H. Rainear, Chief Patent Counsel, Ethyl Corporation, 330 South Fourth Street, Richmond, VA, 23219." On November 22, 2006, Applicant submitted a "Revocation of Power of Attorney and Grant of New Power of Attorney, Change of Correspondence Address (emphasis added) and Change of Attorney Docket Number," which was signed by Mr. Rainear.

Petitioner has not provided any indication as to when the correct correspondence address changed, making it unclear whether the Office action was properly mailed by this Office to the correspondence address and Applicant did not receive the Office action, or whether Applicant had changed it's correspondence address prior to the mailing of the Office action, but failed to timely notify this Office of the change. As such, it appears that at some point subsequent to the filing of this application, the address changed from 330 South Fourth Street to 536 Granite Avenue. What is not clear is when this move occurred, and whether the request to change the correspondence address was timely filed. Applicant has not provided any indication as to when his office moved and/or responsibility for this patent was transferred[1].

It is noted that the request to change the correspondence address was received shortly after Petitioner learned of the existence of the non-final Office action[2]. Therefore, it appears that the Office action was properly mailed by this Office to the correspondence address of record, and Petitioner did not receive the Office action because the proper address was no longer 330 South Fourth Street. Petitioner must clarify, on the record, when the correct correspondence address changed.

Petitioner is advised there is a strong presumption that the Office action, properly addressed and delivered to the United States Postal Service, was in fact delivered to the Addressee's address of record.

Accordingly, Petitioner's assertion, that the Office action was not received, is insufficient to justify withdrawing the holding of abandonment. Petitioner should file a Renewed Petition and include the necessary clarifications and copies of any pertinent documents.

Pursuant to the discussion above, the petition must be **DISMISSED**.

Any reply must be submitted within **TWO MONTHS** from the mail date of this decision. Extensions of time under 37 C.F.R. §1.136(a)

---

1 It is noted that Mr. Rainer appears to have formerly been the Chief Patent Counsel of the Ethyl Corporation, but now lists himself as the Chief Patent Counsel of the NewMarket Corporation.
2 See Rainer statement, paragraph 2.

are permitted. The reply should include a cover letter entitled "Renewed Petition Under 37 C.F.R. §1.181(a)". This is not a final agency action within the meaning of 5 U.S.C 704.

Alternatively, Petitioner may wish to consider filing a petition pursuant to 37 C.F.R. §§1.137(a) and/or (b). No assurance can be made that any remedy will be forthcoming.

The renewed petition should indicate in a prominent manner that the attorney handling this matter is Paul Shanoski, and may be submitted by mail[3], hand-delivery[4], or facsimile[5]. If responding by mail, Petitioner is advised not to place the undersigned's name on the envelope. Only the information that appears in the footnote should be included - adding anything else to the address will delay the delivery of the response to the undersigned.

Telephone inquiries regarding *this decision* should be directed to the undersigned at (571) 272-3225[6]. All other inquiries concerning examination procedures or status of the application should be directed to the Technology Center.

Paul Shanoski
Senior Attorney
Office of Petitions
United States Patent and Trademark Office

---

3 Mail Stop Petition, Commissioner for Patents, United States Patent and Trademark Office, P.O. Box 1450, Alexandria, VA, 22313-1450.
4 Customer Window, Randolph Building, 401 Dulaney Street, Alexandria, VA, 22314.
5 (571) 273-8300- please note this is a central facsimile number.
6 Petitioner will note that all practice before the Office should be in writing, and the action of the Office will be based exclusively on the written record in the Office. See 37 C.F.R. §1.2. As such, Petitioner is reminded that no telephone discussion may be controlling or considered authority for Petitioner's further action(s).

UNITED STATES PATENT AND TRADEMARK OFFICE

COMMISSIONER FOR PATENTS
UNITED STATES PATENT AND TRADEMARK OFFICE
P.O. BOX 1450
ALEXANDRIA, VA 22313-1450
WWW.USPTO.GOV

Paper No. None

NEWMARKET SERVICES CORPORATION
c/o JOHN H. THOMAS, P.C.
536 GRANITE AVENUE
RICHMOND VA 23226

COPY MAILED

JUN 21 2007

OFFICE OF PETITIONS

In re Application of	:	
Gregory H. Guinther et al.	:	
Application No. 11/072,872	:	
Filed: March 4, 2005	:	DECISION ON RENEWED PETITION
Attorney Docket No. NM 7568-C1	:	UNDER 37 C.F.R. §1.181(A)
Title: EMISSIONS CONTROL SYSTEM	:	
FOR DIESEL FUEL COMBUSTION	:	
AFTER TREATMENT SYSTEM	:	

This is a decision on the renewed petition pursuant to 37 C.F.R. §1.181(a), filed on April 30, 2007.

The above-identified application became abandoned for failure to reply in a timely manner to the non-final Office action, mailed February 24, 2006, which set a shortened statutory period for reply of three months. No response was received, and no extensions of time under the provisions of 37 C.F.R. §1.136(a) were requested. Accordingly, the above-identified application became abandoned on May 25, 2006. A notice of abandonment was mailed subsequent to the filing of this petition on December 6, 2006.

An original petition was filed on December 4, 2006, and was dismissed via the mailing of a decision on March 14, 2007.

Considering the facts and circumstances of the delay at issue, as set forth on both the original petition and this renewed petition, it is concluded that Petitioner has met his burden of establishing that the non-final Office action, mailed February 24, 2006 was not received.

Accordingly, the petition under 37 C.F.R. § 1.181(a) is **GRANTED**. The holding of abandonment is **WITHDRAWN**.

The Technology Center will be notified of this decision. The Technology Center's support staff will re-mail the non-final Office action, mailed February 24, 2006, and will set a new period for response.

Telephone inquiries regarding *this decision* should be directed to the undersigned at (571) 272-3225. All other inquiries concerning examination procedures or status of the application should be directed to the Technology Center.

Paul Shanoski
Senior Attorney
Office of Petitions
United States Patent and Trademark Office

UNITED STATES PATENT AND TRADEMARK OFFICE

Commissioner for Patents
United States Patent and Trademark Office
P.O. Box 1450
Alexandria, VA 22313-1450
www.uspto.gov

Haynes and Boone, LLP
901 Main Street
Suite 3100
Dallas, TX 75202-3789

COPY MAILED

AUG 2 0 2007

OFFICE OF PETITIONS

In re Application of	:	
Robert Lance Cook et al.	:	
Application No. 11/072,893	:	DECISION ON PETITION
Filed: March 4, 2005	:	TO WITHDRAW
Attorney Docket No. 25791.355	:	FROM RECORD
	:	

This is a decision on the Request to Withdraw as attorney or agent of record under 37 C.F.R. § 1.36(b), filed April 19, 2007.

The request is **NOT APPROVED**.

A grantable request to withdraw as attorney/agent of record must be signed by every attorney/agent seeking to withdraw or contain a clear indication that one attorney is signing on behalf of another/others. A request to withdraw will not be approved unless at least 30 (thirty) days would remain between the date of approval and the later of the expiration date of a time to file a response or the expiration date of the maximum time period which can be extended under 37 C.F.R. § 1.136(a).

The request cannot be approved because no reasons for withdrawal have been provided. The Office cannot, at this time, determine whether practitioner's request is one of the mandatory or permissive reasons enumerated in 37 CFR 10.40. Any subsequent requests must include reasons for withdrawal. Please note that there is a space provided for on PTO/SB/83 (Request to Withdraw as Attorney or Agent) to supply practitioner's reasons.

All future communications from the Office will continue to be directed to the above-listed address until otherwise notified by applicant.

Telephone inquiries concerning this decision should be directed to Terri Williams at 571-272- 2991.

T. Williams

Terri Williams
Petitions Examiner
Office of Petitions

cc: **King & Spalding, L.L.P.**
Todd Mattingly
1100 Louisiana Street, Suite 4000
Houston, TX 77002

UNITED STATES PATENT AND TRADEMARK OFFICE

Commissioner for Patents
United States Patent and Trademark Office
P.O. Box 1450
Alexandria, VA 22313-1450
www.uspto.go

Waters Investments Limited
c/o Waters Corporation
34 Maple Street - LG
Milford, MA 01757

COPY MAILED

SEP 28 2005

OFFICE OF PETITIONS

In re Application of
Izzo et al.
Application No. 11/072,907
Filed: March 4, 2005
Attorney Docket No. AF-299
For: CHROMATOGRAPHIC COLUMN AND METHODS FOR CONTROLLING SORBENT DENSITY

Decision According Status Under 37 CFR 1.47(a)

This is a decision on the petition under 37 CFR 1.47(a), filed June 23, 2005.

The petition is **granted**.

The above-identified application and papers have been reviewed and found in compliance with 37 CFR 1.47(a). This application is hereby accorded Rule 1.47(a) status.

As provided in Rule 1.47(c), this Office will forward notice of this application's filing to the non-signing inventor at the address given in the petition. Notice of the filing of this application will also be published in the Official Gazette.

The Office of Initial Patent Examination will be informed of the instant decision so that it may continue to prepare the application for examination.

Telephone inquiries regarding this communication should be directed to Petitions Attorney Steven Brantley at (571) 272-3203.

Charles Steven Brantley
Senior Petitions Attorney
Office of Petitions

UNITED STATES PATENT AND TRADEMARK OFFICE

Commissioner for Patents
United States Patent and Trademark Office
P.O. Box 1450
Alexandria, VA 22313-1450
www.uspto.gov

E I DU PONT DE NEMOURS AND COMPANY
LEGAL PATENT RECORDS CENTER
BARLEY MILL PLAZA 25/1128
4417 LANCASTER PIKE
WILMINGTON, DE 19805

COPY MAILED

SEP 17 2007

OFFICE OF PETITIONS

In re Application of :
Dionisi, et al. :
Application No.: 11/072,909 : ON PETITION
Filed: March 4, 2005 :
Attorney Docket No:CH2972USNA :

This is a decision on the petition under 37 CFR §1.137(b), August 31, 2007, to revive the above-identified application.

The petition is **dismissed.**

Any request for reconsideration of this decision must be submitted within TWO (2) MONTHS from the mail date of this decision. Extensions of time under 37 CFR 1.136(a) are permitted. The reconsideration request should include a cover letter entitled "Renewed Petition" under 37 CFR 1.137(b)."

This application became abandoned for failure file a proper response to the Notice of Allowance and Issue Fee Due mailed July 24, 2006, which set a statutory period for reply of three months from its mailing date. The application became abandoned on October 25, 2006. A Notice of Abandonment was mailed on May 11, 2007.

Effective December 1, 1997, the provisions of 37 CFR 1.137(b) now provide that where the delay in reply was unintentional, a petition may be filed to revive an abandoned application or a lapsed patent pursuant to 37 CFR 1.137(b). A grantable petition pursuant to 37 CFR 1.137(b) must be accompanied by:

(1) the required reply, unless previously filed. In a non-provisional application abandoned for failure to prosecute, the required reply may be met by the filing of a continuing application. In an application or patent, abandoned or lapsed for failure to pay the issue fee, or any portion thereof, the required reply must be the payment of the issue fee or any outstanding balance thereof.

(2) the petition fee as set forth in 37 CFR 1.17(m);

(3) a statement that the entire delay in filing the required reply from the due date for the reply until the filing of a grantable petition pursuant to 37 CFR 1.137(b) was unintentional. The Commissioner may require additional information where there is a question whether the delay was unintentional; and

(4) any terminal disclaimer (and fee set forth in 37 CFR 1.20(d)) required pursuant to 37 CFR 1.137(c).

The instant petition does not satisfy the requirement of item (1) above.

The petition was not accompanied by the complete Issue Fee Transmittal (Form PTOL-85B), or its equivalent. The renewed petition must be accompanied by a completed Issue Fee Transmittal Form in order to be considered grantable.

The issue fee and publication fee were received on August 31, 2007.

Further correspondence with respect to this matter should be addressed as follows:

By mail:

Mail Stop Petitions
Commissioner for Patents
United States Patent and Trademark Office
Box 1450
Alexandria, VA 22313-1450

By facsimile: (571) 273-8300
Attn: Office of Petitions

Telephone inquiries concerning this decision may be directed to the undersigned at (571) 272-3222.

Kenya A. McLaughlin
Petitions Attorney
Office of Petitions

UNITED STATES PATENT AND TRADEMARK OFFICE

Commissioner for Patents
United States Patent and Trademark Office
P.O. Box 1450
Alexandria, VA 22313-1450
www.uspto.gov

E I DU PONT DE NEMOURS AND
COMPANY
LEGAL PATENT RECORDS CENTER
BARLEY MILL PLAZA 25/1128
4417 LANCASTER PIKE
WILMINGTON DE 19805

COPY MAILED

DEC 1 0 2007

OFFICE OF PETITIONS

In re Application of

Dionisi, et al.

Application No. 11/072,909

Filed: March 4, 2005

Attorney Docket No. CH2972USNA

DECISION ON PETITION

This is a decision on the renewed petition under 37 CFR §1.137(b), November 15, 2007, to revive the above-identified application.

The renewed petition is **granted**.

This application became abandoned for failure to timely remit the issue fee of $1400.00 and publication fee of $300.00 as required by the Notice of Allowance and Issue Fee Due (the "Notice") mailed July 24, 2006. The Notice set forth a three (3) month statutory period for reply. No response was received within the allowable period. Accordingly, this application became abandoned on October 25, 2006. A Notice of Abandonment was mailed on May 11, 2007. A petition under 37 CFR 1.137(b) was filed on August 31, 2007, and dismissed by a decision mailed September 17, 2007.

The issue fee and publication fee were received on August 31, 2007. The duplicate payments made November 15, 2007, of the petition fee ($1540.00), issue fee ($1440.00), and publication fee ($300.00) will be refunded to deposit account 04-1928.

Form PTOL-85B, filed November 15, 2007, is noted and made of record.

The application is being directed to the Office of Patent Publications for further processing.

Telephone inquiries concerning this decision may be directed to the undersigned at (571) 272-3222.

Kenya A. McLaughlin
Petitions Attorney
Office of Petitions

UNITED STATES PATENT AND TRADEMARK OFFICE

P-28-08

Commissioner for Patents
United States Patent and Trademark Office
P.O. Box 1450
Alexandria, VA 22313-1450
www.uspto.gov

Patent No. : 7,338562
Ser. No. : 11/072,909
Inventor(s) : Dionisi Fabio Alessio Romano, et. al.
Issued : March 04,2008
Title : SUGAR CANE JUICE CLARIFICATION PROCESS
Docket No. : CH2972USNA

Re: Request for Certificate of Correction

Consideration has been given your request for the issuance of a certificate of correction for the above-identified patent under the provisions of Rule(s) 1.322 or 1.323.

Assignees' names and addresses (assignment data) printed in a patent, are based *solely* on information supplied in the appropriate space for identifying the assignment data, i.e., item 3 of the Issue Fee Transmittal Form PTOL-85B. Granting of a request under 37 CFR 3.81(b) is required to correct applicant's error providing ***incorrect or erroneous*** assignment data, *before* issuance of a Certificate of Correction, under 37 CFR 1.323 *(see Manual of Patent Examining Procedures (M.P.E.P) Chp.1400, sect. 1481).* This procedure is required *at any time after the issue fee is paid*, including after issuance of the patent.

In view of the foregoing, your request is hereby denied.

A request to correct the Assignee under 37 CFR 3.81(b) should include:

A. **the processing fee set forth in 37 CFR 1.117(h) (currently $130);**
B. a statement that the failure to include the correct assignee name on the PTOL-85B was inadvertent; and
C. a copy of the Notice of Recordation of Assignment Document, reflecting the reel and frame number where the assignment(s) is recorded and/or reflecting proof of *the date* the assignment was submitted for recordation.

In the Request, Applicant(s) may request that the file be forwarded to Certificates of Correction Branch, for issuance of a Certificate of Correction, if the Request is granted.

Any request under 37 CFR 3.81(b) should be directed to the following address or facsimile number:

By mail: Mail Stop PETITIONS
Commissioner for Patents
Post Office Box 1450
Alexandria, VA 22313-1450

By hand: Customer Service Window
Mail Stop Petitions
Randolph Building
401 Dulany Street
Alexandria, VA 22314
By fax: (703) 872-9306
ATTN: Office of Petitions

If a fee (currently $100) was previously submitted for consideration of a Request for Certificate of Correction, under CFR 1.323, to correct assignment data, , no additional fee is required.

Eva James
For Cecelia Newman
Decisions & Certificates
of Correction Branch
(703) **308-9390 ext. 124** or 105

Nancy S. Mayer
E.I.du Pont de Nemours and Company4417 Lancaster Pike
Wilmington, Delaware 19805

UNITED STATES PATENT AND TRADEMARK OFFICE

8-28-08

Commissioner for Patents
United States Patent and Trademark Office
P.O. Box 1450
Alexandria, VA 22313-1450
www.uspto.gov

Patent No. : 7,338562
Ser. No. : 11/072,909
Inventor(s) : Dionisi Fabio Alessio Romano, et. al.
Issued : March 04,2008
Title : SUGAR CANE JUICE CLARIFICATION PROCESS
Docket No. : CH2972USNA

Re: Request for Certificate of Correction

Consideration has been given your request for the issuance of a certificate of correction for the above-identified patent under the provisions of Rule(s) 1.322 or 1.323.

Assignees' names and addresses (assignment data) printed in a patent, are based *solely* on information supplied in the appropriate space for identifying the assignment data, i.e., item 3 of the Issue Fee Transmittal Form PTOL-85B. Granting of a request under 37 CFR 3.81(b) is required to correct applicant's error providing ***incorrect or erroneous*** assignment data, *before* issuance of a Certificate of Correction, under 37 CFR 1.323 *(see Manual of Patent Examining Procedures (M.P.E.P) Chp.1400, sect. 1481).* This procedure is required *at any time after the issue fee is paid*, including after issuance of the patent.

In view of the foregoing, your request is hereby denied.

A request to correct the Assignee under 37 CFR 3.81(b) should include:

A. **the processing fee set forth in 37 CFR 1.117(h) (currently $130);**
B. a statement that the failure to include the correct assignee name on the PTOL-85B was inadvertent; and
C. a copy of the Notice of Recordation of Assignment Document, reflecting the reel and frame number where the assignment(s) is recorded and/or reflecting proof of *the date* the assignment was submitted for recordation.

In the Request, Applicant(s) may request that the file be forwarded to Certificates of Correction Branch, for issuance of a Certificate of Correction, if the Request is granted.

Any request under 37 CFR 3.81(b) should be directed to the following address or facsimile number:

By mail: Mail Stop PETITIONS
Commissioner for Patents
Post Office Box 1450
Alexandria, VA 22313-1450

By hand: Customer Service Window
Mail Stop Petitions
Randolph Building
401 Dulany Street
Alexandria, VA 22314
By fax: (703) 872-9306
ATTN: Office of Petitions

If a fee (currently $100) was previously submitted for consideration of a Request for Certificate of Correction, under CFR 1.323, to correct assignment data, , no additional fee is required.

Eva James
For Cecelia Newman
Decisions & Certificates
of Correction Branch
(703) **308-9390 ext. 124** or 105

Nancy S. Mayer
E.I.du Pont de Nemours and Company4417 Lancaster Pike
Wilmington, Delaware 19805

UNITED STATES PATENT AND TRADEMARK OFFICE

UNITED STATES DEPARTMENT OF COMMERCE
United States Patent and Trademark Office
Address: COMMISSIONER FOR PATENTS
P.O. Box 1450
Alexandria, Virginia 22313-1450
www.uspto.gov

CHRISTIE, PARKER & HALE, LLP
PO BOX 7068
PASADENA, CA 91109-7068

Mail Date: 04/21/2010

Applicant	: Lutz Biedermann	: DECISION ON REQUEST FOR
Patent Number	: 7601166	: RECALCULATION of PATENT
Issue Date	: 10/13/2009	: TERM ADJUSTMENT IN VIEW
Appliction No	: 11/072,911	: OF WYETH AND NOTICE OF INTENT TO
Filed	: 03/04/2005	: ISSUE CERTIFICATE OF CORRECTION
		:

The Request for Recalculation is **GRANTED** to the extent indicated.

The patent term adjustment has been determined to be **0** days. The USPTO will *sua sponte* issue a certificate of correction reflecting the amount of PTA days determined by the recalculation.

Prior to the issuance of the certificate of correction, the USPTO will afford patentee an opportunity to be heard and request reconsideration. Accordingly, patentee has **one month or thirty (30) days**, whichever is longer, to file a request for reconsideration of this patent term adjustment calculation. See 35 U.S.C. 154(b)(3)(B)(ii) and 37 CFR 1.322(a)(4). No extensions of time will be granted under 37 CFR 1.136.

Patentee should use document code PET.OP if electronically filing a request for reconsideration of this patent term adjustment calculation. The patentee must also include the information required by 37 CFR 1.705(b)(2) and the fee required by 37 CFR 1.18(e). If patentee does not file a timely request for reconsideration of this patent term adjustment calculation including the information required by 37 CFR 1.705(b)(2) and the fee required by 37 CFR 1.18(e), the USPTO will issue a certificate of correction reflecting the PTA determination noted above.

Patentee should be aware that in order to preserve the right to review in the United States District Court for the District of Columbia of the USPTO patent term adjustment determination, patentee must ensure that he or she also take the steps required under 35 U.S.C. 154(b)(4)(A) in a timely manner. Nothing in the request for recalculation should be construed as providing an alternative time frame for commencing a civil action under 35 U.S.C. 154(b)(4)(A).

Any questions concerning this decision should be directed to the Office of Patent Legal Administration at 571-272-7702.

UNITED STATES PATENT AND TRADEMARK OFFICE

Commissioner for Patents
United States Patent and Trademark Office
P.O. Box 1450
Alexandria, VA 22313-1450
www.uspto.gov

DANA REWOLDT
GARST SEED COMPANY
2369 330TH STREET
PO BOX 500
SLATER IA 50244

COPY MAILED
JUL 0 7 2006
OFFICE OF PETITIONS

In re Application of :
McClure :
Application No. 11/072,933 : DECISION ON PETITION
Filed: March 4, 2005 :
Attorney Docket No. 70634USNP :

This is a decision on the petition filed June 29, 2006, requesting (1) under 37 CFR 1.313(c), withdrawal of this application from issue for consideration of an accompanying provisional RCE, (2) under 37 CFR 1.183, waiver of the rules that prohibit entry of the accompanying amendment filed under 37 CFR 1.312 as it was filed subsequent to payment of the issue fee, and (3) under 37 CFR 1.136(a) any necessary extension of time, which are collectively being treated as (1) a petition under 37 CFR 1.183 for waiver of 37 CFR 1.312, and (2) a petition under 37 CFR 1.136(a) for a two month extension of time.

The petition considered under 37 CFR §§ 1.183 and 1.136(a) is **Granted**.

Petitioner notes that the Notice of Allowability mailed February 9, 2006, required compliance with the biological deposit provisions of 37 CFR §§ 1.801-1.809, including a request for waiver of 37 CFR 1.312(a), to insert *inter alia*, the yet to be provided accession number and other information required by 37 CFR 1.809(d), and set a shortened but extendable statutory period of 3 three months for compliance. Petitioner asserts that while, *inter alia*, the accession number and some of the other necessary information was promptly supplied by the ATCC, and in turn, forwarded to the USPTO, in the form of a Rule 312 amendment to the specification and claims at the same time as the issue fee was paid on May 11, 2006, the USPTO was also informed that the viability statement required by 37 CFR 1.1.807(b) (which while not required to be supplied in the form of an amendment to the claims or the specification, must nevertheless be made of record) had not been made by the ATCC, and was not in fact made until June 19, 2006. Petitioner further points to his diligent efforts to comply with the outstanding requirement(s), that were thwarted by the ATCC due to circumstances beyond his control, and his two requests for advice and assistance from the USPTO as to how best to ensure timely compliance.

It is agreed that justice would be served by waiver of 37 CFR 1.312 such that the concurrently supplied supplement to the initial reply, which in the aggregate now contains the required viability statement, may be properly entered into the record. It is further agreed that as the final, complete and entire reply to the Notice of Allowability ("Notice") was not received by the USPTO until the 5th month after the mailing of the Noticey, that such constitutes a proper request for a two month extension of time under 37 CFR 1.136(a), and the applicable fee. Since the foregoing facially constitutes the full reply to the Notice, it is not necessary to consider the precautionary request for withdrawal of this application from issue, and as such, the RCE is likewise immaterial, and will not be further processed by the USPTO.

Fees totaling $850 ($400 for the § 1.183 petition and $450 for the extension of time) have been charged to deposit account no. 07-0190 as requested, and the previously charged RCE fee of $790 has been re-credited to the credit card.

This application is being referenced to the Office of Publications for issuance as a patent.

Any inquiries concerning this decision may be directed to the undersigned at (571) 272-3217.

Brian Hearn

Brian Hearn
Petitions Examiner
Office of Petitions

SPE RESPONSE FOR CERTIFICATE OF CORRECTION

Paper No.:

DATE : November 3, 2006

TO SPE OF : ART UNIT 2833

SUBJECT : Request for Certificate of Correction on Patent No.: 7,083,448

A response is requested with respect to the accompanying request for a certificate of correction.

Please complete this form and return with file, within **7** days to:
Certificates of Correction Branch - PK 3-910
Palm location **7590** - Tel. No. 305-8201

With respect to the change(s) requested, correcting Office and/or Applicant's errors, should the patent read as shown in the certificate of correction? No new matter should be introduced, nor should the scope or meaning of the claims be changed.

Thank You For Your Assistance **Certificates of Correction Branch**

The request for issuing the above-identified correction(s) is hereby:
Note your decision on the appropriate box.

☐ **Approved** **All** changes apply.

☒ **Approved in Part** Specify below which changes **do not** apply.

☐ **Denied** State the reasons for denial below.

Comments:

The corrections to column 7, line 6 and column 8, line 18, are approved.
Corrections to column 7, line 11 and column 8, line 23, are not approved, because the text to be deleted in these lines is incomplete. The deleted portion for both lines 11 and 23 should be " , which is formed integrally with the engaging protrusion in a direction that opposes the insertion direction of the card".

SPE RESPONSE FOR CERTIFICATE OF CORRECTION

Paper No.: _____

DATE : September 20, 2006

TO SPE OF : ART UNIT 2833

SUBJECT : Request for Certificate of Correction for Appl. No.: 11/072934 Patent No.: 7,083,448 B2

Please respond to this request for a certificate of correction within 7 days.

Please review the requested changes/corrections as shown in the **COCIN** document(s) in the IFW application image. No new matter should be introduced, nor should the scope or meaning of the claims be changed.

Please complete the response (see below) and forward the completed response to scanning using document code **COCX**.

Elisha Evans
Certificates of Correction Branch

703-308-9390 ext. 110

Thank You For Your Assistance

The request for issuing the above-identified correction(s) is hereby:
Note your decision on the appropriate box.

- ☐ **Approved** — **All** changes apply.
- ☒ **Approved in Part** — Specify below which changes **do not** apply.
- ☐ **Denied** — State the reasons for denial below.

Comments: (SEE ATTACHED SHEET)

PAGE 1 OF 2

Paula Bradley — **SPE**

2833 — **Art Unit**

PTO/SB/44 (07-03)
Approved for use through 01/31/2004. OMB 0651-0033
U.S. Patent and Trademark Office; U.S. DEPARTMENT OF COMMERCE
Under the Paperwork Reduction Act of 1995, no persons are required to respond to a collection of information unless it displays a valid OMB control number.
(Also Form PTO-1050)

UNITED STATES PATENT AND TRADEMARK OFFICE
CERTIFICATE OF CORRECTION

PATENT NO. : 7,083,448 B2

DATED : August 1, 2006

INVENTOR(S) : Junichi Tanigawa

It is certified that error appears in the above-identified patent and that said Letters Patent is hereby corrected as shown below:

In column 7, line 6, after "inclined surface" delete ", which is formed integrally with the engaging protusion along the insertion direction of the card"

In column 7, line 11, after "flat surface" delete ", which is formed integrally with the engaging protusion in a direction of the card"

In column 8, line 18, after "inclined surface" delete ", which is formed integrally with the engaging protusion along the insertion direction of the card"

In column 8, line 23, after "flat surface" delete ", which is formed integrally with the engaging protusion in a direction of the card"

MAILING ADDRESS OF SENDER:

PTO Customer No. 29450
Barley Sndyer LLC
1000 Westlakes Drive, Suite 275, Berwyn, PA 19312

PATENT NO. 7,083,448 B2

No. of additional copies

This collection of information is required by 37 CFR 1.322, 1.323, and 1.324. The information is required to obtain or retain a benefit by the public which is to file (and by the USPTO to process) an application. Confidentiality is governed by 35 U.S.C. 122 and 37 CFR 1.14. This collection is estimated to take 1.0 hour to complete, including gathering, preparing, and submitting the completed application form to the USPTO. Time will vary depending upon the individual case. Any comments on the amount of time you require to complete this form and/or suggestions for reducing this burden, should be sent to the Chief Information Officer, U.S. Patent and Trademark Office, U.S. Department of Commerce, P.O. Box 1450, Alexandria, VA 22313-1450. DO NOT SEND FEES OR COMPLETED FORMS TO THIS ADDRESS. SEND TO: **Attention Certificate of Corrections Branch, Commissioner for Patents, P.O. Box 1450, Alexandria, VA 22313-1450.**

If you need assistance in completing the form, call 1-800-PTO-9199 and select option 2.

UNITED STATES PATENT AND TRADEMARK OFFICE

Commissioner for Patents
United States Patent and Trademark Office
P.O. Box 1450
Alexandria, VA 22313-1450
www.uspto.gov

NOV 9 2006

CROWELL & MORNING, LLP
INTELLECTUAL PROPERTY GROUP
P. O. BOX 14300
WASHINGTON, DC 20044-4300

In re Application of	:
Corina Sundermann	:
Serial No.: 11/072,962	: PETITION DECISION
Filed: March 7, 2005	:
Attorney Docket No.: 029310.52907	:

This is in response to the petition under 37 CFR 1.144, filed August 7, 2006, requesting withdrawal of an improper restriction requirement.

BACKGROUND

A review of the file history shows that this application was filed under 35 U.S.C. 111 on March 7, 2005, and contained claims 1-25. In a first Office action, mailed December 1, 2005, the examiner set forth a restriction requirement, as follows:

Group I – where R1 is aryl and R2 is aryl containing CO;
Group II – where R1 is aryl and R2 is het containing CO;
Group III – where R1 is aryl and R2 is cycloalkyl;
Group IV – where R1 is het and R2 is aryl containing CO;
Group V – where R1 is het and R2 is het containing CO; and
Group VI – where R1 is het and R2 is cycloalkyl.

The examiner stated that the R1 to R6 values covered a broad area of compounds and the number of provisos indicated that the art is very crowded.

Applicant replied on January 27, 2006, electing Group I with traverse, arguing that the examiner failed to follow M.P.E.P. 803.02.

On April 6, 2006, the examiner mailed an Office action to applicant acknowledging the election and revising the requirement by rejoining Groups I, II, IV and V, but maintaining Groups III and VI separate, noting that the proviso excluded compounds all fell into these two groups. The

examiner rejected claims 1-25 under 345 U.S.C. 112, second paragraph, as indefinite for containing the proviso compounds.

Applicants replied on August 7, 2006, arguing the rejection of record. Applicant al;so filed this petition.

DISCUSSION

Applicant's claims are directed to the compounds represented by formula I, as seen here:

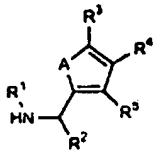

The core structure is a 2-methylamino thiophene wherein the methyl and amine groups may have an additional substituents and the thiophene ring may be substituted at each open position. The examiner based the initial restriction requirement on the values of R^1 and R^2.

Applicant argues that the thiophene ring with the methyl amine attached to it forms a core structure for all compounds claimed and has a specific utility as an analgesic and for other conditions. Applicant argues that the above structure forms a proper Markush groups and the provisions of M.P.E.P. 803.02 must be followed. Applicant's arguments are correct and the requirement must be withdrawn.

DECISION

The petition is **GRANTED.**

The restriction requirement within the Markush Group is withdrawn as improper.

The application will be forwarded to the examiner for consideration of applicant's reply filed August 7, 2006, and further action not inconsistent with this decision.

Should there be any questions about this decision please contact William R. Dixon, Jr., by letter addressed to Director, TC 1600, at the address listed above, or by telephone at 571-272-0519 or by facsimile sent to the general Office facsimile number, 571-273-8300.

George C. Elliott

George C. Elliott.
Director, Technology Center 1600

UNITED STATES PATENT AND TRADEMARK OFFICE

Commissioner for Patents
United States Patent and Trademark Office
P.O. Box 1450
Alexandria, VA 22313-1450
www.uspto.gov

FISH & RICHARDSON P.C.
P.O. BOX 1022
MINNEAPOLIS MN 55440-1022

COPY MAILED

JUN 23 2009

OFFICE OF PETITIONS

In re Application of :
Norihisa MATSUMOTO et al. :
Application No. 11/072,966 : DECISION ON PETITION
Filed: March 03, 2005 :
Attorney Docket No. **23697-006001 / NF-2796** :

This is a decision on the petition under the unintentional provisions of 37 CFR 1.137(b), filed May 01, 2009, to revive the above-identified application.

The petition is **DISMISSED**.

Any request for reconsideration of this decision must be submitted within TWO (2) MONTHS from the mail date of this decision. Extensions of time under 37 CFR 1.136(a) are permitted. The reconsideration request should include a cover letter entitled "Renewed Petition under 37 CFR 1.137(b)." This is **not** a final agency action within the meaning of 5 U.S.C. § 704.

The application became abandoned for failure to reply in a timely manner to the non-final Office action mailed, May 03, 2005, which set a shortened statutory period for reply of three (3) months. No extensions of time under the provisions of 37 CFR 1.136(a) were obtained. Accordingly, the application became abandoned on August 04, 2005.

A grantable petition under 37 CFR 1.137(b) must be accompanied by: (1) the required reply, unless previously filed; (2) the petition fee as set forth in 37 CFR 1.17(m); (3) a statement that the entire delay in filing the required reply from the due date for the reply until the filing of a grantable petition pursuant to 37 CFR 1.137(b) was unintentional; and (4) any terminal disclaimer (and fee as set forth in 37 CFR 1.20(d)) required by

37 CFR 1.137(d). Where there is a question as to whether either the abandonment or the delay in filing a petition under 37 CFR 1.137 was unintentional, the Director may require additional information. *See* MPEP 711.03(c)(II)(C) and (D). The instant petition lacks item (3).

There are three periods to be considered during the evaluation of a petition under 37 CFR 1.137(b):

(1) the delay in reply that originally resulted in the abandonment;

(2) the delay in filing an initial petition pursuant to 37 CFR 1.137(b) to revive the application; and

(3) the delay in filing a grantable petition pursuant to 37 CFR 1.137(b) to revive the application.

The declaration of Takeo Noguchi has been reviewed.

However, the delay has not been shown to the satisfaction of the Director to be unintentional for periods (1) and (2).

As to Period (1):

The patent statute at 35 U.S.C. § 41(a)(7) authorizes the Director to revive an "unintentionally abandoned application." The legislative history of Public Law 97-247 reveals that the purpose of 35 U.S.C. § 41(a)(7) is to permit the Office to have more discretion than in 35 U.S.C. §§ 133 or 151 to revive abandoned applications in appropriate circumstances, but places a limit on this discretion, stating that "[u]nder this section a petition accompanied by either a fee of $500 or a fee of $50 **would not be granted where the abandonment** or the failure to pay the fee for issuing the patent **was intentional** as opposed to being unintentional or unavoidable." [emphasis added]. See H.R. Rep. No. 542, 97th Cong., 2d Sess. 6-7 (1982), *reprinted in* 1982 U.S.C.C.A.N. 770-71. The revival of an intentionally abandoned application is antithetical to the meaning and intent of the statute and regulation.

35 U.S.C. § 41(a)(7) authorizes the Director to accept a petition "for the revival of an unintentionally abandoned application for a patent." As amended December 1, 1997, 37 CFR 1.137(b)(3) provides that a petition under 37 CFR 1.137(b) must be accompanied by a statement that the delay was unintentional, but provides that "[t]he Commissioner may require additional information where there is a question whether the delay was

unintentional." Where, as here, there is a question whether the initial delay was unintentional, the petitioner must meet the burden of establishing that the delay was unintentional within the meaning of 35 U.S.C. § 41(a)(7) and 37 CFR 1.137(b). *See* In re Application of G, 11 USPQ2d 1378, 1380 (Comm'r Pats. 1989); 37 CFR 1.137(b). Here, in view of the inordinate delay (over 3 years) in resuming prosecution, there is a question whether the entire delay was unintentional. Petitioner should note that the issue is not whether some of the delay was unintentional by any party; rather, the issue is whether the entire delay has been shown to the satisfaction of the Director to be unintentional.

The question under 37 CFR 1.137(b) for period (1) is whether the delay on the part of the party having the right or authority to reply to avoid abandonment (or not reply) was unintentional. Accordingly, any renewed petition must clearly identify the party having the right to reply to avoid abandonment on August 05, 2005. That party, in turn must explain what effort(s) was made to further reply to the outstanding Office action and, further, why no reply was filed. If no effort was made to further reply, then that party must explain why the delay in this application does not result from a deliberate course of action (or inaction). Likewise, as Everest Intellectual Property Law Group was counsel of record at the time of abandonment, the attorneys should explain why this application became abandoned while it was under their control and what efforts the attorneys made to further reply of itself and with whom this matter was.

Copies of any correspondence relating to the filing, or to not filing a further reply to the outstanding Office action are required from responsible person(s), involved with this application at the time of abandonment. Statements are required from the responsible person(s) having firsthand knowledge of the circumstances surrounding the lack of a reply to the outstanding Office action. As the courts have made clear, it is pointless for the USPTO to revive a long abandoned application without an adequate showing that the delay did not result from a deliberate course of action. *See* Lawman Armor v. Simon, 2005 U.S. Dist. LEXIS 10843, 74 USPQ2d 1633 (DC EMich 2005); Field Hybrids, LLC v. Toyota Motor Corp., 2005 U.S. Dist. LEXIS 1159 (D. Minn Jan. 27, 2005); Lumenyte Int'l Corp. v. Cable Lite Corp., Nos. 96-1011, 96-1077, 1996 U.S. App. LEXIS 16400, 1996 WL 383927 (Fed. Cir. July 9, 1996) (unpublished) (patents held unenforceable due to a finding of inequitable conduct in submitting an inappropriate statement that the abandonment was unintentional).

As to Period (2):

Likewise, where the applicant deliberately chooses not to seek or persist in seeking the revival of an abandoned application, or where the applicant deliberately chooses to delay seeking the revival of an abandoned application, the resulting delay in seeking revival of the abandoned application cannot be considered as "unintentional" within the meaning of 37 CFR 1.137(b). *See* MPEP 711.03(c).

The language of both 35 U.S.C. § 41(a)(7) and 37 CFR 1.137(b) are clear and unambiguous, and, furthermore, without qualification. That is, the delay in filing the reply during prosecution, as well as in filing the petition seeking revival, must have been, without qualification, "unintentional" for the reply to now be accepted on petition. The Office requires that the entire delay be at least unintentional as a prerequisite to revival of an abandoned application to prevent abuse and injury to the public. *See* H.R. Rep. No. 542, 97th Cong., 2d Sess. 7 (1982), reprinted in 1982 U.S.C.C.A.N. 771 ("[i]n order to prevent abuse and injury to the public the Commissioner . . . could require applicants to act promptly after becoming aware of the abandonment"). The December 1997 change to 37 CFR 1.137 did not create any new right to overcome an intentional delay in seeking revival, or in renewing an attempt at seeking revival, of an abandoned application. *See* Changes to Patent Practice and Procedure; Final Rule Notice, 62 Fed. Reg. 53131, 53160 (October 10, 1997), 1203 Off. Gaz. Pat. Office 63, 87 (October 21, 1997), which clearly stated that any protracted delay (here, over 3 years) could trigger, as here, a request for additional information. As the courts have since made clear, a protracted delay in seeking revival, as here, requires a petitioner's detailed explanation seeking to excuse the delay as opposed to USPTO acceptance of a general allegation of unintentional delay. *See* Lawman Armor v. Simon, 2005 U.S. Dist. LEXIS 10843, 74 USPQ2d 1633, at 1637-8 (DC EMich 2005); Field Hybrids, LLC v. Toyota Motor Corp., 2005 U.S. Dist. LEXIS 1159 (D. Minn Jan. 27, 2005) at *21-*23. Statements are required from the responsible person(s) having firsthand knowledge of the circumstances surrounding the protracted delay, after the abandonment date, in seeking revival.

Any renewed petition may be addressed as follows:

By Mail: Mail Stop PETITION
Commissioner for Patents
P. O. Box 1450
Alexandria, VA 22313-1450

By hand: U. S. Patent and Trademark Office
Customer Service Window, Mail Stop Petitions

Randolph Building
401 Dulany Street
Alexandria, VA 22314

The centralized facsimile number is **(571) 273-8300.**

Correspondence regarding this decision may also be filed through the electronic filing system of the USPTO.

Telephone inquiries concerning this decision should be directed to Tredelle Jackson at (571) 272-2783.

Ramesh Krishnamurthy

Ramesh Krishnamurthy
Petitions Examiner
Office of Petitions

UNITED STATES PATENT AND TRADEMARK OFFICE

Commissioner for Patents
United States Patent and Trademark Office
P.O. Box 1450
Alexandria, VA 22313-1450
www.uspto.gov

FISH & RICHARDSON P.C.
P.O. BOX 1022
MINNEAPOLIS MN 55440-1022

COPY MAILED

SEP 23 2009

OFFICE OF PETITIONS

In re Application of :
Norihisa MATSUMOTO et al. :
Application No. 11/072,966 : DECISION ON PETITION
Filed: March 03, 2005 :
Attorney Docket No. **23697-006001 / NF-2796** :

This is a decision on the renewed petition under the unintentional provisions of 37 CFR 1.137(b), filed August 24, 2009, to revive the above-identified application.

The petition is **GRANTED**.

The application became abandoned for failure to reply in a timely manner to the non-final Office action mailed, May 03, 2005, which set a shortened statutory period for reply of three (3) months. No extensions of time under the provisions of 37 CFR 1.136(a) were obtained. Accordingly, the application became abandoned on August 04, 2005.

The petition satisfies the requirements of 37 CFR 1.137(b) in that petitioner has supplied (1) the reply in the form of an amendment, (2) the petition fee of $1620, and (3) a proper statement of unintentional delay. Accordingly, the reply to the non-final Office action of May 03, 2005 is accepted as having been unintentionally delayed.

37 CFR 1.137(b)(3) requires a statement that "the entire delay in filing the required reply from the due date for the reply until the filing of a grantable petition pursuant to 37 CFR 1.137(b) was unintentional." Since the statement appearing in the petition varies from the language required by 37 CFR 1.137(b)(3), the statement is being construed as the required statement. Petitioner must notify the Office if this is not a correct reading of the statement appearing in the petition.

It is not apparent whether the person signing the statement of unintentional delay was in a position to have firsthand or direct knowledge of the facts and circumstances of the delay at issue. Nevertheless, such statement is being treated as having been made as the result of a reasonable inquiry into the facts and circumstances of such delay. See 37 CFR 10.18(b) and Changes to Patent Practice and Procedure; Final Rule Notice, 62 Fed. Reg. 53131, 53178 (October 10, 1997), 1203 Off. Gaz. Pat. Office 63, 103 (October 21, 1997). In the event that

such an inquiry has not been made, petitioner must make such an inquiry. If such inquiry results in the discovery that it is not correct that the entire delay in filing the required reply from the due date for the reply until the filing of a grantable petition pursuant to 37 CFR 1.137(b) was unintentional, petitioner must notify the Office.

The application file does not indicate a change of address has been filed in this case, although the address given on the petition differs from the address of record. A change of address should be filed in this case in accordance with MPEP 601.03. A courtesy copy of this decision is being mailed to the address noted on the petition. However, until otherwise instructed, all future correspondence regarding this application will be mailed solely to the address of record.

Telephone inquiries concerning this decision should be directed to Tredelle Jackson at (571) 272-2783.
This application is being referred to Technology Center AU 3671 for appropriate action on the concurrently filed amendment.

Ramesh Krishnamurthy

Ramesh Krishnamurthy
Petitions Examiner
Office of Petitions

cc: **FISH & RICHARDSON P.C.**
1425 K. STREET, N.W.
11TH FLOOR
WASHINGTON DC 20005-3500

UNITED STATES PATENT AND TRADEMARK OFFICE

Commissioner for Patents
United States Patent and Trademark Office
P.O. Box 1450
Alexandria, VA 22313-1450
www.uspto.gov

BUHLER & ASSOCIATES PATENT LAW
SUITE 100
1101 CALIFORNIA AVE
CORONA CA 92881

COPY MAILED

SEP 29 2008

OFFICE OF PETITIONS

In re Application of

PARSLEY, Andrew J.
Application No. 11/072,968
Filed: March 04, 2005
Attorney Docket No. **AP01-02U**

DECISION ON PETITION
TO WITHDRAW
FROM RECORD

This is a decision on the Request to Withdraw as attorney or agent of record under 37 C.F.R. § 1.36(b), filed September 02, 2008.

The request is **APPROVED**.

A grantable request to withdraw as attorney/agent of record must be signed by every attorney/agent seeking to withdraw or contain a clear indication that one attorney is signing on behalf of another/others. The Office requires the practitioner(s) requesting withdrawal to certify that he, she, or they have: (1) given reasonable notice to the client, prior to the expiration of the response period, that the practitioner(s) intends to withdraw from employment; (2) delivered to the client or a duly authorized representative of the client all papers and property (including funds) to which the client is entitled; and (3) notified the client of any responses that may be due and the time frame within which the client must respond, pursuant 37 CFR 10.40(c).

The request was signed by Kirk Buhler, the sole attorney of record. Kirk Buhler has been withdrawn as attorney or agent of record. Applicant is reminded that there is no attorney of record at this time.

All future correspondence will be directed to the inventor Andrew Parsley at the address indicated below.

Telephone inquiries concerning this decision should be directed to Tredelle Jackson at 571-272-2783.

Tredelle D. Jackson
Paralegal Specialist
Office of Petitions

cc: **ANDREW J. PARSLEY**
P.O. BOX 2982
CORONA CA 92878

UNITED STATES PATENT AND TRADEMARK OFFICE

COMMISSIONER FOR PATENTS
UNITED STATES PATENT AND TRADEMARK OFFICE
P.O. BOX 1450
ALEXANDRIA, VA 22313-1450
www.uspto.gov

HUNTON & WILLIAMS LLP
INTELLECTUAL PROPERTY DEPARTMENT
1900 K STREET, N.W.
SUITE 1200
WASHINGTON DC 20006-1109

COPY MAILED
JUN 0 6 2006
OFFICE OF PETITIONS

Applicant: Trieu
Appl. No.: 11/072,971
Filing Date: March 7, 2005
Title: IN-SITU FORMABLE NUCLEUS PULPOSUS IMPLANT WITH WATER ABSORPTION AND SWELLING CAPABILITY
Attorney Docket No.: 64118.000123
Pub. No.: US 2005/0203206 A1
Pub. Date: September 15, 2005

This is a decision on the request for a corrected patent application publication under 37 CFR 1.221(b), received on October 12, 2005, for the above-identified application

The request is DISMISSED.

The instant request is that the application be republished because the front page of the patent application publication includes a material error in the foreign priority information as the application improperly includes a claim to application 09310664 (CN) filed March 12, 2004.

37 CFR 1.221 (b) is applicable "only when the Office makes a material mistake which is apparent from Office records.... Any request for a corrected publication or revised patent application publication other than provided as provided in paragraph (a) of this section must be filed within two months from the date of the patent application publication. This period is not extendable." A material mistake must affect the public's ability to appreciate the technical disclosure of the patent application publication, to determine the scope of the patent application publication, or to determine the scope of the provisional rights that an applicant may seek to enforce upon issuance of a patent. [1]

The improper inclusion of application 09310664 (CN) filed March 12, 2004, in the priority information on the front page of the published patent application is an Office error but it is not a material error, as required by 37 CFR 1.221(b). The error in the foreign priority claim is not a material mistake because it does not affect the public's ability to appreciate the technical disclosure of the patent application publication, to determine the scope of the patent application

[1] Changes to Implement Eighteen-Month Publication of Patent Applications, 65 FR 57023, 57038 (Sept. 20, 2000), 1239, Off. Gaz. Pat. Office Notices 63, 75 (Oct. 10, 2000) (final rule).

publication or to determine the scope of the provisional rights that an applicant may seek to enforce upon issuance of a patent. The specification and claims were accurately published, thus one can read and understand the content of the application. The error also does not affect the use of the patent application publication as a prior art reference, because the foreign priority date is not useable as a reference date.

On October 12, 2005, a Corrected Filing Receipt (copy enclosed) was mailed by the Office in response to Applicant's request.

The applicant is advised that a "request for republication of an application previously published" may be filed under 37 CFR 1.221 (a). Such a request for republication "must include a copy of the application compliance with the Office's electronic filing system requirements and be accompanied by the publication fee set forth in § 1.18 (d) and the processing fee set forth in § 1.17 (i)." If the request for republication does not comply with the electronic filing system requirements, the republication will not take place and the publication fee set forth in § 1.18 (d) will be refunded. The processing fee will be retained.

Any request for republication under 37 CFR 1.221(a), must be submitted via the EFS system and questions or request for reconsideration of the decision, should be addressed as follows:

By mail to: Mail Stop PGPUB
Commissioner for Patents
P.O. Box 1450
Alexandria, Va. 22313-1450

By facsimile: 571-273-8300

Inquiries relating to this matter may be directed to Mark Polutta at (571) 272-7709 (voice).

Mark Polutta
Senior Legal Advisor
Office of Patent Legal Administration
Office of the Deputy Commissioner
for Patent Examination Policy

Enclosure: Corrected Filing Receipt

UNITED STATES PATENT AND TRADEMARK OFFICE

UNITED STATES DEPARTMENT OF COMMERCE
United States Patent and Trademark Office
Address: COMMISSIONER FOR PATENTS
P.O. Box 1450
Alexandria, Virginia 22313-1450
www.uspto.gov

APPL NO.	FILING OR 371 (c) DATE	ART UNIT	FIL FEE REC'D	ATTY.DOCKET NO	DRAWINGS	TOT CLMS	IND CLMS
11/072,971	03/07/2005	3738	1600	64118.000123	3	32	2

CONFIRMATION NO. 7629

CORRECTED FILING RECEIPT

OC000000017228977

21967
HUNTON & WILLIAMS LLP
INTELLECTUAL PROPERTY DEPARTMENT
1900 K STREET, N.W.
SUITE 1200
WASHINGTON, DC 20006-1109

Date Mailed: 10/12/2005

Receipt is acknowledged of this regular Patent Application. It will be considered in its order and you will be notified as to the results of the examination. Be sure to provide the U.S. APPLICATION NUMBER, FILING DATE, NAME OF APPLICANT, and TITLE OF INVENTION when inquiring about this application. Fees transmitted by check or draft are subject to collection. Please verify the accuracy of the data presented on this receipt. **If an error is noted on this Filing Receipt, please mail to the Commissioner for Patents P.O. Box 1450 Alexandria Va 22313-1450. Please provide a copy of this Filing Receipt with the changes noted thereon. If you received a "Notice to File Missing Parts" for this application, please submit any corrections to this Filing Receipt with your reply to the Notice. When the USPTO processes the reply to the Notice, the USPTO will generate another Filing Receipt incorporating the requested corrections (if appropriate).**

Applicant(s)

Hai H. Trieu, Cordova, TN;

Assignment For Published Patent Application

SDGI HOLDINGS, INC.

Power of Attorney: The patent practitioners associated with Customer Number **21967**.

Domestic Priority data as claimed by applicant

Foreign Applications

If Required, Foreign Filing License Granted: 05/04/2005

The country code and number of your priority application, to be used for filing abroad under the Paris Convention, is US11/072,971

Projected Publication Date: Not Applicable

Non-Publication Request: No

Early Publication Request: No

Title

In-situ formable nucleus pulposus implant with water absorption and swelling capability

Preliminary Class

623

PROTECTING YOUR INVENTION OUTSIDE THE UNITED STATES

Since the rights granted by a U.S. patent extend only throughout the territory of the United States and have no effect in a foreign country, an inventor who wishes patent protection in another country must apply for a patent in a specific country or in regional patent offices. Applicants may wish to consider the filing of an international application under the Patent Cooperation Treaty (PCT). An international (PCT) application generally has the same effect as a regular national patent application in each PCT-member country. The PCT process **simplifies** the filing of patent applications on the same invention in member countries, but **does not result** in a grant of "an international patent" and does not eliminate the need of applicants to file additional documents and fees in countries where patent protection is desired.

Almost every country has its own patent law, and a person desiring a patent in a particular country must make an application for patent in that country in accordance with its particular laws. Since the laws of many countries differ in various respects from the patent law of the United States, applicants are advised to seek guidance from specific foreign countries to ensure that patent rights are not lost prematurely.

Applicants also are advised that in the case of inventions made in the United States, the Director of the USPTO must issue a license before applicants can apply for a patent in a foreign country. The filing of a U.S. patent application serves as a request for a foreign filing license. The application's filing receipt contains further information and guidance as to the status of applicant's license for foreign filing.

Applicants may wish to consult the USPTO booklet, "General Information Concerning Patents" (specifically, the section entitled "Treaties and Foreign Patents") for more information on timeframes and deadlines for filing foreign patent applications. The guide is available either by contacting the USPTO Contact Center at 800-786-9199, or it can be viewed on the USPTO website at http://www.uspto.gov/web/offices/pac/doc/general/index.html.

For information on preventing theft of your intellectual property (patents, trademarks and copyrights), you may wish to consult the U.S. Government website, http://www.stopfakes.gov. Part of a Department of Commerce initiative, this website includes self-help "toolkits" giving innovators guidance on how to protect intellectual property in specific countries such as China, Korea and Mexico. For questions regarding patent enforcement issues, applicants may call the U.S. Government hotline at 1-866-999-HALT (1-866-999-4158).

LICENSE FOR FOREIGN FILING UNDER
Title 35, United States Code, Section 184
Title 37, Code of Federal Regulations, 5.11 & 5.15

GRANTED

The applicant has been granted a license under 35 U.S.C. 184, if the phrase "IF REQUIRED, FOREIGN FILING LICENSE GRANTED" followed by a date appears on this form. Such licenses are issued in all applications where the conditions for issuance of a license have been met, regardless of whether or not a license may be required as set forth in 37 CFR 5.15. The scope and limitations of this license are set forth in 37 CFR 5.15(a) unless an earlier license has been issued under 37 CFR 5.15(b). The license is subject to revocation upon written notification. The date indicated is the effective date of the license, unless an earlier license of similar scope has been granted under 37 CFR 5.13 or 5.14.

This license is to be retained by the licensee and may be used at any time on or after the effective date thereof unless it is revoked. This license is automatically transferred to any related applications(s) filed under 37 CFR 1.53(d). This license is not retroactive.

The grant of a license does not in any way lessen the responsibility of a licensee for the security of the subject matter as imposed by any Government contract or the provisions of existing laws relating to espionage and the national security or the export of technical data. Licensees should apprise themselves of current regulations especially with respect to certain countries, of other agencies, particularly the Office of Defense Trade Controls, Department of State (with respect to Arms, Munitions and Implements of War (22 CFR 121-128)); the Bureau of Industry and Security, Department of Commerce (15 CFR parts 730-774); the Office of Foreign Assets Control, Department of Treasury (31 CFR Parts 500+) and the Department of Energy.

NOT GRANTED

No license under 35 U.S.C. 184 has been granted at this time, if the phrase "IF REQUIRED, FOREIGN FILING LICENSE GRANTED" DOES NOT appear on this form. Applicant may still petition for a license under 37 CFR 5.12, if a license is desired before the expiration of 6 months from the filing date of the application. If 6 months has lapsed from the filing date of this application and the licensee has not received any indication of a secrecy order under 35 U.S.C. 181, the licensee may foreign file the application pursuant to 37 CFR 5.15(b).

UNITED STATES PATENT AND TRADEMARK OFFICE

Commissioner for Patents
United States Patent and Trademark Office
P.O. Box 1450
Alexandria, VA 22313-1450
www.uspto.gov

ASHKAN NAJAFI, P.A.
6817 SOUTHPOINT PARKWAY
SUITE 2301
JACKSONVILLE FL 32216

MAILED

APR 09 2010

OFFICE OF PETITIONS

In re Application of	:	
George S. Andrew	:	
Application No. 11/072,975	:	DECISION ON PETITION
Filed: March 7, 2005	:	
Attorney Docket No. DLL1443	:	

This is a decision on the petition under the unintentional provisions of 37 CFR 1.137(b), filed February 4, 2010, to revive the above-identified application.

The petition is **GRANTED**.

This application became abandoned for failure to timely pay the issue fee and to submit Corrected Drawings on or before March 31, 2009, as required by the Notice of Allowance and Fee(s) Due mailed December 31, 2008. Accordingly, the date of abandonment of this application is April 1, 2009. A Notice of Abandonment was mailed April 29, 2009.

The petition satisfies the requirements of 37 CFR 1.137(b) in that petitioner has supplied (1) the reply in the form of payment of the issue fee of $755.00 and the submission of Corrected Drawings; (2) the petition fee of $810.00; and (3) a proper statement of unintentional delay.

Telephone inquiries concerning this decision should be directed to the undersigned at (571) 272-7751.

This application is being referred to the Office of Data Management for processing into a patent.

Joan Olszewski
Petitions Examiner
Office of Petitions

UNITED STATES PATENT AND TRADEMARK OFFICE

UNITED STATES DEPARTMENT OF COMMERCE
United States Patent and Trademark Office
Address: COMMISSIONER FOR PATENTS
P.O. Box 1450
Alexandria, Virginia 22313-1450
www.uspto.gov

Richard L. Byrne
WEBB ZIESENHEIM LOGSDON ORKIN & HANSON, P.C.
700 Koppers Building
436 Seventh Avenue
Pittsburgh, PA 15219-1818

Mail Date: 04/22/2010

Applicant	: Uk Kang	: DECISION ON REQUEST FOR
Patent Number	: 7635330	: RECALCULATION of PATENT
Issue Date	: 12/22/2009	: TERM ADJUSTMENT IN VIEW
Appliction No	: 11/072,995	: OF WYETH AND NOTICE OF INTENT TO
Filed	: 03/04/2005	: ISSUE CERTIFICATE OF CORRECTION
		:

The Request for Recalculation is **GRANTED** to the extent indicated.

The patent term adjustment has been determined to be **1182** days. The USPTO will *sua sponte* issue a certificate of correction reflecting the amount of PTA days determined by the recalculation.

Prior to the issuance of the certificate of correction, the USPTO will afford patentee an opportunity to be heard and request reconsideration. Accordingly, patentee has **one month or thirty (30) days**, whichever is longer, to file a request for reconsideration of this patent term adjustment calculation. See 35 U.S.C. 154(b)(3)(B)(ii) and 37 CFR 1.322(a)(4). No extensions of time will be granted under 37 CFR 1.136.

Patentee should use document code PET.OP if electronically filing a request for reconsideration of this patent term adjustment calculation. The patentee must also include the information required by 37 CFR 1.705(b)(2) and the fee required by 37 CFR 1.18(e). If patentee does not file a timely request for reconsideration of this patent term adjustment calculation including the information required by 37 CFR 1.705(b)(2) and the fee required by 37 CFR 1.18(e), the USPTO will issue a certificate of correction reflecting the PTA determination noted above.

Patentee should be aware that in order to preserve the right to review in the United States District Court for the District of Columbia of the USPTO patent term adjustment determination, patentee must ensure that he or she also take the steps required under 35 U.S.C. 154(b)(4)(A) in a timely manner. Nothing in the request for recalculation should be construed as providing an alternative time frame for commencing a civil action under 35 U.S.C. 154(b)(4)(A).

Any questions concerning this decision should be directed to the Office of Patent Legal Administration at 571-272-7702.

UNITED STATES PATENT AND TRADEMARK OFFICE

Commissioner for Patents
United States Patent and Trademark Office
P.O. Box 1450
Alexandria, VA 22313-1450
www.uspto.gov

STEVEN MAY
MOTOROLA, INC.
1303 EAST ALGONQUIN ROAD
IL01/3RD
SCHAUMBURG IL 60196

COPY MAILED
MAR 12 2010

In re Application of	:	
Eric J. Dunn et al.	:	
Application No. 11/073,006	:	DECISION ON PETITION
Filed: March 4, 2005	:	
Attorney Docket No. NN00002	:	

This is a decision on the petition, under 37 CFR 1.137(b) filed on December 22, 2009, to revive the above-identified application.

The petition is **GRANTED**.

This application became abandoned for failure to timely pay the issue and publication fees on or before August 12, 2009, as required by the Notice of Allowance and Fee(s) Due and the Notice of Allowability, mailed June 12, 2009. Accordingly, the date of abandonment of this application is August 13, 2009.

The petition satisfies the requirements of 37 CFR 1.137(b) in that petitioner has supplied (1) the reply in the form of payment of the issue fee of $ 1510, the publication fee of $300, (2) the petition fee of $1620, and (3) a proper statement of unintentional delay; and (4) any terminal disclaimer (and fee of $140 as set forth in 37 CFR 1.20(d)) required by 37 CFR 1.137(d).

In view of the above, authorization was given on December 22, 2009 to charge the issue fee of $1510; however, the small entity fee of $755 was mistakenly charged. Therein, the remaining balance of $755 will be charged to deposit account number 50-2117.

Further correspondence with respect to this matter should be addressed as follows:

By mail: Mail Stop Petition
Commissioner for Patents
P.O. Box 1450
Alexandria, VA 22313-1450

Application No. 11/073,006

By FAX: (571) 273-8300
Attn: Office of Petitions

By hand: Customer Service Window
Mail Stop Petition
Randolph Building
401 Dulany Street
Alexandria, VA 22314

Telephone inquiries concerning this decision should be directed to Tammara Peyton at (571) 272-6052 or in his absence to the undersigned at (571) 272-3217.

The Application is being referred to the Office of Data Management for further processing.

David Bucci
Petitions Examiner
Office of Petitions

UNITED STATES PATENT AND TRADEMARK OFFICE

COMMISSIONER FOR PATENTS
UNITED STATES PATENT AND TRADEMARK OFFICE
P.O. BOX 1450
ALEXANDRIA, VA 22313-1450
www.uspto.gov

COPY MAILED
FEB 02 2006
OFFICE OF PETITIONS

FOLEY & LARDNER
2029 CENTURY PARK EAST
SUITE 3500
LOS ANGELES, CA 90067

In re Application of	:
Yang	: DECISION GRANTING STATUS
Application No. 11/073,019	: UNDER 37 CFR 1.47(b)
Filed: March 4, 2005	:
Atty. Dkt. No.: 038209-0207	:
For: MOSFET AMPLIFIER HAVING	:
FEEDBACK CONTROLLED	:
TRANSCONDUCTANCE	:

This decision is in response to the petition under 37 CFR 1.47(b), filed October 28, 2005.

The petition is **GRANTED**.

Petitioner has shown that inventor T. Yang has refused to execute the declaration for the above-identified application after having been presented with the application papers.

The above-identified application and papers have been reviewed and found in compliance with 37 CFR 1.47(b). This application is hereby accorded Rule 1.47(b) status.

As provided in Rule 1.47(c), this Office will forward notice of this application's filing to the non-signing inventors at the addresses given in the petition. Notice of the filing of this application will also be published in the Official Gazette.

After this decision is mailed, the above-identified application will be returned to the Office of Initial Patent Examination for further processing.

Telephone inquiries regarding this decision should be directed to the undersigned at (571) 272-3205.

Alesia M. Brown
Petitions Attorney
Office of Petitions

UNITED STATES PATENT AND TRADEMARK OFFICE

Commissioner for Patents
United States Patent and Trademark Office
P.O. Box 1450
Alexandria, VA 22313-1450
www.uspto.gov

JJGJr : 11-07

COPY MAILED
DEC 1 0 2007
OFFICE OF PETITIONS

MACPHERSON KWOK
CHEN & HEID LLP
2033 GATEWAY PLACE
SUITE 400
SAN JOSE CA 95110

In re Application of	:	
Shiu, et al.	:	
Application No. 11/073,042	:	DECISION
Filed: 4 March, 2005	:	
Attorney Docket No. M-15616 US	:	

This is a decision on the petition filed on 13 August, 2007, and considered as a request to withdraw the holding of abandonment under 37 C.F.R. §1.181.

The petition as considered under 37 C.F.R. §1.181 is **DISMISSED**.

NOTES:

Any petition (and fee) for reconsideration of this decision must be submitted within two (2) months from the mail date of this decision.

Extensions of time under 37 C.F.R. §1.136(a) are permitted. The reconsideration request should include a cover letter entitled "Renewed Petition under 37 C.F.R. §1.181."

Thereafter, there will be no further reconsideration of this matter.[2]

---

2 For more than a century, punctuality and due diligence, equally with good faith, have been deemed essential requisites to the success of those who seek to obtain the special privileges of the patent law, and they are demanded in the interest of the public and for the protection of rival inventors. See: Porter v. Louden, 7 App.D.C. 64 (C.A.D.C. 1895), citing Wollensak v. Sargent, 151 U.S. 221, 228, 38 L. Ed. 137, 14 S. Ct. 291 (1894). An invention benefits no one unless it is made public, and the rule of diligence should be so applied as to encourage reasonable promptness in conferring this benefit upon the public. Automatic Electric Co. v. Dyson, 52 App. D.C. 82; 281 F. 586 (C.A.D.C. 1922). Generally, 35 U.S.C. §6; 37 C.F.R.§§1.181, 182, 183.

BACKGROUND

The record reflects that:

- Petitioner failed to reply timely and properly to the Notice of Allowance mailed on 6 April, 2007, with reply due on or before 6 July, 2007;
- the application went abandoned after midnight 6 July, 2007;
- the Office mailed the Notice of Abandonment 1 August, 2007;
- on 13 August, 2007, Petitioner filed the instant petition with, *inter alia*, an averment that the Office action in question (copy enclosed) had not been received by Counsel, however, while Petitioner made some of the showings/statements, as set forth in the guidance at the Commentary at MPEP §711.03(c), he apparently failed to provide the documentation of the items due on the due-date of the reply (see below).

The availability of applications and application papers online to applicants/practitioners who diligently associate their Customer Number with the respective application(s) now provides an applicant/practitioner on-demand information as to events/transactions in an application. Thus, now if one wishes to know the progress in and/or status of an application or the accuracy of the data therein, one need only look at the file online.

Out of an abundance of caution, Petitioners always are reminded that the filing of a petition under 37 C.F.R. §1.181 does not toll any periods that may be running any action by the Office and a petition seeking relief under the regulation must be filed within two (2) months of the act complained of (see: 37 C.F.R. §1.181(f)), and that those registered to practice and all others who make representations before the Office are reminded to inquire into the underlying facts of representations made to the Office and support averments with the appropriate documentation– since all owe to the Office the continuing duty to disclose.[2]

---

[2] See supplement of 17 June, 1999. The Patent and Trademark Office is relying on petitioner's duty of candor and good faith and accepting a statement made by Petitioner. See Changes to Patent Practice and Procedure, 62 Fed. Reg. at 53160 and 53178, 1203 Off. Gaz. Pat. Office at 88 and 103 (responses to comments 64 and 109)(applicant obligated under 37 C.F.R. §10.18 to inquire into the underlying facts and circumstances when providing statements to the Patent and Trademark Office).

Specifically, the regulations at 37 C.F.R. §10.18 provide:

§ 10.18 Signature and certificate for correspondence filed in the Patent and Trademark Office.
(a) For all documents filed in the Office in patent, trademark, and other non-patent matters, except for correspondence that is required to be signed by the applicant or party, each piece of correspondence filed by a practitioner in the Patent and Trademark Office must bear a signature by such practitioner complying with the provisions of §1.4(d), §1.4(e), or § 2.193(c)(1) of this chapter.
(b) By presenting to the Office (whether by signing, filing, submitting, or later advocating) any paper, the party presenting such paper, whether a practitioner or non-practitioner, is certifying that—
(1) All statements made therein of the party's own knowledge are true, all statements made therein on information and belief are believed to be true, and all statements made therein are made with the knowledge that whoever, in any matter within the jurisdiction of the Patent and Trademark Office, knowingly and willfully falsifies, conceals, or covers up by any trick, scheme, or device a material fact, or makes any

STATUTES, REGULATIONS AND ANALYSIS

Congress has authorized the Commissioner to "revive an application if the delay is shown to the satisfaction of the Commissioner to have been "unavoidable." 35 U.S.C. §133 (1994).[3]

The regulations at 37 C.F.R. §1.137(a) and (b) set forth the requirements for a petitioner to revive a previously unavoidably or unintentionally, respectively, abandoned application under this congressional grant of authority.

The language of 35 U.S.C. §133 and 37 C.F.R. §1.137(a) is clear, unambiguous, and without qualification: the delay in tendering the reply to the outstanding Office action, as well as filing the first petition seeking revival, must have been unavoidable for the reply now to be accepted on petition.[4]

Delays in responding properly raise the question whether delays are unavoidable.[4] Where there is a question whether the delay was unavoidable, Petitioners must meet the burden of

---

false, fictitious or fraudulent statements or representations, or makes or uses any false writing or document knowing the same to contain any false, fictitious or fraudulent statement or entry, shall be subject to the penalties set forth under 18 U.S.C. 1001, and that violations of this paragraph may jeopardize the validity of the application or document, or the validity or enforceability of any patent, trademark registration, or certificate resulting therefrom; and

(2) To the best of the party's knowledge, information and belief, formed after an inquiry reasonable under the circumstances, that —

(i) The paper is not being presented for any improper purpose, such as to harass someone or to cause unnecessary delay or needless increase in the cost of prosecution before the Office;

(ii) The claims and other legal contentions therein are warranted by existing law or by a nonfrivolous argument for the extension, modification, or reversal of existing law or the establishment of new law;

(iii) The allegations and other factual contentions have evidentiary support or, if specifically so identified, are likely to have evidentiary support after a reasonable opportunity for further investigation or discovery; and

(iv) The denials of factual contentions are warranted on the evidence, or if specifically so identified, are reasonably based on a lack of information or belief.

(c) Violations of paragraph (b)(1) of this section by a practitioner or non-practitioner may jeopardize the validity of the application or document, or the validity or enforceability of any patent, trademark registration, or certificate resulting therefrom. Violations of any of paragraphs (b)(2)(i) through (iv) of this section are, after notice and reasonable opportunity to respond, subject to such sanctions as deemed appropriate by the Commissioner, or the Commissioner's designee, which may include, but are not limited to, any combination of —

(1) Holding certain facts to have been established;

(2) Returning papers;

(3) Precluding a party from filing a paper, or presenting or contesting an issue;

(4) Imposing a monetary sanction;

(5) Requiring a terminal disclaimer for the period of the delay; or

(6) Terminating the proceedings in the Patent and Trademark Office.

(d) Any practitioner violating the provisions of this section may also be subject to disciplinary action. See § 10.23(c)(15).

[Added 50 FR 5175, Feb. 6, 1985, effective Mar. 8, 1985; para. (a) revised, 58 FR 54494, Oct. 22, 1993, effective Nov. 22, 1993; paras. (a) & (b) revised, paras. (c) & (d) added, 62 FR 53131, Oct. 10, 1997, effective Dec. 1, 1997; para. (a) revised, 69 FR 56481, Sept. 21, 2004, effective Oct. 21, 2004]

[3] 35 U.S.C. §133 provides:

35 U.S.C. §133 Time for prosecuting application.

Upon failure of the applicant to prosecute the application within six months after any action therein, of which notice has been given or mailed to the applicant, or within such shorter time, not less than thirty days, as fixed by the Commissioner in such action, the application shall be regarded as abandoned by the parties thereto, unless it be shown to the satisfaction of the Commissioner that such delay was unavoidable.

[4] See: *Changes to Patent Practice and Procedure*; *Final Rule Notice*, 62 *Fed. Reg.* at 53158-59 (October 10, 1997), 1203 *Off. Gaz. Pat. Office* at 86-87 (October 21, 1997).

establishing that the delay was unavoidable within the meaning of 35 U.S.C. §133 and 37 C.F.R. §1.137(a).[5]

And the Petitioner must be diligent in attending to the matter.[6] Failure to do so does not constitute the care required under Pratt, and so cannot satisfy the test for diligence and due care.

(By contrast, unintentional delays are those that do not satisfy the very strict statutory and regulatory requirements of unavoidable delay, and also, by definition, are not intentional.[7]))

Allegations as to the Request to
Withdraw the Holding of Abandonment

The courts have determined the construct for properly supporting a petition seeking withdrawal of a holding of abandonment.[8]

The commentary at MPEP §711.03(c) provides in pertinent part:

* * *

> **A. Petition To Withdraw Holding of Abandonment Based on Failure To Receive Office Action**
>
> In *Delgar v. Schulyer*, 172 USPQ 513 (D.D.C. 1971), the court decided that the Office should mail a new Notice of Allowance in view of the evidence presented in support of the contention that the applicant's representative did not receive the original Notice of Allowance. Under the reasoning of *Delgar*, an allegation that an Office action was never received may be considered in a petition to withdraw the holding of abandonment. If adequately supported, the Office may grant the petition to withdraw the holding of abandonment and remail the Office action. That is, the reasoning of *Delgar* is applicable regardless of whether an application is held abandoned for failure to timely pay the issue fee (35 U.S.C. 151) or for failure to prosecute (35 U.S.C. 133). To minimize costs and burdens to practitioners and the Office, the Office has modified the showing required to establish nonreceipt of an Office action. The showing required to establish

---

[5] See: In re Application of G, 11 USPQ2d 1378, 1380 (Comm'r Pats. 1989).

[6] See: Diligence in Filing Petitions to Revive and Petitions to Withdraw the Holding of Abandonment, 1124 Off. Gaz. Pat. Office 33 (March 19, 1991). It was and is Petitioner's burden to exercise diligence in seeking either to have the holding of abandonment withdrawn or the application revived. See 1124 Off. Gaz. Pat. Office supra.

[7] Therefore, by example, an unintentional delay in the reply might occur if the reply and transmittal form are to be prepared for shipment by the US Postal Service, but other pressing matters distract one's attention and the mail is not timely deposited for shipment.

[8] See: Delgar v. Schulyer, 172 USPQ 513 (D.D.C. 1971).

> nonreceipt of an Office communication must include a statement from the practitioner stating that the Office communication was not received by the practitioner and attesting to the fact that a search of the file jacket and docket records indicates that the Office communication was not received. A copy of the docket record where the nonreceived Office communication would have been entered had it been received and docketed must be attached to and referenced in practitioner's statement. ***For example, if a three month period for reply was set in the nonreceived Office action, a copy of the docket report showing all replies docketed for a date three months from the mail date of the nonreceived Office action must be submitted as documentary proof of nonreceipt of the Office action***.
>
> * **
>
> The showing outlined above may not be sufficient if there are circumstances that point to a conclusion that the Office action may have been lost after receipt rather than a conclusion that the Office action was lost in the mail (e.g., if the practitioner has a history of not receiving Office actions).
>
> Evidence of nonreceipt of an Office communication or action (e.g., Notice of Abandonment or an advisory action) other than that action to which reply was required to avoid abandonment would not warrant withdrawal of the holding of abandonment. Abandonment takes place by operation of law for failure to reply to an Office action or timely pay the issue fee, not by operation of the mailing of a Notice of Abandonment. See *Lorenz v. Finkl*, 333 F.2d 885, 889-90, 142 USPQ 26, 29-30 (CCPA 1964); *Krahn v. Commissioner*, 15 USPQ2d 1823, 1824 (E.D. Va 1990); *In re Application of Fischer*, 6 USPQ2d 1573, 1574 (Comm'r Pat. 1988). (Emphasis supplied.)
>
> * * *

And the regulation requires that relief be sought within two (2) months of the act complained of.

Petitioner appears not to have satisfied the burdens herein. ***(See from above (MPEP): "For example, if a three month period for reply was set in the nonreceived Office action, a copy of the docket report showing all replies docketed for a date three months from the mail date of the nonreceived Office action must be submitted as documentary proof of nonreceipt of the Office action.")***

CONCLUSION

Petitioner appears to have satisfied the burdens herein, and the petition as considered under 37 C.F.R. §1.181 is **dismissed**.

ALTERNATIVE VENUE

Petitioner may wish to properly file a petition to the Commissioner requesting revival of an application abandoned due to unintentional delay under 37 C.F.R. §1.137(b). (See: http://www.uspto.gov/web/offices/pac/mpep/documents/0700_711_03_c.htm#sect711.03c)[12]

A petition to revive on the grounds of unintentional delay must be filed promptly and such petition must be accompanied by the reply (the amendment), the petition fee, a terminal disclaimer and fee where appropriate and a statement that "the entire delay in filing the required reply from the due date for the reply until the filing of a grantable petition was unintentional." (The statement is in the form available online.)

Further correspondence with respect to this matter should be addressed as follows:[13]

By mail: Commissioner for Patents[14]
P.O. Box 1450
Alexandria, VA 22313-1450

By FAX: IFW Formal Filings
(571) 273-8300
ATTN.: Office of Petitions

By hand: Mail Stop: Petition
Customer Service Window
Randolph Building
401 Dulany Street
Alexandria, VA 22314

---

[12] See fee schedule: http://www.uspto.gov/main/howtofees.htm

[13] On July 15, 2005, the Central Facsimile (FAX) Number changed to (571) 273-8300. The old FAX number no longer is in service and (571) 273-8300 will be the only facsimile number recognized for centralized delivery. (For further information. see: http://www.uspto.gov/web/offices/pac/dapp/opla/preognotice/cfax062005.pdf .)

[14] To determine the appropriate addresses for other subject-specific correspondence, refer to the USPTO Web site at www.uspto.gov.

While telephone inquiries regarding this decision may be directed to the undersigned at (571) 272-3214, it is noted that all practice before the Office is in writing (see: 37 C.F.R. §1.2[9]) and the proper authority for action on any matter in this regard are the statutes (35 U.S.C.), regulations (37 C.F.R.) and the commentary on policy (MPEP). Therefore, no telephone discussion may be controlling or considered authority for Petitioner's action(s).

John J. Gillon, Jr.
Senior Attorney
Office of Petitions

---

[9] The regulations at 37 C.F.R. §1.2 provide:
§1.2 Business to be transacted in writing.
All business with the Patent and Trademark Office should be transacted in writing. The personal attendance of applicants or their attorneys or agents at the Patent and Trademark Office is unnecessary. The action of the Patent and Trademark Office will be based exclusively on the written record in the Office. No attention will be paid to any alleged oral promise, stipulation, or understanding in relation to which there is disagreement or doubt.

UNITED STATES PATENT AND TRADEMARK OFFICE

UNITED STATES DEPARTMENT OF COMMERCE
United States Patent and Trademark Office
Address: COMMISSIONER FOR PATENTS
P.O. Box 1450
Alexandria, Virginia 22313-1450
www.uspto.gov

NOTICE OF ALLOWANCE AND FEE(S) DUE

32605 7590 04/06/2007

MACPHERSON KWOK CHEN & HEID LLP
2033 GATEWAY PLACE
SUITE 400
SAN JOSE, CA 95110

EXAMINER
MEHMOOD, JENNIFER

ART UNIT	PAPER NUMBER
2612	

DATE MAILED: 04/06/2007

APPLICATION NO.	FILING DATE	FIRST NAMED INVENTOR	ATTORNEY DOCKET NO.	CONFIRMATION NO.
11/073,042	03/04/2005	Lihu M. Chiu	M-15616 US	7840

TITLE OF INVENTION: CAPACITIVE RFID TAG ENCODER

APPLN. TYPE	SMALL ENTITY	ISSUE FEE DUE	PUBLICATION FEE DUE	PREV. PAID ISSUE FEE	TOTAL FEE(S) DUE	DATE DUE
nonprovisional	NO	$1400	$300	$0	$1700	07/06/2007

THE APPLICATION IDENTIFIED ABOVE HAS BEEN EXAMINED AND IS ALLOWED FOR ISSUANCE AS A PATENT. PROSECUTION ON THE MERITS IS CLOSED. THIS NOTICE OF ALLOWANCE IS NOT A GRANT OF PATENT RIGHTS. THIS APPLICATION IS SUBJECT TO WITHDRAWAL FROM ISSUE AT THE INITIATIVE OF THE OFFICE OR UPON PETITION BY THE APPLICANT. SEE 37 CFR 1.313 AND MPEP 1308.

THE ISSUE FEE AND PUBLICATION FEE (IF REQUIRED) MUST BE PAID WITHIN THREE MONTHS FROM THE MAILING DATE OF THIS NOTICE OR THIS APPLICATION SHALL BE REGARDED AS ABANDONED. THIS STATUTORY PERIOD CANNOT BE EXTENDED. SEE 35 U.S.C. 151. THE ISSUE FEE DUE INDICATED ABOVE DOES NOT REFLECT A CREDIT FOR ANY PREVIOUSLY PAID ISSUE FEE IN THIS APPLICATION. IF AN ISSUE FEE HAS PREVIOUSLY BEEN PAID IN THIS APPLICATION (AS SHOWN ABOVE), THE RETURN OF PART B OF THIS FORM WILL BE CONSIDERED A REQUEST TO REAPPLY THE PREVIOUSLY PAID ISSUE FEE TOWARD THE ISSUE FEE NOW DUE.

HOW TO REPLY TO THIS NOTICE:

I. Review the SMALL ENTITY status shown above.

If the SMALL ENTITY is shown as YES, verify your current SMALL ENTITY status:

A. If the status is the same, pay the TOTAL FEE(S) DUE shown above.

B. If the status above is to be removed, check box 5b on Part B - Fee(s) Transmittal and pay the PUBLICATION FEE (if required) and twice the amount of the ISSUE FEE shown above, or

If the SMALL ENTITY is shown as NO:

A. Pay TOTAL FEE(S) DUE shown above, or

B. If applicant claimed SMALL ENTITY status before, or is now claiming SMALL ENTITY status, check box 5a on Part B - Fee(s) Transmittal and pay the PUBLICATION FEE (if required) and 1/2 the ISSUE FEE shown above.

II. PART B - FEE(S) TRANSMITTAL, or its equivalent, must be completed and returned to the United States Patent and Trademark Office (USPTO) with your ISSUE FEE and PUBLICATION FEE (if required). If you are charging the fee(s) to your deposit account, section "4b" of Part B - Fee(s) Transmittal should be completed and an extra copy of the form should be submitted. If an equivalent of Part B is filed, a request to reapply a previously paid issue fee must be clearly made, and delays in processing may occur due to the difficulty in recognizing the paper as an equivalent of Part B.

III. All communications regarding this application must give the application number. Please direct all communications prior to issuance to Mail Stop ISSUE FEE unless advised to the contrary.

IMPORTANT REMINDER: Utility patents issuing on applications filed on or after Dec. 12, 1980 may require payment of maintenance fees. It is patentee's responsibility to ensure timely payment of maintenance fees when due.

PTOL-85 (Rev. 07/06) Approved for use through 04/30/2007.

PART B - FEE(S) TRANSMITTAL

Complete and send this form, together with applicable fee(s), to: Mail **Mail Stop ISSUE FEE**
Commissioner for Patents
P.O. Box 1450
Alexandria, Virginia 22313-1450
or Fax (571)-273-2885

INSTRUCTIONS: This form should be used for transmitting the ISSUE FEE and PUBLICATION FEE (if required). Blocks 1 through 5 should be completed where appropriate. All further correspondence including the Patent, advance orders and notification of maintenance fees will be mailed to the current correspondence address as indicated unless corrected below or directed otherwise in Block 1, by (a) specifying a new correspondence address; and/or (b) indicating a separate "FEE ADDRESS" for maintenance fee notifications.

CURRENT CORRESPONDENCE ADDRESS (Note: Use Block 1 for any change of address)

32605 7590 04/06/2007

MACPHERSON KWOK CHEN & HEID LLP
2033 GATEWAY PLACE
SUITE 400
SAN JOSE, CA 95110

Note: A certificate of mailing can only be used for domestic mailings of the Fee(s) Transmittal. This certificate cannot be used for any other accompanying papers. Each additional paper, such as an assignment or formal drawing, must have its own certificate of mailing or transmission.

Certificate of Mailing or Transmission

I hereby certify that this Fee(s) Transmittal is being deposited with the United States Postal Service with sufficient postage for first class mail in an envelope addressed to the Mail Stop ISSUE FEE address above, or being facsimile transmitted to the USPTO (571) 273-2885, on the date indicated below.

(Depositor's name)

(Signature)

(Date)

APPLICATION NO.	FILING DATE	FIRST NAMED INVENTOR	ATTORNEY DOCKET NO.	CONFIRMATION NO.
11/073,042	03/04/2005	Lihu M. Chiu	M-15616 US	7840

TITLE OF INVENTION: CAPACITIVE RFID TAG ENCODER

APPLN. TYPE	SMALL ENTITY	ISSUE FEE DUE	PUBLICATION FEE DUE	PREV. PAID ISSUE FEE	TOTAL FEE(S) DUE	DATE DUE
nonprovisional	NO	$1400	$300	$0	$1700	07/06/2007

EXAMINER	ART UNIT	CLASS-SUBCLASS
MEHMOOD, JENNIFER	2612	340-572100

1. Change of correspondence address or indication of "Fee Address" (37 CFR 1.363).

☐ Change of correspondence address (or Change of Correspondence Address form PTO/SB/122) attached.

☐ "Fee Address" indication (or "Fee Address" Indication form PTO/SB/47; Rev 03-02 or more recent) attached. **Use of a Customer Number is required.**

2. For printing on the patent front page, list

(1) the names of up to 3 registered patent attorneys or agents OR, alternatively,

(2) the name of a single firm (having as a member a registered attorney or agent) and the names of up to 2 registered patent attorneys or agents. If no name is listed, no name will be printed.

1 _____

2 _____

3 _____

3. ASSIGNEE NAME AND RESIDENCE DATA TO BE PRINTED ON THE PATENT (print or type)

PLEASE NOTE: Unless an assignee is identified below, no assignee data will appear on the patent. If an assignee is identified below, the document has been filed for recordation as set forth in 37 CFR 3.11. Completion of this form is NOT a substitute for filing an assignment.

(A) NAME OF ASSIGNEE

(B) RESIDENCE: (CITY and STATE OR COUNTRY)

Please check the appropriate assignee category or categories (will not be printed on the patent) : ☐ Individual ☐ Corporation or other private group entity ☐ Government

4a. The following fee(s) are submitted:

☐ Issue Fee

☐ Publication Fee (No small entity discount permitted)

☐ Advance Order - # of Copies _____

4b. Payment of Fee(s): **(Please first reapply any previously paid issue fee shown above)**

☐ A check is enclosed.

☐ Payment by credit card. Form PTO-2038 is attached.

☐ The Director is hereby authorized to charge the required fee(s), any deficiency, or credit any overpayment, to Deposit Account Number _____ (enclose an extra copy of this form).

5. **Change in Entity Status** (from status indicated above)

☐ a. Applicant claims SMALL ENTITY status. See 37 CFR 1.27.

☐ b. Applicant is no longer claiming SMALL ENTITY status. See 37 CFR 1.27(g)(2).

NOTE: The Issue Fee and Publication Fee (if required) will not be accepted from anyone other than the applicant; a registered attorney or agent; or the assignee or other party in interest as shown by the records of the United States Patent and Trademark Office.

Authorized Signature _____ Date _____

Typed or printed name _____ Registration No. _____

This collection of information is required by 37 CFR 1.311. The information is required to obtain or retain a benefit by the public which is to file (and by the USPTO to process) an application. Confidentiality is governed by 35 U.S.C. 122 and 37 CFR 1.14. This collection is estimated to take 12 minutes to complete, including gathering, preparing, and submitting the completed application form to the USPTO. Time will vary depending upon the individual case. Any comments on the amount of time you require to complete this form and/or suggestions for reducing this burden, should be sent to the Chief Information Officer, U.S. Patent and Trademark Office, U.S. Department of Commerce, P.O. Box 1450, Alexandria, Virginia 22313-1450. DO NOT SEND FEES OR COMPLETED FORMS TO THIS ADDRESS. SEND TO: Commissioner for Patents, P.O. Box 1450, Alexandria, Virginia 22313-1450.

Under the Paperwork Reduction Act of 1995, no persons are required to respond to a collection of information unless it displays a valid OMB control number.

UNITED STATES PATENT AND TRADEMARK OFFICE

UNITED STATES DEPARTMENT OF COMMERCE
United States Patent and Trademark Office
Address: COMMISSIONER FOR PATENTS
P.O. Box 1450
Alexandria, Virginia 22313-1450
www.uspto.gov

APPLICATION NO.	FILING DATE	FIRST NAMED INVENTOR	ATTORNEY DOCKET NO.	CONFIRMATION NO.
11/073,042	03/04/2005	Lihu M. Chiu	M-15616 US	7840

32605 7590 04/06/2007

MACPHERSON KWOK CHEN & HEID LLP
2033 GATEWAY PLACE
SUITE 400
SAN JOSE, CA 95110

EXAMINER
MEHMOOD, JENNIFER

ART UNIT	PAPER NUMBER
2612	

DATE MAILED: 04/06/2007

Determination of Patent Term Adjustment under 35 U.S.C. 154 (b)
(application filed on or after May 29, 2000)

The Patent Term Adjustment to date is 223 day(s). If the issue fee is paid on the date that is three months after the mailing date of this notice and the patent issues on the Tuesday before the date that is 28 weeks (six and a half months) after the mailing date of this notice, the Patent Term Adjustment will be 223 day(s).

If a Continued Prosecution Application (CPA) was filed in the above-identified application, the filing date that determines Patent Term Adjustment is the filing date of the most recent CPA.

Applicant will be able to obtain more detailed information by accessing the Patent Application Information Retrieval (PAIR) WEB site (http://pair.uspto.gov).

Any questions regarding the Patent Term Extension or Adjustment determination should be directed to the Office of Patent Legal Administration at (571)-272-7702. Questions relating to issue and publication fee payments should be directed to the Customer Service Center of the Office of Patent Publication at 1-(888)-786-0101 or (571)-272-4200.

PTOL-85 (Rev. 07/06) Approved for use through 04/30/2007.

Notice of Allowability	Application No.	Applicant(s)	
	11/073,042	CHIU ET AL.	
	Examiner	Art Unit	
	Jennifer A. Mehmood	2612	

-- The MAILING DATE of this communication appears on the cover sheet with the correspondence address--

All claims being allowable, PROSECUTION ON THE MERITS IS (OR REMAINS) CLOSED in this application. If not included herewith (or previously mailed), a Notice of Allowance (PTOL-85) or other appropriate communication will be mailed in due course. **THIS NOTICE OF ALLOWABILITY IS NOT A GRANT OF PATENT RIGHTS.** This application is subject to withdrawal from issue at the initiative of the Office or upon petition by the applicant. See 37 CFR 1.313 and MPEP 1308.

1. ☒ This communication is responsive to *amendments filed March 15, 2007*.

2. ☒ The allowed claim(s) is/are *1, 4-10 and 13-15*.

3. ☐ Acknowledgment is made of a claim for foreign priority under 35 U.S.C. § 119(a)-(d) or (f).
   a) ☐ All b) ☐ Some* c) ☐ None of the:
      1. ☐ Certified copies of the priority documents have been received.
      2. ☐ Certified copies of the priority documents have been received in Application No. _____ .
      3. ☐ Copies of the certified copies of the priority documents have been received in this national stage application from the International Bureau (PCT Rule 17.2(a)).

   * Certified copies not received: _____.

Applicant has THREE MONTHS FROM THE "MAILING DATE" of this communication to file a reply complying with the requirements noted below. Failure to timely comply will result in ABANDONMENT of this application.
THIS THREE-MONTH PERIOD IS NOT EXTENDABLE.

4. ☐ A SUBSTITUTE OATH OR DECLARATION must be submitted. Note the attached EXAMINER'S AMENDMENT or NOTICE OF INFORMAL PATENT APPLICATION (PTO-152) which gives reason(s) why the oath or declaration is deficient.

5. ☐ CORRECTED DRAWINGS (as "replacement sheets") must be submitted.
   (a) ☐ including changes required by the Notice of Draftsperson's Patent Drawing Review (PTO-948) attached
      1) ☐ hereto or 2) ☐ to Paper No./Mail Date _____.
   (b) ☐ including changes required by the attached Examiner's Amendment / Comment or in the Office action of Paper No./Mail Date _____.

   Identifying indicia such as the application number (see 37 CFR 1.84(c)) should be written on the drawings in the front (not the back) of each sheet. Replacement sheet(s) should be labeled as such in the header according to 37 CFR 1.121(d).

6. ☐ DEPOSIT OF and/or INFORMATION about the deposit of BIOLOGICAL MATERIAL must be submitted. Note the attached Examiner's comment regarding REQUIREMENT FOR THE DEPOSIT OF BIOLOGICAL MATERIAL.

Attachment(s)

1. ☒ Notice of References Cited (PTO-892)
2. ☐ Notice of Draftperson's Patent Drawing Review (PTO-948)
3. ☐ Information Disclosure Statements (PTO/SB/08), Paper No./Mail Date _____.
4. ☐ Examiner's Comment Regarding Requirement for Deposit of Biological Material
5. ☐ Notice of Informal Patent Application
6. ☐ Interview Summary (PTO-413), Paper No./Mail Date _____ .
7. ☐ Examiner's Amendment/Comment
8. ☒ Examiner's Statement of Reasons for Allowance
9. ☐ Other _____.

Allowable Subject Matter

B.L. 1. Claims 1, 4-10 and 13-15 ~~13 and 14~~ are allowed.

The following is an examiner's statement of reasons for allowance: a system and method comprising a plurality of conductive elements is disclosed; an RFID tag imager operable to image an RFID tag to provide an image of antenna for the RFID tag; and a capacitive encoder adapted to select a first conductive element and a second conductive element from the plurality of conductive elements responsive to the image of the RFID tag antenna and to drive the first conductive element with a first RF signal and to drive the second conductive element with a second RF signal, wherein the second RF signal is out of phase with the first RF signal by a predetermined phase so as to capacitively excite the RFID tag. Moreover, the prior art indicates that this particular system and method is novel and has not been published or patented by other entities.

Any comments considered necessary by applicant must be submitted no later than the payment of the issue fee and, to avoid processing delays, should preferably accompany the issue fee. Such submissions should be clearly labeled "Comments on Statement of Reasons for Allowance."

Conclusion

2. The prior art made of record and not relied upon is considered pertinent to applicant's disclosure: Pettus (US 2005/0280504) and Geiszler et al. (US 6,611,199) discloses various methods of encoding an RFID tag.

3. Any inquiry concerning this communication or earlier communications from the examiner should be directed to Jennifer A Mehmood whose telephone number is (571) 272.2976. The examiner can normally be reached on M-F from 8:00am to 4:30pm.

If attempts to reach the examiner by telephone are unsuccessful, the examiner's supervisor, Mr. Daniel Wu, can be reached at (571) 272.2964. The fax phone number for the organization where this application or proceeding is assigned is (571) 273.8300. Information regarding the status of an application may be obtained from the Patent Application Information Retrieval (PAIR) system. Status information for published applications may be obtained from either Private PAIR or Public PAIR. Status information for unpublished applications is available through Private PAIR only. For more information about the PAIR system, see http://pair-direct.uspto.gov. Should you have questions on access to the Private PAIR system, contact the Electronic Business Center (EBC) at 866-217-9197 (toll-free).

Jennifer A. Mehmood
March 30, 2007

BENJAMIN C. LEE
PRIMARY EXAMINER

UNITED STATES PATENT AND TRADEMARK OFFICE

Commissioner for Patents
United States Patent and Trademark Office
P.O. Box 1450
Alexandria, VA 22313-1450
www.uspto.gov

JJGJr : 11-07

MACPHERSON KWOK
CHEN & HEID LLP
2033 GATEWAY PLACE
SUITE 400
SAN JOSE CA 95110

COPY MAILED
MAR 2 4 2008

In re Application of	:	
Shiu, et al.	:	
Application No. 11/073,042	:	DECISION
Filed: 4 March, 2005	:	
Attorney Docket No. M-15616 US	:	

This is a decision on the petition filed on 17 December, 2007, and considered as a request to withdraw the holding of abandonment under 37 C.F.R. §1.181.

The petition as considered under 37 C.F.R. §1.181 is **GRANTED**.

BACKGROUND

The record reflects that:

- Petitioner failed to reply timely and properly to the Notice of Allowance/Allowability and Fees Due mailed on 6 April, 2007, with reply due on or before 6 July, 2007;
- the application went abandoned after midnight 6 July, 2007;
- the Office mailed the Notice of Abandonment 1 August, 2007;
- on 13 August, 2007, Petitioner filed the original petition with, *inter alia*, an averment that the Office action in question had not been received by Counsel, however, while Petitioner made some of the showings/statements, as set forth in the guidance at the Commentary at

MPEP §711.03(c), he apparently failed to provide the documentation of the items due on the due-date of the reply—and the petition was dismissed on 10 December, 2007;

- the instant petition seeks to overcome these deficiencies, and provides a statement of search and copies of the application and date due/calendar dockets consistent with the guidance at the Commentary at MPEP §711.03(c)(I)(A) and (B) regarding non-receipt and timely filing, respectively.

The availability of applications and application papers online to applicants/practitioners who diligently associate their Customer Number with the respective application(s) now provides an applicant/practitioner on-demand information as to events/transactions in an application. Thus, now if one wishes to know the progress in and/or status of an application or the accuracy of the data therein, one need only look at the file online.

Out of an abundance of caution, Petitioners always are reminded that the filing of a petition under 37 C.F.R. §1.181 does not toll any periods that may be running any action by the Office and a petition seeking relief under the regulation must be filed within two (2) months of the act complained of (see: 37 C.F.R. §1.181(f)), and that those registered to practice and all others who make representations before the Office are reminded to inquire into the underlying facts of representations made to the Office and support averments with the appropriate documentation–since all owe to the Office the continuing duty to disclose.[2]

STATUTES, REGULATIONS AND ANALYSIS

Congress has authorized the Commissioner to "revive an application if the delay is shown to the satisfaction of the Commissioner to have been "unavoidable." 35 U.S.C. §133 (1994).[3]

The regulations at 37 C.F.R. §1.137(a) and (b) set forth the requirements for a petitioner to revive a previously unavoidably or unintentionally, respectively, abandoned application under this congressional grant of authority.

The language of 35 U.S.C. §133 and 37 C.F.R. §1.137(a) is clear, unambiguous, and without qualification: the delay in tendering the reply to the outstanding Office action, as well as filing

---

[2] See supplement of 17 June, 1999. The Patent and Trademark Office is relying on petitioner's duty of candor and good faith and accepting a statement made by Petitioner. See Changes to Patent Practice and Procedure, 62 Fed. Reg. at 53160 and 53178, 1203 Off. Gaz. Pat. Office at 88 and 103 (responses to comments 64 and 109)(applicant obligated under 37 C.F.R. §10.18 to inquire into the underlying facts and circumstances when providing statements to the Patent and Trademark Office).

[3] 35 U.S.C. §133 provides:
35 U.S.C. §133 Time for prosecuting application.
Upon failure of the applicant to prosecute the application within six months after any action therein, of which notice has been given or mailed to the applicant, or within such shorter time, not less than thirty days, as fixed by the Commissioner in such action, the application shall be regarded as abandoned by the parties thereto, unless it be shown to the satisfaction of the Commissioner that such delay was unavoidable.

the first petition seeking revival, must have been unavoidable for the reply now to be accepted on petition.[4]

Delays in responding properly raise the question whether delays are unavoidable.[4] Where there is a question whether the delay was unavoidable, Petitioners must meet the burden of establishing that the delay was unavoidable within the meaning of 35 U.S.C. §133 and 37 C.F.R. §1.137(a).[5]

And the Petitioner must be diligent in attending to the matter.[6] Failure to do so does not constitute the care required under Pratt, and so cannot satisfy the test for diligence and due care.

(By contrast, unintentional delays are those that do not satisfy the very strict statutory and regulatory requirements of unavoidable delay, and also, by definition, are not intentional.[7]))

Allegations as to the Request to
Withdraw the Holding of Abandonment

The courts have determined the construct for properly supporting a petition seeking withdrawal of a holding of abandonment.[8] (See: the commentary at MPEP §711.03(c)(I)(A) and (B) , as to non-receipt and timely filing, respectively.)

And the regulation requires that relief be sought within two (2) months of the act complained of.

Petitioner appears to have satisfied the burdens herein.

CONCLUSION

Petitioner appears to have satisfied the burdens herein, and the petition as considered under 37 C.F.R. §1.181 is **granted**, and the 1 August, 2007, Notice of Abandonment is **vacated**.

---

[4] See: *Changes to Patent Practice and Procedure*; *Final Rule Notice*, 62 *Fed. Reg.* at 53158-59 (October 10, 1997), 1203 *Off. Gaz. Pat. Office* at 86-87 (October 21, 1997).

[5] See: In re Application of G, 11 USPQ2d 1378, 1380 (Comm'r Pats. 1989).

[6] See: Diligence in Filing Petitions to Revive and Petitions to Withdraw the Holding of Abandonment, 1124 Off. Gaz. Pat. Office 33 (March 19, 1991). It was and is Petitioner's burden to exercise diligence in seeking either to have the holding of abandonment withdrawn or the application revived. See 1124 Off. Gaz. Pat. Office supra.

[7] Therefore, by example, an unintentional delay in the reply might occur if the reply and transmittal form are to be prepared for shipment by the US Postal Service, but other pressing matters distract one's attention and the mail is not timely deposited for shipment.

[8] See: Delgar v. Schulyer, 172 USPQ 513 (D.D.C. 1971).

The instant application is released to Publications Branch to be processed into a patent in due course.

Petitioner may find it beneficial to view Private PAIR within a fortnight of the instant decision to ensure that the revival has been acknowledged by the Publications Branch in response to this decision—and it is noted that all inquiries with regard to any failure of that change in status should be directed to the Publications Branch where that change of status must be effected.

While telephone inquiries regarding this decision may be directed to the undersigned at (571) 272-3214, it is noted that all practice before the Office is in writing (see: 37 C.F.R. §1.2[1]) and the proper authority for action on any matter in this regard are the statutes (35 U.S.C.), regulations (37 C.F.R.) and the commentary on policy (MPEP). Therefore, no telephone discussion may be controlling or considered authority for Petitioner's action(s).

John J. Gillon, Jr.
Senior Attorney
Office of Petitions

[1] The regulations at 37 C.F.R. §1.2 provide:

§1.2 Business to be transacted in writing.

All business with the Patent and Trademark Office should be transacted in writing. The personal attendance of applicants or their attorneys or agents at the Patent and Trademark Office is unnecessary. The action of the Patent and Trademark Office will be based exclusively on the written record in the Office. No attention will be paid to any alleged oral promise, stipulation, or understanding in relation to which there is disagreement or doubt.

UNITED STATES PATENT AND TRADEMARK OFFICE

Commissioner for Patents
United States Patent and Trademark Office
P.O. Box 1450
Alexandria, VA 22313-1450
www.uspto.gov

PERKINS COIE, LLP
PO BOX 1208
SEATTLE, WA 98111-1208

MAILED

APR 08 2010

OFFICE OF PETITIONS

In re Application of	:	
Mark W. Insley, et al.	:	
Application No. 11/073,045	:	DECISION GRANTING PETITION
Filed: March 4, 2005	:	UNDER 37 CFR 1.313(c)(2)
Attorney Docket No. 67272-8132.US01	:	

This is a decision on the petition under 37 CFR 1.313(c)(2), filed April 6, 2010, to withdraw the above-identified application from issue after payment of the issue fee.

The petition is **GRANTED**.

The above-identified application is withdrawn from issue for consideration of a submission under 37 CFR 1.114 (request for continued examination). *See* 37 CFR 1.313(c)(2).

Petitioner is advised that the issue fee paid on March 25, 2010 cannot be refunded. If, however, this application is again allowed, petitioner may request that it be applied towards the issue fee required by the new Notice of Allowance.[1]

Telephone inquiries regarding this decision should be directed to undersigned at (571) 272-1642. All other inquiries regarding the examination or status of this application should be directed to the Technology Center.

This application is being referred to Technology Center AU 2113 for processing of the request for continued examination under 37 CFR 1.114 and for consideration of the concurrently filed information disclosure statement.

/AMW/
April M. Wise
Petitions Examiner
Office of Petitions

---

[1] *The request to apply the issue fee to the new Notice may be satisfied by completing and returning the new Part B – Fee(s) Transmittal Form (along with any balance due at the time of submission). Petitioner is advised that the Issue Fee Transmittal Form must be completed and timely submitted to avoid abandonment of the application.*

UNITED STATES PATENT AND TRADEMARK OFFICE

Commissioner for Patents
United States Patent and Trademark Office
P.O. Box 1450
Alexandria, VA 22313-1450
www.uspto.gov

COPY MAILED

OCT 09 2008

OFFICE OF PETITIONS

QUALCOMM INCORPORATED
5775 MOREHOUSE DR.
SAN DIEGO, CA 92121

In re Application of	:	
Brian C. Banister, et. al.	:	
Application No. 11/073,049	:	DECISION ON PETITION
Filed: March 4, 2005	:	
Attorney Docket No. 040599	:	

This is a decision on the petition under the unintentional provisions of 37 CFR 1.137(b), filed August 7, 2008, to revive the above-identified application.

The petition is **GRANTED**.

This application became abandoned for failure to timely pay the issue and publication fees on or before August 2, 2008, as required by the Notice of Allowance and Fee(s) Due, mailed May 2, 2008. Accordingly, the date of abandonment of this application is August 3, 2008.

The petition satisfies the requirements of 37 CFR 1.137(b) in that petitioner has supplied (1) the reply in the form of payment of the issue fee of $1440 and the publication fee of $300, (2) the petition fee of $1540; and (3) a proper statement of unintentional delay.

Telephone inquiries concerning this decision should be directed to Denise Williams at (571) 272-8930.

This application is being referred to the Office of Data Management for processing into a patent.

Brian Brown
Petitions Examiner
Office of Petitions

UNITED STATES DEPARTMENT OF COMMERCE
Patent and Trademark Office
ASSISTANT SECRETARY OF COMMERCE AND
COMMISSIONER OF PATENTS AND TRADEMARKS
P.O. Box 1450
Alexandria, VA 22313-1450

January 12, 2009

Patent No.: 7,405,231 B2
Applicant : Birgit Bossenmaier, et al.
Issued : July 29, 2008
For : **OXIDIZED THIOETHER DERIVATIVES**

Re: Certificate of Correction Issued January 13, 2009 in Error

Consideration has been given to your request for the issuance of a certificate of correction for the above-identified patent under the provisions of Rules 1.322.

It is the practice to exclude words such as "A", "IMPROVED", "IMPROVEMENTS IN," "NEW", or "NOVEL" as the first word in the title of the invention. Therefore, no correction is in order here under Rule 1.322 or 1.323.

In view of the foregoing, the request to amend the title should have been denied. The correction to the title will be deleted and certificate of correction will be issued to reinstate the title to read -- **OXIDIZED THIOETHER DERIVATIVES** --.

Further correspondence concerning this matter should be filed and directed to Decisions and Certificates of Correction Branch.

Decisions and Certificates of Correction
Antonio Johnson
(703) 308-9390 ext. 111

HOFFMANN-LA ROCHE INC.
PATENT LAW DEPARTMENT
340 KINGSLAND STREET
NUTLEY NJ 07110

AJ/cbn

UNITED STATES PATENT AND TRADEMARK OFFICE

Commissioner for Patents
United States Patent and Trademark Office
P.O. Box 1450
Alexandria, VA 22313-1450
www.uspto.gov

WORLD HYDROGEN, INC.
ATTN: DR. JOHN O'M BOCKRIS
HAILE PLANTATION
10515 S.W. 55TH PLACE
GAINESVILLE, FL 32608

COPY MAILED

AUG 07 2008

OFFICE OF PETITIONS

In re Application of	:	
Burnard P. Bockris	:	
Application No. 11/073,076	:	DECISION ON PETITION
Filed: March 4, 2005	:	TO MAKE SPECIAL UNDER
Attorney Docket No. 1745-P0003	:	37 CFR 1.102(c)(1)
	:	

This is a decision on the petition under 37 CFR 1.102(c)(1), filed July 2, 2008, to make the above-identified application special based on applicant's age as set forth in M.P.E.P. § 708.02, Section IV.

The petition is **GRANTED**.

A grantable petition to make an application special under 37 CFR 1.102(c)(1) and MPEP § 708.02, Section IV: Applicant's Age must be accompanied by evidence showing that at least one of the applicants is 65 years of age, or more, such as a birth certificate or a statement by applicant. No fee is required

The instant petition includes a statement signed by applicant. Accordingly, the above-identified application has been accorded "special" status.

Telephone inquiries concerning this decision should be directed to undersigned at 571-272-1642.

All other inquiries concerning either the examination or status of the application should be directed to the Technology Center.

The application is being forwarded to the Technology Center Art Unit 1795 for action on the merits commensurate with this decision.

April M. Wise
Petitions Examiner
Office of Petitions

UNITED STATES PATENT AND TRADEMARK OFFICE

Commissioner for Patents
United States Patent and Trademark Office
P.O. Box 1450
Alexandria, VA 22313-1450
www.uspto.gov

ADVANTEDGE LAW GROUP , LLC
3301 N. UNIVERSITY AVE .
SUITE 200
PROVO UT 84604

COPY MAILED

APR 0 4 2008

OFFICE OF PETITIONS

In re Application of

WHITEHURST, Todd K. et al.
Application No. 11/073,078
Filed: March 04, 2005
Attorney Docket No. **3013-0021 (05-00712-04)**

DECISION ON PETITION
TO WITHDRAW
FROM RECORD

This is a decision on the Request to Withdraw as attorney or agent of record under 37 C.F.R. § 1.36(b), filed February 14, 2008.

The request is **NOT APPROVED**.

A grantable request to withdraw as attorney/agent of record must be signed by every attorney/agent seeking to withdraw or contain a clear indication that one attorney is signing on behalf of another/others. A request to withdraw will not be approved unless at least 30 (thirty) days would remain between the date of approval and the later of the expiration date of a time to file a response or the expiration date of the maximum time period which can be extended under 37 C.F.R. § 1.136(a).

The Office cannot approve the request at this time since the reasons provided do not meet any of the conditions under the mandatory or permissive categories enumerated in 37 CFR 10.40. Section 10.40 of Title 37 of the Code of Federal Regulation states, "[a] practitioner shall not withdraw from employment in a proceeding before the Office without permission from the Office[.]" More specifically, 37 CFR 10.40 states, "[i]f paragraph (b) of this section is not applicable, a practitioner may not request permission to withdraw in matter pending before the Office unless such request or such withdrawal is" for one the permissive reasons listed in 37 CFR 10.40(c). The reasons set forth in the request, ownership transfer, does not meet any of the conditions set forth in 37 CFR 10.40.

All future communications from the Office will continue to be directed to the above-listed address until otherwise notified by applicant.

Telephone inquiries concerning this decision should be directed to Tredelle Jackson at 571-272- 2783.

Tredelle D. Jackson
Petitions Examiner
Office of Petitions

UNITED STATES PATENT AND TRADEMARK OFFICE

COMMISSIONER FOR PATENTS
UNITED STATES PATENT AND TRADEMARK OFFICE
P.O. BOX 1450
ALEXANDRIA, VA 22313-1450
www.uspto.gov

MACPHERSON KWOK CHEN & HEID LLP
1762 TECHNOLOGY DRIVE, SUITE 226
SAN JOSE, CA 95110

COPY MAILED

JUL 25 2008

Applicant: Chiu
Appl. No.: 11/073,081
Filing Date: March 4, 2005
Title: METHOD AND SYSTEM FOR AIMING AN RFID READER
Attorney Docket: M-1571US
Pub. No.: US 2006/0208076 A1
Pub. Date: September 21, 2006

This is a decision on the request for a corrected patent application publication under 37 CFR 1.221(b), received on August 13, 2007, for the above-identified application.

The request is DISMISSED.

Applicant requests that the application be republished because the patent application publication contains a material error in paragraph [0025] of the publication wherein the numeral "28" appears as "2&".

37 CFR 1.221 (b) is applicable "only when the Office makes a material mistake which is apparent from Office records.... Any request for a corrected publication or revised patent application publication other than provided as provided in paragraph (a) of this section must be filed **within two months** from the date of the patent application publication. **This period is not extendable**." A material mistake must affect the public's ability to appreciate the technical disclosure of the patent application publication, to determine the scope of the patent application publication, or to determine the scope of the provisional rights that an applicant may seek to enforce upon issuance of a patent. [1]

The request for corrected publication, received on August 13, 2007, was not timely filed under 37 CFR 1.221(b).

Even if the petition had been timely received, the error in the specification does not affect the public's ability to appreciate the technical disclosure of the patent application publication, or determine the scope of the patent application publication or determine the scope of the provisional rights that an applicant may seek to enforce upon issuance of a patent.

---

[1] Changes to Implement Eighteen-Month Publication of Patent Applications, 65 FR 57023, 57038 (Sept. 20, 2000), 1239, Off. Gaz. Pat. Office Notices 63, 75 (Oct. 10, 2000) (final rule).

The applicant is advised that a "request for republication of an application previously published" may be filed under 37 CFR 1.221 (a). Such a request for republication "must include a copy of the application compliance with the Office's electronic filing system requirements and be accompanied by the publication fee set forth in § 1.18 (d) and the processing fee set forth in § 1.17 (i)." If the request for republication does not comply with the electronic filing system requirements, the republication will not take place and the publication fee set forth in § 1.18 (d) will be refunded. The processing fee will be retained.

Any request for republication under 37 CFR 1.221(a), must be submitted via the EFS system, as a "Pre-Grant Publication" and questions or request for reconsideration of the decision, should be addressed as follows:

By mail to: Mail Stop PGPUB
Commissioner for Patents
P.O. Box 1450
Alexandria, Va. 22313-1450

By facsimile: 571-273-8300

Inquiries relating to this matter may be directed to Mark Polutta at (571) 272-7709.

Mark Polutta
Senior Legal Advisor
Office of Patent Legal Administration
Office of the Deputy Commissioner
for Patent Examination Policy

UNITED STATES PATENT AND TRADEMARK OFFICE

COMMISSIONER FOR PATENTS
UNITED STATES PATENT AND TRADEMARK OFFICE
P.O. BOX 1450
ALEXANDRIA, VA 22313-1450
www.uspto.gov

BIOTECHNOLOGY LAW GROUP
C/O PORTFOLIOIP
P.O. BOX 52050
MINNEAPOLIS, MN 55402

COPY MAILED

APR 17 2006

OFFICE OF PETITIONS

In re Application of	:	
Norman C. Nelson et al	:	
Application No. 11/073,085	:	DECISION ON PETITION
Filed: March 4, 2005	:	TO WITHDRAW
Attorney Docket No. GP152-02.UT	:	FROM RECORD
	:	

This is a decision on the Request to Withdraw as attorney or agent of record under 37 C.F.R. § 1.36(b), filed July 5, 2005.

The request is **NOT APPROVED**.

A review of the file record indicates that Bruce D. Grant does not have power of attorney in this patent application. Accordingly, the request to withdraw under 37 C.F.R. § 1.36(b) is not applicable.

All future communications from the Office will continue to be directed to the above-listed address until otherwise notified by applicant.

Telephone inquires concerning this decision should be directed to Irvin Dingle at 571-272- 3210.

David Bucci
Petitions Examiner
Office of Petitions

cc: Gen-Probe Incorporated
10210 Genetic Center Drive
San Diego, CA 92121-4362

UNITED STATES PATENT AND TRADEMARK OFFICE

Commissioner for Patents
United States Patent and Trademark Office
P.O. Box 1450
Alexandria, VA 22313-1450
www.uspto.gov

FEB 2 6 2010

Baker Botts L.L.P
910 Louisiana Street, One Shell Plaza
HOUSTON, TX 77002

In re Application of	:
MCGREGOR et al.	: DECISION ON PETITION
Application No. 11/073,089	: TO REVIEW RESTRICTION
Filed: March 04, 2005	: REQUIREMENT
For: DOWNHOLE FORMATION	: UNDER 37 CFR 1.144
SAMPLING	:

This is in response to the petition filed on March 24, 2009, under 37 CFR § 1.144, requesting supervisory review of the requirement for restriction in the instant application.

The petition is **GRANTED**.

The instant application was originally filed with a total of 32 claims, three of which are independent claims. All of the claims are directed to a formation sampling system or method of sampling, and recite various features of the system and method in different combinations and with varying specificity. All the claims are drawn to a single disclosed embodiment of the invention.

A restriction requirement was mailed on March 23, 2007. The restriction requirement stated that the application contained claims directed to the following patentably distinct species: Species I, fig. 6; Species II, figs. 7, 21 and 22; Species III, fig. 8; Species IV, fig 9; Species V, fig. 10; Species VI, figs. 11-14; and Species VII, figs. 15A-H. The requirement also stated that no claims were generic.

Petitioner elected with traverse Species III, and requested reconsideration of the requirement filed on June 25, 2007. The requirement for restriction was made final by the examiner in an Office action mailed on April 2, 2008.

In as much as Petitioner's specification and claims are generic to a single disclosed embodiment of the formation sampling system, the requirement to elect between the groups of claims advanced by the examiner is in error. Therefor, the requirement for election of species was improper and is hereby withdrawn.

The application will be forwarded to the examiner for a prompt non-final action on all the pending claims and consideration of the response filed by Petitioner on December 11, 2009.

Telephone inquiries should be directed to David Bagnell at (571) 272-6999.

David L. Talbott
Director, Technology Center 3600
(571) 272-5150

db/lm: 1/21/10
LM

UNITED STATES PATENT AND TRADEMARK OFFICE

UNITED STATES DEPARTMENT OF COMMERCE
United States Patent and Trademark Office
Address: COMMISSIONER FOR PATENTS
P.O. Box 1450
Alexandria, Virginia 22313-1450
www.uspto.gov

FITCH EVEN TABIN & FLANNERY
120 SOUTH LASALLE STREET
SUITE 1600
CHICAGO, IL 60603-3406

Mail Date: 04/21/2010

Applicant	: Andrew Szabo	: DECISION ON REQUEST FOR
Patent Number	: 7574659	: RECALCULATION of PATENT
Issue Date	: 08/11/2009	: TERM ADJUSTMENT IN VIEW
Appliction No	: 11/073,090	: OF WYETH AND NOTICE OF INTENT TO
Filed	: 03/04/2005	: ISSUE CERTIFICATE OF CORRECTION
		:

The Request for Recalculation is **GRANTED** to the extent indicated.

The patent term adjustment has been determined to be **871** days. The USPTO will *sua sponte* issue a certificate of correction reflecting the amount of PTA days determined by the recalculation.

Prior to the issuance of the certificate of correction, the USPTO will afford patentee an opportunity to be heard and request reconsideration. Accordingly, patentee has **one month or thirty (30) days**, whichever is longer, to file a request for reconsideration of this patent term adjustment calculation. See 35 U.S.C. 154(b)(3)(B)(ii) and 37 CFR 1.322(a)(4). No extensions of time will be granted under 37 CFR 1.136.

Patentee should use document code PET.OP if electronically filing a request for reconsideration of this patent term adjustment calculation. The patentee must also include the information required by 37 CFR 1.705(b)(2) and the fee required by 37 CFR 1.18(e). If patentee does not file a timely request for reconsideration of this patent term adjustment calculation including the information required by 37 CFR 1.705(b)(2) and the fee required by 37 CFR 1.18(e), the USPTO will issue a certificate of correction reflecting the PTA determination noted above.

Patentee should be aware that in order to preserve the right to review in the United States District Court for the District of Columbia of the USPTO patent term adjustment determination, patentee must ensure that he or she also take the steps required under 35 U.S.C. 154(b)(4)(A) in a timely manner. Nothing in the request for recalculation should be construed as providing an alternative time frame for commencing a civil action under 35 U.S.C. 154(b)(4)(A).

Any questions concerning this decision should be directed to the Office of Patent Legal Administration at 571-272-7702.

UNITED STATES PATENT AND TRADEMARK OFFICE

Commissioner for Patents
United States Patent and Trademark Office
P.O. Box 1450
Alexandria, VA 22313-1450
www.uspto.gov

ROETZEL & ANDRESS
1375 EAST 9TH STREET
CLEVELAND OH 44114

COPY MAILED
MAY 0 9 2006
OFFICE OF PETITIONS

In re Application of	:	
Stolle et al.	:	
Application No. 11/073,107	:	ON PETITION
Filed: March 4, 2005	:	
Attorney Docket No. 109769.0050	:	

This is a decision on the petition under 37 CFR §1.102(d), filed March 30, 2006, to make the above-identified application special. The petition requests that the above-identified application be made special under the accelerated examination procedure set forth in M.P.E.P. § 708.02, Section II: Infringement.

The petition is **GRANTED.**

A grantable petition to make an application special under 37 CFR §1.102(d) and MPEP §708.02, Section II: Infringement, must be accompanied by the required fee pursuant to 37 CFR 1.17(h) and a statement by the applicant, assignee, or attorney/agent registered to practice before the office alleging:

(A) That there is an infringing device or product actually on the market or method in use;

(B) That a rigid comparison of the alleged infringing device, product, or method with the claims of the application has been made, and that, in his or her opinion, some of the claims are unquestionably infringed; and

(C) That he or she has made or caused to be made a careful and thorough search of the prior art or has a good knowledge of the pertinent prior art.

Applicant must provide one copy of each of the references deemed most closely related to the subject matter encompassed by the claims if said references are not already of record.

The petition complies with all the above stated requirements. Accordingly, the above-identified application has been accorded "special" status.

A petition fee of $130.00 is required. As authorized, the fee will be charged to petitioner's deposit account.

Telephone inquires concerning this decision should be directed to Petitions Examiner Liana Chase at (571) 272-3206. All other inquires concerning either the examination or status of the application should be directed to the Technology Center.

This matter is being referred to the Technology Center Art Unit 3634 for expedited prosecution.

David Buccl
Petitions Examiner
Office of Petitions

UNITED STATES PATENT AND TRADEMARK OFFICE

Commissioner for Patents
United States Patent and Trademark Office
P.O. Box 1450
Alexandria, VA 22313-1450
www.uspto.gov

THOMPSON E. FEHR
5025 ADAMS AVENUE
SUITE 300
OGDEN UT 84403

COPY MAILED

JUL 01 2009

OFFICE OF PETITIONS

ON PETITION

In re Application of :
Jared Andrew Rea :
Application No. 11/073,108 :
Filed: March 4, 2005 :
Attorney Docket No. :

This is a decision on the petition under 37 CFR 1.137(b), filed May 1, 2009, to revive the above-identified application.

The petition is **GRANTED**.

This application became abandoned as a result of petitioner's failure to file an appeal brief (and fee required by 37 CFR 41.20(b)(2)) within the time period provided in 37 CFR 41.37(a)(1). As an appeal brief (and appeal brief fee) was not filed within two (2) months of the Notice of Appeal filed July 7, 2008, and no extensions of time under the provisions of 37 CFR 1.136(a) were obtained, the appeal was dismissed and the proceedings as to the rejected claims were terminated. See 37 CFR 1.197(b). As no claim was allowed, the application became abandoned on September 8, 2008. *See* MPEP 1215.04.

The petition satisfies the conditions for revival pursuant to the provisions of 37 CFR 1.137(b) in that (1) the reply in the form of an amendment, an Appeal Brief, and the $270 filing fee; (2) the petition fee of $810; and (3) the required statement of unintentional delay have been received. Accordingly, the reply to the Notice of Appeal of July 7, 2008 is accepted as having been unintentionally delayed.

Telephone inquiries concerning this decision should be directed to Ron Abelson at (571) 272-3165 or in his absence, the undersigned at (571) 272-7099.

The application file is being referred to Technology Center AU 3651 for appropriate action on the concurrently filed amendment and Appeal Brief.

David Bucci
Petitions Examiner
Office of Petitions

UNITED STATES PATENT AND TRADEMARK OFFICE

COMMISSIONER FOR PATENTS
UNITED STATES PATENT AND TRADEMARK OFFICE
P.O. BOX 1450
ALEXANDRIA, VA 22313-1450
www.uspto.gov

THOMAS M. FREIBURGER
P.O. BOX 1026
TIBURON, CA 94920

COPY MAILED

JUN 06 2007

OFFICE OF PETITIONS

In re Application of
Edward R. Hyde, Jr.
Application No. 11/073,125
Filed: March 4, 2005
Attorney Docket No. 726P

DECISION GRANTING PETITION
UNDER 37 CFR 1.137(b)

This is a decision on the petition, filed January 17, 2007, which is being treated as a petition under 37 CFR 1.137(b) to revive the instant nonprovisional application for failure to timely notify the U.S. Patent and Trademark (USPTO) of the filing of an application in a foreign country, or under a multinational treaty that requires publication of applications eighteen months after filing. *See* 37 CFR 1.137(f).

The petition is **GRANTED**.

Petitioner states that the instant nonprovisional application is the subject of an application filed in an eighteen month publication country on March 3, 2006. However, the USPTO was unintentionally not notified of this filing within 45 days subsequent to the filing of the subject application in an eighteen month publication country.

In view of the above, this application became abandoned pursuant to 35 U.S.C. §122(b)(2)(B)(iii) and 37 CFR 1.213(c) for failure to timely notify the Office of the filing of an application in a foreign country or under a multilateral international agreement that requires publication of applications 18 months after filing.

A petition to revive an application abandoned pursuant to 35 U.S.C. § 122(b)(2)(B)(iii) for failure to notify the USPTO of a foreign filing must be accompanied by:

(1) the required reply which is met by the notification of such filing in a foreign country or under a multinational treaty;
(2) the petition fee as set forth in 37 CFR 1.17(m); and
(3) a statement that the entire delay in filing the required reply from the due date of the reply until the filing of a grantable petition was unintentional.

The petition has been found to be in compliance with 37 CFR 1.137(b). Accordingly, the failure to timely notify the USPTO of a foreign or international filing within 45 days after the date of filing of such foreign or international application as provided by 35 U.S.C. § 122(b)(2)(B)(iii) and 37 CFR 1.213(c) is accepted as having been unintentionally delayed.

The previous Request and Certification under 35 U.S.C. § 122(b)(2)(B)(i) has been rescinded.

Any inquiries concerning this decision may be directed to the undersigned at (571) 272-3204.

It is noted that the present petition was filed by applicant; however, petitioner has appointed a representative to conduct all business before the U.S. Patent and Trademark Office (Office). The Office will not engage in dual correspondence with petitioner and petitioner's representative. Accordingly, petitioner must conduct all future correspondence with this Office through the representative of record. If petitioner no longer wishes to be represented by the representative of record, then a revocation of the power of attorney or patent agent should be submitted. A correspondence address must be included on the correspondence instructing the Office where all future communications are to be mailed. *See* 37 CFR 1.33(a).

This application is being referred to Technology Center Art Unit 3709 for examination in due course.

Sherry D. Brinkley
Petitions Examiner
Office of Petitions

UNITED STATES PATENT AND TRADEMARK OFFICE

Commissioner for Patents
United States Patent and Trademark Office
P.O. Box 1450
Alexandria, VA 22313-1450
www.uspto.gov

JJGJR.: 07-05

Paper No: __

FROMMER
LAWRENCE & HAUG
745 FIFTH AVENUE- 10TH FL.
NEW YORK NY 10151

COPY MAILED

JUL 1 5 2005

OFFICE OF PETITIONS

In re Application of
Narushima et al. :
Application No. 11/073,141 : DECISION ON PETITION
Filing Date: 4 March, 2005
Attorney Docket No. 450100-02829.2 :

This is a decision on the petition filed on 7 April, 2005, and considered under 37 C.F.R. §1.53, to obtain a filing date of 4 March, 2005, for Figs. 23 - 25 as described in the specification.

The petition is **DISMISSED**.

BACKGROUND

This nonprovisional application was deposited on 4 March, 2005.

On 29 March, 2005, the Office mailed a "Notice to File Corrected Application Papers," and indicated that, while a filing date had been granted, it appeared that Figs. 23 - 25 as described in the specification had been omitted from the application.

The Notice informed Petitioner of three alternative responses to the Notice: (a) to contend that the materials had been submitted, providing evidence thereof and a copy of the materials; (b) to submit the omitted materials and accept the date of submission as the date of the application; or (c) to ignore the Notice and accept the application as filed.

Petitioner actually elected to do none of the above, in that while he has submitted the petition and

fee he acknowledges that the Figs. 23 - 25 were omitted from the application as submitted.

However, Petitioner:

- filed the instant petition on 7 April, 2005, with copies of drawings alleged to be Figs. 23 - 25; and

- alleged that the omitted drawings "were in fact deposited in the U.S. Patent and Trademark Office in the parent application of Serial No. 09/706,116, and the transmittal of the instant continuation application * * * specifically incorporated those papers of the parent application by reference. Therefore, Applicants contend that there was no omission."

The inference from that statement by Petitioner is that the drawings (Figs. 23 - 25, as described in the specification) submitted with the petition constitute no new matter if included in the instant application.

Analysis

A search of the official file reveals that on 4 March, 2005, Petitioner deposited the instant application, and stated therein on the first page of the transmittal that this was a " . . . Continuation . . . of prior application No.: 09/706,116 . . ." and further that "[t]he entire disclosure of the prior application . . . is considered a part of the accompanying continuation or divisional application and is hereby incorporated by reference."

CONCLUSION

The petition is **dismissed**.

Petitioner asserts that the first paragraph of the specification states that the application is a divisional of prior application No.: 09/706,116 (pending as of the filing of the instant application, and that application was incorporated by reference. This incorporation may be proper in practice before the Office. (See: MPEP §201.06(c) (in pertinent part).)[1] As a matter of expediting

---

[1] The commentary at MPEP §201.06(c) provides in pertinent part:

* * *

INCORPORATION BY REFERENCE

* * *

In a continuation or divisional application, the safe-guard (petition and fee under former 37 C.F.R. 1.60(b)) concerning the filing of an application lacking all of the pages of the specification or sheets of drawings of the prior application has not been retained in 37 C.F.R. 1.53(b) since the specification and drawings of a continuation or divisional application are not limited to a reproduction or a "true copy" of the prior application. As a safeguard, however, an applicant may incorporate by reference the prior application by including, in the continuation or divisional application-as-filed, a statement that such specifically enumerated prior application or applications are "hereby incorporated herein by

prosecution, Petitioner may submit a copy of the parent application with a preliminary amendment and seek entry of that amendment by the Examiner.

No petition is required for that purpose.

Because the instant petition was not occasioned by an error of the Office, the fee will not be refunded.

This file (Image File Wrapper (IFW)) is released to OIPE for further processing as is necessary, consistent with this decision, before being forwarded for examination in due course.

Telephone inquiries concerning this decision may be directed to the undersigned at (571) 272-3214.

John J. Gillon, Jr.
Senior Attorney
Office of Petitions

---

reference." The statement may appear in the specification or in the application transmittal letter. The incorporation by reference statement can only be relied upon to permit the entering of a portion of the prior application into the continuation or divisional application when the portion of the prior application has been inadvertently omitted from the submitted application papers in the continuation or divisional application The inclusion of this incorporation by reference of the prior application(s) will permit an applicant to amend the continuation or divisional application to include any subject matter in such prior application(s), without the need for a petition provided the continuation or divisional application is entitled to a filing date notwithstanding the incorporation by reference. (Emphasis supplied.).

UNITED STATES PATENT AND TRADEMARK OFFICE

Commissioner for Patents
United States Patent and Trademark Office
P.O. Box 1450
Alexandria, VA 22313-1450
www.uspto.gov

INTEL/BLAKELY
12400 WILSHIRE BOULEVARD, SEVENTH FLOOR
LOS ANGELES CA 90025-1030

COPY MAILED

JUN 01 2005

OFFICE OF PETITIONS

In re Application of
Gingsburg et al.
Application No.11/073,143
Filed: March 4, 2005
Attorney Docket No. 42P14728D
Title of Invention: On-Die Reflectance Arrangements

DECISION GRANTING
PETITION UNDER 37 CFR 1.47(A)

This is in response to the petition under 37 CFR 1.47(a) filed March 4, 2005.

In accordance with 37 CFR 1.63(d), petitioner has submitted a copy of the executed oath or declaration filed in Application No. 10/448,408 filed May 30, 2003, of which the instant filing is a divisional application. Furthermore, a copy of the decision, mailed November 15, 2004, granting a petition to accord § 1.47(a) status to the prior application has been obtained and placed in the file of the present application.

As Rule 1.47(a) status was granted in the prior application, this application is hereby accorded Rule 1.47(a) status.

As provided in Rule 1.47(c), since notice was provided after the grant of Rule 1.47(a) status in the prior application, the Office is dispensing with the notice provision in this continuation application.

Pursuant to petitioner's request, deposit account 02-2666 will be charged the $200.00 petition fee.

Telephone inquiries regarding this communication should be directed to the undersigned at (571) 272-3215.

Charlema R. Grant
Petitions Attorney
Office of Petitions

UNITED STATES PATENT AND TRADEMARK OFFICE

UNITED STATES DEPARTMENT OF COMMERCE
United States Patent and Trademark Office
Address: COMMISSIONER FOR PATENTS
P.O. Box 1450
Alexandria, Virginia 22313-1450
www.uspto.gov

PERKINS COIE LLP/MSFT
P. O. BOX 1247
SEATTLE, WA 98111-1247

Mail Date: 04/20/2010

Applicant	: Yong Rui	: DECISION ON REQUEST FOR
Patent Number	: 7620552	: RECALCULATION of PATENT
Issue Date	: 11/17/2009	: TERM ADJUSTMENT IN VIEW
Appliction No	: 11/073,144	: OF WYETH AND NOTICE OF INTENT TO
Filed	: 03/04/2005	: ISSUE CERTIFICATE OF CORRECTION
		:

The Request for Recalculation is **GRANTED** to the extent indicated.

The patent term adjustment has been determined to be **1042** days. The USPTO will *sua sponte* issue a certificate of correction reflecting the amount of PTA days determined by the recalculation.

Prior to the issuance of the certificate of correction, the USPTO will afford patentee an opportunity to be heard and request reconsideration. Accordingly, patentee has **one month or thirty (30) days**, whichever is longer, to file a request for reconsideration of this patent term adjustment calculation. See 35 U.S.C. 154(b)(3)(B)(ii) and 37 CFR 1.322(a)(4). No extensions of time will be granted under 37 CFR 1.136.

Patentee should use document code PET.OP if electronically filing a request for reconsideration of this patent term adjustment calculation. The patentee must also include the information required by 37 CFR 1.705(b)(2) and the fee required by 37 CFR 1.18(e). If patentee does not file a timely request for reconsideration of this patent term adjustment calculation including the information required by 37 CFR 1.705(b)(2) and the fee required by 37 CFR 1.18(e), the USPTO will issue a certificate of correction reflecting the PTA determination noted above.

Patentee should be aware that in order to preserve the right to review in the United States District Court for the District of Columbia of the USPTO patent term adjustment determination, patentee must ensure that he or she also take the steps required under 35 U.S.C. 154(b)(4)(A) in a timely manner. Nothing in the request for recalculation should be construed as providing an alternative time frame for commencing a civil action under 35 U.S.C. 154(b)(4)(A).

Any questions concerning this decision should be directed to the Office of Patent Legal Administration at 571-272-7702.

UNITED STATES PATENT AND TRADEMARK OFFICE

Commissioner for Patents
United States Patent and Trademark Office
P.O. Box 1450
Alexandria, VA 22313-1450
www.uspto.gov

KENNETH A. RODDY
SUITE 100
2916 WEST T.C. JESTER BOULEVARD
HOUSTON, TX 77018

COPY MAILED

AUG 0 1 2006

OFFICE OF PETITIONS

In re Application of	:	
Todack, James J.	:	DECISION ON PETITION
Application No. 11/073,182	:	TO MAKE SPECIAL
Filed: March 4, 2005	:	37 CFR 1.102(c)
Title: APPARATUS AND METHOD FOR SHEARING REINFORCED CONCRETE PILES AND METAL PILES AND CRUSHING REINFORCED CONCRETE PILES	:	

This is a decision on the petition under 37 CFR 1.102(c)(2)(i), filed March 4, 2005, to make the above-identified application special based on the invention materially enhancing the quality of the environment as set forth in M.P.E.P. § 708.02, Section V.

The petition is **DISMISSED**.

A grantable petition to make an application special under 37 CFR 1.102(c)(2)(i) and MPEP § 708.02, Section V: Environmental Quality, must state that special status is sought because the invention materially enhances the quality of the environment by contributing to the restoration or maintenance of basic life-sustaining natural elements. If the disclosure is not clear on its face that the claimed invention materially enhances the quality of the environment by contributing to the restoration or maintenance of one of the basic life-sustaining natural elements, the petition must be accompanied by a statement by the applicant, assignee, or an attorney/agent registered to practice before the Office explaining how the materiality standard is met. No fee is required

The present invention fails to contribute to the restoration or maintenance of one of the basic life-sustaining natural elements, i.e. air, water, and soil. While petitioner explains how the present invention of shearing reinforced concrete piles provides an advantage in preserving marine life over the use of explosive materials for removing concrete piles, this does not meet the requirement of restoration or maintenance of one of the basic life sustaining natural elements. The environmental quality of the marine environment is neither improved nor restored by the use of the present invention. The standard does not allow an assertion of environmental contribution for the present invention only when compared to another more detrimental invention. The invention seeking special status should alone demonstrate how it contributes to environmental quality.

Further correspondence with respect to this matter should be addressed as follows:

By Mail: Mail Stop PETITION
Commissioner for Patents
P. O. Box 1450
Alexandria, VA 22313-1450

By hand: U. S. Patent and Trademark Office
Customer Service Window, Mail Stop Petitions
Randolph Building
401 Dulany Street
Alexandria, VA 22314

By FAX: (571) 273-8300

Telephone inquiries concerning this decision should be directed to Petitions Examiner Liana Chase at 571-272-3206. All other inquiries concerning either the examination or status of the application should be directed to the Technology Center.

This matter is being referred to the Technology Center Art Unit 3723 for action in its regular turn.

David Bucci
Petitions Examiner
Office of Petitions

UNITED STATES PATENT AND TRADEMARK OFFICE

Commissioner for Patents
United States Patent and Trademark Office
P.O. Box 1450
Alexandria, VA 22313-1450
www.uspto.gov

Charles E. Baxley, Esq.
90 John Street
Third Floor
New York, NY 10038

COPY MAILED
JUL 1 1 2006
OFFICE OF PETITIONS

In re Application of	:	
Wen-Lin Zhang, et al.	:	DECISION ON PETITION
Application No.: 11/073,194	:	
Filed: March 4, 2005	:	UNDER 37 CFR 1.137(b)
Attorney Docket No.: 15328 B (SW-971126)	:	

This is a decision on the petition under 37 CFR 1.137(b), filed March 9, 2006, to revive the above-identified application.

The petition is **GRANTED**.

The above-identified application became abandoned for failure to reply within the meaning of 37 CFR 1.113 in a timely manner to the "Notice to File Missing Parts of Non-Provisional Application" mailed April 12, 2005 which set a two month period for reply. No extensions of time under provisions of 37 CFR 1.136(a) were obtained. Accordingly, by operation of law, the above-identified application became abandoned on June 13, 2005.

The petition satisfies the conditions for revival pursuant to the provisions of 37 CFR 1.137(b) in that (1) the reply in the form of an executed declaration of the inventors and payment of the appropriate surcharge; (2) the petition fee and (3) the required statement of unintentional delay have been received. Accordingly, the reply to the Office action of April 12, 2005 is accepted as having been unintentionally delayed.

The application is being referred to Office of Initial Patent Examination (OIPE).

Telephone inquiries concerning this decision should be directed to the undersigned.

Derek A. Putonen
Attorney Advisor
(571) 272-3294

UNITED STATES PATENT AND TRADEMARK OFFICE

JAN 10 2008

Commissioner for Patents
United States Patent and Trademark Office
P.O. Box 1450
Alexandria, VA 22313-1450
www.uspto.gov

KING & SPALDING
1185 AVENUE OF THE AMERICAS
NEW YORK NY 10036-4003

In re Application of	:
Slaugenhaupt et al.	:
Serial No.: 11/073,203	: PETITION DECISION
Filed: March 4, 2005	:
Attorney Docket No.: 13572-105039US2	:

This is in response to the petition under 37 CFR 1.59(b), filed December 28, 2007, to expunge Information from the above identified application.

Petitioner requests that the letter submitted with the petition on December 28, 2007, be expunged from the record. Petitioner states either: (A) that the information contains trade secret material, proprietary material and/or material that is subject to a protective order which has not been made public; or (B) that the information submitted was unintentionally submitted and the failure to obtain its return would cause irreparable harm to the party who submitted the information or to the party in interest on whose behalf the information was submitted, and the information has not otherwise been made public. The petition fee set forth in 37 CFR 1.17(h) has been paid.

The information is described as a confidential communication to Dr. Gusella, one of the inventors of the above identified application, and relates to review of a proposed journal article related to the subject matter of the application. The material contained within the letter has been determined to have no bearing on the determination of patentability of this application. In view of this determination, expungement of the information is appropriate. The file entries for those documents have been closed and as such the documents are no longer publicly available, which is the IFW equivalent to removal of a paper document from a paper file wrapper.

Therefore, applicants' petition is **GRANTED**.

Should there be any questions with respect to this decision, please contact Marianne C. Seidek by mail addressed to: Director, Technology Center 1600, P.O. Box 1450, Alexandria, VA 22313-1450, or by telephone at 571-272-0584 or by facsimile transmission at general Office facsimile number.

Marianne C. Seidel
Quality Assurance Specialist/Program Manager
Technology Center 1600

UNITED STATES PATENT AND TRADEMARK OFFICE

Commissioner for Patents
United States Patent and Trademark Office
P.O. Box 1450
Alexandria, VA 22313-1450
www.uspto.gov

WORLD HYDROGEN, INC.
ATTN: DR. JOHN O'M BOCKRIS
HAILE PLANTATION
10515 S.W. 55TH PLACE
GAINESVILLE, FL 32608

COPY MAILED

SEP 1 5 2008

OFFICE OF PETITIONS

In re Application of	:	
Burnard P. BOCKRIS	:	
Application No. 11/073,231	:	DECISION ON PETITION
Filed: March 4, 2005	:	TO MAKE SPECIAL UNDER
Attorney Docket No. 1745-P0006	:	37 CFR 1.102(c)(1)
	:	

This is a decision on the petition under 37 CFR 1.102(c)(1), filed July 2, 2008, to make the above-identified application special based on applicant's age as set forth in M.P.E.P. § 708.02, Section IV.

The petition is **GRANTED**.

A grantable petition to make an application special under 37 CFR 1.102(c)(1) and MPEP § 708.02, Section IV: Applicant's Age must be accompanied by evidence showing that at least one of the applicants is 65 years of age, or more, such as a birth certificate or a statement by applicant. No fee is required

The instant petition includes a copy of applicant's driver license. Accordingly, the above-identified application has been accorded "special" status.

Telephone inquiries concerning this decision should be directed to the undersigned at 571-272-6735.

All other inquiries concerning either the examination or status of the application should be directed to the Technology Center.

The application is being forwarded to Technology Center Art Unit 1795 for action on the merits commensurate with this decision.

Diane Goodwyn
Petitions Examiner
Office of Petitions

UNITED STATES PATENT AND TRADEMARK OFFICE

Commissioner for Patents
United States Patent and Trademark Office
P.O. Box 1450
Alexandria, VA 22313-1450
www.uspto.gov

DOUGLAS T. JOHNSON
MILLER & MARTIN
1000 VOLUNTEER BUILDING
832 GEORGIA AVENUE
CHATTANOOGA, TN 37402-2289

COPY MAILED

SEP 21 2005

OFFICE OF PETITIONS

In re Application of
Russell Grove, Randall Wharton
and Nathan Brown
Application No. 11/073,273
Filed: March 4, 2005
Title: SCALABLE AUCTION
MANAGEMENT SYSTEM WITH
CENTRALIZED COMMERCE SERVICES

DECISION REFUSING STATUS
UNDER 37 CFR 1.47(a)

This is in response to the papers styled, "PETITION - Declaration Under 35 USC 118 and CFR 1.47(b) – Proof of Refusal To Sign Application Papers," filed September 1, 2005, which has been treated as a petition under 37 CFR 1.47(a).[1]

The petition is dismissed.

Rule 47 applicant is given TWO MONTHS from the mailing date of this decision to reply, correcting the below-noted deficiencies. Any reply should be entitled "Request for Reconsideration of Petition Under 37 CFR 1.47(a)," and should only address the deficiencies noted below, except that the reply may include an oath or declaration executed by the non-signing inventor. **FAILURE TO RESPOND WILL RESULT IN ABANDONMENT OF THE APPLICATION.** Any extensions of time will be governed by 37 CFR 1.136(a).

The above-identified application was filed on March 4, 2005 without an executed oath or declaration and naming Russell Grove, Randall Wharton and Nathan Brown as joint inventors.

[1] A petition under 37 CFR 1.47(b) is inappropriate in this instance since all but one of the inventors has signed the declaration. A petition under 37 CFR 1.47(b) is only appropriate where none of the inventors will sign, accordingly the petition will be treated as a petition under 37 CFR 1.47(a).

Petitioner has submitted $130.00 for the petition fee. However, as of November 22, 2004, the required fee has increased to $200.00 (37 CFR 1.17(g)). An additional $70.00 is required before the petition will be reviewed on the merits.

Further correspondence with respect to this matter should be addressed as follows:

By mail: Mail Stop Petition
Commissioner for Patents
Box 1450
Alexandria, VA 22313

By FAX: (571) 273-8300
Attn: Office of Petitions

By hand: Customer Service Window
Randolph Building
401 Dulany Street
Alexandria, VA 22314

Telephone inquiries related to this decision should be directed to the undersigned at (571) 272-3228.

Edward J. Tannouse
Petitions Attorney
Office of Petitions
Office of the Deputy Commissioner
for Patent Examination Policy

UNITED STATES PATENT AND TRADEMARK OFFICE

Commissioner for Patents
United States Patent and Trademark Office
P.O. Box 1450
Alexandria, VA 22313-1450
www.uspto.gov

DOUGLAS T. JOHNSON
MILLER & MARTIN
1000 VOLUNTEER BUILDING
832 GEORGIA AVENUE
CHATTANOOGA, TN 37402-2289

COPY MAILED

OCT 3 1 2005

OFFICE OF PETITIONS

In re Application of Russell Grove, Randall Wharton and Nathan Brown Application No. 11/073,273 Filed: March 4, 2005 Title: SCALABLE AUCTION MANAGEMENT SYSTEM WITH CENTRALIZED COMMERCE SERVICES	: : : : : : : :	DECISION REFUSING STATUS UNDER 37 CFR 1.47(a)

This is in response to the "Request For Reconsideration of Petition Under 37 CFR 1.47(a)," filed October 3, 2005.

The petition is dismissed.

Rule 47 applicant is given TWO MONTHS from the mailing date of this decision to reply, correcting the below-noted deficiencies. Any reply should be entitled "Request for Reconsideration of Petition Under 37 CFR 1.47(a)," and should only address the deficiencies noted below, except that the reply may include an oath or declaration executed by the non-signing inventor. **FAILURE TO RESPOND WILL RESULT IN ABANDONMENT OF THE APPLICATION.** Any extensions of time will be governed by 37 CFR 1.136(a).

The above-identified application was filed on March 4, 2005 without an executed oath or declaration and naming Russell Grove, Randall Wharton and Nathan Brown as joint inventors.

Accordingly, on March 30, 2005, a "Notice to File Missing Parts of Application" was mailed, requiring an executed oath or declaration and a surcharge for its late filing.

In response, on September 1, 2005 (Certificate of Mailing date: August 30, 2005), the original petition and a three (3) month extension of time were filed.

A grantable petition under 37 CFR 1.47(a) requires:

(1) proof that the non-signing inventor cannot be reached or refuses to sign the oath or declaration after having been presented with the application papers (specification, claims and drawings);

(2) an acceptable oath or declaration;

(3) the petition fee; and

(4) a statement of the last known address of the non-signing inventor.

Applicant lacks item (1), as set forth above.

As to item (1), applicant appears to demonstrate that the non-signing inventor was only presented with the declaration and power of attorney and an assignment. Unless the non-signing inventor was presented with a copy of the application papers (specification, claims and drawings), the non-signing inventor could not attest that he has "reviewed and understands the application papers" and therefore could not sign the declaration which he was given. Accordingly, Rule 47 applicant failed to show or provide proof that the inventor has refused to sign the declaration. See MPEP 409.03(d). Petitioner should show that a copy of the application papers was presented to the non-signing inventor, but that he did not respond to, or refused, the request that he sign the oath/declaration in order to show that the inventor has refused to join in the application. The proof of the pertinent events should be made by a statement of someone with first hand knowledge of the events.

Further correspondence with respect to this matter should be addressed as follows:

By mail: Mail Stop Petition
Commissioner for Patents
Box 1450
Alexandria, VA 22313

By FAX: (571) 273-8300
Attn: Office of Petitions

By hand: Customer Service Window
Randolph Building
401 Dulany Street
Alexandria, VA 22314

Telephone inquiries related to this decision should be directed to the undersigned at (571) 272-3228.

Edward J. Tannouse
Petitions Attorney
Office of Petitions
Office of the Deputy Commissioner
for Patent Examination Policy

UNITED STATES PATENT AND TRADEMARK OFFICE

Commissioner for Patents
United States Patent and Trademark Office
P.O. Box 1450
Alexandria, VA 22313-1450
www.uspto.gov

DOUGLAS T. JOHNSON
MILLER & MARTIN
1000 VOLUNTEER BUILDING
832 GEORGIA AVENUE
CHATTANOOGA, TN 37402-2289

COPY MAILED

JAN 2 0 2006

OFFICE OF PETITIONS

In re Application of
Russell Grove, Randall Wharton
and Nathan Brown
Application No. 11/073,273
Filed: March 4, 2005
For: SCALABLE AUCTION MANAGEMENT SYSTEM WITH CENTRALIZED COMMERCE SERVICES

DECISION GRANTING PETITION UNDER 37 CFR 1.47(a)

This is in response to the "Request For Reconsideration of Petition Under 37 CFR 1.47(a)," filed January 3, 2006 (Certificate of Mailing date: December 30, 2005).

The petition is **granted**.

Petitioner has shown that non-signing inventor Nathan Brown has refused to join in the filing of the above-identified application.

The above-identified application and papers have been reviewed and found in compliance with 37 CFR 1.47(a). This application is hereby accorded Rule 1.47(a) status. As provided in Rule 1.47(c), this Office will forward notice of this application's filing to the non-signing inventor at the address given in the petition. Notice of the filing of this application will also be published in the Official Gazette.

The file is being forwarded to Technology Center 3600 for examination *in due course*.

Telephone inquiries regarding this decision should be directed to the undersigned at (571) 272-3228.

Edward J. Tannouse
Petitions Attorney
Office of Petitions
Office of the Deputy Commissioner
for Patent Examination Policy

UNITED STATES PATENT AND TRADEMARK OFFICE

Commissioner for Patents
United States Patent and Trademark Office
P.O. Box 1450
Alexandria, VA 22313-1450
www.uspto.go

NATHAN BROWN
2615 E. 14TH STREET, APT. 2
CHATTANOOGA, TN 37404

COPY MAILED

JAN 2 0 2006

OFFICE OF PETITIONS

In re Application of
Russell Grove, Randall Wharton
and Nathan Brown
Application No. 11/073,273
Filed: March 4, 2005
For: SCALABLE AUCTION MANAGEMENT SYSTEM WITH CENTRALIZED COMMERCE SERVICES

Dear NATHAN BROWN:

You are named as a joint inventor in the above identified United States patent application, filed under the provisions of 35 U.S.C. 116 (United States Code), and 37 CFR 1.47(a), Rules of Practice in Patent Cases. Should a patent be granted on the application you will be designated therein as a joint inventor.

As a named inventor you are entitled to inspect any paper in the file wrapper of the application, order copies of all or any part thereof (at a prepaid cost per 37 CFR 1.19) or make your position of record in the application. Alternatively, you may arrange to do any of the preceding through a registered patent attorney or agent presenting written authorization from you. If you care to join the application, counsel of record (see below) would presumably assist you. Joining in the application would entail the filing of an appropriate oath or declaration by you pursuant to 37 CFR 1.63.

Telephone inquiries regarding this communication should be directed to the undersigned at (571) 272-3228. Requests for information regarding your application should be directed to the File Information Unit at (703) 308-2733. Information regarding how to pay for and order a copy of the application, or a specific paper in the application, should be directed to Certification Division at (703) 308-9726 or 1 (800) 972-6382 (outside the Washington D.C. area).

Edward J. Tannouse
Petitions Attorney
Office of Petitions
Office of the Deputy Commissioner
for Patent Examination Policy

DOUGLAS T. JOHNSON
MILLER & MARTIN
1000 VOLUNTEER BUILDING
832 GEORGIA AVENUE
CHATTANOOGA, TN 37402-2289

UNITED STATES PATENT AND TRADEMARK OFFICE

UNITED STATES DEPARTMENT OF COMMERCE
United States Patent and Trademark Office
Address: COMMISSIONER FOR PATENTS
P.O. Box 1450
Alexandria, Virginia 22313-1450
www.uspto.gov

APPL NO.	FILING OR 371 (c) DATE	ART UNIT	FIL FEE REC'D	ATTY.DOCKET NO	DRAWINGS	TOT CLMS	IND CLMS
11/073,283	03/04/2005	2183	1900	040842	3	30	5

CONFIRMATION NO. 7930

CORRECTED FILING RECEIPT

OC000000016491462

23696
Qualcomm Incorporated
Patents Department
5775 Morehouse Drive
San Diego, CA 92121-1714

Date Mailed: 07/11/2005

Receipt is acknowledged of this regular Patent Application. It will be considered in its order and you will be notified as to the results of the examination. Be sure to provide the U.S. APPLICATION NUMBER, FILING DATE, NAME OF APPLICANT, and TITLE OF INVENTION when inquiring about this application. Fees transmitted by check or draft are subject to collection. Please verify the accuracy of the data presented on this receipt. **If an error is noted on this Filing Receipt, please mail to the Commissioner for Patents P.O. Box 1450 Alexandria Va 22313-1450. Please provide a copy of this Filing Receipt with the changes noted thereon. If you received a "Notice to File Missing Parts" for this application, please submit any corrections to this Filing Receipt with your reply to the Notice. When the USPTO processes the reply to the Notice, the USPTO will generate another Filing Receipt incorporating the requested corrections (if appropriate).**

Applicant(s)

Rodney Wayne Smith, Raleigh, NC;
Brian Michael Stempel, Raleigh, NC;
James Norris Dieffenderfer, Apex, NC;
Jeffrey Todd Bridges, Raleigh, NC;
Thomas Andrew Sartorius, Raleigh, NC;

Power of Attorney: The patent practitioners associated with Customer Number **23696**.

Domestic Priority data as claimed by applicant

Foreign Applications

If Required, Foreign Filing License Granted: 03/29/2005

The country code and number of your priority application, to be used for filing abroad under the Paris Convention, is US11/073,283

Projected Publication Date: 09/07/2006

Non-Publication Request: No

Early Publication Request: No

Title

Forward looking branch target address caching

Preliminary Class

712

PROTECTING YOUR INVENTION OUTSIDE THE UNITED STATES

Since the rights granted by a U.S. patent extend only throughout the territory of the United States and have no effect in a foreign country, an inventor who wishes patent protection in another country must apply for a patent in a specific country or in regional patent offices. Applicants may wish to consider the filing of an international application under the Patent Cooperation Treaty (PCT). An international (PCT) application generally has the same effect as a regular national patent application in each PCT-member country. The PCT process **simplifies** the filing of patent applications on the same invention in member countries, but **does not result** in a grant of "an international patent" and does not eliminate the need of applicants to file additional documents and fees in countries where patent protection is desired.

Almost every country has its own patent law, and a person desiring a patent in a particular country must make an application for patent in that country in accordance with its particular laws. Since the laws of many countries differ in various respects from the patent law of the United States, applicants are advised to seek guidance from specific foreign countries to ensure that patent rights are not lost prematurely.

Applicants also are advised that in the case of inventions made in the United States, the Director of the USPTO must issue a license before applicants can apply for a patent in a foreign country. The filing of a U.S. patent application serves as a request for a foreign filing license. The application's filing receipt contains further information and guidance as to the status of applicant's license for foreign filing.

Applicants may wish to consult the USPTO booklet, "General Information Concerning Patents" (specifically, the section entitled "Treaties and Foreign Patents") for more information on timeframes and deadlines for filing foreign patent applications. The guide is available either by contacting the USPTO Contact Center at 800-786-9199, or it can be viewed on the USPTO website at http://www.uspto.gov/web/offices/pac/doc/general/index.html.

LICENSE FOR FOREIGN FILING UNDER
Title 35, United States Code, Section 184
Title 37, Code of Federal Regulations, 5.11 & 5.15

GRANTED

The applicant has been granted a license under 35 U.S.C. 184, if the phrase "IF REQUIRED, FOREIGN FILING LICENSE GRANTED" followed by a date appears on this form. Such licenses are issued in all applications where the conditions for issuance of a license have been met, regardless of whether or not a license may be required as set forth in 37 CFR 5.15. The scope and limitations of this license are set forth in 37 CFR 5.15(a) unless an earlier license has been issued under 37 CFR 5.15(b). The license is subject to revocation upon written notification. The date indicated is the effective date of the license, unless an earlier license of similar scope has been granted under 37 CFR 5.13 or 5.14.

This license is to be retained by the licensee and may be used at any time on or after the effective date thereof unless it is revoked. This license is automatically transferred to any related applications(s) filed under 37 CFR 1.53(d). This license is not retroactive.

The grant of a license does not in any way lessen the responsibility of a licensee for the security of the subject matter as imposed by any Government contract or the provisions of existing laws relating to espionage and the

national security or the export of technical data. Licensees should apprise themselves of current regulations especially with respect to certain countries, of other agencies, particularly the Office of Defense Trade Controls, Department of State (with respect to Arms, Munitions and Implements of War (22 CFR 121-128)); the Office of Export Administration, Department of Commerce (15 CFR 370.10 (j)); the Office of Foreign Assets Control, Department of Treasury (31 CFR Parts 500+) and the Department of Energy.

NOT GRANTED

No license under 35 U.S.C. 184 has been granted at this time, if the phrase "IF REQUIRED, FOREIGN FILING LICENSE GRANTED" DOES NOT appear on this form. Applicant may still petition for a license under 37 CFR 5.12, if a license is desired before the expiration of 6 months from the filing date of the application. If 6 months has lapsed from the filing date of this application and the licensee has not received any indication of a secrecy order under 35 U.S.C. 181, the licensee may foreign file the application pursuant to 37 CFR 5.15(b).

UNITED STATES PATENT AND TRADEMARK OFFICE

Commissioner for Patents
United States Patent and Trademark Office
P.O. Box 1450
Alexandria, VA 22313-1450
www.uspto.gov

ADVANTEDGE LAW GROUP, LLC
3301 N. UNIVERSITY AVE
SUITE 200
PROVO UT 84604

COPY MAILED

OCT 01 2008

OFFICE OF PETITIONS

In re Application of	:	
Zdzislaw B. Malinowski, et al.	:	
Application No. 11/073,290	:	DECISION ON PETITION
Filed: March 4, 2005	:	TO WITHDRAW
Attorney Docket No. 10537-783002	:	FROM RECORD
	:	

This is a decision on the Request to Withdraw as attorney or agent of record under 37 C.F.R. § 1.36(b), filed February 15, 2008.

The request is **NOT APPROVED**.

A grantable request to withdraw as attorney/agent of record must be signed by every attorney/agent seeking to withdraw or contain a clear indication that one attorney is signing on behalf of another/others. A request to withdraw will not be approved unless at least 30 (thirty) days would remain between the date of approval and the later of the expiration date of a time to file a response or the expiration date of the maximum time period which can be extended under 37 C.F.R. § 1.136(a).

The request to withdraw less than all attorneys appointed by customer number 71418 cannot be approved. The addition and/or deletion of a practitioner from the list of practitioners associated with a Customer Number should be made by submitting a "Request for Customer Number Data Change" (PTO/SB/124) which will result in the addition or deletion of such practitioner from the list of persons authorized to represent any applicant or assignee of the entire interest who appointed all of the practitioners associated with such Customer Number. See MPEP 403 Section I. Customer Number Practice.

All future communications from the Office will continue to be directed to the above-listed address until otherwise notified by applicant.

Telephone inquiries concerning this decision should be directed to undersigned at 571-272-1642.

April M. Wise
Petitions Examiner
Office of Petitions

SPE RESPONSE FOR CERTIFICATE OF CORRECTION

Paper No.: _____

DATE : 1-14-09

TO SPE OF : ART UNIT 2612

SUBJECT : Request for Certificate of Correction for Appl. No.: 11073292 Patent No.: 7382257

Please respond to this request for a certificate of correction within 7 days.

FOR IFW FILES:

Please review the requested changes/corrections as shown in the **COCIN** document(s) in the IFW application image. No new matter should be introduced, nor should the scope or meaning of the claims be changed.

Please complete the response (see below) and forward the completed response to scanning using document code **COCX**.

FOR PAPER FILES:

Please review the requested changes/corrections as shown in the attached certificate of correction. Please complete this form (see below) and forward it with the file to:

Certificates of Correction Branch (CofC)
South Tower - 9A22
Palm Location 7580

Valerie Jackson
Certificates of Correction Branch
703-308-9390 ext. 114

Thank You For Your Assistance

The request for issuing the above-identified correction(s) is hereby:
Note your decision on the appropriate box.

- [x] **Approved** — **All** changes apply.
- [ ] **Approved in Part** — Specify below which changes **do not** apply.
- [ ] **Denied** — State the reasons for denial below.

Comments: _____

/Benjamin C. Lee/ Supervisory Patent Examiner — **SPE**

2612 — **Art Unit**

UNITED STATES PATENT AND TRADEMARK OFFICE

Commissioner for Patents
United States Patent and Trademark Office
P.O. Box 1450
Alexandria, VA 22313-1450
www.uspto.gov

JUL 20 2005

MORRISON & FOERSTER LLP
755 PAGE MILL RD
PALO ALTO, CA 94304-1018

In re application of N. Caleb Avery Application No. 11/073,300 Filed: March 04, 2005 For: METHOD AND SYSTEM FOR OPTIMAL PRICING AND ALLOCATION	: : : : :	**DECISION ON PETITION TO MAKE SPECIAL (ACCELERATED EXAMINATION)**

This is in response to the petition filed on June 07, 2005 to make the above-identified application special on the basis of special examining procedure for certain new applications - accelerated examination as set forth in MPEP § 708.02 VIII.

The requirements for granting special status under this section are: (A) a petition to make special accompanied by the fee set forth in 37 CFR 1.17(h); (B) all claims being directed to a single invention, or an election without traverse if the Office determines that all the claims are not directed to a single invention; (C) a statement that a pre-examination search was made listing the field of search; (D) one copy of each of the references deemed most closely related to the subject matter encompassed by the claims if said references are not already of record; and (E) a detailed discussion of how the claimed subject matter is patentable over the references in accordance with 37 CFR 1.111 (b) and (c).

The petition fails to adequately meet requirements (B) above. In this regard, item (B) is not met because the petition fails to include an election without traverse, or a statement that applicants are willing to elect without traverse should a restriction or election be required.

For the above stated reasons, the petition is **DISMISSED**.

Petitioner is given one more opportunity to perfect the petition. Any request for reconsideration must be filed within TWO MONTHS of the date of this decision. Extensions of time under 37 CFR 1.136(a) are permitted.

Applicant should promptly submit a renewed petition to the Commissioner for Patents, P.O. Box 1450, Alexandria, VA 22313-1450. The envelope should indicate that the correspondence be brought to the attention of Technology Center 3600.

Until the renewed petition is submitted, the application will be returned to the examiner's docket to await treatment on the merits in the normal order of examination.

Kenneth Dorner
Special Programs Examiner
Technology Center 3600
(571) 272-6587

KJD/slb: 06/23/05

UNITED STATES PATENT AND TRADEMARK OFFICE

Commissioner for Patents
United States Patent and Trademark Office
P.O. Box 1450
Alexandria, VA 22313-1450
www.uspto.gov

JAN 18 2006

MORRISON & FOERSTER LLP
755 PAGE MILL RD
PALO ALTO, CA 94304-1018

In re application of	:	**DECISION ON PETITION**
N. Caleb Avery	:	**TO MAKE SPECIAL**
Application No. 11/073,300	:	**(ACCELERATED**
Filed: March 04, 2005	:	**EXAMINATION)**
For: METHOD AND SYSTEM FOR OPTIMAL PRICING AND ALLOCATION		

This is in response to the resubmitted petition filed on August 12, 2005 to make the above-identified application special on the basis of special examining procedure for certain new applications - accelerated examination as set forth in MPEP § 708.02 VIII.

The requirements for granting special status under this section are: (A) a petition to make special accompanied by the fee set forth in 37 CFR 1.17(i); (B) all claims being directed to a single invention, or an election without traverse if the Office determines that all the claims are not directed to a single invention; (C) a statement that a pre-examination search was made listing the field of search; (D) one copy of each of the references deemed most closely related to the subject matter encompassed by the claims if said references are not already of record; and (E) a detailed discussion of how the claimed subject matter is patentable over the references in accordance with 37 CFR 1.111 (b) and (c).

Since all of the requirements for special status under MPEP § 708.02 VIII have been met, the petition is **GRANTED**.

The examiner is directed (1) to make an interference search for possible interfering applications, (2) to promptly examine this application out of turn, and (3) if any interfering application is discovered, to examine such application simultaneously and state in the first official letter of such application that it is being taken out of turn because of a possible interference.

Petitioner is advised that this application will continue to be special, throughout its entire prosecution and pendency, including interference or appeal, if any, only if petitioner makes a prompt ***bona fide*** effort, in response to each Office action, to place the application in condition for allowance, even if it is necessary to conduct an interview with the examiner to accomplish this purpose.

SUMMARY: Petition to Make Special **GRANTED.**

Kenneth J. Dorner
Special Programs Examiner
Technology Center 3600
(571) 272-6587

KJD/slb: 01/05/06

UNITED STATES PATENT AND TRADEMARK OFFICE

Commissioner for Patents
United States Patent and Trademark Office
P.O. Box 1450
Alexandria, VA 22313-1450
www.uspto.gov

MORGAN & FINNEGAN, L.L.P.
3 WORLD FINANCIAL CENTER
NEW YORK, NY 10381-2101

COPY MAILED
DEC 15 2006
OFFICE OF PETITIONS

In re Application of	:	
DAKE, et al.	:	
Application No. 11/073,307	:	DECISION ON PETITION
Filed: March 03, 2005	:	TO WITHDRAW
Attorney Docket No. 13720-105067	:	FROM RECORD
	:	

This is a decision on the Request to Withdraw as attorney or agent of record under 37 C.F.R. § 1.36(b), filed October 03, 2006.

The request is **NOT APPROVED** as moot.

A review of the file record indicates that the power of attorney to MORGAN & FINNEGAN, LLP has been revoked by the assignee of the patent application on November 16, 2006. Accordingly, the request to withdraw under 37 C.F.R. § 1.36(b) is moot.

All future communications from the Office will continue to be directed to the address indicated below until otherwise notified by applicant.

Telephone inquires concerning this decision should be directed to Patricia Volpe at 571-272-6825.

Patricia Volpe
Petitions Examiner
Office of Petitions

cc: KING & SPALDING
1185 AVENUE OF THE AMERICAS
NEW YORK, NY 10036-4003

UNITED STATES PATENT AND TRADEMARK OFFICE

UNITED STATES DEPARTMENT OF COMMERCE
United States Patent and Trademark Office
Address: COMMISSIONER FOR PATENTS
P.O. Box 1450
Alexandria, Virginia 22313-1450
www.uspto.gov

APPLICATION NUMBER	FILING OR 371 (c) DATE	FIRST NAMED APPLICANT	ATTY. DOCKET NO./TITLE
11/073,307	03/03/2005	Michael D. Dake	4649-4003US1

CONFIRMATION NO. 7747

MORGAN & FINNEGAN, L.L.P.
3 World Financial Center
New York, NY 10381-2101

OC000000021620756

Date Mailed: 12/15/2006

NOTICE REGARDING CHANGE OF POWER OF ATTORNEY

This is in response to the Power of Attorney filed 11/16/2006.

- The Power of Attorney to you in this application has been revoked by the assignee who has intervened as provided by 37 CFR 3.71. Future correspondence will be mailed to the new address of record(37 CFR 1.33).

PATRICIA A VOLPE
OP (571) 272-6825

FORMER ATTORNEY/AGENT COPY

UNITED STATES PATENT AND TRADEMARK OFFICE

Commissioner for Patents
United States Patent and Trademark Office
P.O. Box 1450
Alexandria, VA 22313-1450
www.uspto.gov

KYOCERA WIRELESS CORP.
P.O. BOX 928289
SAN DIEGO, CA 92192-8289

COPY MAILED

APR 2 0 2007

OFFICE OF PETITIONS

In re Application of	:	
Timothy Davod Forrester	:	
Application No.: 11/073312	:	ON PETITION
Filing or 371(c) Date: 03/04/2005	:	
Attorney Docket Number: 00081 US	:	

This is a decision on the Petition for Revival of an Application for Patent Abandoned Unavoidably Under 37 C.F.R. § 1.137(a), filed December 14, 2006.

This Petition is hereby **dismissed**.

Any further petition must be submitted within TWO (2) MONTHS from the mail date of this decision. Extensions of time under 37 CFR 1.136(a) are permitted. The reconsideration request should include a cover letter entitled "Renewed Petition under [insert the applicable code section]." This is **not** final agency action within the meaning of 5 U.S.C. § 704.

Background

The above-identified application became abandoned for failure to timely reply to the non-final office action, mailed April 7, 2006. The Office action set a three (3) period for reply. Extensions of time under 37 CFR 1.136(a) were available. No reply having been received, the application became abandoned on July 8, 2006. The mailing of this Decision precedes the mailing of a Notice of Abandonment.

Applicant files the instant petition and Amendment in response to the Office action, and asserts that the the delay was unavoidable because the Office action was not received.

A Grantable Petition Under 37 CFR 1.137(a)

A grantable petition to revive an abandoned application under 37 CFR 1.137(a) must be accompanied by: (1) the required reply (unless previously filed), which may met by the filing of a notice of appeal and the requisite fee; a continuing application; an amendment or request for reconsideration which *prima facie* places the application in condition for allowance, or a first or second submission under 37 CFR 1.129(a) if the application has been pending for at least two

years as of June 8, 1995, taking into account any reference made in such application to any earlier filed application under 35 USC 120, 121 and 365(c); (**2**) the petition fee as set forth in 37 CFR 1.17(l); (**3**) a showing to the satisfaction of the Director that the entire delay in filing the required reply from the due date for the reply until the filing of a grantable petition pursuant to 37 CFR 1.137(a) was unavoidable; and (**4**) any terminal disclaimer (and fee as set forth in 37 CFR 1.20(d)) required pursuant to 37 CFR 1.137(c).

Applicant lacks item (**3**) as set forth above.

The MPEP provides:

> The showing required to establish non-receipt of an Office communication must include a statement from the practitioner stating that the Office communication was not received by the practitioner and attesting to the fact that a search of the file jacket and docket records indicates that the Office communication was not received.
>
> A copy of the docket record where the non-received Office communication would have been entered had it been received and docketed must be attached to and referenced in practitioner's statement. For example, if a three month period for reply was set in the non-received Office action, a copy of the docket report showing all replies docketed for a date three months from the mail date of the non-received Office action must be submitted as documentary proof of non-receipt of the Office action.
>
> The showing outlined above may not be sufficient if there are circumstances that point to a conclusion that the Office action may have been lost after receipt rather than a conclusion that the Office action was lost in the mail (e.g., if the practitioner has a history of not receiving Office actions).

MPEP 711.03(c)

<u>Analysis</u>

Applicant has not provided a statement that the Office communication was not received by the practitioner and attesting to the fact that a search of the file jacket and docket records indicates that the Office communication was not received. Applicant has also not provided a copy of the docket record where the non-received Office communication would have been entered had it been received and docketed.

Also, the address in the petition differs from the correspondence address of record. As such, it is unclear whether the person signing the petition is in a position to know whether the Office action was or was not received at the correspondence address of record. As such, there are circumstances that point to a conclusion that the Office action may have been lost after receipt rather than a conclusion that the Office action was lost in the mail (i.e., where Office communications are forwarded from the correspondence address of record to a secondary address.)

Further to this, the application file does not indicate a change of address has been filed in this case, although the address given on the petition differs from the address of record. A change of address should be filed in this case in accordance with MPEP 601.03. A courtesy copy of this decision is being mailed to the address noted on the petition. However, until otherwise instructed, all future correspondence regarding this application will be mailed solely to the address of record.

Conclusion

The petition is dismissed without prejudice. Applicant should file a request for reconsideration and provide the necessary statement and copies of documents.

Further correspondence with respect to this matter should be addressed as follows:

By mail: Commissioner for Patents
PO Box 1450
Alexandria, VA 22313-1450

By FAX: (571) 273-8300
Attn: Office of Petitions

By hand: Customer Service Window
Randolph Building
401 Dulany Street
Alexandria, VA 22314

Telephone inquiries concerning this matter should be directed to the undersigned at (571) 272-3232.

Derek L. Woods
Attorney
Office of Petitions

Cc: KATHLEEN L. CONNELL
10300 CAMPUS POINT DRIVE
SAN DIEGO, CA 92121

UNITED STATES PATENT AND TRADEMARK OFFICE

Commissioner for Patents
United States Patent and Trademark Office
P.O. Box 1450
Alexandria, VA 22313-1450
www.uspto.gov

KYOCERA WIRELESS CORP.
P.O. BOX 928289
SAN DIEGO, CA 92192-8289

COPY MAILED

AUG 09 2007

OFFICE OF PETITIONS

In re Application of	:	
Timothy Davod Forrester	:	
Application No.: 11/073312	:	ON PETITION
Filing or 371(c) Date: 03/04/2005	:	
Attorney Docket Number: 00081 US	:	

This is a decision on the "Renewed Petition Under 37 C.F.R. § 1.137(a)," filed June 29, 2007.

This Petition is hereby **granted**.

Background

The above-identified application became abandoned for failure to timely reply to the non-final Office action, mailed April 7, 2006. The Office action set a three (3) period for reply. Extensions of time under 37 CFR 1.136(a) were available. No reply having been received, the application became abandoned on July 8, 2006. The mailing of this Decision precedes the mailing of a Notice of Abandonment.

The December 14, 2006 petition

Applicant filed a petition December 14, 2006, and asserted that the delay was unavoidable because the Office action was not received.

The petition was dismissed in a Decision mailed April 20, 2007. The Decision dismissing the petition informed Applicant that the showing required to establish non-receipt of an Office communication must include

1) a statement from the practitioner stating that the Office communication was not received by the practitioner and attesting to the fact that a search of the file jacket and docket records indicates that the Office communication was not received.
2) A copy of the docket record where the non-received Office communication would have been entered had it been received and docketed must be attached to and referenced in practitioner's statement. (For example, if a three month period for reply was set in the non-received Office action, a copy of the docket report showing all replies docketed for a

date three months from the mail date of the non-received Office action must be submitted as documentary proof of non-receipt of the Office action.).

MPEP 711.03(c)

The present renewed petition

Applicant files the present renewed petition and includes the necessary statement and a copy of the docket records. Applicant has demonstrated non-receipt of the Office action by a preponderance of the evidence. Accordingly, the petition is granted.

Applicant filed a reply to the Office action on December 14, 2006.

The application will be referred to 2617 for processing of the reply, and for continued examination in due course.

Telephone inquiries concerning this matter should be directed to the undersigned at (571) 272-3232.

Derek L. Woods
Attorney
Office of Petitions

UNITED STATES PATENT AND TRADEMARK OFFICE

COMMISSIONER FOR PATENTS
UNITED STATES PATENT AND TRADEMARK OFFICE
P.O. BOX 1450
ALEXANDRIA, VA 22313-1450
www.uspto.gov

INTEL/BLAKELY
1279 OAKMEAD PARKWAY
SUNNYVALE, CA 94085-4040

COPY MAILED

MAR 12 2008

OFFICE OF PETITIONS

In re Application of
Justin K. Brask, et al.
Application No. 11/073,324
Filed: March 4, 2005
Attorney Docket No. 42P16004C

ON PETITION

This is a decision in response to the petition, filed October 24, 2007, to revive the above-identified application under the provisions of 37 CFR 1.137(b).

The petition is **GRANTED**.

The application became abandoned for failure to reply in a timely manner to the non-final Office action mailed February 15, 2007. A Notice of Abandonment was mailed on October 15, 2007. In response, on October 24, 2007, the present petition was filed.

It is noted that the address given on the petition differs from the address of record. If appropriate, a change of address should be filed in accordance with MPEP 601.03. A courtesy copy of this decision is being mailed to the address given on the petition; however, the Office will mail all future correspondence solely to the address of record.

The petition satisfies the requirements of 37 CFR 1.137(b) in that petitioner has supplied (1) the reply in the form of amendment; (2) the petition fee of $1,540; and (3) an adequate statement of unintentional delay[1].

The application is being referred to Technology Center AU 2813 for consideration of the amendment filed October 24, 2007.

Telephone inquiries concerning this decision should be directed to the undersigned at (571) 272-3204. Inquiries relating to further prosecution should be directed to the Technology Center.

Sherry D. Brinkley
Petitions Examiner
Office of Petitions

cc: GEORGE CHEN
P.O. BOX 52050
MINNEAPLIS, MN 55402

[1] 37 CFR 1.137(b)(3) requires a statement that the entire delay in filing the required reply from the due date for the reply until the filing of a grantable petition pursuant to 37 CFR 1.137(b) was unintentional. While the statement is not made by an attorney of record, such statement is being treated as having been made as the result of a reasonable inquiry into the facts and circumstances of such delay. See 37 CFR 10.18(b) and Changes to Patent Practice and Procedure; Final Rule Notice, 62 Fed. Reg. 53131, 53178 (October 10, 1997), 1203 Off. Gaz. Pat. Office 63, 103 (October 21, 1997). In the event that such an inquiry has not been made, petitioner must make such an inquiry. If such inquiry results in the discovery that it is not correct that the entire delay in filing the required reply from the due date for the reply until the filing of a grantable petition pursuant to 37 CFR 1.137(b) was unintentional, petitioner must notify the Office.

Copied from 10073324 on 04/11/2008

UNITED STATES PATENT AND TRADEMARK OFFICE

Commissioner for Patents
United States Patent and Trademark Office
P.O. Box 1450
Alexandria, VA 22313-1450
www.uspto.gov

MAILED
AUG 19 2009
OFFICE OF PETITIONS

PHILIP S. JOHNSON
JOHNSON & JOHNSON
ONE JOHNSON & JOHNSON PLAZA
NEW BRUNSWICK, NJ 08933-7003

In re Application of :
Nam T. Chao et al :
Application No. 11/073,325 : ON PETITION
Filed: March 4, 2005 :
Attorney Docket No. DUQ-006RCE2

This is a decision on the petition, filed August 18, 2009 under 37 CFR 1.313(c)(2) to withdraw the above-identified application from issue after payment of the issue fee.

The petition is **GRANTED.**

The above-identified application is withdrawn from issue for consideration of a submission under 37 CFR 1.114 (request for continued examination). See 37 CFR 1.313(c)(2).

Petitioner is advised that the issue fee paid on August 13, 2009 in the above-identified application cannot be refunded. If, however, the above-identified application is again allowed, petitioner may request that it be applied towards the issue fee required by the new Notice of Allowance.[1]

The file does not indicate a change of address has been submitted, although the address given on the petition differs from the address of record. If appropriate, a change of address should be filed in accordance with MPEP 601.03. A courtesy copy of this decision is being mailed to the address given on the petition; however, the Office will mail all future correspondence solely to the address of record.

Telephone inquiries should be directed to Irvin Dingle at (571) 272-3210.

This matter is being referred to Technology Center AU 3775 for processing of the request for continued examination under 37 CFR 1.114 and for consideration of the concurrently filed Information Disclosure Statement.

/Irvin Dingle/
Irvin Dingle
Petitions Examiner
Office of Petitions

cc: Kevin J. Canning
Lahive & Cockfield, LLP
One Post Office Square
Boston, MA 02109-2127

---

[1] The request to apply the issue fee to the new Notice may be satisfied by completing and returning the new Issue Fee Transmittal Form PTOL-85(b), which includes the following language thereon: Commissioner for Patents is requested to apply the Issue Fee and Publication Fee (if any) or re-apply any previously paid issue fee to the application identified above. Petitioner is advised that, whether a fee is indicated as being due or not, the Issue Fee Transmittal Form **must** be completed and timely submitted to avoid abandonment. Note the language in bold text on the first page of the Notice of Allowance and Fee(s) Due (PTOL-85).

UNITED STATES PATENT AND TRADEMARK OFFICE

UNITED STATES DEPARTMENT OF COMMERCE
United States Patent and Trademark Office
Address: COMMISSIONER FOR PATENTS
P.O. Box 1450
Alexandria, Virginia 22313-1450
www.uspto.gov

Weaver Austin Villeneuve & Sampson LLP
P.O. BOX 70250
OAKLAND, CA 94612-0250

Mail Date: 04/20/2010

Applicant	: Paul A. Price	: DECISION ON REQUEST FOR
Patent Number	: 7670599	: RECALCULATION of PATENT
Issue Date	: 03/02/2010	: TERM ADJUSTMENT IN VIEW
Appliction No	: 11/073,333	: OF WYETH
Filed	: 03/04/2005	:
		:

The Patentee's Request for Recalculation is **DISMISSED.**

This Request is deemed ineligible for consideration for one or more of the following reasons:

(A). The patent for which PTA recalculation is requested is either a design or reissue application or is a reexamination proceeding;

(B). The patent for which PTA recalculation is requested resulted from a utility or plant application filed under 35 USC 111(a) before May 29, 2000 and no CPA filed in the application on/after May 29, 2000;

(C). The patent for which PTA recalculation is requested resulted from an international application in which the international filing date was before May 29, 2000 and no CPA filed in the application on/after May 29, 2000;

(D). The patent for which PTA recalculation is requested issued on/after March 2, 2010;

(E). The Request for Recalculation was filed more than 180 days after the grant date of the patent and the request was not filed within two months of a dismissal of a request for reconsideration of the of the patent term under 37 CFR 1.705(d);

(F). The Request for Recalculation is not solely limited to USPTO pre-Wyeth interpretation of 35 U.S.C. 154(b)(2)(A);

or

(G). A civil action was filed pursuant to 35 U.S.C. 154(b)(4)(A)concerning the same patent at issue in this request.

Patentee may file a reply to this decision dismissing the Request for Recalculation. Patentee must file such reply within one month or thirty days, whichever is longer, of the mail date of the decision dismissing the Request for Recalculation. No fee is required if patentee is asserting in the reply that the dismissal for ineligibility is improper.

Patentee should use document code PET.OP if electronically filing a reply to this dismissal. If the USPTO finds that the request was improperly deemed ineligible, the USPTO will mail applicant a recalculation determination.

Patentee should be aware that in order to preserve the right to review in the United States District Court for the District of Columbia of the USPTO patent term adjustment determination, patentee must ensure that he or she also take the steps required under 35 U.S.C. 154(b)(4)(A). Nothing in the request for recalculation should be construed as providing an alternative time frame for commencing a civil action under 35 U.S.C. 154 (b)(4)(A).

Any questions concerning this decision should be directed to the Office of Patent Legal Administration at 571-272-7702.

UNITED STATES PATENT AND TRADEMARK OFFICE

COMMISSIONER FOR PATENTS
UNITED STATES PATENT AND TRADEMARK OFFICE
P.O. BOX 1450
ALEXANDRIA, VA 22313-1450
www.uspto.gov

COPY MAILED
SEP 13 2006
OFFICE OF PETITIONS

MERCHANT & GOULD PC
P.O. BOX 2903
MINNEAPOLIS, MN 55402-0903

In re Application of	:	
Michael H. Thomas, et al.	:	
Application No. 11/073,340	:	ON PETITION
Filed: March 4, 2005	:	
Attorney Docket No. 50133.26US01/IMPJ-0094	:	

This is a decision on the petition, filed September 7, 2006 under 37 CFR 1.313(c)(2) to withdraw the above-identified application from issue after payment of the issue fee.

The petition is **DISMISSED as moot**.

Unfortunately, the petition was not referred to the appropriate official for a decision until after September 12, 2006, the date upon which the above-identified application issued as U.S. Patent No. 7,107,022.

37 CFR 1.313(d) states that "A petition under this section [37 CFR 1.313(c)] will not be effective to withdraw the application from issue unless it is actually received and granted by the appropriate officials **before the date of issue**." In this case, the petition was not received in the Office of Petitions for consideration until September 13, 2006. Therefore, the petition cannot be granted.

The inconvenience caused petitioner in this matter is sincerely regretted. However, applicants were cautioned to hand carry or fax petitions to withdraw from issue directly to the Office of Petitions to allow sufficient time to process the petition. *(See Revised Procedures for Papers Requiring Immediate Attention (Hand-Carried and Facsimile Transmissions), 1279 Off. Gaz. Pat. Office 149 (Feb. 24, 2004); Revised Procedures for Papers Requiring Immediate Attention, 1280 Off. Gaz. Pat. Office 917 (March 23, 2004).*

The request for continued examination (RCE) filed concurrently with the petition is improper in view of the issuance of the instant application into a patent on September 12, 2006. The RCE and the information disclosure statement (IDS) will remain in the file of the above-identified application without further consideration. See 37 CFR 1.97(I). The $790 RCE filing fee paid on

September 7, 2006 is being credited to counsel's deposit account. It is further noted that the fees due at issue were paid on August 4, 2006 and again on September 7, 2006. Therefore, the overpayment of fees paid on September 7, 2006 will also be credited to counsel's deposit.

Telephone inquiries concerning this decision may be directed to the undersigned at (571) 272-3204.

Sherry D. Brinkley
Petitions Examiner
Office of Petitions

UNITED STATES PATENT AND TRADEMARK OFFICE

UNITED STATES DEPARTMENT OF COMMERCE
United States Patent and Trademark Office
Address: COMMISSIONER FOR PATENTS
P.O. Box 1450
Alexandria, Virginia 22313-1450
www.uspto.gov

HICKMAN PALERMO TRUONG & BECKER, LLP
2055 GATEWAY PLACE
SUITE 550
SAN JOSE, CA 95110

Mail Date: 04/21/2010

Applicant	: John Scudder	: DECISION ON REQUEST FOR
Patent Number	: 7602796	: RECALCULATION of PATENT
Issue Date	: 10/13/2009	: TERM ADJUSTMENT IN VIEW
Appliction No	: 11/073,351	: OF WYETH AND NOTICE OF INTENT TO
Filed	: 03/04/2005	: ISSUE CERTIFICATE OF CORRECTION
		:

The Request for Recalculation is **GRANTED** to the extent indicated.

The patent term adjustment has been determined to be **1230** days. The USPTO will *sua sponte* issue a certificate of correction reflecting the amount of PTA days determined by the recalculation.

Prior to the issuance of the certificate of correction, the USPTO will afford patentee an opportunity to be heard and request reconsideration. Accordingly, patentee has **one month or thirty (30) days**, whichever is longer, to file a request for reconsideration of this patent term adjustment calculation. See 35 U.S.C. 154(b)(3)(B)(ii) and 37 CFR 1.322(a)(4). No extensions of time will be granted under 37 CFR 1.136.

Patentee should use document code PET.OP if electronically filing a request for reconsideration of this patent term adjustment calculation. The patentee must also include the information required by 37 CFR 1.705(b)(2) and the fee required by 37 CFR 1.18(e). If patentee does not file a timely request for reconsideration of this patent term adjustment calculation including the information required by 37 CFR 1.705(b)(2) and the fee required by 37 CFR 1.18(e), the USPTO will issue a certificate of correction reflecting the PTA determination noted above.

Patentee should be aware that in order to preserve the right to review in the United States District Court for the District of Columbia of the USPTO patent term adjustment determination, patentee must ensure that he or she also take the steps required under 35 U.S.C. 154(b)(4)(A) in a timely manner. Nothing in the request for recalculation should be construed as providing an alternative time frame for commencing a civil action under 35 U.S.C. 154(b)(4)(A).

Any questions concerning this decision should be directed to the Office of Patent Legal Administration at 571-272-7702.

UNITED STATES PATENT AND TRADEMARK OFFICE

Commissioner for Patents
United States Patent and Trademark Office
P.O. Box 1450
Alexandria, VA 22313-1450
www.uspto.gov

Cozen O'Connor, P.C.
1900 Market Street
Philadelphia, PA 91903-3508

COPY MAILED

JUN 0 5 2009

OFFICE OF PETITIONS

In re Application of	:	
Rangarajan Sampath et al.	:	
Application No. 11/073,362	:	DECISION ON PETITION
Filed: March 3, 2005	:	TO WITHDRAW
Attorney Docket No. DIBIS-0062US(58372.00003.UTL1)	:	FROM RECORD

This is a decision on the Request to Withdraw as attorney or agent of record under 37 C.F.R. § 1.36(b), filed October 27, 2005.

The request is **moot because a revocation of power of attorney has been filed**.

A review of the file record indicates that the power of attorney to Paul K. Legaard and all attorneys/agents of record has been revoked by the assignee of the patent application on March 28, 2006. Accordingly, the request to withdraw under 37 C.F.R. § 1.36(b) is moot.

All future communications from the Office will continue to be directed to the below-listed address until otherwise notified by applicant.

Telephone inquires concerning this decision should be directed to Kimberly Inabinet at 571-272-4618.

Kimberly Inabinet
Petitions Examiner
Office of Petitions

cc: Casimir Jones, S.C.
440 Science Drive
SUITE 203
Madison WI 53711

UNITED STATES PATENT AND TRADEMARK OFFICE

Commissioner for Patents
United States Patent and Trademark Office
P.O. Box 1450
Alexandria, VA 22313-1450
www.uspto.gov

MICHAEL A. O'NEIL, PC
5949 SHERRY LANE, SUITE 820
DALLAS, TX 75225

COPY MAILED

JUL 10 2008

OFFICE OF PETITIONS

In re Application of	:	
MIZER, Mike A., Sr.	:	
Application No. 11/073,375	:	DECISION ON PETITION
Filed: March 4, 2005	:	TO WITHDRAW
Attorney Docket No. **16041-1029**	:	FROM RECORD
	:	

This is a decision on the Request to Withdraw as attorney or agent of record under 37 C.F.R. § 1.36(b), filed October 2, 2007.

The request is **APPROVED.**

A grantable request to withdraw as attorney/agent of record must be signed by every attorney/agent seeking to withdraw or contain a clear indication that one attorney is signing on behalf of another/others. A request to withdraw will not be approved unless at least 30 (thirty) days would remain between the date of approval and the later of the expiration date of a time to file a response or the expiration date of the maximum time period which can be extended under 37 C.F.R. § 1.136(a).

The request was signed by Michael A. O'Neil, the sole attorney of record. Michael O'Neil has been withdrawn as attorney or agent of record. Applicant is reminded that there is no attorney of record at this time.

All future correspondence will be directed to the sole named inventor Michael A. Mizer at the address indicated below.

The application was issued into patent no. 7,308,734 on December 18, 2007.

Telephone inquiries concerning this decision should be directed to the undersigned at 571-272-7253.

Monica A. Graves
Petitions Examiner
Office of Petitions

cc: MIKE MIZER
CANTRELL WORLDWIDE, INC.
2154 CHANNAULT DRIVE, SUITE A
CARROLLTON, TX 75006

UNITED STATES PATENT AND TRADEMARK OFFICE

Commissioner for Patents
United States Patent and Trademark Office
P.O. Box 1450
Alexandria, VA 22313-1450
www.uspto.gov

Elizabeth Galletta, Esq.
Wiggin and Dana LLP
Once Century Tower
P.O. Box 1832
New Haven, CT 06508-1832

(For Patent Owner)

MAILED

MAY 23 2006

REEXAM UNIT

Walter E. Hanley, Jr.
Kenyon & Kenyon LLP
One Broadway
New York, NY 10004

(For Requester)

In re Reissue Application of
Tang et al
Application No. 11/073,394
Filed: March 4, 2005
For: U.S. Patent No. 6,528,784

In re Tang et al
Reexamination Proceeding
Control No. 90/007,724
Filed: September 16, 2005
For: U.S. Patent No. 6,528,784

DECISION, *SUA SPONTE*, TO MERGE REISSUE AND REEXAMINATION PROCEEDINGS

The above-captioned reissue and reexamination proceedings are before the Office of Patent Legal Administration for *sua sponte* consideration of whether the proceedings should be merged under 37 CFR 1.565(d) at this time.

REVIEW OF FACTS

1. U.S. patent No. 6,528,784 (the '784 patent) issued on March 4, 2003, with 9 claims.

2. An application for reissue, assigned application No. 11/073,394 (the '394 application), was filed by the patent owner on March 4, 2005.

3. The filing of the '394 reissue application was announced in the *Official Gazette* on May 31, 2005.

4. A request for reexamination was filed by a third party requester on September 16, 2005, and was assigned control No. 90/007,724 (the '724 proceeding).

5. Reexamination was ordered for the '724 proceeding on November 4, 2005.

6. A communication was filed by the patent owner on December 9, 2005 that states that a Patent Owner's Statement will not be filed. A concurrently filed statement under 37 CFR 1.565 was included to inform the Examiner of the pending reissue application and litigation.

7. A patent owner's statement under 37 CFR 1.530 has not been received in the '784 proceeding, and the time for filing same has expired.

DISCUSSION REGARDING MERGER

Under 37 CFR 1.565(d):

> "If a reissue application and an *ex parte* reexamination proceeding on which an order pursuant to § 1.525 has been mailed are pending concurrently on a patent, a decision will normally be made to merge the two proceedings or to suspend one of the two proceedings."

As evidenced by the above review of facts, reissue application No. 11/073,394 and reexamination control No. 90/007,724 are currently pending. The order to reexamine has been mailed in the reexamination proceeding, and notice of the reissue application has been published in the *Official Gazette*; accordingly, a decision under 37 CFR 1.565(d) is timely.

The general policy of the Office is that a reissue application examination and a reexamination proceeding will not be conducted separately, and at the same time, as to a particular patent. The reason for this policy is to prevent inconsistent, and possibly conflicting, amendments from being introduced into the two proceedings on behalf of the patent owner. Normally, the proceedings will be merged when it is desirable to do so in the interest of expediting the prosecution of both proceedings. In making a decision on whether or not to merge the two proceedings, consideration will be given to the status of each proceeding. See MPEP 2285.

In order to provide efficient and prompt handling of the reissue and reexamination proceedings and to prevent inconsistent, and possibly conflicting, amendments from being introduced on behalf of the patent owner, it is appropriate that the instant reissue and reexamination proceedings be merged and a joint examination be conducted. Accordingly, the examination of the reissue application and the reexamination proceeding will be merged in accordance with the decision set forth below.

It is to be noted, however, that the grant of merger of a reissue application and an *ex parte* reexamination proceeding under 37 CFR 1.565(d) **is discretionary**. *The present merger is not an assurance that, in a future similar situation, merger would be ordered.*

DECISION MERGING THE REISSUE AND REEXAMINATION PROCEEDINGS

I. Merger of Proceedings

The above-captioned reissue and reexamination proceedings are hereby merged. A joint examination will be conducted in accordance with the following guidelines and requirements.

II. Requirement for Same Amendments in Both Proceedings

1. The patent owner is required to maintain identical amendments in the reissue application and the reexamination files for purposes of the merged proceeding. The maintenance of identical amendments in both files is required as long as the proceedings remain merged. See 37 CFR 1.565(d).

2. A review of the file for reexamination control No. 90/007,724 shows the presence of the following live claims: original patent claims 1-9.

   A review of reissue application No. 11/073,394 shows:

   (a) original patent claims 1-9 are present;

   (b) new claims 10-42 have been added.

   Accordingly, the claims are not identical in both proceedings.

   An appropriate housekeeping amendment is required within ONE (1) MONTH of this decision placing the same amendments in both proceedings, specifically, Application No. 11/073,394 and Control Number 90/007,724. The response to this requirement must be limited to formally placing the same amendments in all cases, and patent owner must **not** address any issue of patentability in the housekeeping amendment. It is to be noted that, pursuant to MPEP 2285, amendments in a merged proceeding are submitted under 37 CFR 1.173, in accordance with reissue practice.

III. Conduct of the Merged Reissue Application Examination and Reexamination Proceedings

1. After the appropriate housekeeping amendment (see Part II above) is received, or after the time for same expires, the examiner should promptly prepare an Office action for the merged proceeding.

2. In the event that a housekeeping amendment is not timely submitted, any claim which does not contain identical text in both proceedings should be rejected under 35 U.S.C. 112, paragraph 2, as being indefinite as to the content of the claim, and thus failing to particularly point out the invention.

3. Because the statutory provisions for reissue application examination include, *inter alia*, provisions equivalent to 35 U.S.C. 305 relating to the conduct of *ex parte* reexamination proceedings, the merged examination will be conducted on the basis of the rules relating to the broader, reissue-application examination. The examiner will apply the reissue statute, rules, and case law to the merged proceeding. **However, periods for response should be set at TWO (2) months to comply with the statutory requirement for special dispatch in *ex parte* reexamination (35 U.S.C. 305).**

4. Each Office action issued by the examiner will take the form of a *single action* which jointly applies to the reissue application and the reexamination proceeding. Each action will contain identifying data *for both of the cases*, i.e, the reissue application and the reexamination proceeding, and each action will be entered into both files (which will be maintained as separate files).

5. Any response by the applicant/patent owner must consist of a single response, with two copies being filed for entry in the two files, with each of the two bearing a signature. Any such response must contain identifying data *for both of the cases*, i.e, the reissue application and the reexamination proceeding. *Any such responses must be served on the requester*, who will also be sent copies of Office actions.

6. Pursuant to MPEP 2285, for a merged proceeding containing a reexamination proceeding and a reissue application:

> "Amendments should be submitted in accordance with the reissue practice under ... 37 CFR 1.173; see MPEP § 1453."

Thus, the filing of any amendments to the specification, claims, or drawings must comply with the provisions of 37 CFR 1.173, and with the guidelines of MPEP 1453. It is to be noted that 37 CFR 1.121 does not apply to amendments in a reissue application. Accordingly, clean copies of the amended claims are not required, *and such clean copies are not to be submitted*. Instead, pursuant to 37 CFR 1.173(b)(2), amendments are to be presented via markings pursuant to 37 CFR 1.173(d), except that a claim should be canceled by a statement canceling the claim, without presentation of the text of the claim.

Pursuant to 37 CFR 1.173(g), all amendments must be made relative to the patent specification, including the claims, and drawings, which are in effect as of the date of filing the reissue application. *Amendments are not to be made relative to previous amendments.* Thus, for all amendments, all words not appearing in the patent are always underlined, and only words being deleted from the patent appear in brackets.

7. Where a paper is filed which requires payment of a fee (e.g., petition fee, excess claims fee, appeal fee, brief fee, oral hearing fee), only a single fee need be paid. For example, only one fee need be paid for any patent owner appeal brief, even though such a brief would relate to the merged multiple proceedings, and even though copies must be filed (as pointed out above) for each file of the merged proceeding.

8. The examiner (a) will review the files to ensure that each file contains identical citations of prior patents and printed publications, and (b) will cite such documents as are necessary as part of the next Office action in order to place the files in that condition.

9. If the reissue application ultimately matures into a reissue patent, the reexamination proceeding shall be concluded by the grant of the reissue patent, and the reissue patent will serve as the certificate under 37 CFR 1.570. See MPEP 2285.

10. If the applicant/patent owner fails to file a timely and appropriate response to any Office action, the merged proceeding will be dissolved. The reissue application will be held abandoned. The reexamination prosecution

will be terminated, and a reexamination certificate under 37 CFR 1.570 will be issued in accordance with the last action of the Office, unless further action in the reexamination proceeding is needed as a result of the difference in the rules relating to reexamination and reissue proceedings. If further action in the reexamination proceeding is needed, any grounds of rejection which are not applicable under reexamination would be withdrawn (e.g., based on public use or sale), and any new grounds of rejection which are applicable under reexamination (e.g., improperly broadened claims) would be made by the examiner, upon dissolution of the merged proceeding. The existence of any questions/issues remaining which cannot be considered under reexamination following the dissolution would be noted by the examiner as not being proper for consideration in reexamination pursuant to 37 CFR 1.552(c).

10. If the applicant/patent owner files an express abandonment of the reissue application pursuant to 37 CFR 1.138, the next Office action of the examiner will accept the express abandonment, dissolve the merged proceeding, and continue examination as to the reexamination proceeding. Such examination would be conducted as set forth in the immediately preceding paragraph.

CONCLUSION

1. Reissue application No. 11/073,394 and reexamination control No. 90/007,724 **<u>are merged</u>** into a single proceeding.

2. Pursuant to Part II of this decision, a housekeeping amendment is required within ONE MONTH of this decision, placing the same amendments in both cases of the present merged proceeding.

3. Jurisdiction over the merged reissue and reexamination proceeding is being transferred to Technology Center 2800 in which the reissue proceeding is assigned. The examiner assigned the merged proceeding is not to be one who was involved in any part of the examination of the '784 patent (e.g., by preparing/signing an action), or was so involved in the examination of the parent of the '784 patent. See MPEP 2236.

4. The examiner should not issue an Office action for the present merged proceeding until after the expiration of the ONE (1) MONTH period (from the mailing of this

decision) for filing the amendment.

5. All further examination in the merged proceeding should be conducted in accordance with Part III of this decision.

6. Telephone inquiries related to this decision should be directed to Karen Hastings, Legal Advisor, at (571) 272-7717.

Kenneth M. Schor
Senior Legal Advisor
Office of Patent Legal Administration

kmh
22 May 2006

5-23-06
C:\kiva\kenpetmerger\7724Merge_cls-different_3PR.wpd

SPE RESPONSE FOR CERTIFICATE OF CORRECTION

Paper No.:20091201

DATE : December 01, 2009

TO SPE OF : ART UNIT 2881

SUBJECT : Request for Certificate of Correction on Patent No.: RE40,632

A response is requested with respect to the accompanying request for a certificate of correction.

Please complete this form and return with file, within **7** days to:
Certificates of Correction Branch - ST (South Tower) 9A22
Palm location **7590** - Tel. No. (703) 305-8309

With respect to the change(s) requested, correcting Office and/or Applicant's errors, should the patent read as shown in the certificate of correction? No new matter should be introduced, nor should the scope or meaning of the claims be changed.

Thank You For Your Assistance **Certificates of Correction Branch**

The request for issuing the above-identified correction(s) is hereby:

Note your decision on the appropriated box.

☒ **Approved** All changes apply.

☐ **Approved in Part** Specify below which changes **do not** apply.

☐ **Denied** State the reasons for denial below.

Comments:

/ROBERT KIM/
Supervisory Patent Examiner.Art Unit 2881

UNITED STATES PATENT AND TRADEMARK OFFICE

Commissioner for Patents
United States Patent and Trademark Office
P.O. Box 1450
Alexandria, VA 22313-1450
www.uspto.gov

ROBERT J. HARTER
4233 CLIFFSIDE DRIVE
LA CROSSE, WI 54601

MAILED

JUN 18 2009

OFFICE OF PETITIONS

In re Reissue Application No. 11/073,395	:	
Filed: March 7, 2005	:	
Reissue Patent No. RE40,238	:	ON PETITION
Original Patent No. 6,856,253	:	
Original Issue Date: February 15, 2005	:	
Title: PERSONAL HYDROGEN SULFIDE GAS ALARM SYSTEM		

This is a decision in response to a petition filed April 21, 2009, under 37 CFR 1.378(c), to accept the unintentionally delayed payment of a maintenance fee for the above-identified patent. This is also a decision under 37 CFR 1.182, filed April 24, 2009, to expedite the petition under 37 CFR 1.378(c).

The petition under 1.378(c) is **GRANTED**.

The petition under 1.182 to expedite is **GRANTED**.

This patent expired on February 16, 2009 for failure to pay the 3 ½ year maintenance fee. Since this petition was submitted within twenty-four months after the six-month grace period provided in 37 CFR 1.362(e), the petition was timely filed under the provisions of 37 CFR 1.378(c).

The maintenance fee is hereby accepted and the above-identified patent is reinstated as of the mail date of this decision.

The patent file is being forwarded to Files Repository.

Telephone inquiries concerning this decision should be directed to the undersigned at (571) 272-6059.

A. Kelley

Alicia Kelley
Petitions Examiner
Office of Petitions

UNITED STATES PATENT AND TRADEMARK OFFICE

Commissioner for Patents
United States Patent and Trademark Office
P.O. Box 1450
Alexandria, VA 22313-1450
www.uspto.gov

GENERAL ELECTRIC COMPANY
GLOBAL RESEARCH
PATENT DOCKET RM. BLDG. K1-4A59
NISKAYUNA NY 12309

COPY MAILED
SEP 29 2008
OFFICE OF PETITIONS

In re Application of
McLaughlin, et al.
Application No. 11/073,406
Filed: March 4, 2005
Attorney Docket No. 156938

DECISION ON PETITION
UNDER 37 CFR 1.78(a)(3)

This is a decision on the petition under 37 CFR 1.78(a)(3), filed July 15, 2008, to accept an unintentionally delayed claim under 35 U.S.C. §120 for the benefit of priority to the prior-filed nonprovisional application set forth in the concurrently filed amendment.

The petition is **DISMISSED.**

A petition for acceptance of a claim for late priority under 37 CFR 1.78(a)(3) is only applicable to those applications filed on or after November 29, 2000. Further, the petition is appropriate only after the expiration of the period specified in 37 CFR 1.78(a)(2)(ii). In addition, the petition under 37 CFR 1.78(a)(3) must be accompanied by:

(1) the reference required by 35 U.S.C. § 120 and 37 CFR 1.78(a)(2)(i) of the prior-filed application, unless previously submitted;
(2) the surcharge set forth in § 1.17(t); and
(3) a statement that the entire delay between the date the claim was due under 37 CFR 1.78(a)(2)(ii) and the date the claim was filed was unintentional. The Director may require additional information where there is a question whether the delay was unintentional.

The petition does not comply with item (1).

37 CFR 1.78(a)(2)(i) requires that any nonprovisional application claiming the benefit of one or more prior-filed copending nonprovisional applications must contain or be amended to contain a reference to each such prior-filed application, identifying it by application number (consisting of the series code and serial number) and indicating the relationship of the applications. The relationship between the applications is whether the subject application is a continuation, divisional, or continuation-in-part of a prior-filed nonprovisional application. An example of a proper benefit claim is: "This application is a continuation of Application No. 10/---, filed---." A benefit claim that merely states: "This application claims the benefit of Application No. 10/---, filed---," does not comply with 37 CFR 1.72(a)(2)(i) since the proper relationship, which includes the type of continuing application, is not stated. Also, the status of each nonprovisional

parent application (if it is patented or abandoned) should also be indicated, following the filing date of the parent nonprovisional application. *See* MPEP Section 201.11, Reference to Prior Nonprovisional Applications.

The instant petition is not accompanied by an amendment or application data sheet in compliance with 37 CFR 1.78(a)(2)(i).

Before the petition under 37 CFR § 1.78(a)(3) can be granted, a renewed petition under 37 CFR § 1.78(a)(3) and Application Data Sheet or a substitute amendment (complying with 37 CFR 1.121 and 37 CFR 1.76(b)(5)), which states the relationship of the prior-filed application to this application, are required.

Further correspondence with respect to this matter should be addressed as follows:

By mail: Mail Stop PETITIONS
Commissioner for Patents
Post Office Box 1450
Alexandria, VA 22313-1450

By hand: Customer Service Window
Mail Stop Petitions
Randolph Building
401 Dulany Street
Alexandria, VA 22314

By fax: (571) 273-8300
ATTN: Office of Petitions

Any questions concerning this matter may be directed to Petitions Attorney Alesia M. Brown at (571) 272-3205.

Anthony Knight
Supervisor
Office of Petitions

UNITED STATES PATENT AND TRADEMARK OFFICE

Commissioner for Patents
United States Patent and Trademark Office
P.O. Box 1450
Alexandria, VA 22313-1450
www.uspto.gov

DELPHI TECHNOLOGIES, INC.
M/C 480-410-202
PO BOX 5052
TROY MI 48007

COPY MAILED

APR 23 2008

OFFICE OF PETITIONS

In re Application of :
Hawes et al. :
Application No. 11/073,438 : DECISION ON PETITION
Filed: 03/07/05 :
Attorney Docket No. DP-312707 :

This is decision on the "REQUEST TO WITHDRAW NOTICE OF ABANDONMENT OR, IN THE ALTERNATIVE, PETITION TO REVIVE APPLICATION," filed February 25, 2008.

The petition under 37 CFR 1.181 is **DISMISSED**.

The petition under 37 CFR 1.137(b) is **GRANTED**.

The application became abandoned for failure to reply in a timely manner to the Restriction Requirement, mailed July 26, 2007, which set a extendable period one (1) month or thirty (30) days (whichever is later) for reply. In the absence of a timely filed reply, the application became abandoned on August 27, 2007. On January 24, 2008, the Office mailed a Notice of Abandonment.

Petition under 37 CFR 1.181

Petitioners asserted that they submitted a timely response to the Restriction Requirement, bearing a certificate of mailing date of August 24, 2007. Petitioners provided a copy of the reply with the present petition.

Pursuant to 37 CFR 1.8(b):

> In the event that correspondence is considered timely filed by being mailed or transmitted in accordance with paragraph (a) of this section, but not received in the U.S. Patent and Trademark Office after a reasonable amount of time has elapsed from the time of mailing or transmitting of the correspondence, or after the application is held to be abandoned, or after the proceeding is dismissed, terminated,

or decided with prejudice, the correspondence will be considered timely if the party who forwarded such correspondence:

(1) Informs the Office of the previous mailing or transmission of the correspondence promptly after becoming aware that the Office has no evidence of receipt of the correspondence;

(2) Supplies an additional copy of the previously mailed or transmitted correspondence and certificate; and

(3) Includes a statement which attests on a personal knowledge basis or to the satisfaction of the Director to the previous timely mailing or transmission. If the correspondence was sent by facsimile transmission, a copy of the sending unit's report confirming transmission may be used to support this statement. If the correspondence was transmitted via the Office electronic filing system, a copy of an acknowledgment receipt generated by the Office electronic filing system confirming submission may be used to support this statement.

The petition does not satisfy requirement (3).

The Office notes:

Where a certificate of mailing under 37 CFR 1.8, but not a postcard receipt, is relied upon in a petition to withdraw the holding of abandonment, see 37 CFR 1.8(b) and MPEP § 512. As stated in 37 CFR 1.8(b)(3) the statement that attests to the previous timely mailing or transmission of the correspondence must be on a personal knowledge basis, or to the satisfaction of the Director of the USPTO. If the statement attesting to the previous timely mailing is not made by the person who signed the Certificate of Mailing (i.e., there is no personal knowledge basis), then the statement attesting to the previous timely mailing should include evidence that supports the conclusion that the correspondence was actually mailed (e.g., copies of a mailing log establishing that correspondence was mailed for that application). When the correspondence is shown to have been timely filed based on a certificate of mailing, the correspondence is entered into PALM with the actual date of receipt (i.e., the date that the duplicate copy of the papers was filed with the statement under 37 CFR 1.8).

MPEP 711.03(c)(I)(B). In this instance, petitioners did not submit a statement under 37 CFR 1.8(b)(3) by Katie Holmes, the person who signed the certificate of mailing, or provide any evidence to support the conclusion that the correspondence was mailed. Accordingly, the petition under 37 CFR 1.181 is **dismissed**.

Petition under 37 CFR 1.137(b)

The petition satisfies the requirements of 37 CFR 1.137(b) in that petitioners have supplied (1) the reply in the form of an Election; (2) an authorization to charge the Deposit Account for the petition fee; and (3) a proper statement of unintentional delay. Accordingly, the petition under 37 CFR 1.137(b) is **granted**.

The Office will charge the $1,540.00 petition fee to the Deposit Account as authorized.

This matter is being referred to Technology Center Art Unit 3616.

Telephone inquiries specific to this decision may be directed to the undersigned at (571) 272-3211. All other inquiries concerning either the examination procedures or status of the application should be directed to the Technology Center.

Christina Tartera Donnell

Christina Tartera Donnell
Senior Petitions Attorney
Office of Petitions

UNITED STATES PATENT AND TRADEMARK OFFICE

Commissioner for Patents
United States Patent and Trademark Office
P.O. Box 1450
Alexandria, VA 22313-1450
www.uspto.gov

JOHN M. HARRINGTON
KILPATRICK STOCKTON LLP
1001 WEST FOURTH STREET
WINSTON-SALEM NC 27101

COPY MAILED

APR 25 2008

OFFICE OF PETITIONS

In re Application of	:
Thomas C. Wallace	:
Application No. 11/073,443	: DECISION GRANTING PETITION
Filed: March 7, 2005	: UNDER 37 CFR 1.137(b)
Attorney Docket No. PIK-100	:

This is a decision on the petition under 37 CFR 1.137(b), filed August 27, 2007, to revive the above-identified application.

The petition is **GRANTED**.

The petition satisfies the conditions for revival pursuant to the provisions of 37 CFR 1.137(b) in that (1) the reply in the form of an amendment; (2) the petition fee; and (3) the required statement of unintentional delay have been received. Accordingly, the reply to the Nonfinal Rejection of June 13, 2006, is accepted as having been unintentionally delayed.

There is no indication that the person signing the instant petition was ever given a power of attorney or authorization of agent to prosecute the above-identified application. If the person signing the instant petition desires to receive future correspondence regarding this application, the appropriate power of attorney or authorization of agent must be submitted. While a courtesy copy of this decision is being mailed to the person signing the instant petition, all future correspondence will be directed to the address currently of record until such time as appropriate instructions are received to the contrary.

Telephone inquiries concerning this decision should be directed to the undersigned at (571) 272-3208.

This matter is being referred to Technology Center AU 3673 to consider the reply received August 27, 2007.

Karen Creasy

Karen Creasy
Petitions Examiner
Office of Petitions

cc:

ERIC L. SOPHIR
607 14TH STREET, N.W., SUITE 900
WASHINGTON DC 20005

SPE RESPONSE FOR CERTIFICATE OF CORRECTION

Paper No.: _____

DATE : 11/12/09

TO SPE OF : ART UNIT 3644
SUBJECT : Request for Certificate of Correction for Appl. No 11/073446.: 7419124

Please respond to this request for a certificate of correction within 7 days.

FOR IFW FILES:

Please review the requested changes/corrections as shown in the **COCIN** document(s) in the IFW application image. No new matter should be introduced, nor should the scope or meaning of the claims be changed.

Please complete the response (see below) and forward the completed response to scanning using document code **COCX**.

FOR PAPER FILES:

Please review the requested changes/corrections as shown in the attached certificate of correction. Please complete this form (see below) and forward it with the file to:

Certificates of Correction Branch (CofC)

Should the change(s) Be made?

RoChaun Johnson
Certificates of Correction Branch
571 272-0470

Thank You For Your Assistance

The request for issuing the above-identified correction(s) is hereby:
Note your decision on the appropriate box.

❑ **Approved**	**All** changes apply.
X Approved in Part	Specify below which changes **do not** apply.
❑ **Denied**	State the reasons for denial below.

Comments: DENIED changing item (54) cover page; Denied col 1, lines 1 – 2. The title was changed for a description more consistent with the claimed subject matter.

SPE

3644
Art Unit

UNITED STATES PATENT AND TRADEMARK OFFICE

Commissioner for Patents
United States Patent and Trademark Office
P.O. Box 1450
Alexandria, VA 22313-1450
www.uspto.gov

HARNESS, DICKEY & PIERCE, P.L.C.
P.O. BOX 828
BLOOMFIELD HILLS MI 48303

COPY MAILED
AUG 0 7 2006
OFFICE OF PETITIONS

In re Application of	:	
Allen	:	
Application No. 11/073,491	:	DECISION ON PETITION
Filed: March 4, 2005	:	TO WITHDRAW
Attorney Docket No. 2646-000004	:	FROM RECORD
	:	

This is a decision on the Request to Withdraw as attorney or agent of record under 37 C.F.R. § 1.36(b), filed February 2, 2006.

The request is **NOT APPROVED**.

A grantable request to withdraw as attorney/agent of record must be signed by every attorney/agent seeking to withdraw or contain a clear indication that one attorney is signing on behalf of another/others. A request to withdraw will not be approved unless at least 30 (thirty) days would remain between the date of approval and the later of the expiration date of a time to file a response or the expiration date of the maximum time period which can be extended under 37 C.F.R. § 1.136(a).

The Office cannot approve the request at this time since the reasons provided do not meet any of the conditions under the mandatory or permissive categories enumerated in 37 CFR 10.40. Section 10.40 of Title 37 of the Code of Federal Regulation states, "[a] practitioner shall not withdraw from employment in a proceeding before the Office without permission from the Office[.]" More specifically, 37 CFR 10.40 states, "[i]f paragraph (b) of this section is not applicable, a practitioner may not request permission to withdraw in matter pending before the Office unless such request or such withdrawal is" for one the permissive reasons listed in 37 CFR 10.40(c). The reasons set forth in the request, "the attorney/agents associated with customer number 27572 no longer represent the inventor in this matter", does not meet any the conditions set forth in 37 CFR 10.40.

All future communications from the Office will continue to be directed to the above-listed address until otherwise notified by applicant.

Telephone inquiries concerning this decision should be directed to April Wise at 571-272-1642.

Denise Pothier
Petitions Examiner
Office of Petitions

cc: RZI, Inc. / David M. Allen
PO Box 1918
Brighton, MI 48116

UNITED STATES PATENT AND TRADEMARK OFFICE

Commissioner for Patents
United States Patent and Trademark Office
P.O. Box 1450
Alexandria, VA 22313-1450
www.uspto.gov

HARNESS, DICKEY & PIERCE, P.L.C.
P.O. BOX 828
BLOOMFIELD HILLS, MI 48303

COPY MAILED

MAR 2 2 2007

OFFICE OF PETITIONS

In re Application of	:	
David M. Allen	:	
Application No. 11/073,491	:	DECISION ON PETITION
Filed: March 4, 2005	:	TO WITHDRAW
Attorney Docket No. 2646-000004	:	FROM RECORD
	:	

This is a decision on the Request to Withdraw as attorney or agent of record under 37 C.F.R. § 1.36(b) filed August 16, 2006.

The request is **DISMISSED** as moot.

A review of the file record indicates that the power of attorney to Harness, Dickey & Pierce, PLC has been revoked by the applicant of the patent application on November 7, 2006. Accordingly, the request to withdraw under 37 C.F.R. § 1.36(b) is moot.

All future communications from the Office will continue to be directed to the below-listed address until otherwise notified by applicant.

Telephone inquires concerning this decision should be directed to undersigned at 571-272-1642.

April M. Wise
Petitions Examiner
Office of Petitions

UNITED STATES PATENT AND TRADEMARK OFFICE

Commissioner for Patents
United States Patent and Trademark Office
P.O. Box 1450
Alexandria, VA 22313-1450
www.uspto.gov

William P. Glenn, Jr.
Suite 205
2102 Mechanic Street
Galveston TX 77550

COPY MAILED

FEB 1 1 2008

OFFICE OF PETITIONS

In re Application of :
Zhang, et al. :
Application No. 11/073,502 :
Filed: March 4, 2005 :
Attorney Docket No. 03895.52354 :
For: MULTIFUNCTION MIRROR DISPLAY

ON PETITION

This is a decision on the petition under 37 CFR 1.137(b), filed November 30, 2007 (certificate of mailing date November 21, 2007), to revive the above-identified application.

The petition under 37 CFR 1.137(b) is **GRANTED**.

This application became abandoned for failure to timely reply to the Restriction Requirement, mailed April 17, 2007, which set a one month shortened statutory period for reply. No proper extensions of time having been obtained pursuant to 37 CFR 1.136(a) and no reply being received in the Office, this application became abandoned on May 18, 2007. A Notice of Abandonment was mailed on September 21, 2007.

Applicants have submitted a proper reply to the Restriction Requirement in the form of an election, a proper statement of the unintentional nature of the delay in responding to the Restriction Requirement, and the $770.00 petition fee. Accordingly, the petition under 37 CFR 1.137(b) is granted.

Regarding finances, pursuant to 37 CFR 1.136, an extension of time must be filed prior to the expiration of the maximum period obtainable for reply to avoid abandonment. Accordingly, since the $1115.00 extension of time submitted with the petition was submitted subsequent to the maximum period obtainable for reply, this fee is unnecessary and will be credited to petitioners' deposit account.

After the mailing of this decision, the file will be returned to Technology Center G.A.U. 2875 for consideration of the election filed on November 30, 2007 (certificate of mailing date November 21, 2007).

Telephone inquiries concerning this matter may be directed to the undersigned at (571) 272-3230.

Shirene Willis Brantley

Shirene Willis Brantley
Senior Petitions Attorney
Office of Petitions

UNITED STATES PATENT AND TRADEMARK OFFICE

Commissioner for Patents
United States Patent and Trademark Office
P.O. Box 1450
Alexandria, VA 22313-1450
www.uspto.gov

MAILED

JUL 17 2009

OFFICE OF PETITIONS

ISHMAN LAW FIRM PC
PO BOX 1297
HOLLY SPRINGS NC 27540-1297

In re Application of	:	
James F. McNulty, Jr.	:	
Application No. 11/073,507	:	ON PETITION
Filed: March 7, 2005	:	
Attorney Docket No. 8173-04-09	:	

This is a decision on the petition to revive under 37 CFR 1.137(b), filed May 27, 2009.

The petition under 37 CFR 1.137(b) is **GRANTED**.

The above-identified application became abandoned for failure to timely file a reply in response to the non-final Office action mailed July 12, 2007. This Notice set a shortened statutory period for reply of three months. No reply having been received, the application became abandoned on October 13, 2007. A Notice of Abandonment was mailed on January 24, 2008.

With the instant petition, applicant made the proper statement of unintentional delay, paid the petition fee, and submitted the required reply in the form of an Amendment.

It is not apparent whether the person signing the statement of unintentional delay was in a position to have firsthand or direct knowledge of the facts and circumstances of the delay at issue. Nevertheless, such statement is being treated as having been made

as the result of a reasonable inquiry into the facts and circumstances of such delay. See 37 CFR 10.18(b) and Changes to Patent Practice and Procedure; Final Rule Notice, 62 Fed. Reg. 53131, 53178 (October 10, 1997), 1203 Off. Gaz. Pat. Office 63, 103 (October 21, 1997). In the event that such an inquiry has not been made, petitioner must make such an inquiry. If such inquiry results in the discovery that it is not correct that the entire delay in filing the required reply from the due date for the reply until the filing of a grantable petition pursuant to 37 CFR 1.137(b) was unintentional, petitioner must notify the Office.

The application is being forwarded to Group Art Unit 3641 for consideration of the Amendment, filed May 27, 2009.

Telephone inquiries related to this decision should be directed to the undersigned at (571)272-3207.

Cliff Congo
Petitions Attorney
Office of Petitions

UNITED STATES PATENT AND TRADEMARK OFFICE

Commissioner for Patents
United States Patent and Trademark Office
P.O. Box 1450
Alexandria, VA 22313-1450
www.uspto.gov

IP GROUP OF DLA PIPER US LLP
ONE LIBERTY PLACE
1650 MARKET STREET, SUITE 4900
PHILADELPHIA, PA 19103

COPY MAILED

NOV 06 2007

OFFICE OF PETITIONS

In re Application of	:	
GIRSH, Leonard S.	:	
Application No. 11/073,514	:	DECISION ON PETITION
Filed: March 7, 2005	:	TO WITHDRAW
Attorney Docket No. **IPI-05-1042R**	:	FROM RECORD
	:	

This is a decision on the Request to Withdraw as attorney or agent of record under 37 C.F.R. § 1.36(b), filed May 10, 2007.

The request is **NOT APPROVED** as moot.

A review of the file record indicates that the power of attorney to **IP GROUP OF DLA PIPER US LLP** has been revoked by the applicant of the patent application on July 18, 2007. Accordingly, the request to withdraw under 37 C.F.R. § 1.36(b) is moot.

All future communications from the Office will continue to be directed to the below-listed address until otherwise notified by applicant.

Telephone inquires concerning this decision should be directed to the undersigned at 571-272-7253.

Monica A. Graves
Petitions Examiner
Office of Petitions

cc: **SALIWANCHIK LLOYD & SALIWANCHIK**
A PROFESSIONAL ASSOCIATION
P.O. BOX 142950
GAINESVILLE, FL 32614-2950

UNITED STATES PATENT AND TRADEMARK OFFICE

Commissioner for Patents
United States Patent and Trademark Office
P.O. Box 1450
Alexandria, VA 22313-1450
www.uspto.gov

WALL MARJAMA & BILINSKI
101 SOUTH SALINE STREET, SUITE 400
SYRACUSE, NY 13202

COPY MAILED

AUG 0 1 2006

OFFICE OF PETITIONS

In re Application of	:
James A. Parker et al	:
Application No. 11/073,531	: DECISION GRANTING PETITION
Filed: March 7, 2005	: UNDER 37 CFR 1.313(c)(2)
Attorney Docket No. 283-205.07	:

This is a decision on the petition, filed July 24, 2006, under 37 CFR 1.313(c)(2) to withdraw the above-identified application from issue after payment of the issue fee.

The petition is **GRANTED**.

The above-identified application is withdrawn from issue for consideration of a submission under 37 CFR 1.114 (request for continued examination). See 37 CFR 1.313(c)(2).

Petitioner is advised that the issue fee paid on May 12, 2006 in the above-identified application cannot be refunded. If, however, the above-identified application is again allowed, petitioner may request that it be applied towards the issue fee required by the new Notice of Allowance.[1]

Telephone inquiries should be directed to the undersigned at (571) 272-3218.

This matter is being referred to Technology Center AU 2876 for processing of the request for continued examination under 37 CFR 1.114 and for consideration of the concurrently filed amendment and Information Disclosure Statement.

Frances Hicks
Petitions Examiner
Office of Petitions

C:\Documents and Settings\FHicks\My Documents\470\july9\073531.wpd

---

[1] *The request to apply the issue fee to the new Notice may be satisfied by completing and returning the new Part B – Fee(s) Transmittal Form (along with any balance due at the time of submission), which includes the following language thereon: "The Director of the USPTO is requested to apply the Issue Fee and Publication Fee (if any) or to re-apply any previously paid issue fee in the application identified above. Petitioner is advised that, whether a fee is indicated as being due or not, the Issue Fee Transmittal Form* ***must*** *be completed and timely submitted to avoid abandonment. Note the language in bold text on the first page of the Notice of Allowance and Fee(s) Due (PTOL-85).*

UNITED STATES PATENT AND TRADEMARK OFFICE

Commissioner for Patents
United States Patent and Trademark Office
P.O. Box 1450
Alexandria, VA 22313-1450
www.uspto.gov

MARJAMA & BILINSKI LLP
250 SOUTH CLINTON STREET
SUITE 300
SYRACUSE NY 13202

COPY MAILED

MAR 0 2 2007

OFFICE OF PETITIONS

ON PETITION

In re Application of :
James A. Parker et al :
Application No. 11/073,531 :
Filed: March 7, 2005 :
Attorney Docket No. 283-205.07 :

This is a decision on the petition, filed February 26, 2007, under 37 CFR 1.313(c)(2) to withdraw the above-identified application from issue after payment of the issue fee.

The petition is **GRANTED**.

The above-identified application is withdrawn from issue for consideration of a submission under 37 CFR 1.114 (request for continued examination). See 37 CFR 1.313(c)(2).

Petitioner is advised that the issue fee paid on December 13, 2006 in the above-identified application cannot be refunded. If, however, the above-identified application is again allowed, petitioner may request that it be applied towards the issue fee required by the new Notice of Allowance.[1]

Telephone inquiries should be directed to the undersigned at (571) 272-3208.

The examiner of Technology Center AU 2876 will consider the request for continued examination under 37 CFR 1.114.

Karen Creasy

Karen Creasy
Petitions Examiner
Office of Petitions

---

[1] The request to apply the issue fee to the new Notice may be satisfied by completing and returning the new Issue Fee Transmittal Form PTOL-85(b), which includes the following language thereon: "Commissioner for Patents is requested to apply the Issue Fee and Publication Fee (if any) or re-apply any previously paid issue fee to the application identified above." Petitioner is advised that, whether a fee is indicated as being due or not, the Issue Fee Transmittal Form **must** be completed and timely submitted to avoid abandonment. Note the language in bold text on the first page of the Notice of Allowance and Fee(s) Due (PTOL-85).

UNITED STATES PATENT AND TRADEMARK OFFICE

Commissioner for Patents
United States Patent and Trademark Office
P.O. Box 1450
Alexandria, VA 22313-1450
www.uspto.gov

MARJAMA MULDOON BLASIAK & SULLIVAN LLP
250 SOUTH CLINTON STREET
SUITE 300
SYRACUSE, NY 13202

COPY MAILED

AUG 09 2007

OFFICE OF PETITIONS

In re Application of	:	
James A. Parker et al	:	
Application No. 11/073,531	:	DECISION GRANTING PETITION
Filed: March 7, 2005	:	UNDER 37 CFR 1.313(c)(2)
Attorney Docket No. 283-205.07	:	

This is a decision on the petition, filed August 7, 2007, under 37 CFR 1.313(c)(2) to withdraw the above-identified application from issue after payment of the issue fee.

The petition is **GRANTED**.

The above-identified application is withdrawn from issue for consideration of a submission under 37 CFR 1.114 (request for continued examination). See 37 CFR 1.313(c)(2).

Petitioner is advised that the issue fee paid on June 20, 2007 in the above-identified application cannot be refunded. If, however, the above-identified application is again allowed, petitioner may request that it be applied towards the issue fee required by the new Notice of Allowance.[1]

Telephone inquiries should be directed to the undersigned at (571) 272-3218.

This matter is being referred to Technology Center AU 2876 for processing of the request for continued examination under 37 CFR 1.114 and for consideration of the concurrently filed amendment and Information Disclosure Statement.

Frances Hicks
Petitions Examiner
Office of Petitions

C:\Documents and Settings\fhicks\My Documents\470\aug10\073531

---

[1] *The request to apply the issue fee to the new Notice may be satisfied by completing and returning the new Part B – Fee(s) Transmittal Form (along with any balance due at the time of submission). Petitioner is advised that the Issue Fee Transmittal Form **must** be completed and timely submitted to avoid abandonment.*

UNITED STATES PATENT AND TRADEMARK OFFICE

UNITED STATES DEPARTMENT OF COMMERCE
United States Patent and Trademark Office
Address: COMMISSIONER FOR PATENTS
P.O. Box 1450
Alexandria, Virginia 22313-1450
www.uspto.gov

SPRINT
6391 SPRINT PARKWAY
KSOPHT0101-Z2100
OVERLAND PARK, KS 66251-2100

Mail Date: 04/21/2010

Applicant	: Meghna N. Gandhi	: DECISION ON REQUEST FOR
Patent Number	: 7636322	: RECALCULATION of PATENT
Issue Date	: 12/22/2009	: TERM ADJUSTMENT IN VIEW
Appliction No	: 11/073,556	: OF WYETH AND NOTICE OF INTENT TO
Filed	: 03/07/2005	: ISSUE CERTIFICATE OF CORRECTION
		:

The Request for Recalculation is **GRANTED** to the extent indicated.

The patent term adjustment has been determined to be **1205** days. The USPTO will *sua sponte* issue a certificate of correction reflecting the amount of PTA days determined by the recalculation.

Prior to the issuance of the certificate of correction, the USPTO will afford patentee an opportunity to be heard and request reconsideration. Accordingly, patentee has **one month or thirty (30) days**, whichever is longer, to file a request for reconsideration of this patent term adjustment calculation. See 35 U.S.C. 154(b)(3)(B)(ii) and 37 CFR 1.322(a)(4). No extensions of time will be granted under 37 CFR 1.136.

Patentee should use document code PET.OP if electronically filing a request for reconsideration of this patent term adjustment calculation. The patentee must also include the information required by 37 CFR 1.705(b)(2) and the fee required by 37 CFR 1.18(e). If patentee does not file a timely request for reconsideration of this patent term adjustment calculation including the information required by 37 CFR 1.705(b)(2) and the fee required by 37 CFR 1.18(e), the USPTO will issue a certificate of correction reflecting the PTA determination noted above.

Patentee should be aware that in order to preserve the right to review in the United States District Court for the District of Columbia of the USPTO patent term adjustment determination, patentee must ensure that he or she also take the steps required under 35 U.S.C. 154(b)(4)(A) in a timely manner. Nothing in the request for recalculation should be construed as providing an alternative time frame for commencing a civil action under 35 U.S.C. 154(b)(4)(A).

Any questions concerning this decision should be directed to the Office of Patent Legal Administration at 571-272-7702.

UNITED STATES PATENT AND TRADEMARK OFFICE

Commissioner for Patents
United States Patent and Trademark Office
P.O. Box 1450
Alexandria, VA 22313-1450
www.uspto.gov

COPY MAILED
SEP 21 2006
OFFICE OF PETITIONS

Orum & Roth
53 West Jackson Blvd.
Chicago IL 60604

In re Application of	:	
Mitsuo Saito et al.	:	
Application No. 11/073,557	:	DECISION ON PETITION
Filed: March 7, 2005	:	TO WITHDRAW
Attorney Docket No. 14095	:	FROM RECORD
	:	

This is a decision on the Request to Withdraw as attorney or agent of record under 37 C.F.R. § 1.36(b), filed July 16, 2006.

The request is **APPROVED**.

A grantable request to withdraw as attorney/agent of record must be signed by every attorney/agent seeking to withdraw or contain a clear indication that one attorney is signing on behalf of another/others. A request to withdraw will not be approved unless at least 30 (thirty) days would remain between the date of approval and the later of the expiration date of a time to file a response or the expiration date of the maximum time period which can be extended under 37 C.F.R. § 1.136(a).

The request was signed by Catherine L. Glemrich attorney/agent of record on behalf of herself.

Catherine L. Glemrich has been withdrawn as attorney or agent of record; all other attorneys remain of record.

All future communications from the Office will continue to be directed to the above-listed address until otherwise properly notified by the applicant.

Telephone inquiries concerning this decision should be directed to Charles Smoot at 571-272-3299.

David Bucel
Petitions Examiner
Office of Petitions

SPE RESPONSE FOR CERTIFICATE OF CORRECTION

DATE : February 20, 2007 Jayprakash N. Gandhi Paper No.: _____

TO SPE OF : ART UNIT 2835

SUBJECT : Request for Certificate of Correction for Appl. No.: 11/073,576 Patent No.: 7,133,952

Please respond to this request for a certificate of correction within 7 days.

Please review the requested changes/corrections as shown in the **COCIN** document(s) in the IFW application image. No new matter should be introduced, nor should the scope or meaning of the claims be changed.

Please complete the response (see below) and forward the completed response to scanning using document code **COCX**.

Antonio Johnson
Certificates of Correction Branch
703-308-9390 ext. 111

Thank You For Your Assistance

The request for issuing the above-identified correction(s) is hereby:
Note your decision on the appropriate box.

- ☑ **Approved** — All changes apply.
- ☐ **Approved in Part** — Specify below which changes **do not** apply.
- ☐ **Denied** — State the reasons for denial below.

Comments: _____

JNGandhi
SPE

8/1/07
Art Unit

PTO/SB/ 44 (08-00)
Approved for use through 09/30/2000. OMB 0651-0033
U.S. Patent and Trademark Office; U.S. DEPARTMENT OF COMMERCE
Under the Paperwork Reduction Act of 1995, no persons are required to respond to a collection of information unless it displays a valid OMB control number.
(Also Form PTO-1050)

UNITED STATES PATENT AND TRADEMARK OFFICE

CERTIFICATE OF CORRECTION

PATENT NO: 7,113,395

DATED: September 26, 2006

INVENTOR(S): Yasushi HARA, et al.

Column 9, Line 2, change "that-said" to --said--

Column 9, Line 10, after "unit," insert --for--.

Column 9, Line 11, after "the" insert --vehicle--.

Column 9, Line 13, after "claim 1" insert --,--.

Column 9, Line 50, change "navagation" to --navigation--

Column 9, Line 51, change "secand" to --second--

Column 9, Line 55, change "claim 5," to --claim 4,--

Column 9, Line 63, change "claim 1," to --claim 7,--

Column 10, Line 7, insert --a-- before "key".

MAILING ADDRESS OF SENDER:
STAAS & HALSEY LLP
1201 New York Ave., N.W.
7th Floor
Washington, DC 20005

PATENT NO. 7,113,395

No. of add'l copies
@ 50¢ per page

⇨

JAN 1 6 2007

UNITED STATES PATENT AND TRADEMARK OFFICE

MAY - 9 2005

Commissioner for Patents
United States Patent and Trademark Office
P.O. Box 1450
Alexandria, VA 22313-1450
www.uspto.gov

Joseph V. Colaianni
PATTON BOGGS LLP
2550 M Street, NW
Washington DC 20037-1350

In re Application of	:
JOHN E. STAUFFER	:
Serial No.: 11/073623	: PETITION TO MAKE SPECIAL
Filed: March 8, 2005	:
Attorney Docket No.: 12421.106PTUS	:

This is in response to applicants' petition filed April 18, 2005, to make the above-identified application special under the provisions of 37 CFR 1.102(c), based on the age of the applicant. No fee is required for this petition.

Applicants have satisfied the provisions set forth in M.P.E.P. 708.02, IV. Therefore, the petition is **GRANTED**.

The application will be forwarded to the examiner for action on the merits commensurate with this decision.

Should there be any questions with regard to this letter please contact Marianne C. Seidel by letter addressed to the Director, Technology Center 1600, PO BOX 1450, ALEXANDRIA, VA 22313-1450, or by telephone at 571-272-0584 or by facsimile transmission to the general Office facsimile number.

Marianne C. Seidel
Special Program Examiner
Technology Center 1600

UNITED STATES PATENT AND TRADEMARK OFFICE

COMMISSIONER FOR PATENTS
UNITED STATES PATENT AND TRADEMARK OFFICE
P.O. BOX 1450
ALEXANDRIA, VA 22313-1450
www.uspto.gov

ROSENBERG, KLEIN & LEE
3458 ELLICOTT CENTER DRIVE-SUITE 101
ELLICOTT CITY, MD 21043

COPY MAILED

FEB 07 2007

OFFICE OF PETITIONS

In re Application of :
Kuo Chia Hsung, et al. :
Application No. 11/073,630 : ON PETITION
Filed: March 8, 2005 :
Attorney Docket No. MR1683-645 :

This is a decision on the petitions under 37 CFR 1.47(a) and 37 CFR 1.137(b) filed May 24, 2006.

The application became abandoned for failure to timely respond to a Notice to File Missing Parts mailed April 7, 2005. The notice required an oath or declaration under 37 CFR 1.63 and the surcharge as set forth in 37 CFR 1.16(e). A Notice of Abandonment was mailed on January 9, 2006. In response, on May 24, 2006, the present petitions were filed.

The petition under 37 CFR 1.47(a) is **GRANTED**.

The above-identified application and papers have been reviewed and found to be in compliance with 37 CFR 1.47(a). This application is hereby accorded Rule 1.47(a) status.

As provided in Rule 1.47(a), this Office will forward notice of this application's filing to the non-signing inventor at the address given in the Declaration. Notice of the filing of this application will also be published in the Official Gazette.

In view of the decision granting 1.47(a) status, the petition under 37 CFR 1.137(b) is **GRANTED**.

The application file is being returned to the Office of Initial Patent Examination for further Processing using the declaration executed by Chong Yang Fang and Kao Jui Huang on behalf of themselves and non-signing joint inventor Kuo Chia Hsung filed March 8, 2005.

Telephone inquires related to this decision should be directed to the undersigned at (571) 272-3204. Telephone inquiries related to Initial Patent Examination Division processing should be directed to their hotline at (703) 308-1202.

Sherry D. Brinkley
Petitions Examiner
Office of Petitions

UNITED STATES PATENT AND TRADEMARK OFFICE

UNITED STATES DEPARTMENT OF COMMERCE
United States Patent and Trademark Office
Address: COMMISSIONER FOR PATENTS
P.O. Box 1450
Alexandria, Virginia 22313-1450
www.uspto.gov

Pearl Cohen Zedek Latzer, LLP
1500 Broadway
12th Floor
New York, NY 10036

Mail Date: 04/21/2010

Applicant	: Arkady Glukhovsky	: DECISION ON REQUEST FOR
Patent Number	: 7618366	: RECALCULATION of PATENT
Issue Date	: 11/17/2009	: TERM ADJUSTMENT IN VIEW
Appliction No	: 11/073,633	: OF WYETH AND NOTICE OF INTENT TO
Filed	: 03/08/2005	: ISSUE CERTIFICATE OF CORRECTION
		:

The Request for Recalculation is **GRANTED** to the extent indicated.

The patent term adjustment has been determined to be **894** days. The USPTO will *sua sponte* issue a certificate of correction reflecting the amount of PTA days determined by the recalculation.

Prior to the issuance of the certificate of correction, the USPTO will afford patentee an opportunity to be heard and request reconsideration. Accordingly, patentee has **one month or thirty (30) days**, whichever is longer, to file a request for reconsideration of this patent term adjustment calculation. See 35 U.S.C. 154(b)(3)(B)(ii) and 37 CFR 1.322(a)(4). No extensions of time will be granted under 37 CFR 1.136.

Patentee should use document code PET.OP if electronically filing a request for reconsideration of this patent term adjustment calculation. The patentee must also include the information required by 37 CFR 1.705(b)(2) and the fee required by 37 CFR 1.18(e). If patentee does not file a timely request for reconsideration of this patent term adjustment calculation including the information required by 37 CFR 1.705(b)(2) and the fee required by 37 CFR 1.18(e), the USPTO will issue a certificate of correction reflecting the PTA determination noted above.

Patentee should be aware that in order to preserve the right to review in the United States District Court for the District of Columbia of the USPTO patent term adjustment determination, patentee must ensure that he or she also take the steps required under 35 U.S.C. 154(b)(4)(A) in a timely manner. Nothing in the request for recalculation should be construed as providing an alternative time frame for commencing a civil action under 35 U.S.C. 154(b)(4)(A).

Any questions concerning this decision should be directed to the Office of Patent Legal Administration at 571-272-7702.

UNITED STATES PATENT AND TRADEMARK OFFICE

UNITED STATES DEPARTMENT OF COMMERCE
United States Patent and Trademark Office
Address: COMMISSIONER FOR PATENTS
P.O. Box 1450
Alexandria, Virginia 22313-1450
www.uspto.gov

Pearl Cohen Zedek Latzer, LLP
1500 Broadway
12th Floor
New York, NY 10036

Mail Date: 05/18/2010

Applicant : Arkady Glukhovsky
Patent Number : 7618366
Issue Date : 11/17/2009
Application No : 11/073,633
Filed : 03/08/2005

: NOTICE CONCERNING IMPROPER
: CALCULATION OF PATENT TERM
: ADJUSTMENT BASED UPON USPTO
: IMPROPERLY MEASURING REDUCTION
: PERIOD UNDER 37 CFR 1.704(c)(10).

The United States Patent and Trademark Office (USPTO) discovered that in processing the recent recalculation decisions mailed in response to patentee's filed Request for Recalculation of Patent Term Adjustment in view of Wyeth, the USPTO improperly measured the reduction period for reductions under 37 CFR 1.704(c)(10). Pursuant to 37 CFR 1.704(c)(10), patentee's reduction begins on the date of filing the amendment under 37 CFR 1.312 ("1.312 amendment") or other related paper and ends on the date that the Office mails a response to the filing of the 1.312 amendment or other paper. It has been discovered that during the recalculation, the calculation failed to the limit the reduction to the mail date of the response to the 1.312 amendment or other paper. Accordingly, patentee's reductions were greater than warranted.

This notice **VACATES** the previous GRANTED request for recalculation and provides patentee with a revised GRANTED recalculation.

The patent term adjustment has been determined to be **990** days. The USPTO will *sua sponte* issue a certificate of correction reflecting the amount of patent term adjustment (PTA) days determined by the recalculation.

Prior to the issuance of the certificate of correction, the USPTO will afford patentee an opportunity to be heard and request reconsideration. Accordingly, patentee has **one month or thirty (30) days** from the mail date of this notice, whichever is longer, to file a request for reconsideration of this PTA calculation. See 35 U.S.C. § 154(b)(3)(B)(ii) and 37 CFR 1.322(a)(4).

Patentee should use document code PET.OP if electronically filing a request for reconsideration of this PTA calculation. The patentee must also include the information required by 37 CFR 1.705(b)(2), and the fee required by 37 CFR 1.18(e). If patentee does not file a timely request for reconsideration of this PTA calculation, including the information required by 37 CFR 1.705(b)(2) and the fee required by 37 CFR 1.18(e), the USPTO will issue a certificate of correction reflecting the PTA determination noted above.

Patentee should be aware that in order to preserve the right of review of the USPTO's PTA determination in the United States District Court for the District of Columbia, patentee must ensure that the steps required under 35 U.S.C. § 154 (b)(4) are taken in a timely manner. Nothing in the request for recalculation should be construed as providing an alternative time frame for commencing a civil action under 35 U.S.C. § 154(b)(4).

UNITED STATES PATENT AND TRADEMARK OFFICE

UNITED STATES DEPARTMENT OF COMMERCE
United States Patent and Trademark Office
Address: COMMISSIONER FOR PATENTS
P.O. Box 1450
Alexandria, Virginia 22313-1450
www.uspto.gov

BERESKIN AND PARR LLP/S.E.N.C.R.L., s.r.l.
40 KING STREET WEST
BOX 401
TORONTO, ON M5H 3Y2
CANADA

Mail Date: 05/07/2010

Applicant	: Neil P. Adams	: DECISION ON REQUEST FOR
Patent Number	: 7613304	: RECALCULATION of PATENT
Issue Date	: 11/03/2009	: TERM ADJUSTMENT IN VIEW
Application No	: 11/073,677	: OF WYETH AND NOTICE OF INTENT TO
Filed	: 03/08/2005	: ISSUE CERTIFICATE OF CORRECTION
		:

The Request for Recalculation is **GRANTED** to the extent indicated.

The patent term adjustment has been determined to be **980** days. The USPTO will *sua sponte* issue a certificate of correction reflecting the amount of PTA days determined by the recalculation.

Prior to the issuance of the certificate of correction, the USPTO will afford patentee an opportunity to be heard and request reconsideration. Accordingly, patentee has **one month or thirty (30) days**, whichever is longer, to file a request for reconsideration of this patent term adjustment calculation. See 35 U.S.C. 154(b)(3)(B)(ii) and 37 CFR 1.322(a)(4). No extensions of time will be granted under 37 CFR 1.136.

Patentee should use document code PET.OP if electronically filing a request for reconsideration of this patent term adjustment calculation. The patentee must also include the information required by 37 CFR 1.705(b)(2) and the fee required by 37 CFR 1.18(e). If patentee does not file a timely request for reconsideration of this patent term adjustment calculation including the information required by 37 CFR 1.705(b)(2) and the fee required by 37 CFR 1.18(e), the USPTO will issue a certificate of correction reflecting the PTA determination noted above.

Patentee should be aware that in order to preserve the right to review in the United States District Court for the District of Columbia of the USPTO patent term adjustment determination, patentee must ensure that he or she also take the steps required under 35 U.S.C. 154(b)(4)(A) in a timely manner. Nothing in the request for recalculation should be construed as providing an alternative time frame for commencing a civil action under 35 U.S.C. 154(b)(4)(A).

Any questions concerning this decision should be directed to the Office of Patent Legal Administration at 571-272-7702.

UNITED STATES PATENT AND TRADEMARK OFFICE

UNITED STATES DEPARTMENT OF COMMERCE
United States Patent and Trademark Office
Address: COMMISSIONER FOR PATENTS
P.O. Box 1450
Alexandria, Virginia 22313-1450
www.uspto.gov

YOUNG & THOMPSON
209 Madison Street
Suite 500
Alexandria, VA 22314

Mail Date: 04/20/2010

Applicant	: Jean-Laurent Auger	: DECISION ON REQUEST FOR
Patent Number	: 7590489	: RECALCULATION of PATENT
Issue Date	: 09/15/2009	: TERM ADJUSTMENT IN VIEW
Appliction No	: 11/073,706	: OF WYETH AND NOTICE OF INTENT TO
Filed	: 03/08/2005	: ISSUE CERTIFICATE OF CORRECTION
		:

The Request for Recalculation is **GRANTED** to the extent indicated.

The patent term adjustment has been determined to be **1130** days. The USPTO will *sua sponte* issue a certificate of correction reflecting the amount of PTA days determined by the recalculation.

Prior to the issuance of the certificate of correction, the USPTO will afford patentee an opportunity to be heard and request reconsideration. Accordingly, patentee has **one month or thirty (30) days**, whichever is longer, to file a request for reconsideration of this patent term adjustment calculation. See 35 U.S.C. 154(b)(3)(B)(ii) and 37 CFR 1.322(a)(4). No extensions of time will be granted under 37 CFR 1.136.

Patentee should use document code PET.OP if electronically filing a request for reconsideration of this patent term adjustment calculation. The patentee must also include the information required by 37 CFR 1.705(b)(2) and the fee required by 37 CFR 1.18(e). If patentee does not file a timely request for reconsideration of this patent term adjustment calculation including the information required by 37 CFR 1.705(b)(2) and the fee required by 37 CFR 1.18(e), the USPTO will issue a certificate of correction reflecting the PTA determination noted above.

Patentee should be aware that in order to preserve the right to review in the United States District Court for the District of Columbia of the USPTO patent term adjustment determination, patentee must ensure that he or she also take the steps required under 35 U.S.C. 154(b)(4)(A) in a timely manner. Nothing in the request for recalculation should be construed as providing an alternative time frame for commencing a civil action under 35 U.S.C. 154(b)(4)(A).

Any questions concerning this decision should be directed to the Office of Patent Legal Administration at 571-272-7702.

UNITED STATES PATENT AND TRADEMARK OFFICE

UNITED STATES DEPARTMENT OF COMMERCE
United States Patent and Trademark Office
Address: COMMISSIONER FOR PATENTS
P.O. Box 1450
Alexandria, Virginia 22313-1450
www.uspto.gov

MCDERMOTT WILL & EMERY LLP
600 13TH STREET, NW
WASHINGTON, DC 20005-3096

Mail Date: 05/03/2010

Applicant	: Yasufumi Shirakawa	: DECISION ON REQUEST FOR
Patent Number	: 7663200	: RECALCULATION of PATENT
Issue Date	: 02/16/2010	: TERM ADJUSTMENT IN VIEW
Application No	: 11/073,726	: OF WYETH AND NOTICE OF INTENT TO
Filed	: 03/08/2005	: ISSUE CERTIFICATE OF CORRECTION
		:

The Request for Recalculation is **GRANTED** to the extent indicated.

The patent term adjustment has been determined to be **810** days. The USPTO will *sua sponte* issue a certificate of correction reflecting the amount of PTA days determined by the recalculation.

Prior to the issuance of the certificate of correction, the USPTO will afford patentee an opportunity to be heard and request reconsideration. Accordingly, patentee has **one month or thirty (30) days**, whichever is longer, to file a request for reconsideration of this patent term adjustment calculation. See 35 U.S.C. 154(b)(3)(B)(ii) and 37 CFR 1.322(a)(4). No extensions of time will be granted under 37 CFR 1.136.

Patentee should use document code PET.OP if electronically filing a request for reconsideration of this patent term adjustment calculation. The patentee must also include the information required by 37 CFR 1.705(b)(2) and the fee required by 37 CFR 1.18(e). If patentee does not file a timely request for reconsideration of this patent term adjustment calculation including the information required by 37 CFR 1.705(b)(2) and the fee required by 37 CFR 1.18(e), the USPTO will issue a certificate of correction reflecting the PTA determination noted above.

Patentee should be aware that in order to preserve the right to review in the United States District Court for the District of Columbia of the USPTO patent term adjustment determination, patentee must ensure that he or she also take the steps required under 35 U.S.C. 154(b)(4)(A) in a timely manner. Nothing in the request for recalculation should be construed as providing an alternative time frame for commencing a civil action under 35 U.S.C. 154(b)(4)(A).

Any questions concerning this decision should be directed to the Office of Patent Legal Administration at 571-272-7702.

UNITED STATES PATENT AND TRADEMARK OFFICE

Commissioner for Patents
United States Patent and Trademark Office
P.O. Box 1450
Alexandria, VA 22313-1450
www.uspto.gov

HOWREY LLP
2941 FAIRVIEW PARK DRIVE, BOX 7
FALLS CHURCH, VA 22042

COPY MAILED

MAR 1 2 2007

OFFICE OF PETITIONS

In re Application of	:	
Edward M. Lobo et al	:	
Application No. 11/073,751	:	ON PETITION
Filed: March 8, 2005	:	
Attorney Docket No. PPC-106	:	

This is a decision on the petition filed September 25, 2006 under 37 CFR 1.137(b), to revive the above-identified application.

The petition is **GRANTED.**

The above-identified application became abandoned for failure to submit the Issue fee and Publication fee in a timely manner in reply to the Notice of Allowance mailed April 13, 2006, which set a statutory period for reply of three (3) months. Accordingly, the above-identified application became abandoned on July 14, 2006.

The petition satisfies the conditions for revival pursuant to the provisions of 37 CFR 1.137(b) in that (1) the reply in the form of payment of the Issue fee and Publication fee; (2) the petition fee; and (3) the required statement of unintentional delay have been received. Accordingly, the issue fee is accepted as having been unintentionally delayed.

Telephone inquiries concerning this decision should be directed to the undersigned at (571) 272-3210.

This matter is being referred to the Publishing Division for further processing.

Irvin Dingle
Petitions Examiner
Office of Petitions

UNITED STATES PATENT AND TRADEMARK OFFICE

Commissioner for Patents
United States Patent and Trademark Office
P.O. Box 1450
Alexandria, VA 22313-1450
www.uspto.gov

ROHM AND HAAS COMPANY
PATENT DEPARTMENT
100 INDEPENDENCE MALL WEST
PHILADELPHIA, PA 19106-2399

COPY MAILED

JUN 23 2005

OFFICE OF PETITIONS

In re Application of
Richard Bobrowolski, Liang Chen, Jay William Hinze and William Gerard Hager
Application No. 11/073,768
Filed: March 7, 2005
For: SURFACTANT-CONTAINING INSULATION BINDER

DECISION REFUSING STATUS UNDER 37 CFR 1.47(a)

This is in response to the "Petition Under 37 CFR 1.47(a)," filed April 13, 2005.

The petition is dismissed.

Rule 47 applicant is given TWO MONTHS from the mailing date of this decision to reply, correcting the below-noted deficiencies. Any reply should be entitled "Request for Reconsideration of Petition Under 37 CFR 1.47(a)," and should only address the deficiencies noted below, except that the reply may include an oath or declaration executed by the non-signing inventor. **FAILURE TO RESPOND WILL RESULT IN ABANDONMENT OF THE APPLICATION.** Any extensions of time will be governed by 37 CFR 1.136(a).

The above-identified application was filed on March 7, 2005 without a fully executed oath or declaration and naming Richard Bobrowolski, Liang Chen, Jay William Hinze and William Gerard Hager as joint inventors.

Accordingly, on March 30, 2005, a "Notice to File Missing Parts of Application" was mailed, requiring an executed oath or declaration, and a surcharge for its late filing.

In response, on April 13, 2005, the instant petition was filed.

A grantable petition under 37 CFR 1.47(a) requires:

(1) proof that the non-signing inventor cannot be reached or refuses to sign the oath or declaration after having been presented with the application papers (specification, claims and drawings);

(2) an acceptable oath or declaration in compliance with 35 U.S.C. §§ 115 and 116;

(3) the petition fee; and

(4) a statement of the last known address of the non-signing inventor.

Applicant lacks item (1), as set forth above.

As to item (1), applicant states, "On November 26, 2003, Applicant's representative sent a letter via facsimile and U.S. mail to Inger H. Eckert enclosing the instant application and filing papers." It is noted that applicant states Inger H. Eckert represents the non-signing inventors. While it appears that a copy of the application as filed was presented to the non-signing inventors, through their representative, applicant has not stated what, if any, response resulted from the November 26, 2003 mailing. There is no indication that the non-signing inventors did not respond to, or specifically refused, the request to join in the application after receiving the November 26, 2003 mailing. Furthermore, Applicant should specifically state whether the November 26, 2003 mailing included an oath of declaration for the above-identified application for the non-signing inventor's to sign.

Applicant should show that a copy of the application papers was presented to the non-signing inventors, but that they did not respond to, or refused, the request that they sign the oath/declaration in order to show that the inventors have refused to join in the application. The proof of the pertinent events should be made by a statement of someone with first hand knowledge of the events.

Further correspondence with respect to this matter should be addressed as follows:

By mail: Mail Stop Petition
Commissioner for Patents
Box 1450
Alexandria, VA 22313

By FAX: (703) 872-9306
Attn: Office of Petitions

By hand: Customer Service Window
Randolph Building
401 Dulany Street
Alexandria, VA 22314

Telephone inquiries related to this decision should be directed to the undersigned at (571) 272-3228.

Edward J. Tannouse
Petitions Attorney
Office of Petitions/Patent
United States Patent and Trademark Office

UNITED STATES PATENT AND TRADEMARK OFFICE

Commissioner for Patents
United States Patent and Trademark Office
P.O. Box 1450
Alexandria, VA 22313-1450
www.uspto.gov

THE PROCTER & GAMBLE COMPANY
INTELLECTUAL PROPERTY DIVISION - WEST BLDG.
WINTON HILL BUSINESS CENTER - BOX 412
6250 CENTER HILL AVENUE
CINCINNATI, OH 45224

COPY MAILED

JAN 23 2008

OFFICE OF PETITIONS

In re Application of :
SHERRY, et al. :
Application No. 11/073,815 :
Filed: March 07, 2005 :
Attorney Docket No. **7803C2** :

DECISION ON PETITION

This is a decision on the petition under 37 CFR 1.137(b), filed April 2, 2007, to revive the above-identified application.

The petition is **GRANTED**.

The application became abandoned for failure to reply in a timely manner to the non-final Office action mailed, April 21, 2006, which set a shortened statutory period for reply of three (3) months. No extensions of time under the provisions of 37 CFR 1.136(a) were obtained. Accordingly, the application became abandoned on July 22, 2006.

The petition satisfies the requirements of 37 CFR 1.137(b) in that petitioner has supplied (1) the reply in the form of an amendment; (2) the petition fee of $1500; and (3) an adequate statement of unintentional delay.

It is not apparent whether the person signing the statement of unintentional delay was in a position to have firsthand or direct knowledge of the facts and circumstances of the delay at issue. Nevertheless, such statement is being treated as having been made as the result of a reasonable inquiry into the facts and circumstances of such delay. See 37 CFR 10.18(b) and Changes to Patent Practice and Procedure; Final Rule Notice, 62 Fed. Reg. 53131, 53178 (October 10, 1997), 1203 Off. Gaz. Pat. Office 63, 103 (October 21, 1997). In the event that such an inquiry has not been made, petitioner must make such an inquiry. If such inquiry results in the discovery that it is not correct that the entire delay in filing the required reply from the due date for the reply until the filing of a grantable petition pursuant to 37 CFR 1.137(b) was unintentional, petitioner must notify the Office.

There is no indication that the person signing the petition was ever given a power of attorney to prosecute the application. If the person signing the petition desires to receive future correspondence regarding this application, the appropriate power of attorney document must be submitted. While a courtesy copy of this decision is being mailed to the person signing the petition, all future correspondence will be directed to the address currently of record until appropriate instructions are received.

Telephone inquiries concerning this decision should be directed to Monica A. Graves at (571) 272-7253.

The application file is being referred to Technology Center Art Unit 1751 for consideration of the amendment filed April 2, 2007

Sherry D. Brinkley
Petitions Examiner
Office of Petitions

cc: **DINSMORE & SHOHL, LLP**
1900 CHEMED CENTER
255 EAST FIFTH STREET
CINCINNATI, OHIO 45202

SPE RESPONSE FOR CERTIFICATE OF CORRECTION

Paper No.: _____

DATE : 12/09/09

TO SPE OF : ART UNIT 3762

SUBJECT : Request for Certificate of Correction for Appl. No.: 11073818 Patent No.: 7522956

Please respond to this request for a certificate of correction within 7 days.

FOR IFW FILES:

Please review the requested changes/corrections as shown in the **COCIN** document(s) in the IFW application image. No new matter should be introduced, nor should the scope or meaning of the claims be changed.

Please complete the response (see below) and forward the completed response to scanning using document code **COCX**.

FOR PAPER FILES:

Please review the requested changes/corrections as shown in the attached certificate of correction. Please complete this form (see below) and forward it with the file to:

Certificates of Correction Branch (C of C)
Randolph Square 9D40-D
Palm Location 7580

You can fax the Directors/SPE response to 571-270-9990

Lamonte Newsome
Certificates of Correction Branch
703-756-1574

Thank You For Your Assistance

The request for issuing the above-identified correction(s) is hereby:
Note your decision on the appropriate box.

- ☒ **Approved** — **All** changes apply.
- ☐ **Approved in Part** — Specify below which changes **do not** apply.
- ☐ **Denied** — State the reasons for denial below.

Comments: Approved as C 12/15/09

/Carl H. Layno/, SPE AU 3762 (Acting) 12/15/2009

SPE RESPONSE FOR CERTIFICATE OF CORRECTION

Paper No.: _____

DATE : 12/09/09

TO SPE OF : ART UNIT 3762

SUBJECT : Request for Certificate of Correction for Appl. No.: 11073818 Patent No.: 7522956

Please respond to this request for a certificate of correction within 7 days.

FOR IFW FILES:

Please review the requested changes/corrections as shown in the **COCIN** document(s) in the IFW application image. No new matter should be introduced, nor should the scope or meaning of the claims be changed.

Please complete the response (see below) and forward the completed response to scanning using document code **COCX**.

FOR PAPER FILES:

Please review the requested changes/corrections as shown in the attached certificate of correction. Please complete this form (see below) and forward it with the file to:

Certificates of Correction Branch (C of C)
Randolph Square 9D40-D
Palm Location 7580
You can fax the Directors SPE response to 571-270-9990

Lamonte Newsome
Certificates of Correction Branch
703-756-1574

Thank You For Your Assistance

The request for issuing the above-identified correction(s) is hereby:
Note your decision on the appropriate box.

- ☒ **Approved** — **All** changes apply.
- ☐ **Approved in Part** — Specify below which changes **do not** apply.
- ☐ **Denied** — State the reasons for denial below.

Comments: Approved 12/15/09

/Carl H. Layno/, SPE AU 3762 (Acting) 12/15/2009

UNITED STATES PATENT AND TRADEMARK OFFICE

Commissioner for Patents
United States Patent and Trademark Office
P.O. Box 1450
Alexandria, VA 22313-1450
www.uspto.gov

PARKS KNOWLTON, LLC
1117 PERIMETER CENTER WEST
SUITE E402
ATLANTA, GEORGIA 30338

MAILED

JAN 21 2010

OFFICE OF PETITIONS

In re Patent No. 7,460,954
Issued: December 2, 2008
Application No. 11/073,837
Filed: March 7, 2005
Attorney Docket Number: 99092C2

ON PETITION

This is a decision on the petition under 37 CFR 1.323 filed June 3, 2009 for a certificate of correction to correct the name of the assignee.

The petition is **DISMISSED**.

Assignment data printed on the patent is based solely on the information so supplied on the Issue Fee Transmittal Form (PTOL-85B). A review of the record indicates that the Issue Fee Transmittal Form (PTOL-85B) submitted October 6, 2008, failed to properly identify the assignee. However, the granting of a request under 37 CFR 3.81 (b)[1] is required to correct applicant's error providing incorrect or erroneous assignment data, before issuance of a Certificate of Correction, under 37 CFR 1.323 (see Manual of Patent Examining Procedures (M.P.E.P.) Chp.1400, sect. 1481). This procedure is required at any time after the issue fee is paid, including after issuance of the patent.

The instant petition was not submitted with a petition under 37 CFR 3.81(b), and fee, and thus cannot be granted.

Additionally, there is no indication that petitioner herein was ever empowered to handle matters related to this patent. If petitioner desires to receive future correspondence regarding this patent, the appropriate power of attorney documentation must be submitted. If the new power of attorney and/or change of address is signed by an assignee, the assignee must comply with the requirements of 37 CFR 3.73(b). This

---

[1]Any request for issuance of an application in the name of the assignee submitted after the date of the payment of the issue fee, and any request that a patent be corrected to state the name of assignee must:

(A) state the assignment was submitted for recordation as set forth in 37 CFR §3.11 before issuance of the patent;
(B) provide a request for a certificate of correction §1.323;
(C) provide the fee set forth in 37 CFR §1.20 (a) and
(D) provide the processing fee set forth in 37 CFR §1.17(i)

decision will be mailed to petitioner, however, all future correspondence will be mailed solely to the correspondence address of record.

Any request for reconsideration under 37 CFR 3.81(b) should be filed within **TWO MONTHS** of the date of this decision in order to be considered timely. This time period may not be extended pursuant to 37 CFR 1.136.

Further correspondence with respect to this matter should be addressed as follows:

By mail: Mail Stop Petitions
Commissioner for Patents
P.O. Box 1450
Alexandria, VA 22313-1450

By FAX: (571) 273-8300
Office of Petitions

Telephone inquiries regarding this decision should be directed to the undersigned Petitions Attorney at (571) 272-3212.

Patricia Faison-Ball

Patricia Faison-Ball
Senior Petitions Attorney
Office of Petitions

UNITED STATES PATENT AND TRADEMARK OFFICE

Commissioner for Patents
United States Patent and Trademark Office
P.O. Box 1450
Alexandria, VA 22313-1450
www.uspto.gov

WILMER CUTLER PICKERING
HALE AND DORR LLP
1875 PENNSYLVANIA AVE., NW
WASHINGTON DC 20004

COPY MAILED

AUG 2 1 2006

OFFICE OF PETITIONS

In re Application of	:	
Achacoso, et al.	:	
Application No. 11/073,852	:	DECISION ON PETITION
Filed: March 8, 2005	:	TO WITHDRAW
Attorney Docket No. 0286573.00121US2	:	FROM RECORD
	:	

This is a decision on the Request to Withdraw as attorney or agent of record under 37 C.F.R. § 1.36(b), filed February 3, 2006.

The request is **NOT APPROVED**.

A grantable request to withdraw as attorney/agent of record must be signed by every attorney/agent seeking to withdraw or contain a clear indication that one attorney is signing on behalf of another/others. A request to withdraw will not be approved unless at least 30 (thirty) days would remain between the date of approval and the later of the expiration date of a time to file a response or the expiration date of the maximum time period which can be extended under 37 C.F.R. § 1.136(a).

The Office cannot approve the request at this time since the reasons provided do not meet any of the conditions under the mandatory or permissive categories enumerated in 37 CFR 10.40. Section 10.40 of Title 37 of the Code of Federal Regulation states, "[a] practitioner shall not withdraw from employment in a proceeding before the Office without permission from the Office[.]" More specifically, 37 CFR 10.40 states, "[i]f paragraph (b) of this section is not applicable, a practitioner may not request permission to withdraw in matter pending before the Office unless such request or such withdrawal is" for one the permissive reasons listed in 37 CFR 10.40(c). The reasons set forth in the request, "assignee has failed to pay bills in a timely manner", do not meet any the conditions set forth in 37 CFR 10.40. Furthermore, there is no evidence of record in the application that the assignee has intervened, i.e. there is no 3.73(b) statement filed.

All future communications from the Office will continue to be directed to the above-listed address until otherwise notified by applicant.

Telephone inquiries concerning this decision should be directed to April Wise at 571-272-1642.

Amelia Au
Petitions Examiner
Office of Petitions

cc: Mr. Winthrop Baylies
Traceability System Architects, Inc.
2000 Commonwealth Avenue
Newton, MA 02481

UNITED STATES PATENT AND TRADEMARK OFFICE

Commissioner for Patents
United States Patent and Trademark Office
P.O. Box 1450
Alexandria, VA 22313-1450
www.uspto.gov

RABIN & BERDO, P.C.
SUITE 500
1101 14TH STREET
WASHINGTON, DC 20005

COPY MAILED

AUG 09 2006

OFFICE OF PETITIONS

In re Application of	:	
Akihiro Ishihara	:	
Application No. 11/073,855	:	ON PETITION
Filed: March 8, 2005	:	
Attorney Docket No. FUJI 152	:	

This is a decision on the petition under 37 CFR 1.137(b), filed January 18, 2006, to revive the above-identified application.

The petition is **GRANTED**.

The above-identified application became abandoned for failure submit the formal drawings in a timely manner in reply to the Notice of Allowance mailed July 14, 2005, which set a statutory period for reply of three (3) months. Accordingly, the above-identified application became abandoned on October 15, 2005.

Telephone inquiries concerning this decision should be directed to Irvin Dingle at (571) 272-3210.

This file is being forwarded to the Publishing Division to be reviewed by the drawing draftperson.

Irvin Dingle
Petitions Examiner
Office of Petitions

UNITED STATES PATENT AND TRADEMARK OFFICE

Commissioner for Patents
United States Patent and Trademark Office
P.O. Box 1450
Alexandria, VA 22313-1450
www.uspto.gov

BERT A MORGAN
355 BEAVER HEAD DRIVE
RONAN MT 59864

COPY MAILED

JAN 2 6 2007

OFFICE OF PETITIONS

In re Application of	:	
MORGAN, Bert Allen	:	
Application No. 11/073,885	:	DECISION ON PETITION
Filed: March 7, 2005	:	TO MAKE SPECIAL UNDER
Attorney Docket No.	:	37 CFR 1.102(c)(1)
	:	

This is a decision on the petition under 37 CFR 1.102(c)(1), to make the above-identified application special based on applicant's age as set forth in M.P.E.P. § 708.02, Section IV and under 37 CFR 1.102(d) to make the above-identified application special based on applicant's health as set forth in M.P.E.P § 708.02, Section III, filed December 19, 2006

The petition is **GRANTED**.

A grantable petition to make an application special under 37 CFR 1.102(c)(1) and MPEP § 708.02, Section IV: Applicant's Age, must be accompanied by evidence showing that at least one of the applicants is 65 years of age, or more, such as a birth certificate or a statement by applicant. No fee is required.

The instant petition includes the statement of inventor Bert A. Morgan, attesting to his age. Accordingly, the above-identified application has been accorded "special" status.

In view of the above petition being granted and the application being made special, the petition under 37 CFR 1.102(c)(1), Section III, is **DISMISSED AS MOOT**.

Telephone inquiries concerning this decision should be directed to the undersigned at 571-272-7253. All other inquiries concerning either the examination or status of the application should be directed to the Technology Center.

The application is being forwarded to the Technology Center Art Unit 3682 for action on the merits commensurate with this decision.

Monica A. Graves
Petitions Examiner
Office of Petitions

UNITED STATES PATENT AND TRADEMARK OFFICE

UNITED STATES DEPARTMENT OF COMMERCE
United States Patent and Trademark Office
Address: COMMISSIONER FOR PATENTS
P.O. Box 1450
Alexandria, Virginia 22313-1450
www.uspto.gov

Workman Nydegger
1000 Eagle Gate Tower
60 East South Temple
Salt Lake City, UT 84111

Mail Date: 04/21/2010

Applicant	: Gerald L. Dybesetter	: DECISION ON REQUEST FOR
Patent Number	: 7657186	: RECALCULATION of PATENT
Issue Date	: 02/02/2010	: TERM ADJUSTMENT IN VIEW
Appliction No	: 11/073,886	: OF WYETH AND NOTICE OF INTENT TO
Filed	: 03/07/2005	: ISSUE CERTIFICATE OF CORRECTION
		:

The Request for Recalculation is **GRANTED** to the extent indicated.

The patent term adjustment has been determined to be **939** days. The USPTO will *sua sponte* issue a certificate of correction reflecting the amount of PTA days determined by the recalculation.

Prior to the issuance of the certificate of correction, the USPTO will afford patentee an opportunity to be heard and request reconsideration. Accordingly, patentee has **one month or thirty (30) days**, whichever is longer, to file a request for reconsideration of this patent term adjustment calculation. See 35 U.S.C. 154(b)(3)(B)(ii) and 37 CFR 1.322(a)(4). No extensions of time will be granted under 37 CFR 1.136.

Patentee should use document code PET.OP if electronically filing a request for reconsideration of this patent term adjustment calculation. The patentee must also include the information required by 37 CFR 1.705(b)(2) and the fee required by 37 CFR 1.18(e). If patentee does not file a timely request for reconsideration of this patent term adjustment calculation including the information required by 37 CFR 1.705(b)(2) and the fee required by 37 CFR 1.18(e), the USPTO will issue a certificate of correction reflecting the PTA determination noted above.

Patentee should be aware that in order to preserve the right to review in the United States District Court for the District of Columbia of the USPTO patent term adjustment determination, patentee must ensure that he or she also take the steps required under 35 U.S.C. 154(b)(4)(A) in a timely manner. Nothing in the request for recalculation should be construed as providing an alternative time frame for commencing a civil action under 35 U.S.C. 154(b)(4)(A).

Any questions concerning this decision should be directed to the Office of Patent Legal Administration at 571-272-7702.

UNITED STATES PATENT AND TRADEMARK OFFICE

Commissioner for Patents
United States Patent and Trademark Office
P.O. Box 1450
Alexandria, VA 22313-1450
www.uspto.gov

MCDERMOTT WILL & EMERY LLP
600 13TH STREET, N.W.
WASHINGTON, DC 20005-3096

COPY MAILED

MAY 0 2 2008

OFFICE OF PETITIONS

In re Application of :
Kouichi Yamada :
Application No. 11/073,897 : ON PETITION
Filed: March 8, 2005 :
Attorney Docket No. 057810-0207

This is a decision on the petition, filed May 1, 2008 under 37 CFR 1.313(c)(2) to withdraw the above-identified application from issue after payment of the issue fee.

The petition is **GRANTED**.

The above-identified application is withdrawn from issue for consideration of a submission under 37 CFR 1.114 (request for continued examination). See 37 CFR 1.313(c)(2).

Petitioner is advised that the issue fee paid on April 14, 2008 in the above-identified application cannot be refunded. If, however, the above-identified application is again allowed, petitioner may request that it be applied towards the issue fee required by the new Notice of Allowance.[1]

Telephone inquiries should be directed to Irvin Dingle at (571) 272-3210.

This matter is being referred to Technology Center AU 2822 for processing of the request for continued examination under 37 CFR 1.114 and for consideration of the concurrently filed Information Disclosure Statement.

Irvin Dingle
Petitions Examiner
Office of Petitions

---

[1] The request to apply the issue fee to the new Notice may be satisfied by completing and returning the new Issue Fee Transmittal Form PTOL-85(b), which includes the following language thereon: Commissioner for Patents is requested to apply the Issue Fee and Publication Fee (if any) or re-apply any previously paid issue fee to the application identified above. Petitioner is advised that, whether a fee is indicated as being due or not, the Issue Fee Transmittal Form **must** be completed and timely submitted to avoid abandonment. Note the language in bold text on the first page of the Notice of Allowance and Fee(s) Due (PTOL-85).

UNITED STATES PATENT AND TRADEMARK OFFICE

Commissioner for Patents
United States Patent and Trademark Office
P.O. Box 1450
Alexandria, VA 22313-1450
www.uspto.gov

MCDERMOTT WILL & EMERY LLP
600 13TH STREET, N.W.
WASHINGTON DC 20005-3096

COPY MAILED

SEP 05 2008

In re Application of	:	
Kouichi Yamada	:	
Application No. 11/073,897	:	DECISION GRANTING PETITION
Filed: March 8, 2005	:	UNDER 37 CFR 1.313(c)(2)
Attorney Docket No. 057810-0207	:	

This is a decision on the petition under 37 CFR 1.313(c)(2), filed September 3, 2008, to withdraw the above-identified application from issue after payment of the issue fee.

The petition is **GRANTED**.

The above-identified application is withdrawn from issue for consideration of a submission under 37 CFR 1.114 (request for continued examination). *See* 37 CFR 1.313(c)(2).

Petitioner is advised that the issue fee paid on June 26, 2008 cannot be refunded. If, however, this application is again allowed, petitioner may request that it be applied towards the issue fee required by the new Notice of Allowance.[1]

Telephone inquiries should be directed to Terri Williams at (571) 272-2991.

This application is being referred to Technology Center AU 2822 for processing of the request for continued examination under 37 CFR 1.114 and for consideration of the concurrently filed information disclosure statement.

Terri Williams

Terri Williams
Petitions Examiner
Office of Petitions

---

[1] *The request to apply the issue fee to the new Notice may be satisfied by completing and returning the new Part B – Fee(s) Transmittal Form (along with any balance due at the time of submission). Petitioner is advised that the Issue Fee Transmittal Form must be completed and timely submitted to avoid abandonment of the application.*

UNITED STATES PATENT AND TRADEMARK OFFICE

Commissioner for Patents
United States Patent and Trademark Office
P.O. Box 1450
Alexandria, VA 22313-1450
www.uspto.gov

WOLF GREENFIELD (Microsoft Corporation)
C/O WOLF, GREENFIELD & SACKS, P.C.
FEDERAL RESERVE PLAZA
600 ATLANTIC AVENUE
BOSTON, MA 02210-2206

COPY MAILED

MAR 13 2006

OFFICE OF PETITIONS

In re Application of Hassan :
Application No. 11/073,901 :
Filing Date: March 7, 2005 :
Attorney Docket No. M1103.70111US00 :

Decision on Petition

This is a decision on the petition under 37 CFR 1.137(b), filed January 9, 2006, to revive the above-identified application.

The petition is **granted**.

The above-identified application became abandoned for failure to reply in a timely manner to the Notice to File Missing Parts of Application (Notice) mailed March 31, 2005. The Notice set a period for reply of two (2) months. No extensions of time under the provisions of 37 CFR 1.136(a) were obtained. Accordingly, the above-identified application became abandoned on July 1, 2006. A Notice of Abandonment was mailed on December 8, 2005.

The instant petition requests revival of the application.

Petitioner has met the requirements to revive the above-identified application pursuant to 37 CFR 1.137(b). Therefore, the petition is granted and the application is revived.

Petitioner submitted $1,000 for the filing fee, search fee, and examination fee. However, these fees had previously been charged to petitioner's deposit account on March 10, 2005. Therefore, the $1,000 was credited to petitioner's deposit account on January 10, 2006.

The Office of Initial Patent Examination will be informed of the instant decision so that it may complete preparing the application for examination.

Telephone inquiries regarding this communication should be directed to Petitions Attorney Steven Brantley at (571) 272-3203.

Charles Steven Brantley
Senior Petitions Attorney
Office of Petitions

UNITED STATES PATENT AND TRADEMARK OFFICE

Commissioner for Patents
United States Patent and Trademark Office
P.O. Box 1450
Alexandria, VA 22313-1450
www.uspto.gov

Orum & Roth LLC
53 W. Jackson Boulevard
Chicago IL 60604-3606

COPY MAILED

OCT 18 2006

OFFICE OF PETITIONS

In re Application of	:	
KOIKE, et al.	:	
Application No. 11/073,905	:	DECISION ON PETITION
Filed: March 07, 2005	:	TO WITHDRAW
Attorney Docket No. 14097	:	FROM RECORD
	:	

This is a decision on the Request to Withdraw as attorney or agent of record under 37 C.F.R. § 1.36(b), filed July 16, 2006.

The request is **APPROVED**.

A grantable request to withdraw as attorney/agent of record must be signed by every attorney/agent seeking to withdraw or contain a clear indication that one attorney is signing on behalf of another/others. A request to withdraw will not be approved unless at least 30 (thirty) days would remain between the date of approval and the later of the expiration date of a time to file a response or the expiration date of the maximum time period which can be extended under 37 C.F.R. § 1.136(a).

The request was signed by Catherine L. Gemrich.

Catherine L. Gemrich has been withdrawn as attorney or agent of record; all other attorneys remain of record.

The correspondence address of record remains unchanged.

There is no outstanding Office action that requires a reply from the applicant.

Telephone inquiries concerning this decision should be directed to Patricia Volpe at 571-272-6825.

David Bucci
Petitions Examiner
Office of Petitions

cc: Catherine Gemrich
Steelcase Development Corporation
6100 East Paris Avenue
Caledonia, MI 49501

UNITED STATES PATENT AND TRADEMARK OFFICE

UNITED STATES DEPARTMENT OF COMMERCE
United States Patent and Trademark Office
Address: COMMISSIONER FOR PATENTS
P.O. Box 1450
Alexandria, Virginia 22313-1450
www.uspto.gov

Vista IP Law Group LLP
2040 MAIN STREET, Suite 710
IRVINE, CA 92614

Mail Date: 04/21/2010

Applicant	: Paul DiCarlo	: DECISION ON REQUEST FOR
Patent Number	: 7601149	: RECALCULATION of PATENT
Issue Date	: 10/13/2009	: TERM ADJUSTMENT IN VIEW
Appliction No	: 11/073,917	: OF WYETH AND NOTICE OF INTENT TO
Filed	: 03/07/2005	: ISSUE CERTIFICATE OF CORRECTION
		:

The Request for Recalculation is **GRANTED** to the extent indicated.

The patent term adjustment has been determined to be **868** days. The USPTO will *sua sponte* issue a certificate of correction reflecting the amount of PTA days determined by the recalculation.

Prior to the issuance of the certificate of correction, the USPTO will afford patentee an opportunity to be heard and request reconsideration. Accordingly, patentee has **one month or thirty (30) days**, whichever is longer, to file a request for reconsideration of this patent term adjustment calculation. See 35 U.S.C. 154(b)(3)(B)(ii) and 37 CFR 1.322(a)(4). No extensions of time will be granted under 37 CFR 1.136.

Patentee should use document code PET.OP if electronically filing a request for reconsideration of this patent term adjustment calculation. The patentee must also include the information required by 37 CFR 1.705(b)(2) and the fee required by 37 CFR 1.18(e). If patentee does not file a timely request for reconsideration of this patent term adjustment calculation including the information required by 37 CFR 1.705(b)(2) and the fee required by 37 CFR 1.18(e), the USPTO will issue a certificate of correction reflecting the PTA determination noted above.

Patentee should be aware that in order to preserve the right to review in the United States District Court for the District of Columbia of the USPTO patent term adjustment determination, patentee must ensure that he or she also take the steps required under 35 U.S.C. 154(b)(4)(A) in a timely manner. Nothing in the request for recalculation should be construed as providing an alternative time frame for commencing a civil action under 35 U.S.C. 154(b)(4)(A).

Any questions concerning this decision should be directed to the Office of Patent Legal Administration at 571-272-7702.

UNITED STATES PATENT AND TRADEMARK OFFICE

UNITED STATES DEPARTMENT OF COMMERCE
United States Patent and Trademark Office
Address: COMMISSIONER FOR PATENTS
P.O. Box 1450
Alexandria, Virginia 22313-1450
www.uspto.gov

Snell & Wilmer L.L.P. (AMEX)
ONE ARIZONA CENTER
400 E. VAN BUREN STREET
PHOENIX, AZ 85004-2202

Mail Date: 04/23/2010

Applicant	: Peter Kirwan Bates	: DECISION ON REQUEST FOR
Patent Number	: 7604176	: RECALCULATION of PATENT
Issue Date	: 10/20/2009	: TERM ADJUSTMENT IN VIEW
Application No	: 11/073,918	: OF WYETH AND NOTICE OF INTENT TO
Filed	: 03/07/2005	: ISSUE CERTIFICATE OF CORRECTION
		:

The Request for Recalculation is **GRANTED** to the extent indicated.

The patent term adjustment has been determined to be **0** days. The USPTO will *sua sponte* issue a certificate of correction reflecting the amount of PTA days determined by the recalculation.

Prior to the issuance of the certificate of correction, the USPTO will afford patentee an opportunity to be heard and request reconsideration. Accordingly, patentee has **one month or thirty (30) days**, whichever is longer, to file a request for reconsideration of this patent term adjustment calculation. See 35 U.S.C. 154(b)(3)(B)(ii) and 37 CFR 1.322(a)(4). No extensions of time will be granted under 37 CFR 1.136.

Patentee should use document code PET.OP if electronically filing a request for reconsideration of this patent term adjustment calculation. The patentee must also include the information required by 37 CFR 1.705(b)(2) and the fee required by 37 CFR 1.18(e). If patentee does not file a timely request for reconsideration of this patent term adjustment calculation including the information required by 37 CFR 1.705(b)(2) and the fee required by 37 CFR 1.18(e), the USPTO will issue a certificate of correction reflecting the PTA determination noted above.

Patentee should be aware that in order to preserve the right to review in the United States District Court for the District of Columbia of the USPTO patent term adjustment determination, patentee must ensure that he or she also take the steps required under 35 U.S.C. 154(b)(4)(A) in a timely manner. Nothing in the request for recalculation should be construed as providing an alternative time frame for commencing a civil action under 35 U.S.C. 154(b)(4)(A).

Any questions concerning this decision should be directed to the Office of Patent Legal Administration at 571-272-7702.

UNITED STATES PATENT AND TRADEMARK OFFICE

Commissioner for Patents
United States Patent and Trademark Office
P.O. Box 1450
Alexandria, VA 22313-1450
www.uspto.gov

WHYTE HIRSCHBOECK DUDEK SC
555 EAST WELLS ST
SUITE 1900
MILWAUKEE WI 53202

COPY MAILED

DEC 01 2005

OFFICE OF PETITIONS

In re Application of	:	
Diendorf, et al.	:	DECISION ACCORDING STATUS
Application No. 11/073,924	:	UNDER 37 CFR 1.47(a)
Filed: March 7, 2005	:	
Attorney Docket No. 39,100-00	:	

This is in response to the petition under 37 CFR 1.47(a), filed October 11, 2005.

The petition under 37 CFR 1.47(a) is **GRANTED**.

The above-identified application was filed on March 7, 2005, without an executed oath or declaration. Accordingly, on April 12, 2005, the Initial Patent Examination Division mailed a Notice to File Missing Parts of Nonprovisional Application, requiring, *inter alia*, an executed oath or declaration, together with a surcharge for its late filing.

In reply, applicant filed the instant petition on October 11, 2005, made timely with a four month extension of time. Accompanying the petition was a declaration executed by inventors John R. Diendorf, James S. Wolsieffer, and Ronald E. Bolanowski, with the signature blocks for David Sean St. Leger-Andrews, John M. Schullian, and Christoper J. Weseloh left blank.

A grantable petition under 37 CFR 1.47(a) requires: (1) proof that the non-signing inventor(s) cannot be reached or refuses to sign the oath or declaration after having been presented with the application papers (specification, claims and drawings); (2) an acceptable oath or declaration in compliance with 37 CFR 1.63; (3) the petition fee; and (4) a statement of the last known address of the non-signing inventor(s).

On petition, Rule 47 applicant has included copies of cover letters dated May 4, 2005, transmitting the application papers to St. Leger-Andrews, Schullian, and Weseloh. According to Rule 47 applicant, no executed declaration from these inventors has been received.

On petition, Rule 47 applicant has satisfied the requirements of 37 CFR 1.47(a). The declaration submitted with the petition has been determined to be in compliance with 37 CFR 1.63. Accordingly, the above-identified application is hereby accorded Rule 1.47(a) status.

Pursuant to 37 CFR 1.47(c), this Office will forward notice of this application's filing to the last known addresses provided in the petition. Notice of the filing of this application will also be published in the Official Gazette.

The application file is being forwarded to Group Art Unit 2681 for docketing and examination in due course.

Telephone inquiries related to this decision may be directed to the undersigned at (571)272-3207.

Cliff Congo
Petitions Attorney
Office of Petitions

UNITED STATES PATENT AND TRADEMARK OFFICE

Commissioner for Patents
United States Patent and Trademark Office
P.O. Box 1450
Alexandria, VA 22313-1450
www.uspto.gov

SAUL EWING LLP (BALTIMORE)
ATTN: PATENT DOCKET CLERK
LOCKWOOD PLACE
500 EAST PRATT STREET, SUITE 900
BALTIMORE MD 21202

COPY MAILED

JUL 0 1 2009

OFFICE OF PETITIONS

In re Application of :

BRADFORD, Sherry A. :
Application No. 11/073,925 : DECISION ON PETITION
Filed: March 07, 2005 : TO WITHDRAW
Attorney Docket No. **356528.00001** : FROM RECORD

This is a decision on the Request to Withdraw as attorney or agent of record under 37 C.F.R. § 1.36(b), filed June 03, 2009.

The request is **APPROVED**.

A grantable request to withdraw as attorney/agent of record must be signed by every attorney/agent seeking to withdraw or contain a clear indication that one attorney is signing on behalf of another/others. The Office requires the practitioner(s) requesting withdrawal to certify that he, she, or they have: (1) given reasonable notice to the client, prior to the expiration of the response period, that the practitioner(s) intends to withdraw from employment; (2) delivered to the client or a duly authorized representative of the client all papers and property (including funds) to which the client is entitled; and (3) notified the client of any responses that may be due and the time frame within which the client must respond, pursuant 37 CFR 10.40(c).

The request was signed by Konstantina Katcheves on behalf of all attorneys of record who are associated with customer No. 74549. All attorneys/agents associated with the Customer Number 74549 have been withdrawn. Applicant is reminded that there is no attorney of record at this time.

All future correspondence will be directed to the inventor Sherry A. Bradford at the address indicated below.

Telephone inquiries concerning this decision should be directed to Tredelle Jackson at 571-272-2783.

Tredelle D. Jackson
Paralegal Specialist
Office of Petitions

cc: **SHERRY A. BRADFORD**
2490 W. OAKFIELD ROAD
GRAND ISLAND NY 14072

UNITED STATES PATENT AND TRADEMARK OFFICE

Commissioner for Patents
United States Patent and Trademark Office
P.O. Box 1450
Alexandria, VA 22313-1450
www.uspto.gov

NIXON & VANDERHYE, PC
901 NORTH GLEBE ROAD, 11TH FLOOR
ARLINGTON VA 22203

COPY MAILED

OCT 26 2005

OFFICE OF PETITIONS

In re Application of	:
Depraetere et al.	:
Application No. 11/073,942	: DECISION GRANTING PETITION
Filed: March 8, 2005	:
Attorney Docket No.2551-167	:
Title of Invention: HCV E1	:
COMPRISING SPECIFIC DISULFIDE	:
BRIDGES	:

This is a decision on the petition filed July 14, 2005, requesting in effect, that a Notice of Omitted Parts in a Nonprovisional Application ("Notice") mailed May 18, 2005, be withdrawn.

The application was filed on March 8, 2005. However, on May 18, 2005, the Office of Initial Patent Examination (OIPE) mailed a Notice of Omitted Items in a Nonprovisional Application"Notice" stating that the application had been accorded a filing date of March 8, 2005 and advising applicant that pages 35-38, 40 and 41 of the specification (description and claims) appeared to have been omitted.

In response, on July 14, 2005, applicants filed the present petition and a copy of applicants' postcard receipt acknowledging receipt of "58 pages of spec., claims & abstract (28 numbered claims)" on March 8, 2005. Additionally, applicant submitted a copy of pages 35-38, 40 and 41. Petitioner argues pages 35-38, 40 and 41 were submitted on March 8, 2005.

A review of the record shows that pages 35-38,40 and 41 are not amongst the papers filed on March 8, 2005.

Applicant's postcard receipt is prima facie evidence that 58 pages of specification, including pages 35-38,40 and 41 were received on March 8, 2005, but pages 35-38,40 and 41 of the specification

are not present in the file. Hence, it is clear that the papers for this application were mishandled by the Office. Therefore, it is concluded that pages 35-38,40 and 41 of the specification were received on March 8, 2005 as shown in counsel's file, and later misplaced in the office.

The petition is Granted. No petition fee is due.

Since pages 35-38,40 and 41 of the specification cannot be located in the Office, pages 35-38,40 and 41 96-105 of the specification supplied with the petition on July 14, 2005, will be used for processing and examination purposes.

The application will be returned to the Office of Initial Patent Examination for further processing with a filing date of March 8, 2005, using copy pages 35-38,40 and 41 of the specification supplied on July 14, 2005.

Any inquiries related to this decision should be directed to the undersigned at (571) 272-3215.

Charlema R. Grant

Charlema R. Grant
Petitions Attorney
Office of Petitions

UNITED STATES PATENT AND TRADEMARK OFFICE

Commissioner for Patents
United States Patent and Trademark Office
P.O. Box 1450
Alexandria, VA 22313-1450
www.uspto.gov

NIXON & VANDERHYE, PC
901 NORTH GLEBE ROAD
11TH FLOOR
ARLINGTON VA 22203

COPY MAILED

JUL 23 2008

In re Application of	:	
DEPRAETERE et al.	:	DECISION ON APPLICATION
Application No. 11/073,942	:	FOR
Filed: 03/08/2005	:	PATENT TERM ADJUSTMENT
Atty. Docket No. BJS-2551-167	:	

This is a decision on the "APPLICATION FOR PATENT TERM ADJUSTMENT PURSUANT TO 37 CFR § 1.705(b)," filed March 20, 2008. Applicants request that the initial determination of patent term adjustment under 35 U.S.C. 154(b) be corrected from one hundred fifty-five (155) days to one hundred eight-five (185) days, or in the alternative, one hundred fifty-eight (158) days.

The application for patent term adjustment is **GRANTED to the extent indicated herein**.

The Office has updated the PAIR screen to reflect that the correct Patent Term Adjustment (PTA) determination at the time of the mailing of the Notice of Allowance is **one hundred fifty-six (156) days.** A copy of the updated PAIR screen, showing the correct determination, is enclosed.

On December 20, 2007, the Office mailed the Determination of Patent Term Adjustment under 35 U.S.C. 154(b) in the above-identified application. The Notice stated that the patent term adjustment (PTA) to date is one hundred fifty five (155) days. On March 20, 2008, applicants timely submitted the instant application for patent term adjustment[1].

[1] The Office records show that applicants paid the issue fee on March 20, 2008.

Applicants seek the removal of the reduction of thirty (30) days under 37 CFR 1.704(c)(7) for submission of a reply having an omission (i.e. a non-compliant amendment) on May 29, 2007. Initially, applicants note that the PTA Calculations incorrectly indicates that the amendment was filed on May 26, 2007, instead of May 29, 2007. A review of the Image File Wrapper reveals that the amendment was filed on May 29, 2007. Therefore, the date of May 29, 2007, and not May 26, 2007, should have been used for calculating PTA.

In the present petition, applicants request that the Office reconsider whether the amendment of May 29, 2007, was, in fact, non-compliant as indicated in the Notice of Non-Compliant Amendment mailed on June 13, 2007. Specifically, applicants argue that the Notice of Non-Compliant Amendment was mailed in error and that the amendment of May 29, 2007, was completely responsive to the Office Action of February 27, 2007, and should have been entered pursuant to Section 714(I)(G) of the Manual for Patent Examining Procedure.

As stated in MPEP 2732,

> 37 CFR 1.704(c)(7) establishes submission of a reply having an omission (37 CFR 1.135(c)) as a circumstance that constitutes a failure of an applicant to engage in reasonable efforts to conclude processing or examination of an application. Submitting a reply having an omission requires the Office to issue an action under 37 CFR 1.135(c) and await and process the applicant's reply to the action under 37 CFR 1.135(c) before the initial reply (as corrected) can be treated on its merits. In addition, 37 CFR 1.704(c)(7) provides that in such a case the period of adjustment set forth in 37 CFR 1.703 shall be reduced by the number of days, if any, beginning on the day after the date the reply having an omission was filed and ending on the date that the reply or other paper correcting the omission was filed. The reference to 37 CFR 1.135(c) is parenthetical because 37 CFR 1.704(c)(7) is not limited to Office actions under 37 CFR 1.135(c) but applies when the Office issues any action or notice indicating that a reply has an omission which must be corrected: e.g., (1) a decision on a petition under 37 CFR 1.47 dismissing the petition as lacking an item necessary to grant the petition; or (2) a notice indicating that the computer

readable format sequence listing filed in reply to a Notice to Comply with Requirements for Patent Applications Containing Nucleotide Sequence and/or Amino Acid Sequence Disclosures (PTO-1661) does not comply with 37 CFR 1.821 et seq.

In this instance, applicants filed a response requiring correction. By Notice of Informal or Non-responsive Amendment, applicants were advised of the omission in their amendment filed May 29, 2007 requiring correction. Furthermore, on June 25, 2007, without objection, applicants filed an amendment correcting the omission. Pursuant to 37 CFR 1.704(c)(7), entry of a period of reduction was warranted.

In the alternative, applicants assert that (if there is to be a period of reduction) the period of reduction under 37 CFR 1.704(c)(7) for submission of a reply having an omission (i.e. non-compliant amendment of May 29, 2007) should be corrected from thirty (30) days to twenty-seven (27) days. It is agreed that the period of reduction should be corrected to twenty-seven (27) days. However, applicants' argument for this correction is incorrect. Applicants assert that the three (3) month shortened statutory period for response to the Office action of February 27, 2007, fell on Monday, May 28, 2007, a federal holiday, and therefore, they had until the next succeeding business day, May 29, 2007, to file a timely response. Applicants state the period of reduction under 37 CFR 1.704(c)(7)) should be twenty-seven (27) days because the filing of the amendment on June 25, 2007, was only twenty-seven (27) days beyond the due date (i.e., the period beginning on the day after the paper was due - May 30, 2007 - and ending on the date that the supplemental reply was filed - June 25, 2007).

The Office notes that applicants' calculation of the period under 37 CFR 1.704(c)(7) as the period beginning on the day after the paper *was due* and ending on the date that the supplemental reply was filed is incorrect. Rather, 37 CFR 1.704(c)(7) states that "[s]ubmission of a reply having an omission (§ 1.135(c)), in which case the period of adjustment set forth in § 1.703 shall be reduced by the number of days, if any, beginning on the day after the date the reply having an omission *was filed* and ending on the date that the reply or other paper correcting the omission was filed." *emphasis added*. Thus, the period of reduction is properly calculated as twenty-

seven (27) days counting the number of days beginning on the day after the date the amendment containing an omission was filed, May 30, 2007, and ending on the day the reply correcting the omission was filed, June 25, 2007.

However, given that the response to the Office action mailed February 27, 2007 was filed on May 29, 2007 and not May 26, 2007, entry of a period of reduction pursuant to 37 CFR 1.704(b) is warranted. 37 CFR 1.704(b) provides that:

> With respect to the grounds for adjustment set forth in §§ 1.702(a) through (e), and in particular the ground of adjustment set forth in § 1.702(b), an applicant shall be deemed to have failed to engage in reasonable efforts to conclude processing or examination of an application for the cumulative total of any periods of time in excess of three months that are taken to reply to any notice or action by the Office making any rejection, objection, argument, or other request, measuring such three-month period from the date the notice or action was mailed or given to the applicant, in which case the period of adjustment set forth in § 1.703 shall be reduced by the number of days, if any, beginning on the day after the date that is three months after the date of mailing or transmission of the Office communication notifying the applicant of the rejection, objection, argument, or other request and ending on the date the reply was filed. The period, or shortened statutory period, for reply that is set in the Office action or notice has no effect on the three-month period set forth in this paragraph.

In this instance, applicants did not file a response to the Office action mailed February 27, 2007 until May 29, 2007, three months and 2 days later. It is also concluded that applicants' assertion that the three (3) month shortened statutory period for response to the Office action of February 27, 2007, fell on Monday, May 28, 2007, a federal holiday, and therefore, they had until the next succeeding business day, May 29, 2007, to file a timely response does not have merit with respect to entry of a period of reduction pursuant to 37 CFR 1.704(b). As stated in 37 CFR 1.704(b), the period, or shortened statutory period, for reply that is set in the Office action or notice has no effect on the three-month period set forth in this paragraph. A reply filed on May 29, 2007, was properly considered timely filed for

purposes of avoiding abandonment of the application. Nonetheless, if May 29, 2007 is outside of the three month period provided in 37 CFR 1.704(b) entry of a period of reduction is still warranted. Accordingly, a period of reduction of two (2) days, pursuant to 37 CFR 1.704(b), is being entered.

In view thereof, the correct patent term adjustment at the time of the mailing of the notice of allowance is **one hundred fifty-six (156) days** (185 days of Office delay - 29 days of applicant delay = 156 days).

Submission of the $200.00 fee set forth in 37 C.F.R. § 1.703 is acknowledged. No additional fee is required.

Applicants are reminded that any days of delay for Office issuance of the patent more than three years after the filing date of the application which overlap with the days of patent term adjustment accorded prior to the issuance of the patent will not result in any additional patent term adjustment. Further, in considering the overlap, the entire period during which the application was pending (except for periods excluded under 35 U.S.C. 154(b)(1)(B)(i)-(iii), and not just the period beginning three years after the actual filing date of the application, is the period of delay under 35 U.S.C. 154(b)(1)(B) in determining whether periods of delay overlap under 35 U.S.C. 154(b)(2)(A). See 35 U.S.C. 154(b) (1)(B); 35 U.S.C. 154(b)(2)(A); and 37 C.F.R. § 1.703(f).

The Office of Data Management has been advised of this decision. This matter is being referred to the Office of Data Management for issuance of the patent.

Telephone inquiries regarding this matter should be directed to Christina Tartera Donnell, Senior Petitions Attorney, at (571) 272-3211.

Nancy Johnson

Nancy Johnson
Senior Petitions Attorney
Office of Petitions

Enclosure: Copy of updated PAIR screen

Day : Thursday
Date: 7/17/2008

PALM INTRANET

Time: 19:11:19

PTA Calculations for Application: 11/073942			
Application Filing Date:	03/08/2005	PTO Delay (PTO):	185
Issue Date of Patent:		Three Years:	0
Pre-Issue Petitions:	0	Applicant Delay (APPL):	30
Post-Issue Petitions:	0	Total PTA (days):	156
PTO Delay Adjustment:	1		

File Contents History

Number	Date	Contents Description	PTO	APPL	START
86	07/17/2008	ADJUSTMENT OF PTA CALCULATION BY PTO		27	
85	07/17/2008	ADJUSTMENT OF PTA CALCULATION BY PTO	30		
84	07/17/2008	ADJUSTMENT OF PTA CALCULATION BY PTO		2	
75	12/20/2007	MAIL NOTICE OF ALLOWANCE			
74	12/20/2007	MAIL EXAMINER'S AMENDMENT			
73	12/19/2007	ISSUE REVISION COMPLETED			
72	12/19/2007	DOCUMENT VERIFICATION			
71	12/19/2007	NOTICE OF ALLOWANCE DATA VERIFICATION COMPLETED			
70	12/19/2007	CASE DOCKETED TO EXAMINER IN GAU			
69	12/19/2007	EXAMINER'S AMENDMENT COMMUNICATION			
68	12/17/2007	EXAMINER INTERVIEW SUMMARY RECORD (PTOL - 413)			
67	12/19/2007	NOTICE OF ALLOWABILITY			
63	10/02/2007	INFORMATION DISCLOSURE STATEMENT CONSIDERED			
62	10/02/2007	REFERENCE CAPTURE ON IDS			
61	10/02/2007	INFORMATION DISCLOSURE STATEMENT (IDS) FILED			
60	10/10/2007	DATE FORWARDED TO EXAMINER			
59	10/02/2007	AMENDMENT SUBMITTED/ENTERED WITH FILING OF CPA/RCE			
58	10/10/2007	DATE FORWARDED TO EXAMINER			
57	10/02/2007	REQUEST FOR CONTINUED EXAMINATION (RCE)			
56	10/10/2007	DISPOSAL FOR A RCE/CPA/129 (EXPRESS ABANDONMENT IF CPA)			
		INFORMATION DISCLOSURE STATEMENT (IDS)			

55	10/02/2007	FILED			
54	10/02/2007	WORKFLOW - REQUEST FOR RCE - BEGIN			
53	09/13/2007	MAIL FINAL REJECTION (PTOL - 326)			
52	09/12/2007	FINAL REJECTION			
51	05/29/2007	INFORMATION DISCLOSURE STATEMENT CONSIDERED			
50	07/09/2007	DATE FORWARDED TO EXAMINER			
49	06/25/2007	RESPONSE AFTER NON-FINAL ACTION		30	46
48	06/13/2007	MAIL NOTICE OF INFORMAL OR NON-RESPONSIVE AMENDMENT			
47	06/08/2007	DATE FORWARDED TO EXAMINER			
46.1	05/26/2007	INFORMAL OR NON-RESPONSIVE AMENDMENT AFTER EXAMINER ACTION			
46	05/26/2007	RESPONSE AFTER NON-FINAL ACTION			
45	05/29/2007	INFORMATION DISCLOSURE STATEMENT (IDS) FILED			
44	05/29/2007	INFORMATION DISCLOSURE STATEMENT (IDS) FILED			
43	03/29/2007	MISCELLANEOUS INCOMING LETTER			
42	02/27/2007	MAIL NON-FINAL REJECTION			
41	02/22/2007	NON-FINAL REJECTION			
40	12/21/2006	DATE FORWARDED TO EXAMINER			
39	12/11/2006	RESPONSE TO ELECTION / RESTRICTION FILED			
38	11/15/2006	MISCELLANEOUS INCOMING LETTER			
37	11/09/2006	MAIL RESTRICTION REQUIREMENT	185		-1
36	11/08/2006	REQUIREMENT FOR RESTRICTION / ELECTION			
35	12/27/2005	IFW TSS PROCESSING BY TECH CENTER COMPLETE			
34	12/27/2005	CASE DOCKETED TO EXAMINER IN GAU			
33	07/14/2005	PRELIMINARY AMENDMENT			
32	04/13/2005	REQUEST FOR FOREIGN PRIORITY (PRIORITY PAPERS MAY BE INCLUDED)			
31	03/08/2005	PRELIMINARY AMENDMENT			
30	11/10/2005	APPLICATION RETURN FROM OIPE			
29	11/10/2005	APPLICATION IS NOW COMPLETE			
28	03/08/2005	CLAIM PRELIMINARY AMENDMENT			
25	11/10/2005	APPLICATION RETURN TO OIPE			
24	11/10/2005	APPLICATION RETURN FROM OIPE			
23	11/10/2005	APPLICATION IS NOW COMPLETE			

21	11/10/2005	APPLICATION RETURN TO OIPE			
20	11/10/2005	APPLICATION DISPATCHED FROM OIPE			
19	11/10/2005	APPLICATION IS NOW COMPLETE			
18	07/14/2005	ADDITIONAL APPLICATION FILING FEES			
17	07/14/2005	OMMITED SPECIFICATION PAGES. APPLICANT HAS PETITIONED THAT THE FILING DATE NOT BE CHANGED AND THE P			
16	10/26/2005	MAIL-PETITION DECISION - GRANTED			
15	07/14/2005	PETITION ENTERED			
14	07/14/2005	REQUEST FOR REFUND			
13	05/18/2005	NOTICE OF OMITTED ITEMS			
12	04/13/2005	OMMITED SPECIFICATION PAGES. APPLICANT HAS PETITIONED THAT THE FILING DATE NOT BE CHANGED AND THE P			
10	04/13/2005	ADDITIONAL APPLICATION FILING FEES			
9	04/13/2005	A STATEMENT BY ONE OR MORE INVENTORS SATISFYING THE REQUIREMENT UNDER 35 USC 115, OATH OF THE APPLIC			
8	05/18/2005	NOTICE MAILED--APPLICATION INCOMPLETE--FILING DATE ASSIGNED			
6	04/28/2005	CLEARED BY L&R (LARS)			
5	04/06/2005	REFERRED TO LEVEL 2 (LARS) BY OIPE CSR			
4	03/27/2005	IFW SCAN & PACR AUTO SECURITY REVIEW			
3	03/24/2005	CRF IS GOOD TECHNICALLY / ENTERED INTO DATABASE			
2	03/08/2005	CRF DISK HAS BEEN RECEIVED BY PREEXAM / GROUP / PCT			
1	03/08/2005	INITIAL EXAM TEAM NN			

Search Another: Application# Search

EXPLANATION OF PTA CALCULATION

EXPLANATION OF PTE CALCULATION

To go back, right click here and select Back. To go forward, right click here and select Forward. To refresh, right click here and select Refresh.

Back to OASIS | Home page

UNITED STATES PATENT AND TRADEMARK OFFICE

Commissioner for Patents
United States Patent and Trademark Office
P.O. Box 1450
Alexandria, VA 22313-1450
www.uspto.gov

Paper No.

NIXON & VANDERHYE, PC
901 NORTH GLEBE ROAD
11TH FLOOR
ARLINGTON VA 22203

COPY MAILED

NOV 2 1 2008

OFFICE OF PETITIONS

In re Patent No. 7,413,741	:	
Stan DePraetere	:	LETTER REGARDING
Issue Date: August 19, 2008	:	PATENT TERM ADJUSTMENT
Application No. 11/073,942	:	and
Filed: March 8, 2005	:	NOTICE OF INTENT TO ISSUE
Atty Docket No. BJS-2551-167	:	CERTIFICATE OF CORRECTION

This is in regards to the Patent Term Adjustment indicated on the above-identified patent. The Office has determined that the patent term adjustment requires correction.

The patent term adjustment indicated on the patent is to be corrected by issuance of a certificate of correction showing a revised Patent Term Adjustment of ONE HUNDRED EIGHTY-SIX (186) days.

On August 19, 2008, the above-identified application matured into U.S. Patent No. 7,413,741, with a revised Patent Term Adjustment of 736 days thereon. It has been determined that due to clerical error an incorrect PTA was indicated on the patent. The correct patent term adjustment of 186 days, pursuant to the decision on application for patent term adjustment mailed July 23, 2008 correcting the patent term adjustment at the time of the mailing of the notice of allowance to 156 days and the entry of a subsequent adjustment of 30 days associated with the Office delay in issuing the patent, was adjusted by an erroneous entry of 550 days to 736 days.

This Office error has been corrected.

No fee is required and no fee has been charged for this correction.

The application file is being forwarded to the Certificates of Correction Branch for issuance of a certificate of correction in order to rectify this error. The Office will issue a certificate of correction indicating that the term of the above-identified patent is extended or adjusted by **ONE HUNDRED EIGHTY-SIX (186)** days.

Telephone inquiries specific to this matter should be directed to the undersigned at (571) 272-3219.

Nancy Johnson
Senior Petitions Attorney
Office of Petitions

Enclosure: Copy of DRAFT Certificate of Correction

UNITED STATES PATENT AND TRADEMARK OFFICE

CERTIFICATE OF CORRECTION

PATENT : 7,413,741 B2

DATED : **August 19, 2008** **DRAFT**

INVENTOR(S) : Depraetere et al.

It is certified that error appears in the above-identified patent and that said Letters Patent is hereby corrected as shown below:

On the cover page,

[*] Notice: Subject to any disclaimer, the term of this patent is extended or adjusted under 35 USC 154(b) by 736 days

Delete the phrase "by 736 days" and insert – by 186 days--

UNITED STATES PATENT AND TRADEMARK OFFICE

Commissioner for Patents
United States Patent and Trademark Office
P.O. Box 1450
Alexandria, VA 22313-1450
www.uspto.gov

Victor H. Okumoto
P.O. Box 6120
Fremont, CA 94538

COPY MAILED

JUL 11 2008

OFFICE OF PETITIONS

In re Application of
An-Yu Kuo
Application No. 11/073,948
Filed: March 7, 2005
Attorney Docket No. OPTL001US0

DECISION ON PETITION
TO WITHDRAW
FROM RECORD

This is a decision on the Request to Withdraw as attorney or agent under 37 C.F.R. § 1.36(b) or 37 C.F.R. § 10.40 filed June 9, 2008.

The request is **APPROVED**.

A grantable request to withdraw as attorney/agent of record must be signed by every attorney/agent seeking to withdraw or contain a clear indication that one attorney is signing on behalf of another/others. A request to withdraw will not be approved unless at least 30 (thirty) days would remain between the date of approval and the later of the expiration date of a time to file a response or the expiration date of the maximum time period which can be extended under 37 C.F.R. § 1.136(a).

All future correspondence will be mailed to the applicant at the address noted on the Oath and Declaration, until further notified by the applicant. A courtesy copy of this decision will be mailed to the address noted on the request to withdraw.

Applicant is reminded that there is no attorney of record at this time.

Telephone inquires concerning this decision should be directed to Kimberly Inabinet at 571-272-4618.

Kimberly Inabinet
Petitions Examiner
Office of Petitions

cc: An-Yu Kuo
6578 Belbrook Court
San Jose, CA 95120

cc: Apache Design Solutions
Attn: An-Yu Kuo
2645 Zanker Road
San Jose, CA 95134

UNITED STATES PATENT AND TRADEMARK OFFICE

UNITED STATES DEPARTMENT OF COMMERCE
United States Patent and Trademark Office
Address: COMMISSIONER FOR PATENTS
P.O. Box 1450
Alexandria, Virginia 22313-1450
www.uspto.gov

APPLICATION NUMBER	FILING OR 371(C) DATE	FIRST NAMED APPLICANT	ATTY. DOCKET NO./TITLE
11/073,948	03/07/2005	An-Yu Kuo	OPTL001US0

CONFIRMATION NO. 2389

POWER OF ATTORNEY NOTICE

25242
VICTOR H. OKUMOTO
P.O. BOX 6120
FREMONT, CA 94538

OC000000030917379

Date Mailed: 07/11/2008

NOTICE REGARDING CHANGE OF POWER OF ATTORNEY

This is in response to the Power of Attorney filed 06/09/2008.

- The withdrawal as attorney in this application has been accepted. Future correspondence will be mailed to the new address of record. 37 CFR 1.33.

/kainabinet/

Office of Data Management, Application Assistance Unit (571) 272-4000, or (571) 272-4200, or 1-888-786-0101

UNITED STATES PATENT AND TRADEMARK OFFICE

Commissioner for Patents
United States Patent and Trademark Office
P.O. Box 1450
Alexandria, VA 22313-1450
www.uspto.gov

GIFFORD, KRASS, SPRINKLE, ANDERSON & CITKOWSKI, P.C
PO BOX 7021
TROY MI 48007-7021

MAILED

JUN 16 2010

OFFICE OF PETITIONS

ON PETITION

In re Application of
David R. Schneider
Application No. 11/073,956
Filed: March 7, 2005
Attorney Docket No. COV-10002/33

This is a decision on the petition under the unintentional provisions of 37 CFR 1.137(b), filed May 6, 2010, to revive the above-identified application.

There is no indication that the person signing the instant petition was ever given a power of attorney or authorization of agent to prosecute the above-identified application. In accordance with 37 CFR 1.34(a), the signature appearing on the petition shall constitute a representation to the United States Patent and Trademark Office that he/she is authorized to represent the particular party in whose behalf he/she acts. However, if petitioner desires to receive future correspondence regarding this application, the appropriate power of attorney or authorization of agent must be submitted. All future correspondence regarding this application file will be directed solely to the address of record until otherwise instructed.

It is not apparent whether the statement of unintentional delay was signed by a person who would have been in a position of knowing that the entire delay in filing the required reply from the due date for the reply until the filing of a grantable petition pursuant to 37 CFR 1.137(b) was unintentional. Nevertheless, in accordance with 37 CFR 10.18, the statement is accepted as constituting a certification of unintentional delay. However, in the event that petitioner has no knowledge that the delay was unintentional, petitioner must make such an inquiry to ascertain that, in fact, the delay was unintentional. If petitioner discovers that the delay was intentional, petitioner must so notify the Office

The application became abandoned for failure to timely file a reply within the meaning of 37 CFR 1.113 to the final Office action of December 17, 2008. The proposed reply required for consideration of a petition to revive must be a Notice of Appeal (and appeal fee required by 37 CFR 41.20(b)(2), an amendment that *prima facie* places the application in condition for allowance, a Request for Continued Examination and submission (37 CFR 1.114), or the filing of a continuing application under 37 CFR 1.53(b). See MPEP 711.03(c)(II)(A)(2). No extensions of time pursuant to the provisions of 37 CFR 1.136(a) were obtained. Accordingly, the date of abandonment of this application is March 18, 2009.

The petition satisfies the requirements of 37 CFR 1.137(b) in that petitioner has supplied (1) the reply in the form of a Request for Continued Examination (RCE) and fee of $405, and the submission required by 37 CFR 1.114; (2) the petition fee of $810; and (3) a proper statement of unintentional delay.

In view of the above, the petition is **GRANTED**.

The application file does not indicate a change of address has been filed in this case, although the address given on the petition differs from the address of record. A change of address should be filed in this case in accordance with MPEP 601.03. A courtesy copy of this decision is being mailed to the address noted on the petition. However, until otherwise instructed, all future correspondence regarding this application will be mailed solely to the address of record.

Telephone inquiries concerning this decision should be directed to the undersigned at (571) 272-1642. All other inquiries concerning the examination or status of this application should be directed to the Technology Center.

This application is being referred to Technology Center AU 1797 for processing of the RCE and for appropriate action by the Examiner in the normal course of business on the amendment submitted in accordance with 37 CFR 1.114.

April M. Wise
Petitions Examiner
Office of Petitions

UNITED STATES PATENT AND TRADEMARK OFFICE

UNITED STATES DEPARTMENT OF COMMERCE
United States Patent and Trademark Office
Address: COMMISSIONER FOR PATENTS
P.O. Box 1450
Alexandria, Virginia 22313-1450
www.uspto.gov

DRINKER BIDDLE & REATH LLP
ATTN: PATENT DOCKET DEPT.
191 N. WACKER DRIVE, SUITE 3700
CHICAGO, IL 60606

Mail Date: 04/20/2010

Applicant	: Myung-hun Lee	: DECISION ON REQUEST FOR
Patent Number	: 7595832	: RECALCULATION of PATENT
Issue Date	: 09/29/2009	: TERM ADJUSTMENT IN VIEW
Appliction No	: 11/073,965	: OF WYETH AND NOTICE OF INTENT TO
Filed	: 03/07/2005	: ISSUE CERTIFICATE OF CORRECTION
		:

The Request for Recalculation is **GRANTED** to the extent indicated.

The patent term adjustment has been determined to be **1241** days. The USPTO will *sua sponte* issue a certificate of correction reflecting the amount of PTA days determined by the recalculation.

Prior to the issuance of the certificate of correction, the USPTO will afford patentee an opportunity to be heard and request reconsideration. Accordingly, patentee has **one month or thirty (30) days**, whichever is longer, to file a request for reconsideration of this patent term adjustment calculation. See 35 U.S.C. 154(b)(3)(B)(ii) and 37 CFR 1.322(a)(4). No extensions of time will be granted under 37 CFR 1.136.

Patentee should use document code PET.OP if electronically filing a request for reconsideration of this patent term adjustment calculation. The patentee must also include the information required by 37 CFR 1.705(b)(2) and the fee required by 37 CFR 1.18(e). If patentee does not file a timely request for reconsideration of this patent term adjustment calculation including the information required by 37 CFR 1.705(b)(2) and the fee required by 37 CFR 1.18(e), the USPTO will issue a certificate of correction reflecting the PTA determination noted above.

Patentee should be aware that in order to preserve the right to review in the United States District Court for the District of Columbia of the USPTO patent term adjustment determination, patentee must ensure that he or she also take the steps required under 35 U.S.C. 154(b)(4)(A) in a timely manner. Nothing in the request for recalculation should be construed as providing an alternative time frame for commencing a civil action under 35 U.S.C. 154(b)(4)(A).

Any questions concerning this decision should be directed to the Office of Patent Legal Administration at 571-272-7702.

UNITED STATES PATENT AND TRADEMARK OFFICE

Commissioner for Patents
United States Patent and Trademark Office
P.O. Box 1450
Alexandria, VA 22313-1450
www.uspto.gov

Samuel Dworetsky, Esq.
AT&T Corp.
Room 2A-207
One AT&T Way
Bedminister NJ 07921

COPY MAILED

FEB 2 6 2009

OFFICE OF PETITIONS

In re Application of

Amer-Yahia, et al.

Application No. 11/073,966

Filed: March 7, 2005

Attorney Docket No. 2004-0255

DECISION ON PETITION

This is a decision on the petition under 37 CFR 1.181(a) to withdraw the holding of abandonment, filed February 3, 2009.

The petition under 37 CFR 1.181(a) to withdraw the holding of abandonment is **granted**.

This application was held abandoned on September 6, 2008, after it was believed that a proper response was received to the non-final Office action mailed June 5, 2008, which set a shortened statutory period for reply of three months from its mailing date. A Notice of Abandonment was mailed December 17, 2008.

Petitioner maintains that a proper and timely response to the non-final Office was transmitted via facsimile on November 5, 2008. As evidence of the same, petitioner provides a copy of the transmittal containing a certificate of transmission dated November 5, 2008, and a copy of the Auto-Reply sheet indicating that twelve pages were transmitted to the USPTO central fax line on November 5, 2008.

Petitioner's argument has been considered and is persuasive. Section 711.03(c) of the MPEP provides, in pertinent part, that:

> Where a certificate of mailing under 37 CFR 1.8, but not a postcard receipt, is relied upon in a petition to withdraw the holding of abandonment, see 37 CFR 1.8(b) and MPEP § 512. As stated in 37 CFR 1.8(b)(3) the statement that attests to the previous timely mailing or transmission of the correspondence must be on a personal knowledge basis, or to the satisfaction of the Director of the USPTO. If the statement attesting to the previous timely mailing is not made by the person who signed the Certificate of Mailing (i.e., there is no personal knowledge basis), then the statement attesting to the previous timely mailing should include evidence that supports the conclusion that the correspondence was actually mailed (e.g., copies of a mailing log establishing that correspondence was mailed for that application). When the correspondence is shown to have been timely filed based on a certificate of mailing, the correspondence is entered into

PALM with the actual date of receipt (i.e., the date that the duplicate copy of the papers was filed with the statement under 37 CFR 1.8).

A review of the copy of the Transmittal Form reveals that it contains a certificate of transmission dated November 5, 2008, that is signed by Joseph G. Fenske who also signed the petition document. Petitioner properly used the protections offered by 37 CFR 1.8 and is, therefore, entitled to assert that the response transmitted November 5, 2008, is timely and complete by virtue of the certificate of transmission dated November 5, 2008, contained thereon. The petition is granted, accordingly.

Further inquires regarding this decision may be directed to the undersigned at (571) 272-3222.

The application file is being forwarded to Technology Center GAU 2169 for further processing, including review of the amendment filed November 5, 2008, a copy of which was filed with the instant petition.

Kenya A. McLaughlin
Petitions Attorney
Office of Petitions

UNITED STATES PATENT AND TRADEMARK OFFICE

Commissioner for Patents
United States Patent and Trademark Office
P.O. Box 1450
Alexandria, VA 22313-1450
www.uspto.gov

VOLPE AND KOENIG, P.C.
DEPT. ICC
UNITED PLAZA, SUITE 1600
30 SOUTH 17TH STREET
PHILADELPHIA PA 19103

MAILED

MAR 16 2009

OFFICE OF PETITIONS

In re Application of	:	
Yi-Ju Chao et al	:	
Application No. 11/073,971	:	DECISION GRANTING PETITION
Filed: March 7, 2005	:	UNDER 37 CFR 1.313(c)(2)
Attorney Docket No. 1-2-0228.2US	:	

This is a decision on the petition under 37 CFR 1.313(c)(2), filed March 13, 2009, to withdraw the above-identified application from issue after payment of the issue fee.

The petition is **GRANTED**.

The above-identified application is withdrawn from issue for consideration of a submission under 37 CFR 1.114 (request for continued examination). *See* 37 CFR 1.313(c)(2).

Petitioner is advised that the issue fee paid on November 13, 2008 cannot be refunded. If, however, this application is again allowed, petitioner may request that it be applied towards the issue fee required by the new Notice of Allowance.[1]

Telephone inquiries should be directed to the undersigned at (571) 272-3208.

This application is being referred to Technology Center AU 2117 for processing of the request for continued examination under 37 CFR 1.114 and for consideration of the concurrently filed IDS.

/Karen Creasy/
Karen Creasy
Petitions Examiner
Office of Petitions

---

[1] *The request to apply the issue fee to the new Notice may be satisfied by completing and returning the new Part B – Fee(s) Transmittal Form (along with any balance due at the time of submission). Petitioner is advised that the Issue Fee Transmittal Form must be completed and timely submitted to avoid abandonment of the application.*

UNITED STATES PATENT AND TRADEMARK OFFICE

UNITED STATES DEPARTMENT OF COMMERCE
United States Patent and Trademark Office
Address: COMMISSIONER FOR PATENTS
P.O. Box 1450
Alexandria, Virginia 22313-1450
www.uspto.gov

VOLPE AND KOENIG, P.C.
DEPT. ICC
UNITED PLAZA, SUITE 1600
30 SOUTH 17TH STREET
PHILADELPHIA, PA 19103

Mail Date: 04/26/2010

Applicant	: Yi-Ju Chao	: DECISION ON REQUEST FOR
Patent Number	: 7581147	: RECALCULATION of PATENT
Issue Date	: 08/25/2009	: TERM ADJUSTMENT IN VIEW
Application No	: 11/073,971	: OF WYETH AND NOTICE OF INTENT TO
Filed	: 03/07/2005	: ISSUE CERTIFICATE OF CORRECTION
		:

The Request for Recalculation is **GRANTED** to the extent indicated.

The patent term adjustment has been determined to be **0** days. The USPTO will *sua sponte* issue a certificate of correction reflecting the amount of PTA days determined by the recalculation.

Prior to the issuance of the certificate of correction, the USPTO will afford patentee an opportunity to be heard and request reconsideration. Accordingly, patentee has **one month or thirty (30) days**, whichever is longer, to file a request for reconsideration of this patent term adjustment calculation. See 35 U.S.C. 154(b)(3)(B)(ii) and 37 CFR 1.322(a)(4). No extensions of time will be granted under 37 CFR 1.136.

Patentee should use document code PET.OP if electronically filing a request for reconsideration of this patent term adjustment calculation. The patentee must also include the information required by 37 CFR 1.705(b)(2) and the fee required by 37 CFR 1.18(e). If patentee does not file a timely request for reconsideration of this patent term adjustment calculation including the information required by 37 CFR 1.705(b)(2) and the fee required by 37 CFR 1.18(e), the USPTO will issue a certificate of correction reflecting the PTA determination noted above.

Patentee should be aware that in order to preserve the right to review in the United States District Court for the District of Columbia of the USPTO patent term adjustment determination, patentee must ensure that he or she also take the steps required under 35 U.S.C. 154(b)(4)(A) in a timely manner. Nothing in the request for recalculation should be construed as providing an alternative time frame for commencing a civil action under 35 U.S.C. 154(b)(4)(A).

Any questions concerning this decision should be directed to the Office of Patent Legal Administration at 571-272-7702.

UNITED STATES PATENT AND TRADEMARK OFFICE

Commissioner for Patents
United States Patent and Trademark Office
P.O. Box 1450
Alexandria, VA 22313-1450
www.uspto.gov

IP GROUP OF DLA PIPER RUDNICK GRAY CARY US LLP
1650 MARKET ST.
SUITE 4900
PHILADELPHIA, PA 19103

COPY MAILED

JAN 1 1 2006

OFFICE OF PETITIONS

In re Application of	:	
Sophie Lebel-Binay, Elisabeth Dam,	:	
Luc Boblet and Dominique Costantini	:	
Application No. 11/073,972	:	DECISION REFUSING STATUS
Filed: March 7, 2005	:	UNDER 37 CFR 1.47(a)
Title: METHOD FOR STUDY OF THE	:	
GENETIC AND FUNCTIONAL	:	
VARIABILITY OF HIV AND KIT FOR	:	
USING IT	:	

This is in response to the "Petition Under 37 CFR 1.47(a)," filed December 27, 2005 (Certificate of Mailing date: December 19, 2005).

The petition is dismissed.

Rule 47 applicant is given TWO MONTHS from the mailing date of this decision to reply, correcting the below-noted deficiencies. Any reply should be entitled "Request for Reconsideration of Petition Under 37 CFR 1.47(a)," and should only address the deficiencies noted below, except that the reply may include an oath or declaration executed by the non-signing inventor. **FAILURE TO RESPOND WILL RESULT IN ABANDONMENT OF THE APPLICATION.** Any extensions of time will be governed by 37 CFR 1.136(a).

The above-identified application was filed on March 7, 2005 without an executed oath or declaration and naming Sophie Lebel-Binay, Elisabeth Dam, Luc Boblet and Dominique Costantini as joint inventors.

Accordingly, on May 19, 2005, a "Notice to File Missing Parts of Application" was mailed, requiring an executed oath or declaration and a surcharge for its late filing.

In response, on December 27, 2005 (Certificate of Mailing date: December 19, 2005), the instant petition and a five (5) month extension of time were submitted.

A grantable petition under 37 CFR 1.47(a) requires:

(1) proof that the non-signing inventor cannot be reached or refuses to sign the oath or declaration after having been presented with the application papers (specification, claims and drawings);

(2) an acceptable oath or declaration;

(3) the petition fee; and

(4) a statement of the last known address of the non-signing inventor.

Applicant lacks item (2), as set forth above.

As to item (2), an oath or declaration for the patent application in compliance with 37 CFR 1.63 and 1.64 still has not been presented. See MPEP 409.03(a). Non-initialed and/or non-dated alterations have been made to the oath or declaration. See 37 CFR 1.52(c).

Further correspondence with respect to this matter should be addressed as follows:

By mail: Mail Stop Petition
Commissioner for Patents
Box 1450
Alexandria, VA 22313

By FAX: (571) 273-8300
Attn: Office of Petitions

By hand: Customer Service Window
Randolph Building
401 Dulany Street
Alexandria, VA 22314

Telephone inquiries related to this decision should be directed to the undersigned at (571) 272-3228.

Edward J. Tannouse
Petitions Attorney
Office of Petitions
Office of the Deputy Commissioner
for Patent Examination Policy

UNITED STATES PAT. . AND TRADEMARK OFFICE

Bdm-o 5-1028

Commissioner for Patents
United States Patent and Trademark Office
P.O. Box 1450
Alexandria, VA 22313-1450
www.uspto.gov

IP GROUP OF DLA PIPER RUDNICK GRAY CARY US LLP
1650 MARKET ST.
SUITE 4900
PHILADELPHIA, PA 19103

COPY MAILED

JAN 1 1 2006

OFFICE OF PETITIONS

In re Application of
Sophie Lebel-Binay, Elisabeth Dam,
Luc Boblet and Dominique Costantini
Application No. 11/073,972
Filed: March 7, 2005
Title: METHOD FOR STUDY OF THE GENETIC AND FUNCTIONAL VARIABILITY OF HIV AND KIT FOR USING IT

DECISION REFUSING STATUS
UNDER 37 CFR 1.47(a)

RESPONSE DUE 3/11/06 (2 mths) 7/11/06 (6 mths)

This is in response to the "Petition Under 37 CFR 1.47(a)," filed December 27, 2005 (Certificate of Mailing date: December 19, 2005).

The petition is dismissed.

Rule 47 applicant is given TWO MONTHS from the mailing date of this decision to reply, correcting the below-noted deficiencies. Any reply should be entitled "Request for Reconsideration of Petition Under 37 CFR 1.47(a)," and should only address the deficiencies noted below, except that the reply may include an oath or declaration executed by the non-signing inventor. **FAILURE TO RESPOND WILL RESULT IN ABANDONMENT OF THE APPLICATION.** Any extensions of time will be governed by 37 CFR 1.136(a).

The above-identified application was filed on March 7, 2005 without an executed oath or declaration and naming Sophie Lebel-Binay, Elisabeth Dam, Luc Boblet and Dominique Costantini as joint inventors.

Accordingly, on May 19, 2005, a "Notice to File Missing Parts of Application" was mailed, requiring an executed oath or declaration and a surcharge for its late filing.

In response, on December 27, 2005 (Certificate of Mailing date: December 19, 2005), the instant petition and a five (5) month extension of time were submitted.

A grantable petition under 37 CFR 1.47(a) requires:

(1) proof that the non-signing inventor cannot be reached or refuses to sign the oath or declaration after having been presented with the application papers (specification, claims and drawings);

(2) an acceptable oath or declaration;

(3) the petition fee; and

(4) a statement of the last known address of the non-signing inventor.

Applicant lacks item (2), as set forth above.

As to item (2), an oath or declaration for the patent application in compliance with 37 CFR 1.63 and 1.64 still has not been presented. See MPEP 409.03(a). Non-initialed and/or non-dated alterations have been made to the oath or declaration. See 37 CFR 1.52(c).

Further correspondence with respect to this matter should be addressed as follows:

By mail: Mail Stop Petition
Commissioner for Patents
Box 1450
Alexandria, VA 22313

By FAX: (571) 273-8300
Attn: Office of Petitions

By hand: Customer Service Window
Randolph Building
401 Dulany Street
Alexandria, VA 22314

Telephone inquiries related to this decision should be directed to the undersigned at (571) 272-3228.

Edward J. Tannouse
Petitions Attorney
Office of Petitions
Office of the Deputy Commissioner
for Patent Examination Policy

UNITED STATES PATENT AND TRADEMARK OFFICE

Commissioner for Patents
United States Patent and Trademark Office
P.O. Box 1450
Alexandria, VA 22313-1450
www.uspto.gov

IP GROUP OF DLA PIPER RUDNICK GRAY CARY US LLP
1650 MARKET ST.
SUITE 4900
PHILADELPHIA, PA 19103

COPY MAILED

FEB 17 2006

OFFICE OF PETITIONS

In re Application of Sophie Lebel-Binay, Elisabeth Dam, Luc Boblet and Dominique Costantini Application No. 11/073,972 Filed: March 7, 2005 For: METHOD FOR STUDY OF THE GENETIC AND FUNCTIONAL VARIABILITY OF HIV AND KIT FOR USING IT	:	DECISION GRANTING PETITION UNDER 37 CFR 1.47(a)

This is in response to the "Request For Reconsideration of Petition Under 37 CFR 1.47(a)," filed February 2, 2006.

The petition is **granted**.

Petitioner has shown that non-signing inventor Luc Boblet has refused to join in the filing of the above-identified application.

The above-identified application and papers have been reviewed and found in compliance with 37 CFR 1.47(a). This application is hereby accorded Rule 1.47(a) status. As provided in Rule 1.47(c), this Office will forward notice of this application's filing to the non-signing inventor at the address given in the petition. Notice of the filing of this application will also be published in the Official Gazette.

The file is being forwarded to the Office of Initial Patent Examination for further processing.

Telephone inquiries regarding this decision should be directed to the undersigned at (571) 272-3228.

Edward J. Tannouse
Petitions Attorney
Office of Petitions
Office of the Deputy Commissioner
for Patent Examination Policy

UNITED STATES PATENT AND TRADEMARK OFFICE

Commissioner for Patents
United States Patent and Trademark Office
P.O. Box 1450
Alexandria, VA 22313-1450
www.uspto.go

LUC BOBLET
20 RUE ROSAIRE
F-28410 BOUTIGNY S/OPTON
FRANCE

COPY MAILED
FEB 17 2006
OFFICE OF PETITIONS

In re Application of
Sophie Lebel-Binay, Elisabeth Dam, Luc Boblet and Dominique Costantini
Application No. 11/073,972
Filed: March 7, 2005
For: METHOD FOR STUDY OF THE GENETIC AND FUNCTIONAL VARIABILITY OF HIV AND KIT FOR USING IT

Dear LUC BOBLET:

You are named as a joint inventor in the above identified United States patent application, filed under the provisions of 35 U.S.C. 116 (United States Code), and 37 CFR 1.47(a), Rules of Practice in Patent Cases. Should a patent be granted on the application you will be designated therein as a joint inventor.

As a named inventor you are entitled to inspect any paper in the file wrapper of the application, order copies of all or any part thereof (at a prepaid cost per 37 CFR 1.19) or make your position of record in the application. Alternatively, you may arrange to do any of the preceding through a registered patent attorney or agent presenting written authorization from you. If you care to join the application, counsel of record (see below) would presumably assist you. Joining in the application would entail the filing of an appropriate oath or declaration by you pursuant to 37 CFR 1.63.

Telephone inquiries regarding this communication should be directed to the undersigned at (571) 272-3228. Requests for information regarding your application should be directed to the File Information Unit at (703) 308-2733. Information regarding how to pay for and order a copy of the application, or a specific paper in the application, should be directed to Certification Division at (703) 308-9726 or 1 (800) 972-6382 (outside the Washington D.C. area).

Edward J. Tannouse
Petitions Attorney
Office of Petitions
Office of the Deputy Commissioner
for Patent Examination Policy

IP GROUP OF DLA PIPER RUDNICK GRAY CARY US LLP
1650 MARKET ST.
SUITE 4900
PHILADELPHIA, PA 19103

UNITED STATES PATENT AND TRADEMARK OFFICE

Commissioner for Patents
United States Patent and Trademark Office
P.O. Box 1450
Alexandria, VA 22313-1450
www.uspto.gov

APPLICATION NUMBER	FILING/RECEIPT DATE	FIRST NAMED APPLICANT	ATTORNEY DOCKET NUMBER
11/073,983	03/07/2005	Takao Tani	P04-1035

YOKOI & CO. U.S.A., INC.
13700 MARINA POINTE DRIVE #723
MARINA DEL RAY CA 90292

DATE MAILED: February 12, 2007

DECISION GRANTING PETITION UNDER 37 CFR 1.138(d)
The declaration of express abandonment is recognized

This is in response to the petition under 37 CFR 1.138(d) filed January 31, 2007, requesting for a refund of any previously paid search fee and excess claims fee in the above-identified application.

The petition is granted.

The express abandonment is recognized. Any previously paid search fee and excess claims fee are hereby refunded.

Any inquiries concerning this decision should be directed to the Pre-Grant Publication Division at (703) 605-4283.

Barbara J. Debnam
Pre-Grant Publication Division

UNITED STATES PATENT AND TRADEMARK OFFICE

Commissioner for Patents
United States Patent and Trademark Office
P.O. Box 1450
Alexandria, VA 22313-1450
www.uspto.gov

COPY MAILED

JUN 29 2007

OFFICE OF PETITIONS

FOLEY AND LARDNER LLP
SUITE 500
3000 K STREET NW
WASHINGTON, DC 20007

In re Application of
BOSCHETTI, Egisto et al.
Application No. 11/073,999
Filed: March 08, 2005
Attorney Docket No. **035394-0280**

DECISION ON PETITION TO WITHDRAW FROM RECORD

This is a decision on the Request to Withdraw as attorney or agent of record under 37 C.F.R. § 1.36(b), filed March 30, 2007.

The request is **NOT APPROVED** as moot.

A review of the file record indicates that the power of attorney to Foley & Lardner LLP has been revoked by the assignee of the patent application on April 23, 2007. Accordingly, the request to withdraw under 37 C.F.R. § 1.36(b) is moot.

All future communications from the Office will continue to be directed to the below-listed address until otherwise notified by applicant.

Telephone inquires concerning this decision should be directed to Michelle R. Eason at 571-272-4231.

T Williams

Terri Williams
Petitions Examiner
Office of Petitions

cc: **MORGAN, LEWIS & BOCKIUS LLP (SF)**
2 PALO ALTO SQUARE
3000 EL CAMINO REAL, SUITE 700
PALO ALTO CA 94306

SPE RESPONSE FOR CERTIFICATE OF CORRECTION

Paper No.: _____

DATE : April 07, 2007

TO SPE OF : ART UNIT 2886 11/074020

SUBJECT : Request for Certificate of Correction on Patent No.: 7042548 B2

A response is requested with respect to the accompanying request for a certificate of correction.

Please complete this form and return with file, within **7** days to:

Palm location **7580, Certificates of Correction Branch – South Tower – 9A22**

If response is for an IFW, **return to employee (named below) via PUBSCofC Team in MADRAS.**

With respect to the change(s) requested, correcting Office and/or Applicant's errors, should the patent read as shown in the certificate of correction (COCIN)? No new matter should be introduced, nor should the scope or meaning of the claims be changed.

Thank You For Your Assistance

Elisha Evans
Certificates of Correction Branch
Tel. No. 703-308-9390 EXT 110

The request for issuing the above-identified correction(s) is hereby:

Note your decision on the appropriate box.

- ☑ **Approved** — All changes apply.
- ☐ **Approved in Part** — Specify below which changes **do not** apply.
- ☐ **Denied** — State the reasons for denial below.

Comments:

_____

_____

_____

_____

_____

SPE — **Art Unit** 2886

UNITED STATES PATENT AND TRADEMARK OFFICE

UNITED STATES DEPARTMENT OF COMMERCE
United States Patent and Trademark Office
Address: COMMISSIONER FOR PATENTS
P.O. Box 1450
Alexandria, Virginia 22313-1450
www.uspto.gov

THE FARRELL LAW FIRM, LLP
290 Broadhollow Road
Suite 210E
Melville, NY 11747

Mail Date: 04/21/2010

Applicant	: In-Seok Hwang	: DECISION ON REQUEST FOR
Patent Number	: 7668253	: RECALCULATION of PATENT
Issue Date	: 02/23/2010	: TERM ADJUSTMENT IN VIEW
Appliction No	: 11/074,040	: OF WYETH AND NOTICE OF INTENT TO
Filed	: 03/07/2005	: ISSUE CERTIFICATE OF CORRECTION
		:

The Request for Recalculation is **GRANTED** to the extent indicated.

The patent term adjustment has been determined to be **1229** days. The USPTO will *sua sponte* issue a certificate of correction reflecting the amount of PTA days determined by the recalculation.

Prior to the issuance of the certificate of correction, the USPTO will afford patentee an opportunity to be heard and request reconsideration. Accordingly, patentee has **one month or thirty (30) days**, whichever is longer, to file a request for reconsideration of this patent term adjustment calculation. See 35 U.S.C. 154(b)(3)(B)(ii) and 37 CFR 1.322(a)(4). No extensions of time will be granted under 37 CFR 1.136.

Patentee should use document code PET.OP if electronically filing a request for reconsideration of this patent term adjustment calculation. The patentee must also include the information required by 37 CFR 1.705(b)(2) and the fee required by 37 CFR 1.18(e). If patentee does not file a timely request for reconsideration of this patent term adjustment calculation including the information required by 37 CFR 1.705(b)(2) and the fee required by 37 CFR 1.18(e), the USPTO will issue a certificate of correction reflecting the PTA determination noted above.

Patentee should be aware that in order to preserve the right to review in the United States District Court for the District of Columbia of the USPTO patent term adjustment determination, patentee must ensure that he or she also take the steps required under 35 U.S.C. 154(b)(4)(A) in a timely manner. Nothing in the request for recalculation should be construed as providing an alternative time frame for commencing a civil action under 35 U.S.C. 154(b)(4)(A).

Any questions concerning this decision should be directed to the Office of Patent Legal Administration at 571-272-7702.

UNITED STATES PATENT AND TRADEMARK OFFICE

Commissioner for Patents
United States Patent and Trademark Office
P.O. Box 1450
Alexandria, VA 22313-1450
www.uspto.gov

APR 21 2005

JOHN WILLIAM JONES
LOCKE LIDDELL & SAPP LLP
3400 CHASE TOWER
600 TRAVIS STREET
HOUSTON, TEXAS 77002-3095

In re Application of	:
ROBERT A. SMILEY	:
Serial No.: 11/074,046	: PETITION TO MAKE SPECIAL
Filed: March 07, 2005	:
Attorney Docket No.: 019528-01000	:

This is in response to applicants' petition filed March 07, 2005, to make the above-identified application special under the provisions of 37 CFR 1.102(c), based on the age of the applicant. No fee is required for this petition.

Applicant has satisfied the provisions set forth in M.P.E.P. 708.02, IV. Therefore, the petition is **GRANTED**.

The application will be forwarded to the examiner for action on the merits commensurate with this decision.

Should there be any questions with regard to this letter please contact William Dixon by letter addressed to the Director, Technology Center 1600, PO BOX 1450, ALEXANDRIA, VA 22313-1450, or by telephone at 571-272-0519 or by facsimile transmission to the general Office facsimile number.

William Dixon
Special Program Examiner
Technology Center 1600

UNITED STATES PATENT AND TRADEMARK OFFICE

H·A

UNITED STATES DEPARTMENT OF COMMERCE
United States Patent and Trademark Office
Address: COMMISSIONER FOR PATENTS
P.O. Box 1450
Alexandria, Virginia 22313-1450
www.uspto.gov

APPLICATION NO.	FILING DATE	FIRST NAMED INVENTOR	ATTORNEY DOCKET NO.	CONFIRMATION NO.
11/074,066	03/07/2005	Jon H. Bechtel	GEN10 P-362C	9711

28469 7590 01/16/2008
PRICE, HENEVELD, COOPER, DEWITT, & LITTON,
LLP/GENTEX CORPORATION
695 KENMOOR, S.E.
P O BOX 2567
GRAND RAPIDS, MI 49501

EXAMINER
LUU, THANH X

ART UNIT	PAPER NUMBER
2878	

MAIL DATE	DELIVERY MODE
01/16/2008	PAPER

Please find below and/or attached an Office communication concerning this application or proceeding.

The time period for reply, if any, is set in the attached communication.

UNITED STATES PATENT AND TRADEMARK OFFICE

Commissioner for Patents
United States Patent and Trademark Office
P.O. Box 1450
Alexandria, VA 22313-1450
www.uspto.gov

In re Application of Jon H. Bechtel et al. Serial No.: 11/074066 Filed: March 7, 2005 For: AUTOMATIC DIMMING MIRROR USING SEMICONDUCTOR GLARE SENSOR	: : : : : : : :	DECISION ON PETITION UNDER 37 CFR 1.181

The request filed on September 10, 2007, to withdraw the finality of the office action of August 14, 2007 is treated as a Petition under 37CFR 1.181.

The petition if **granted**.

The Petition is granted for the reasons as stated in the applicant's request filed on September 10, 2007. The finality of the Office action dated August 14, 2007 is withdrawn and prosecution is reopened.

This application is being forwarded to the examiner for appropriate action consistent with this decision. The finality of the Office action mailed on August 14, 2007 will be withdrawn.

Georgia Y. Epps
Supervisory Patent Examiner, Art Unit 2878

Terry S. Callaghan
PRICE, HENEVELD, COOPER,
DEWITT & LITTON, LLP
695 Kenmoor, S.E.
Post Office Box 2567
Grand Rapids, Michigan 49501

UNITED STATES PATENT AND TRADEMARK OFFICE

UNITED STATES DEPARTMENT OF COMMERCE
United States Patent and Trademark Office
Address: COMMISSIONER FOR PATENTS
P.O. Box 1450
Alexandria, Virginia 22313-1450
www.uspto.gov

DICKSTEIN SHAPIRO LLP
1825 EYE STREET NW
Washington, DC 20006-5403

Mail Date: 04/21/2010

Applicant	: Tomomi Ishimi	: DECISION ON REQUEST FOR
Patent Number	: 7646692	: RECALCULATION of PATENT
Issue Date	: 01/12/2010	: TERM ADJUSTMENT IN VIEW
Appliction No	: 11/074,070	: OF WYETH AND NOTICE OF INTENT TO
Filed	: 03/08/2005	: ISSUE CERTIFICATE OF CORRECTION
		:

The Request for Recalculation is **GRANTED** to the extent indicated.

The patent term adjustment has been determined to be **1345** days. The USPTO will *sua sponte* issue a certificate of correction reflecting the amount of PTA days determined by the recalculation.

Prior to the issuance of the certificate of correction, the USPTO will afford patentee an opportunity to be heard and request reconsideration. Accordingly, patentee has **one month or thirty (30) days**, whichever is longer, to file a request for reconsideration of this patent term adjustment calculation. See 35 U.S.C. 154(b)(3)(B)(ii) and 37 CFR 1.322(a)(4). No extensions of time will be granted under 37 CFR 1.136.

Patentee should use document code PET.OP if electronically filing a request for reconsideration of this patent term adjustment calculation. The patentee must also include the information required by 37 CFR 1.705(b)(2) and the fee required by 37 CFR 1.18(e). If patentee does not file a timely request for reconsideration of this patent term adjustment calculation including the information required by 37 CFR 1.705(b)(2) and the fee required by 37 CFR 1.18(e), the USPTO will issue a certificate of correction reflecting the PTA determination noted above.

Patentee should be aware that in order to preserve the right to review in the United States District Court for the District of Columbia of the USPTO patent term adjustment determination, patentee must ensure that he or she also take the steps required under 35 U.S.C. 154(b)(4)(A) in a timely manner. Nothing in the request for recalculation should be construed as providing an alternative time frame for commencing a civil action under 35 U.S.C. 154(b)(4)(A).

Any questions concerning this decision should be directed to the Office of Patent Legal Administration at 571-272-7702.

UNITED STATES PATENT AND TRADEMARK OFFICE

Commissioner for Patents
United States Patent and Trademark Office
P.O. Box 1450
Alexandria, VA 22313-1450
www.uspto.gov

MAILED
FROM DIRECTORS OFFICE

SEP 13 2005

TECHNOLOGY CENTER 3600

ST. ONGE STEWARD JOHNSTON & REENS, LLC
986 BEDFORD STREET
STAMFORD, CT 06905-5619

In re application of Larry Edinger et al. Application No. 11/074,091 Filed: March 7, 2005 For: TABLECLOTH COVERING AND METHOD OF COVERING AND SKIRTING A TABLE	: : : : : : : :	**DECISION ON PETITION TO MAKE SPECIAL (INFRINGEMENT)**

This is a decision on the petition under 37 C.F.R § 1.102(d) filed August 25, 2005 to make the above-identified application special.

The petition requests that the above-identified application be made special under the procedure set forth in M.P.E.P. § 708.02, item II: Infringement.

MPEP 708.02 states that a Petition to Make Special based on Infringement must have the following: (1) the appropriate petition fee under 37 CFR 1.17(i); (2) a statement by the assignee, applicant, or attorney alleging: (A) that there is an infringing device or product actually on the market or method in use; (B) that a rigid comparison of the alleged infringing device, product or method with the claims of the application has been made, and that, in his or her opinion, some of the claims are unquestionably infringed; and (C) that he or she has made a careful and thorough search of the prior art, or has good knowledge of the prior art, and has sent a copy of the references deemed most closely related to the subject matter encompassed by the claims.

The petition filed August 25, 2005 meets all of the requirements above and, therefore, the petition is **GRANTED**.

The examiner is directed (1) to make an interference search for possible interfering applications; (2) to promptly examine this application out of turn; and (3) if any interfering application is discovered, to examine such application simultaneously and state in the first official letter of such application that it is being taken out of turn because of a possible interference.

Petitioner is advised that this application will continue to be special, throughout its entire prosecution and pendency, including interference and appeal, if any, only if petitioner makes a prompt *bona fide* effort, in response to each Office action, to place the application in condition for allowance, even if it is necessary to conduct an interview with the examiner to accomplish this purpose.

Steven N. Meyers
Special Programs Examiner
Technology Center 3600
571-272-6611

SAM/dew: 09/08/05

UNITED STATES PATENT AND TRADEMARK OFFICE

UNITED STATES DEPARTMENT OF COMMERCE
United States Patent and Trademark Office
Address: COMMISSIONER FOR PATENTS
P.O. Box 1450
Alexandria, Virginia 22313-1450
www.uspto.gov

Microsoft Corporation
One Microsoft Way
Redmond, WA 98052

Mail Date: 04/21/2010

Applicant	: Li Li	: DECISION ON REQUEST FOR
Patent Number	: 7640309	: RECALCULATION of PATENT
Issue Date	: 12/29/2009	: TERM ADJUSTMENT IN VIEW
Appliction No	: 11/074,099	: OF WYETH AND NOTICE OF INTENT TO
Filed	: 03/07/2005	: ISSUE CERTIFICATE OF CORRECTION
		:

The Request for Recalculation is **GRANTED** to the extent indicated.

The patent term adjustment has been determined to be **141** days. The USPTO will *sua sponte* issue a certificate of correction reflecting the amount of PTA days determined by the recalculation.

Prior to the issuance of the certificate of correction, the USPTO will afford patentee an opportunity to be heard and request reconsideration. Accordingly, patentee has **one month or thirty (30) days**, whichever is longer, to file a request for reconsideration of this patent term adjustment calculation. See 35 U.S.C. 154(b)(3)(B)(ii) and 37 CFR 1.322(a)(4). No extensions of time will be granted under 37 CFR 1.136.

Patentee should use document code PET.OP if electronically filing a request for reconsideration of this patent term adjustment calculation. The patentee must also include the information required by 37 CFR 1.705(b)(2) and the fee required by 37 CFR 1.18(e). If patentee does not file a timely request for reconsideration of this patent term adjustment calculation including the information required by 37 CFR 1.705(b)(2) and the fee required by 37 CFR 1.18(e), the USPTO will issue a certificate of correction reflecting the PTA determination noted above.

Patentee should be aware that in order to preserve the right to review in the United States District Court for the District of Columbia of the USPTO patent term adjustment determination, patentee must ensure that he or she also take the steps required under 35 U.S.C. 154(b)(4)(A) in a timely manner. Nothing in the request for recalculation should be construed as providing an alternative time frame for commencing a civil action under 35 U.S.C. 154(b)(4)(A).

Any questions concerning this decision should be directed to the Office of Patent Legal Administration at 571-272-7702.

UNITED STATES PATENT AND TRADEMARK OFFICE

Commissioner for Patents
United States Patent and Trademark Office
P.O. Box 1450
Alexandria, VA 22313-1450
www.uspto.gov

THE PROCTER & GAMBLE COMPANY
GLOBAL LEGAL DEPARTMENT - IP
SYCAMORE BUILDING - 4TH FLOOR
299 EAST SIXTH STREET
CINCINNATI OH 45202

MAILED

APR 09 2010

OFFICE OF PETITIONS

In re Application of	:	
Motsch et al.	:	
Application No. 11/074,101	:	DECISION ON PETITION
Filed: March 7, 2005	:	
Attorney Docket No. 9929Q	:	

This is a decision on the petition under the unintentional provisions of 37 CFR 1.137(b), filed February 4, 2010, to revive the above-identified application.

The petition is **GRANTED**.

This application became abandoned as a result of petitioner's failure to file an appeal brief (and fee required by 37 CFR 41.20(b)(2))within the time period provided in 37 CFR 41.37(a)(1). No extensions of time were obtained. As an appeal brief (and appeal brief fee) was not filed within two (2) months of the Notice of Appeal filed April 27, 2009, the appeal was dismissed and the proceedings as to the rejected claims were terminated. See 37 CFR 1.197(b). As no claim was allowed, the application became abandoned on June 28, 2009. *See* MPEP 1215.04. A Notice of Abandonment was mailed December 4, 2009.

The petition satisfies the requirements of 37 CFR 1.137(b) in that petitioner has supplied (1) the reply in the form of a Request for Continued Examination (RCE) and fee of $810.00, and the submission required by 37 CFR 1.114; (2) the petition fee of $1,620.00; and (3) a proper statement of unintentional delay.

Telephone inquiries concerning this decision should be directed to the undersigned at (571) 272-7751.

The file is now being forwarded to Technology Center AU 3761 for processing of the Request for Continued Examination under 37 CFR 1.114 filed with the instant petition.

Joan Olszewski

Joan Olszewski
Petitions Examiner
Office of Petitions

UNITED STATES PATENT AND TRADEMARK OFFICE

Commissioner for Patents
United States Patent and Trademark Office
P.O. Box 1450
Alexandria, VA 22313-1450
www.uspto.gov

WHYTE HIRSCHBOECK DUDEK S C
555 EAST WELLS STREET
SUITE 1900
MILWAUKEE WI 53202

COPY MAILED
SEP 1 2 2005
OFFICE OF PETITIONS

In re Application of	:	
Chang et al.	:	
Application No. 11/074,129	:	DECISION GRANTING PETITION
Filed: March 7, 2005	:	
Attorney Docket No. DKA-32447(1)	:	

This is a decision on the petition filed August 11, 2005, requesting that the above-identified application be accorded a filing date of March 7, 2005.

On March 7, 2005, applicants deposited the above-identified application. On June 10, 2005, the Office of Initial Patent Examination mailed a "Notice of Incomplete Nonprovisional Application," stating, *inter alia*, that the application had not been accorded a filing date as the application was deposited without any drawings and that the filing date would be the date of receipt of the drawings.

In response, on August 11, 2005, applicants submitted, *inter alia*, the present petition, 10 sheets of drawings, a returned, date-stamped postcard receipt, and an authorization to charge the Deposit Account for any necessary fees. The postcard acknowledged receipt of 10 sheets of drawings in the United States Patent and Trademark Office (USPTO) on March 7, 2005.

Upon review of the record, the 10 sheets of drawings, deposited on March 7, 2005, have not been located among the application papers. However, the evidence is convincing that the application papers deposited on March 7, 2005, included 10 sheets of drawings, which were subsequently misplaced in the USPTO. Therefore, the application including the 10 sheets of drawings, was complete on filing and will be granted a filing date of March 7, 2005.

Accordingly, the petition is granted.

The requirement for drawings as set forth in the Notice of Incomplete was sent in error and is hereby withdrawn.

The Office records indicate that applicants paid a $60.00 fee for an extension of time for response within the first month. The Office notes that the period for reply cannot be extended. Therefore, the $60.00 fee will be refunded to applicants' Deposit Account. Furthermore, the finance records indicate that the Office mistakenly charged applicants Deposit Account twice for the petition fee, totaling $800.00. The petition fee, totaling $800.00, is unnecessary will also be credited to applicants' Deposit Account.

The Office of Initial Patent Examination is directed **to accord the above-identified application a filing date of March 7, 2005**, using the 10 sheets of drawings submitted on August 11, 2005, and to mail a corrected filing receipt. Additionally, the Office is directed to issue applicants a Notice to File Missing Parts of Nonprovisional Application because an oath or declaration is missing.

Any inquiries related to this decision should be directed to the undersigned at (571) 272-3211.

Christina Tartera Donnell

Christina Tartera Donnell
Senior Petitions Attorney
Office of Petitions

UNITED STATES PATENT AND TRADEMARK OFFICE

Commissioner for Patents
United States Patent and Trademark Office
P.O. Box 1450
Alexandria, VA 22313-1450
www.uspto.gov

Ronald E. Brown
PITNEY HARDIN LLP
ACCOUNT: ILLINOIS TOOL WORKS INC.
7 TIMES SQUARE
NEW YORK NY 10036-7311

MAILED JUN 14 2006

In re Application of: MATTHEWS et al.	:
Appl. No.: 11/074,132	: DECISION ON PETITION to
Filed: March 7, 2005	: make SPECIAL under 37 CFR
For: METHOD OF MAKING SLIDE-ZIPPERED	: 1.102
RECLOSABLE PACKAGES ON HORIZONTAL	:
FORM-FILL-SEAL MACHINES	:

This is a decision on the petition filed on June 2, 2005 to make the above-identified application special under the accelerated examination procedure set forth in MPEP § 708.02(VIII) and in accordance with 37 C.F.R. § 1.102(d).

The petition to make the application special is DISMISSED as moot.

At the onset, it is noted that the petition is moot in as much as examination on the merits is presently ongoing; the application stands under final rejection. Consideration of the petition on its merits is provided hereinbelow to provide petitioner guidance for grantable petitions in the future.

In support of the petition, petitioner provides: a) the applicable fee; b) a statement that all claims are drawn to a single invention; c) a statement that a pre-examination search has been made in a related previously pending application; d) a PTO-1449 IDS listing references considered pertinent; and e) a discussion one of the references.

For accelerated examination under MPEP § 708.02(VIII) in accordance with 37 C.F.R. § 1.102(d), a showing of the following is required: a) the applicable petition fee; b) all claims are directed to a single invention, or if the Office determines that all the claims presented are not obviously directed to a single invention, applicant will make an election without traverse; c) a statement that a pre-examination search was made, listing the field of search by class and subclass; d) a copy of each of the references deemed most closely related to the claimed subject matter; and e) a detailed discussion of the references pointing out with the particularity required by 37 CFR 1.111 (b) and (c), how the claimed subject matter is distinguishable over the references.

The requirements of MPEP § 708.02(VIII)(a) and (d) are considered to have been met.

However, the petition does not meet the requirements of MPEP § 708.02(VIII)(b), (c) and (e). MPEP § 708.02(VIII)(b) requires petitioner to state that all claims are directed to a single invention, or if the Office determines that all the claims presented are not obviously directed to a single invention, applicant will make an election without traverse. Petitioner does not state that all claims are directed to a single invention, *or that applicant will make an election without traverse should the Office make a restriction requirement.* Petitioner merely states "all claims are drawn to a single invention". Because the petition does not contain the required statement, it fails to meet the requirements of MPEP § 708.02(VIII)(b).

MPEP § 708.02(VIII)(c) requires a statement that a pre-examination search was made, listing the field of search by class and subclass. This is a pre-examination search conducted by/on behalf of applicant/petitioner. Reference to a prior search done by the Office in a presumably related application is inappropriate for meeting this requirement. Further, in the instant petition fails to state what the field of search encompassed. Reference to where the prior Office search record may be found does not meet the requirements of MPEP § 708.02(VIII)(c).

Regarding the requirement of MPEP § 708.02(VIII)(e), 37 CFR § 1.111 (b) states "[a] general allegation that the claims define a patentable invention without specifically pointing out how the language of the claims patentably distinguishes them from the references does not comply with the requirements of this section." 37 CFR § 1.111 (c) states in part "the applicant or patent owner must clearly point out the patentable novelty which he or she thinks the claims present in view of the state of the art disclosed by the references cited or the objections made." It is noted that the IDS submitted contains eleven references, but petitioner discusses only one reference. And while petitioner provides a discussion of one of the references cited on form PTO-1449 IDS the discussion does not point out the particular language of any claim that distinguishes from this reference. Applicant's general allegation that "McDonald reference does not disclose the sliders as recited in the present claims (i.e. , 'providing a supply of sliders…', 'removing a slider from slider supply and inserting said slider…',)" does not satisfy the requirements of 37 CFR § 1.111 (c). To meet the requirements of 37 CFR § 1.111 (c), each independent claim must be compared with each reference cited, and the patentable novelty in each independent claim relative to each reference must be clearly pointed out. Because the petition does not point out the specific language in each independent claim that distinguishes over each reference, it fails to meet the requirements of MPEP § 708.02(VIII)(e).

While Technology Center Directors may have granted petitions that do not comply with the detailed discussion requirement of the Accelerated Examination procedure, Technology Center Director decisions on petitions are not binding precedent of the Patent Examining Corps, and the application of an improper standard in certain cases does not require the Office to continue to apply the improper standard in all cases. *See In re The Boulevard Entertainment, Inc.*, 334 F.3d 1336, 1343, 67 USPQ2d 1475, 1480 (Fed. Cir. 2003)).

For the above-mentioned reasons, and the fact that prosecution on the merits of the instant application stands closed, there is no basis for granting the petition. Any inquiry regarding this decision should be directed to Jessica Harrison, Special Program Examiner, at (571) 272-4449.

Petition DISMISSED

J. Harrison, Special Program Examiner
Technology Center 3700 – Mechanical Engineering,
Manufacturing and Products

UNITED STATES PATENT AND TRADEMARK OFFICE

Commissioner for Patents
United States Patent and Trademark Office
P.O. Box 1450
Alexandria, VA 22313-1450
www.uspto.gov

JAMES L. DAVISON
19822 226TH AVENUE N.E.
WOODINVILLE WA 98077

COPY MAILED
JAN 14 2010

In re Application of	:	
William L. Bain	:	
Application No. 11/074,164	:	DECISION ON PETITION
Filed: March 7, 2005	:	
Attorney Docket No. SC0501.US	:	

This is a decision on the petition under the unintentional provisions of 37 CFR 1.137(b), filed November 20, 2009, to revive the above-identified application.

The petition is **GRANTED**.

This application became abandoned for failure to properly and timely reply to the final Office action mailed March 16, 2009. A three-month extension of time under the provisions of 37 CFR 1.136(a) was timely obtained. Accordingly, this application became abandoned on September 17, 2009. A Notice of Abandonment was mailed September 21, 2009.

The petition satisfies the requirements of 37 CFR 1.137(b) in that petitioner has supplied (1) the reply in the form of a Request for Continued Examination (RCE) and fee of $405.00 (previously submitted on September 21, 2009) and the submission required by 37 CFR 1.114; (2) the petition fee of $810.00; and (3) a proper statement of unintentional delay.

Telephone inquiries concerning this decision should be directed to the undersigned at (571) 272-7751.

The file is now being forwarded to Technology Center 2416 for processing of the Request for Continued Examination under 37 CFR 1.114 filed with the instant petition.

Joan Olszewski
Petitions Examiner
Office of Petitions

SPE RESPONSE FOR CERTIFICATE OF CORRECTION

Paper No.: _____

DATE : May 30, 2006

TO SPE OF : ART UNIT 2851

SUBJECT : Request for Certificate of Correction for Appl. No.: 11/074167 Patent No.: 7,008,065

Please respond to this request for a certificate of correction within 7 days.

Please review the requested changes/corrections as shown in the **COCIN** document(s) in the IFW application image. No new matter should be introduced, nor should the scope or meaning of the claims be changed.

Please complete the response (see below) and forward the completed response to scanning using document code **COCX**.

Magdalene Talley

Certificates of Correction Branch

703-308-9390 ext. 116

Thank You For Your Assistance

The request for issuing the above-identified correction(s) is hereby:

Note your decision on the appropriate box.

- ☒ **Approved** — **All** changes apply.
- ☐ **Approved in Part** — Specify below which changes **do not** apply.
- ☐ **Denied** — State the reasons for denial below.

Comments: _____

PATRICK ASSOUAD
SUPERVISORY PATENT EXAMINER

SPE

2862
Art Unit

UNITED STATES PATENT AND TRADEMARK OFFICE

UNITED STATES DEPARTMENT OF COMMERCE
United States Patent and Trademark Office
Address: COMMISSIONER FOR PATENTS
P.O. Box 1450
Alexandria, Virginia 22313-1450
www.uspto.gov

ALSTON & BIRD LLP
BANK OF AMERICA PLAZA
101 SOUTH TRYON STREET, SUITE 4000
CHARLOTTE, NC 28280-4000

Mail Date: 04/21/2010

Applicant	: Todd R. Klaenhammer	: DECISION ON REQUEST FOR
Patent Number	: 7608700	: RECALCULATION of PATENT
Issue Date	: 10/27/2009	: TERM ADJUSTMENT IN VIEW
Appliction No	: 11/074,176	: OF WYETH AND NOTICE OF INTENT TO
Filed	: 03/07/2005	: ISSUE CERTIFICATE OF CORRECTION
		:

The Request for Recalculation is **GRANTED** to the extent indicated.

The patent term adjustment has been determined to be **610** days. The USPTO will *sua sponte* issue a certificate of correction reflecting the amount of PTA days determined by the recalculation.

Prior to the issuance of the certificate of correction, the USPTO will afford patentee an opportunity to be heard and request reconsideration. Accordingly, patentee has **one month or thirty (30) days**, whichever is longer, to file a request for reconsideration of this patent term adjustment calculation. See 35 U.S.C. 154(b)(3)(B)(ii) and 37 CFR 1.322(a)(4). No extensions of time will be granted under 37 CFR 1.136.

Patentee should use document code PET.OP if electronically filing a request for reconsideration of this patent term adjustment calculation. The patentee must also include the information required by 37 CFR 1.705(b)(2) and the fee required by 37 CFR 1.18(e). If patentee does not file a timely request for reconsideration of this patent term adjustment calculation including the information required by 37 CFR 1.705(b)(2) and the fee required by 37 CFR 1.18(e), the USPTO will issue a certificate of correction reflecting the PTA determination noted above.

Patentee should be aware that in order to preserve the right to review in the United States District Court for the District of Columbia of the USPTO patent term adjustment determination, patentee must ensure that he or she also take the steps required under 35 U.S.C. 154(b)(4)(A) in a timely manner. Nothing in the request for recalculation should be construed as providing an alternative time frame for commencing a civil action under 35 U.S.C. 154(b)(4)(A).

Any questions concerning this decision should be directed to the Office of Patent Legal Administration at 571-272-7702.

UNITED STATES PATENT AND TRADEMARK OFFICE

COMMISSIONER FOR PATENTS
UNITED STATES PATENT AND TRADEMARK OFFICE
P.O. BOX 1450
ALEXANDRIA, VA 22313-1450
www.uspto.gov

Arlene Hornilla
General Mills
Number One General Mills Blvd.
P.O. Box 1113
Minneapolis MN 55440

COPY MAILED

JAN 25 2006

OFFICE OF PETITIONS

Applicant: Hayes-Jacobson et al.
Appl. No.: 11/074,189
Filing Date: March 7, 2005
Title: EXTRUDED COOKIE UNITS HAVING INTERIOR DESIGNS
Attorney Docket No.: 6109US-CIP1
Pub. No.: US 2005/0196505 A1
Pub. Date: September 8, 2005

This is a decision on the request for a corrected patent application publication under 37 CFR 1.221(b), filed on January 6, 2006, for the above-identified application

The request is DISMISSED.

Applicant requests that the application be republished because the patent application publication contains material error, as information contained in the publication does not match the application as filed, specifically the benefit claim on the front page of the publication states the application no. 11/074, 189 is a CIP of 10/267,472, which is a CIP of 10/267,539 and not 11/074, 189 is a CIP of 10/267,472 and a CIP of 10/267,539, as stated in the first sentence of the specification.

37 CFR 1.221 (b) is applicable "only when the Office makes a material mistake which is apparent from Office records.... Any request for a corrected publication or revised patent application publication other than provided as provided in paragraph (a) of this section must be filed within two months from the date of the patent application publication. This period is not extendable." A material mistake must affect the public's ability to appreciate the technical disclosure of the patent application publication, to determine the scope of the patent application publication, or to determine the scope of the provisional rights that an applicant may seek to enforce upon issuance of a patent. [1]

The request for a corrected publication received on January 6, 2006, was not timely filed under 37 CFR 1.221(b).

[1] Changes to Implement Eighteen-Month Publication of Patent Applications, 65 FR 57023, 57038 (Sept. 20, 2000), 1239, Off. Gaz. Pat. Office Notices 63, 75 (Oct. 10, 2000) (final rule).

The error in the benefit claim on the front page of the publication is an Office mistake, but it is not a material mistake as required by 37 CFR 1.221(b). The error in the benefit claim on the front page of the publication is not a material mistake as the benefit claim is in the first line of the specification, as required by 37 CFR 1.78. The error in the benefit claim on the front page of the publication is not a material mistake because it does not affect the public's ability to appreciate the technical disclosure of the patent application publication, to determine the scope of the patent application publication or to determine the scope of the provisional rights that an applicant may seek to enforce upon issuance of a patent. Since, the first line of the specification contains the proper benefit claim, one can read and understand the content of the application and properly use the patent application publication as a prior art reference.

To assist the Office in correctly picking up the benefit claim, applicant should see the examples provided in MPEP 201.11.

On March 31, 2005 and June 2, 2005, Filing Receipts were mailed by the Office, which improperly listed the benefit claim. To avoid this type of problem in the future, applicant's representative should review the Filing Receipt and make a request for a Corrected Filing Receipt.

It would greatly benefit the Office if applicant did not provide a complete copy of the application as filed, as the Office already has a copy and it unnecessarily increases the cost to the Office. See 37 CFR 1.4(b). A request for corrected publication need only point out what was printed incorrectly in the application, where the error occurs in the publication and where the correct text is found in the application papers. Marked up relevant copies of the applications papers and the pre-grant publication may facilitate processing of the request. If it is not clear why the error is a material error, further explanation may be warranted.

The applicant is advised that a "request for republication of an application previously published" may be filed under 37 CFR 1.221 (a). Such a request for republication "must include a copy of the application compliance with the Office's electronic filing system requirements and be accompanied by the publication fee set forth in § 1.18 (d) and the processing fee set forth in § 1.17 (i)." If the request for republication does not comply with the electronic filing system requirements, the republication will not take place and the publication fee set forth in § 1.18 (d) will be refunded. The processing fee will be retained.

Any request for republication under 37 CFR 1.221(a), must be submitted via the EFS system and questions or request for reconsideration of the decision, should be addressed as follows:

By mail to: Mail Stop PGPUB
Commissioner for Patents
P.O. Box 1450
Alexandria, Va. 22313-1450

By facsimile: 571-273-8300

Inquiries relating to this matter may be directed to Mark Polutta at (571) 272-7709 (voice).

Mark O. Polutta
Senior Legal Advisor
Office of Patent Legal Administration
Office of the Deputy Commissioner
for Patent Examination Policy

Enclosure: Corrected Filing Receipt

UNITED STATES PATENT AND TRADEMARK OFFICE

UNITED STATES DEPARTMENT OF COMMERCE
United States Patent and Trademark Office
Address: COMMISSIONER FOR PATENTS
P.O. Box 1450
Alexandria, Virginia 22313-1450
www.uspto.gov

APPL NO.	FILING OR 371 (c) DATE	ART UNIT	FIL FEE REC'D	ATTY.DOCKET NO	DRAWINGS	TOT CLMS	IND CLMS
11/074,189	03/07/2005	1761	1630	P6109US-CIP1	3	22	5

CONFIRMATION NO. 2468

CORRECTED FILING RECEIPT

OC000000017908429

Arlene Hornilla
General Mills
Number One General Mills Blvd.
P.O. Box 1113
Minneapolis, MN 55440

Date Mailed: 01/25/2006

Receipt is acknowledged of this regular Patent Application. It will be considered in its order and you will be notified as to the results of the examination. Be sure to provide the U.S. APPLICATION NUMBER, FILING DATE, NAME OF APPLICANT, and TITLE OF INVENTION when inquiring about this application. Fees transmitted by check or draft are subject to collection. Please verify the accuracy of the data presented on this receipt. **If an error is noted on this Filing Receipt, please mail to the Commissioner for Patents P.O. Box 1450 Alexandria Va 22313-1450. Please provide a copy of this Filing Receipt with the changes noted thereon. If you received a "Notice to File Missing Parts" for this application, please submit any corrections to this Filing Receipt with your reply to the Notice. When the USPTO processes the reply to the Notice, the USPTO will generate another Filing Receipt incorporating the requested corrections (if appropriate).**

Applicant(s)

Susan M. Hayes-Jacobson, Minneapolis, MN;
Julie A. Piasecki, Coon Rapids, MN;
Glenn O. Rasmussen, Champlin, MN;
Cara J. Sekerak, Lakeville, MN;
Julia M. Schmelzer, St. Louis Park, MN;
Lanette M. Shaffer, Hudson, WI;

Assignment For Published Patent Application

The Pillsbury Company

Power of Attorney:

John O'Toole–28336
Douglas Taylor–32945
Peter Dardi–39650
Kam Law–44205
Arlene Hornilla–44776
Annette Frawley–50280
J Haun–53003

Domestic Priority data as claimed by applicant

This application is a CIP of 10/267,472 10/09/2002 ABN
and is a CIP of 10/267,539 10/09/2002 ABN

Foreign Applications

If Required, Foreign Filing License Granted: 03/30/2005

The country code and number of your priority application, to be used for filing abroad under the Paris Convention, is US11/074,189

Projected Publication Date: Not Applicable

Non-Publication Request: No

Early Publication Request: No

Title

Extruded cookie units having interior designs

Preliminary Class

426

PROTECTING YOUR INVENTION OUTSIDE THE UNITED STATES

Since the rights granted by a U.S. patent extend only throughout the territory of the United States and have no effect in a foreign country, an inventor who wishes patent protection in another country must apply for a patent in a specific country or in regional patent offices. Applicants may wish to consider the filing of an international application under the Patent Cooperation Treaty (PCT). An international (PCT) application generally has the same effect as a regular national patent application in each PCT-member country. The PCT process **simplifies** the filing of patent applications on the same invention in member countries, but **does not result** in a grant of "an international patent" and does not eliminate the need of applicants to file additional documents and fees in countries where patent protection is desired.

Almost every country has its own patent law, and a person desiring a patent in a particular country must make an application for patent in that country in accordance with its particular laws. Since the laws of many countries differ in various respects from the patent law of the United States, applicants are advised to seek guidance from specific foreign countries to ensure that patent rights are not lost prematurely.

Applicants also are advised that in the case of inventions made in the United States, the Director of the USPTO must issue a license before applicants can apply for a patent in a foreign country. The filing of a U.S. patent application serves as a request for a foreign filing license. The application's filing receipt contains further information and guidance as to the status of applicant's license for foreign filing.

Applicants may wish to consult the USPTO booklet, "General Information Concerning Patents" (specifically, the section entitled "Treaties and Foreign Patents") for more information on timeframes and deadlines for filing foreign patent applications. The guide is available either by contacting the USPTO Contact Center at 800-786-9199, or it can be viewed on the USPTO website at http://www.uspto.gov/web/offices/pac/doc/general/index.html.

For information on preventing theft of your intellectual property (patents, trademarks and copyrights), you may wish to consult the U.S. Government website, http://www.stopfakes.gov. Part of a Department of Commerce initiative, this website includes self-help "toolkits" giving innovators guidance on how to protect intellectual property in specific countries such as China, Korea and Mexico. For questions regarding patent enforcement issues, applicants may call the U.S. Government hotline at 1-866-999-HALT (1-866-999-4158).

LICENSE FOR FOREIGN FILING UNDER
Title 35, United States Code, Section 184
Title 37, Code of Federal Regulations, 5.11 & 5.15

GRANTED

The applicant has been granted a license under 35 U.S.C. 184, if the phrase "IF REQUIRED, FOREIGN FILING LICENSE GRANTED" followed by a date appears on this form. Such licenses are issued in all applications where the conditions for issuance of a license have been met, regardless of whether or not a license may be required as set forth in 37 CFR 5.15. The scope and limitations of this license are set forth in 37 CFR 5.15(a) unless an earlier license has been issued under 37 CFR 5.15(b). The license is subject to revocation upon written notification. The date indicated is the effective date of the license, unless an earlier license of similar scope has been granted under 37 CFR 5.13 or 5.14.

This license is to be retained by the licensee and may be used at any time on or after the effective date thereof unless it is revoked. This license is automatically transferred to any related applications(s) filed under 37 CFR 1.53(d). This license is not retroactive.

The grant of a license does not in any way lessen the responsibility of a licensee for the security of the subject matter as imposed by any Government contract or the provisions of existing laws relating to espionage and the national security or the export of technical data. Licensees should apprise themselves of current regulations especially with respect to certain countries, of other agencies, particularly the Office of Defense Trade Controls, Department of State (with respect to Arms, Munitions and Implements of War (22 CFR 121-128)); the Bureau of Industry and Security, Department of Commerce (15 CFR parts 730-774); the Office of Foreign Assets Control, Department of Treasury (31 CFR Parts 500+) and the Department of Energy.

NOT GRANTED

No license under 35 U.S.C. 184 has been granted at this time, if the phrase "IF REQUIRED, FOREIGN FILING LICENSE GRANTED" DOES NOT appear on this form. Applicant may still petition for a license under 37 CFR 5.12, if a license is desired before the expiration of 6 months from the filing date of the application. If 6 months has lapsed from the filing date of this application and the licensee has not received any indication of a secrecy order under 35 U.S.C. 181, the licensee may foreign file the application pursuant to 37 CFR 5.15(b).

UNITED STATES PATENT AND TRADEMARK OFFICE

Commissioner for Patents
United States Patent and Trademark Office
P.O. Box 1450
Alexandria, VA 22313-1450
www.uspto.gov

JACKSON WALKER LLP
901 MAIN STREET
SUITE 6000
DALLAS, TX 75202-3797

COPY MAILED
JAN 19 2010

In re Application of	:	
Robert F. Hofmann	:	
Application No. 11/074,191	:	DECISION ON PETITION
Filed: March 7, 2005	:	TO WITHDRAW
Attorney Docket No. 103336.00027 (TORQ-0001 D	:	FROM RECORD

This is a decision on the Request to Withdraw as attorney or agent of record under 37 C.F.R. § 1.36(b), filed November 16, 2009.

The request is **APPROVED**.

The request was signed by T. Ling Chwang on behalf of all of the practitioners of record.

Applicant is reminded that there is no attorney of record at this time.

All future correspondence will be directed to inventor Robert F. Hofmann at the address indicated below.

Telephone inquiries concerning this decision should be directed to Irvin Dingle at (571) 272-3210.

Irvin Dingle
Petitions Examiner
Office of Petitions

cc: Robert F. Hofmann
3105 Toro Ring
Austin, TX 78746-2432

UNITED STATES PATENT AND TRADEMARK OFFICE

UNITED STATES DEPARTMENT OF COMMERCE
United States Patent and Trademark Office
Address: COMMISSIONER FOR PATENTS
P.O. Box 1450
Alexandria, Virginia 22313-1450
www.uspto.gov

APPLICATION NUMBER	FILING OR 371(C) DATE	FIRST NAMED APPLICANT	ATTY. DOCKET NO./TITLE
11/074,191	03/07/2005	Robert F. Hofmann	103336.00027 (TORQ-0001 D

CONFIRMATION NO. 2498

POWER OF ATTORNEY NOTICE

25555
JACKSON WALKER LLP
901 MAIN STREET
SUITE 6000
DALLAS, TX 75202-3797

OC000000039654851

Date Mailed: 01/19/2010

NOTICE REGARDING CHANGE OF POWER OF ATTORNEY

This is in response to the Power of Attorney filed 11/16/2009.

- The withdrawal as attorney in this application has been accepted. Future correspondence will be mailed to the new address of record. 37 CFR 1.33.

/idingle/

Office of Data Management, Application Assistance Unit (571) 272-4000, or (571) 272-4200, or 1-888-786-0101

UNITED STATES PATENT AND TRADEMARK OFFICE

UNITED STATES DEPARTMENT OF COMMERCE
United States Patent and Trademark Office
Address: COMMISSIONER FOR PATENTS
P.O. Box 1450
Alexandria, Virginia 22313-1450
www.uspto.gov

APPLICATION NUMBER	FILING OR 371(C) DATE	FIRST NAMED APPLICANT	ATTY. DOCKET NO./TITLE
11/074,191	03/07/2005	Robert F. Hofmann	103336.00027 (TORQ-0001 D

CONFIRMATION NO. 2498

Robert F. Hofmann
3105 Toro Ring
Austin, TX 78746-2432

POA ACCEPTANCE LETTER

OC000000039654887

Date Mailed: 01/19/2010

NOTICE OF ACCEPTANCE OF POWER OF ATTORNEY

This is in response to the Power of Attorney filed 11/16/2009.

The Power of Attorney in this application is accepted. Correspondence in this application will be mailed to the above address as provided by 37 CFR 1.33.

/idingle/

Office of Data Management, Application Assistance Unit (571) 272-4000, or (571) 272-4200, or 1-888-786-0101

UNITED STATES PATENT AND TRADEMARK OFFICE

Commissioner for Patents
United States Patent and Trademark Office
P.O. Box 1450
Alexandria, VA 22313-1450
www.uspto.gov

THADDIUS J. CARVIS
102 NORTH KING STREET
LEESBURG VA 20176

COPY MAILED

APR 13 2007

OFFICE OF PETITIONS

In re Application of	:	
James M. Valentine, et al.	:	
Application No. 11/074,199	:	DECISION ON PETITION
Filed: March 7, 2005	:	
Attorney Docket No. CDT PA113 US	:	

This is a decision on the petition under the unintentional provisions of 37 CFR 1.137(b), filed December 22, 2006 and supplemented on February 16, 2007, to revive the above-identified application.

The petition is **GRANTED**.

This application became abandoned for failure to timely pay the issue and publication fees on or before December 18, 2006, as required by the Notice of Allowance and Fee(s) Due, mailed September 18, 2006. Accordingly, the date of abandonment of this application is December 19, 2006.

The petition satisfies the requirements of 37 CFR 1.137(b) in that petitioner has supplied (1) the reply in the form of payment of the issue fee of $700 and the publication fee of $300, (2) the petition fee of $750; and (3) a proper statement of unintentional delay.

It is noted that the petition fee was paid twice in this application. Since the $750 petition fee was submitted with the petition on February 16, 2007 and appears to be a duplicate, this fee is unnecessary and will be credited to petitioner's deposit account 50-2735.

Telephone inquiries concerning this decision should be directed to April Wise at (571) 272-1642.

This application is being referred to Publishing Division for processing into a patent.

Irvin Dingle
Petitions Examiner
Office of Petitions

UNITED STATES PATENT AND TRADEMARK OFFICE

Commissioner for Patents
United States Patent and Trademark Office
P.O. Box 1450
Alexandria, VA 22313-1450
www.uspto.gov

PATRICH W. RASCHE
ARMSTRONG TEASDALE LLP
ONE METROPOLITAN SQUARE
SUITE 2600
ST. LOUIS, MO 63102-2740

COPY MAILED

MAR 0 9 2007

OFFICE OF PETITIONS

In re Application of	:
Akira Hagiwara et al	:
Application No. 11/074,228	: DECISION GRANTING PETITION
Filed: April 8, 2005	: UNDER 37 CFR 1.313(c)(2)
Attorney Docket No. 16CT-JP04039	:

This is a decision on the petition, filed March 8, 2007, under 37 CFR 1.313(c)(2) to withdraw the above-identified application from issue after payment of the issue fee.

The petition is **GRANTED**.

The above-identified application is withdrawn from issue for consideration of a submission under 37 CFR 1.114 (request for continued examination). See 37 CFR 1.313(c)(2).

Petitioner is advised that the issue fee paid on January 26, 2007 in the above-identified application cannot be refunded. If, however, the above-identified application is again allowed, petitioner may request that it be applied towards the issue fee required by the new Notice of Allowance.[1]

Telephone inquiries should be directed to the undersigned at (571) 272-3218.

This matter is being referred to Technology Center AU 2882 for processing of the request for continued examination under 37 CFR 1.114 and for consideration of the Information Disclosure Statement.

Frances Hicks
Petitions Examiner
Office of Petitions

C:\Documents and Settings\FHicks\My Documents\470\Mar10\074228.wpd

---

[1] *The request to apply the issue fee to the new Notice may be satisfied by completing and returning the new Part B – Fee(s) Transmittal Form (along with any balance due at the time of submission). Petitioner is advised that the Issue Fee Transmittal Form* ***must*** *be completed and timely submitted to avoid abandonment.*

UNITED STATES PATENT AND TRADEMARK OFFICE

Commissioner for Patents
United States Patent and Trademark Office
P.O. Box 1450
Alexandria, VA 22313-1450
www.uspto.gov

Pepper Hamilton, LLP
One Mellon Center, 50th Floor
500 Grant Street
Pittsburgh, PA 15219

COPY MAILED

OCT 2 2 2008

OFFICE OF PETITIONS

In re Application of	:	
William K. McCroskey et al.	:	
Application No. 11/074,239	:	DECISION ON PETITION
Filed: March 7, 2005	:	TO WITHDRAW
Attorney Docket No. 133224.00101	:	FROM RECORD
	:	

This is a decision on the Request to Withdraw as attorney or agent under 37 C.F.R. § 1.36(b) or 37 C.F.R. § 10.40 filed October 3, 2008.

The request is **APPROVED**.

A grantable request to withdraw as attorney/agent of record must be signed by every attorney/agent seeking to withdraw or contain a clear indication that one attorney is signing on behalf of another/others. The Office requires the practitioner(s) requesting withdrawal to certify that he, she, or they have: (1) given reasonable notice to the client, prior to the expiration of the response period, that the practitioner(s) intends to withdraw from employment; (2) delivered to the client or a duly authorized representative of the client all papers and property (including funds) to which the client is entitled; and (3) notified the client of any responses that may be due and the time frame within which the client must respond, pursuant 37 CFR 10.40(c).

The request was signed by Raymond A. Miller, on behalf of all attorneys/agents associated with customer number 21269. All attorneys/agents associated with customer number 21269 have been withdrawn.

Applicant is reminded that there is no attorney of record at this time.

The correspondence address has been changed to that of the assignee and is copied below.

Telephone inquiries concerning this decision should be directed to Kimberly Inabinet at 571-272-4618.

Kimberly Inabinet
Kimberly Inabinet
Petitions Examiner
Office of Petitions

cc: William K. McCroskey
Fused Multimodality Imaging, Ltd.
30500 Aurora Road, Suite 180
Solon, OH 44139-1805

UNITED STATES PATENT AND TRADEMARK OFFICE

UNITED STATES DEPARTMENT OF COMMERCE
United States Patent and Trademark Office
Address: COMMISSIONER FOR PATENTS
P.O. Box 1450
Alexandria, Virginia 22313-1450
www.uspto.gov

APPLICATION NUMBER	FILING OR 371(C) DATE	FIRST NAMED APPLICANT	ATTY. DOCKET NO./TITLE
11/074,239	03/07/2005	William K. McCroskey	

CONFIRMATION NO. 6637

POWER OF ATTORNEY NOTICE

21269
PEPPER HAMILTON LLP
ONE MELLON CENTER, 50TH FLOOR
500 GRANT STREET
PITTSBURGH, PA 15219

OC000000032730932

Date Mailed: 10/22/2008

NOTICE REGARDING CHANGE OF POWER OF ATTORNEY

This is in response to the Power of Attorney filed 10/02/2008.

- The withdrawal as attorney in this application has been accepted. Future correspondence will be mailed to the new address of record. 37 CFR 1.33.

/kainabinet/

Office of Data Management, Application Assistance Unit (571) 272-4000, or (571) 272-4200, or 1-888-786-0101

UNITED STATES PATENT AND TRADEMARK OFFICE

Commissioner for Patents
United States Patent and Trademark Office
P.O. Box 1450
Alexandria, VA 22313-1450
www.uspto.gov

MARK LEVY
PRESS BUILDING – SUITE 902
19 CHENANGO STREET
BINGHAMTON, NY 13901

COPY MAILED

AUG 1 5 2006

OFFICE OF PETITIONS

In re Application of	:	
Shin-yi Hsu	:	
Application No. 11/074,245	:	DECISION ON PETITION
Filed: March 7, 2005	:	TO MAKE SPECIAL UNDER
Attorney Docket No. H-674	:	37 CFR 1.102(c)(1)
	:	

This is a decision on the petition under 37 CFR 1.102(c)(1), filed March 7, 2005, to make the above-identified application special based on applicant's age as set forth in M.P.E.P. § 708.02, Section IV.

The petition is **GRANTED**.

A grantable petition to make an application special under 37 CFR 1.102(c)(1) and MPEP § 708.02, Section IV: Applicant's Age must be accompanied by evidence showing that at least one of the applicants is 65 years of age, or more, such as a birth certificate or a statement by applicant. No fee is required

The instant petition includes a copy of Inventor Shin-yi Hsu's driver license showing that he is over 65 years of age. Accordingly, the above-identified application has been accorded "special" status.

Telephone inquiries concerning this decision should be directed to Irvin Dingle at 571-272-3210.

All other inquiries concerning either the examination or status of the application should be directed to the Technology Center.

The application is being forwarded to the Technology Center Art Unit 2624 for action on the merits commensurate with this decision.

Irvin Dingle
Petitions Examiner
Office of Petitions

UNITED STATES PATENT AND TRADEMARK OFFICE

COMMISSIONER FOR PATENTS
UNITED STATES PATENT AND TRADEMARK OFFICE
P.O. BOX 1450
ALEXANDRIA, VA 22313-1450
www.uspto.gov

MARK LEVY & ASSOCIATES, PLLC
PRESS BUILDING, SUITE 902
19 CHENANGO STREET
BINGHAMTON NY 13901

MAILED

SEP - 8 2006

DIRECTOR'S OFFICE
TECHNOLOGY CENTER 2600

In re Application of :
HSU, SHIN-YI :
Serial No.: **11/074,245** :
Filed: March 7, 2005 : DECISION ON PETITION
For: **METHOD OF RECOGNIZING AN OBJECT IN AN IMAGE USING MULTI-SENSOR INTEGRATION THROUGH CONDITIONALLY OPTIMAL GEOSCENE GENERATION AND REGISTRATION** : *ACCEPTANCE OF COLOR PHOTOGRAPHS*

This is a decision on the petition pursuant to 37 C.F.R. § 1.183 which has been treated as a petition under 37 C.F.R. § 1.84(a)(2), filed, March 7, 2005, requesting acceptance of color drawings.

The petition requests that the color drawings identified in Figures 1 – 12, be accepted in lieu of black and white drawings.

A grantable petition under 37 C.F.R. §1.84(a)(2) must be accompanied by a fee set forth under 37 C.F.R. § 1.17(h), 3 (three) set of the color drawings in question, and the specification must contain, or be amended to contain, the following language as the first paragraph in that portion of the specification relating to the brief description of the drawings:

"The file of this patent contains at least one drawing executed in color. Copies of this patent with color drawing(s) will be provided by the Patent and Trademark Office upon request and payment of the necessary fee."

The petition is **GRANTED**.

Dwayne Bost
Special Program Examiner
Technology Center 2600
Communications

UNITED STATES PATENT AND TRADEMARK OFFICE

COMMISSIONER FOR PATENTS
UNITED STATES PATENT AND TRADEMARK OFFICE
P.O. BOX 1450
ALEXANDRIA, VA 22313-1450
www.uspto.gov

Philip S. Johnson
Johnson & Johnson
One Johnson & Johnson Plaza
New Brunswick, NJ 08933-7003

COPY MAILED

OCT 1 4 2005

OFFICE OF PETITIONS

In re Application of	:	
Muriel Morelli, et al.	:	
Application No. 11/074,281	:	DECISION GRANTING
Filed: March 7, 2005	:	PETITION
Attorney Docket No. J&J 5134	:	

This is a decision on the petition filed June 30, 2005, requesting that the above-identified application be accorded a filing date of March 7, 2005, rather than the presently accorded date of March 5, 2005. The petition is properly treated as a petition under 37 CFR 1.10(c).

Petitioner alleges that the application was deposited in Express Mail Service on March 7, 2005. Petitioner states that the Express Mail Label bearing the "date-in" and the U. S. Postal Service (USPS) date stamp has been lost. Therefore, the petition is accompanied by a copy of the results from a search of the "Track and Confirm" on the USPS website which shows Express Mail receipt No. EV138494419US (the same Express Mail number found on the original application papers located in the official file) was deposited with the USPS as Express Mail on March 7, 2005.

The Office considers the date the paper or fee is shown to have been deposited as "Express Mail" to be the "date-in" on the Express Mail label, MPEP 513. The evidence is convincing that the application was deposited as "Express Mail" with the U. S. Postal Service on March 7, 2005.

In view of the above, the petition is **GRANTED**.

This application file is being forwarded to the Office of Initial Patent Examination (OIPE) for correction of the filing date to **March 7, 2005** and for issuance of a corrected filing receipt.

Telephone inquiries relating to this decision should be directed to the undersigned at (571) 272-3223. Telephone inquiries related to OIPE processing should be directed to their hotline at (703) 308-1202.

Marianne E. Jenkins
Marianne E. Jenkins
Petitions Examiner
Office of Petitions

UNITED STATES PATENT AND TRADEMARK OFFICE

Commissioner for Patents
United States Patent and Trademark Office
P.O. Box 1450
Alexandria, VA 22313-1450
www.uspto.gov

PHILIP S JOHNSON
JOHNSON & JOHNSON
ONE JOHNSON & JOHNSON PLAZA
NEW BRUNSWICK NJ 08933-7003

COPY MAILED
AUG 0 7 2006
OFFICE OF PETITIONS

In re Application of	:
Morelli, et al.	:
Application No. 11/074,281	: DECISION GRANTING
Filed: March 7, 2005	: PETITION
Attorney Docket No. J&J5134USCON	:

This is a decision on the petition to revive under 37 CFR 1.137(b), filed March 31, 2006.

The petition is **GRANTED**.

The application became abandoned for failure to submit the oath or declaration and late surcharge, as required by the Notice to File Missing Parts mailed April 1, 2005. This Notice set an extendable period for reply of two (2) months. No reply having been received, the application became abandoned on June 2, 2005. A Notice of Abandonment was mailed on December 8, 2005.

With the instant petition, petitioner paid the petition fee, submitted an executed declaration and the surcharge for its late filing, and made the proper statement of unintentional delay.

The matter is being forwarded to the Office of Initial Patent Examination for pre-examination processing.

Telephone inquiries specific to this decision may be directed to the undersigned at (571)272-3207.

Cliff Congo
Petitions Attorney
Office of Petitions

UNITED STATES PATENT AND TRADEMARK OFFICE

UNITED STATES DEPARTMENT OF COMMERCE
United States Patent and Trademark Office
Address: COMMISSIONER FOR PATENTS
P.O. Box 1450
Alexandria, Virginia 22313-1450
www.uspto.gov

SALIWANCHIK LLOYD & SALIWANCHIK
A PROFESSIONAL ASSOCIATION
PO Box 142950
GAINESVILLE, FL 32614

Mail Date: 04/20/2010

Applicant	: Christopher D. Batich	: DECISION ON REQUEST FOR
Patent Number	: 7601525	: RECALCULATION of PATENT
Issue Date	: 10/13/2009	: TERM ADJUSTMENT IN VIEW
Appliction No	: 11/074,285	: OF WYETH AND NOTICE OF INTENT TO
Filed	: 03/07/2005	: ISSUE CERTIFICATE OF CORRECTION
		:

The Request for Recalculation is **GRANTED** to the extent indicated.

The patent term adjustment has been determined to be **533** days. The USPTO will *sua sponte* issue a certificate of correction reflecting the amount of PTA days determined by the recalculation.

Prior to the issuance of the certificate of correction, the USPTO will afford patentee an opportunity to be heard and request reconsideration. Accordingly, patentee has **one month or thirty (30) days**, whichever is longer, to file a request for reconsideration of this patent term adjustment calculation. See 35 U.S.C. 154(b)(3)(B)(ii) and 37 CFR 1.322(a)(4). No extensions of time will be granted under 37 CFR 1.136.

Patentee should use document code PET.OP if electronically filing a request for reconsideration of this patent term adjustment calculation. The patentee must also include the information required by 37 CFR 1.705(b)(2) and the fee required by 37 CFR 1.18(e). If patentee does not file a timely request for reconsideration of this patent term adjustment calculation including the information required by 37 CFR 1.705(b)(2) and the fee required by 37 CFR 1.18(e), the USPTO will issue a certificate of correction reflecting the PTA determination noted above.

Patentee should be aware that in order to preserve the right to review in the United States District Court for the District of Columbia of the USPTO patent term adjustment determination, patentee must ensure that he or she also take the steps required under 35 U.S.C. 154(b)(4)(A) in a timely manner. Nothing in the request for recalculation should be construed as providing an alternative time frame for commencing a civil action under 35 U.S.C. 154(b)(4)(A).

Any questions concerning this decision should be directed to the Office of Patent Legal Administration at 571-272-7702.

UNITED STATES PATENT AND TRADEMARK OFFICE

Commissioner for Patents
United States Patent and Trademark Office
P.O. Box 1450
Alexandria, VA 22313-1450
www.uspto.gov

Hamilton, Brook, Smith & Reynolds, P.C.
530 Virginia Road
P.O. Box 9133
Concord, MA 01742-9133

COPY MAILED

JUN 0 5 2009

OFFICE OF PETITIONS

In re Application of	:	
LeNoir E. Zaiser et al.	:	
Application No. 11/074,295	:	DECISION ON PETITION
Filed: March 7, 2005	:	TO WITHDRAW
Attorney Docket No. 2173.2010-001	:	FROM RECORD
	:	

This is a decision on the Request to Withdraw as attorney or agent of record under 37 C.F.R. § 1.36(b), filed February 6, 2006.

The request is **moot because a revocation of power of attorney has been filed**.

A review of the file record indicates that the power of attorney to David J. Thibodeau, Jr. and all attorneys/agents of record has been revoked by the assignee of the patent application on February 17, 2006. Accordingly, the request to withdraw under 37 C.F.R. § 1.36(b) is moot.

All future communications from the Office will continue to be directed to the below-listed address until otherwise notified by applicant.

Telephone inquires concerning this decision should be directed to Kimberly Inabinet at 571-272-4618.

Kimberly Inabinet
Petitions Examiner
Office of Petitions

cc: R.D. JOHNSON & ASSOCIATES, P.C.
20 PICKERING STREET
P.O.BOX 920353
NEEDHAM MA 02492

UNITED STATES PATENT AND TRADEMARK OFFICE

Commissioner for Patents
United States Patent and Trademark Office
P.O. Box 1450
Alexandria, VA 22313-1450
www.uspto.gov

MORRISON & FOERSTER LLP
755 PAGE MILL RD
PALO ALTO, CA 94304-1018

COPY MAILED
DEC 20 2006
OFFICE OF PETITIONS

In re Application of	:	
LIU, et al.	:	
Application No. 11/074,297	:	DECISION ON PETITION
Filed: March 07, 2005	:	TO WITHDRAW
Attorney Docket No. 584682002200	:	FROM RECORD
	:	

This is a decision on the Request to Withdraw as attorney or agent of record under 37 C.F.R. § 1.36(b), filed October 12, 2006.

The request is **APPROVED**.

A grantable request to withdraw as attorney/agent of record must be signed by every attorney/agent seeking to withdraw or contain a clear indication that one attorney is signing on behalf of another/others. A request to withdraw will not be approved unless at least 30 (thirty) days would remain between the date of approval and the later of the expiration date of a time to file a response or the expiration date of the maximum time period which can be extended under 37 C.F.R. § 1.136(a).

The request was signed by Charles D. Holland on behalf of all attorneys of record who are associated with Customer No. 25226. All attorneys/agents associated with the Customer No. 25226 have been withdrawn.

Applicant is reminded that there is no attorney of record at this time.

The request to change the correspondence of record is not acceptable as the requested correspondence address is not that of: (1) the first named signing inventor; or (2) an intervening assignee of the entire interest under 37 C.F.R 3.71. All future communications from the Office will be directed to the first named signing inventor at the first copied address below until otherwise properly notified by the applicant.

There is no outstanding Office action that requires a reply from the applicant.

Telephone inquiries concerning this decision should be directed to the undersigned at 571-272-6825.

Patricia Volpe
Petitions Examiner
Office of Petitions

cc: FRANK ZHENHUAN LIU
353 ST. MARTIN STREET
REDWOOD CITY, CA 94065

cc: TOM COUNTS
PAUL HASTINGS
55 SECOND STREET
TWENTY-FOURTH FLOOR
SAN FRANCISCO, CA 94105

UNITED STATES PATENT AND TRADEMARK OFFICE

Commissioner for Patents
United States Patent and Trademark Office
P.O. Box 1450
Alexandria, VA 22313-1450
www.uspto.gov

PAUL, HASTINGS, JANOFSKY & WALKER, LLP
875 15TH STREET, NW
WASHINGTON, DC 2005

MAILED

FEB 27 2009

OFFICE OF PETITIONS

In re Application of	:	
Frank Zhenhuan LIU, et al	:	
Application No. 11/074,297	:	DECISION ON PETITION
Filed: March 7, 2005	:	TO WITHDRAW
Attorney Docket No. 018563-015500US	:	FROM RECORD
	:	

This is a decision on the Request to Withdraw as attorney or agent of record under 37 C.F.R. § 1.36(b), filed January 21, 2009.

The request is **NOT APPROVED** as moot.

A review of the file record indicates that the power of attorney to Paul, Hastings, Janofsky & Walker LLP, has been revoked by the assignee of the patent application on February 9, 2009. Accordingly, the request to withdraw under 37 C.F.R. § 1.36(b) is moot.

All future communications from the Office will be directed to the address below until otherwise properly notified by the applicant.

Telephone inquires concerning this decision should be directed to undersigned at 571-272- 6735.

Diane Goodwyn
Petitions Examiner
Office of Petitions

cc: ALIGN TECHNOLOGY, INC.
MICHAEL T. ROSATO, TOWNSEND AND
TOWNSEND AND CREW LLP
1420 FIFTH AVE., SUITE 4400
SEATTLE, WA 98101-2325

cc: MARTIN R. BADER, ESQ.
P.O. BOX 919092
SAN DIEGO, CA 92191

UNITED STATES PATENT AND TRADEMARK OFFICE

Commissioner for Patents
United States Patent and Trademark Office
P.O. Box 1450
Alexandria, VA 22313-1450
www.uspto.gov

PAUL, HASTINGS, JANOFSKY & WALKER, LLP
875 15TH STREET, NW
WASHINGTON, DC 2005

MAILED

FEB 27 2009

OFFICE OF PETITIONS

In re Application of	:	
Huafeng WEN	:	
Application No. 11/074,298	:	DECISION ON PETITION
Filed: March 7, 2005	:	TO WITHDRAW
Attorney Docket No. 71784.03001	:	FROM RECORD
	:	

This is a decision on the Request to Withdraw as attorney or agent of record under 37 C.F.R. § 1.36(b), filed January 21, 2009.

The request is **NOT APPROVED** as moot.

A review of the file record indicates that the power of attorney to Paul, Hastings, Janofsky & Walker LLP, has been revoked by the assignee of the patent application on February 9, 2009. Accordingly, the request to withdraw under 37 C.F.R. § 1.36(b) is moot.

All future communications from the Office will be directed to the address below until otherwise properly notified by the applicant.

Telephone inquires concerning this decision should be directed to undersigned at 571-272- 6735.

Diane Goodwyn
Petitions Examiner
Office of Petitions

cc: ALIGN TECHNOLOGY, INC.
MICHAEL T. ROSATO, TOWNSEND AND
TOWNSEND AND CREW LLP
1420 FIFTH AVE., SUITE 4400
SEATTLE, WA 98101-2325

cc: MARTIN R. BADER, ESQ.
P.O. BOX 919092
SAN DIEGO, CA 92191

UNITED STATES PATENT AND TRADEMARK OFFICE

Commissioner for Patents
United States Patent and Trademark Office
P.O. Box 1450
Alexandria, VA 22313-1450
www.uspto.gov

MORRISON & FOERSTER LLP
755 PAGE MILL RD
PALO ALTO, CA 94304-1018

MAILED

JUN 17 2010

OFFICE OF PETITIONS

In re Application of	:	
Huafeng WEN	:	
Application No. 11/074,298	:	DECISION ON PETITION
Filed: March 7, 2005	:	TO WITHDRAW
Attorney Docket No. 018563-015600US	:	FROM RECORD
	:	

This is a decision on the Request to Withdraw as attorney or agent of record under 37 C.F.R. § 1.36(b), filed October 12, 2006.

The request is **NOT APPROVED** because it is moot.

A review of the file record indicates that the power of attorney to Charles D. Holland and all the attorneys of record, has been revoked by the assignee of the patent application on January 17, 2007. Accordingly, the request to withdraw under 37 C.F.R. § 1.36(b) is moot.

Telephone inquires concerning this decision should be directed to the undersigned at 571-272-6735.

/dcg/
Diane C. Goodwyn
Petitions Examiner
Office of Petitions

cc: CHARLES HOLLAND
K&L GATES
630 HANSEN WAY
PALO ALTO, CA 94304

UNITED STATES PATENT AND TRADEMARK OFFICE

Commissioner for Patents
United States Patent and Trademark Office
P.O. Box 1450
Alexandria, VA 22313-1450
www.uspto.gov

MORRISON & FOERSTER LLP
755 PAGE MILL RD
PALO ALTO CA 94304-1018

COPY MAILED

JUN 19 2007

OFFICE OF PETITIONS

In re Application of	:	
LIU, Frank Z. et al.	:	
Application No. 11/074,299	:	DECISION ON PETITION
Filed: March 07, 2005	:	TO WITHDRAW
Attorney Docket No. **584682002500**	:	FROM RECORD
	:	

This is a decision on the Request to Withdraw as attorney or agent of record under 37 C.F.R. § 1.36(b), filed October 12, 2006.

The request is **NOT APPROVED** as moot.

A review of the file record indicates that the power of attorney to Morrison & Foester LLP has been revoked by the assignee of the patent application on March 09, 2007. Accordingly, the request to withdraw under 37 C.F.R. § 1.36(b) is moot.

All future communications from the Office will continue to be directed to the below-listed address until otherwise notified by applicant.

Telephone inquires concerning this decision should be directed to Michelle R. Eason at 571-272-4231.

Terri Williams
Petitions Examiner
Office of Petitions

cc: **PAUL, HASTINGS, JANOFSKY & WALKER LLP**
P.O. BOX 919092
SAN DIEGO CA 92191-9092

UNITED STATES PATENT AND TRADEMARK OFFICE

Commissioner for Patents
United States Patent and Trademark Office
P.O. Box 1450
Alexandria, VA 22313-1450
www.uspto.gov

MORRISON & FOERSTER LLP
755 PAGE MILL RD
PALO ALTO CA 94304-1018

COPY MAILED

FEB 14 2007

OFFICE OF PETITIONS

In re Application of
Huafeng Wen
Application No. 11/074,300
Filed: March 7, 2005
Attorney Docket No. 584682002300

DECISION ON PETITION
TO WITHDRAW
FROM RECORD

This is a decision on the Request to Withdraw as attorney or agent of record under 37 C.F.R. § 1.36(b) filed October 12, 2006.

The request is **APPROVED**.

A grantable request to withdraw as attorney/agent of record must be signed by every attorney/agent seeking to withdraw or contain a clear indication that one attorney is signing on behalf of another/others. A request to withdraw will not be approved unless at least 30 (thirty) days would remain between the date of approval and the later of the expiration date of a time to file a response or the expiration date of the maximum time period which can be extended under 37 C.F.R. § 1.136(a).

The request was signed by Charles D. Holland on behalf of all attorneys of record who are associated with this application.

All attorneys/agents associated with this application have been withdrawn.

Applicant is reminded that there is no attorney of record at this time.

The request to change the correspondence of record is not acceptable as the requested correspondence address is not that of: (1) the first named signing inventor; or (2) an intervening assignee of the entire interest under 37 C.F.R 3.71. All future communications from the Office will be directed to the assignee of the entire interest at the first copied address below until otherwise properly notified by the applicant.

Telephone inquiries concerning this decision should be directed to undersigned at 571-272-1642.

April M. Wise
Petitions Examiner
Office of Petitions

cc: ORTHOCLEAR HOLDING, INC.
THE MILL MAL, PO BOX 92
WICKHAMS CAY 1, ROAD TOWN
TORTOLA, BRITISH VIRGIN ISLANDS

cc: TOM COUNTS
PAUL HASITNGS
55 SECOND STREET
TWENTY-FOURTH FLOOR
SAN FRANCISCO, CA 94105

UNITED STATES PATENT AND TRADEMARK OFFICE

UNITED STATES DEPARTMENT OF COMMERCE
United States Patent and Trademark Office
Address: COMMISSIONER FOR PATENTS
P.O. Box 1450
Alexandria, Virginia 22313-1450
www.uspto.gov

APPLICATION NUMBER	FILING OR 371 (c) DATE	FIRST NAMED APPLICANT	ATTY. DOCKET NO./TITLE
11/074,300	03/07/2005	Huafeng Wen	584682002300

CONFIRMATION NO. 6504

OC000000021938542

OC000000021938542

25226
MORRISON & FOERSTER LLP
755 PAGE MILL RD
PALO ALTO, CA 94304-1018

Date Mailed: 01/11/2007

NOTICE REGARDING CHANGE OF POWER OF ATTORNEY

This is in response to the Power of Attorney filed 10/12/2006.

- The withdrawal as attorney in this application has been accepted. Future correspondence will be mailed to the new address of record. 37 CFR 1.33.

APRIL M WISE
OF (571) 272-1642

FORMER ATTORNEY/AGENT COPY

UNITED STATES PATENT AND TRADEMARK OFFICE

Commissioner for Patents
United States Patent and Trademark Office
P.O. Box 1450
Alexandria, VA 22313-1450
www.uspto.gov

PAUL, HASTINGS, JANOFSKY & WALKER LLP
875 15TH STREET, NW
WASHINGTON DC 20005

COPY MAILED

MAR 30 2009

OFFICE OF PETITIONS

In re Application of	:	
WEN, Huafeng	:	
Application No. 11/074,300	:	DECISION ON PETITION
Filed: March 07, 2005	:	TO WITHDRAW
Attorney Docket No. **71784.03401.UTL1**	:	FROM RECORD
	:	

This is a decision on the Request to Withdraw as attorney or agent of record under 37 C.F.R. § 1.36(b), filed March 02, 2009.

The request is **APPROVED**.

A grantable request to withdraw as attorney/agent of record must be signed by every attorney/agent seeking to withdraw or contain a clear indication that one attorney is signing on behalf of another/others. The Office requires the practitioner(s) requesting withdrawal to certify that he, she, or they have: (1) given reasonable notice to the client, prior to the expiration of the response period, that the practitioner(s) intends to withdraw from employment; (2) delivered to the client or a duly authorized representative of the client all papers and property (including funds) to which the client is entitled; and (3) notified the client of any responses that may be due and the time frame within which the client must respond, pursuant 37 CFR 10.40(c).

The request was signed by Martin R. Bader on behalf of all attorneys of record who are associated with customer No. 36183. All attorneys/agents associated have been withdrawn. Applicant is reminded that there is no attorney of record at this time.

The correspondence address of record has been changed and the new correspondence address is the address indicated below.

There is an outstanding Office action mailed March 17, 2009 that requires a reply from the applicant.

Telephone inquiries concerning this decision should be directed to Michelle R. Eason at 571-272-4231.

Michelle R. Eason
Paralegal Specialist
Office of Petitions

cc: **ALIGN TECHNOLOGY, INC.**
881 MARTIN AVENUE
SANATA CLARA, CA 95050

UNITED STATES PATENT AND TRADEMARK OFFICE

Commissioner for Patents
United States Patent and Trademark Office
P.O. Box 1450
Alexandria, VA 22313-1450
www.uspto.gov

MORRISON & FOERSTER LLP
755 PAGE MILL RD
PALO ALTO CA 94304-1018

COPY MAILED

JAN 16 2007

OFFICE OF PETITIONS

In re Application of	:	
Frank Z. Liu, et al.	:	
Application No. 11/074,301	:	DECISION ON PETITION
Filed: March 7, 2005	:	TO WITHDRAW
Attorney Docket No. 84682002100	:	FROM RECORD
	:	

This is a decision on the Request to Withdraw as attorney or agent of record under 37 C.F.R. § 1.36(b) filed October 12, 2006.

The request is **APPROVED**.

A grantable request to withdraw as attorney/agent of record must be signed by every attorney/agent seeking to withdraw or contain a clear indication that one attorney is signing on behalf of another/others. A request to withdraw will not be approved unless at least 30 (thirty) days would remain between the date of approval and the later of the expiration date of a time to file a response or the expiration date of the maximum time period which can be extended under 37 C.F.R. § 1.136(a).

The request was signed by Charles D. Holland on behalf of all attorneys of record who are associated with this application.

All attorneys/agents associated with this application have been withdrawn.

Applicant is reminded that there is no attorney of record at this time.

The request to change the correspondence of record is not acceptable as the requested correspondence address is not that of: (1) the first named signing inventor; or (2) an intervening assignee of the entire interest under 37 C.F.R 3.71. All future communications from the Office will be directed to the assignee of the entire interest at the first copied address below until otherwise properly notified by the applicant.

Telephone inquiries concerning this decision should be directed to undersigned at 571-272-1642.

April M. Wise
Petitions Examiner
Office of Petitions

cc: ORTHOCLEAR HOLDING, INC.
THE MILL MAL, PO BOX 92
WICKHAMS CAY 1, ROAD TOWN
TORTOLA, BRITISH VIRGIN ISLANDS

cc: TOM COUNTS
PAUL HASITNGS
55 SECOND STREET
TWENTY-FOURTH FLOOR
SAN FRANCISCO, CA 94105

UNITED STATES PATENT AND TRADEMARK OFFICE

UNITED STATES DEPARTMENT OF COMMERCE
United States Patent and Trademark Office
Address: COMMISSIONER FOR PATENTS
P.O. Box 1450
Alexandria, Virginia 22313-1450
www.uspto.gov

APPLICATION NUMBER	FILING OR 371 (c) DATE	FIRST NAMED APPLICANT	ATTY. DOCKET NO./TITLE
11/074,301	03/07/2005	Frank Zhenhuan Liu	584682002100

CONFIRMATION NO. 6505

OC000000021936330

OC000000021936330

25226
MORRISON & FOERSTER LLP
755 PAGE MILL RD
PALO ALTO, CA 94304-1018

Date Mailed: 01/10/2007

NOTICE REGARDING CHANGE OF POWER OF ATTORNEY

This is in response to the Power of Attorney filed 10/12/2006.

- The withdrawal as attorney in this application has been accepted. Future correspondence will be mailed to the new address of record. 37 CFR 1.33.

APRIL M WISE
OP (571) 272-1642

FORMER ATTORNEY/AGENT COPY

UNITED STATES PATENT AND TRADEMARK OFFICE

Commissioner for Patents
United States Patent and Trademark Office
P.O. Box 1450
Alexandria, VA 22313-1450
www.uspto.gov

COPY MAILED

JUL 06 2007

OFFICE OF PETITIONS

Holland & Knight LLP
Attn: Stefan V. Stein/IP Dept.
Post Office Box 1288
Tampa, FL 33601-1288

In re Application of	:	
Robert Bury	:	
Application No. 11/074,303	:	DECISION ON PETITION
Filed: March 4, 2005	:	TO WITHDRAW
Attorney Docket No. 069952.00001	:	FROM RECORD

This is a decision on the Request to Withdraw as attorney or agent of record under 37 C.F.R. § 1.36(b), filed December 19, 2006.

The request is **APPROVED**.

A grantable request to withdraw as attorney/agent of record must be signed by every attorney/agent seeking to withdraw or contain a clear indication that one attorney is signing on behalf of another/others. A request to withdraw will not be approved unless at least 30 (thirty) days would remain between the date of approval and the later of the expiration date of a time to file a response or the expiration date of the maximum time period which can be extended under 37 C.F.R. § 1.136(a).

The request was signed by Michael J. Colitz on behalf of all attorneys of record.

All attorneys/agents have been withdrawn.

Applicant is reminded that there is no attorney of record at this time.

All future correspondence will be directed to the first named inventor Robert Bury at the address indicated below.

There is an outstanding Office action mailed February 13, 2007 that requires a reply from the applicant.

Telephone inquiries concerning this decision should be directed to Terri Williams at 571-272-2991.

T. Williams

Terri Williams
Petitions Examiner
Office of Petitions

cc: **Robert Bury**
14072 S. Pony Express Road
Draper, UT 84020-9570

UNITED STATES PATENT AND TRADEMARK OFFICE

UNITED STATES DEPARTMENT OF COMMERCE
United States Patent and Trademark Office
Address: COMMISSIONER FOR PATENTS
P.O. Box 1450
Alexandria, Virginia 22313-1450
www.uspto.gov

APPLICATION NUMBER	FILING OR 371 (c) DATE	FIRST NAMED APPLICANT	ATTY. DOCKET NO./TITLE
11/074,303	03/04/2005	Robert Bury	069952.00001

CONFIRMATION NO. 6519

OC000000024692462

34802
HOLLAND & KNIGHT LLP
ATTN: STEFAN V. STEIN/ IP DEPT.
POST OFFICE BOX 1288
TAMPA, FL 33601-1288

Date Mailed: 07/06/2007

NOTICE REGARDING CHANGE OF POWER OF ATTORNEY

This is in response to the Power of Attorney filed 12/19/2006.

- The withdrawal as attorney in this application has been accepted. Future correspondence will be mailed to the new address of record. 37 CFR 1.33.

J. Williams

Office of Initial Patent Examination (571) 272-4000, or 1-800-PTO-9199
FORMER ATTORNEY/AGENT COPY

UNITED STATES PATENT AND TRADEMARK OFFICE

Commissioner for Patents
United States Patent and Trademark Office
P.O. Box 1450
Alexandria, VA 22313-1450
www.uspto.gov

MAILED

APR 09 2010

OFFICE OF PETITIONS

KILPATRICK STOCKTON LLP -
46872
J. STEVEN GARDNER
1001 WEST FOURTH STREET
WINSTON-SALEM NC 27101

In re Application of	:	
Hasan	:	
Application No. 11/074,315	:	ON APPLICATION FOR
Filed: March 7, 2005	:	PATENT TERM ADJUSTMENT
Atty Docket No. 46877-313523	:	

This is in response to the Petition Regarding Patent Term Adjustment (PTA) Indicated in Notice of Allowance filed January 37 C.F.R. § 1.705(b) filed January 19, 2010. Applicant submits that the correct patent term adjustment to be indicated on the patent is three hundred forty-eight (348) days, not ninety-eight (98) days as calculated by the Office as of the mailing of the initial determination of patent term adjustment. Applicant requests this correction solely on the basis that the Office will take in excess of three years to issue this patent.

As the instant application for patent term adjustment requests reconsideration of the patent term adjustment as it relates to the Office's failure to issue the patent within 3 years of the filing date, the application for patent term adjustment under 37 CFR 1.705(b) is **DISMISSED as PREMATURE**.

Knowledge of the actual date the patent issues is required to calculate the amount, if any, of additional patent term patentee is entitled to for Office failure to issue the patent within 3 years. See § 1.702(b). This is true even where a request for continued examination (RCE) was filed. The computer will not undertake the § 1.702(b) calculation until the actual date of issuance of the patent has been determined. Likewise, the computer will not calculate any further Office delay under § 1.702(a)(4) or applicant delay under § 1.704(c)(10) until the

actual date of issuance of the patent has been determined. As such, the Office can not make a determination on the correctness of the patent term adjustment until the patent has issued.

Requesting reconsideration of the patent term adjustment to be indicated on the patent under 37 CFR 1.705(b) based on the initial determination of patent term adjustment and a projected issuance date of the patent or even the filing date of the request for continued examination is premature. Accordingly, it is appropriate to dismiss as premature such a request.

Rather than file an application for patent term adjustment under 37 CFR 1.705(b) contesting the 37 CFR 1.702(b) calculation at the time of the mailing of the notice of allowance, applicant is advised that he may wait until the time of the issuance of the patent and file a request for reconsideration of the patent term adjustment pursuant to 37 CFR 1.705(d). As the USPTO does not calculate the amount of time earned pursuant to 37 CFR 1.702(b) until the time of the issuance of the patent, the Office will consider any request for reconsideration of the patent term adjustment due to an error in the calculation of 37 CFR 1.702(b) to be timely if the request for reconsideration is filed within two months of the issuance of the patent. However, as to all other bases for contesting the initial determination of patent term adjustment received with the notice of allowance, applicant must timely file an application for patent term adjustment prior to the payment of the issue fee[1].

The Office acknowledges submission of the $200.00 fee set forth in 37 CFR 1.18(e) for consideration of the application for patent term adjustment under 37 CFR 1.705(b).

Any request for reconsideration of the patent term adjustment indicated on the patent must be timely filed within 2 months

---

[1] For example, if applicant disputes both the calculation of patent term adjustment under 37 CFR 1.702(a)(1) for Office failure to mail a first Office action or notice of allowance not later than fourteen months after the date on which the application was filed and under 37 CFR 1.702(b) for Office failure to issue a patent within three years of the actual filing date of the application, then applicant must still timely file an application for patent term adjustment prior to the payment of the issue fee to contest the calculation of Office delay in issuing a first Office action or notice of allowance. See 37 CFR 1.705(b) and 35 U.S.C. 154(b)(3)(B). A dispute as to the calculation of the §1.702(a)(1) period raised on request for reconsideration of patent term adjustment under 37 CFR 1.705(d) will be dismissed as untimely filed.

after issuance pursuant to 37 CFR 1.705(d) and must include payment of the required fee under 37 CFR 1.18(e).

The Office of Data Management has been advised of this decision. This application is being referred to the Office of Data Management for issuance of the patent.

Telephone inquiries specific to this decision should be directed to the undersigned at (571) 272-3230.

Shirene Willis Brantley

Shirene Willis Brantley
Senior Petitions Attorney
Office of Petitions

UNITED STATES PATENT AND TRADEMARK OFFICE

Commissioner for Patents
United States Patent and Trademark Office
P.O. Box 1450
Alexandria, VA 22313-1450
www.uspto.gov

PROSKAUER ROSE LLP
PATENT DEPARTMENT
1585 BROADWAY
NEW YORK NY 10036-8299

COPY MAILED

JUL 12 2006

OFFICE OF PETITIONS

In re Application of	:	
Palti, Yoram	:	
Application No. 11/074,318	:	ON PETITION
Filed: March 7, 2005	:	
Attorney Docket No. 65842-022	:	

This is a decision on the petition under 37 CFR 1.102(d), filed on July 18, 2006, to make the above-identified application special based on developing treatments and cures for HIV/AIDS or cancer as set forth in M.P.E.P. § 708.02, Section X.

The petition is **GRANTED**.

A grantable petition to make an application special under 37 CFR 1.102(d) and MPEP § 708.02, Section X: Inventions Relating to HIV/AIDS or cancer, must be accompanied by (1) the petition fee under 37 CFR 1.17(h); and (2) a satisfactory statement explaining how the invention contributes to the diagnosis, treatment or prevention of HIV/AIDS or cancer.

The instant petition includes a statement, which satisfies the above requirement, as well as a copy of an article, which "presents experimental results showing that Applicant's inventions results in significant slowing of tumor growth and destruction of tumor cells *in vivo*." Accordingly, the above-identified application has been accorded "special" status.

Telephone inquiries concerning this decision should be directed to Petitions Examiner Liana Chase at 571-272-3206.

All other inquiries concerning either the examination or status of the application should be directed to the Technology Center.

The application is being forwarded to the Technology Center Art Unit 1614 for action on the merits commensurate with this decision.

David Bucci
Petitions Examiner
Office of Petitions

UNITED STATES PATENT AND TRADEMARK OFFICE

UNITED STATES DEPARTMENT OF COMMERCE
United States Patent and Trademark Office
Address: COMMISSIONER FOR PATENTS
P.O. Box 1450
Alexandria, Virginia 22313-1450
www.uspto.gov

FISH & RICHARDSON PC
P.O. BOX 1022
MINNEAPOLIS, MN 55440-1022

Mail Date: 04/20/2010

Applicant	: Raymond C. Kurzweil	: DECISION ON REQUEST FOR
Patent Number	: 7596405	: RECALCULATION of PATENT
Issue Date	: 09/29/2009	: TERM ADJUSTMENT IN VIEW
Appliction No	: 11/074,320	: OF WYETH AND NOTICE OF INTENT TO
Filed	: 03/07/2005	: ISSUE CERTIFICATE OF CORRECTION
		:

The Request for Recalculation is **GRANTED** to the extent indicated.

The patent term adjustment has been determined to be **888** days. The USPTO will *sua sponte* issue a certificate of correction reflecting the amount of PTA days determined by the recalculation.

Prior to the issuance of the certificate of correction, the USPTO will afford patentee an opportunity to be heard and request reconsideration. Accordingly, patentee has **one month or thirty (30) days**, whichever is longer, to file a request for reconsideration of this patent term adjustment calculation. See 35 U.S.C. 154(b)(3)(B)(ii) and 37 CFR 1.322(a)(4). No extensions of time will be granted under 37 CFR 1.136.

Patentee should use document code PET.OP if electronically filing a request for reconsideration of this patent term adjustment calculation. The patentee must also include the information required by 37 CFR 1.705(b)(2) and the fee required by 37 CFR 1.18(e). If patentee does not file a timely request for reconsideration of this patent term adjustment calculation including the information required by 37 CFR 1.705(b)(2) and the fee required by 37 CFR 1.18(e), the USPTO will issue a certificate of correction reflecting the PTA determination noted above.

Patentee should be aware that in order to preserve the right to review in the United States District Court for the District of Columbia of the USPTO patent term adjustment determination, patentee must ensure that he or she also take the steps required under 35 U.S.C. 154(b)(4)(A) in a timely manner. Nothing in the request for recalculation should be construed as providing an alternative time frame for commencing a civil action under 35 U.S.C. 154(b)(4)(A).

Any questions concerning this decision should be directed to the Office of Patent Legal Administration at 571-272-7702.

UNITED STATES PATENT AND TRADEMARK OFFICE

COMMISSIONER FOR PATENTS
UNITED STATES PATENT AND TRADEMARK OFFICE
P.O. BOX 1450
ALEXANDRIA, VA 22313-1450
www.uspto.gov

HAHN LOESER & PARKS LLP
ONE GOJO PLAZA
SUITE 300
AKRON, OH 44311-1076

COPY MAILED

SEP 14 2005

OFFICE OF PETITIONS

In re Application of :
Klaus Töpfer :
Application No. 11/074,324 :
Filed: March 4, 2005 : ON PETITION
For: CLIP BUFFER :

This is a decision in response to the Petition to Correct Correspondence Filing Date for "Date-In" Incorrectly entered or Omitted on Express Mail Label (37 CFR 1.10(d)), filed June 9, 2005, requesting the application be accorded a filing date of March 3, 2005, instead of the presently accorded filing date of March 4, 2005.

The petition is dismissed.

Any further petition to revive the above-identified application must be submitted within TWO (2) MONTHS from the mail date of this decision. Extensions of time under 37 CFR 1.136(a) are permitted. The reconsideration request should include a cover letter entitled "Renewed Petition under 37 CFR 1.137." This is **not** final agency action within the meaning of 5 U.S.C. § 704.

Background

Applicant files the instant petition and asserts that the above-identified application was mailed as Express Mail Label No. EV612559575US on March 3, 2005. In support of this assertion, Applicant files a copy of the New Application Transmittal allegedly enclosed in Express Mail envelope EV612559575US; a copy of the New Application Transmittal allegedly enclosed in Express Mail envelopes EV612559544US and EV612559561US putatively mailed at the same time as Express Mail Label No. EV612559575US; the Declaration of Ms. Kelly J. Hammer ("Hammer Declaration"); a copy of an Express Mail Corporate Account Mailing Statement; a Copy of an Express Mail Customer Copy number EV612559575US; a print-out of a United States Postal Service ("USPS") Track & Confirm for Express Mail Label Number EV612559575US, and a copy of a print-out from the USPS Web Page showing the public retail hours for the post Office at zip code 15290.

Applicant avers that on March 3, 2005, Applicant deposited three applications in Express Mail envelopes EV612559575US, EV612559544US and EV612559561US, to the Post Office located in Akron, OH, but that the Express Mail envelope for Express Mail Label No. EV612559575US was somehow trucked to Pittsburgh, PA, and accepted at the Pittsburgh, PA Post Office at 3:34 a.m. [on March 4, 2004].

A review of the copies of the Express Mail Label for Express Mail Label No. EV612559575US filed with the petition reveal that the "Date-In" indicated thereon is March 4, 2005, at 3:34 a.m. A review of the Express Mail Corporate Account Mailing Statement shows the account date for Express Mail Label No. EV612559575US as March 4, 2005.

STATUTE, REGULATION AND MPEP

Public Law 97-247, 96 Stat. 317 (1982), amended 35 U.S.C. § 21 permitting, but not requiring, the Office to prescribe that any paper or fee required to be filed in the Office be considered filed in the Office on the date on which it was deposited with the U.S. Postal Service. The Office promulgated 37 CFR § 1.10 pursuant to the authority provided in 35 U.S.C. § 21.

37 CFR § 1.8 provides a procedure by which the timely filing of papers and fees deposited with the U.S. Postal Service may be established without independent corroboration by an employee of the U.S. Postal Service (*i.e.*, established solely by the statement(s) from applicant or his or her counsel). The suggestion that 37 CFR § 1.8 be applicable to application papers deposited the U.S. Postal Service for purposes of obtaining a filing date was considered and expressly rejected. The criticality of an application filing date was considered adequate to justify independent verification by an employee of the U.S. Postal Service of the date of deposit of the application papers with the U.S. Postal Service. See rulemaking entitled "Revision of Patent Procedure," published in the *Federal Register* at 48 *Fed. Reg.* 2696, 2702 (January 20, 1983), and in the Patent and Trademark Office *Official Gazette* at 1027 *Off. Gaz. Pat. Office* 9, 25 (February 1, 1983). Put simply, the insertion by a disinterested employee of the U.S. Postal Service of the date of deposit in the U.S. Postal Service by Express

Mail on the Express Mail label of the envelope containing application papers is the *raison d'être* of 37 CFR § 1.10.[1]

Further to this, 37 CFR § 1.8, Certificate of Mailing of Transmission, prohibits an applicant from obtaining a filing date based upon a Certificate of Mailing of Transmission. In particular, 37 CFR § 1.8(a)(2) provides that

> [t]he procedure described in paragraph (a)(1) of this section does not apply to, and no benefit will be given to a Certificate of Mailing or Transmission on, the following:
>
> (i) Relative to Patents and Patent Applications -
>
> (A) The filing of a national patent application specification and drawing or other correspondence for the purposes of obtaining an application filing date, including a request for continued examination under 37 CFR § 1.53(d).

35 U.S.C. § 21(a) states that:

> The Director may by rule prescribe that any paper or fee required to be filed in the Patent and Trademark Office will be considered filed in the Office on the date on which it was deposited with the United States Postal Service or would have been deposited with the United States Postal Service but for postal service interruptions or emergencies designated by the Director

In August, 2005, section 1.10(a) of title 37, Code of Federal Regulations, stated that:

---

[1] In promulgating 37 CFR § 1.10, the Office also considered other types of mail service (*e.g.*, registered mail and certified mail), but chose the "Express Mail" service since this service provides, *inter alia*, a legible mailing date on the "Express Mail" label for the records of both the applicant and the Office. See "Revision of Patent Procedure," 48 *Fed. Reg.* at 2697, 1027 *Off. Gaz. Pat. Office* 12-13.

> Any correspondence received by the Patent and Trademark Office (Office) that was delivered by the "Express Mail Post Office to Addressee" service of the United States Postal Service (USPS) will be considered filed in the Office on the date of deposit with the USPS. The date of deposit with the USPS is shown by the "date-in" on the "Express Mail" mailing label or other official USPS notation. If the USPS deposit date cannot be determined, the correspondence will be accorded the Office receipt date as the filing date.

The PTO considers the date the paper or fee is shown to have been deposited as Express Mail as set forth in § 1.10(a) to be the "Date-In" on the Express Mail label.

Placing the "Date-In" on the Express Mail label by the postal clerk establishes that the package was actually received by the Postal Service. That is the date that verifies that the package was actually mailed.

Where there is a question regarding mailing, the person mailing the paper or fee must establish the actual date of mailing by: (1) a copy of the Express Mail receipt showing the actual date of mailing, (2) a statement from the person who mailed the paper or fee averring to the fact that the mailing occurred on the date certified. See "Revision of Patent Procedure," 48 *Fed. Reg.* at 2697, 1027 *Off. Gaz. Pat. Office* at 12. As there is a discrepancy between the date of mailing (the "Date-In") on the Express Mail label, and the date Petitioner asserts that the above-identified application was mailed, the Office is properly requiring adequate corroboration that the above-identified application was deposited in Express Mail on the date asserted.[2]

---

[2] In response to objections to the use of affidavits and/or declarations to establish a filing date, the Office indicated that such affidavits or declarations are considered to explain activities that are supported by exhibits (*i.e.*, corroborate evidence). See "Revision of Patent Procedure," 48 *Fed. Reg.* at 2702-03, 1027 *Off. Gaz. Pat. Office* at 27-28. Thus, the Office appropriately requires the submission of corroborative documentary evidence to establish an application filing date.

Petitioner does not indicate that: (1) any error on the part of any Postal employee caused or contributed to an incorrect date being written as the "Date-In" on Express Mail label number EV612559575US, or (2) the March 4, 2005 date written as the "Date-In" on Express Mail label number EV612559575US is incorrect. Instead, Applicant asserts that the USPS Employee did not properly accept Express Mail label number EV612559575US, that Express Mail label number EV612559575US somehow became stuck to another envelop. Petitioner provides no corroborating evidence of this assertion, but instead provides evidence that Express Mail label number EV612559575US was deposited at a post Office in Pittsburgh, PA on March 4, 2005. As such, petitioners' assertion, that the above-identified application was deposited by Express Mail on March 3, 2005, is not corroborated by any evidence outside the office of submitting counsel. See Honigsbaum v. Lehman, 903 F.Supp. 8, 10 (D.D.C. 1995).

The petition is filed under 37 CFR § 1.10(d), which provides a method whereby an applicant may petition the Commissioner to accord the correspondence a filing date as of the date the correspondence is shown to have been deposited with the USPS provided that:

> (1) The petition is filed promptly after the person becomes aware that the Office has accorded, or will accord, a filing date based upon an incorrect entry by the USPS;
>
> (2) The number of the "Express Mail" mailing label was placed on the paper(s) or fee(s) that constitute the correspondence prior to the original mailing by "Express Mail;" and
>
> (3) The petition includes a showing which establishes, to the satisfaction of the Commissioner, that the requested filing date was the date the correspondence was deposited in the "Express Mail Post Office to Addressee" service prior to the last scheduled pickup for that day. Any showing pursuant to this paragraph must be corroborated by evidence from the USPS or that came into being after deposit within one business day of the deposit of the

> correspondence in the "Express Mail Post Office to Addressee" service of the USPS.

Acceptable proof would consist of an Express Mail log book, containing an entry made after deposit, by the person who deposited the correspondence as "Express Mail", and made within one business day of such deposit, setting forth, for example, the application attorney docket number or other file identification number, the "Express Mail" number, and the date, place and/or time of deposit, the last scheduled pick-up, the depositor's initials, and the date and time of entry into the log. See MPEP § 513.

OPINION

The evidence presented in the instant petition has been carefully considered; however, it is not persuasive that the above-March 3, 2005.

Petitioner has failed to present corroborating evidence from the USPS or that came into being after deposit within one business day of the deposit of the correspondence in the "Express Mail Post Office to Addressee" service of the USPS, that the application was deposited March 3, 2005. Instead, Applicant seeks to rely upon an assertion that the post Office branch that the application papers were putatively deposited was closed to the public at 3:34 a.m. on March 3, 2005, to support an assertion that the application papers became stuck to another envelop and trucked to Pittsburgh, PA. This assertion fails to satisfy 37 CFR 1.10(d). It is well established that failure to comply with the requirements of 37 CFR 1.10 is an "avoidable" oversight that could have been prevented by the exercise of ordinary care or diligence.

Section 513 of the MPEP provides that

> [s]ince the filing of correspondence under 37 CFR 1.10 without the number of the "Express Mail" mailing label thereon is an oversight that can be avoided by the exercise of reasonable care, requests for waiver of this requirement will not be granted on petition. A party's inadvertent failure to comply with the requirements of a rule is not deemed to be an extraordinary situation that would warrant waiver of a

rule under 37 CFR 1.183, 2.146(a)(5) or 2.148, nor is such an inadvertent omission considered "unavoidable," within the meaning of 15 U.S.C. 1062(b), 35 U.S.C. 133, 37 CFR 1.137(a) or 37 CFR 2.66(a). See, *Honigsbaum v. Lehman*, 903 F. Supp. 8, 37 USPQ2d 1799 Rev. 2, May 2004 500-56 513 RECEIPT AND HANDLING OF MAIL AND PAPERS (D.D.C. 1995) (Commissioner did not abuse his discretion in refusing to waive requirements of 37 CFR 1.10(c) in order to grant filing date to patent application, where applicant failed to produce "Express Mail" customer receipt or any other evidence that application was actually deposited with USPS as "Express Mail."), *aff 'd without opinion*, 95 F.3d 1166 (Fed. Cir. 1996); *Nitto Chemical Industry. Co., Ltd. v. Comer*, 39 USPQ2d 1778, 1782 (D.D.C. 1994) (Commissioner's refusal to waive requirements of 37 CFR 1.10 in order to grant priority filing date to patent application not arbitrary and capricious, because failure to comply with the requirements of 37 CFR 1.10 is an "avoidable" oversight that could have been prevented by the exercise of ordinary care or diligence, and thus not an extraordinary situation under 37 CFR 1.183.); *Vincent v. Mossinghoff*, 230 USPQ 621 (D.D.C. 1985) (misunderstanding of 37 CFR 1.8 not unavoidable delay in responding to Office Action); *Gustafson v. Strange*, 227 USPQ 174 (Comm'r Pat. 1985) (counsel's unawareness of 37 CFR 1.8 not extraordinary situation warranting waiver of a rule); *In re Chicago Historical Antique Automobile Museum, Inc.*, 197 USPQ 289 (Comm'r Pat. 1978) (since certificate of mailing procedure under 37 CFR 1.8 was available to petitioner, lateness due to mail delay not deemed to be extraordinary situation). (Emphasis supplied).

CONCLUSION

For the above stated reasons, the request that the above-identified application be accorded a filing date of March 3, 2005 is dismissed, and the filing date remains March 4, 2005.

Further correspondence with respect to this matter should be addressed as follows:

By mail: Mail Stop PETITIONS
Commissioner for Patents

PO Box 1450
Alexandria, VA 22313-1450

By FAX: (571) 273-8300
Attn: Office of Petitions

By hand: Customer Service Window
Randolph Building
401 Dulany Street
Alexandria, VA 22314

Telephone inquiries concerning this matter should be directed to the undersigned at (571) 272-3232.

Derek L. Woods
Petitions Attorney
Office of Petitions

UNITED STATES PATENT AND TRADEMARK OFFICE

COMMISSIONER FOR PATENTS
UNITED STATES PATENT AND TRADEMARK OFFICE
P.O. BOX 1450
ALEXANDRIA, VA 22313-1450
www.uspto.gov

HAHN LOESER & PARKS LLP
ONE GOJO PLAZA
SUITE 300
AKRON, OH 44311-1076

COPY MAILED
NOV 25 2005
OFFICE OF PETITIONS

In re Application of :
Klaus Töpfer :
Application No. 11/074,324 :
Filed: March 4, 2005 : ON PETITION
For: CLIP BUFFER :

This is a decision in response to the Renewed Petition Under 37 CFR 1.10(d) to Change the Filing Date Due to Incorrectly Entered Date-In by the USPS, filed November 14, 2005, requesting the application be accorded a filing date of March 3, 2005, instead of the presently accorded filing date of March 4, 2005.

The petition is dismissed.

Any further petition to revive the above-identified application must be submitted within TWO (2) MONTHS from the mail date of this decision. Extensions of time under 37 CFR 1.136(a) are permitted. The reconsideration request should include a cover letter entitled "Renewed Petition under 37 CFR 1.137." This is **not** final agency action within the meaning of 5 U.S.C. § 704.

Background

Applicant filed a petition on June 9, 2005 wherein Applicant asserted that the above-identified application was mailed as Express Mail Label No. EV612559575US on March 3, 2005. In support of this assertion, Applicant filed a copy of the New Application Transmittal allegedly enclosed in Express Mail envelope EV612559575US; a copy of the New Application Transmittal allegedly enclosed in Express Mail envelopes EV612559544US and EV612559561US, putatively mailed at the same time as Express Mail Label No. EV612559575US; the Declaration of Ms. Kelly J. Hammer ("Hammer Declaration"); a copy of an Express Mail Corporate Account Mailing Statement; a Copy of an Express Mail Customer Copy number EV612559575US; a print-out of a United States Postal Service ("USPS") Track & Confirm for Express Mail Label Number EV612559575US, and a copy of a print-out from the USPS Web Page showing the public retail hours for the post Office at zip code 15290.

Applicant averred that on March 3, 2005, Applicant deposited three applications in Express Mail envelopes EV612559575US, EV612559544US and EV612559561US, to the Post Office located in Akron, OH, but that the Express Mail envelope for Express Mail Label No. EV612559575US was somehow trucked to Pittsburgh, PA, and accepted at the Pittsburgh, PA Post Office at 3:34 a.m. [on March 4, 2004].

A review of the copies of the Express Mail Label for Express Mail Label No. EV612559575US filed with the June 9, 2005 petition revealed that the "Date-In" indicated thereon is March 4, 2005, at 3:34 a.m. A review of the Express Mail Corporate Account Mailing Statement showed the account date for Express Mail Label No. EV612559575US as March 4, 2005. As such, the documents submitted to support the assertion that the application was deposited Express Mail Post Office to Addressee on March 3, 2004, demonstrated that the application was deposited on March 4, 2004.

The June 9, 2005 petition was dismissed in s Decision mailed September 14, 2005. In the Decision dismissing the petition, applicant was advised of the history of 37 CFR 1.10. Applicant was informed that

> the criticality of an application filing date was considered adequate to justify independent verification by an employee of the U.S. Postal Service of the date of deposit of the application papers with the U.S. Postal Service. See rulemaking entitled "Revision of Patent Procedure," published in the *Federal Register* at 48 *Fed. Reg.* 2696, 2702 (January 20, 1983), and in the Patent and Trademark Office *Official Gazette* at 1027 *Off. Gaz. Pat. Office* 9, 25 (February 1, 1983). Put simply, the insertion by a disinterested employee of the U.S. Postal Service of the date of deposit in the U.S. Postal Service by Express Mail on the Express Mail label of the envelope containing application papers is the *raison d'être* of 37 CFR § 1.10.[1]

---

[1] In promulgating 37 CFR § 1.10, the Office also considered other types of mail service (*e.g.*, registered mail and certified mail), but chose the "Express Mail" service since this service provides, *inter alia*, a legible mailing date on the "Express Mail" label for the records of both the applicant and the Office. See "Revision of Patent Procedure," 48 *Fed. Reg.* at 2697, 1027 *Off. Gaz. Pat. Office* 12-13.

Applicant was further advised that

> as there is a discrepancy between the date of mailing (the "Date-In") on the Express Mail label, and the date Petitioner asserts that the above-identified application was mailed, the Office is properly requiring adequate corroboration that the above-identified application was deposited in Express Mail on the date asserted.[2]

Worth noting here, and as included in a footnote in the Decision dismissing the June 9, 2005 petition, is the importance of exhibits, i.e. corroborative evidence, in establishing an application filing date. Affidavits or declarations are considered to explain activities that are supported by exhibits/corroborative evidence from the USPS.

In the June 9, 2005 petition, Applicant asserted that the USPS Employee did not properly accept Express Mail label number EV612559575US, that Express Mail label number EV612559575US somehow became stuck to another envelop. However, Applicant provided no corroborating evidence of this assertion, but instead provided evidence that Express Mail label number EV612559575US was deposited at a post Office in Pittsburgh, PA on March 4, 2005. As such, Applicant' assertion, that the above-identified application was deposited by Express Mail on March 3, 2005, was not corroborated by any evidence outside the office of submitting counsel. See Honigsbaum v. Lehman, 903 F.Supp. 8, 10 (D.D.C. 1995).

The petition was properly treated under 37 CFR § 1.10(d), which provides a method whereby an applicant may petition the Commissioner to accord the correspondence a filing date as of the date the correspondence is shown to have been deposited with the USPS provided that:

---

[2] In response to objections to the use of affidavits and/or declarations to establish a filing date, the Office indicated that such affidavits or declarations are considered to explain activities that are supported by exhibits (*i.e.*, corroborate evidence). See "Revision of Patent Procedure," 48 *Fed. Reg.* at 2702-03, 1027 *Off. Gaz. Pat. Office* at 27-28. Thus, the Office appropriately requires the submission of corroborative documentary evidence to establish an application filing date.

> (1) The petition is filed promptly after the person becomes aware that the Office has accorded, or will accord, a filing date based upon an incorrect entry by the USPS;
>
> (2) The number of the "Express Mail" mailing label was placed on the paper(s) or fee(s) that constitute the correspondence prior to the original mailing by "Express Mail;" and
>
> (3) The petition includes a showing which establishes, to the satisfaction of the Commissioner, that the requested filing date was the date the correspondence was deposited in the "Express Mail Post Office to Addressee" service prior to the last scheduled pickup for that day. Any showing pursuant to this paragraph must be corroborated by evidence from the USPS or that came into being after deposit within one business day of the deposit of the correspondence in the "Express Mail Post Office to Addressee" service of the USPS.

Applicant was advised that

> acceptable proof would consist of an Express Mail log book, containing an entry made after deposit, by the person who deposited the correspondence as "Express Mail", and made within one business day of such deposit, setting forth, for example, the application attorney docket number or other file identification number, the "Express Mail" number, and the date, place and/or time of deposit, the last scheduled pick-up, the depositor's initials, and the date and time of entry into the log.

See MPEP § 513.

The Decision dismissing the petition concluded that Applicant had failed to present corroborating evidence from the USPS or that came into being after deposit within one business day of the deposit of the correspondence in the "Express Mail Post Office to Addressee" service of the USPS, that the application was deposited March 3, 2005. Instead, Applicant sought to rely upon an assertion that the post Office branch that the

application papers were putatively deposited was closed to the public at 3:34 a.m. on March 3, 2005, to support an assertion that the application papers became stuck to another envelop and trucked to Pittsburgh, PA. Applicant was advised that this assertion failed to satisfy 37 CFR 1.10(d). Applicant was informed that "it is well established that failure to comply with the requirements of 37 CFR 1.10 is an 'avoidable' oversight that could have been prevented by the exercise of ordinary care or diligence." Decision dismissing petition at p.6.

Further to this, the Decision dismissing the petition cited to Section 513 of the MPEP, which provides that

> [s]ince the filing of correspondence under 37 CFR 1.10 without the number of the "Express Mail" mailing label thereon is an oversight that can be avoided by the exercise of reasonable care, requests for waiver of this requirement will not be granted on petition. A party's inadvertent failure to comply with the requirements of a rule is not deemed to be an extraordinary situation that would warrant waiver of a rule under 37 CFR 1.183, 2.146(a)(5) or 2.148, nor is such an inadvertent omission considered "unavoidable," within the meaning of 15 U.S.C. 1062(b), 35 U.S.C. 133, 37 CFR 1.137(a) or 37 CFR 2.66(a). See, *Honigsbaum v. Lehman*, 903 F. Supp. 8, 37 USPQ2d 1799 Rev. 2, May 2004 500-56 513 RECEIPT AND HANDLING OF MAIL AND PAPERS (D.D.C. 1995) (Commissioner did not abuse his discretion in refusing to waive requirements of 37 CFR 1.10(c) in order to grant filing date to patent application, where applicant failed to produce "Express Mail" customer receipt or any other evidence that application was actually deposited with USPS as "Express Mail."), *aff 'd without opinion*, 95 F.3d 1166 (Fed. Cir. 1996); *Nitto Chemical Industry. Co., Ltd. v. Comer*, 39 USPQ2d 1778, 1782 (D.D.C. 1994) (Commissioner's refusal to waive requirements of 37 CFR 1.10 in order to grant priority filing date to patent application not arbitrary and capricious, because failure to comply with the requirements of 37 CFR 1.10 is an "avoidable" oversight that could have been prevented by the exercise of ordinary care or diligence, and thus not an extraordinary situation under 37 CFR 1.183.); *Vincent v. Mossinghoff*, 230 USPQ 621 (D.D.C. 1985) (misunderstanding of 37 CFR 1.8 not

> unavoidable delay in responding to Office Action); *Gustafson v. Strange*, 227 USPQ 174 (Comm'r Pat. 1985) (counsel's unawareness of 37 CFR 1.8 not extraordinary situation warranting waiver of a rule); *In re Chicago Historical Antique Automobile Museum, Inc.*, 197 USPQ 289 (Comm'r Pat. 1978) (since certificate of mailing procedure under 37 CFR 1.8 was available to petitioner, lateness due to mail delay not deemed to be extraordinary situation). (Emphasis supplied).

For the above stated reasons, the request that the above-identified application be accorded a filing date of March 3, 2005 was dismissed.

The instant Request for Reconsideration

Applicant files the instant Request for Reconsideration asserting that the above-identified application was mailed as Express Mail Label No. EV612559575US on March 3, 2005. In support of this renewed assertion, Applicant again files a copy of the New Application Transmittal allegedly enclosed in Express Mail envelope EV612559575US; a copy of the New Application Transmittal allegedly enclosed in Express Mail envelopes EV612559544US and EV612559561US, putatively mailed at the same time as Express Mail Label No. EV612559575US; a copy of the Declaration of Ms. Kelly J. Hammer ("Hammer Declaration"); a copy of an Express Mail Corporate Account Mailing Statement, and a second, enlarged copy; a Copy of an Express Mail Customer Copy number EV612559575US; a copy of a print-out of a United States Postal Service ("USPS") Track & Confirm for Express Mail Label Number EV612559575US, and a copy of a print-out from the USPS Web Page showing the public retail hours for the post Office at zip code 15290.

Additionally, Applicant files a Letter in Support of Petition by Hahn Loeser & Parks from the USPS, signed by Ann Cooper, Expedited Service Specialist, Akron, OH. Of note is that the letter is by Hahn Loeser & Parks, attorneys of record in this application, and not from the USPS.

Applicant provides that Ms. Hammer handed all three Express Mail Envelopes to a USPS employee at the retail counter. Applicant asserts that the USPS employee did not properly record the date and time of receipt of the Express Mail envelope for the above-identified application. *Request for Reconsideration* at p.3.

Applicant further asseverates that the USPS employee did not notice that the envelope was not accepted properly, despite its acceptance by the USPS.

Applicant next provides that it is not clear why the date and time was not entered on the Express Mail envelope. Applicant provides that the post office at zip code 15290 and confirmed by telephone are provided in the USPS "Locator" Web Page, filed in support of the petition, and that the post office at zip code 15290 has no retail counter open at 3:34 am (the time entered on Express Mail label EV612559575US).

Applicant concludes that the USPS employee made a substantial error and wrote in the wrong date and time on the label.

Applicable Law, Rules and MPEP

37 CFR § 1.10(d) provides a method whereby an applicant may petition the Commissioner to accord the correspondence a filing date as of the date the correspondence is shown to have been deposited with the USPS provided that:

> (1) The petition is filed promptly after the person becomes aware that the Office has accorded, or will accord, a filing date based upon an incorrect entry by the USPS;
>
> (2) The number of the "Express Mail" mailing label was placed on the paper(s) or fee(s) that constitute the correspondence prior to the original mailing by "Express Mail;" and
>
> (3) The petition includes a showing which establishes, to the satisfaction of the Commissioner, that the requested filing date was the date the correspondence was deposited in the "Express Mail Post Office to Addressee" service prior to the last scheduled pickup for that day. Any showing pursuant to this paragraph must be corroborated by evidence from the USPS or that came into being after deposit within one business day of the deposit of the correspondence in the "Express Mail Post Office to Addressee" service of the USPS.

Analysis

Applicant has again failed to provide any corroborative evidence from the USPS or that came into being after deposit within one business day of the deposit of the correspondence in the "Express Mail Post Office to Addressee" service of the USPS. Applicant's additional evidence comprises a letter from Applicant. As such, Applicant has failed to satisfy the requirements of 37 CFR 1.10(d).

While Applicant avers that the USPS employee did not properly record the date and time of receipt of the Express Mail envelope for the above-identified application; did not notice that the envelope was not accepted properly, despite its acceptance by the USPS, and that it is not clear why the date and time was not entered on the Express Mail envelope, Applicant has not provided any evidence from the USPS to support these assertions.

The rules in this regard are clear: Any showing pursuant to this paragraph must be corroborated by evidence from the USPS or that came into being after deposit within one business day of the deposit of the correspondence in the "Express Mail Post Office to Addressee" service of the USPS. 37 CFR 1.10(d).

Applicant's evidence from the USPS consists of a copy of a copy of an Express Mail Corporate Account Mailing Statement, and a second, enlarged copy; a Copy of an Express Mail Customer Copy number EV612559575US; a copy of a print-out of a United States Postal Service ("USPS") Track & Confirm for Express Mail Label Number EV612559575US, and a copy of a print-out from the USPS Web Page showing the public retail hours for the post Office at zip code 15290.

The copy of the Express Mail Corporate Account Mailing Statement; the copy of the Express Mail Customer Copy number EV612559575US, and the copy of a print-out of a United States Postal Service ("USPS") Track & Confirm for Express Mail Label Number EV612559575US all support that the application was deposited on March 4, 2005. The copy of a print-out from the USPS Web Page showing the public retail hours for the post Office at zip code 15290 only demonstrates the public retail hours for the Post Office at 1001 California Ave in Pittsburgh, PA 15290-9998.

Conclusion

Here, Applicant seeks to place the burden for error on the USPS. As such, Applicant should provide a letter from the USPS - the manager of the branch where the putative error occurred - attesting to the error on the part of the USPS.

Further correspondence with respect to this matter should be addressed as follows:

By mail: Mail Stop PETITIONS
Commissioner for Patents
PO Box 1450
Alexandria, VA 22313-1450

By FAX: (571) 273-8300
Attn: Office of Petitions

By hand: Customer Service Window
Randolph Building
401 Dulany Street
Alexandria, VA 22314

Telephone inquiries concerning this matter should be directed to the undersigned at (571) 272-3232.

Derek L. Woods
Attorney
Office of Petitions

UNITED STATES PATENT AND TRADEMARK OFFICE

COMMISSIONER FOR PATENTS
UNITED STATES PATENT AND TRADEMARK OFFICE
P.O. BOX 1450
ALEXANDRIA, VA 22313-1450
www.uspto.gov

HAHN LOESER & PARKS LLP
ONE GOJO PLAZA
SUITE 300
AKRON, OH 44311-1076

COPY MAILED
FEB 1 3 2006
OFFICE OF PETITIONS

In re Application of	:	
Klaus Töpfer	:	
Application No. 11/074,324	:	
Filed: March 3, 2005	:	ON PETITION
For: CLIP BUFFER	:	

This is a decision in response to the Second Renewed Petition Under 37 CFR 1.10(d) to Change the Filing Date Due to Incorrectly Entered Date-In by the USPS, filed December 21, 2005, requesting the application be accorded a filing date of March 3, 2005, instead of the presently accorded filing date of March 4, 2005.

Petitioner alleges that the application was deposited in Express Mail service on March 3, 2005. Petitioner has filed the appropriate documentary and corroborating evidence demonstrating that March 3, 2005 was the date the correspondence was deposited Express Mail Post Office to Addressee.

In view of the above, the petition is **granted**. No fee is necessary.

This application file will be forwarded to the Office of Initial Patent Examination for correction of the filing date to March 3, 2005.

Telephone inquiries concerning this matter should be directed to the undersigned at (571) 272-3232.

Derek L. Woods
Attorney
Office of Petitions

UNITED STATES PATENT AND TRADEMARK OFFICE

Commissioner for Patents
United States Patent and Trademark Office
P.O. Box 1450
Alexandria, VA 22313-1450
www.uspto.gov

COPY MAILED

DEC 19 2005

OFFICE OF PETITIONS

Michael S. SHERRILL
4756 Banning Avenue, Suite 212
White Bear lake, MN 55110

In re Application of:
ZIEBARTH, Wayne, William
Application No.: 11/074,344
Filing Date: March 07, 2005
Attorney's Docket No.: WEB002USPTO1
For: SOFTWARE PROXY FOR SECURING WEB APPLICATION BUSINESS LOGIC

DECISION ON PETITION FOR REVIVAL OF ABANDONED APPLICATION UNDER 37 CFR 1.137(b)

This is a decision on the petition under 37 CFR 1.137(b), filed October 14, 2005 to revive the above-entitled application.

The petition is **DISMISSED** as moot.

On March 28, 2005, a Notice To File Missing Parts Of Non-Provisional Application was mailed herein requiring payment of the search fee. The Notice set a period for reply of two (2) months, with extensions of time available under 37 CFR 1.136(a).

On October 14, 2005, applicant filed the present petition for revival under 37 CFR 1.137(b). The petition included an assertion of small entity status, and it was accompanied by payment of the small entity search fee and the small entity petition fee. The Fee Transmittal sheet included with the petition also authorized a charge to Deposit Account No. 19-2020 for any additional fees required.

The available five-month extension of time under 37 CFR 1.136(a) would make the October 14, 2005 submission a timely response to the Notice mailed March 28, 2005. Accordingly, based on the authorization contained in the Fee Transmittal sheet, Deposit Account No 19-2020 will be charged the $1,080 small entity fee required for such an extension. Taking into account this extension of time, the response to the Notice To File Missing Parts included with the October 14, 2005 submission is considered timely filed.

Based on the above, the present application did not become abandoned for failure to file a timely response to the Notice To File Missing Parts Of Non-Provisional Application mailed March 28, 2005. Applicant's petition for revival under 37 CFR 1.137(b) is therefore moot.

The $750 petition fee submitted with the petition for revival will be refunded to Deposit Account No. 19-2020.

The application file is being referred to the Office Of Initial Patent Examination.

Telephone inquiries concerning this decision should be directed to Richard M. Ross at (571) 272-3296 or, in his absence, the undersigned at (571) 272-3217.

Frances Hicks for
Brian Hearn
Petitions Examiner
Office Of Petitions

UNITED STATES PATENT AND TRADEMARK OFFICE

Commissioner for Patents
United States Patent and Trademark Office
P.O. Box 1450
Alexandria, VA 22313-1450
www.uspto.gov

Townsend and Townsend and Crew, LLP
Two Embarcadero Center
Eighth Floor
San Francisco, CA 94111-3834

COPY MAILED

JUN 0 5 2009

OFFICE OF PETITIONS

In re Application of	:	
William C. Nowlin et al.	:	
Application No. 11/074,372	:	DECISION ON PETITION
Filed: March 7, 2005	:	TO WITHDRAW
Attorney Docket No. 017516-001830US	:	FROM RECORD
	:	

This is a decision on the Request to Withdraw as attorney or agent of record under 37 C.F.R. § 1.36(b), filed April 4, 2005.

The request is **moot because a revocation of power of attorney has been filed**.

A review of the file record indicates that the power of attorney to Mark D. Barrish and all attorneys/agents of record has been revoked by the assignee of the patent application on September 23, 2005. Accordingly, the request to withdraw under 37 C.F.R. § 1.36(b) is moot.

All future communications from the Office will continue to be directed to the below-listed address until otherwise notified by applicant.

Telephone inquires concerning this decision should be directed to Kimberly Inabinet at 571-272-4618.

Kimberly Inabinet
Petitions Examiner
Office of Petitions

cc: PATENT DEPT
INTUITIVE SURGICAL, INC
1266 KIFER RD
BUILDING 101
SUNNYVALE CA 94086

UNITED STATES PATENT AND TRADEMARK OFFICE

Commissioner for Patents
United States Patent and Trademark Office
P.O. Box 1450
Alexandria, VA 22313-1450
www.uspto.gov

FOLEY HOAG, LLP
PATENT GROUP (W/HUV HMV)
155 SEAPORT BLVD.
BOSTON MA 02210-2600

COPY MAILED

JUN 30 2008

OFFICE OF PETITIONS

In re Application of	:	
SINCLAIR, et al.	:	
Application No. 11/074,374	:	DECISION ON PETITION
Filed: March 7, 2005	:	TO WITHDRAW
Attorney Docket No. **HMV-089.03**	:	FROM RECORD
	:	

This is a decision on the Request to Withdraw as attorney or agent of record under 37 C.F.R. § 1.36(b), filed April 29, 2008.

The request is **APPROVED.**

A grantable request to withdraw as attorney/agent of record must be signed by every attorney/agent seeking to withdraw or contain a clear indication that one attorney is signing on behalf of another/others. A request to withdraw will not be approved unless at least 30 (thirty) days would remain between the date of approval and the later of the expiration date of a time to file a response or the expiration date of the maximum time period which can be extended under 37 C.F.R. § 1.136(a).

The request was signed by Gregory J. Sieczkiewicz on behalf of all attorneys of record. All attorneys/agents associated have been withdrawn. Applicant is reminded that there is no attorney of record at this time.

The request to change the correspondence of record is not acceptable as the requested correspondence address as it is not that of: (1) the first named signing inventor; or (2) an intervening assignee of the entire interest under 37 C.F.R 3.71. All future communications from the Office will be directed to the first named signing inventor at the first copied address below until otherwise properly notified by the applicant.

There is an outstanding Office action mailed March 21, 2008 that requires a reply from the applicant.

Telephone inquiries concerning this decision should be directed to the undersigned at (571) 272-7253.

Monica A. Graves
Petitions Examiner
Office of Petitions

cc: **DAVID A SINCLAIR**
8 PRESTON ROAD
WEST ROXBURY, MA 02132

cc: **JOHN R. VAN AMSTERDAM**
WOLF GREENFIELD & SACKS, PC
600 ATLANTIC AVEUE
BOSTON, MA 02210

UNITED STATES PATENT AND TRADEMARK OFFICE

Commissioner for Patents
United States Patent and Trademark Office
P.O. Box 1450
Alexandria, VA 22313-1450
www.uspto.gov

DAVID PRASHKER
DAVID PRASHKER, P.C.
P.O. BOX 5387
MAGNOLIA MA 01930

COPY MAILED

OCT 3 0 2009

OFFICE OF PETITIONS

In re Application of	:	
Douglas R. Smego	:	
Application No. 11/074,384	:	DECISION ON PETITION
Filed: March 7, 2005	:	
Attorney Docket No. SMEG-001	:	

This is a decision on the petition under the unintentional provisions of 37 CFR 1.137(b), filed April 28, 2009, to revive the above-identified application.

The petition is **GRANTED**.

The application became abandoned for failure to reply in a timely manner to the non-final Office action mailed May 9, 2008, which set a shortened statutory period for reply of three (3) months. No extensions of time under the provisions of 37 CFR 1.136(a) were obtained. Accordingly, the application became abandoned on August 10, 2008. A Notice of Abandonment was mailed February 2, 2009.

The petition satisfies the requirements of 37 CFR 1.137(b) in that petitioner has supplied (1) the reply in the form of an Amendment, (2) the petition fee of $810.00, and (3) an adequate statement of unintentional delay.

Telephone inquiries concerning this decision should be directed to the undersigned at (571) 272-7751.

This matter is being referred to Technology Center AU 3761 for appropriate action by the Examiner in the normal course of business on the reply received.

Joan Olszewski

Joan Olszewski
Petitions Examiner
Office of Petitions

UNITED STATES PATENT AND TRADEMARK OFFICE

Commissioner for Patents
United States Patent and Trademark Office
P.O. Box 1450
Alexandria, VA 22313-1450
www.uspto.gov

NOVARTIS
CORPORATE INTELLECTUAL PROPERTY
ONE HEALTH PLAZA 104/3
EAST HANOVER NJ 07936-1080

MAILED

MAY 19 2010

OFFICE OF PETITIONS

In re Patent No. 7,622,483	: DECISION ON REQUEST
Cuenoud, et al.	: FOR
Issue Date: November 24, 2009	: RECONSIDERATION OF
Application No. 11/074,400	: PATENT TERM ADJUSTMENT
Filed: March 7, 2005	: and
Atty Docket No. PR/4-30970B	: NOTICE OF INTENT TO ISSUE
	: CERTIFICATE OF CORRECTION

This is a decision on the petition filed on January 13, 2010, which is being treated as a petition under 37 CFR 1.705(d) requesting that the patent term adjustment indicated on the above-identified patent be corrected to indicate that the term of the above-identified patent is extended or adjusted by one thousand, two hundred and thirty-seven (1,237) days.

The petition to correct the patent term adjustment indicated on the above-identified patent to indicate that the term of the above-identified patent is extended or adjusted by one thousand, two hundred and thirty-seven (1,237) days is **GRANTED**.

The Office acknowledges receipt of the fee set forth in 37 CFR 1.18(e). No additional fees are required.

The application is being forwarded to the Certificates of Corrections Branch for issuance of a certificate of correction. The Office will issue a certificate of correction indicating that the term of the above-identified patent is extended or adjusted by **one thousand, two hundred and thirty-seven (1,237) days.**

Telephone inquiries specific to this matter should be directed to the undersigned, at (571) 272-3222.

Kenya A. McLaughlin
Petitions Attorney
Office of Petitions

Enclosure: Copy of DRAFT Certificate of Correction

DRAFT COPY

UNITED STATES PATENT AND TRADEMARK OFFICE

CERTIFICATE OF CORRECTION

PATENT : 7,622,483 B2

DATED : Nov. 24, 2009

INVENTOR(S) : Cuenoud et al.

It is certified that error appears in the above-identified patent and that said Letters Patent is hereby corrected as shown below:

On the cover page,

[*] Notice: Subject to any disclaimer, the term of this patent is extended or adjusted under 35 USC 154(b) by (739) days

Delete the phrase "by 739 days" and insert – by 1237 days--

UNITED STATES PATENT AND TRADEMARK OFFICE

Commissioner for Patents
United States Patent and Trademark Office
P.O. Box 1450
Alexandria, VA 22313-1450
www.uspto.gov

EPSTEIN DRANGEL BAZERMAN & JAMES, LLP
60 EAST 42ND STREET
SUITE 820
NEW YORK NY 10165

MAILED

JUN 30 2010

OFFICE OF PETITIONS

In re Application of	:	
Kalanovic et al.	:	
Application No. 11/074,404	:	DECISION ON PETITION
Filed: March 8, 2005	:	
Attorney Docket No. 1993-100US	:	

This is a decision on the petition under the unintentional provisions of 37 CFR 1.137(b), filed May 27, 2010, to revive the above-identified application.

The petition is **GRANTED**.

The application became abandoned for failure to reply in a timely manner to the Restriction Requirement mailed March 24, 2008, which set a shortened statutory period for reply of one (1) month or thirty (30) days (whichever is later). No extensions of time under the provisions of 37 CFR 1.136(a) were obtained. Accordingly, the application became abandoned on April 25, 2008. A Notice of Abandonment was mailed November 25, 2008.

The petition satisfies the requirements of 37 CFR 1.137(b) in that petitioner has supplied (1) the reply in the form of a response to the Restriction Requirement, (2) the petition fee of $810.00 and (3) a proper statement of unintentional delay.

Telephone inquiries concerning this decision should be directed to the undersigned at (571)272-7751.

This application is being referred to Technology Center AU 3761 for appropriate action by the Examiner in the normal course of business on the reply received.

Joan Olszewski

Joan Olszewski
Petitions Examiner
Office of Petitions

SPE RESPONSE FOR CERTIFICATE OF CORRECTION

Paper No.: X

DATE : July 24, 2008

TO SPE OF : ART UNIT 2835

SUBJECT : Request for Certificate of Correction for Appl. No.: 11/074411 Patent No.: 7355859 B2

A response is requested with respect to a request for a certificate of correction.

With respect to the change(s) requested to correct Office and/or Applicant's errors, should the patent read as shown in the certificate of correction attached herewith or the COCIN document(s), in IFW images for the above-identified patented application? No new matter should be introduced, nor should the scope or meaning of the claims be changed.

If the response is for an IFW, within 7 days, please complete and forward the response, to the employee (named below) via scanning into application images, using document code **COCX**.

DO NOT SENT TO ATTORNEY

If the response is for a paper file wrapper, please complete the response and forward the response with the paper file wrapper, to the employee (named below), within **7** days, to:

Certificates of Correction Branch (CofC)
South Tower - 9A22
Palm Location 7580

You can fax the Directors/SPE response to 571-270-9990

LAMONTE NEWSOME
Certificates of Correction Branch
703-308-9390 ext. 112

Thank You For Your Assistance

The request for issuing the above-identified correction(s) is hereby:
Note your decision on the appropriate box.

☒ **Approved**	**All** changes apply.
☐ **Approved in Part**	Specify below which changes **do not** apply.
☐ **Denied**	State the reasons for denial below.

Comments: 7/24/08

JAYPRAKASH GANDHI
SUPERVISORY PATENT EXAMINER
SPE

2835
Art Unit

PAGE 2/2 * RCVD AT 7/24/2008 10:16:16 AM [Eastern Daylight Time] * SVR:USPTO-EFXRF-4/0 * DNIS:2709990 * CSID:USPTO * DURATION (mm-ss):00-00

UNITED STATES PATENT AND TRADEMARK OFFICE

Commissioner for Patents
United States Patent and Trademark Office
P.O. Box 1450
Alexandria, VA 22313-1450
www.uspto.gov

Paper No.

SAILE ACKERMAN LLC
28 DAVIS AVENUE
POUGHKEEPSIE NY 12603

COPY MAILED
NOV 07 2008
OFFICE OF PETITIONS

In re Application of	:	
Ong et al.	:	DECISION ON
Application No. 11/074,417	:	PETITION
Filed: March 8, 2005	:	
Atty Docket No. NUS05-001	:	

This is a decision on the PETITION FOR REVIVAL OF AN APPLICATION FOR PATENT ABANDONED UNINTENTIONALLY UNDER 37 CFR 1.137(b) filed July 21, 2008.

The petition is **GRANTED**.

The above-identified application became abandoned for failure to pay the Publication Fee within three months of the mailing date, February 22, 2008, of the Notice of Allowance and Fee(s) Due. This Office action set a three-month nonextendable statutory period for reply. The issue fee transmittal was filed and the issue fee was timely paid on April 24, 2008. However, no payment of the publication fee was timely made. Thus, the above-identified application became abandoned. A courtesy Notice of Abandonment was mailed on June 17, 2008.

In response, the instant petition was filed. The petition includes the required reply[1] in the form of payment of the Publication Fee; payment of the petition fee set forth in 37 CFR § 1.17(m); and the required statement of unintentional delay. No terminal disclaimer is required.

It is concluded that all requirements of 37 CFR 1.137(b) have been met.

[1] There was no distinct but concurrent requirement for corrected drawings.

The Office of Data Management (formerly known as the Office of Patent Publication) has been advised of this decision. The application is, thereby, forwarded for processing into a patent.

Telephone inquiries related to this decision should be directed to the undersigned at (571) 272-3219.

Nancy Johnson
Senior Petitions Attorney
Office of Petitions

UNITED STATES PATENT AND TRADEMARK OFFICE

Commissioner for Patents
United States Patent and Trademark Office
P.O. Box 1450
Alexandria, VA 22313-1450
www.uspto.gov

OCT 05 2005

GREENBERG TRAURIG LLP
MET LIFE BUILDING
200 PARK AVENUE; 14TH FLOOR
NEW YORK NY 10166

In re Application	:	
Richard Rosen et al	:	
Serial No.: 11/074,425	:	DECISION ON PETITION
Filed: March 8, 2005	:	
For: Method and Apparatus for Real Time	:	
Predictive Modeling For Chronically	:	
Ill Patients	:	

This is in response to applicants' petition filed June 13, 2005, to make the above-identified application special under the provisions of 37 CFR 1.102(c), based on the age of the applicant.

Applicant has satisfied the provisions set forth in M.P.E.P. 708.02, IV. Therefore the petition is **GRANTED**.

The application will be forwarded to the examiner for action on the merits commensurate with this decision.

Should there be any questions with regard to this letter please contact Frederick Schmidt by letter addressed to the Director, Technology Center 3700, P.O. Box 1450 Alexandria, VA 22313-1450, or by telephone at (571) 272-2975 or by facsimile transmission at (571) 272-8300.

Frederick R. Schmidt

Frederick R. Schmidt, Director
Technology Center 3700

UNITED STATES PATENT AND TRADEMARK OFFICE

UNITED STATES DEPARTMENT OF COMMERCE
United States Patent and Trademark Office
Address: COMMISSIONER FOR PATENTS
P.O. Box 1450
Alexandria, Virginia 22313-1450
www.uspto.gov

FISH & RICHARDSON P.C.
P.O. BOX 1022
MINNEAPOLIS, MN 55440-1022

Mail Date: 04/20/2010

Applicant	: Weiming Tang	: DECISION ON REQUEST FOR
Patent Number	: 7636840	: RECALCULATION of PATENT
Issue Date	: 12/22/2009	: TERM ADJUSTMENT IN VIEW
Appliction No	: 11/074,468	: OF WYETH AND NOTICE OF INTENT TO
Filed	: 03/04/2005	: ISSUE CERTIFICATE OF CORRECTION
		:

The Request for Recalculation is **GRANTED** to the extent indicated.

The patent term adjustment has been determined to be **1087** days. The USPTO will *sua sponte* issue a certificate of correction reflecting the amount of PTA days determined by the recalculation.

Prior to the issuance of the certificate of correction, the USPTO will afford patentee an opportunity to be heard and request reconsideration. Accordingly, patentee has **one month or thirty (30) days**, whichever is longer, to file a request for reconsideration of this patent term adjustment calculation. See 35 U.S.C. 154(b)(3)(B)(ii) and 37 CFR 1.322(a)(4). No extensions of time will be granted under 37 CFR 1.136.

Patentee should use document code PET.OP if electronically filing a request for reconsideration of this patent term adjustment calculation. The patentee must also include the information required by 37 CFR 1.705(b)(2) and the fee required by 37 CFR 1.18(e). If patentee does not file a timely request for reconsideration of this patent term adjustment calculation including the information required by 37 CFR 1.705(b)(2) and the fee required by 37 CFR 1.18(e), the USPTO will issue a certificate of correction reflecting the PTA determination noted above.

Patentee should be aware that in order to preserve the right to review in the United States District Court for the District of Columbia of the USPTO patent term adjustment determination, patentee must ensure that he or she also take the steps required under 35 U.S.C. 154(b)(4)(A) in a timely manner. Nothing in the request for recalculation should be construed as providing an alternative time frame for commencing a civil action under 35 U.S.C. 154(b)(4)(A).

Any questions concerning this decision should be directed to the Office of Patent Legal Administration at 571-272-7702.

UNITED STATES PATENT AND TRADEMARK OFFICE

COMMISSIONER FOR PATENTS
UNITED STATES PATENT AND TRADEMARK OFFICE
P.O. BOX 1450
ALEXANDRIA, VA 22313-1450
www.uspto.gov

MAIL

MAY 18 2005

DIRECTOR OFFICE
TECHNOLOGY CENTER 2600

Reed Smith LLP
1600 Market Street
2500 One Liberty Place
Philadelphia, PA 19103

In re Application of :
Ryan Steelberg, et al. :
Application No. 11/074,469 :
Filed: March 8, 2005 :
For: DYNAMIC DATA DELIVERY APPARATUS AND METHOD FOR SAME :

DECISION ON PETITION TO MAKE SPECIAL

This is a decision on the petition filed April 15, 2005, under 37 CFR §1.102(d) to make the application special and treated as pursuant to MPEP §708.02, section II (Infringement).

A grantable petition under 37 CFR §1.102(d) and MPEP §708.02, section II (Infringement), must be accompanied by the required fee and a statement alleging:

(1) that there is an infringing device or product actually on the market or method in use;
(2) that a rigid comparison of the alleged infringing device, product, or method with the claims of the application has been made, and that, in his or her opinion, some of the claims are unquestionably infringed; and
(3) that he or she has made or caused to be made a careful and thorough search of the prior art or has a good knowledge of the pertinent prior art. Further, Applicant must provide a copy of each of the references deemed most closely related to the subject matter encompassed by the claims if the references are not already of record.

The petitioner meets all the above-listed requirements. Accordingly, the petition is **GRANTED**.

The application will retain its special status throughout its entire prosecution, including any appeal to the Board of Patent Appeals and Interferences, subject only to diligent prosecution by the applicant.

The application is being forwarded to the examiner for expedited prosecution.

Krista Zele
Special Program Examiner
Technology Center 2600
Communications

SPE RESPONSE FOR CERTIFICATE OF CORRECTION

Paper No.: _____

DATE : 7-17-08

TO SPE OF : ART UNIT 2618

SUBJECT : Request for Certificate of Correction on Patent No.: 7313359 / 11/074469

A response is requested with respect to the accompanying request for a certificate of correction.

Please complete this form and return with file, within **7** days to:
Palm location **7580, Certificates of Correction Branch – South Tower – 9A22**
If response is for an IFW, **return to employee (named below) via PUBSCofC Team in MADRAS.**
With respect to the change(s) requested, correcting Office and/or Applicant's errors, should the patent read as shown in the certificate of correction (COCIN)? No new matter should be introduced, nor should the scope or meaning of the claims be changed.

Should request be granted?

Eva James

Thank You For Your Assistance

Certificates of Correction Branch
Tel. No. 703-305-8309

The request for issuing the above-identified correction(s) is hereby:
Note your decision on the appropriate box.

- ☒ **Approved** — **All** changes apply.
- ☐ **Approved in Part** — Specify below which changes **do not** apply.
- ☐ **Denied** — State the reasons for denial below.

Comments:

ok to enter

/Matthew Anderson/ — **SPE**

2618 — **Art Unit**

UNITED STATES PATENT AND TRADEMARK OFFICE

COMMISSIONER FOR PATENTS
UNITED STATES PATENT AND TRADEMARK OFFICE
P.O. BOX 1450
ALEXANDRIA, VA 22313-1450
www.uspto.gov

NOVOZYMES NORTH AMERICA, INC.
500 FIFTH AVENUE
SUITE 1600
NEW YORK NY 10110

COPY MAILED

MAR 3 1 2008

OFFICE OF PETITIONS

In re Application of	:	
Sjoeholm, et al.	:	
Application No. 11/074,491	:	DECISION ON PETITION
Filed: March 8, 2005	:	
Attorney Docket No. 6092.210-US	:	

This is a decision on the petition under the unintentional provisions of 37 CFR 1.137(b), filed September 20, 2007, to revive the above-identified application.

The petition is **GRANTED**.

The application became abandoned May 2, 2007 for failure to timely submit a proper reply to the non-final Office action mailed February 1, 2007. The non-final Office action set a three month shortened statutory period of time for reply. Notice of Abandonment was mailed September 14, 2007.

The petition satisfies the requirements of 37 CFR 1.137(b) in that petitioner has supplied (1) the reply in the form of an amendment, (2) the required petition fee, and (3) a proper statement of unintentional delay.

Telephone inquiries concerning this decision should be directed to the undersigned at (571) 272-3205.

This application is being referred to Technology Center AU 1654 for appropriate action by the Examiner in the normal course of business on the reply received herewith.

Alesia M. Brown
Petitions Attorney
Office of Petitions

UNITED STATES PATENT AND TRADEMARK OFFICE

UNITED STATES DEPARTMENT OF COMMERCE
United States Patent and Trademark Office
Address: COMMISSIONER FOR PATENTS
P.O. Box 1450
Alexandria, Virginia 22313-1450
www.uspto.gov

NOVOZYMES NORTH AMERICA, INC.
500 FIFTH AVENUE
SUITE 1600
NEW YORK, NY 10110

Mail Date: 04/20/2010

Applicant	: Carsten Sjoeholm	: DECISION ON REQUEST FOR
Patent Number	: 7608444	: RECALCULATION of PATENT
Issue Date	: 10/27/2009	: TERM ADJUSTMENT IN VIEW
Appliction No	: 11/074,491	: OF WYETH AND NOTICE OF INTENT TO
Filed	: 03/08/2005	: ISSUE CERTIFICATE OF CORRECTION
		:

The Request for Recalculation is **GRANTED** to the extent indicated.

The patent term adjustment has been determined to be **395** days. The USPTO will *sua sponte* issue a certificate of correction reflecting the amount of PTA days determined by the recalculation.

Prior to the issuance of the certificate of correction, the USPTO will afford patentee an opportunity to be heard and request reconsideration. Accordingly, patentee has **one month or thirty (30) days**, whichever is longer, to file a request for reconsideration of this patent term adjustment calculation. See 35 U.S.C. 154(b)(3)(B)(ii) and 37 CFR 1.322(a)(4). No extensions of time will be granted under 37 CFR 1.136.

Patentee should use document code PET.OP if electronically filing a request for reconsideration of this patent term adjustment calculation. The patentee must also include the information required by 37 CFR 1.705(b)(2) and the fee required by 37 CFR 1.18(e). If patentee does not file a timely request for reconsideration of this patent term adjustment calculation including the information required by 37 CFR 1.705(b)(2) and the fee required by 37 CFR 1.18(e), the USPTO will issue a certificate of correction reflecting the PTA determination noted above.

Patentee should be aware that in order to preserve the right to review in the United States District Court for the District of Columbia of the USPTO patent term adjustment determination, patentee must ensure that he or she also take the steps required under 35 U.S.C. 154(b)(4)(A) in a timely manner. Nothing in the request for recalculation should be construed as providing an alternative time frame for commencing a civil action under 35 U.S.C. 154(b)(4)(A).

Any questions concerning this decision should be directed to the Office of Patent Legal Administration at 571-272-7702.

SPE RESPONSE FOR CERTIFICATE OF CORRECTION

Paper No.: _____

DATE : 07-07-08

TO SPE OF : ART UNIT 2821

SUBJECT : Request for Certificate of Correction for Appl. No.: **11/074495** Patent No.: **7129901**

Please respond to this request for a certificate of correction within 7 days.

Please review the requested changes/corrections as shown in the **COCIN** document(s) in the IFW application image. No new matter should be introduced, nor should the scope or meaning of the claims be changed.

Please complete the response (see below) and forward the completed response to scanning using document code **COCX**.

Angela Green
Certificates of Correction Branch
703.308.9380 ext. 123

Thank You For Your Assistance

The request for issuing the above-identified correction(s) is hereby:
Note your decision on the appropriate box.

- ☑ **Approved** — **All** changes apply.
- ☐ **Approved in Part** — Specify below which changes **do not** apply.
- ☐ **Denied** — State the reasons for denial below.

Comments: _____

Douglas K. Owens — **SPE**

2821 — **Art Unit**

UNITED STATES PATENT AND TRADEMARK OFFICE

Commissioner for Patents
United States Patent and Trademark Office
P.O. Box 1450
Alexandria, VA 22313-1450
www.uspto.gov

DEC 19 2007

HUNTON & WILLIAMS/NEW YORK
INTELLECTUAL PROPERTY DEPT.
1900 K STREET, N.W.
SUITE 1200
WASHINGTON DC 20006-1109

In re Application of	:
Stefan Leo Jozef Masure	:
Serial No.: 11/074,498	: PETITION DECISION
Filed: March 8, 2005	:
Attorney Docket No.: 62376.000016	:

This is in response to the petition under 37 CFR 1.181, filed September 24, 2007, requesting acknowledgement of the filing of an RCE document

Applicant states that a facsimile transmission of a request for continued examination was filed on August 20, 2007, consisting of three pages. A review of PAIR appeared to show only two of the pages being received, but not the formal RCE request page. A review of PALM and IFW records associated with the application shows the RCE form being received August 20, 2007, but separately scanned from the facsimile transmission pages. The RCE paper was processed and forwarded to the examiner on November 21, 2007. In view of the above the petition is moot.

The petition is **DISMISSED**. The application will be forwarded to the examiner for further consideration.

Should there be any questions about this decision please contact William R. Dixon, Jr., by letter addressed to Director, TC 1600, at the address listed above, or by telephone at 571-272-0519 or by facsimile sent to the general Office facsimile number 571-273-8300.

William R., Dixon, Jr.
Special Program Examiner
Technology Center 1600

UNITED STATES PATENT AND TRADEMARK OFFICE

Commissioner for Patents
United States Patent and Trademark Office
P.O. Box 1450
Alexandria, VA 22313-1450
www.uspto.gov

HAN-YI LEE
BAYSHORE PATENT GROUP, LLC.
520 CHANTECLER DR.
FREMONT CA 94539

COPY MAILED

JUN 07 2005

OFFICE OF PETITIONS

In re Application of
Chien-Tsung Chen
Application No. 11/074,503
Filed: May 31, 2005
Attorney Docket No: US0502

: DECISION ON PETITION

This is a decision on the petition filed May 31, 2005, under 37 CFR 1.182, in response to the Notice Of Omitted Items, mailed April 7, 2005.

The matter is **GRANTED**.

On March 7, 2005, applicant deposited the above-identified application. However, on April 7, 2005, the Office of Initial Patent Examination mailed a "Notice Of Omitted Items" stating that, a filing date had been assigned but, *inter alia*, Figures 6A-7B as described in the specification appeared to have been omitted.

The mailing of a "Notice of Omitted Items" permits the applicant to either: (1) promptly establish prior receipt in the PTO of the omitted item at issue (generally by way of a date-stamped postcard receipt (MPEP 503)), or (2) promptly submit the omitted item in a nonprovisional application and accept the date of such submission as the application filing date. An applicant asserting that the omitted item was in fact deposited in the PTO with the application papers must file a petition (and the appropriate petition fee) with evidence of such deposit. An applicant desiring to submit the omitted item in a nonprovisional application and accept the date of such submission as the application filing date must file any omitted item with an oath or declaration in compliance with 37 CFR 1.63 and 1.64 referring to such item and a petition under 37 CFR 1.182 (with the petition fee under 37 CFR 1.17(h)) requesting the later filing date within two months of the date of the "Notice of Omitted Items" (37 CFR 1.181(f)).

Finally, the third option is in the absence of electing options 1) or 2) above, to constructively opt to accept the filing date which has been accorded with the papers filed upon application. With option 3), no petition under 37 CFR 1.182 is necessary for that purpose.

Since applicant neither admits nor denies that Figures 6A-7B were present upon filing and in view of the request to have the application accepted as filed on the date of receipt of the omitted drawing figures, the application will be accorded a filing date of May 31, 2005.

The Office of Initial Patent Examination will be notified that the application was complete upon the filing of the previously omitted drawing figures and to correct the filing date to May 31, 2005.

Any further concerns specific to this matter should be directed to the undersigned Petitions Attorney at (571) 272-3212.

Patricia Faison-Ball

Patricia Faison-Ball
Senior Petitions Attorney
Office of Petitions

UNITED STATES PATENT AND TRADEMARK OFFICE

COMMISSIONER FOR PATENTS
UNITED STATES PATENT AND TRADEMARK OFFICE
P.O. BOX 1450
ALEXANDRIA, VA 22313-1450
www.uspto.gov

COPY MAILED

AUG 27 2007

OFFICE OF PETITIONS

ROSENBERG, KLEIN & LEE
3458 ELLICOTT CENTER DRIVE-SUITE 101
ELLICOTT CITY MD 21043

In re Application of :
Chen : DECISION ON PETITION
Application No. 11/074,503 :
Filed: March 7, 2005 :
For: MR2349-1459 :

This is a decision on the petition under 37 CFR 1.137(b), filed July 20, 2007 to revive the above-identified application.

The petition is **GRANTED**.

This application became abandoned November 23, 2006 for failure to timely reply to the Notice to File Missing Parts of Provisional Application mailed September 22, 2006. The Notice set a two month shortened statutory period of time for reply. No petition for extension of time in accordance with 37 C.F.R. § 1.136 was timely submitted. Notice of Abandonment was mailed May 14, 2007.

A grantable petition pursuant to 37 C.F.R. § 1.137(b) must be accompanied by: (1) the required reply to the outstanding Office action or notice, unless previously filed; (2) the petition fee as set forth in 37 C.F.R. § 1.17(m); (3) a statement that the entire delay in filing the required reply from the due date for the reply until the filing of a grantable petition pursuant to 37 C.F.R. § 1.137(b) was unintentional; and (4) any terminal disclaimer (and fee set forth in 37 C.F.R. § 1.20(d)) required pursuant to 37 C.F.R. § 1.137(c).

The instant petition has been reviewed and found in compliance with the provisions of 37 C.F.R. § 1.137(b). Accordingly, the failure to timely submit a proper reply to the Notice is accepted as having been unintentionally delayed.

This application will be forwarded to the Office of Initial Patent Examination for further processing.

Telephone inquiries concerning this matter may be directed to the undersigned at (571) 272-3205.

Alesia M. Brown
Petitions Attorney
Office of Petitions

OIPE JC99
APR 1 5 2005
PATENT & TRADEMARK OFFICE

Express Mailing Label
#ED523182804US
PATENT
File No. 1635-031

IN THE UNITED STATES PATENT AND TRADEMARK OFFICE

In Re Application of	)	Date: April 15, 2005
ROY I. CARRIKER	)	1761
Application No. 11/074,511	)	
For: NUT CRACKER	)	Filing Date: 03/07/2005

APPLICANT'S PETITION TO MAKE SPECIAL

Commissioner for Patents
P.O. Box 1450
Alexandria, VA 22313-1450

Dear Sir:

The applicant now petitions the Commissioner to make application No. 11/074,511 special, without fee, on the basis of the applicant's age. By separate declaration, appended hereto and incorporated herein by this reference, the applicant states facts pertinent to his age. As a consequence, the applicant requests the Commissioner to make special this application and that its handling be expedited. This petition is made pursuant to 37 CFR 1.102(c) and MPEP 708.02 IV.

Dated: April 15, 2005.

Respectfully submitted,

FLOYD E. IVEY
Reg. No. 35,552

Floyd E. Ivey
Attorney at Law
P.O. Box 6125
Kennewick, WA 99336
(509) 735-3581

PETITION GRANTED

Richard Crispino
Special Program Examiner
Technology Center 1700
MAY 2 3 2005

UNITED STATES PATENT AND TRADEMARK OFFICE

Commissioner for Patents
United States Patent and Trademark Office
P.O. Box 1450
Alexandria, VA 22313-1450
www.uspto.gov

HEWLETT-PACKARD COMPANY
PO BOX 272400
FORT COLLINS CO 80527-2400

COPY MAILED

JUL 0 8 2005

OFFICE OF PETITIONS

In re Application of	:	
Lotz, et al.	:	
Application No. 11/074,526	:	DECISION ON PETITION
Filed: March 7, 2005	:	
Attorney Docket No. 200402388-3	:	

This is a decision on the "APPLICANT'S RESPONSE TO NOTICE OF OMITTED ITEMS(S) IN A NONPROVISIONAL APPLICATION FILED UNDER 37 CFR 1.53(b)", filed May 16, 2005, requesting, in effect, that the above identified application be accorded a filing date of May 7, 2005, with Figure 4 of the drawings as part of the original disclosure.

The petition is **DISMISSED**.

The application was filed on March 7, 2005. However, on May 6, 2005, the Office mailed a "Notice of Omitted Item(s) in a Nonprovisional Application", stating that the application had been accorded a filing date of March 7, 2005; however, Figure 4 of the drawings as described in the specification appeared to have been omitted.

In response, the present response was filed. Petitioner does not argue that Figure 4 was included with the application papers as filed. However, petitioner states that the drawings were filed with parent application No. 10/856,557 which was incorporated by reference.

Figures not present on the filing date cannot be considered a part of the original disclosure of the application. As Figure 4 was not present in the Office on March 7, 2005, the application can not be accorded the March 7, 2005 filing date with the drawings of Figure 4 as a part of the original disclosure.

Accordingly, the Notice mailed on May 6, 2005 was correct in stating that Figure 4 of the drawings appeared to have been omitted. Therefore, the requirement for the omitted figures of drawings was proper and will not be withdrawn.

However, a review of the application file reveals that the transmittal letter included an incorporation by reference statement.

MPEP § 201.06(c) states that:

> . . . an applicant may incorporate by reference the prior application by including, in the application-as-filed, a statement that such specifically enumerated prior application or applications are "hereby incorporated herein by reference." The statement may appear in the specification or in the application transmittal letter. The inclusion of this incorporation by reference of the prior application(s) will permit an applicant to **amend** the continuing application to include any subject matter in such prior application(s), **without the need for a petition** (emphasis added).

Obviously, in view of the incorporation by reference statement to the prior filed application, the drawing of Figure 4 is not new matter if it was a part of the disclosure of that application.

Applicants should file an amendment with Figure 4 for consideration by the Examiner prior to the first Office action.

The application is being returned to the Office of Initial Patent Examination for further processing, using the application papers filed March 7, 2005, and for indication in Office records that three (3) sheets of drawings were present on filing.

Telephone inquiries specific to this matter should be directed to the undersigned at 571-272-3207.

Cliff Congo
Petitions Attorney
Office of Petitions

UNITED STATES PATENT AND TRADEMARK OFFICE

Commissioner for Patents
United States Patent and Trademark Office
P.O. Box 1450
Alexandria, VA 22313-1450
www.uspto.gov

ROCKWELL COLLINS, INC.
INTELLECTUAL PROPERTY DEPARTMENT
400 COLLINS ROAD NE
M/S 124-323
CEDAR RAPIDS IA 52498

COPY MAILED
SEP 25 2006
OFFICE OF PETITIONS

In re Application of
Woodell, et al.
Application No. 11/074,531
Filed: March 8, 2005
Attorney Docket No. 04CF174/KE
For: REMOVAL OF SPURIOUS AIRCRAFT DETECTIONS ON WEATHER RADAR

ON PETITION

This is a decision on the petition under 37 CFR 1.137(b), filed April 28, 2006, to revive the above-identified application.

The petition is **dismissed**.

Any request for reconsideration of this decision must be submitted within TWO (2) MONTHS from the mail date of this decision. Extensions of time under 37 CFR 1.136(a) are permitted. The reconsideration request should include a cover letter entitled "Renewed Petition under 37 CFR 1.137(b)." Petitioner is advised that this is not a final agency decision.

This application became abandoned for failure to timely reply to the Notice to File Missing Parts of Nonrovisional Application, mailed May 5, 2005, which set an extendable two month period for reply. No extensions of time being obtained and no reply being filed, the application became abandoned on July 6, 2005. A Notice of Abandonment was mailed on January 9, 2006.

A grantable petition pursuant to 37 CFR 1.137(b) must be accompanied by:

(1) the required reply, unless previously filed.;

(2) the petition fee as set forth in 37 CFR 1.17(m);

(3) a statement that the **entire** delay in filing the required reply from the due date for the reply until the filing of a grantable petition pursuant to 37 CFR 1.137(b) was unintentional. The Director may

require additional information where there is a question whether the delay was unintentional; and

(4) any terminal disclaimer (and fee set forth in 37 CFR 1.20(d)) required pursuant to 37 CFR 1.137(d).

The instant petition does not satisfy requirement (1) above.

Petitioner has not submitted the $130.00 late declaration surcharge that was required by the May 5, 2005 Notice.

Further correspondence with respect to this matter should be addressed as follows:

By mail: Mail Stop PETITION
Commissioner for Patents
Post Office Box 1450
Alexandria, VA 22313-1450

By hand: U.S. Patent and Trademark Office
Customer Service Window, Mail Stop Petition
Randolph Building
401 Dulany Street
Alexandria, VA 22314

By FAX: (571) 273-8300 – ATTN: Office of Petitions

Telephone inquiries concerning this decision should be directed to the undersigned at (571) 272-3230.

Shirene Willis Brantley

Shirene Willis Brantley
Senior Petitions Attorney
Office of Petitions

UNITED STATES PATENT AND TRADEMARK OFFICE

Commissioner for Patents
United States Patent and Trademark Office
P.O. Box 1450
Alexandria, VA 22313-1450
www.uspto.gov

ROCKWELL COLLINS, INC.
INTELLECTUAL PROPERTY DEPARTMENT
400 COLLINS ROAD NE
M/S 124-323
CEDAR RAPIDS IA 52498

COPY MAILED

OCT 0 1 2007

OFFICE OF PETITIONS

In re Application of :
Woodell, et al. :
Application No. 11/074,531 : ON PETITION
Filed: March 8, 2005 :
Attorney Docket No. 04CF174/KE :
For: REMOVAL OF SPURIOUS AIRCRAFT DETECTIONS ON WEATHER RADAR

This is a decision on the reconsideration petition under 37 CFR 1.137(b), filed November 10, 2006, to revive the above-identified application.

The petition is **granted**.

This application became abandoned for failure to timely reply to the Notice to File Missing Parts of Nonrovisional Application, mailed May 5, 2005, which set an extendable two month period for reply. No extensions of time being obtained and no reply being filed, the application became abandoned on July 6, 2005. A Notice of Abandonment was mailed on January 9, 2006.

Applicants have submitted a proper reply to the May 5, 2005 Notice in the form of an executed declaration and $130.00 surcharge, a proper statement of the unintentional nature of the delay in responding to the May 5, 2005 Notice, and the $1,500.00 petition fee. Accordingly, the petition under 37 CFR 1.137(b) is granted.

After the mailing of this decision, the file will be returned to the Office of Initial Patent Examination for further processing.

Telephone inquiries concerning this matter may be directed to the undersigned at (571) 272-3230.

Shirene Willis Brantley

Shirene Willis Brantley
Senior Petitions Attorney
Office of Petitions

UNITED STATES PATENT AND TRADEMARK OFFICE

COMMISSIONER FOR PATENTS
UNITED STATES PATENT AND TRADEMARK OFFICE
P.O. BOX 1450
ALEXANDRIA, VA 22313-1450
www.uspto.gov

BRINKS HOFER GILSON & LIONE
P.O. BOX 10395
CHICAGO, IL 60610

COPY MAILED
SEP 0 8 2006
OFFICE OF PETITIONS

In re Application of	:	
Garry Wayne Kyle Jr.	:	DECISION ON APPLICATION
Application No. 11/074,543	:	FOR PATENT TERM ADJUSTMENT
Filed: March 8, 2005	:	
Atty. Dkt. No.: 10703/61	:	

This is a decision on the "REQUEST FOR RECONSIDERATION OF PATENT TERM ADJUSTMENT PURSUANT TO 37 C.F.R. § 1.705(b)" filed May 22, 2006. Applicant requests that the initial determination of patent term adjustment under 35 U.S.C. 154(b) be corrected from zero (0) days to forty (40) days.

The application for patent term adjustment is **GRANTED**.

The Office has updated the PAIR screen to reflect that the correct Patent Term Adjustment (PTA) determination at the time of the mailing of the Notice of Allowance is forty (40) days. A copy of the updated PAIR screen, showing the correct determination, is enclosed.

On April 18, 2006, the Office mailed the Determination of Patent Term Adjustment under 35 U.S.C. 154(b) in the above-identified application. The Notice stated that the patent term adjustment to date is 0 days. On May 22, 2005, applicant timely[1] submitted an application for patent term adjustment, asserting, in essence, that the correct number of days of PTA at the time of the mailing of the Notice of Allowance is 40 days. Applicant asserts that the patent term adjustment should not have been reduced by one hundred and twenty five days (125) because applicant filed a reply to the Non-Final Rejection mailed August

[1] The Issue Fee payment was also received on May 22, 2006.

5, 2005 on November 7, 2005. Accordingly, applicant believes the delay pursuant to 37 CFR 1.704(b) to be two days. Applicant further asserts that the USPTO failed to timely reply to the November 7, 2005 response until April 18, 2006. Thus, applicant believes the period of adjustment for Office delay is forty-two (42) days. Applicant contends that the proper PTA determination at the time of the mailing of the Notice of Allowance is forty (40) days.

Applicant's arguments are well taken.

On August 5, 2005 the USPTO mailed a Non-Final Rejection to applicant. Applicant had until November 5, 2005 to file a response to the Non-Final Rejection. Applicant had an interview at the USPTO on November 7, 2005 and had a response to the rejection sent via fax the same day. The PTO Auto-Reply Facsimile Transmission verifies the date of the response. Under CFR 1.704(b), applicant replied two days late. Accordingly, the patent term adjustment should have been reduced by two days.

The USPTO then had until March 7, 2006 to respond to the reply sent by applicant. The PTO did not send the next Office action, the Notice of Allowance until April 18, 2006. Under CFR 1.702 (a)(2) the PTO did not timely respond and patent term adjustment should have been increased forty-two (42) days.

In view thereof, the correct determination of patent term adjustment at the time of the mailing of the Notice of Allowance is forty (40) days.

Submission of the $200 fee set forth in § 1.18(e) is acknowledged. No additional fee is required.

The Office will forward the file to the Office of Patent Publication so that the patent can be issued in a timely manner.

Telephone inquiries specific to this matter should be directed to the undersigned at (571) 272-3219.

Nancy Johnson

Nancy Johnson
Senior Petitions Attorney
Office of Petitions

Enclosure: Copy of Adjustment PAIR Calculation

Day : Thursday
Date: 8/31/2006

PALM INTRANET

Time: 16:34:49

PTA Calculations for Application: 11/074543			
Application Filing Date:	03/08/2005	PTO Delay (PTO):	0
Issue Date of Patent:		Three Years:	0
Pre-Issue Petitions:	0	Applicant Delay (APPL):	125
Post-Issue Petitions:	0	Total PTA (days):	40
PTO Delay Adjustment:	165		

File Contents History

Number	Date	Contents Description	PTO	APPL	START
37	08/31/2006	ADJUSTMENT OF PTA CALCULATION BY PTO		2	
36	08/31/2006	ADJUSTMENT OF PTA CALCULATION BY PTO	42		
35	08/31/2006	ADJUSTMENT OF PTA CALCULATION BY PTO	125		
27	04/18/2006	MAIL NOTICE OF ALLOWANCE			
26	04/17/2006	ISSUE REVISION COMPLETED			
25	04/17/2006	NOTICE OF ALLOWANCE DATA VERIFICATION COMPLETED			
24	04/17/2006	CASE DOCKETED TO EXAMINER IN GAU			
23	04/17/2006	NOTICE OF ALLOWABILITY			
22	03/21/2006	DATE FORWARDED TO EXAMINER			
21	03/10/2006	RESPONSE AFTER NON-FINAL ACTION		125	16
20	03/10/2006	REQUEST FOR EXTENSION OF TIME - GRANTED			
17	11/07/2005	EXAMINER INTERVIEW SUMMARY RECORD (PTOL - 413)			
16	08/05/2005	MAIL NON-FINAL REJECTION			
15	08/04/2005	NON-FINAL REJECTION			
14	07/05/2005	REFERENCE CAPTURE ON IDS			
13	07/05/2005	INFORMATION DISCLOSURE STATEMENT (IDS) FILED			
12	07/09/2005	IFW TSS PROCESSING BY TECH CENTER COMPLETE			
11	07/09/2005	CASE DOCKETED TO EXAMINER IN GAU			
10	03/08/2005	REFERENCE CAPTURE ON IDS			
9	03/08/2005	INFORMATION DISCLOSURE STATEMENT (IDS) FILED			
8	03/31/2005	APPLICATION RETURN FROM OIPE			
7	04/01/2005	APPLICATION IS NOW COMPLETE			

6	03/31/2005	APPLICATION RETURN TO OIPE			
5	03/31/2005	APPLICATION DISPATCHED FROM OIPE			
4	03/31/2005	APPLICATION IS NOW COMPLETE			
3	03/28/2005	CLEARED BY OIPE CSR			
2	03/23/2005	IFW SCAN & PACR AUTO SECURITY REVIEW			
1	03/08/2005	INITIAL EXAM TEAM NN			

Search Another: Application# Search

EXPLANATION OF PTA CALCULATION

EXPLANATION OF PTE CALCULATION

To go back use Back button on your browser toolbar.

Back to PALM | ASSIGNMENT | OASIS | Home page

UNITED STATES PATENT AND TRADEMARK OFFICE

Commissioner for Patents
United States Patent and Trademark Office
P.O. Box 1450
Alexandria, VA 22313-1450
www.uspto.gov
DIW Jun-05

NEIL K. NYDEGGER
NYDEGGER & ASSOCIATES
348 OLIVE STREET
SAN DIEGO CA 92103

COPY MAILED

JUN 2 4 2005

OFFICE OF PETITIONS

In re Application of	:	
Timothy W. James	:	DECISION REFUSING STATUS
Application No. 11/074,581	:	UNDER 37 CFR 1.47(b)
Filed: 8 March, 2005	:	
Atty Docket No. 11046.16	:	

This is in response to the petition filed on 27 May, 2005, under 37 CFR 1.47(b).

The petition under 37 CFR 1.47(b) is **DISMISSED**.

Rule 47 applicant is given TWO MONTHS from the mailing date of this decision to reply, correcting the below-noted deficiencies. Any reply should be entitled "Request for Reconsideration of Petition Under 37 CFR 1.47(b)," and should only address the deficiencies noted below, except that the reply may include an oath or declaration executed by the non-signing inventor. **FAILURE TO RESPOND WILL RESULT IN ABANDONMENT OF THE APPLICATION.** Extensions of time may be obtained in accordance with 37 CFR 1.136(a).

The above-identified application was filed on 8 March, 2005, without an executed oath or declaration. Accordingly, on 28 March, 2005, Initial Patent Examination Division mailed a Notice to File Missing Parts of Nonprovisional Application requiring the statutory basic filing fee, an oath or declaration, and a surcharge for their late filing. A two (2) month period for reply was set.

In response, on 27 May, 2005, petitioner filed the filing fee, present petition and petition fee. The surcharge and basic filing fee were also filed.

Petitioner asserts that a copy of the application was sent by email to the non-signing inventor, but that the inventor has refused to sign the declaration.

A grantable petition under 37 CFR 1.47(b) requires:

(1) proof that the non-signing inventor cannot be reached or refuses to sign the oath or declaration after having been presented with the application papers (specification, claims and drawings);

(2) an acceptable oath or declaration in compliance with 35 U.S.C. §§ 115 and 116;

(3) the petition fee;

(4) a statement of the last known address of the non-signing inventor;

(5) proof of proprietary interest, and

(6) proof of irreparable damage.

The petition lacks items (1), (2), and (6).

In regards to item (1), petitioner has not provided sufficient proof that the non-signing inventor, Timothy W. James was sent or presented with a copy of the application as filed (specification, including claims, drawings, if any, and the declaration).[1]

In this regard, it is noted that petitioner's counsel, Neil K. Nydegger, states in the petition that a copy of the application was sent by email to James. However, no proof has been provided that the email message containing the application papers was ever received by James, or whether the email address to which the papers was sent is currently being monitored by James.

As such, in order for Rule 47(b) status to be granted in this application, petitioner must show that the non-signing inventor was presented with the application papers (specification, including the claims, drawings, if any, and the declaration) for the present application. In this case, as the declaration was sent to James' last known address, it is suggested that petitioner mail a copy of the application papers to James' last known address.

Petitioner may show proof that a copy of the application was sent or given to the non-signing inventors for review by providing a copy of the cover letter transmitting the application papers (specification, including claims, drawings, if any, and the declaration) to the non-signing inventors or details given in an

---

[1] MPEP 409.03(d).

affidavit or declaration of facts by a person having first-hand knowledge of the details.

If the application is returned as undeliverable, petitioner should present a copy of the envelope showing that the application sent to the last known address of the non-signing inventors was returned as undeliverable by the post office.

Likewise, before a *bona fide* refusal to sign the declaration can be alleged, petitioner must show that a copy of the application was sent or given to the non-signing inventor. If the inventor refuses in writing, petitioners must submit a copy of that written refusal with any renewed petition. If the refusal was made orally to a person, then that person must provide details of the refusal in an affidavit or declaration of fact.

In regards to item (2), an oath or declaration in compliance with 37 CFR 1.63 must be supplied. The declaration must include the name, citizenship, residence, and mailing address of the non-signing inventor. If the inventor refuses to sign the declaration, the declaration must be signed by an officer of the corporation (chief executive officer, president, vice president, secretary, or treasurer) on behalf of and as agent for the non-signing inventor. The officer must identify his or her title in the declaration. If the declaration is not signed by an officer of the corporation, then proof of the authority of the person signing on behalf of the corporation must be submitted (See MPEP 409.03(b)).

The declaration is objected to because it has not been signed by an officer of the corporation. While it is noted that the Chief Executive Officer of assignee MAGNEVU has signed on a separate page, the declaration itself must be signed. It is recommended that a new declaration containing a signature block for both the non-signing inventor and the corporate officer signing on behalf of the assignee be provided with a renewed petition. The signature block for the non-signing inventor should be left blank, and the corporate officer should sign a separate signature block.

In regards to item (6), petitioner must establish irreparable damages in accordance with MPEP 409.03(g). A statement by applicant that the filing is necessary to prevent irreparable damage or to preserve the rights of the parties is sufficient.

Further correspondence with respect to this matter should be addressed as follows:

By mail: Mail Stop Petition
Commissioner for Patents
P.O. Box 1450
Alexandria, VA 22313-1450

By FAX: (703) 872-9306
Attn: Office of Petitions

By hand: Customer Service Window
Mail Stop Petition
Randolph Building
401 Dulany Street
Alexandria, VA 22134

Telephone inquiries related to this decision should be directed to the undersigned at (571) 272-3231.

DWood

Douglas I. Wood
Senior Petitions Attorney
Office of Petitions

UNITED STATES PATENT AND TRADEMARK OFFICE

Commissioner for Patents
United States Patent and Trademark Office
P.O. Box 1450
Alexandria, VA 22313-1450
www.uspto.gov
DIW Sep-05

NEIL K. NYDEGGER
NYDEGGER & ASSOCIATES
348 OLIVE STREET
SAN DIEGO CA 92103

COPY MAILED

SEP 09 2005

OFFICE OF PETITIONS

In re Application of	:	
Timothy W. James	:	DECISION ACCORDING STATUS
Application No. 11/074,581	:	UNDER 37 CFR 1.47(b)
Filed: 8 March, 2005	:	
Atty Docket No. 11046.16	:	

This is in response to the petition filed on 22 August, 2005, under 37 CFR 1.47(b).

The petition is **GRANTED**.

Petitioner has shown that the sole inventor has refused to join in the filing of the above-identified application after having been sent a copy of the application papers. Specifically, petitioners shown that a copy of the application was sent to the non-signing inventor, and that the non-signing inventor signed a Certified Mail Return Receipt indicating receipt of the application papers. The non-signing inventor, however, has failed to sign and return the declaration. In addition, petitioner has shown, via a copy of the Employee Confidentiality and Invention Assignment Agreement signed by the non-signing inventor, that petitioner MAGNEVU has a proprietary interest in the above-identified application. Lastly, petitioner has submitted a declaration in compliance with 37 CFR 1.63, signed by Freeman H. Rose, Chief Executive Officer of MAGNEVU, and has demonstrated that such action is necessary to preserve the rights of the parties.

This application and papers have been reviewed and found in compliance with 37 CFR 1.47(b). This application is hereby accorded Rule 1.47(b) status.

As provided in Rule 1.47(c), this Office will forward notice of this application's filing to the non-signing inventor at the

residence address listed on the declaration. Notice of the filing of this application will also be published in the *Official Gazette*.

The application file is being referred to Technology Center Art Unit 3737 for examination in due course.

Telephone inquiries related to this decision should be directed to the undersigned at (571) 272-3231.

Douglas I. Wood
Senior Petitions Attorney
Office of Petitions

UNITED STATES PATENT AND TRADEMARK OFFICE

Commissioner for Patents
United States Patent and Trademark Office
P.O. Box 1450
Alexandria, VA 22313-1450
www.uspto.gov
DIW Sep-05

Timothy W. James
89 Vereda Cordillera
Goleta CA 93117

COPY MAILED

SEP 09 2005

OFFICE OF PETITIONS

In re Application of
Timothy W. James
Application No. 11/074,581
Filed: 8 March, 2005
For: SYSTEM AND METHOD FOR BONE STRENGTH ASSESSMENT

Dear Mr. James:

You are named as the sole inventor in the above identified United States patent application, filed under the provisions of 35 U.S.C. 116 (United States Code), and 37 CFR 1.47(b), Rules of Practice in Patent Cases. Should a patent be granted on the application you will be designated therein as the sole inventor.

As the named inventor you are entitled to inspect any paper in the file wrapper of the application, order copies of all or any part thereof (at a prepaid cost per 37 CFR 1.19) or make your position of record in the application. Alternatively, you may arrange to do any of the preceding through a registered patent attorney or agent presenting written authorization from you. If you care to join the application, counsel of record (see below) would presumably assist you. Joining in the application would entail the filing of an appropriate oath or declaration by you pursuant to 37 CFR 1.63.

Telephone inquiries regarding this communication should be directed to the undersigned at 571/272-3231. Requests for information regarding your application should be directed to the File Information Unit at 703/308-2733. Information regarding how to pay for and order a copy of the application, or a specific paper in the application, should be directed to Certification Division at 703/308-9726 or 1-800-972-6382 (outside the Washington D.C. area).

D Wood

Douglas I. Wood
Senior Petitions Attorney
Office of Petitions

NEIL K. NYDEGGER
NYDEGGER & ASSOCIATES
348 OLIVE STREET
SAN DIEGO CA 92103

UNITED STATES PATENT AND TRADEMARK OFFICE

Commissioner for Patents
United States Patent and Trademark Office
P.O. Box 1450
Alexandria, VA 22313-1450
www.uspto.gov

CIPHERGEN C/O FOLEY & LARDNER LLP
3000 K STREET NW
SUITE 500
WASHINGTON, DC 20007

COPY MAILED

AUG 24 2007

OFFICE OF PETITIONS

In re Application of	:	
Egisto Boschetti, et al.	:	
Application No. 11/074,591	:	DECISION ON PETITION
Filed: March 8, 2005	:	TO WITHDRAW
Attorney Docket No. 62499-5013-US	:	FROM RECORD
	:	

This is a decision on the Request to Withdraw as attorney or agent of record under 37 C.F.R. § 1.36(b) filed March 30, 2007.

The request is **DISMISSED** as moot.

A review of the file record indicates that the power of attorney to Foley & Lardner, LLP has been revoked by the assignee of the patent application on April 23, 2007. Accordingly, the request to withdraw under 37 C.F.R. § 1.36(b) is moot.

All future communications from the Office will continue to be directed to the below-listed address until otherwise notified by applicant.

Telephone inquires concerning this decision should be directed to undersigned at 571-272-1642.

April M. Wise
Petitions Examiner
Office of Petitions

cc: JEFFRY S. MANN
MORGAN, LEWIS & BOCKIUS, LLP
ONE MARKET, SPEAR STREET TOWER
SAN FRANCISCO, CA 94105

UNITED STATES PATENT AND TRADEMARK OFFICE

UNITED STATES DEPARTMENT OF COMMERCE
United States Patent and Trademark Office
Address: COMMISSIONER FOR PATENTS
P.O. Box 1450
Alexandria, Virginia 22313-1450
www.uspto.gov

TEXAS INSTRUMENTS INCORPORATED
P O BOX 655474, M/S 3999
DALLAS, TX 75265

Mail Date: 05/06/2010

Applicant	: Narendar Shankar	: DECISION ON REQUEST FOR
Patent Number	: 7613924	: RECALCULATION of PATENT
Issue Date	: 11/03/2009	: TERM ADJUSTMENT IN VIEW
Application No	: 11/074,611	: OF WYETH AND NOTICE OF INTENT TO
Filed	: 03/08/2005	: ISSUE CERTIFICATE OF CORRECTION
		:

The Request for Recalculation is **GRANTED** to the extent indicated.

The patent term adjustment has been determined to be **1255** days. The USPTO will *sua sponte* issue a certificate of correction reflecting the amount of PTA days determined by the recalculation.

Prior to the issuance of the certificate of correction, the USPTO will afford patentee an opportunity to be heard and request reconsideration. Accordingly, patentee has **one month or thirty (30) days**, whichever is longer, to file a request for reconsideration of this patent term adjustment calculation. See 35 U.S.C. 154(b)(3)(B)(ii) and 37 CFR 1.322(a)(4). No extensions of time will be granted under 37 CFR 1.136.

Patentee should use document code PET.OP if electronically filing a request for reconsideration of this patent term adjustment calculation. The patentee must also include the information required by 37 CFR 1.705(b)(2) and the fee required by 37 CFR 1.18(e). If patentee does not file a timely request for reconsideration of this patent term adjustment calculation including the information required by 37 CFR 1.705(b)(2) and the fee required by 37 CFR 1.18(e), the USPTO will issue a certificate of correction reflecting the PTA determination noted above.

Patentee should be aware that in order to preserve the right to review in the United States District Court for the District of Columbia of the USPTO patent term adjustment determination, patentee must ensure that he or she also take the steps required under 35 U.S.C. 154(b)(4)(A) in a timely manner. Nothing in the request for recalculation should be construed as providing an alternative time frame for commencing a civil action under 35 U.S.C. 154(b)(4)(A).

Any questions concerning this decision should be directed to the Office of Patent Legal Administration at 571-272-7702.

UNITED STATES PATENT AND TRADEMARK OFFICE

Commissioner for Patents
United States Patent and Trademark Office
P.O. Box 1450
Alexandria, VA 22313-1450
www.uspto.gov

Paper No.

WEISS & MOY PC
4204 NORTH BROWN AVENUE
SCOTTSDALE AZ 85251

MAILED

JUN 18 2009

OFFICE OF PETITIONS

In re Application of :
John Warren Larson : DECISION ON PETITION
Application No. 11/074,617 :
Filed: March 8, 2005 :
Atty Docket No. 6089P2776 :

This is a decision on the PETITION FOR REVIVAL OF AN APPLICATION FOR PATENT ABANDONED UNINTENTIONALLY UNDER 37 CFR 1.137(b) filed December 11, 2008.

The petition is **GRANTED**.

The above-identified application became abandoned for failure to file a reply to the non-final Office action mailed April 15, 2008. This Office action set a shortened statutory period for reply of three (3) months, with extensions of time obtainable under § 1.136(a). No reply filed and no extension of time obtained, the application became abandoned July 16, 2008. A courtesy Notice of Abandonment was mailed on October 28, 2008.

The petition includes the required reply in the form of an amendment, the required statement of unintentional delay and payment of the petition fee. No terminal disclaimer is required.

Technology Center AU 3691 has been advised of this decision. The application is, thereby, forwarded to the examiner for consideration of the reply submitted on petition filed December 11, 2008.

Telephone inquiries specific to this matter should be directed to the undersigned at (571) 272-3219.

Nancy Johnson
Senior Petitions Attorney
Office of Petitions

UNITED STATES PATENT AND TRADEMARK OFFICE

Commissioner for Patents
United States Patent and Trademark Office
P.O. Box 1450
Alexandria, VA 22313-1450
www.uspto.gov

NIXON PEABODY, LLP
401 9TH STREET, NW
SUITE 900
WASHINGTON, DC 20004-2128

COPY MAILED

FEB 25 2009

OFFICE OF PETITIONS

In re Patent No. 7,303,477 :
Issue Date: December 4, 2007 :
Application No. 11/074,672 : ON PETITION
Filed: March 9, 2005 :
Attorney Docket No. 032758-10 :

This is a decision on the petition under 37 CFR 1.182, filed February 5, 2009, requesting issuance of a duplicate Letters Patent for the above-identified patent.

Since the statement of lost patent grant was signed by the attorney of record, the petition is **granted**.

The Office of Data Management is directed to issue duplicate Letters Patent.

A copy of this decision is being forwarded to the Office of Data Management for issuance of the duplicate Letters Patent.

This patent file is being referred to the Files Repository.

Any questions concerning this matter may be directed to the undersigned at (571) 272-3226. Any questions concerning issuance of the duplicate Letters Patent should be directed to Niomi Farmer at (703) 308-9250 ext 119.

Andrea Smith
Petitions Examiner
Office of Petitions

cc: Niomi Farmer, P/OPPD, South Tower 8th Floor, Room C23
FAX No. (571) 270-9753

UNITED STATES PATENT AND TRADEMARK OFFICE

Commissioner for Patents
United States Patent and Trademark Office
P.O. Box 1450
Alexandria, VA 22313-1450
www.uspto.gov

COPY MAILED

NOV 2 0 2009

OFFICE OF PETITIONS

NIXON PEABODY, LLP
401 9TH STREET, NW
SUITE 900
WASHINGTON, DC 20004-2128

In re Application of	:	
Shunpei Yamazaki, et al.	:	
Application No.: 11/074,687	:	ON PETITION
Filed: March 9, 2005	:	
Attorney Docket No.: 740756-2820	:	

This is a decision on the petition, filed November 18, 2009, under 37 CFR 1.313(c)(2) to withdraw the above-identified application from issue after payment of the issue fee.

The petition is **GRANTED**.

The above-identified application is withdrawn from issue for consideration of a submission under 37 CFR 1.114 (request for continued examination). See 37 CFR 1.313(c)(2).

Petitioner is advised that the issue fee paid on November 6, 2009, cannot be refunded. If, however, this application is again allowed, petitioner may request that it be applied towards the issue fee required by the new Notice of Allowance.[1]

Telephone inquiries relating to this decision should be directed to the undersigned at (571) 272-3204.

The application is being referred to Technology Center AU 2879 for further processing of the request for continued examination under 37 CFR 1.114 and for consideration of the concurrently filed Information Disclosure Statement (IDS).

/SDB/

Sherry D. Brinkley
Petitions Examiner
Office of Petitions

[1] *The request to apply the issue fee to the new Notice may be satisfied by completing and returning the new Part B – Fee(s) Transmittal Form (along with any balance due at the time of submission). Petitioner is advised that the Issue Fee Transmittal Form must be completed and timely submitted to avoid abandonment of the application.*

UNITED STATES PATENT AND TRADEMARK OFFICE

Commissioner for Patents
United States Patent and Trademark Office
P.O. Box 1450
Alexandria, VA 22313-1450
www.uspto.gov

LANIER, FORD, SHAVER & PAYNE, P.C.
P O BOX 2087
HUNTSVILLE AL 35804

COPY MAILED

AUG 01 2007

OFFICE OF PETITIONS

In re Application of
Petriva W. Coley
Application No. 11/074,698
Filed: March 9, 2005
Attorney Docket No. 07-0260.02

ON PETITION

This is a decision on the petition under the unintentional provisions of 37 CFR 1.137(b), filed March 16, 2007, to revive the above-identified application.

The petition is **GRANTED**.

The application became abandoned for failure to timely file a reply within the meaning of 37 CFR 1.113 to the final Office action of June 1, 2006. The proposed reply required for consideration of a petition to revive must be a Notice of Appeal (and appeal fee required by 37 CFR 41.20(b)(2)), an amendment that prima facie places the application in condition for allowance, a Request for Continued Examination (RCE) and submission (37 CFR 1.114), or the filing of a continuing application under 37 CFR 1.53(b). See MPEP 711.03(c)(II)(A)(2). Since the amendment submitted does not prima facie place the application in condition for allowance, the reply required must be a Notice of Appeal (and appeal fee), RCE, or the filing of a continuing application under 37 CFR 1.53(b).

The petition satisfies the requirements of 37 CFR 1.137(b) in that petitioner has supplied (1) the reply in the form of a continuing application under 37 CFR 1.53(b); (2) the petition fee of $750; and (3) a proper statement of unintentional delay.

This application is being revived solely for purposes of continuity. As continuity has been established by this decision, the application is again abandoned in favor of continuing application No. 11/175,211.

Telephone inquiries concerning this decision should be directed to April Wise at (571) 272-1642.

Irvin Dingle
Petitions Examiner
Office of Petitions

UNITED STATES PATENT AND TRADEMARK OFFICE

UNITED STATES DEPARTMENT OF COMMERCE
United States Patent and Trademark Office
Address: COMMISSIONER FOR PATENTS
P.O. Box 1450
Alexandria, Virginia 22313-1450
www.uspto.gov

APPLICATION NUMBER	FILING OR 371 (c) DATE	FIRST NAMED APPLICANT	ATTY. DOCKET NO./TITLE
11/074,698	03/09/2005	Petriva W. Coley	25877.00

CONFIRMATION NO. 3371

OC000000025055477

37833
LITMAN LAW OFFICES, LTD.
P.O. BOX 15035
CRYSTAL CITY STATION
ARLINGTON, VA 22215

Date Mailed: 07/27/2007

NOTICE REGARDING CHANGE OF POWER OF ATTORNEY

This is in response to the Power of Attorney filed 03/16/2007.

- The Power of Attorney to you in this application has been revoked by the applicant. Future correspondence will be mailed to the new address of record(37 CFR 1.33).

Office of Initial Patent Examination (571) 272-4000, or 1-800-PTO-9199
FORMER ATTORNEY/AGENT COPY

UNITED STATES PATENT AND TRADEMARK OFFICE

Commissioner for Patents
United States Patent and Trademark Office
P.O. Box 1450
Alexandria, VA 22313-1450
www.uspto.gov

ANTONELLI, TERRY, STOUT & KRAUS, LLP
1300 NORTH SEVENTEENTH STREET, SUITE 1800
ARLINGTON, VA 22209-3873

MAILED

APR 23 2009

OFFICE OF PETITIONS

In re Application of	:	
Motohiro ARIFUKU, et al.	:	
Application No. 11/074,704	:	DECISION GRANTING PETITION
Filed: March 9, 2005	:	UNDER 37 CFR 1.313(c)(2)
Attorney Docket No. **1303.41244VX2**	:	

This is a decision on the petition under 37 CFR 1.313(c)(2), filed April 22, 2009, to withdraw the above-identified application from issue after payment of the issue fee.

The petition is **GRANTED**.

The above-identified application is withdrawn from issue for consideration of a submission under 37 CFR 1.114 (request for continued examination). *See* 37 CFR 1.313(c)(2).

Petitioner is advised that the issue fee paid on March 2, 2009 cannot be refunded. If, however, this application is again allowed, petitioner may request that it be applied towards the issue fee required by the new Notice of Allowance.[1]

Telephone inquiries should be directed to the undersigned at (571) 272-7253.

This application is being referred to Technology Center AU 2826 for processing of the request for continued examination under 37 CFR 1.114 and for consideration of the concurrently filed information disclosure statement.

/Monica A. Graves/
Petitions Examiner, Office of Petitions

---

[1] *The request to apply the issue fee to the new Notice may be satisfied by completing and returning the new Part B – Fee(s) Transmittal Form (along with any balance due at the time of submission). Petitioner is advised that the Issue Fee Transmittal Form* ***must*** *be completed and timely submitted to avoid abandonment of the application.*

SPE RESPONSE FOR CERTIFICATE OF CORRECTION

Paper No.: —

DATE : 5/19/09

TO SPE OF : ART UNIT 2123

SUBJECT : Request for Certificate of Correction for Appl. No.: 11/074720 Patent No.: 7363102 B2

Please respond to this request for a certificate of correction within 7 days.

FOR IFW FILES:

Please review the requested changes/corrections as shown in the **COCIN** document(s) in the IFW application image. No new matter should be introduced, nor should the scope or meaning of the claims be changed.

Please complete the response (see below) and forward the completed response to scanning using document code **COCX**.

FOR PAPER FILES:

Please review the requested changes/corrections as shown in the attached certificate of correction. Please complete this form (see below) and forward it with the file to:

Certificates of Correction Branch (C of C)
Randolph Square 9D62-B
Palm Location 7580

Virginia Tolbert
Certificates of Correction Branch
703-756-1591

Thank You For Your Assistance

The request for issuing the above-identified correction(s) is hereby:
Note your decision on the appropriate box.

- ☒ **Approved** — **All** changes apply.
- ☐ **Approved in Part** — Specify below which changes **do not** apply.
- ☐ **Denied** — State the reasons for denial below.

Comments: _____

PAUL RODRIGUEZ
SUPERVISORY PATENT EXAMINER
TECHNOLOGY CENTER 2100
SPE

2123
Art Unit

UNITED STATES PATENT AND TRADEMARK OFFICE

Commissioner for Patents
United States Patent and Trademark Office
P.O. Box 1450
Alexandria, VA 22313-1450
www.uspto.gov

STITES & HARBISON PLLC
1199 NORTH FAIRFAX STREET
SUITE 900
ALEXANDRIA VA 22314

COPY MAILED

MAR 1 2 2008

OFFICE OF PETITIONS

In re Application of	:	
DEROSA, John L.	:	
Application No. 11/074,744	:	DECISION ON PETITION
Filed: April 09, 2005	:	TO WITHDRAW
Attorney Docket No. **P07826US02/RFH**	:	FROM RECORD
	:	

This is a decision on the Request to Withdraw as attorney or agent of record under 37 C.F.R. § 1.36(b), filed November 14, 2007.

The request is **APPROVED**.

A grantable request to withdraw as attorney/agent of record must be signed by every attorney/agent seeking to withdraw or contain a clear indication that one attorney is signing on behalf of another/others. A request to withdraw will not be approved unless at least 30 (thirty) days would remain between the date of approval and the later of the expiration date of a time to file a response or the expiration date of the maximum time period which can be extended under 37 C.F.R. § 1.136(a).

The request was signed by Ross Hunt, Jr., on behalf of all attorneys of record who are associated with customer No. 00881. All attorneys/agents associated have been withdrawn. Applicant is reminded that there is no attorney of record at this time.

All future correspondence will be directed to the inventor John Derosa at the address indicated below.

Telephone inquiries concerning this decision should be directed to Tredelle Jackson at 571-272-2783.

Tredelle D. Jackson
Petitions Examiner
Office of Petitions

cc: **JOHN DEROSA**
8507 CHURCHILL COURT
UPPER MARLBORO, MD 20772

UNITED STATES PATENT AND TRADEMARK OFFICE

Commissioner for Patents
United States Patent and Trademark Office
P.O. Box 1450
Alexandria, VA 22313-1450
www.uspto.gov

JOHN DEROSA
8507 CHURCHILL COURT
UPPER MARLBORO MD 20772

COPY MAILED
JAN 07 2009

In re Application of
John L. Derosa
Application No. 11/074,744
Filed: March 9, 2005
For: QUICK CHANGE POWER TOOL CHUCK

ON PETITION

This is a decision on the petition under the unintentional provisions of 37 CFR 1.137(b), filed November 14, 2008, to revive the above-identified application.

The petition is **DISMISSED**.

Any request for reconsideration of this decision must be submitted within TWO (2) MONTHS from the mail date of this decision. Extensions of time under 37 CFR 1.136(a) are permitted. The reconsideration request should include a cover letter entitled "Renewed Petition under 37 CFR 1.137(b)." This is **not** a final agency action within the meaning of 5 U.S.C. § 704.

The application became abandoned for failure to reply in a timely manner to the Notice mailed November 27, 2007.

A grantable petition under 37 CFR 1.137(b) must be accompanied by: (1) the required reply, unless previously filed; (2) the petition fee as set forth in 37 CFR 1.17(m); (3) a statement that the entire delay in filing the required reply from the due date for the reply until the filing of a grantable petition pursuant to 37 CFR 1.137(b) was unintentional; and (4) any terminal disclaimer (and fee as set forth in 37 CFR 1.20(d)) required by 37 CFR 1.137(d). Where there is a question as to whether either the abandonment or the delay in filing a petition under 37 CFR 1.137 was unintentional, the Director may require additional information. See MPEP 711.03(c)(II)(C) and (D). The instant petition lacks item(s) (1).

The amendment submitted with the petition on November 14, 2008 is unsigned. See 37 CFR 1.33(a).

Further correspondence with respect to this matter should be addressed as follows:

By Mail: Mail Stop PETITION
Commissioner for Patents
P. O. Box 1450
Alexandria, VA 22313-1450

By hand: U. S. Patent and Trademark Office
Customer Service Window, Mail Stop Petitions
Randolph Building
401 Dulany Street
Alexandria, VA 22314

The centralized facsimile number is **(571) 273-8300.**

Telephone inquiries concerning this decision should be directed to the undersigned at (571) 272-3208.

Karen Creasy

Karen Creasy
Petitions Examiner
Office of Petitions

Notice of Non-Compliant Amendment (37 CFR 1.121)	Application No. 11/074,744	Applicant(s) DEROSA, JOHN L.
		Art Unit 3722

-- The MAILING DATE of this communication appears on the cover sheet with the correspondence address --

The amendment document filed on 21 November, 2007 is considered non-compliant because it has failed to meet the requirements of 37 CFR 1.121 or 1.4. In order for the amendment document to be compliant, correction of the following item(s) is required.

THE FOLLOWING MARKED (X) ITEM(S) CAUSE THE AMENDMENT DOCUMENT TO BE NON-COMPLIANT:

☒ 1. Amendments to the specification:
- ☒ A. Amended paragraph(s) do not include markings.
- ☐ B. New paragraph(s) should not be underlined.
- ☐ C. Other _____.

☐ 2. Abstract:
- ☐ A. Not presented on a separate sheet. 37 CFR 1.72.
- ☐ B. Other _____.

☒ 3. Amendments to the drawings:
- ☒ A. The drawings are not properly identified in the top margin as "Replacement Sheet," "New Sheet," or "Annotated Sheet" as required by 37 CFR 1.121(d).
- ☐ B. The practice of submitting proposed drawing correction has been eliminated. Replacement drawings showing amended figures, without markings, in compliance with 37 CFR 1.84 are required.
- ☐ C. Other _____.

☒ 4. Amendments to the claims:
- ☒ A. A complete listing of all of the claims is not present.
- ☐ B. The listing of claims does not include the text of all pending claims (including withdrawn claims)
- ☐ C. Each claim has not been provided with the proper status identifier, and as such, the individual status of each claim cannot be identified. Note: the status of every claim must be indicated after its claim number by using one of the following status identifiers: (Original), (Currently amended), (Canceled), (Previously presented), (New), (Not entered), (Withdrawn) and (Withdrawn-currently amended).
- ☐ D. The claims of this amendment paper have not been presented in ascending numerical order.
- ☐ E. Other: _____.

☐ 5. Other (e.g., the amendment is unsigned or not signed in accordance with 37 CFR 1.4): For further explanation of the amendment format required by 37 CFR 1.121, see MPEP § 714.

TIME PERIODS FOR FILING A REPLY TO THIS NOTICE:

1. Applicant is given **no new time period** if the non-compliant amendment is an after-final amendment or an amendment filed after allowance, or a drawing submission (only) If applicant wishes to resubmit the non-compliant after-final amendment with corrections, the **entire corrected amendment** must be resubmitted.

2. Applicant is given **one month**, or thirty (30) days, whichever is longer, from the mail date of this notice to supply the correction, if the non-compliant amendment is one of the following: a preliminary amendment, a non-final amendment (including a submission for a request for continued examination (RCE) under 37 CFR 1.114), a supplemental amendment filed within a suspension period under 37 CFR 1.103(a) or (c), and an amendment filed in response to a Quayle action. If any of above boxes 1 to 4 are checked, the correction required is only the corrected section of the non-compliant amendment in compliance with 37 CFR 1.121.

Extensions of time are available under 37 CFR 1.136(a) only if the non-compliant amendment is a non-final amendment or an amendment filed in response to a *Quayle* action.

Failure to timely respond to this notice will result in:

Abandonment of the application if the non-compliant amendment is a non-final amendment or an amendment filed in response to a *Quayle* action; or

Non-entry of the amendment if the non-compliant amendment is a preliminary amendment or supplemental amendment.

Legal Instruments Examiner (LIE), if applicable BREWER DAWN Telephone No: 5712724331

REMARKS

Upon entry of the present amendments to the Specifications and Claims, paragraphs [0001], [0041], [0051], and [0055] in the Specifications have been amended along with Claim 3 and Claim 7, herein, and are pending this application. Claims 3-10 and new Claims 21-24 are also pending in the current application. Claims 2, 12 and 16-20 were previously canceled and Claims 1, 11 and 13-15 are canceled herein. A new drawing, Figure 9, has been also been submitted. Applicant submits that no new matter has been introduced by the present amendment, and that support for these amendments may be found throughout the specifications and drawings of this application.

SUMMARY

Applicant respectfully request allowance of all pending claims of the present application. The Examiner is invited to contact the undersigned by telephone with any questions or outstanding issues associated with the application.

Respectfully submitted,

John L. DeRosa
Applicant, Pro Se
301-868-8359

Attachment: New Drawing (Fig.9)

NEW SHEET

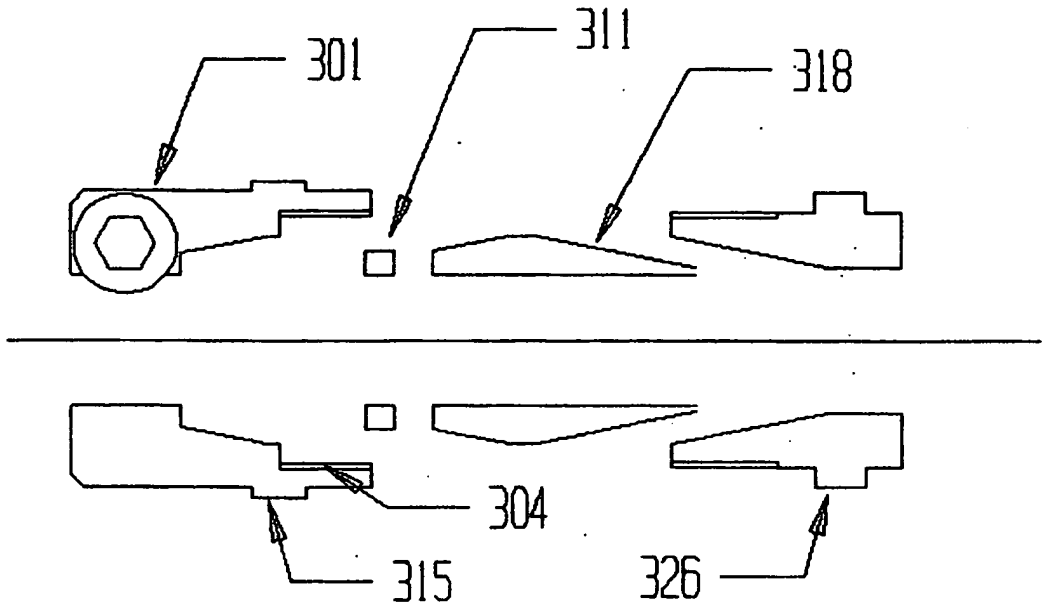

FIG. 9

UNITED STATES PATENT AND TRADEMARK OFFICE

Commissioner for Patents
United States Patent and Trademark Office
P.O. Box 1450
Alexandria, VA 22313-1450
www.uspto.gov

JOHN DEROSA
8507 CHURCHILL COURT
UPPER MARLBORO MD 20772

MAILED

APR 14 2009

OFFICE OF PETITIONS

In re Application of
John L. DeRosa
Application No. 11/074,744
Filed: March 9, 2005
For: QUICK CHANGE POWER TOOL CHUCK

DECISION ON PETITION

This is a decision on the renewed petition under the unintentional provisions of 37 CFR 1.137(b), filed January 22, 2009 and supplemented on March 31, 2009, to revive the above-identified application.

The petition is **GRANTED**.

The petition satisfies the conditions for revival pursuant to the provisions of 37 CFR 1.137(b) in that (1) the reply in the form of an amendment; (2) the petition fee; and (3) the required statement of unintentional delay have been received. Accordingly, the reply received January 22, 2009, is accepted as having been unintentionally delayed.

Telephone inquiries concerning this decision should be directed to the undersigned at (571) 272-3208.

This application is being referred to Technology Center AU 3726 for appropriate action by the Examiner in the normal course of business on the reply received January 22, 2009.

Karen Creasy

Karen Creasy
Petitions Examiner
Office of Petitions

UNITED STATES PATENT AND TRADEMARK OFFICE

Commissioner for Patents
United States Patent and Trademark Office
P.O. Box 1450
Alexandria, VA 22313-1450
www.uspto.gov

MAILED

MAR 17 2010

OFFICE OF PETITIONS

Neil F Markva
8322-A Traford Lane
Springfield, VA 22152

In re Application of	:	
John L. DeRosa	:	
Application No. 11/074,744	:	DECISION ON PETITION
Filed: March 9, 2005	:	UNDER 37 CFR 1.181
Title: QUICK CHANGE POWER TOOL	:	
CHUCK	:	

This is a decision on the petition, filed September 11, 2009 and supplemented September 14, 2009, which is being treated as a petition under 37 CFR 1.181 asking the Director to exercise his supervisory authority and declare the applicant the owner of his invention.

The Decision results in the revocation of the power of attorney to the practitioners associated with Customer Number 77178 and the appointment of practitioner Neil F. Markva.

No further revocations of power of attorney will be permitted by assignee J.P. Walsh & J.L. Marmo Enterprises, Inc. (Marmo) based on the 37 CFR 3.71 statements (information) currently of record.

History of Power of Attorney

The instant application was filed on March 9, 2005 with an executed 37 CFR 1.63 declaration naming John L. DeRosa as the sole inventor and appointing the registered practitioners of LARSON & TAYLOR, PLC associated with Customer Number 00881 to prosecute the application. The application was then prosecuted on behalf of applicant John L. DeRosa (DeRosa) without the intervention of an assignee.

In papers mailed March 7, 2008 and March 12, 2008, the practitioners associated with Customer Number 00881 were permitted to withdraw from the prosecution of this application. The correspondence address was changed to John DeRosa, 8507 Churchill Court, Upper Marlboro, Maryland 20772. DeRosa then prosecuted the application *pro se*.

An assignment document purporting to assign the application from DeRosa to Marmo was recorded on June 2, 2009. On July 9, 2009, Marmo acted as assignee under 37 CFR 3.71 and appointed the practitioners associated with the Customer Number 77176 to prosecute the application on behalf of Marmo. This power of attorney was accompanied by a statement under 37 CFR 3.73(b) referencing the document recorded on June 2, 2009. A July 28, 2009 Notice of

Acceptance of Power of Attorney accepted the July 9, 2009 appointment and the correspondence address was changed to that associated with customer number 77176.

The instant petition was filed on September 11, 2009 and supplemented September 14, 2009 by attorney Neil F. Markva (Markva), registration number 24,376, on behalf of DeRosa. The petition was accompanied by a revocation of all previous powers of attorney and an appointment of Markva, which appointment was signed by applicant DeRosa.

Decision on Ownership

The instant petition seeks to have the Office determine the proper owner of the instant application to be DeRosa in the face of a conflicting assignment executed by DeRosa to Marmo. The contract recorded by Marmo apparently has DeRosa assigning his Router Chuck invention, including "improvements thereto." DeRosa asserts that the contract recorded by Marmo does not apply to the instant application since the invention disclosed in this application is not an "improvement" to the previously assigned invention but is an entirely different invention.

Petitioner should note that the Office simply acts in a ministerial capacity in recording the assignment to Marmo that had been submitted for recordation against the instant application. See 35 USC 261 and 37 CFR 3.11. Therefore, the recording of the assignment pursuant to § 3.11 was not a determination by the Office of the validity of the assignment per se or the effect that an assignment has on title to the instant application. What is sought in essence is to have the Office make a determination of ownership from the proffered document and argument, and settle any dispute as to the title of the application. However, the Office is not an expert in state contract law. Accordingly, it is well settled that the Office is not the appropriate forum for resolving a dispute concerning ownership (title) of an application, and the Office will not permit itself to become embroiled in such ownership disputes. Rather, state law governs contractual obligations and transfers of property rights, including those relating to patents. See Regents of the University of New Mexico, v. Knight, 66 USPQ2d 1001, 1008 (Fed. Cir. 2003). The USPTO cannot settle disputes as to title as a judicial tribunal is the appropriate forum to resolve such controversy. See Jim Arnold Corp. v. Hydrotech Sys., Inc., 109 F.3d 1567, 1572,42 USPQ2d 1119, 1123 (Fed. Cir. 1997)("the question of who owns the patent right and on what terms typically is a question exclusively for state courts"); Roach v. Crouch, 24 N.W.2d 400,33 USPQ2d 1361 (Iowa 1994) (patent ownership issue properly triable in state court); In re Haines, 1900 C.D. 102, 103 (Comm'r Pat. 1900). In fact, the Office has no authority to decide ownership issues. See Cedars- Sinai Medical Center V. Watkins, 11 F.3d. 1573, 1581 n. 10,29 USPQ2d 1188, 1194 n. 10 (Fed. Cir. 1993), cert denied, 114 S. Ct. (1994).

Decision on Conflicting Assertions of Ownership

While the Office cannot determine the actual ownership of the instant application, the Office will determine who may have power of attorney as an ancillary matter to its obligation to conduct prosecution of the application. As indicated in MPEP 324 IX concerning conflicting assertions of ownership, generally, **the ownership entity that filed that application** will be permitted to

conduct the prosecution, and the other party that submitted a 37 CFR 3.73(b) statement to establish its ownership may wish to consider filing an application under 37 CFR 1.47.

The instant application was filed with the sole inventor, DeRosa, providing a power of attorney to the practitioners of LARSON & TAYLOR, PLC associated with Customer Number 00881. Power of attorney was not established via an assignee. Therefore, the ownership entity filing the instant application was the sole inventor DeRosa. Accordingly, DeRosa, will be allowed to accord power of attorney on behalf of practitioner Markva, as set forth in the power of attorney document filed September 14, 2009. Any prior acceptance of power of attorney by Marmo in this application is hereby vacated. Marmo may wish to consider filing an application under 37 CFR 1.47.

A copy of this decision is being mailed to the party from which power of attorney is being withdrawn.

Telephone inquiries concerning this decision should be directed to the undersigned at (571) 272-6692.

Christopher Bottorff
Petitions Examiner
Office of Petitions

cc: Novak, Druce & Quigg LLP
1300 I Street, N.W.
Suite 1000, West Tower
WASHINGTON DC 20005

UNITED STATES PATENT AND TRADEMARK OFFICE

Commissioner for Patents
United States Patent and Trademark Office
P.O. Box 1450
Alexandria, VA 22313-1450
www.uspto.gov

FOLEY AND LARDNER LLP
SUITE 500
3000 K STREET NW
WASHINGTON DC 20007

MAILED

JUL 07 2009

OFFICE OF PETITIONS

In re Patent No. 7,481,427	:
AKIHITO TOKUTSU	:
Issue Date: January 27, 2009	: DECISION ON REQUEST FOR
Application No. 11/074,749	: RECONSIDERATION OF
Filed: March 9, 2005	: PATENT TERM ADJUSTMENT
Attorney Docket No. 065905-0352	:

This is in response to the "REQUEST FOR RECONSIDERATION OF PATENT TERM ADJUSTMENT UNDER 37 CFR §1.705(d)", filed March 10, 2009. Patentees request that the determination of patent term adjustment for the above-identified patent be corrected from five hundred ninety-one (591) days to nine hundred four (904) days.

The request for reconsideration of patent term adjustment is **DISMISSED** with respect to making any change in the patent term adjustment determination under 35 U.S.C. 154(b) of 591 days.

On January 27, 2009, the above-identified application matured into U.S. Patent No. 7,481,427 with a revised patent term adjustment of 591 days. The Office determined that the 324 days[1] of Office delay, pursuant to 35 U.S.C. 154(b)(1)(B) and 37 CFR 1.702(b),[2] overlap with the 591 days of Office delay,[3] pursuant

[1] As of the issuance of the patent on January 27, 2008, the application was pending three years and 324 days.

[2] Pursuant to 35 U.S.C. 154(b)(1)(B), 37 CFR 1.702(b) provides, in pertinent part, that:

Failure to issue a patent within three years of the actual filing date of the application. Subject to the provisions of 35 U.S.C. 154(b) and this subpart, the term of an original patent shall be adjusted if the issuance of

to 35 U.S.C. 154(b)(1)(A) and 37 CFR 1.702(a)(1) and (2),[4] accorded during the pendency of the application. As such, the Office allowed entry of only the period of adjustment of 591 days. No additional days of patent term adjustment were entered at issuance under the three-year pendency provision. Given the 0 days of applicant delay, the patent issued with a revised patent term adjustment of 591 days.

On March 10, 2009, patentees timely submitted this request for reconsideration of patent term adjustment within two months of the issue date of the patent. See 37 CFR 1.705(d). Patentees aver that the correct number of days of Patent Term Adjustment is 904 days under the court's interpretation of the overlap provision as set forth in Wyeth v. Dudas, 580 F. Supp. 2d 138, 88 U.S.P.Q. 2d 1538 (D.D.C. 2008). Patentees assert that pursuant to Wyeth, a PTO delay under 35 U.S.C. 154(b)(1)(A) overlaps with a delay under 35 U.S.C. 154(b)(1)(B) only if the delays "occur on the same day." Patentees contend that the

---

the patent was delayed due to the failure of the Office to issue a patent within three years after the date on which the application was filed under 35 U.S.C. 111(a) or the national stage commenced under 35 U.S.C. 371(b) or (f) in an international application, but not including:

(i) any time consumed by continued examination of the application requested by the applicant under section 132(b).

[3] A nonfinal Office action was mailed on December 10, 2007, 14 months and 580 days after the application was filed on March 9, 2005. Additionally, the Office did not respond to the reply of March 3, 2008, until July 14, 2008, 4 months and 11 days after the date on which the reply was filed.

[4] 37 CFR 1.702, provides grounds for adjustment of patent term due to examination delay under the Patent Term Guarantee Act of 1999 (original applications, other than designs, filed on or after May 29, 2000).

> (a) Failure to take certain actions within specified time frames. Subject to the provisions of 35 U.S.C. 154(b) and this subpart, the term of an original patent shall be adjusted if the issuance of the patent was delayed due to the failure of the Office to:
>
> (1) Mail at least one of a notification under 35 U.S.C. 132 or a notice of allowance under 35 U.S.C. 151 not later than fourteen months after the date on which the application was filed under 35 U.S.C. 111(a) or fulfilled the requirements of 35 U.S.C. 371 in an international application;
>
> (2) Respond to a reply under 35 U.S.C. 132 or to an appeal taken under 35 U.S.C. 134 not later than four months after the date on which the reply was filed or the appeal was taken[.]

periods of delay attributable to grounds specified under 35 U.S.C. 154(b)(1)(A) and (B) overlap by 11 days as they occur on the same calendar days in both period. It appears that patentees contend that this overlapping period is the 11 days running from July 4, 2008 to July 14, 2008. Patentees maintain that the total non-overlapping PTO delay under 35 U.S.C. 154(b)(1)(A) and (B) is 904 (580 + 324) days as these periods do not occur on the same days. Given the 0 days of applicant delay and 11 days of overlap, patentees assert entitlement to 904 days of patent term adjustment.

Patentees' interpretation of the period of overlap has been considered, but found inconsistent with the Office's interpretation of the overlap provision, 35 U.S.C. 154(b)(2)(A). 35 U.S.C. 154(b)(2)(A) limits the adjustment of patent term, as follows:

> to the extent that the periods of delay attributable to grounds specified in paragraph (1) overlap, the period of any adjustment granted under this subsection shall not exceed the actual number of days the issuance of the patent was delayed.

As explained in *Explanation of 37 CFR 1.703(f)*[5] *and of the United States Patent and Trademark Office Interpretation of 35 U.S.C. 154(b)(2)(A)*, 69 Fed. Reg. 34283 (June 21, 2004), the Office interprets 35 U.S.C. 154(b)(2)(A) as permitting either patent term adjustment under 35 U.S.C. 154(b)(1)(A)(i)-(iv), or patent term adjustment under 35 U.S.C. 154(b)(1)(B), but not as permitting patent term adjustment under both 35 U.S.C. 154(b)(1)(A)(i)-(iv) and 154(b)(1)(B). Accordingly, the Office implements the overlap provision as follows:

> If an application is entitled to an adjustment under 35 U.S.C. 154(b)(1)(B), the entire period during which the application was pending (except for periods excluded under 35 U.S.C. 154(b)(1)(B)(i)-(iii)), and not just the period

---

[5] Likewise, 37 CFR 1.703(f) provides that:

> To the extent that periods of delay attributable to the grounds specified in §1.702 overlap, the period of adjustment granted under this section shall not exceed the actual number of days the issuance of the patent was delayed.

> beginning three years after the actual filing date of the application, is the period of delay under 35 U.S.C. 154(b)(1)(B) in determining whether periods of delay overlap under 35 U.S.C. 154(b)(2)(A). Thus, any days of delay for Office issuance of the patent more than 3 years after the filing date of the application, which overlap with the days of patent term adjustment accorded prior to the issuance of the patent will not result in any additional patent term adjustment. See 35 U.S.C. 154(b)(1)(B), 35 U.S.C. 154(b)(2)(A), and 37 CFR § 1.703(f). See *Changes to Implement Patent Term Adjustment Under Twenty Year Term; Final Rule*, 65 Fed. Reg. 54366 (Sept. 18, 2000). See also *Revision of Patent Term Extension and Patent Term Adjustment Provisions; Final Rule*, 69 Fed. Reg. 21704 (April 22, 2004), 1282 Off. Gaz. Pat. Office 100 (May 18, 2004). See also *Explanation of 37 CFR 1.703(f) and of the United States Patent and Trademark Office Interpretation of 35 U.S.C. 154(b)(2)(A)*, 69 Fed. Reg. 34283 (June 21, 2004).

Further, as stated in the *Explanation of 37 CFR 1.703(f) and of the United States Patent and Trademark Office Interpretation of 35 U.S.C. 154(b)(2)(A)*, the Office has consistently taken the position that if an application is entitled to an adjustment under the three-year pendency provision of 35 U.S.C. 154(b)(1)(B), the entire period during which the application was pending before the Office (except for periods excluded under 35 U.S.C. 154(b)(1)(B)(i)-(iii)), and not just the period beginning three years after the actual filing date of the application, is the relevant period under 35 U.S.C. 154(b)(1)(B) in determining whether periods of delay "overlap" under 35 U.S.C. 154(b)(2)(A).

This interpretation is consistent with the statute. Taken together the statute and rule provide that to the extent that periods of delay attributable to grounds specified in 35 U.S.C. 154(b)(1) and in corresponding § 1.702 overlap, the period of adjustment granted shall not exceed the actual number of days the issuance of the patent was delayed.

In this instance, the relevant period under 35 U.S.C. 154(b)(1)(B) in determining whether periods of delay "overlap" under 35 U.S.C. 154(b)(2)(A) is the period during which the application was pending before the Office beginning on the date of filing of the application under 35 U.S.C. 111(a) on March 9,

2005, and ending on the date of issuance of the patent on January 27, 2009 (not including any other periods excluded under 35 U.S.C. 154(b)(1)(B)(i)-(iii)).

Pursuant to 35 U.S.C. 154(b)(1)(A) and 37 CFR 1.702(a)(1) and (2), 591 days of patent term adjustment were accorded during the pendency of the application for Office delay prior to the issuance of the patent. Pursuant to 35 U.S.C. 154(b)(1)(B) and 37 CFR 1.702(b), 324 days of patent term adjustment accrued for Office issuance of the patent more than three years after the filing date of the application.

All of the 324 days of patent term adjustment under 37 CFR 1.702(b) overlap with the 591 days of patent term adjustment under 37 CFR 1.702(a)(1) and (2). Entry of both the 324 days and the 591 days is neither permitted nor warranted. 591 days is the actual number of days issuance of the patent was delayed.

Accordingly, at issuance, the Office properly entered no additional days of patent term adjustment, having considered the 324 days of Office delay under the three-year pendency provision.

In view thereof, the Office affirms that the revised determination of patent term adjustment at the time of the issuance of the patent is 591 days.

The Office acknowledges submission of the $200.00 fee set forth in 37 CFR 1.18(e). No additional fees are required.

Telephone inquiries specific to this matter should be directed to the undersigned at (571) 272-3211.

Christina T. Donnell

Christina Tartera Donnell
Senior Petitions Attorney
Office of Petitions

UNITED STATES PATENT AND TRADEMARK OFFICE

Commissioner for Patents
United States Patent and Trademark Office
P.O. Box 1450
Alexandria, VA 22313-1450
www.uspto.gov

NOV 21 2005

RONALD E. GREIGG
GREIGG & GREIGG P.L.L.C.
1423 POWHATAN STREET, UNIT ONE
ALEXANDRIA VA 22314

In re Application of	:
May et al.	:
Serial No.: 11/074,757	: PETITION TO MAKE SPECIAL
Filed: March 9, 2005	:
Attorney Docket No.: (05:27)	:

This is in response to applicants' petition filed October 31, 2005, to make the above-identified application special under the provisions of 37 CFR 1.102(d), based on inventions relating to the cancer. The $130.00 petition fee as required by 37 CFR 1.17(h) was charged to applicants' Deposit Account No. 07-2100, as authorized.

Applicants have satisfied the provisions set forth in M.P.E.P. 708.02, X. Therefore, the petition is **GRANTED**.

The application will be forwarded to the examiner for action on the merits commensurate with this decision.

Should there be any questions with regard to this letter please contact Marianne C. Seidel by letter addressed to the Director, Technology Center 1600, P.O. Box 1450, Alexandria, VA 22313-1450, or by telephone at 571-272-0584 or by facsimile transmission at the general Office facsimile number, (703) 872-9306.

Marianne C. Seidel
Special Program Examiner
Technology Center 1600

UNITED STATES PATENT AND TRADEMARK OFFICE

Commissioner for Patents
United States Patent and Trademark Office
P.O. Box 1450
Alexandria, VA 22313-1450
www.uspto.gov

COPY MAILED
NOV 17 2006
OFFICE OF PETITIONS

RONALD E. GREIGG
GREIGG & GREIGG PLLC
1423 POWHATAN STREET, UNIT ONE
ALEXANDRIA, VA 22314

In re Application of	:	
Michael G. May and Flavia S. May	:	
Application No. 11/074,757	:	DECISION ON PETITION
Filed: March 9, 2005	:	
Attorney Docket No. 05 :27	:	

This is a decision on the petition under 37 CFR 1.182, filed March 8, 2006, to change the order of the names of the inventors.

The petition is **GRANTED**.

Office records have been corrected to reflect the change in the order of the named inventors. A corrected Filing Receipt, which sets forth the desired order of the named inventors, has been mailed under separate cover.

Petitioner is encouraged to submit an application data sheet showing the new order of the inventors' names to ensure appropriate printing of the inventors' names in any patent which may issue from this application. *Note* MPEP 605.04(f).

As authorized, the $400 fee for the petition under 37 CFR 1.182 has been assessed to petitioner's deposit account.

This application is being referred to Technology Center AU 1632 for examination in due course.

Telephone inquiries regarding this decision should be directed to the undersigned at (571) 272-3218.

Frances Hicks
Petitions Examiner
Office of Petitions

UNITED STATES PATENT AND TRADEMARK OFFICE

Commissioner for Patents
United States Patent and Trademark Office
P.O. Box 1450
Alexandria, VA 22313-1450
www.uspto.gov

MAIL

JUN 2 0 2005

DIRECTOR OFFICE
TECHNOLOGY CENTER 2600

OBLON, SPIVAK, MCCLELLAND, MAIER &
NEUSTADT, P.C.
1940 DUKE STREET
ALEXANDRIA, VA 22314

In re Application of :
Hidetake ITOH, et al. :
Application No. 11/074,762 :
Filed: March 9, 2005 :
For: **METHOD OF EVALUATING OPTICAL INFORMATION MEDIUM** :

DECISION ON PETITION
TO MAKE SPECIAL

This is a decision on the petition filed May 26, 2005 under Manual of Patent Examination Procedure §708.02,VIII requesting accelerated examination.

The petition under Manual of Patent Examination Procedure §708.02, VIII, must:
(1) be filed prior to receiving any examination by the examiner,
(2) be accompanied by the required fee- $130,
(3) the claims should be directed to a single invention (if it is determined that the claims pertain to more than one invention, then applicant will have to make an election without traverse or forfeit accelerated examination status),
(4) state that a pre-examination search was made, and fully discuss the search method employed, such as classes and subclasses searched, publications, Chemical abstracts, patents, etc. A search made by a foreign patent office satisfies this requirement,
(5) be accompanied by a copy of each of the references most closely related to the subject matter encompassed by the claims if said references are not already of record,
(6) fully discuss the references, pointing out with the particularity required by 37 C.F.R. §1.111 (b) and (c), how the claimed subject matter is patentable over the references.

The petitioner meets all the above-listed requirements. Accordingly, the petition is **GRANTED**.

The application will retain its special status throughout its entire prosecution, including any appeal to the Board of Patent Appeals and Interferences, subject only to diligent prosecution by the applicant. The application file is being forwarded to the examiner for appropriate action in due course.

Doris To
Special Program Examiner
Technology Center 2600
Communications

UNITED STATES PATENT AND TRADEMARK OFFICE

UNITED STATES DEPARTMENT OF COMMERCE
United States Patent and Trademark Office
Address: COMMISSIONER FOR PATENTS
P.O. Box 1450
Alexandria, Virginia 22313-1450
www.uspto.gov

OBLON, SPIVAK, MCCLELLAND MAIER & NEUSTADT, L.L.P.
1940 DUKE STREET
ALEXANDRIA, VA 22314

Mail Date: 04/20/2010

Applicant	: Junji Nakamura	: DECISION ON REQUEST FOR
Patent Number	: 7604013	: RECALCULATION of PATENT
Issue Date	: 10/20/2009	: TERM ADJUSTMENT IN VIEW
Appliction No	: 11/074,781	: OF WYETH AND NOTICE OF INTENT TO
Filed	: 03/09/2005	: ISSUE CERTIFICATE OF CORRECTION
		:

The Request for Recalculation is **GRANTED** to the extent indicated.

The patent term adjustment has been determined to be **667** days. The USPTO will *sua sponte* issue a certificate of correction reflecting the amount of PTA days determined by the recalculation.

Prior to the issuance of the certificate of correction, the USPTO will afford patentee an opportunity to be heard and request reconsideration. Accordingly, patentee has **one month or thirty (30) days**, whichever is longer, to file a request for reconsideration of this patent term adjustment calculation. See 35 U.S.C. 154(b)(3)(B)(ii) and 37 CFR 1.322(a)(4). No extensions of time will be granted under 37 CFR 1.136.

Patentee should use document code PET.OP if electronically filing a request for reconsideration of this patent term adjustment calculation. The patentee must also include the information required by 37 CFR 1.705(b)(2) and the fee required by 37 CFR 1.18(e). If patentee does not file a timely request for reconsideration of this patent term adjustment calculation including the information required by 37 CFR 1.705(b)(2) and the fee required by 37 CFR 1.18(e), the USPTO will issue a certificate of correction reflecting the PTA determination noted above.

Patentee should be aware that in order to preserve the right to review in the United States District Court for the District of Columbia of the USPTO patent term adjustment determination, patentee must ensure that he or she also take the steps required under 35 U.S.C. 154(b)(4)(A) in a timely manner. Nothing in the request for recalculation should be construed as providing an alternative time frame for commencing a civil action under 35 U.S.C. 154(b)(4)(A).

Any questions concerning this decision should be directed to the Office of Patent Legal Administration at 571-272-7702.

UNITED STATES PATENT AND TRADEMARK OFFICE

UNITED STATES DEPARTMENT OF COMMERCE
United States Patent and Trademark Office
Address: COMMISSIONER FOR PATENTS
P.O. Box 1450
Alexandria, Virginia 22313-1450
www.uspto.gov

OBLON, SPIVAK, MCCLELLAND MAIER & NEUSTADT, L.L.P.
1940 DUKE STREET
ALEXANDRIA, VA 22314

Mail Date: 05/17/2010

Applicant : Junji Nakamura
Patent Number : 7604013
Issue Date : 10/20/2009
Application No : 11/074,781
Filed : 03/09/2005

: NOTICE CONCERNING IMPROPER
: CALCULATION OF PATENT TERM
: ADJUSTMENT BASED UPON USPTO
: IMPROPERLY MEASURING REDUCTION
: PERIOD UNDER 37 CFR 1.704(c)(10).

The United States Patent and Trademark Office (USPTO) discovered that in processing the recent recalculation decisions mailed in response to patentee's filed Request for Recalculation of Patent Term Adjustment in view of Wyeth, the USPTO improperly measured the reduction period for reductions under 37 CFR 1.704(c)(10). Pursuant to 37 CFR 1.704(c)(10), patentee's reduction begins on the date of filing the amendment under 37 CFR 1.312 ("1.312 amendment") or other related paper and ends on the date that the Office mails a response to the filing of the 1.312 amendment or other paper. It has been discovered that during the recalculation, the calculation failed to the limit the reduction to the mail date of the response to the 1.312 amendment or other paper. Accordingly, patentee's reductions were greater than warranted.

This notice **VACATES** the previous GRANTED request for recalculation and provides patentee with a revised GRANTED recalculation.

The patent term adjustment has been determined to be **696** days. The USPTO will *sua sponte* issue a certificate of correction reflecting the amount of patent term adjustment (PTA) days determined by the recalculation.

Prior to the issuance of the certificate of correction, the USPTO will afford patentee an opportunity to be heard and request reconsideration. Accordingly, patentee has **one month or thirty (30) days** from the mail date of this notice, whichever is longer, to file a request for reconsideration of this PTA calculation. See 35 U.S.C. § 154(b)(3)(B)(ii) and 37 CFR 1.322(a)(4).

Patentee should use document code PET.OP if electronically filing a request for reconsideration of this PTA calculation. The patentee must also include the information required by 37 CFR 1.705(b)(2), and the fee required by 37 CFR 1.18(e). If patentee does not file a timely request for reconsideration of this PTA calculation, including the information required by 37 CFR 1.705(b)(2) and the fee required by 37 CFR 1.18(e), the USPTO will issue a certificate of correction reflecting the PTA determination noted above.

Patentee should be aware that in order to preserve the right of review of the USPTO's PTA determination in the United States District Court for the District of Columbia, patentee must ensure that the steps required under 35 U.S.C. § 154 (b)(4) are taken in a timely manner. Nothing in the request for recalculation should be construed as providing an alternative time frame for commencing a civil action under 35 U.S.C. § 154(b)(4).

UNITED STATES PATENT AND TRADEMARK OFFICE

Commissioner for Patents
United States Patent and Trademark Office
P.O. Box 1450
Alexandria, VA 22313-1450
www.uspto.gov

MAY 0 6 2009

Dimock Stratton, LLP
20 Queen Street West
Suite 3202, Box 102
Toronto, ON M5H 3R3, Canada

In re application of Alven J. Way Application No. 11/074,788 Filed: March 9, 2005 For: MULTI-STOREY INSULATED FOAM BUILDING	: : : :	**DECISION ON PETITION TO RESET THE PERIOD FOR RESPONSE**

This is in reply to the Petition to Reset a Period for Reply of an Office action, received in the Patent and Trademark Office on April 21, 2009. There is no fee required for this petition.

The petition is **DISMISSED as MOOT**.

A review of the file record reveals that on January 31, 2008, a Change in Power of Attorney was filed. The correspondence address was changed to the correspondence address of this decision, above. On November 18, 2008, a Requirement for Restriction was mistakenly mailed to the previous attorney of record at the old correspondence address. Apparently, at some point the Office realized it's mistake (a Miscellaneous paper filed by the applicant on March 11, 2009 is a likely cause) and re-mailed the Restriction Requirement to the correct correspondence of record and restarted the response period. Since the relief requested has already previously been provided with the re-mailing of the above action on April 10, 2009 the petition is **DISMISSED as MOOT**.

The time for responding to the remailed Requirement for Restriction continues to run from the April 10, 2009 mailing date.

The petition also asks for the Commissioner to consider a patent term adjustment. Such a request is seen as being premature. Upon allowance of the application the Office will make a determination of any appropriate patent term adjustment. If applicant disagrees with the determination applicant may request reconsideration under 37 CFR 1.705.

Telephone inquiries relative to this decision should be directed to Special Programs Examiner Steven Meyers at (571) 272-6611.

Katherine Matecki

Katherine Matecki, Director
Patent Technology Center 3600
(571) 272-5250

SM/SM; 4/30/09

SM

UNITED STATES PATENT AND TRADEMARK OFFICE

Commissioner for Patents
United States Patent and Trademark Office
P.O. Box 1450
Alexandria, VA 22313-1450
www.uspto.gov

PROSKAUER ROSE LLP
One International Place
Boston MA 02110

MAILED

JUL 14 2010

OFFICE OF PETITIONS

In re Application of
Thomas O. Bales, et al.
Application No. 11/074,806
Filed: March 8, 2005
Attorney Docket No. 14673-141CONT

DECISION ON PETITION
TO WITHDRAW
FROM RECORD

This is a decision on the request to withdraw as attorney of record under 37 CFR § 1.36, filed June 2, 2010.

The request is **NOT APPROVED**.

The request cannot be approved because it lacks a forwarding correspondence address of the first named inventor or a properly intervening assignee.

If the forwarding correspondence address is to the assignee, the Office will only accept correspondence address changes to the most current address information provided for the assignee of the entire interest *that properly became of record under 37 CFR 3.71.* 37 CFR 3.71(c) states:

> *An assignee becomes of record either in a national patent application or a reexamination proceeding by filing a statement in compliance with § 3.73(b) that is signed by a party who is authorized to act on behalf of the assignee.*

The assignee must establish its ownership of the patent to the satisfaction of the Director. In this regard, the statement under 37 CFR 3.73(b) must have either: (i) documentary evidence of a chain of title from the original owner to the assignee (*e.g.*, copy of an executed assignment), and a statement affirming that the documentary evidence of the chain of title from the original owner to the assignee was or concurrently is being submitted for recordation pursuant to § 3.11; or (ii) a statement specifying where documentary evidence of a chain of title from the original owner to the assignee is recorded in the assignment records of the Office (*e.g.*, reel and frame number).

All future communications from the Office will continue to be directed to the above-listed address until otherwise notified by applicant.

Telephone inquires concerning this decision should be directed to the undersigned at (571) 272-2991.

Terri Johnson
Petitions Examiner
Office of Petitions

cc: **C.R. BARD, INC.**
BARD PERIPHERAL VASCULAR, INC.
1415 W. 3RD STREET
P.O. BOX 1740
TEMPE, AZ 85280-1740

UNITED STATES PATENT AND TRADEMARK OFFICE

UNITED STATES DEPARTMENT OF COMMERCE
United States Patent and Trademark Office
Address: COMMISSIONER FOR PATENTS
P.O. Box 1450
Alexandria, Virginia 22313-1450
www.uspto.gov

APPLICATION NO.	FILING DATE	FIRST NAMED INVENTOR	ATTORNEY DOCKET NO.	CONFIRMATION NO.
11/074,812	03/08/2005	Timothy P. Blair	200405710-1	2131

7590 04/09/2008
HEWLETT PACKARD COMPANY
P O BOX 272400, 3404 E. HARMONY ROAD
INTELLECTUAL PROPERTY ADMINISTRATION
FORT COLLINS, CO 80527-2400

EXAMINER
ALMATRAHI, FARIS S

ART UNIT	PAPER NUMBER
3627	

NOTIFICATION DATE	DELIVERY MODE
04/09/2008	ELECTRONIC

DECISION GRANTING PETITION UNDER 37 CFR 1.138(d)

The declaration of express abandonment is recognized

This is in response to the petition under 37 CFR 1.138(d), requesting for a refund of any previously paid search fee and excess claims fee in the above-identified application.

The petition is granted.

The express abandonment is recognized. Any previously paid search fee and excess claims fee are hereby refunded.

Telephone inquiries should be directed to the Office of Data Management at (571) 272-4200.

Tomi Farmer

Patent Publication Branch
Office of Data Management

```
Adjustment date: 04/08/2008  KKING1
03/11/2005 HTECKLU1 00000040 082025   11074812
02 FC:1111        500.00 CR
04 FC:1202        750.00 CR
05 FC:1201       1000.00 CR
```


FORM PET651G (Rev. 08/07)

UNITED STATES PATENT AND TRADEMARK OFFICE

COMMISSIONER FOR PATENTS
UNITED STATES PATENT AND TRADEMARK OFFICE
P.O. BOX 1450
ALEXANDRIA, VA 22313-1450
www.uspto.gov

COPY MAILED

JAN 25 2008

OFFICE OF PETITIONS

YOUNG & THOMPSON
745 SOUTH 23RD STREET
2ND FLOOR
ARLINGTON, VA 22202

In re Application of
Shuichi Ono
Application No. 11/074,829
Filed: March 9, 2005
Attorney Docket No. 8044-1032

ON PETITION

This is a decision on the petition under 37 CFR 1.137(b) to revive the above-identified application, filed September 25, 2007.

The petition is **GRANTED**.

The application became abandoned for failure s to timely pay the issue and publication fees on or before September 5, 2007, as required by the Notice of Allowance and Fee(s) Due, mailed June 5, 2007, which set a statutory period for reply of three (3) months. Accordingly, the application became abandoned on September 6, 2007. On September 25, 2007, the present petition was filed. A Notice of Abandonment was subsequently mailed on October 2, 2007.

The petition satisfies the requirements of 37 CFR 1.137(b) in that petitioner has supplied (1) the reply in the form of the $1,400 issue fee and the $300 publication fee; (2) the petition fee of $1,500; and (3) an adequate statement of unintentional delay.

The application is being referred to the Office of Data Management to be processed into a patent.

Telephone inquires related to this decision should be directed to the undersigned at (571) 272-3204. Telephone inquiries related to processing as a patent should be directed to (571) 272-4200.

Sherry D. Brinkley
Petitions Examiner
Office of Petitions

11/074,851

cqe

OIPE
DEC 15 2008
PATENT & TRADEMARK OFFICE

PLEASE ENTER IT.

/Hai Nguyen/ (01/06/2009)

IN THE UNITED STATES PATENT AND TRADEMARK OFFICE

In re Patent of

KATOH Atty. Ref.: 1035-571

Patent No. 7,457,585

Issued: November 25, 2008

Certificate
DEC 17 2008
of Correction

For: HOME NETWORK SERVER, METHOD FOR DISTRIBUTING DIGITAL BROADCASTING PROGRAM, WIRELESS TERMINAL, HOME NETWORK SYSTEM

* * * * * * * * * * *

December 15, 2008

Commissioner for Patents
P.O. Box 1450
Alexandria, VA 22313-1450

Sir:

REQUEST FOR A CERTIFICATE OF CORRECTION

The patentee in the above-identified patent hereby requests that the Patent and Trademark Office issue an official Certificate of Correction to correct the following typographical error in U.S. Patent No. 7,457,585:

In claim 19, line 3, replace "data" with --signal--.

Claim 19 (corresponding to application claim 8) depends from claim 18 (corresponding to application claim 11). Claim 18 recites a second digital *signal*. The above-mentioned change to claim 19 corrects what will be readily recognized as a typographical error in claim 19 so that claim 19 correctly refers to the second digital *signal* set forth in claim 18. This amendment was discussed with Examiner Nguyen prior

DEC 17 2008

to issuance of the subject patent, but was apparently inadvertently not included in the Certificate of Correction prepared on December 2, 2008.

Attached hereto is a draft Official Certificate of Correction for use by the Patent and Trademark Office correcting the above-identified matter.

Please charge any fee associated with this Certificate of Correction to our Deposit Account No. 14-1140.Respectfully submitted,

NIXON & VANDERHYE P.C.

By: _____
Michael J. Shea
Reg. No. 34,725

MJS:dbp
901 North Glebe Road, 11th Floor
Arlington, VA 22203-1808
Telephone: (703) 816-4000
Facsimile: (703) 816-4100

DEC 17 2008

Staple Here Only!

UNITED STATES PATENT AND TRADEMARK OFFICE

CERTIFICATE OF CORRECTION

PATENT NO. : 7,457,585
DATED : November 25, 2008
INVENTOR(S) : KATOH

It is certified that error appears in the above-identified patent and that said letters patent is hereby corrected as shown below:

In Claim 19, line 3, delete "data" and insert --signal-- therefor.

MAILING ADDRESS OF SENDER:

Michael J. Shea
NIXON & VANDERHYE P.C.
901 North Glebe Road, 11th Floor
Arlington, Virginia 22201

PATENT NO. 7,457,585

No. of addl
@ 50¢ per page

Form PTO 1050 (Rev. 2-93)

DEC 17 2008

UNITED STATES PATENT AND TRADEMARK OFFICE

Commissioner for Patents
United States Patent and Trademark Office
P.O. Box 1450
Alexandria, VA 22313-1450
www.uspto.gov

COPY MAILED

MAY 1 4 2008

OFFICE OF PETITIONS

JASON ROBERTSON
4159 STECK AVE #164
AUSTIN TX 78759

In re Application of

RUSSELL, Darryl
Application No. 11/074,858
Filed: March 08, 2005
Attorney Docket No. **RD010026**

DECISION ON PETITION
TO WITHDRAW
FROM RECORD

This is a decision on the Request to Withdraw as attorney or agent of record under 37 C.F.R. § 1.36(b), filed February 29, 2008.

The request is **APPROVED**.

A grantable request to withdraw as attorney/agent of record must be signed by every attorney/agent seeking to withdraw or contain a clear indication that one attorney is signing on behalf of another/others. A request to withdraw will not be approved unless at least 30 (thirty) days would remain between the date of approval and the later of the expiration date of a time to file a response or the expiration date of the maximum time period which can be extended under 37 C.F.R. § 1.136(a).

The request was signed by Jason Robertson, the sole attorney of record. Jason Robertson has been withdrawn as attorney or agent of record. Applicant is reminded that there is no attorney of record at this time.

All future correspondence will be directed to the first named inventor Darryl Russel at the address indicated below.

Telephone inquiries concerning this decision should be directed to Tredelle Jackson at 571-272-2783.

Tredelle D. Jackson
Petitions Examiner
Office of Petitions

cc: **DARRYL RUSSELL**
4405 BKYE MIST COURT
LAS VEGAS, NV 89139

UNITED STATES PATENT AND TRADEMARK OFFICE

UNITED STATES DEPARTMENT OF COMMERCE
United States Patent and Trademark Office
Address: COMMISSIONER FOR PATENTS
P.O. Box 1450
Alexandria, Virginia 22313-1450
www.uspto.gov

DICKSTEIN SHAPIRO LLP
1825 EYE STREET NW
Washington, DC 20006-5403

Mail Date: 04/21/2010

Applicant	: Yoshiyuki Sasaki	: DECISION ON REQUEST FOR
Patent Number	: 7596063	: RECALCULATION of PATENT
Issue Date	: 09/29/2009	: TERM ADJUSTMENT IN VIEW
Appliction No	: 11/074,866	: OF WYETH AND NOTICE OF INTENT TO
Filed	: 03/09/2005	: ISSUE CERTIFICATE OF CORRECTION
		:

The Request for Recalculation is **GRANTED** to the extent indicated.

The patent term adjustment has been determined to be **1237** days. The USPTO will *sua sponte* issue a certificate of correction reflecting the amount of PTA days determined by the recalculation.

Prior to the issuance of the certificate of correction, the USPTO will afford patentee an opportunity to be heard and request reconsideration. Accordingly, patentee has **one month or thirty (30) days**, whichever is longer, to file a request for reconsideration of this patent term adjustment calculation. See 35 U.S.C. 154(b)(3)(B)(ii) and 37 CFR 1.322(a)(4). No extensions of time will be granted under 37 CFR 1.136.

Patentee should use document code PET.OP if electronically filing a request for reconsideration of this patent term adjustment calculation. The patentee must also include the information required by 37 CFR 1.705(b)(2) and the fee required by 37 CFR 1.18(e). If patentee does not file a timely request for reconsideration of this patent term adjustment calculation including the information required by 37 CFR 1.705(b)(2) and the fee required by 37 CFR 1.18(e), the USPTO will issue a certificate of correction reflecting the PTA determination noted above.

Patentee should be aware that in order to preserve the right to review in the United States District Court for the District of Columbia of the USPTO patent term adjustment determination, patentee must ensure that he or she also take the steps required under 35 U.S.C. 154(b)(4)(A) in a timely manner. Nothing in the request for recalculation should be construed as providing an alternative time frame for commencing a civil action under 35 U.S.C. 154(b)(4)(A).

Any questions concerning this decision should be directed to the Office of Patent Legal Administration at 571-272-7702.

UNITED STATES PATENT AND TRADEMARK OFFICE

UNITED STATES DEPARTMENT OF COMMERCE
United States Patent and Trademark Office
Address: COMMISSIONER FOR PATENTS
P.O. Box 1450
Alexandria, Virginia 22313-1450
www.uspto.gov

MCDERMOTT WILL & EMERY LLP
18191 VON KARMAN AVE.
SUITE 500
IRVINE, CA 92612-7108

Mail Date: 04/21/2010

Applicant	: Andrew T. Fausak	: DECISION ON REQUEST FOR
Patent Number	: 7631173	: RECALCULATION of PATENT
Issue Date	: 12/08/2009	: TERM ADJUSTMENT IN VIEW
Appliction No	: 11/074,876	: OF WYETH AND NOTICE OF INTENT TO
Filed	: 03/09/2005	: ISSUE CERTIFICATE OF CORRECTION
		:

The Request for Recalculation is **GRANTED** to the extent indicated.

The patent term adjustment has been determined to be **601** days. The USPTO will *sua sponte* issue a certificate of correction reflecting the amount of PTA days determined by the recalculation.

Prior to the issuance of the certificate of correction, the USPTO will afford patentee an opportunity to be heard and request reconsideration. Accordingly, patentee has **one month or thirty (30) days**, whichever is longer, to file a request for reconsideration of this patent term adjustment calculation. See 35 U.S.C. 154(b)(3)(B)(ii) and 37 CFR 1.322(a)(4). No extensions of time will be granted under 37 CFR 1.136.

Patentee should use document code PET.OP if electronically filing a request for reconsideration of this patent term adjustment calculation. The patentee must also include the information required by 37 CFR 1.705(b)(2) and the fee required by 37 CFR 1.18(e). If patentee does not file a timely request for reconsideration of this patent term adjustment calculation including the information required by 37 CFR 1.705(b)(2) and the fee required by 37 CFR 1.18(e), the USPTO will issue a certificate of correction reflecting the PTA determination noted above.

Patentee should be aware that in order to preserve the right to review in the United States District Court for the District of Columbia of the USPTO patent term adjustment determination, patentee must ensure that he or she also take the steps required under 35 U.S.C. 154(b)(4)(A) in a timely manner. Nothing in the request for recalculation should be construed as providing an alternative time frame for commencing a civil action under 35 U.S.C. 154(b)(4)(A).

Any questions concerning this decision should be directed to the Office of Patent Legal Administration at 571-272-7702.

UNITED STATES PATENT AND TRADEMARK OFFICE

UNITED STATES DEPARTMENT OF COMMERCE
United States Patent and Trademark Office
Address: COMMISSIONER FOR PATENTS
P.O. Box 1450
Alexandria, Virginia 22313-1450
www.uspto.gov

MCDERMOTT WILL & EMERY LLP
18191 VON KARMAN AVE.
SUITE 500
IRVINE, CA 92612-7108

Mail Date: 05/18/2010

Applicant : Andrew T. Fausak
Patent Number : 7631173
Issue Date : 12/08/2009
Application No : 11/074,876
Filed : 03/09/2005

: NOTICE CONCERNING IMPROPER
: CALCULATION OF PATENT TERM
: ADJUSTMENT BASED UPON USPTO
: IMPROPERLY MEASURING REDUCTION
: PERIOD UNDER 37 CFR 1.704(c)(10).

The United States Patent and Trademark Office (USPTO) discovered that in processing the recent recalculation decisions mailed in response to patentee's filed Request for Recalculation of Patent Term Adjustment in view of Wyeth, the USPTO improperly measured the reduction period for reductions under 37 CFR 1.704(c)(10). Pursuant to 37 CFR 1.704(c)(10), patentee's reduction begins on the date of filing the amendment under 37 CFR 1.312 ("1.312 amendment") or other related paper and ends on the date that the Office mails a response to the filing of the 1.312 amendment or other paper. It has been discovered that during the recalculation, the calculation failed to the limit the reduction to the mail date of the response to the 1.312 amendment or other paper. Accordingly, patentee's reductions were greater than warranted.

This notice **VACATES** the previous GRANTED request for recalculation and provides patentee with a revised GRANTED recalculation.

The patent term adjustment has been determined to be **650** days. The USPTO will *sua sponte* issue a certificate of correction reflecting the amount of patent term adjustment (PTA) days determined by the recalculation.

Prior to the issuance of the certificate of correction, the USPTO will afford patentee an opportunity to be heard and request reconsideration. Accordingly, patentee has **one month or thirty (30) days** from the mail date of this notice, whichever is longer, to file a request for reconsideration of this PTA calculation. See 35 U.S.C. § 154(b)(3)(B)(ii) and 37 CFR 1.322(a)(4).

Patentee should use document code PET.OP if electronically filing a request for reconsideration of this PTA calculation. The patentee must also include the information required by 37 CFR 1.705(b)(2), and the fee required by 37 CFR 1.18(e). If patentee does not file a timely request for reconsideration of this PTA calculation, including the information required by 37 CFR 1.705(b)(2) and the fee required by 37 CFR 1.18(e), the USPTO will issue a certificate of correction reflecting the PTA determination noted above.

Patentee should be aware that in order to preserve the right of review of the USPTO's PTA determination in the United States District Court for the District of Columbia, patentee must ensure that the steps required under 35 U.S.C. § 154 (b)(4) are taken in a timely manner. Nothing in the request for recalculation should be construed as providing an alternative time frame for commencing a civil action under 35 U.S.C. § 154(b)(4).

UNITED STATES PATENT AND TRADEMARK OFFICE

Commissioner for Patents
United States Patent and Trademark Office
P.O. Box 1450
Alexandria, VA 22313-1450
www.uspto.gov

WORKMAN NYDEGGER
60 EAST SOUTH TEMPLE
1000 EAGLE GATE TOWER
SALT LAKE CITY, UT 84111

COPY MAILED

MAY 12 2008

In re Application of	:	
HAYS, Jeffrey	:	
Application No. 11/074,879	:	DECISION ON PETITION
Filed: March 08, 2005	:	TO WITHDRAW
Attorney Docket No. **3351-8826US**	:	FROM RECORD

This is a decision on the Request to Withdraw as attorney or agent of record under 37 C.F.R. § 1.36(b), filed October 09, 2007.

The request is **Moot** because a revocation of power of attorney has been previously filed.

A review of the file record indicates that the power of attorney to WORKMAN NYDEGGER has been revoked by the assignee of the patent application on April 17, 2008. Accordingly, the request to withdraw under 37 C.F.R. § 1.36(b) is moot.

All future communications from the Office will continue to be directed to the below-listed address until otherwise notified by applicant.

Telephone inquires concerning this decision should be directed to Tredelle Jackson at 571-272-2783.

Tredelle D. Jackson
Petitions Examiner
Office of Petitions

cc: **TRASK BRITT**
P.O. BOX 2550
SALT LAKE CITY UT 84110

UNITED STATES PATENT AND TRADEMARK OFFICE

Commissioner for Patents
United States Patent and Trademark Office
P.O. Box 1450
Alexandria, VA 22313-1450
www.uspto.gov

MAILED

JUN 07 2010

OFFICE OF PETITIONS

TRASKBRITT, P.C.
P.O. BOX 2550
SALT LAKE CITY UT 84110

In re Application of

Hays, Jeffrey
Application No. 11/074,879
Filed: March 08, 2005
Attorney Docket No. **3351-8826US**

DECISION ON PETITION
TO WITHDRAW
FROM RECORD

This is a decision on the Request to Withdraw as attorney or agent of record under 37 C.F.R. § 1.36(b), filed May 14, 2010

The request is **NOT APPROVED**.

The Office has revised its change in procedure for request to withdraw from representation applies to requests filed on or after May 12, 2008.

The Office will no longer accept address changes to a new practitioner or law firm filed with a Request, absent the filing of a power of attorney to the new representative. The Office will either change the correspondence address of record to the most current address information provided for the assignee of the entire interest who properly became of record under 37 CFR 3.71 or, if no assignee of the entire interest has properly been made of record under 37 CFR 3.71, the most current address information provided for the first named inventor.

Accordingly, the request to withdraw from record cannot be approved because the request to change the correspondence address is not that of: (1) the first named inventor; or (2) an assignee of the entire interest under 37 C.F.R 3.71 who has properly intervened.

If an assignee has intervened in this application, then a Statement under 37 CFR 3.73(b) or a copy of the actual assignment must be submitted with a renewed request.

All future communications from the Office will continue to be directed to the above-listed address until otherwise notified by applicant.

Telephone inquiries concerning this decision should be directed to Tredelle Jackson at 571-272- 2783.

/Tredelle D. Jackson/
Paralegal Specialist
Office of Petitions

cc: **PERKINS COIE LLP**
607 FOURTEENTH STREET, NW
WASHINGTON, DC 20005

UNITED STATES PATENT AND TRADEMARK OFFICE

UNITED STATES DEPARTMENT OF COMMERCE
United States Patent and Trademark Office
Address: COMMISSIONER FOR PATENTS
P.O. Box 1450
Alexandria, Virginia 22313-1450
www.uspto.gov

APPLICATION NO.	FILING DATE	FIRST NAMED INVENTOR	ATTORNEY DOCKET NO.	CONFIRMATION NO.
11/074,880	03/08/2005	Dale A. Davison	18-597-1-1	2115

23898 7590 12/05/2007
VINCENT L. CARNEY LAW OFFICE
P.O. BOX 80836
LINCOLN, NE 68501-0836

EXAMINER
THERKORN, ERNEST G

ART UNIT	PAPER NUMBER
1797	

MAIL DATE	DELIVERY MODE
12/05/2007	PAPER

Please find below and/or attached an Office communication concerning this application or proceeding.

The time period for reply, if any, is set in the attached communication.

UNITED STATES PATENT AND TRADEMARK OFFICE

Commissioner for Patents
United States Patent and Trademark Office
P.O. Box 1450
Alexandria, VA 22313-1450
www.uspto.gov

caf

Mailed: 12-5-07

In re application of	:	
Dale A. Davison	:	DECISION ON
Serial No. 11/074,880	:	PETITION
Filed: March 8, 2005	:	
For: CHROMATOGRAPHIC SOLVENT MONITOR	:	

This is a decision on the PETITION UNDER 37 CFR 1.181 to withdraw the restriction requirement of January 23, 2007.

On January 23, 2007, a restriction requirement was mailed. The restriction requirement included a restriction between method and apparatus claims and further included two species restrictions. On February 23, 2007 a response to the restriction requirement was filed. On March 14, 2007 a letter was mailed by the examiner indicating that the response of February 23, 2007 was not fully responsive. On March 26, 2007 a further response to the restriction requirement was submitted and an invention and two species for examination were elected with traverse. On April 16, 2007 a non-final office action was mailed. This office action withdrew the election of species with regard to replenishment and stopping the run and made the restriction requirement final. In the Office Action of April 16, 2007 the examiner also withdrew claims 3,4 and 12-19 from consideration.

On October 22, 2007 the instant petition under 37 CFR 1.181 was filed to formally request that the restriction requirements be withdrawn.

DECISION

First, applicant argues that the restriction between the invention of claims 1-11 and claims 12-19 is improper because the method and apparatus claims are not drawn to independent and distinct inventions. The examiner takes the position that the inventions are independent and distinct since the apparatus as claimed could be used to practice another and materially different process. The examiner has stated that the apparatus could be used as a chemical or biochemical reactor in a chemical or biochemical reaction process. Applicant argues that the apparatus of claim 12 for performing liquid chromatography could not be used in another and materially different process from the method of liquid chromatography recited in claim 1. In support of this argument applicant argues that the apparatus limitations must perform the claimed method limitations. However, the claimed apparatus appears to require simply solvent reservoirs, a microprocessor, and depth measuring instruments. This type of apparatus could clearly be used to combine two

chemicals for a chemical or biochemical reaction. Functional limitations in an apparatus claim do not impart structure to the claim.

Secondly, applicant argues that the withdrawal of claims 3 and 4 from further examination as being drawn to non-elected species is improper because claims 3 and 4 are not a different species from any of the other claims in the application. Claim 3 recites a bubbler and claim 4 recites a depth sensing apparatus. The examiner required a species restriction between a bubbler, a depth sensor and a pressure sensor in the office action of January 23, 2007. In that office action it is stated that the species are independent or distinct because they do not overlap in scope, i.e. are mutually exclusive. Attention is directed to claim 14, which recites "...in which the pressure sensor is a bubbler". It is clear from this claim that a bubbler is a species of a pressure sensor as argued in the election and the petition. Therefore the species as set forth by the examiner are not mutually exclusive and the species restriction is improper.

Accordingly, the restriction requirement as set forth in the office action of Janaury 23, 2007, between the method and apparatus is proper. However, the species requirement as set forth in the office action of January 23, 2007 is improper and should be withdrawn. The instant petition is **GRANTED-IN-PART.** The examiner is directed to withdraw the species requirement.

Jacqueline M. Stone

Jacqueline M. Stone, Director
Technology Center 1700
Chemical and Materials Engineering

VINCENT L. CARNEY LAW OFFICE
P.O. BOX 80836
LINCOLN NE 68501-0836

UNITED STATES PATENT AND TRADEMARK OFFICE

Commissioner for Patents
United States Patent and Trademark Office
P.O. Box 1450
Alexandria, VA 22313-1450
www.uspto.gov

FENWICK & WEST LLP
SILICON VALLEY CENTER
801 CALIFORNIA STREET
MOUNTAIN VIEW, CA 94041

COPY MAILED

JAN 25 2008

OFFICE OF PETITIONS

In re Application of :
Shao-Po Wu et al :
Application No. 11/074,882 : ON PETITION
Filed: March 7, 2005 :
Attorney Docket No. 23875-09586

This is a decision on the petition, filed January 23, 2008 under 37 CFR 1.313(c)(2) to withdraw the above-identified application from issue after payment of the issue fee.

The petition is **GRANTED**.

The above-identified application is withdrawn from issue for consideration of a submission under 37 CFR 1.114 (request for continued examination). See 37 CFR 1.313(c)(2).

Petitioner is advised that the issue fee paid on December 21, 2007 in the above-identified application cannot be refunded. If, however, the above-identified application is again allowed, petitioner may request that it be applied towards the issue fee required by the new Notice of Allowance.[1]

Telephone inquiries should be directed to Irvin Dingle at (571) 272-3210.

This matter is being referred to Technology Center AU 2825 for processing of the request for continued examination under 37 CFR 1.114 and for consideration of the concurrently filed Information Disclosure Statement.

Irvin Dingle
Petitions Examiner
Office of Petitions

---

[1] The request to apply the issue fee to the new Notice may be satisfied by completing and returning the new Issue Fee Transmittal Form PTOL-85(b), which includes the following language thereon: Commissioner for Patents is requested to apply the Issue Fee and Publication Fee (if any) or re-apply any previously paid issue fee to the application identified above. Petitioner is advised that, whether a fee is indicated as being due or not, the Issue Fee Transmittal Form **must** be completed and timely submitted to avoid abandonment. Note the language in bold text on the first page of the Notice of Allowance and Fee(s) Due (PTOL-85).

UNITED STATES PATENT AND TRADEMARK OFFICE

Commissioner for Patents
United States Patent and Trademark Office
P.O. Box 1450
Alexandria, VA 22313-1450
www.uspto.gov

MERCHANT & GOULD PC
P.O. BOX 2903
MINNEAPOLIS, MN 55402-0903

COPY MAILED

SEP 15 2005

OFFICE OF PETITIONS

In re Application of :
Cameron, et al. :
Application No. 11/074,885 :
Filed: March 7, 2005 :
Attorney Docket No. :
40062.292US01/MS311147.1

ON PETITION

This is a decision on the petition under 37 CFR 1.10(c), filed May 12, 2005, requesting that the above-identified application be accorded a filing date of March 7, 2005.

The United States Patent and Trademark Office records indicate that the presently accorded filing date of the above-identified application is March 7, 2005. Therefore, the petition involves a moot issue.

A replacement filing receipt is enclosed for petitioner's records.

Accordingly, the petition is dismissed.

The petition fee will be refunded to deposit account no. 13-2725.

Telephone inquiries concerning this matter may be directed to the undersigned at (571) 272-3228.

Edward J. Tannouse
Petitions Attorney
Office of Petitions
Office of the Deputy Commissioner
for Patent Examination Policy

Attachment: Replacement filing receipt

UNITED STATES PATENT AND TRADEMARK OFFICE

Commissioner for Patents
United States Patent and Trademark Office
P.O. Box 1450
Alexandria, VA 22313-1450
www.uspto.gov

Paper No.

Maryam Imam
95 SOUTH MARKET STREET, SUITE 570
SAN JOSE CA 95113

MAILED

MAY 04 2009

OFFICE OF PETITIONS

In re Application of Thomas Edward Pare Jr. et al.	
Application No. 11/074,921	DECISION ON PETITION PURSUANT TO 37 C.F.R. § 1.137(B)
Filed: March 7, 2005	
Attorney Docket No.: RALINK-14CIP	
Title: CARRIER RECOVERY ARCHITECTURES FOR MULTI INPUT MULTI OUTPUT ORTHOGONAL FREQUENCY DIVISION MULTIPLEXING RECEIVERS	

This is a decision on the petition pursuant to 37 C.F.R. § 1.137(b), filed February 26, 2009, to revive the above-identified application.

This petition pursuant to 37 C.F.R. § 1.137(b) is **GRANTED**.

The above-identified application became abandoned for failure to submit the issue fee in a timely manner in reply to the Notice of Allowance and Issue Fee Due, mailed October 30, 2008, which set a shortened statutory period for reply of three months. No extensions of time are permitted for transmitting issue fees.[1] Accordingly, the above-identified application became abandoned on January 31, 2009. A Notice of Abandonment was mailed on February 26, 2009.

1 See MPEP § 710.02(e)(III).

A grantable petition pursuant to 37 C.F.R. § 1.137(b) must be accompanied by:

(1) The reply required to the outstanding Office action or notice, unless previously filed;
(2) The petition fee as set forth in 37 C.F.R. § 1.17(m);
(3) A statement that the entire delay in filing the required reply from the due date for the reply until the filing of a grantable petition pursuant to this paragraph was unintentional. The Commissioner may require additional information where there is a question whether the delay was unintentional, and;
(4) Any terminal disclaimer (and fee as set forth in 37 C.F.R. § 1.20(d)) required pursuant to paragraph (d) of this section.

With this petition, Petitioner has submitted both the petition and issue fees, along with the proper statement of unintentional delay. A terminal disclaimer is not required. As such, the first three requirements of Rule 1.137(b) have been met. The fourth requirement of Rule 1.137(b) is not applicable, as a terminal disclaimer is not required.[2]

Pursuant to this decision, the Office of Patent Publication will be notified of this decision so that the present application can be processed into a patent.

Petitioner may find it beneficial to view Private PAIR within a fortnight of the present decision to ensure that the revival has been acknowledged by the Office of Patent Publication in response to this decision. It is noted that all inquiries with regard to any failure of that change in status should be directed to the Office of Patent Publication where that change of status must be effected - **the Office of Petitions cannot effectuate a change of status**.

Telephone inquiries regarding *this decision* should be directed to the undersigned at (571) 272-3225.[3] All other inquiries

---

2 See Rule 1.137(d).
3 Petitioner will note that all practice before the Office should be in writing, and the action of the Office will be based exclusively on the written record in the Office. See 37 C.F.R. § 1.2. As such, Petitioner is reminded that no telephone discussion may be controlling or considered authority for any further action(s) of Petitioner.

concerning the status of the application should be directed to the Office of Patent Publication at 571-272-4200.

/Paul Shanoski/
Paul Shanoski
Senior Attorney
Office of Petitions

UNITED STATES PATENT AND TRADEMARK OFFICE

UNITED STATES DEPARTMENT OF COMMERCE
United States Patent and Trademark Office
Address: COMMISSIONER FOR PATENTS
P.O. Box 1450
Alexandria, Virginia 22313-1450
www.uspto.gov

ARENT FOX LLP
1050 CONNECTICUT AVENUE, N.W.
SUITE 400
WASHINGTON, DC 20036

Mail Date: 04/20/2010

Applicant	: Ryoichiro Takahashi	: DECISION ON REQUEST FOR
Patent Number	: 7601454	: RECALCULATION of PATENT
Issue Date	: 10/13/2009	: TERM ADJUSTMENT IN VIEW
Appliction No	: 11/074,931	: OF WYETH AND NOTICE OF INTENT TO
Filed	: 03/09/2005	: ISSUE CERTIFICATE OF CORRECTION
		:

The Request for Recalculation is **GRANTED** to the extent indicated.

The patent term adjustment has been determined to be **1162** days. The USPTO will *sua sponte* issue a certificate of correction reflecting the amount of PTA days determined by the recalculation.

Prior to the issuance of the certificate of correction, the USPTO will afford patentee an opportunity to be heard and request reconsideration. Accordingly, patentee has **one month or thirty (30) days**, whichever is longer, to file a request for reconsideration of this patent term adjustment calculation. See 35 U.S.C. 154(b)(3)(B)(ii) and 37 CFR 1.322(a)(4). No extensions of time will be granted under 37 CFR 1.136.

Patentee should use document code PET.OP if electronically filing a request for reconsideration of this patent term adjustment calculation. The patentee must also include the information required by 37 CFR 1.705(b)(2) and the fee required by 37 CFR 1.18(e). If patentee does not file a timely request for reconsideration of this patent term adjustment calculation including the information required by 37 CFR 1.705(b)(2) and the fee required by 37 CFR 1.18(e), the USPTO will issue a certificate of correction reflecting the PTA determination noted above.

Patentee should be aware that in order to preserve the right to review in the United States District Court for the District of Columbia of the USPTO patent term adjustment determination, patentee must ensure that he or she also take the steps required under 35 U.S.C. 154(b)(4)(A) in a timely manner. Nothing in the request for recalculation should be construed as providing an alternative time frame for commencing a civil action under 35 U.S.C. 154(b)(4)(A).

Any questions concerning this decision should be directed to the Office of Patent Legal Administration at 571-272-7702.

UNITED STATES PATENT AND TRADEMARK OFFICE

UNITED STATES DEPARTMENT OF COMMERCE
United States Patent and Trademark Office
Address: COMMISSIONER FOR PATENTS
P.O. Box 1450
Alexandria, Virginia 22313-1450
www.uspto.gov

ARENT FOX LLP
1050 CONNECTICUT AVENUE, N.W.
SUITE 400
WASHINGTON, DC 20036

Mail Date: 05/17/2010

Applicant : Ryoichiro Takahashi
Patent Number : 7601454
Issue Date : 10/13/2009
Application No : 11/074,931
Filed : 03/09/2005

: NOTICE CONCERNING IMPROPER
: CALCULATION OF PATENT TERM
: ADJUSTMENT BASED UPON USPTO
: IMPROPERLY MEASURING REDUCTION
: PERIOD UNDER 37 CFR 1.704(c)(10).

The United States Patent and Trademark Office (USPTO) discovered that in processing the recent recalculation decisions mailed in response to patentee's filed Request for Recalculation of Patent Term Adjustment in view of Wyeth, the USPTO improperly measured the reduction period for reductions under 37 CFR 1.704(c)(10). Pursuant to 37 CFR 1.704(c)(10), patentee's reduction begins on the date of filing the amendment under 37 CFR 1.312 ("1.312 amendment") or other related paper and ends on the date that the Office mails a response to the filing of the 1.312 amendment or other paper. It has been discovered that during the recalculation, the calculation failed to the limit the reduction to the mail date of the response to the 1.312 amendment or other paper. Accordingly, patentee's reductions were greater than warranted.

This notice **VACATES** the previous GRANTED request for recalculation and provides patentee with a revised GRANTED recalculation.

The patent term adjustment has been determined to be **1229** days. The USPTO will *sua sponte* issue a certificate of correction reflecting the amount of patent term adjustment (PTA) days determined by the recalculation.

Prior to the issuance of the certificate of correction, the USPTO will afford patentee an opportunity to be heard and request reconsideration. Accordingly, patentee has **one month or thirty (30) days** from the mail date of this notice, whichever is longer, to file a request for reconsideration of this PTA calculation. See 35 U.S.C. § 154(b)(3)(B)(ii) and 37 CFR 1.322(a)(4).

Patentee should use document code PET.OP if electronically filing a request for reconsideration of this PTA calculation. The patentee must also include the information required by 37 CFR 1.705(b)(2), and the fee required by 37 CFR 1.18(e). If patentee does not file a timely request for reconsideration of this PTA calculation, including the information required by 37 CFR 1.705(b)(2) and the fee required by 37 CFR 1.18(e), the USPTO will issue a certificate of correction reflecting the PTA determination noted above.

Patentee should be aware that in order to preserve the right of review of the USPTO's PTA determination in the United States District Court for the District of Columbia, patentee must ensure that the steps required under 35 U.S.C. § 154 (b)(4) are taken in a timely manner. Nothing in the request for recalculation should be construed as providing an alternative time frame for commencing a civil action under 35 U.S.C. § 154(b)(4).

UNITED STATES PATENT AND TRADEMARK OFFICE

Commissioner for Patents
United States Patent and Trademark Office
P.O. Box 1450
Alexandria, VA 22313-1450
www.uspto.gov

WINSTON & STRAWN LLP
1700 K STREET, N.W.
WASHINGTON DC 20006

COPY MAILED

FEB 17 2006

OFFICE OF PETITIONS

In re Application of	:	
Smith et al.	:	
Application No. 11/074,944	:	DECISION REFUSING STATUS
Filed: March 9, 2005	:	UNDER 37 CFR 1.47(a)
Attorney Docket No. 541282000500	:	
Title: POWER TRAILER STRUCTURAL	:	
ELEMENTS FOR AIR FLOW, SOUND	:	
ATTENUATION AND FIRE SUPPRESSION	:	

This is in response to the petition filed November 14, 2005, under 37 CFR. §1.47(a).

The petition under 37 CFR. §1.47(a) is **DISMISSED**.

Rule 47 applicant is given TWO MONTHS from the mailing date of this decision to reply, correcting the below-noted deficiencies. Any reply should be entitled "Request for Reconsideration of Petition Under 37 CFR. §1.47(a)," and should only address the deficiencies noted below, except that the reply may include an oath or declaration executed by the non-signing inventor. **Failure to respond will result in abandonment of the application**. Any extensions of time will be governed by 37 CFR. §1.136(a).

The above-identified application was filed on March 9, 2005, without an executed oath or declaration. Accordingly, on April 12, 2005, applicant was mailed a "Notice to File Missing Parts of Nonprovisional Application - Filing Date Granted," requiring for the purposes of this decision an executed oath or declaration in compliance with §1.63, and a surcharge for its late filing. This Notice set an extendable two-month period for reply of June 12, 2005.

In reply, applicant filed a petition, the surcharge for late filing of the declaration, and a partially executed declaration. To make the reply timely, a five (5) month extension of time was also submitted. Pursuant to petitioner's request deposit account 50-1814 will be charged the $200.00 petition fee.

A grantable petition under 37 CFR. §1.47(a) requires: (1) proof that the non-signing inventor cannot be reached or refuses to sign the oath or declaration after having been presented with the application papers (specification, claims and drawings); (2) an acceptable oath or

declaration in compliance with 35 U.S.C. §§115 and 116; (3) the petition fee; and (4) a statement of the last known address of the non-signing inventor. The instant petition does not satisfy requirements (1), (2) and (4).

As to item (1), rule 47 applicant has failed to show that inventors Smith and Hartig were ever presented with a copy of the application papers. Before a refusal can be alleged, applicant must demonstrate a bona fide attempt was made to present a copy of application papers (specification, including claims, drawings, and oath or declaration) to the non-signing inventors. See MPEP 409.03(d). To the extent rule 47 applicant contends that they are unable to locate inventors Smith and Jackson, evidence to support such a finding has not been presented. Where an inventor cannot be located/reached as in the case of inventors Smith and Hartig, rule 47 applicant must demonstrate diligent effort was made to find or reach the non-signing inventors. See MPEP 409.03(d). The statements made in the petition do not illustrate "diligent effort" was made to locate the non-signing inventor. Copies of documentary evidence such as internet searches, certified mail return receipts, cover letters of instructions, telegrams, that support a finding that the nonsigning inventor could not be found or reached should be made part of the statement. The steps taken to locate the whereabouts of the nonsigning inventor should be included in a statement of facts. It is important that the statement contain facts as opposed to conclusions. Petitioner should present a signed statement of facts from a person that has first hand knowledge of the diligent efforts made to locate the non-signing inventor. If the inventors are located a copy of the application papers (specification, including claims, drawings, and oath or declaration) should be mailed to the inventors' mailing address.

As to item (2) the declaration does not contain the mailing and or residence address of inventor Hartig pursuant to 37 CFR 1.63 (c)(1). A review of the file confirms that such information is not located in an application data sheet pursuant to 37 CFR 1.76. A supplemental declaration or ADS is required.

As to item (4), rule 47 applicant has failed to provide a statement of the last known address of inventor Hartig. It is presumed that the last known address of inventor Smith is the address contained in the declaration. If this is an incorrect assumption petitioner is obligated to inform the Office.

Further correspondence with respect to this matter should be addressed as follows:

By mail:	Mail Stop Petition Commissioner for Patents P.O. Box 1450 Alexandria, VA 22313-1450
By facsimile:	(571) 273-8300
By delivery service: (FedEx, UPS, DHL, etc.)	U.S. Patent and Trademark Office Customer Service Window, Randolph Building 401 Dulany Street Alexandria, VA 22314

Telephone inquiries related to this decision may be directed to the undersigned at (571) 272-3215.

Charlema R. Grant

Charlema R. Grant
Petitions Attorney
Office of Petitions

UNITED STATES PATENT AND TRADEMARK OFFICE

Commissioner for Patents
United States Patent and Trademark Office
P.O. Box 1450
Alexandria, VA 22313-1450
www.uspto.gov

Morrison & Foerster LLP
1650 Tysons Boulevard
Suite 300
McClean, VA 22102

COPY MAILED
OCT 1 0 2006
OFFICE OF PETITIONS

In re Application of	:	
Scott W. Smith et al.	:	
Application No. 11/074,944	:	DECISION ON PETITION
Filed: November 3, 2005	:	TO WITHDRAW
Attorney Docket No. 83470-4000	:	FROM RECORD
	:	

This is a decision on the Request to Withdraw as attorney or agent of record under 37 C.F.R. § 1.36(b), filed November 03, 2005.

The request is **NOT APPROVED** as moot.

A review of the file record indicates that the power of attorney to the attorneys and/or agents associated with Customer Number 25227 has been revoked by the assignee of the patent application on November 14, 2005. Accordingly, the request to withdraw under 37 C.F.R. § 1.36(b) is moot.

All future communications from the Office will continue to be directed to the below-listed address until otherwise notified by applicant.

Telephone inquires concerning this decision should be directed to Terri Williams at 571-272-2991.

David Bucci
Petitions Examiner
Office of Petitions

cc: **Winston & Strawn LLP**
1700 K Street, N.W.
Washington, D.C. 20006

UNITED STATES PATENT AND TRADEMARK OFFICE

Commissioner for Patents
United States Patent and Trademark Office
P.O. Box 1450
Alexandria, VA 22313-1450
www.uspto.gov

WINSTON & STRAWN LLP
PATENT DEPARTMENT
1700 K STREET, N.W.
WASHINGTON DC 20006

COPY MAILED

JAN 31 2007

OFFICE OF PETITIONS

In re Application of
Scott Smith, William J. Hartig and Brian Hulse
Application No.11/074,944
Filed: March 9, 2005
Attorney Docket No. 83470-4000
Title: POWER TRAILER STRUCTURAL ELEMENTS FOR AIR FLOW, SOUND ATTENUATION AND FIRE SUPPRESSION

DECISION GRANTING STATUS

UNDER 37 CFR 1.47(A)

This is in response to the renewed petition under 37 CFR 1.47(a) filed June 12, 2006.

The petition is GRANTED.

Petitioner has shown that the non-signing inventor Hartig can not be reached or located and diligent effort has been used to locate the inventor. The efforts outlined by petitioner demonstrate diligent effort was used to attempt to locate non-signing inventor.

The above-identified application and papers have been reviewed and found in compliance with 37 CFR 1.47(a). This application is hereby accorded Rule 1.47(a) status.

As provided in Rule 1.47(c), this Office will forward notice of this application's filing to the non-signing inventor at the address given in the petition. Notice of the filing of this application will also be published in the Official Gazette.

After this decision is mailed, the application will be forwarded to the Office of Initial Patent Examination for further processing.

Telephone inquiries regarding this communication should be directed to the undersigned at (571) 272-3215.

Charlema R. Grant

Charlema R. Grant
Petitions Attorney
Office of Petitions

UNITED STATES PATENT AND TRADEMARK OFFICE

Commissioner for Patents
United States Patent and Trademark Office
P.O. Box 1450
Alexandria, VA 22313-1450
www.uspto.gov

William Hartig
1032 Seabrook Way
Cincinnati, OH 45245

In re Application of
Scott Smith, William J. Hartig and Brian Hulse
Application No.11/074,944
Filed: March 9, 2005
Attorney Docket No. 83470-4000
Title: POWER TRAILER STRUCTURAL ELEMENTS FOR AIR FLOW, SOUND ATTENUATION AND FIRE SUPPRESSION

: LETTER

COPY MAILED

JAN 3 1 2007

OFFICE OF PETITIONS

Dear Mr. Hartig:

You are named as a joint inventor in the above-identified United States patent application filed under the provisions of 35 U.S.C. § 116 (United States Code) and 37 C.F.R. § 1.47(a), Rules of Practice in Patent Cases. Should a patent be granted on the application you will be designated therein as a joint inventor.

As a named inventor you are entitled to inspect any paper in the file wrapper of the application, order copies of all or any part thereof (at a prepaid cost as per 37 C.F.R. § 1.19) or make your position of record in the application. Alternatively, you may arrange to do any of the preceding through a registered patent attorney or agent presenting written authorization from you. If you care to join the application, counsel of record (see below) would presumably assist you. Joining in the application would entail the filing of an appropriate oath or declaration by you pursuant to 37 C.F.R. § 1.63.

Telephone inquiries regarding this communication should be directed to Petitions Attorney Charlema R. Grant at (571) 272-3215. Requests for information regarding your application should be directed to the File Information Unit at (703) 308-2733. Information regarding how to pay for and order a copy of the application, or a specific paper in the application, should be directed to Certification Division at (703) 308-9726 or 1-800-972-6382 (outside the Washington D.C. area).

Charlema R Grant

Charlema R. Grant
Petitions Attorney
Office of Petitions

WINSTON & STRAWN LLP
PATENT DEPARTMENT
1700 K STREET, N.W.
WASHINGTON DC 20006
ATTN: Allan A. Fanucci

UNITED STATES PATENT AND TRADEMARK OFFICE

Commissioner for Patents
United States Patent and Trademark Office
P.O. Box 1450
Alexandria, VA 22313-1450
www.uspto.gov

Winston & Strawn LLP
PATENT DEPARTMENT
1700 K Street, N.W.
Washington, DC 20006

MAILED

MAR 26 2009

OFFICE OF PETITIONS

In re Application of	:	
Scott W. Smith, et al.	:	
Application No. 11/074,944	:	DECISION ON PETITION
Filed: March 9, 2005	:	TO WITHDRAW
Attorney Docket No. 83470-4000	:	FROM RECORD
	:	

This is a decision on the Request to Withdraw as attorney or agent of record under 37 C.F.R. § 1.36(b), filed December 17, 2008

The request is **APPROVED**.

A grantable request to withdraw as attorney/agent of record must be signed by every attorney/agent seeking to withdraw or contain a clear indication that one attorney is signing on behalf of another/others. A request to withdraw will not be approved unless at least 30 (thirty) days would remain between the date of approval and the later of the expiration date of a time to file a response or the expiration date of the maximum time period which can be extended under 37 C.F.R. § 1.136(a).

The request was signed by Allan A. Fanucci on behalf of all attorneys of record. All attorneys/agents have been withdrawn. Applicant is reminded that there is no attorney of record at this time.

The correspondence address of record has been changed and the new correspondence address is the address indicated below.

There is an outstanding Office action mailed November 24, 2008 that requires a reply from the applicant.

Telephone inquiries concerning this decision should be directed to Terri Williams at 571-272-2991.

Terri Williams
Petitions Examiner
Office of Petitions

cc: **VULCAN CAPITAL MANAGEMENT**
150 East 52nd Street, 11th Floor
New York, NY 10022

UNITED STATES PATENT AND TRADEMARK OFFICE

UNITED STATES DEPARTMENT OF COMMERCE
United States Patent and Trademark Office
Address: COMMISSIONER FOR PATENTS
P.O. Box 1450
Alexandria, Virginia 22313-1450
www.uspto.gov

APPLICATION NUMBER	FILING OR 371(C) DATE	FIRST NAMED APPLICANT	ATTY. DOCKET NO./TITLE
11/074,944	03/09/2005	Scott W. Smith	83470-4000

CONFIRMATION NO. 7093

POWER OF ATTORNEY NOTICE

28765
WINSTON & STRAWN LLP
PATENT DEPARTMENT
1700 K STREET, N.W.
WASHINGTON, DC 20006

OC000000035169442

Date Mailed: 03/25/2009

NOTICE REGARDING CHANGE OF POWER OF ATTORNEY

This is in response to the Power of Attorney filed 12/17/2008.

- The withdrawal as attorney in this application has been accepted. Future correspondence will be mailed to the new address of record. 37 CFR 1.33.

/tswilliams/

Office of Data Management, Application Assistance Unit (571) 272-4000, or (571) 272-4200, or 1-888-786-0101

UNITED STATES PATENT AND TRADEMARK OFFICE

Commissioner for Patents
United States Patent and Trademark Office
P.O. Box 1450
Alexandria, VA 22313-1450
www.uspto.gov

WINSTON & STRAWN LLP
1700 K STREET, N.W.
WASHINGTON DC 20006

COPY MAILED

FEB 1 7 2006

OFFICE OF PETITIONS

In re Application of	:	
Smith et al.	:	
Application No. 11/074,945	:	DECISION REFUSING STATUS
Filed: March 9, 2005	:	UNDER 37 CFR 1.47(a)
Attorney Docket No. 541282000900	:	
Title: Power Trailer Support Structure and	:	
Leveling System	:	

This is in response to the petition filed November 14, 2005, under 37 CFR. §1.47(a).

The petition under 37 CFR. §1.47(a) is **DISMISSED**.

Rule 47 applicant is given TWO MONTHS from the mailing date of this decision to reply, correcting the below-noted deficiencies. Any reply should be entitled "Request for Reconsideration of Petition Under 37 CFR. §1.47(a)," and should only address the deficiencies noted below, except that the reply may include an oath or declaration executed by the non-signing inventor. **Failure to respond will result in abandonment of the application**. Any extensions of time will be governed by 37 CFR. §1.136(a).

The above-identified application was filed on March 9, 2005, without an executed oath or declaration. Accordingly, on April 12, 2005, applicant was mailed a "Notice to File Missing Parts of Nonprovisional Application - Filing Date Granted," requiring for the purposes of this decision an executed oath or declaration in compliance with §1.63, and a surcharge for its late filing. This Notice set an extendable two-month period for reply of June 12, 2005.

In reply, applicant filed a petition, the surcharge for late filing of the declaration, and a partially executed declaration. To make the reply timely, a five (5) month extension of time was also submitted. Pursuant to petitioner's request deposit account 50-1814 will be charged the $200.00 petition fee.

A grantable petition under 37 CFR. §1.47(a) requires: (1) proof that the non-signing inventor cannot be reached or refuses to sign the oath or declaration after having been presented with the application papers (specification, claims and drawings); (2) an acceptable oath or declaration in compliance with 35 U.S.C. §§115 and 116; (3) the petition fee; and (4) a

statement of the last known address of the non-signing inventor. The instant petition does not satisfy requirements (1), (2) and (4).

As to item (1), rule 47 applicant has failed to show that inventors Smith and Jackson were ever presented with a copy of the application papers. Before a refusal can be alleged, applicant must demonstrate a bona fide attempt was made to present a copy of application papers (specification, including claims, drawings, and oath or declaration) to the non-signing inventors. See MPEP 409.03(d). To the extent rule 47 applicant contends that they are unable to locate inventors Smith and Jackson, evidence to support such a finding has not been presented. Where an inventor cannot be located/reached as in the case of inventors Smith and Jackson, rule 47 applicant must demonstrate diligent effort was made to find or reach the non-signing inventors. See MPEP 409.03(d). The statements made in the petition do not illustrate "diligent effort" was made to locate the non-signing inventor. Copies of documentary evidence such as internet searches, certified mail return receipts, cover letters of instructions, telegrams, that support a finding that the nonsigning inventor could not be found or reached should be made part of the statement. The steps taken to locate the whereabouts of the nonsigning inventor should be included in a statement of facts. It is important that the statement contain facts as opposed to conclusions. Petitioner should present a signed statement of facts from a person that has first hand knowledge of the diligent efforts made to locate the non-signing inventor. If the inventors are located a copy of the application papers (specification, including claims, drawings, and oath or declaration) should be mailed to the inventors' mailing address.

As to item (2) the declaration does not contain the mailing and or residence address of inventor Jackson pursuant to 37 CFR 1.63 (c)(1). A review of the file confirms that such information is not located in an application data sheet pursuant to 37 CFR 1.76. A supplemental declaration or ADS is required.

As to item (4), rule 47 applicant has failed to provide a statement of the last known address of inventor Jackson. It is presumed that the last known address of inventor Smith is the address contained in the declaration. If this is an incorrect assumption petitioner is obligated to inform the Office.

Further correspondence with respect to this matter should be addressed as follows:

By mail:	Mail Stop Petition Commissioner for Patents P.O. Box 1450 Alexandria, VA 22313-1450
By facsimile:	(571) 273-8300
By delivery service: (FedEx, UPS, DHL, etc.)	U.S. Patent and Trademark Office Customer Service Window, Randolph Building 401 Dulany Street Alexandria, VA 22314

Telephone inquiries related to this decision may be directed to the undersigned at (571) 272-3215.

Charlema R. Grant

Charlema R. Grant
Petitions Attorney
Office of Petitions

UNITED STATES PATENT AND TRADEMARK OFFICE

Commissioner for Patents
United States Patent and Trademark Office
P.O. Box 1450
Alexandria, VA 22313-1450
www.uspto.gov

COPY MAILED

JUN 1 3 2006

OFFICE OF PETITIONS

WINSTON & STRAWN LLP
1700 K STREET, N.W.
WASHINGTON DC 20006

In re Application of
Scott Smith, Brian Hulse and Stephen Jackson
Application No.11/074,945
Filed: March 9, 2005
Attorney Docket No. 541282000900
Title: POWER TRAILER SUPPORT STRUCTURE AN LEVELING SYSTEM

DECISION GRANTING STATUS

UNDER 37 CFR 1.47(A)

This is in response to the renewed petition under 37 CFR 1.47(a) filed April 27, 2006.

The petition is GRANTED.

Petitioner has shown that the non-signing inventor Jackson can not be reached or located and diligent effort has been used to locate the inventor. The efforts outlined by petitioner demonstrate diligent effort was used to attempt to locate non-signing inventor.

The above-identified application and papers have been reviewed and found in compliance with 37 CFR 1.47(a). This application is hereby accorded Rule 1.47(a) status.

As provided in Rule 1.47(c), this Office will forward notice of this application's filing to the non-signing inventor at the address given in the petition. Notice of the filing of this application will also be published in the Official Gazette.

After this decision is mailed, the application will be forwarded to the Office of Initial Patent Examination for further processing.

Telephone inquiries regarding this communication should be directed to the undersigned at (571) 272-3215.

Charlema R. Grant

Charlema R. Grant
Petitions Attorney
Office of Petitions

UNITED STATES PATENT AND TRADEMARK OFFICE

Commissioner for Patents
United States Patent and Trademark Office
P.O. Box 1450
Alexandria, VA 22313-1450
www.uspto.gov

Stephen M. Jackson
510 Fairbanks Drive
Magnolia, Texas 77354

In re Application of
Scott Smith, Brian Hulse and Stephen Jackson
Application No.11/074,945
Filed: March 9, 2005
Attorney Docket No. 541282000900
Title: POWER TRAILER SUPPORT STRUCTURE AN LEVELING SYSTEM

: LETTER

COPY MAILED
JUN 13 2006
OFFICE OF PETITIONS

Dear Mr. Jackson :

You are named as a joint inventor in the above-identified United States patent application filed under the provisions of 35 U.S.C. 116 (United States Code) and 37 C.F.R. § 1.47(a), Rules of Practice in Patent Cases. Should a patent be granted on the application you will be designated therein as a joint inventor.

As a named inventor you are entitled to inspect any paper in the file wrapper of the application, order copies of all or any part thereof (at a prepaid cost as per 37 C.F.R. § 1.19) or make your position of record in the application. Alternatively, you may arrange to do any of the preceding through a registered patent attorney or agent presenting written authorization from you. If you care to join the application, applicant (see below) would presumably assist you. Joining in the application would entail the filing of an appropriate oath or declaration by you pursuant to 37 C.F.R. § 1.63.

Telephone inquiries regarding this communication should be directed to Petitions Attorney Charlema R. Grant at (571) 272-3215. Requests for information regarding your application should be directed to the File Information Unit at (703) 308-2733. Information regarding how to pay for and order a copy of the application, or a specific paper in the application, should be directed to Certification Division at (703) 308-9726 or 1-800-972-6382 (outside the Washington D.C. area).

Charlema R. Grant
Petitions Attorney
Office of Petitions

WINSTON & STRAWN LLP
1700 K STREET, N.W.
WASHINGTON DC 20006
HOWARD I. SHIN

UNITED STATES PATENT AND TRADEMARK OFFICE

Commissioner for Patents
United States Patent and Trademark Office
P.O. Box 1450
Alexandria, VA 22313-1450
www.uspto.gov

MCDERMOTT WILL & EMERY LLP
600 13TH STREET, N.W.
WASHINGTON DC 20005-3096

COPY MAILED

JUN 20 2008

OFFICE OF PETITIONS

In re Application of
Kazuyoshi Tomochika et al.
Application No. 11/074,947
Filed: March 9, 2005
Attorney Docket No: **067336-0033**

ON PETITION

This is a decision on the petition filed March 6, 2007, under 37 CFR 1.59(b) to expunge information unintentionally submitted.

Petitioners argue that one sheet of drawings, labeled "Replacement Sheet" and containing the drawing of Figure 9, filed October 25, 2006 in response to the Final Office Action mailed August 8, 2006 was unintentionally filed, unrelated to the instant application and that the failure to expunge and return said documents would cause harm to the party in interest.

Based on a review of the file and the documents entitled "Replacement Sheet" and pursuant to MPEP § 724.05(II) it is determined that the information contained therein is not important to a reasonable Examiner in deciding on patentability. It is agreed therefore that justice would be served by an expungement of those documents entitled "Replacement Sheet".

However, the present application as filed has been scanned and is maintained in the Office in an Image File Wrapper (IFW). The instant request is not for national security reasons, thus, the pages will not be removed from the IFW. Instead, the Office has "hidden" the documents entitled "miscellaneous incoming letter" as immaterial to the instant application and confidential. See *Reminder of the Proper Procedure for Filing Confidential Information Pursuant to MPEP 724.02(signed April 23, 2004)*, 1282 OG 107 (May 18, 2004).

Accordingly, the petition is **GRANTED**.

This matter is being referred to Technology Center 3749 for further examination in due course.

Telephone inquiries specific to this matter should be directed to the undersigned Petitions Attorney at (571) 272-3212.

Patricia Faison-Ball

Patricia Faison-Ball
Senior Petitions Attorney
Office of Petitions

UNITED STATES PATENT AND TRADEMARK OFFICE

Commissioner for Patents
United States Patent and Trademark Office
P.O. Box 1450
Alexandria, VA 22313-1450
www.uspto.gov

MERCHANT & GOULD P.C.
P.O. BOX 2903
MINNEAPOLIS MN 55402-0903

COPY MAILED

MAY 10 2007

OFFICE OF PETITIONS

In re Application of	:	
RIGLEY, Karen O. et al.	:	
Application No. 11/074,952	:	DECISION ON PETITION
Filed: March 07, 2005	:	TO WITHDRAW
Attorney Docket No. **163.1904USU1**	:	FROM RECORD
	:	

This is a decision on the Request to Withdraw as attorney or agent of record under 37 C.F.R. § 1.36(b), filed January 22, 2007.

The request is **APPROVED**.

A grantable request to withdraw as attorney/agent of record must be signed by every attorney/agent seeking to withdraw or contain a clear indication that one attorney is signing on behalf of another/others. A request to withdraw will not be approved unless at least 30 (thirty) days would remain between the date of approval and the later of the expiration date of a time to file a response or the expiration date of the maximum time period which can be extended under 37 C.F.R. § 1.136(a).

The request was signed by Sarah M. Monfeldt. Sarah M. Monfeldt has been withdrawn, all other attorneys remain of record. The correspondence address of record remains unchanged.

Telephone inquiries concerning this decision should be directed to Tredelle Jackson at 571-272-2783.

Monica A. Graves
Petitions Examiner
Office of Petitions

UNITED STATES PATENT AND TRADEMARK OFFICE

Commissioner for Patents
United States Patent and Trademark Office
P.O. Box 1450
Alexandria, VA 22313-1450
www.uspto.gov

DURA AUTOMOTIVE SYSTEMS, INC.
2791 RESEARCH DRIVE
ROCHESTER HILLS MI 48309

COPY MAILED

NOV 30 2007

OFFICE OF PETITIONS

In re Application of :
Brian Douglas Howe et al :
Application No. 11/074,965 : DECISION ON PETITION
Filed: March 8, 2005 :
Attorney Docket No. 03-08 :

This is a decision on the petition under 37 CFR 1.137(b), filed November 15, 2007, to revive the above-identified application.

The petition is **GRANTED**.

This application became abandoned for failure to timely pay the issue and publication fees on or before September 25, 2007, as required by the Notice of Allowance and Fee(s) Due, mailed June 25, 2007. Accordingly, the date of abandonment of this application is September 26, 2007. A Notice of Abandonment was mailed on October 19, 2007.

The petition satisfies the requirements of 37 CFR 1.137(b) in that petitioner has supplied (1) the reply in the form of payment of the issue fee of $1,440 and the publication fee of $300, (2) the petition fee of $1,540, and (3) a proper statement of unintentional delay. Accordingly, the issue and publication fees are accepted as being unintentionally delayed.

It is not apparent whether the person signing the statement of unintentional delay was in a position to have firsthand or direct knowledge of the facts and circumstances of the delay at issue. Nevertheless, such statement is being treated as having been made as the result of a reasonable inquiry into the facts and circumstances of such delay. See 37 CFR 10.18(b) and Changes to Patent Practice and Procedure; Final Rule Notice, 62 Fed. Reg. 53131, 53178 (October 10, 1997), 1203 Off. Gaz. Pat. Office 63, 103 (October 21, 1997). In the event that such an inquiry has not been made, petitioner must make such an inquiry. If such inquiry results in the discovery that it is not correct that the entire delay in filing the required reply from the due date for the reply until the filing of a grantable petition pursuant to

37 CFR 1.137(b) was unintentional, petitioner must notify the Office.

Telephone inquiries concerning this decision should be directed to the undersigned at (571) 272-3218.

This application is being referred to Office of Data Management for appropriate processing in accordance with this decision on petition.

Frances Hicks
Petitions Examiner
Office of Petitions

UNITED STATES PATENT AND TRADEMARK OFFICE

UNITED STATES DEPARTMENT OF COMMERCE
United States Patent and Trademark Office
Address: COMMISSIONER FOR PATENTS
P.O. Box 1450
Alexandria, Virginia 22313-1450
www.uspto.gov

APPLICATION NUMBER	FILING OR 371(C) DATE	FIRST NAMED APPLICANT	ATTY. DOCKET NO./TITLE
11/074,965	03/08/2005	Brian Douglas Howe	3993968-150413-12

CONFIRMATION NO. 2298

POWER OF ATTORNEY NOTICE

Porter, Wright, Morris & Arthur LLP
ATTN: Intellectual Property Department
28th Floor
41 South High Street
Columbus, OH 43215-6194

OC000000027000616

Date Mailed: 11/30/2007

NOTICE REGARDING CHANGE OF POWER OF ATTORNEY

This is in response to the Power of Attorney filed 11/15/2007.

- The Power of Attorney to you in this application has been revoked by the assignee who has intervened as provided by 37 CFR 3.71. Future correspondence will be mailed to the new address of record(37 CFR 1.33).

/fmhicks/

Office of Initial Patent Examination (571) 272-4000 or 1-800-PTO-9199

UNITED STATES PATENT AND TRADEMARK OFFICE

UNITED STATES DEPARTMENT OF COMMERCE
United States Patent and Trademark Office
Address: COMMISSIONER FOR PATENTS
P.O. Box 1450
Alexandria, Virginia 22313-1450
www.uspto.gov

APPLICATION NUMBER	FILING OR 371(C) DATE	FIRST NAMED APPLICANT	ATTY. DOCKET NO./TITLE
11/074,965	03/08/2005	Brian Douglas Howe	03-08

CONFIRMATION NO. 2298

POA ACCEPTANCE LETTER

50716
DURA AUTOMOTIVE SYSTEMS, INC.
2791 RESEARCH DRIVE
ROCHESTER HILLS, MI 48309

OC000000027000700

Date Mailed: 11/30/2007

NOTICE OF ACCEPTANCE OF POWER OF ATTORNEY

This is in response to the Power of Attorney filed 11/15/2007.

The Power of Attorney in this application is accepted. Correspondence in this application will be mailed to the above address as provided by 37 CFR 1.33.

/fmhicks/

Office of Initial Patent Examination (571) 272-4000 or 1-800-PTO-9199

UNITED STATES PATENT AND TRADEMARK OFFICE

UNITED STATES DEPARTMENT OF COMMERCE
United States Patent and Trademark Office
Address: COMMISSIONER FOR PATENTS
P.O. Box 1450
Alexandria, Virginia 22313-1450
www.uspto.gov

THE LAW OFFICES OF JOHN C. SCOTT, LLC
C/O INTELLEVELE, LLC
P. O. BOX 52050
MINNEAPOLIS, MN 55402

Mail Date: 06/02/2010

Applicant	: Boris Ginzburg	: DECISION ON REQUEST FOR
Patent Number	: 7633891	: RECALCULATION of PATENT
Issue Date	: 12/15/2009	: TERM ADJUSTMENT IN VIEW
Application No	: 11/074,987	: OF WYETH AND NOTICE OF INTENT TO
Filed	: 03/08/2005	: ISSUE CERTIFICATE OF CORRECTION
		:

The Request for Recalculation is **GRANTED** to the extent indicated.

The patent term adjustment has been determined to be **1276** days. The USPTO will *sua sponte* issue a certificate of correction reflecting the amount of PTA days determined by the recalculation.

Prior to the issuance of the certificate of correction, the USPTO will afford patentee an opportunity to be heard and request reconsideration. Accordingly, patentee has **one month or thirty (30) days**, whichever is longer, to file a request for reconsideration of this patent term adjustment calculation. See 35 U.S.C. 154(b)(3)(B)(ii) and 37 CFR 1.322(a)(4). No extensions of time will be granted under 37 CFR 1.136.

Patentee should use document code PET.OP if electronically filing a request for reconsideration of this patent term adjustment calculation. The patentee must also include the information required by 37 CFR 1.705(b)(2) and the fee required by 37 CFR 1.18(e). If patentee does not file a timely request for reconsideration of this patent term adjustment calculation including the information required by 37 CFR 1.705(b)(2) and the fee required by 37 CFR 1.18(e), the USPTO will issue a certificate of correction reflecting the PTA determination noted above.

Patentee should be aware that in order to preserve the right to review in the United States District Court for the District of Columbia of the USPTO patent term adjustment determination, patentee must ensure that he or she also take the steps required under 35 U.S.C. 154(b)(4)(A) in a timely manner. Nothing in the request for recalculation should be construed as providing an alternative time frame for commencing a civil action under 35 U.S.C. 154(b)(4)(A).

Any questions concerning this decision should be directed to the Office of Patent Legal Administration at 571-272-7702.

SPE RESPONSE FOR CERTIFICATE OF CORRECTION

DATE : 12/3/09 Paper No.: —

TO SPE OF : ART UNIT 2624

SUBJECT : Request for Certificate of Correction for Appl. No.: 11/074992 Patent No.: 7149364 B2

Please respond to this request for a certificate of correction within 7 days.

FOR IFW FILES:

Please review the requested changes/corrections as shown in the **COCIN** document(s) in the IFW application image. No new matter should be introduced, nor should the scope or meaning of the claims be changed.

Please complete the response (see below) and forward the completed response to scanning using document code **COCX**.

FOR PAPER FILES:

Please review the requested changes/corrections as shown in the attached certificate of correction. Please complete this form (see below) and forward it with the file to:

Certificates of Correction Branch (CofC)
Randolph Square – 9D10-A
Palm Location 7580

Virginia Tolbert
Certificates of Correction Branch
571-272-0460

Thank You For Your Assistance

The request for issuing the above-identified correction(s) is hereby:
Note your decision on the appropriate box.

- ☒ **Approved** — All changes apply.
- ☐ **Approved in Part** — Specify below which changes do not apply.
- ☐ **Denied** — State the reasons for denial below.

Comments: OK TO ISSUE THE ABOVE IDENTIFIED CORRECTIONS.

/KANJI PATEL/

SAMIR AHMED
SUPERVISORY PATENT EXAMINER 2624

PTOL-306 (REV. 7/03) U.S. DEPARTMENT OF COMMERCE Patent and Trademark Office

SPE RESPONSE FOR CERTIFICATE OF CORRECTION

Paper No.:20090825

DATE : August 31, 2009

TO SPE OF : ART UNIT 3742

SUBJECT : Request for Certificate of Correction on Patent No.: 7322276

A response is requested with respect to the accompanying request for a certificate of correction.

Please complete this form and return with file, within **7** days to:
Certificates of Correction Branch – ST (South Tower) 9A22
Palm location **7590** - Tel. No. (703) 305-8309

With respect to the change(s) requested, correcting Office and/or Applicant's errors, should the patent read as shown in the certificate of correction? No new matter should be introduced, nor should the scope or meaning of the claims be changed.

Thank You For Your Assistance **Certificates of Correction Branch**

The request for issuing the above-identified correction(s) is hereby:
Note your decision on the appropriate box.

☒ **Approved** **All** changes apply.

☐ **Approved in Part** Specify below which changes **do not** apply.

☐ **Denied** State the reasons for denial below.

Comments:

SPE: /Tu B. Hoang/ **Art Unit** 3742

UNITED STATES PATENT AND TRADEMARK OFFICE

Commissioner for Patents
United States Patent and Trademark Office
P.O. Box 1450
Alexandria, VA 22313-1450
www.uspto.gov

Date : October 22, 2009

Patent No. :7322276
Inventor(s) :Antonio Nicolini
Issued :January 29, 2009
Title :COFFEE DISPENSER GROUP, IN PARTICULAR FOR ESPRESSO COFFEE, FOR
:DRINKS MACHINE

Re: Request for Certificate of Correction

Consideration has been given your request for the issuance of a certificate of correction for the above-identified patent under the provisions of 37 CFR 1.322 and/or 1.323.

Assignees' names and addresses (assignment data) printed in a patent are based *solely* on information supplied in the appropriate space for identifying the assignment data, i.e., item 3 of the Fee(s) Transmittal Form PTOL-85B. After payment of the issue fee, correction of assignment data submitted on the PTOL-85B can only be done by Certificate of Correction under 37 CFR 1.323, with a request under 37 CFR 3.81(b).

A request for a patent to be corrected to state the name of the assignee must:

A. state that the assignment was submitted for recordation as set forth in 37 CFR 3.11 before issuance of the patent;

B. include a request for a certificate of correction under 37 CFR 1.323 along with the fee set forth in 37 CFR 1.20(a); and

C. include the processing fee set forth in 37 CFR 1.17(i).

If the request is granted, Certificates of Correction Branch will be notified that a Certificate of Correction may be issued.

See Manual of Patent Examining Procedure, Section 1481.01 (Rev. 3) (Oct. 2005).

Applicant has not included items A and or C above, accordingly, the request for Certificate of Correction to add or change the assignee data is dismissed.

Any request under 37 CFR 3.81(b) should be directed to the following address or facsimile number:

By mail: Mail Stop PETITIONS
Commissioner for Patents
Post Office Box 1450
Alexandria, VA 22313-1450

By hand:	Customer Service Window Randolph Building 401 Dulany Street Alexandria, VA 22314
By fax:	571-273-8300 ATTN: Office of Petitions
EFS web	uspto.gov/ebc/index.html (must be registered as an e-filer to submit responses) Technical Support 1-866-217-9197

Any inquiry concerning this communication should be directed to Ms. A. Green at (703) 756-1541.

Mary Diggs, Supervisor
Decisions & Certificates
of Correction Branch
(703) 756-1580 or (703) 756-1541

Hedman & Costigan
1185 Avenue of the Americas
New York, New York 10036

/arg

UNITED STATES PATENT AND TRADEMARK OFFICE

Commissioner for Patents
United States Patent and Trademark Office
P.O. Box 1450
Alexandria, VA 22313-1450
www.uspto.gov

HEDMAN & COSTIGAN P.C.
1185 AVENUE OF THE AMERICAS
NEW YORK NY 10036

COPY MAILED
JAN 12 2010

In re Patent No. 7,322,276	:	
Issue Date: January 29, 2008	:	
Application No. 11/075,014	:	ON PETITION
Filed: March 8, 2005	:	
Attorney Docket No. **163-613**	:	

This is a decision on the petition filed November 6, 2009, which is being treated as a petition under 37 CFR 3.81(b) to correct the name of the assignee on the front page of the above-identified patent by way of a certificate of correction.

The petition is **DISMISSED**.

Petitioner requests to correct the assignee's name by way of a certificate of correction in the name of "OFFICINE MECCANICHE F.ILL MANEA S.r.l."

37 CFR 3.81(b), effective June 25, 2004, reads:

> *After payment of the issue fee:* Any request for issuance of an application in the name of the assignee submitted after the date of payment of the issue fee, and any request for a patent to be corrected to state the name of the assignee, must state that the assignment was submitted for recordation as set forth in § 3.11 **before issuance of the patent**, and must include a request for a certificate of correction under § 1.323 of this chapter (accompanied by the fee set forth in § 1.20(a) and the processing fee set forth in § 1.17(i) of this chapter [emphasis added]. *See also* MPEP 1481.01.

U.S. Patent and Trademark Office assignment records disclose that an assignment from Reel/Frame: 016370/0714 recorded on March 21, 2005, shows the name as "OFFICINE MECCANICHE F.LLI MANEA S.r.l." not "OFFICINE MECCANICHE F.ILL MANEA S.r.l.". Accordingly, since the assignment does not show the assignee as "OFFICINE MECCANICHE F.ILL MANEA S.r.l." a certificate of correction would not be proper.

Telephone inquiries concerning this decision on petition should be directed to undersigned at (571) 272-4584.

JoAnne Burke
Petitions Examiner
Office of Petitions

UNITED STATES PATENT AND TRADEMARK OFFICE

UNITED STATES DEPARTMENT OF COMMERCE
United States Patent and Trademark Office
Address: COMMISSIONER FOR PATENTS
P.O. Box 1450
Alexandria, Virginia 22313-1450
www.uspto.gov

ROBERTS MLOTKOWSKI SAFRAN & COLE, P.C.
Intellectual Property Department
P.O. Box 10064
MCLEAN, VA 22102-8064

Mail Date: 04/20/2010

Applicant	: Ajay Asthana	: DECISION ON REQUEST FOR
Patent Number	: 7603304	: RECALCULATION of PATENT
Issue Date	: 10/13/2009	: TERM ADJUSTMENT IN VIEW
Appliction No	: 11/075,015	: OF WYETH AND NOTICE OF INTENT TO
Filed	: 03/08/2005	: ISSUE CERTIFICATE OF CORRECTION
		:

The Request for Recalculation is **GRANTED** to the extent indicated.

The patent term adjustment has been determined to be **1022** days. The USPTO will *sua sponte* issue a certificate of correction reflecting the amount of PTA days determined by the recalculation.

Prior to the issuance of the certificate of correction, the USPTO will afford patentee an opportunity to be heard and request reconsideration. Accordingly, patentee has **one month or thirty (30) days**, whichever is longer, to file a request for reconsideration of this patent term adjustment calculation. See 35 U.S.C. 154(b)(3)(B)(ii) and 37 CFR 1.322(a)(4). No extensions of time will be granted under 37 CFR 1.136.

Patentee should use document code PET.OP if electronically filing a request for reconsideration of this patent term adjustment calculation. The patentee must also include the information required by 37 CFR 1.705(b)(2) and the fee required by 37 CFR 1.18(e). If patentee does not file a timely request for reconsideration of this patent term adjustment calculation including the information required by 37 CFR 1.705(b)(2) and the fee required by 37 CFR 1.18(e), the USPTO will issue a certificate of correction reflecting the PTA determination noted above.

Patentee should be aware that in order to preserve the right to review in the United States District Court for the District of Columbia of the USPTO patent term adjustment determination, patentee must ensure that he or she also take the steps required under 35 U.S.C. 154(b)(4)(A) in a timely manner. Nothing in the request for recalculation should be construed as providing an alternative time frame for commencing a civil action under 35 U.S.C. 154(b)(4)(A).

Any questions concerning this decision should be directed to the Office of Patent Legal Administration at 571-272-7702.

UNITED STATES PATENT AND TRADEMARK OFFICE

COMMISSIONER FOR PATENTS
UNITED STATES PATENT AND TRADEMARK OFFICE
P.O. BOX 1450
ALEXANDRIA, VA 22313-1450
www.uspto.gov

GILBRETH & ASSOCIATES, P.C.
PO BOX 2428
BELLAIRE, TX 77402-2428

COPY MAILED
AUG 19 2008

In re Application of
Charles Carter Waid, et al.
Application No. 11/075,029
Filed: March 7, 2005
Attorney Docket No. 27720/02

ON PETITION

This is a decision in response to the petition, filed April 9, 2007, to revive the above-identified application under the provisions of 37 CFR 1.137(b).

The petition is **GRANTED**.

The application became abandoned for failure to reply in a timely manner to the non-final Office action mailed, May 1, 2006, which set a shortened statutory period for reply of three (3) months. No extension of time under the provisions of 37 CFR 1.136(a) was obtained. Accordingly, the application became abandoned on August 2, 2006. A Notice of Abandonment was mailed on February 20, 2007. In response, on April 9, 2007, the present petition was filed.

The petition satisfies the conditions for revival pursuant to the provisions of 37 CFR 1.137(b) in that petitioner has supplied (1) the reply in the form of an amendment; (2) the petition fee of $750; and (3) an adequate statement of unintentional delay.

The application is being referred to Technology Center AU 3711 for appropriate action by the Examiner in the normal course of business on the amendment received April 9, 2007.

Telephone inquiries concerning this decision should be directed to the undersigned at (571) 272-3204. Inquiries relating to further prosecution should be directed to the Technology Center.

Sherry D. Brinkley
Petitions Examiner
Office of Petitions

UNITED STATES PATENT AND TRADEMARK OFFICE

UNITED STATES DEPARTMENT OF COMMERCE
United States Patent and Trademark Office
Address: COMMISSIONER FOR PATENTS
P.O. Box 1450
Alexandria, Virginia 22313-1450
www.uspto.gov

SCHWEGMAN, LUNDBERG & WOESSNER, P.A.
P.O. BOX 2938
MINNEAPOLIS, MN 55402

Mail Date: 05/04/2010

Applicant	: Qinghua Li	: DECISION ON REQUEST FOR
Patent Number	: 7616704	: RECALCULATION of PATENT
Issue Date	: 11/10/2009	: TERM ADJUSTMENT IN VIEW
Application No	: 11/075,030	: OF WYETH AND NOTICE OF INTENT TO
Filed	: 03/08/2005	: ISSUE CERTIFICATE OF CORRECTION
		:

The Request for Recalculation is **GRANTED** to the extent indicated.

The patent term adjustment has been determined to be **1282** days. The USPTO will *sua sponte* issue a certificate of correction reflecting the amount of PTA days determined by the recalculation.

Prior to the issuance of the certificate of correction, the USPTO will afford patentee an opportunity to be heard and request reconsideration. Accordingly, patentee has **one month or thirty (30) days**, whichever is longer, to file a request for reconsideration of this patent term adjustment calculation. See 35 U.S.C. 154(b)(3)(B)(ii) and 37 CFR 1.322(a)(4). No extensions of time will be granted under 37 CFR 1.136.

Patentee should use document code PET.OP if electronically filing a request for reconsideration of this patent term adjustment calculation. The patentee must also include the information required by 37 CFR 1.705(b)(2) and the fee required by 37 CFR 1.18(e). If patentee does not file a timely request for reconsideration of this patent term adjustment calculation including the information required by 37 CFR 1.705(b)(2) and the fee required by 37 CFR 1.18(e), the USPTO will issue a certificate of correction reflecting the PTA determination noted above.

Patentee should be aware that in order to preserve the right to review in the United States District Court for the District of Columbia of the USPTO patent term adjustment determination, patentee must ensure that he or she also take the steps required under 35 U.S.C. 154(b)(4)(A) in a timely manner. Nothing in the request for recalculation should be construed as providing an alternative time frame for commencing a civil action under 35 U.S.C. 154(b)(4)(A).

Any questions concerning this decision should be directed to the Office of Patent Legal Administration at 571-272-7702.

UNITED STATES PATENT AND TRADEMARK OFFICE

Commissioner for Patents
United States Patent and Trademark Office
P.O. Box 1450
Alexandria, VA 22313-1450
www.uspto.gov

BEN WANG
706 COLORADO AVE
PALO ALTO CA 94303

COPY MAILED

JAN 12 2007

OFFICE OF PETITIONS

In re Application of	:	
Peng et al.	:	
Application No. 11/075,035	:	ON PETITION
Filed: March 7, 2005	:	
Attorney Docket No. SB2005-01US	:	

This is a decision on the petition under 37 C.F.R. § 1.137(b), filed October 24, 2006, to revive the above-identified application.

The petition is **GRANTED.**

The petition satisfies the conditions for revival pursuant to the provisions of 37 CFR 1.137(b) in that (1) the reply in the form of an Amendment; (2) the petition fee; and (3) the required statement of unintentional delay have been received. Accordingly, the response has been accepted as having been unintentionally delayed.

This matter is being referred to Technology Center 1600 for further examination on the merits.

Telephone inquiries regarding this decision should be directed to the undersigned at (571) 272-3206.

Liana Walsh
Petitions Examiner
Office of Petitions

UNITED STATES PATENT AND TRADEMARK OFFICE

Commissioner for Patents
United States Patent and Trademark Office
P.O. Box 1450
Alexandria, VA 22313-1450
www.uspto.gov

BROOKS KUSHMAN P.C.
1000 TOWN CENTER
TWENTY-SECOND FLOOR
SOUTHFIELD MI 48075

COPY MAILED

OCT 28 2008

OFFICE OF PETITIONS

In re Application of	:	
Richard M. Laine et al	:	
Application No. 11/075,042	:	DECISION ON PETITION
Filed: March 8, 2005	:	
Attorney Docket No. UOM 0343 PUSP	:	

This is a decision on the petition under the unintentional provisions of 37 CFR 1.137(b), filed August 14, 2008, to revive the above-identified application.

The petition is **GRANTED**.

The petition satisfies the conditions for revival pursuant to the provisions of 37 CFR 1.137(b) in that (1) the reply in the form of an response/election; (2) the petition fee; and (3) the required statement of unintentional delay have been received. Accordingly, the reply to the restriction requirement mailed December 17, 2007, is accepted as having been unintentionally delayed.

The petition is not signed by an attorney of record. However, in accordance with 37 CFR 1.34, the signature of Mr. Lee Cheng appearing on the correspondence shall constitute a representation to the United States Patent and Trademark Office that he is authorized to represent the particular party in whose behalf he acts. If, Mr. Cheng desires to receive correspondence regarding this file, the appropriate power of attorney documents must be submitted. A courtesy copy of this decision is being mailed to Mr. Cheng, the petitioner herein. However, until otherwise instructed, all future correspondence regarding this application file will be directed solely to the above-noted correspondence address of record.

Telephone inquiries concerning this decision should be directed to the undersigned at (571) 272-3208.

This application is being referred to Technology Center AU 1796 for appropriate action by the Examiner in the normal course of business on the reply received August 14, 2008.

Karen Creasy

Karen Creasy
Petitions Examiner
Office of Petitions

cc:

LEE CHENG
1100 17TH STREET N.W., SUITE 503
WASHINGTON DC 20036

UNITED STATES PATENT AND TRADEMARK OFFICE

Commissioner for Patents
United States Patent and Trademark Office
P.O. Box 1450
Alexandria, VA 22313-1450
www.uspto.gov

Carr & Ferrell, LLP
2200 Geng Road
Palo Alto, CA 94303

COPY MAILED

JUN 0 5 2009

OFFICE OF PETITIONS

In re Application of	:	
Peter Zenon Onufryk et al.	:	
Application No. 11/075,049	:	DECISION ON PETITION
Filed: March 7, 2005	:	TO WITHDRAW
Attorney Docket No. PA2794US	:	FROM RECORD
	:	

This is a decision on the Request to Withdraw as attorney or agent of record under 37 C.F.R. § 1.36(b), filed March 13, 2006.

The request is **moot because a revocation of power of attorney has been filed**.

A review of the file record indicates that the power of attorney to V. Randall Gard and all attorneys/agents of record has been revoked by the assignee of the patent application on June 2, 2006 and resubmitted on August 14, 2006. Accordingly, the request to withdraw under 37 C.F.R. § 1.36(b) is moot.

All future communications from the Office will continue to be directed to the below-listed address until otherwise notified by applicant.

Telephone inquires concerning this decision should be directed to Kimberly Inabinet at 571-272-4618.

Kimberly Inabinet
Petitions Examiner
Office of Petitions

cc: **Michael Blaine Brooks, P.C.**
P.O. Box 1630
Simi Valley, CA 93062-1630

UNITED STATES PATENT AND TRADEMARK OFFICE

Commissioner for Patents
United States Patent and Trademark Office
P.O. Box 1450
Alexandria, VA 22313-1450
www.uspto.gov

CHRISTOPHER C. WINSLADE
MCANDREWS, HELD & MALLOY, LTD.
34TH FLOOR
500 WEST MADISON ST.
CHICAGO, IL 60661

RECEIVED
JAN 05 2009
OFFICE OF PETITIONS

In re Application of
Jason Hillyard
Application No. 11/075,052
Filed: March 8, 2005
Attorney Docket No. 16060US01

ON PETITION

This is a decision on the petition, filed December 31, 2008 under 37 CFR 1.313(c)(2) to withdraw the above-identified application from issue after payment of the issue fee.

The petition is **GRANTED**.

The above-identified application is withdrawn from issue for consideration of a submission under 37 CFR 1.114 (request for continued examination). See 37 CFR 1.313(c)(2).

Petitioner is advised that the issue fee paid on December 4, 2008 in the above-identified application cannot be refunded. If, however, the above-identified application is again allowed, petitioner may request that it be applied towards the issue fee required by the new Notice of Allowance.[1]

Telephone inquiries should be directed to Irvin Dingle at (571) 272-3210.

This matter is being referred to Technology Center AU 2618 for processing of the request for continued examination under 37 CFR 1.114 and for consideration of the concurrently filed Information Disclosure Statement.

/Irvin Dingle/
Irvin Dingle
Petitions Examiner
Office of Petitions

---

[1] The request to apply the issue fee to the new Notice may be satisfied by completing and returning the new Issue Fee Transmittal Form PTOL-85(b), which includes the following language thereon: Commissioner for Patents is requested to apply the Issue Fee and Publication Fee (if any) or re-apply any previously paid issue fee to the application identified above. Petitioner is advised that, whether a fee is indicated as being due or not, the Issue Fee Transmittal Form **must** be completed and timely submitted to avoid abandonment. Note the language in bold text on the first page of the Notice of Allowance and Fee(s) Due (PTOL-85).

UNITED STATES PATENT AND TRADEMARK OFFICE

Commissioner for Patents
United States Patent and Trademark Office
P.O. Box 1450
Alexandria, VA 22313-1450
www.uspto.gov

TAKEDA SAN DIEGO, INC.
10410 SCIENCE CENTER DRIVE
SAN DIEGO CA 92121

COPY MAILED

NOV 14 2007

OFFICE OF PETITIONS

In re Application of :
Ciaran N. Cronin et al :
Application No. 11/075,058 : DECISION ON PETITION
Filed: March 7, 2005 :
Attorney Docket No. :
SYR-MEK2-5001-U

This is a decision on the petition under 37 CFR 1.137(b), filed November 9, 2007, to revive the above-identified application.

The petition is **GRANTED.**

The application became abandoned by operation of law for failure to reply in a timely manner to the non-final Office action mailed May 4, 2007, which set a shortened statutory period for reply of three (3) months. No extensions of time were obtained under the provisions of 37 CFR 1.136(a). Accordingly, the application became abandoned on August 5, 2007.

The petition satisfies the requirements of 37 CFR 1.137(b) in that petitioner has supplied (1) a reply in the form of, *inter alia*, an amendment, (2) the petition fee of $1,540, and (3) a proper statement of unintentional delay. Accordingly, the failure to timely reply to the non-final Office action of May 4, 2007 is accepted as being unintentionally delayed.

An extension of time under 37 CFR 1.136 must be filed prior to the expiration of the maximum extendable period for reply. *See* In re Application of S., 8 USPQ2d 1630, 1631 (Comm'r Pats. 1988). Since the $1,050 extension of time fee submitted with the petition on November 9, 2007 was subsequent to the maximum extendable period for reply, this fee is unnecessary and will be credited to petitioner's deposit account in due course.

This application is being referred to Technology Center AU 1656 for appropriate action in the normal course of business on the reply received November 9, 2007.

Telephone inquiries concerning this decision should be directed to the undersigned at (571) 272-3218.

Frances Hicks
Petitions Examiner
Office of Petitions

BEST AVAILABLE COPY

UNITED STATES PATENT AND TRADEMARK OFFICE

UNITED STATES DEPARTMENT OF COMMERCE
United States Patent and Trademark Office
Address: COMMISSIONER FOR PATENTS
P.O. Box 1450
Alexandria, Virginia 22313-1450
www.uspto.gov

APPL NO.	FILING OR 371 (c) DATE	ART UNIT	FIL FEE REC'D	ATTY.DOCKET NO	DRAWINGS	TOT CLMS	IND CLMS
11/075,080	03/08/2005	2643	500	N1919	3	20	3

CONFIRMATION NO. 2922

CORRECTED FILING RECEIPT

OC000000015951498

23456
WADDEY & PATTERSON
414 UNION STREET, SUITE 2020
BANK OF AMERICA PLAZA
NASHVILLE, TN 37219

Date Mailed: 05/05/2005

Receipt is acknowledged of this regular Patent Application. It will be considered in its order and you will be notified as to the results of the examination. Be sure to provide the U.S. APPLICATION NUMBER, FILING DATE, NAME OF APPLICANT, and TITLE OF INVENTION when inquiring about this application. Fees transmitted by check or draft are subject to collection. Please verify the accuracy of the data presented on this receipt. **If an error is noted on this Filing Receipt, please mail to the Commissioner for Patents P.O. Box 1450 Alexandria Va 22313-1450. Please provide a copy of this Filing Receipt with the changes noted thereon. If you received a "Notice to File Missing Parts" for this application, please submit any corrections to this Filing Receipt with your reply to the Notice. When the USPTO processes the reply to the Notice, the USPTO will generate another Filing Receipt incorporating the requested corrections (if appropriate).**

Applicant(s)

Paul Griffin, Nashville, TN;

Power of Attorney: None

Domestic Priority data as claimed by applicant

Foreign Applications

If Required, Foreign Filing License Granted: 03/30/2005

The country code and number of your priority application, to be used for filing abroad under the Paris Convention, is US11/075,080

Projected Publication Date: Request for Non-Publication Acknowledged

Non-Publication Request: Yes

Early Publication Request: No

**** SMALL ENTITY ****

Title

BEST AVAILABLE COPY

Earpiece adapter for an earphone or a headphone

Preliminary Class

381

LICENSE FOR FOREIGN FILING UNDER
Title 35, United States Code, Section 184
Title 37, Code of Federal Regulations, 5.11 & 5.15

GRANTED

The applicant has been granted a license under 35 U.S.C. 184, if the phrase "IF REQUIRED, FOREIGN FILING LICENSE GRANTED" followed by a date appears on this form. Such licenses are issued in all applications where the conditions for issuance of a license have been met, regardless of whether or not a license may be required as set forth in 37 CFR 5.15. The scope and limitations of this license are set forth in 37 CFR 5.15(a) unless an earlier license has been issued under 37 CFR 5.15(b). The license is subject to revocation upon written notification. The date indicated is the effective date of the license, unless an earlier license of similar scope has been granted under 37 CFR 5.13 or 5.14.

This license is to be retained by the licensee and may be used at any time on or after the effective date thereof unless it is revoked. This license is automatically transferred to any related applications(s) filed under 37 CFR 1.53(d). This license is not retroactive.

The grant of a license does not in any way lessen the responsibility of a licensee for the security of the subject matter as imposed by any Government contract or the provisions of existing laws relating to espionage and the national security or the export of technical data. Licensees should apprise themselves of current regulations especially with respect to certain countries, of other agencies, particularly the Office of Defense Trade Controls, Department of State (with respect to Arms, Munitions and Implements of War (22 CFR 121-128)); the Office of Export Administration, Department of Commerce (15 CFR 370.10 (j)); the Office of Foreign Assets Control, Department of Treasury (31 CFR Parts 500+) and the Department of Energy.

NOT GRANTED

No license under 35 U.S.C. 184 has been granted at this time, if the phrase "IF REQUIRED, FOREIGN FILING LICENSE GRANTED" DOES NOT appear on this form. Applicant may still petition for a license under 37 CFR 5.12, if a license is desired before the expiration of 6 months from the filing date of the application. If 6 months has lapsed from the filing date of this application and the licensee has not received any indication of a secrecy order under 35 U.S.C. 181, the licensee may foreign file the application pursuant to 37 CFR 5.15(b).

UNITED STATES PATENT AND TRADEMARK OFFICE

Commissioner for Patents
United States Patent and Trademark Office
P.O. Box 1450
Alexandria, VA 22313-1450
www.uspto.gov

TOWNSEND AND TOWNSEND AND CREW, LLP
TWO EMBARCADERO CENTER
EIGHTH FLOOR
SAN FRANCISCO, CA 94111-3834

COPY MAILED

AUG 16 2006

OFFICE OF PETITIONS

In re Application of	:	
Jin-Long CHEN	:	
Application No. 11/075,090	:	DECISION ON PETITION
Filed: March 7, 2005	:	TO WITHDRAW
Attorney Docket No. 018781-010810US	:	FROM RECORD
	:	

This is a decision on the Request to Withdraw as attorney or agent of record under 37 C.F.R. § 1.36(b), filed August 18, 2005.

The request is **NOT APPROVED** as moot.

A review of the file record indicates that the power of attorney to William B. Kazer has been revoked by the assignee of the patent application on February 13, 2006. Accordingly, the request to withdraw under 37 C.F.R. § 1.36(b) is moot.

All future communications from the Office will continue to be directed to the below-listed address until otherwise notified by applicant.

Telephone inquires concerning this decision should be directed to Monica A. Graves at 571-272-7253.

Amelia Au
Petitions Examiner
Office of Petitions

cc: AMGEN INC.
1120 VETERANS BOULEVARD
SOUTH SAN FRANCISCO CA 94080

UNITED STATES PATENT AND TRADEMARK OFFICE

Commissioner for Patents
United States Patent and Trademark Office
Washington, D.C. 20231
www.uspto.gov

LEONARD A. ALKOV, ESQ.
RAYTHEON COMPANY
P.O. BOX 902 (E4/N119)
EL SEGUNDO CA 90245-0902

COPY MAILED

MAR 07 2008

OFFICE OF PETITIONS

In re Application of :
William W. Milroy et al. :
Application No. 11/075,106 :
Filed: March 8, 2005 :
Attorney Docket No. PD-02W161 :

ON PETITION

This is a decision on the petition filed February 13, 2008, under 37 CFR 1.181(b), to withdraw the holding of abandonment, in accordance with the reasoning of the decision in Delgar Inc. v. Schuyler, 172 USPQ 513.

The petition is **GRANTED**.

This application became abandoned for failure to pay the issue fee on or before December 7, 2007 as was required by the Notice of Allowance mailed September 7, 2007. This application therefore became abandoned on December 10, 2007. Accordingly, a Notice of Abandonment was sent via email notification on January 4, 2008.

The file record discloses that the Notice of Allowance was mailed to the address of record, the same address to which the Notice of Abandonment was mailed. However, petitioner contends that the Notice of Allowance was not received. In support, petitioner indicates that a search of the docketing system and file jacket revealed that the Notice was not received and submits copies of pages from docketing system, wherein receipt of the Notice would have been entered, had it been received to substantiate the claim. The statement and attachments corroborate non-receipt of the Notice of Allowance.

In view of the facts set forth in the petition, it is concluded that the Notice of Allowance was never received. Accordingly, the holding of abandonment is withdrawn. No petition fee is due and none has been charged.

This matter is being referred to Technology Center 2821 for a re-sending of the Notice of Allowance and Notice of Allowability.

Telephone inquiries concerning this matter should be directed to the undersigned Petitions Attorney at (571) 272-3212.

Patricia Faison-Ball

Patricia Faison-Ball
Senior Petitions Attorney
Office of Petitions

SPE RESPONSE FOR CERTIFICATE OF CORRECTION

Paper No.: _____

DATE : 07/14/09

TO SPE OF : ART UNIT 1633

SUBJECT : Request for Certificate of Correction for Appl. No.: 11075113 Patent No.: 7547774 B2

Please respond to this request for a certificate of correction within 7 days.

FOR IFW FILES:

Please review the requested changes/corrections as shown in the **COCIN** document(s) in the IFW application image. No new matter should be introduced, nor should the scope or meaning of the claims be changed.

Please complete the response (see below) and forward the completed response to scanning using document code **COCX**.

FOR PAPER FILES:

Please review the requested changes/corrections as shown in the attached certificate of correction. Please complete this form (see below) and forward it with the file to:

Certificates of Correction Branch (C of C)
Randolph Square 9D40-D
Palm Location 7580

You can fax the Directors/SPE response to 571-270-9990

Lamonte Newsome
Certificates of Correction Branch
703-756-1574

Thank You For Your Assistance

The request for issuing the above-identified correction(s) is hereby:
Note your decision on the appropriate box.

☒ **Approved**	**All** changes apply.
☐ **Approved in Part**	Specify below which changes **do not** apply.
☐ **Denied**	State the reasons for denial below.

Comments: _____

SPE

1633
Art Unit

UNITED STATES PATENT AND TRADEMARK OFFICE

Commissioner for Patents
United States Patent and Trademark Office
P.O. Box 1450
Alexandria, VA 22313-1450
www.uspto.gov

FULBRIGHT & JAWORSKI L.L.P.
666 FIFTH AVENUE
NEW YORK, NY 10103

DEC 05 2005

In re Application of:	:	
GESHWIND et al.	:	DECISION ON PETITION
Serial No.: 11/075,114	:	TO MAKE SPECIAL
Filed: March 07, 2005	:	
Attorney's Docket No.: **PSS 211.1**	:	

This is a decision on the petition under 37 C.F.R. § 1.102(c), filed July 11 2005, to make the above-identified application special.

Petitioner requests that the above-identified application be made special under the accelerated examination procedure set forth in the Manual of Patent Examining Procedure (M.P.E.P.) § 708.02, Section IV, Applicant's Age.

A grantable petition to make special under 37 C.F.R. § 1.102, and in accordance with M.P.E.P. § 708.02, Section IV, must include evidence showing that the applicant is sixty five (65) years of age or more. No fee is required for this petition.

The petition includes a copy of the passport from applicant, William G. Fateley stating that he is sixty-five (65) years of age or more.

Accordingly, the petition is GRANTED.

The application is being forwarded to the examiner for expedited prosecution. If the examiner can make this application special without prejudice to any possible interfering applications, and s/he should make a rigid search for such, s/he is authorized to do so for the next action. Should the application be rejected, the application will not be considered special for the subsequent action unless the applicant promptly makes a bona fide effort to place the application in condition for allowance, even if it is necessary to have an interview with the examiner to accomplish this purpose.

If the examiner finds any interfering application for the same subject matter, s/he should consider such application simultaneously with this application and should state in the official letter of such application that s/he is taking it out of its turn because of possible interference.

Should an appeal be taken in this application or should this application become involved in an interference, consideration of the appeal and the interference will be expedited by all Patent and

Trademark Office officials concerned, contingent likewise upon diligent prosecution by the applicant.

After allowance, this application will be given priority for printing. See M.P.E.P. § 1309.

Inquiries regarding this decision should be directed to Jose Dees at (571) 272-1569.

Jose Dees, Special Programs Examiner
Technology Center 2800
Semiconductors, Electrical and Optical
Systems and Components

UNITED STATES PATENT AND TRADEMARK OFFICE

UNITED STATES DEPARTMENT OF COMMERCE
United States Patent and Trademark Office
Address: COMMISSIONER FOR PATENTS
P.O. Box 1450
Alexandria, Virginia 22313-1450
www.uspto.gov

WORKMAN NYDEGGER/Leica
1000 Eagle Gate Tower
60 East South Temple
Salt Lake City, UT 84111

Mail Date: 04/20/2010

Applicant	: Jeffrey Minoru Adachi	: DECISION ON REQUEST FOR
Patent Number	: 7643966	: RECALCULATION of PATENT
Issue Date	: 01/05/2010	: TERM ADJUSTMENT IN VIEW
Appliction No	: 11/075,167	: OF WYETH AND NOTICE OF INTENT TO
Filed	: 03/08/2005	: ISSUE CERTIFICATE OF CORRECTION
		:

The Request for Recalculation is **GRANTED** to the extent indicated.

The patent term adjustment has been determined to be **700** days. The USPTO will *sua sponte* issue a certificate of correction reflecting the amount of PTA days determined by the recalculation.

Prior to the issuance of the certificate of correction, the USPTO will afford patentee an opportunity to be heard and request reconsideration. Accordingly, patentee has **one month or thirty (30) days**, whichever is longer, to file a request for reconsideration of this patent term adjustment calculation. See 35 U.S.C. 154(b)(3)(B)(ii) and 37 CFR 1.322(a)(4). No extensions of time will be granted under 37 CFR 1.136.

Patentee should use document code PET.OP if electronically filing a request for reconsideration of this patent term adjustment calculation. The patentee must also include the information required by 37 CFR 1.705(b)(2) and the fee required by 37 CFR 1.18(e). If patentee does not file a timely request for reconsideration of this patent term adjustment calculation including the information required by 37 CFR 1.705(b)(2) and the fee required by 37 CFR 1.18(e), the USPTO will issue a certificate of correction reflecting the PTA determination noted above.

Patentee should be aware that in order to preserve the right to review in the United States District Court for the District of Columbia of the USPTO patent term adjustment determination, patentee must ensure that he or she also take the steps required under 35 U.S.C. 154(b)(4)(A) in a timely manner. Nothing in the request for recalculation should be construed as providing an alternative time frame for commencing a civil action under 35 U.S.C. 154(b)(4)(A).

Any questions concerning this decision should be directed to the Office of Patent Legal Administration at 571-272-7702.

UNITED STATES PATENT AND TRADEMARK OFFICE

Commissioner for Patents
United States Patent and Trademark Office
P.O. Box 1450
Alexandria, VA 22313-1450
www.uspto.gov

COPY MAILED

AUG 2 0 2007

OFFICE OF PETITIONS

WOODCOCK WASHBURN LLP
CIRA CENTRE, 12TH FLOOR
2929 ARCH STREET
PHILADELPHIA PA 19104-2891

In re Application of	:	
Spiridon Spireas	:	
Application No. 11/075,170	:	DECISION ON PETITION
Filed: March 8, 2005	:	TO WITHDRAW
Attorney Docket No. MPCI-0140	:	FROM RECORD
	:	

This is a decision on the Request to Withdraw as attorney or agent of record under 37 C.F.R. § 1.36(b) filed April 19, 2007.

The request is **NOT APPROVED**.

A grantable request to withdraw as attorney/agent of record must be signed by every attorney/agent seeking to withdraw or contain a clear indication that one attorney is signing on behalf of another/others. A request to withdraw will not be approved unless at least 30 (thirty) days would remain between the date of approval and the later of the expiration date of a time to file a response or the expiration date of the maximum time period which can be extended under 37 C.F.R. § 1.136(a).

The Office cannot approve the request at this time since the reasons provided do not meet any of the conditions under the mandatory or permissive categories enumerated in 37 CFR 10.40. Section 10.40 of Title 37 of the Code of Federal Regulation states, "[a] practitioner shall not withdraw from employment in a proceeding before the Office without permission from the Office[.]" More specifically, 37 CFR 10.40 states, "[i]f paragraph (b) of this section is not applicable, a practitioner may not request permission to withdraw in matter pending before the Office unless such request or such withdrawal is" for one the permissive reasons listed in 37 CFR 10.40(c). The reasons set forth in the request, "transfer of responsibility", does not meet any of the conditions set forth in 37 CFR 10.40.

In order to request or take action in a patent matter, the assignee must establish its ownership of the patent to the satisfaction of the Director. In this regard, a Statement under 37 CFR 3.73(b) must have either: (i) documentary evidence of a chain of title from the original owner to the assignee (*e.g.*, copy of an executed assignment), and a statement affirming that the documentary evidence of the chain of title from the original owner to the assignee was or concurrently is being

submitted for recordation pursuant to § 3.11; or (ii) a statement specifying where documentary evidence of a chain of title from the original owner to the assignee is recorded in the assignment records of the Office (*e.g.*, reel and frame number).

All future communications from the Office will continue to be directed to the above-listed address until otherwise notified by applicant.

Telephone inquiries concerning this decision should be directed to undersigned at 571-272-1642.

April M. Wise
Petitions Examiner
Office of Petitions

cc: BRENDAN MAGRAB, ESQUIRE
VICE PRESIDENT AND GENERAL COUNSEL
MUTUAL PHARMACEUTICAL COMPANY, INC.
1100 ORTHODOX STREET
PHILADELPHIA, PA 19124

UNITED STATES PATENT AND TRADEMARK OFFICE

Commissioner for Patents
United States Patent and Trademark Office
P.O. Box 1450
Alexandria, VA 22313-1450
www.uspto.gov

WOODCOCK WASHBURN LLP
CIRA CENTRE, 12TH FLOOR
2929 ARCH STREET
PHILADELPHIA PA 19104-2891

COPY MAILED

JAN 23 2008

OFFICE OF PETITIONS

In re Application of	:	
Spiridon Spireas	:	
Application No. 11/075,170	:	DECISION ON PETITION
Filed: March 8, 2005	:	TO WITHDRAW
Attorney Docket No. MPCI-0140	:	FROM RECORD
	:	

This is a decision on the Request to Withdraw as attorney or agent under 37 C.F.R. § 1.36(b) or 37 C.F.R. § 10.40 filed September 14, 2007.

The request is **APPROVED**.

A review of the file record indicates that Woodcock Washburn, LLP: (1) does not have power of attorney in this patent application; and (2) has been employed or otherwise engaged in the proceedings in this patent application. In view of the present decision, Woodcock Washburn, LLP has/have been withdrawn from the present application and may not prepare or submit papers under 37 C.F.R. § 1.34, or correspond in any manner in this application unless appointed in an acceptable power of attorney under 37 C.F.R. § 1.32(b).

The request to change the correspondence of record is not acceptable as the requested correspondence address is not that of: (1) the first named signing inventor; or (2) the intervening assignee of the entire interest. All future communications from the Office will be directed to the first named signing inventor at the first copied address below until otherwise properly notified by the applicant.

In order to request or take action in a patent matter, the assignee must establish its ownership of the patent to the satisfaction of the Director. In this regard, a Statement under 37 CFR 3.73(b) must have either: (i) documentary evidence of a chain of title from the original owner to the assignee (e.g., copy of an executed assignment), and a statement affirming that the documentary evidence of the chain of title from the original owner to the assignee was or concurrently is being submitted for recordation pursuant to § 3.11; or (ii) a statement specifying where documentary evidence of a chain of title from the original owner to the assignee is recorded in the assignment records of the Office (e.g., reel and frame number).

Applicant is reminded that there is no attorney of record at this time.

There are no pending Office actions at the present time.

Telephone inquires concerning this decision should be directed to undersigned at 571-272-1642.

April M. Wise
Petitions Examiner
Office of Petitions

cc: SPIRIDON SPIREAS
15 EAGLETON FARMS ROAD
NEWTON, PA 18940

cc: BRENDAN MAGRAB, ESQUIRE
VICE PRESIDENT AND GENERAL COUNSEL
MUTUAL PHARMACEUTICAL COMPANY, INC.
100 ORTHODOX STREET
PHILADELPHIA, PA 19124

UNITED STATES PATENT AND TRADEMARK OFFICE

UNITED STATES DEPARTMENT OF COMMERCE
United States Patent and Trademark Office
Address: COMMISSIONER FOR PATENTS
P.O. Box 1450
Alexandria, Virginia 22313-1450
www.uspto.gov

APPLICATION NUMBER	FILING OR 371(C) DATE	FIRST NAMED APPLICANT	ATTY. DOCKET NO./TITLE
11/075,170	03/08/2005	Spiridon Spireas	MPCI-0140

CONFIRMATION NO. 4437

POWER OF ATTORNEY NOTICE

23377
WOODCOCK WASHBURN LLP
CIRA CENTRE, 12TH FLOOR
2929 ARCH STREET
PHILADELPHIA, PA 19104-2891

OC000000027843069

Date Mailed: 01/22/2008

NOTICE REGARDING CHANGE OF POWER OF ATTORNEY

This is in response to the Power of Attorney filed 09/14/2007.

- The withdrawal as attorney in this application has been accepted. Future correspondence will be mailed to the new address of record. 37 CFR 1.33.

/amwise/

Office of Initial Patent Examination (571) 272-4000 or 1-800-PTO-9199

UNITED STATES PATENT AND TRADEMARK OFFICE

Commissioner for Patents
United States Patent and Trademark Office
P.O. Box 1450
Alexandria, VA 22313-1450
www.uspto.gov

COPY MAILED

NOV 10 2009

OFFICE OF PETITIONS

CANTOR COLBURN, LLP
20 Church Street
22nd Floor
Hartford, CT 06103

In re Application of Spireas :
Application No. 11/075,170 : Decision on Petition
Filing Date: March 8, 2005 :
Attorney Docket No. MPC-0176US :

This is a decision on the petition under 37 CFR 1.137(b), filed June 4, 2009, to revive the above-identified application.

The petition is **granted**.

The Office mailed a non-final Office action on November 17, 2008. The Office action set a shortened statutory period for reply of three (3) months.

Petitioner filed two continuation applications (Application Nos. 12/466,644 and 12/466,562) on May 15, 2009. Unfortunately, petitioner failed to pay the three-month extension of time fee to extend the due date for reply in the instant application.[1] As a result, the instant application became abandoned on February 18, 2009. A Notice of Abandonment was mailed June 3, 2009.

A grantable petition under 37 CFR 1.137(b) must be accompanied by:

(1) The reply required to the outstanding Office action or notice, unless previously filed,
(2) The petition fee,
(3) A statement that the entire delay in filing the required reply from the due date for the reply until the filing of a grantable petition pursuant to 37 CFR 1.137(b) was unintentional, and
(4) A terminal disclaimer and fee if the application was filed on or before June 8, 1995 or if the application is a design application.

As to item (1), 37 CFR 1.137(c) states, "the required reply may be met by the filing of a continuing application." Petitioner has filed and identified two continuation applications.

As to item (2), petitioner has filed the required petition fee of $810.

[1] The extended due date would have been May 18, 2009, since May 17, 2009 fell on a Sunday.

As to item (3), petitioner has stated the entire delay in filing the required reply from the due date for the reply until the filing of a grantable petition pursuant to 37 CFR 1.137(b) was unintentional.

As to item (4), a terminal disclaimer is not necessary because the application is a utility application filed after June 8, 1995, and also because the petition is filed solely for purposes of establishing copendency with continuing applications.

Petitioner has met the requirements to revive the above-identified application pursuant to 37 CFR 1.137(b). Therefore, the petition is granted and the application is revived.

Since this application is being revived for purposes of continuity only and since continuity has been established by this decision reviving the application, the application is again abandoned in favor of Application Nos. 12/466,544 and 12/466,562. The new date of abandonment for the instant application is the mail date of this decision.

Payment for an extension of time is unnecessary when reviving an application and the extension of time fee of $555 has been credited back to petitioner's deposit account.

Telephone inquiries regarding this communication should be directed to Petitions Attorney Steven Brantley at (571) 272-3203.

Charles Steven Brantley
Senior Petitions Attorney
Office of Petitions

UNITED STATES PATENT AND TRADEMARK OFFICE

UNITED STATES DEPARTMENT OF COMMERCE
United States Patent and Trademark Office
Address: COMMISSIONER FOR PATENTS
P.O. Box 1450
Alexandria, Virginia 22313-1450
www.uspto.gov

PHILIPS INTELLECTUAL PROPERTY & STANDARDS
P.O. BOX 3001
BRIARCLIFF MANOR, NY 10510

Mail Date: 04/21/2010

Applicant	: Michael R. Miller	: DECISION ON REQUEST FOR
Patent Number	: 7600888	: RECALCULATION of PATENT
Issue Date	: 10/13/2009	: TERM ADJUSTMENT IN VIEW
Appliction No	: 11/075,176	: OF WYETH AND NOTICE OF INTENT TO
Filed	: 03/08/2005	: ISSUE CERTIFICATE OF CORRECTION
		:

The Request for Recalculation is **GRANTED** to the extent indicated.

The patent term adjustment has been determined to be **76** days. The USPTO will *sua sponte* issue a certificate of correction reflecting the amount of PTA days determined by the recalculation.

Prior to the issuance of the certificate of correction, the USPTO will afford patentee an opportunity to be heard and request reconsideration. Accordingly, patentee has **one month or thirty (30) days**, whichever is longer, to file a request for reconsideration of this patent term adjustment calculation. See 35 U.S.C. 154(b)(3)(B)(ii) and 37 CFR 1.322(a)(4). No extensions of time will be granted under 37 CFR 1.136.

Patentee should use document code PET.OP if electronically filing a request for reconsideration of this patent term adjustment calculation. The patentee must also include the information required by 37 CFR 1.705(b)(2) and the fee required by 37 CFR 1.18(e). If patentee does not file a timely request for reconsideration of this patent term adjustment calculation including the information required by 37 CFR 1.705(b)(2) and the fee required by 37 CFR 1.18(e), the USPTO will issue a certificate of correction reflecting the PTA determination noted above.

Patentee should be aware that in order to preserve the right to review in the United States District Court for the District of Columbia of the USPTO patent term adjustment determination, patentee must ensure that he or she also take the steps required under 35 U.S.C. 154(b)(4)(A) in a timely manner. Nothing in the request for recalculation should be construed as providing an alternative time frame for commencing a civil action under 35 U.S.C. 154(b)(4)(A).

Any questions concerning this decision should be directed to the Office of Patent Legal Administration at 571-272-7702.

UNITED STATES PATENT AND TRADEMARK OFFICE

Commissioner for Patents
United States Patent and Trademark Office
P.O. Box 1450
Alexandria, VA 22313-1450
www.uspto.gov

HARNESS, DICKEY & PIERCE, P.L.C.
P.O. BOX 828
BLOOMFIELD HILLS MI 48303

COPY MAILED

MAR 0 1 2007

OFFICE OF PETITIONS

In re Application of
Yahnker, et al.
Application No. 11/075,179
Filed: March 8, 2005
Attorney Docket No. 0275A-000885

DECISION ON PETITIONS
UNDER 37 CFR 1.78(a)(3) AND (a)(6)

This is a decision on the petitions under 37 CFR §§ 1.78(a)(3) and 1.78(a)(6), filed August 25, 2006, to accept an unintentionally delayed claim under 35 U.S.C. §§120 and 119(e) for the benefit of the prior-filed applications set forth in the concurrently filed amendment.

The petitions are **GRANTED.**

A petition for acceptance of a claim for late priority under 37 CFR §§ 1.78(a)(3) and 1.78(a)(6) is only applicable to those applications filed on or after November 29, 2000. Further, the petition is appropriate only after the expiration of the period specified in 37 CFR §§ 1.78(a)(2)(ii) and 1.78(a)(5)(ii). In addition, the petition under 37 CFR §§ 1.78(a)(3) and 1.78(a)(6) must be accompanied by:

(1) the reference required by 35 U.S.C. §§ 120 and 119(e) and 37 CFR §§ 1.78(a)(2)(i) and 1.78(a)(5)(i) of the prior-filed application, unless previously submitted;
(2) the surcharge set forth in § 1.17(t); and
(3) a statement that the entire delay between the date the claim was due under 37 CFR §§ 1.78(a)(2)(ii) and 1.78(a)(5)(ii) and the date the claim was filed was unintentional. The Director may require additional information where there is a question whether the delay was unintentional.

Additionally, the instant nonprovisional application must be pending at the time of filing of the reference to the prior-filed provisional application as required by 37 CFR 1.78(a)(5)(ii). Further, the nonprovisional application claiming the benefit of the prior-filed provisional application must have been filed within twelve months of the filing date of the prior-filed provisional application. All the above requirements having been satisfied, the late claim for benefit of priority under 35 U.S.C. §§ 120 and 119(e) is accepted as being unintentionally delayed.

The granting of the petition to accept the delayed benefit claim to the prior-filed applications under 37 CFR §§ 1.78(a)(3) and 1.78(a)(6) should not be construed as meaning that this application is entitled to the benefit of the filing date of the prior-filed applications. In order for this application to be entitled to the benefit of the prior-filed applications, all other requirements under 35 U.S.C. §§120 and 1.78(a)(1) and (a)(2) and under 35 U.S.C. §119(e) and 37 CFR 1.78(a)(4) and (a)(5) must be met. Similarly, the fact that the corrected Filing Receipt accompanying this decision on petition includes the prior-filed applications should not be construed as meaning that applicant is entitled to the claim for benefit of priority to the prior-filed applications noted thereon. Accordingly, the examiner will, in due course, consider this benefit claim and determine whether the application is entitled to the benefit of the earlier filing date.

A corrected Filing Receipt, which includes the priority claim to the prior-filed applications, accompanies this decision on petition.

Any questions concerning this matter may be directed to Petitions Attorney Alesia M. Brown at (571) 272-3205. All other inquiries concerning either the examination procedures or status of the application should be directed to the Technology Center.

This application is being forwarded to Technology Center Art Unit 1745 for consideration by the examiner of the claim under 35 U.S.C. § §120 and 119(e) of the prior-filed nonprovisional and provisional applications.

Christina Tartera Donnell for
Frances Hicks
Lead Petitions Examiner
Office of Petitions

ATTACHMENT : Corrected Filing Receipt

UNITED STATES PATENT AND TRADEMARK OFFICE

UNITED STATES DEPARTMENT OF COMMERCE
United States Patent and Trademark Office
Address: COMMISSIONER FOR PATENTS
P.O. Box 1450
Alexandria, Virginia 22313-1450
www.uspto.gov

APPL NO.	FILING OR 371 (c) DATE	ART UNIT	FIL FEE REC'D	ATTY.DOCKET NO	DRAWINGS	TOT CLMS	IND CLMS
11/075,179	03/08/2005	1745	2330	0275A-000885	13	28	5

CONFIRMATION NO. 1436

CORRECTED FILING RECEIPT

OC000000022713763

27572
HARNESS, DICKEY & PIERCE, P.L.C.
P.O. BOX 828
BLOOMFIELD HILLS, MI 48303

Date Mailed: 03/01/2007

Receipt is acknowledged of this regular Patent Application. It will be considered in its order and you will be notified as to the results of the examination. Be sure to provide the U.S. APPLICATION NUMBER, FILING DATE, NAME OF APPLICANT, and TITLE OF INVENTION when inquiring about this application. Fees transmitted by check or draft are subject to collection. Please verify the accuracy of the data presented on this receipt. **If an error is noted on this Filing Receipt, please mail to the Commissioner for Patents P.O. Box 1450 Alexandria Va 22313-1450. Please provide a copy of this Filing Receipt with the changes noted thereon. If you received a "Notice to File Missing Parts" for this application, please submit any corrections to this Filing Receipt with your reply to the Notice. When the USPTO processes the reply to the Notice, the USPTO will generate another Filing Receipt incorporating the requested corrections (if appropriate).**

Applicant(s)

Christopher R. Yahnker, Raleigh, NC;
Daniele C. Brotto, Baltimore, MD;
Erik A. Ekstrom, Woodstock, MD;
Andrew E. Seman JR., White Marsh, MD;
David A. Carrier, Aberdeen, MD;
Steven J. Phillips, Ellicott City, MD;
Michael C. Doyle, Baldwin, MD;
Danh T. Trinh, Parkville, MD;
William D. Spencer, Ellicott City, MD;
Jeffrey J. Francis, Nottingham, MD;
Daniel J. White, Baltimore, MD;

Power of Attorney: The patent practitioners associated with Customer Number **27572**.

Domestic Priority data as claimed by applicant

This appln claims benefit of 60/551,891 03/10/2004
and is a CIP of 10/959,193 10/07/2004
which claims benefit of 60/510,128 10/14/2003
and claims benefit of 60/551,803 03/11/2004
This application 11/075,179
is a CIP of 10/954,222 10/01/2004
which claims benefit of 60/507,955 10/03/2003
and claims benefit of 60/510,125 10/14/2003
and claims benefit of 60/540,323 02/02/2004

Foreign Applications

If Required, Foreign Filing License Granted: 04/07/2005

The country code and number of your priority application, to be used for filing abroad under the Paris Convention, is
US11/075,179

Projected Publication Date: Not Applicable

Non-Publication Request: No

Early Publication Request: No

Title

Thermal management systems for battery packs

Preliminary Class

429

PROTECTING YOUR INVENTION OUTSIDE THE UNITED STATES

Since the rights granted by a U.S. patent extend only throughout the territory of the United States and have no effect in a foreign country, an inventor who wishes patent protection in another country must apply for a patent in a specific country or in regional patent offices. Applicants may wish to consider the filing of an international application under the Patent Cooperation Treaty (PCT). An international (PCT) application generally has the same effect as a regular national patent application in each PCT-member country. The PCT process **simplifies** the filing of patent applications on the same invention in member countries, but **does not result** in a grant of "an international patent" and does not eliminate the need of applicants to file additional documents and fees in countries where patent protection is desired.

Almost every country has its own patent law, and a person desiring a patent in a particular country must make an application for patent in that country in accordance with its particular laws. Since the laws of many countries differ in various respects from the patent law of the United States, applicants are advised to seek guidance from specific foreign countries to ensure that patent rights are not lost prematurely.

Applicants also are advised that in the case of inventions made in the United States, the Director of the USPTO must issue a license before applicants can apply for a patent in a foreign country. The filing of a U.S. patent application serves as a request for a foreign filing license. The application's filing receipt contains further information and guidance as to the status of applicant's license for foreign filing.

Applicants may wish to consult the USPTO booklet, "General Information Concerning Patents" (specifically, the section entitled "Treaties and Foreign Patents") for more information on timeframes and deadlines for filing foreign patent applications. The guide is available either by contacting the USPTO Contact Center at 800-786-9199, or it can be viewed on the USPTO website at http://www.uspto.gov/web/offices/pac/doc/general/index.html.

For information on preventing theft of your intellectual property (patents, trademarks and copyrights), you may wish to consult the U.S. Government website, http://www.stopfakes.gov. Part of a Department of Commerce initiative, this website includes self-help "toolkits" giving innovators guidance on how to protect intellectual property in specific countries such as China, Korea and Mexico. For questions regarding patent enforcement issues, applicants may call the U.S. Government hotline at 1-866-999-HALT (1-866-999-4158).

LICENSE FOR FOREIGN FILING UNDER
Title 35, United States Code, Section 184
Title 37, Code of Federal Regulations, 5.11 & 5.15

GRANTED

The applicant has been granted a license under 35 U.S.C. 184, if the phrase "IF REQUIRED, FOREIGN FILING LICENSE GRANTED" followed by a date appears on this form. Such licenses are issued in all applications where the conditions for issuance of a license have been met, regardless of whether or not a license may be required as set forth in 37 CFR 5.15. The scope and limitations of this license are set forth in 37 CFR 5.15(a) unless an earlier license has been issued under 37 CFR 5.15 (b). The license is subject to revocation upon written notification. The date indicated is the effective date of the license, unless an earlier license of similar scope has been granted under 37 CFR 5.13 or 5.14.

This license is to be retained by the licensee and may be used at any time on or after the effective date thereof unless it is

revoked. This license is automatically transferred to any related applications(s) filed under 37 CFR 1.53(d). This license is not retroactive.

The grant of a license does not in any way lessen the responsibility of a licensee for the security of the subject matter as imposed by any Government contract or the provisions of existing laws relating to espionage and the national security or the export of technical data. Licensees should apprise themselves of current regulations especially with respect to certain countries, of other agencies, particularly the Office of Defense Trade Controls, Department of State (with respect to Arms, Munitions and Implements of War (22 CFR 121-128)); the Bureau of Industry and Security, Department of Commerce (15 CFR parts 730-774); the Office of Foreign Assets Control, Department of Treasury (31 CFR Parts 500+) and the Department of Energy.

NOT GRANTED

No license under 35 U.S.C. 184 has been granted at this time, if the phrase "IF REQUIRED, FOREIGN FILING LICENSE GRANTED" DOES NOT appear on this form. Applicant may still petition for a license under 37 CFR 5.12, if a license is desired before the expiration of 6 months from the filing date of the application. If 6 months has lapsed from the filing date of this application and the licensee has not received any indication of a secrecy order under 35 U.S.C. 181, the licensee may foreign file the application pursuant to 37 CFR 5.15(b).

UNITED STATES PATENT AND TRADEMARK OFFICE

UNITED STATES DEPARTMENT OF COMMERCE
United States Patent and Trademark Office
Address: COMMISSIONER FOR PATENTS
P.O. Box 1450
Alexandria, Virginia 22313-1450
www.uspto.gov

HARNESS, DICKEY & PIERCE, P.L.C.
P.O. BOX 828
BLOOMFIELD HILLS, MI 48303

Mail Date: 04/21/2010

Applicant	: Toru Ushirogouchi	: DECISION ON REQUEST FOR
Patent Number	: 7579390	: RECALCULATION of PATENT
Issue Date	: 08/25/2009	: TERM ADJUSTMENT IN VIEW
Appliction No	: 11/075,183	: OF WYETH AND NOTICE OF INTENT TO
Filed	: 03/08/2005	: ISSUE CERTIFICATE OF CORRECTION
		:

The Request for Recalculation is **GRANTED** to the extent indicated.

The patent term adjustment has been determined to be **836** days. The USPTO will *sua sponte* issue a certificate of correction reflecting the amount of PTA days determined by the recalculation.

Prior to the issuance of the certificate of correction, the USPTO will afford patentee an opportunity to be heard and request reconsideration. Accordingly, patentee has **one month or thirty (30) days**, whichever is longer, to file a request for reconsideration of this patent term adjustment calculation. See 35 U.S.C. 154(b)(3)(B)(ii) and 37 CFR 1.322(a)(4). No extensions of time will be granted under 37 CFR 1.136.

Patentee should use document code PET.OP if electronically filing a request for reconsideration of this patent term adjustment calculation. The patentee must also include the information required by 37 CFR 1.705(b)(2) and the fee required by 37 CFR 1.18(e). If patentee does not file a timely request for reconsideration of this patent term adjustment calculation including the information required by 37 CFR 1.705(b)(2) and the fee required by 37 CFR 1.18(e), the USPTO will issue a certificate of correction reflecting the PTA determination noted above.

Patentee should be aware that in order to preserve the right to review in the United States District Court for the District of Columbia of the USPTO patent term adjustment determination, patentee must ensure that he or she also take the steps required under 35 U.S.C. 154(b)(4)(A) in a timely manner. Nothing in the request for recalculation should be construed as providing an alternative time frame for commencing a civil action under 35 U.S.C. 154(b)(4)(A).

Any questions concerning this decision should be directed to the Office of Patent Legal Administration at 571-272-7702.

UNITED STATES PATENT AND TRADEMARK OFFICE

UNITED STATES DEPARTMENT OF COMMERCE
United States Patent and Trademark Office
Address: COMMISSIONER FOR PATENTS
P.O. Box 1450
Alexandria, Virginia 22313-1450
www.uspto.gov

BAINWOOD HUANG & ASSOCIATES LLC
2 CONNECTOR ROAD
WESTBOROUGH, MA 01581

Mail Date: 05/04/2010

Applicant	: Premkumar Jonnala	: DECISION ON REQUEST FOR
Patent Number	: 7613127	: RECALCULATION of PATENT
Issue Date	: 11/03/2009	: TERM ADJUSTMENT IN VIEW
Application No	: 11/075,189	: OF WYETH AND NOTICE OF INTENT TO
Filed	: 03/07/2005	: ISSUE CERTIFICATE OF CORRECTION
		:

The Request for Recalculation is **GRANTED** to the extent indicated.

The patent term adjustment has been determined to be **714** days. The USPTO will *sua sponte* issue a certificate of correction reflecting the amount of PTA days determined by the recalculation.

Prior to the issuance of the certificate of correction, the USPTO will afford patentee an opportunity to be heard and request reconsideration. Accordingly, patentee has **one month or thirty (30) days**, whichever is longer, to file a request for reconsideration of this patent term adjustment calculation. See 35 U.S.C. 154(b)(3)(B)(ii) and 37 CFR 1.322(a)(4). No extensions of time will be granted under 37 CFR 1.136.

Patentee should use document code PET.OP if electronically filing a request for reconsideration of this patent term adjustment calculation. The patentee must also include the information required by 37 CFR 1.705(b)(2) and the fee required by 37 CFR 1.18(e). If patentee does not file a timely request for reconsideration of this patent term adjustment calculation including the information required by 37 CFR 1.705(b)(2) and the fee required by 37 CFR 1.18(e), the USPTO will issue a certificate of correction reflecting the PTA determination noted above.

Patentee should be aware that in order to preserve the right to review in the United States District Court for the District of Columbia of the USPTO patent term adjustment determination, patentee must ensure that he or she also take the steps required under 35 U.S.C. 154(b)(4)(A) in a timely manner. Nothing in the request for recalculation should be construed as providing an alternative time frame for commencing a civil action under 35 U.S.C. 154(b)(4)(A).

Any questions concerning this decision should be directed to the Office of Patent Legal Administration at 571-272-7702.

UNITED STATES PATENT AND TRADEMARK OFFICE

Commissioner for Patents
United States Patent and Trademark Office
P.O. Box 1450
Alexandria, VA 22313-1450
www.uspto.gov

IRELL & MANELLA LLP
840 NEWPORT CENTER DRIVE
SUITE 400
NEWPORT BEACH CA 92660

COPY MAILED

APR 11 2006

OFFICE OF PETITIONS

ON PETITION

In re Application of :
Syage et al. :
Application No. 11/075,199 :
Filed: March 7, 2005 :
Attorney Docket No. 155392-0040 (P008) :
131625

This is a decision on the petition under 37 CFR 1.102(c)(2)(iii), filed January 30, 2006, to make the above-identified application special based on the invention materially contributing to countering terrorism as set forth in M.P.E.P. § 708.02, Section XI.

The petition is **GRANTED**.

A grantable petition to make an application special under 37 CFR 1.102(c)(2)(iii) and MPEP § 708.02, Section XI: Inventions for Countering Terrorism, should state that special status is sought because the invention materially contributes to countering terrorism. International terrorism as defined in 18 U.S.C. 2331 includes:

> activities that - (A) involve violent acts or acts dangerous to human life that are a violation of the criminal laws of the United States or of any State, or that would be a criminal violation if committed within the jurisdiction of the United States or of any State; [and] (B) appear to be intended - (i) to intimidate or coerce a civilian population; (ii) to influence the policy of a government by intimidation or coercion; or (iii) to affect the conduct of a government by assassination or kidnapping...

If the disclosure it not clear on its face that the claimed invention is materially directed to countering terrorism, the petition must be accompanied by a statement by the applicant, assignee or a registered attorney/agent explaining how the materiality standard is met. The types of technology for countering terrorism could include, but are not limited to, systems for detecting/identifying explosives, aircraft sensors/security systems, and vehicular barricades/disabling systems. No fee is required.

The instant petition includes a statement from the attorney of record. Further, the original disclosure of the instant application clearly showed that the claimed invention was directed towards countering terrorism. Accordingly, the above-identified application has been accorded "special" status.

Telephone inquiries concerning this decision should be directed to Petitions Examiner Liana Chase at 571-272-3206.

All other inquiries concerning either the examination or status of the application should be directed to the Technology Center.

This matter is being referred to the Technology Center Art Unit 2856 for action on the merits commensurate with this decision.

Amelia Au
Petitions Examiner
Office of Petitions

OIPE IAP86
JAN 3 0 2006
PATENT & TRADEMARK OFFICE

IN THE UNITED STATES PATENT AND TRADEMARK OFFICE

In re Application of:

Jack A Syage *et al.*

Application No.: 11/075,199

Filed: March 7, 2005

For: MULTIPLE TRACE PORTAL DETECTION SYSTEMS

Examiner: Unknown

Art Group: 2856

PETITION TO MAKE SPECIAL UNDER MPEP §708.02(XI)

Mail Stop Petitions
Commissioner for Patents
P.O. Box 1450
Alexandria, VA 22313-1450

Sir:

The Applicant hereby requests that the above entitled application be granted a special status under MPEP §708.02(XI). The Applicant believes that the invention disclosed and claimed in the above entitled application materially contributes to countering terrorism. The application discloses a chemical detector. As stated on page 10 of the above entitled application, "Disclosed is a personnel explosives-detecting portal capable of screening multiple persons at once or a combination of persons and baggage." The Applicant submits that this application satisfies the requirements of MPEP §708.02(XI). The Applicant hereby requests that the Patent Office grant this Petition and assign the above entitled application a special status.

The Applicant does not believe a fee is required; however, the Director is authorized to charge any required fee to Deposit Account No. 09-0946. An extra copy of the Fee Transmittal is enclosed for Deposit Account charging purposes.

Respectfully submitted,

IRELL & MANELLA LLP

Dated: January 26, 2006

Ben J. Yorks, Reg. No. 33,609

840 Newport Center Drive
Suite 400
Newport Beach, CA 92660-6324
(949) 760-0991

Certificate of Mailing

I hereby certify that this correspondence is being deposited with the United States Postal Service as First Class Mail in an envelope addressed to: Mail Stop Petitions, Commissioner for Patents, P.O. Box 1450, Alexandria, VA 22313-1450 on January 26, 2006.

Susan Langworthy — Date

ABSTRACT

A detector system that can analyze multiple samples with a single detector. The detector may contain a portal with a first opening and a second opening. A first sample is obtained from the first opening and a second sample is obtained from the second opening. The openings are coupled to a single detector that can analyze both samples.

BACKGROUND OF THE INVENTION

1. Field of the Invention

The present invention relates to the field of detection apparatus used to screen individuals for the presence of explosives and other chemical entities.

2. Background Information

The growing concern over security in public venues has led to development of new technologies capable of rapidly detecting the presence of illicit and hazardous materials. One of the lead organizations in this effort is the Transportation Security Agency (TSA), who is responsible for ensuring safety of air travel and has invested significantly in developing technologies to combat the potential for attacks by explosive devices.

Two types of detectors are used for screening baggage and people. Explosive detection systems (EDSs) detect bulk explosives hidden in checked baggage and frequently operate using dual x-ray tomography. Explosives trace detectors (ETDs) detect vapor or particles of explosives that are contaminated on people and the surface of baggage. ETDs are

also used to resolve alarms from EDSs. Currently ETDs are used on a selective basis to screen for personal items and carry-on bags, but not for directly screening individuals. The lack of a capability to screen for explosives hidden on an individual is arguably the greatest vulnerability in aviation security. Though most of the attention for explosives threat detection is focused on aviation security, in fact security is an issue for many venues including other types of transportation, buildings, ports, stadiums, military base and field operations, and in general any high traffic environment.

Several portal concepts using ETDs have been developed and tested. The most promising are based on non-intrusive (non-contact) removal of particles from clothing, followed by high-flow collection of the particles on the surface of a mesh or substrate, and then thermal desorption into an ETD. For example Linker et al. disclosed in U.S. Pat. No. 5,915,268 a portal device that uses air jets to dislodge particles from a person and a downward flow of air to entrain and carry the particles to a concentrator device. Another portal method was disclosed by Settles in U.S. Pat.

No. 6,073,499, which involves a passive method of particle collection relying on the upward flow of air around people due to thermal conductivity in what is called the human thermal plume (HTP). Jenkins et al disclosed in U.S. Pat. No. 6,708,572 a similar method that uses air jets to assist the upward flow of the HTP. Each of these portal methods involves a flow of particle and vapor laden air and uses a concentration device that removes the target particles and vapor from the large volume of air by collecting them onto a mesh or substrate. The target particles and vapor are then thermally desorbed and mixed with a low volume flow of gas that leads to a chemical analyzer. Another portal method was disclosed by Bromberg et al in U.S. Pat. No. 5,760,314 and, which unlike the above non-contact portals, uses samplings tubes that make contact with individuals to efficiently collect particles and vapor.

A two-stage concentrator for vapor/particle detection was disclosed by Linker and Brusseau in U.S. Pat. No. 6,345,545. Their device enables concentrating particles from a high-volume gas flow to a sufficiently low-volume gas flow to be coupled efficiently to a detector. The first

stage of the concentrator contains a metal mesh for collecting particles and vapor that are entrained in the high-volume gas flow. The desorbed vapors from the first-stage concentrator are collected on the second-stage concentrator and provided to the detectors with a low-volume gas flow.

The chemical detectors used in all of the portals mentioned above use some form of ETDs including ion mobility spectrometry (IMS), mass spectrometry (MS), and gas chromatography/chemiluminescence (GC/CL) detectors.

An important characteristic of a personnel screening portal is that it operate sufficiently fast so as not to significantly impede the flow of people going through it. Current portals operate with a sampling interval of about 10-15 s from one person to another. This is much longer than the interval of about 4-6 s for which standard metal detectors are capable. Methods to improve the sampling interval of a vapor/particle detecting portal are highly desirable.

Another important characteristic of a portal is that it have reasonable upfront and recurring costs per unit. Given

the large number of passenger lanes in U.S. and international airports (about 3000 each) and limited available budgets, inevitable compromises are made with regard to cost and the number of units that can be deployed. Solutions that reduce the cost per passenger screened would allow greater distribution of deployed screening portals.

BRIEF SUMMARY OF THE INVENTION

A detector system that can analyze multiple samples with a single detector. The detector may contain a portal with a first opening and a second opening. A first sample is obtained from the first opening and a second sample is obtained from the second opening. The openings are coupled to a single detector that can analyze both samples.

UNITED STATES PATENT AND TRADEMARK OFFICE

Commissioner for Patents
United States Patent and Trademark Office
P.O. Box 1450
Alexandria, VA 22313-1450
www.uspto.gov

FRANK J. UXA
STOUT, UXA, BUYAN & MULLINS, LLP
SUITE 300
4 VENTURE
IRVINE, CA 92618

COPY MAILED
SEP 19 2006
OFFICE OF PETITIONS

In re Application of Radouil T. Tzekov et al. Application No. 11/075,200 Filed: March 8, 2005 Attorney Docket No. 17780 (OCU)	DECISION ACCORDING STATUS UNDER 37 CFR 1.47(a)

This is in response to the petition filed June 23, 2006 under 37 CFR 1.47(a).

The petition under 37 CFR 1.47(a) is **GRANTED**.

The above-identified application was filed on March 8, 2005, naming Radouil T. Tzekov, Patrick Hughes and James A. Burke as joint inventors but without an executed oath or declaration. Accordingly, a Notice to File Missing Parts was mailed March 3, 2006. In response the instant petition, two month extension of time request and an oath or declaration was filed, but signed only by joint inventors Hughes and Burke, seeking status under 37 CFR 1.47, and claiming that joint inventor Tzekov refuses to join in the application.

A grantable petition under 37 CFR 1.47(a) requires: (1) proof that the non-signing inventor cannot be reached or refuses to sign the oath or declaration after having been presented with the application papers (specification, claims and drawings); (2) an acceptable oath or declaration in compliance with 35 U.S.C. §§ 115 and 116; (3) the petition fee; and (4) a statement of the last known address of the non-signing inventor. Applicant lacks items (1) set forth above.

The petition bears proof that the application papers were forwarded to joint inventor Tzekov, and that to date, Mr. Tzekov has not returned an executed copy of the oath or declaration.

The above-identified application and papers have been reviewed and found in compliance with 37 CFR 1.47(a). In view thereof, this application is hereby accorded Rule 1.47(a) status.

The petition fee in the amount of $200 has been charged to deposit account no. 01-0885 as authorized in the instant petition.

Thus, as provided in Rule 1.47c, this Office will forward notice of this application's filing to the non-signing inventor at the address given in the petition. Notice of the filing of this application will also be published in the Official Gazette.

This matter is being referred to Technology Center 1618 for examination in due course.

Telephone inquiries concerning this matter may be directed to the undersigned Petitions Attorney at (571) 272-3212.

Patricia Faison-Ball

Patricia Faison-Ball
Senior Petitions Attorney
Office of Petitions

UNITED STATES PATENT AND TRADEMARK OFFICE

Commissioner for Patents
United States Patent and Trademark Office
P.O. Box 1450
Alexandria, VA 22313-1450
www.uspto.gov

RADOUIL T. TZEKOV
2790 KELVIN AVENUE, APT. 1323
IRVINE, CA 92614

COPY MAILED
SEP 19 2006
OFFICE OF PETITIONS

In re Application of
Radouil T. Tzekov et al.
Application No. 11/075,200
Filed: March 8, 2005
Title of Invention: SYSTEMS AND METHODS PROVIDING TARGETED INTRAOCULAR DRUG DELIVERY

Dear Mr. Tzekov:

You are named as a joint inventor in the above identified United States patent application, filed under the provisions of 35 U.S.C. 116 (United States Code), and 37 CFR 1.47(a), Rules of Practice in Patent Cases. Should a patent be granted on the application you will be designated therein as a joint inventor.

As a named inventor you are entitled to inspect any paper in the file wrapper of the application, order copies of all or any part thereof (at a prepaid cost per 37 CFR 1.19) or make your position of record in the application. Alternatively, you may arrange to do any of the preceding through a registered patent attorney or agent presenting written authorization from you. If you care to join the application, counsel of record (see below) would presumably assist you. Joining in the application would entail the filing of an appropriate oath or declaration by you pursuant to 37 CFR 1.63.

Telephone inquiries regarding this communication should be directed to the undersigned Petitions Attorney at (571) 272-3212. Requests for information regarding your application should be directed to the File Information Unit at 703/308-2733. Information regarding how to pay for and order a copy of the application, or a specific paper in the application, should be directed to Certification Division at 703/308-9726 or 1-800-972-6382 (outside the Washington D.C. area).

Patricia Faison-Ball

Patricia Faison-Ball
Senior Petitions Attorney
Office of Petitions

cc:

FRANK J. UXA
STOUT, UXA, BUYAN & MULLINS, LLP
SUITE 300
4 VENTURE
IRVINE, CA 92618

UNITED STATES PATENT AND TRADEMARK OFFICE

UNITED STATES DEPARTMENT OF COMMERCE
United States Patent and Trademark Office
Address: COMMISSIONER FOR PATENTS
P.O. Box 1450
Alexandria, Virginia 22313-1450
www.uspto.gov

APPLICATION NO.	FILING DATE	FIRST NAMED INVENTOR	ATTORNEY DOCKET NO.	CONFIRMATION NO.
11/075,210	03/09/2005	Tadashi Takahashi	1046.1359	2438

7590 10/07/2008
STAAS & HALSEY LLP
SUITE 700
1201 NEW YORK AVENUE, N.W.
WASHINGTON, DC 20005

EXAMINER
LIU, LIN

ART UNIT	PAPER NUMBER
2445	

MAIL DATE	DELIVERY MODE
10/07/2008	PAPER

DECISION GRANTING PETITION UNDER 37 CFR 1.138(d)

The declaration of express abandonment is recognized

This is in response to the petition under 37 CFR 1.138(d), requesting for a refund of any previously paid search fee and excess claims fee in the above-identified application.

The petition is granted.

The express abandonment is recognized. Any previously paid search fee and excess claims fee are hereby refunded.

Telephone inquiries should be directed to the Office of Data Management at (571) 272-4200.

Nioni Farmer

Patent Publication Branch
Office of Data Management

Refund Ref:
10/07/2008 NFARMER 0000164694

CHECK Refund Total: $1500.00

Adjustment date: 10/07/2008 NFARMER
03/11/2005 KBETEMA1 00000001 11075210
02 FC:1111 -500.00 OP
04 FC:1201 -1000.00 OP

FORM PET651G (Rev. 08/07)

UNITED STATES PATENT AND TRADEMARK OFFICE

UNITED STATES DEPARTMENT OF COMMERCE
United States Patent and Trademark Office
Address: COMMISSIONER FOR PATENTS
P.O. Box 1450
Alexandria, Virginia 22313-1450
www.uspto.gov

APPL NO.	FILING OR 371 (c) DATE	ART UNIT	FIL FEE REC'D	ATTY.DOCKET NO	DRAWINGS	TOT CLMS	IND CLMS
11/075,231	03/07/2005	1642	1500	MXGNP001X1D1/0124.420US	22	21	4

CONFIRMATION NO. 3926

CORRECTED FILING RECEIPT

OC000000016084914

022434
BEYER WEAVER & THOMAS LLP
P.O. BOX 70250
OAKLAND, CA 94612-0250

Date Mailed: 05/23/2005

Receipt is acknowledged of this regular Patent Application. It will be considered in its order and you will be notified as to the results of the examination. Be sure to provide the U.S. APPLICATION NUMBER, FILING DATE, NAME OF APPLICANT, and TITLE OF INVENTION when inquiring about this application. Fees transmitted by check or draft are subject to collection. Please verify the accuracy of the data presented on this receipt. **If an error is noted on this Filing Receipt, please mail to the Commissioner for Patents P.O. Box 1450 Alexandria Va 22313-1450. Please provide a copy of this Filing Receipt with the changes noted thereon. If you received a "Notice to File Missing Parts" for this application, please submit any corrections to this Filing Receipt with your reply to the Notice. When the USPTO processes the reply to the Notice, the USPTO will generate another Filing Receipt incorporating the requested corrections (if appropriate).**

Applicant(s)

Sergey A. Selifonov, Los Altos, CA;
Willem P.C. Stemmer, Los Gatos, CA;
Claes Gustafsson, Belmont, CA;
Matthew Tobin, San Jose, CA;
Stephen del Cardayre, Belmont, CA;
Phillip A. Patten, Mountain View, CA;
Jeremy Minshull, Menlo Park, CA;

Assignment For Published Patent Application

Maxygen, Inc., Redwood City, CA

Power of Attorney: None

Domestic Priority data as claimed by applicant

This application is a DIV of 09/494,282 01/18/2000
which claims benefit of 60/116,447 01/19/1999
and claims benefit of 60/118,854 02/05/1999
and is a CIP of 09/416,375 10/12/1999 ABN
and is a CIP of 09/408,392 09/28/1999 PAT 6,376,246
which claims benefit of 60/118,813 02/05/1999
and claims benefit of 60/141,049 06/24/1999
This application 11/075,231
is a CIP of 09/416,837 10/12/1999 ABN

Foreign Applications

UNITED STATES OF AMERICA PCT/US00/01138 01/18/2000

UNITED STATES OF AMERICA PCT/US00/01202 01/18/2000
UNITED STATES OF AMERICA PCT/US00/01203 01/18/2000

If Required, Foreign Filing License Granted: 05/09/2005

The country code and number of your priority application, to be used for filing abroad under the Paris Convention, is US11/075,231

Projected Publication Date: 09/01/2005

Non-Publication Request: No

Early Publication Request: No

Title

Methods for making character strings, polynucleotides and polypeptides having desired characteristics

Preliminary Class

435

LICENSE FOR FOREIGN FILING UNDER
Title 35, United States Code, Section 184
Title 37, Code of Federal Regulations, 5.11 & 5.15

GRANTED

The applicant has been granted a license under 35 U.S.C. 184, if the phrase "IF REQUIRED, FOREIGN FILING LICENSE GRANTED" followed by a date appears on this form. Such licenses are issued in all applications where the conditions for issuance of a license have been met, regardless of whether or not a license may be required as set forth in 37 CFR 5.15. The scope and limitations of this license are set forth in 37 CFR 5.15(a) unless an earlier license has been issued under 37 CFR 5.15(b). The license is subject to revocation upon written notification. The date indicated is the effective date of the license, unless an earlier license of similar scope has been granted under 37 CFR 5.13 or 5.14.

This license is to be retained by the licensee and may be used at any time on or after the effective date thereof unless it is revoked. This license is automatically transferred to any related applications(s) filed under 37 CFR 1.53(d). This license is not retroactive.

The grant of a license does not in any way lessen the responsibility of a licensee for the security of the subject matter as imposed by any Government contract or the provisions of existing laws relating to espionage and the national security or the export of technical data. Licensees should apprise themselves of current regulations especially with respect to certain countries, of other agencies, particularly the Office of Defense Trade Controls, Department of State (with respect to Arms, Munitions and Implements of War (22 CFR 121-128)); the Office of Export Administration, Department of Commerce (15 CFR 370.10 (j)); the Office of Foreign Assets Control, Department of Treasury (31 CFR Parts 500+) and the Department of Energy.

NOT GRANTED

No license under 35 U.S.C. 184 has been granted at this time, if the phrase "IF REQUIRED, FOREIGN FILING LICENSE GRANTED" DOES NOT appear on this form. Applicant may still petition for a license under 37 CFR

5.12, if a license is desired before the expiration of 6 months from the filing date of the application. If 6 months has lapsed from the filing date of this application and the licensee has not received any indication of a secrecy order under 35 U.S.C. 181, the licensee may foreign file the application pursuant to 37 CFR 5.15(b).

UNITED STATES PATENT AND TRADEMARK OFFICE

UNITED STATES DEPARTMENT OF COMMERCE
United States Patent and Trademark Office
Address: COMMISSIONER FOR PATENTS
P.O. Box 1450
Alexandria, Virginia 22313-1450
www.uspto.gov

CHRISTIE, PARKER & HALE, LLP
PO BOX 7068
PASADENA, CA 91109-7068

Mail Date: 04/21/2010

Applicant	: Jurgen Harms	: DECISION ON REQUEST FOR
Patent Number	: 7621940	: RECALCULATION of PATENT
Issue Date	: 11/24/2009	: TERM ADJUSTMENT IN VIEW
Appliction No	: 11/075,235	: OF WYETH AND NOTICE OF INTENT TO
Filed	: 03/08/2005	: ISSUE CERTIFICATE OF CORRECTION
		:

The Request for Recalculation is **GRANTED** to the extent indicated.

The patent term adjustment has been determined to be **279** days. The USPTO will *sua sponte* issue a certificate of correction reflecting the amount of PTA days determined by the recalculation.

Prior to the issuance of the certificate of correction, the USPTO will afford patentee an opportunity to be heard and request reconsideration. Accordingly, patentee has **one month or thirty (30) days**, whichever is longer, to file a request for reconsideration of this patent term adjustment calculation. See 35 U.S.C. 154(b)(3)(B)(ii) and 37 CFR 1.322(a)(4). No extensions of time will be granted under 37 CFR 1.136.

Patentee should use document code PET.OP if electronically filing a request for reconsideration of this patent term adjustment calculation. The patentee must also include the information required by 37 CFR 1.705(b)(2) and the fee required by 37 CFR 1.18(e). If patentee does not file a timely request for reconsideration of this patent term adjustment calculation including the information required by 37 CFR 1.705(b)(2) and the fee required by 37 CFR 1.18(e), the USPTO will issue a certificate of correction reflecting the PTA determination noted above.

Patentee should be aware that in order to preserve the right to review in the United States District Court for the District of Columbia of the USPTO patent term adjustment determination, patentee must ensure that he or she also take the steps required under 35 U.S.C. 154(b)(4)(A) in a timely manner. Nothing in the request for recalculation should be construed as providing an alternative time frame for commencing a civil action under 35 U.S.C. 154(b)(4)(A).

Any questions concerning this decision should be directed to the Office of Patent Legal Administration at 571-272-7702.

UNITED STATES PATENT AND TRADEMARK OFFICE

Commissioner for Patents
United States Patent and Trademark Office
P.O. Box 1450
Alexandria, VA 22313-1450
www.uspto.gov

CONNOLLY BOVE LODGE & HUTZ LLP
1875 EYE STREET, N.W., SUITE 1100
WASHINGTON, DC 20036

COPY MAILED

DEC 19 2007

OFFICE OF PETITIONS

In re Application of	:	
Yeheskel Bar-Ness et al	:	
Application No. 11/075,254	:	ON PETITION
Filed: March 8, 2005	:	
Attorney Docket No. 27592-00186-US1	:	

This is a decision on the petition under 37 CFR 1.137(b), filed September 4, 2007, to revive the above-identified application.

The petition is **GRANTED**.

The above-identified application became abandoned for failure to reply in a timely manner to the non-final Office action mailed February 1, 2007, which set a shortened statutory period for reply of three (3) months. No extension of time under the provisions of 37 CFR 1.136(a) were obtained. Accordingly, the above-identified application became abandoned on May 2, 2007.

An extension of time under 37 CFR 1.136 must be filed prior to the expiration of the maximum extendable period for reply. See In re Application of S., 8 USPQ2d 1630, 1631 (Comm'r Pats. 1988). Accordingly, since the $1020 extension of time submitted with the petition was subsequent to the maximum extendable period for reply, this fee is unnecessary and will be credited to petitioner's deposit account.

Telephone inquiries concerning this decision should be directed to Irvin Dingle at (571) 272-3210.

This matter is being referred to Technology Center AU 2611 for further processing.

Irvin Dingle
Petitions Examiner
Office of Petitions

DATE 12/18/07

APPLICATION NUMBER 11/075,254

DOC CODE WFEE

DOC DATE 12/19/07

DELIVER THE ATTACHED FIFLE/DOCUMENT TO THE TC SCANNING CENTER

CONTRACTOR: THE ATTACHED FILE/DOCUMENT MUST BE INDEXED AND SCANNED INTO IFW WITHIN **8** WORK HOURS; UPLOADING OF THE SCANNED IMAGES SHOULD OCCUR NO LATER THAN **16** WORK HOURS FOLLOWING RECEIPT OF THIS REQUEST

AFTER SCANNING, ORIGINAL DOCUMENTS SHOULD BE BOXED IN ACCORDANCE WITH INSTRUCTIONS

PTO/SB/64 (04-07)
Approved for use through 09/30/2007. OMB 0651-0031
U.S. Patent and Trademark Office; U.S. DEPARTMENT OF COMMERCE
Under the Paperwork Reduction Act of 1995, no persons are required to respond to a collection of information unless it displays a valid OMB control number.

PETITION FOR REVIVAL OF AN APPLICATION FOR PATENT ABANDONED UNINTENTIONALLY UNDER 37 CFR 1.137(b)	Docket Number (Optional) 27592-00186-US1

First named inventor: Yeheskel Bar-Ness

Application No: 11/075,254-Conf. #2655 Art Unit: 2611

Filed: March 8, 2005 Examiner: K. Kim

Title: DYNAMIC DIFFERENTIATED LINK ADAPTATION FOR ULTRA-WIDEBAND COMMUNICATION SYSTEM

Attention: Office of Petitions
Mail Stop Petition
Commissioner for Patents
P.O. Box 1450
Alexandria, VA 22313-1450
FAX (571) 273-8300

NOTE: If information or assistance is needed in completing this form, please contact Petitions Information at (571) 272-3282.

The above-identified application became abandoned for failure to file a timely and proper reply to a notice or action by the United States Patent and Trademark Office. The date of abandonment is the day after the expiration date of the period set for reply in the office notice or action plus any extensions of time actually obtained.

APPLICANT HEREBY PETITIONS FOR REVIVAL OF THIS APPLICATION

NOTE: A grantable petition requires the following items:
(1) Petition fee;
(2) Reply and/or issue fee;
(3) Terminal disclaimer with disclaimer fee – required for all utility and plant applications filed before June 8, 1995; and for all design applications; and
(4) Statement that the entire delay was unintentional.

1. Petition fee

☐ Small entity – fee $ _____ (37 CFR 1.17(m)). Applicant claims small entity status. See 37 CFR 1.27.

☒ Other than small entity – fee $ 1,500.00 (37 CFR 1.17(m))

2. Reply and/or fee

A. The reply and/or fee to the above-noted Office action in the form of Amendment and an Extension of Time (identify type of reply):

☐ has been filed previously on _____ .

☒ is enclosed herewith.

B. The issue fee and publication fee (if applicable) of $ _____ .

☐ has been paid previously on _____ .

☐ is enclosed herewith.

Adjustment date:-12/19/2007 CKHLOK
09/05/2007-INTEFSW-00002224-220185 11075254
04 FC:1253 1020.00 CR

562093

Under the Paperwork Reduction Act of 1995, no persons are required to respond to a collection of information unless it displays a valid OMB control number.

3. Terminal disclaimer with disclaimer fee

[x] Since this utility/plant application was filed on or after June 8, 1995, no terminal disclaimer is required.

[ ] A terminal disclaimer (and disclaimer fee (37 CFR 1.20(d)) of $ _____ for a small entity or $ _____ for other than a small entity) disclaiming the required period of time is enclosed herewith (see PTO/SB/63).

4. STATEMENT: The entire delay in filing the required reply from the due date for the required reply until the filing of a grantable petition under 37 CFR 1.137(b) was unintentional. [NOTE. The United States Patent and Trademark Office may require additional information if there is a question as to whether either the abandonment or the delay in filing a petition under 37 CFR 1.137(b) was unintentional (MPEP 711.03(c), subsections (III)(C) and (D))].

WARNING:

Petitioner/applicant is cautioned to avoid submitting personal information in documents filed in a patent application that may contribute to identity theft. Personal information such as social security numbers, bank account numbers, or credit card numbers (other than a check or credit card authorization form PTO-2038 submitted for payment purposes) is never required by the USPTO to support a petition or an application. If this type of personal information is included in documents submitted to the USPTO, petitioners/applicants should consider redacting such personal information from the documents before submitting them to the USPTO. Petitioner/applicant is advised that the record of a patent application is available to the public after publication of the application (unless a non-publication request in compliance with 37 CFR 1.213(a) is made in the application) or issuance of a patent. Furthermore, the record from an abandoned application may also be available to the public if the application is referenced in a published application or an issued patent (see 37 CFR 1.14). Checks and credit card authorization forms PTO-2038 submitted for payment purposes are not retained in the application file and therefore are not publicly available.

/Jeffrey W. Gluck/	September 4, 2007
Signature	Date
Jeffrey W. Gluck	44,457
Typed or printed name	Registration Number, if applicable
CONNOLLY BOVE LODGE & HUTZ LLP 1875 Eye Street, NW Suite 1100 Washington, DC 20006	(202) 331-7111
Address	Telephone Number

Enclosures:

[x] Fee Payment

[x] Reply

[ ] Terminal Disclaimer Form

[ ] Additional sheets containing statements establishing unintentional delay

[ ] Other: _____

UNITED STATES PATENT & TRADEMARK OFFICE
Washington, D.C. 20231

REQUEST FOR PATENT FEE REFUND

1 Date of Request: 12/18/07

2 Serial/Patent # 11/075,254

	3 Please refund the following fee(s):	4 PAPER NUMBER	5 DATE FILED	6 AMOUNT
	Filing			$
	Amendment			$
X	Extension of Time 1253		09/04/07	$ 1,020.00
	Notice of Appeal/Appeal			$
	Petition			$
	Issue			$
	Cert of Correction/Terminal Disc.			$
	Maintenance			$
	Assignment			$
	Other			$

7 TOTAL AMOUNT OF REFUND $ 1,020.00

8 TO BE REFUNDED BY:

	Treasury Check
X	Credit Deposit A/C #:

9 22--0185

10 REASON:

	Overpayment
	Duplicate Payment
X	No Fee Due (Explanation):

The extension of time period is over, no extension fee is due.

11 REFUND REQUESTED BY:

TYPED/PRINTED NAME: Irvin Dingle TITLE: Paralegal

SIGNATURE: PHONE: 2-3210

OFFICE: Petitons

****

THIS SPACE RESERVED FOR FINANCE USE ONLY:

APPROVED: DATE: 12/19/07

Instructions for completion of this form appear on the back. After completion, attach white and yellow copies to the official file and mail or hand-carry to:

Office of Finance
Refund Branch
Crystal Park One, Room 802B

FORM PTO 1577
(01/90)

UNITED STATES PATENT AND TRADEMARK OFFICE

Commissioner for Patents
United States Patent and Trademark Office
P.O. Box 1450
Alexandria, VA 22313-1450
www.uspto.gov

NOV 08 2005

C. Andrew Im
FULBRIGHT & JAWORSKI L.L.P.
666 Fifth Avenue
New York, NY 10103

In re Application of:	:	
GESHWIND *et al.*	:	DECISION ON PETITION
Serial No.: 11,075,256	:	TO MAKE SPECIAL
Filed: May 07, 2005	:	
Attorney Docket No.: **PSS 212.1 US**	:	

This is a decision on the petition under 37 C.F.R. § 1.102(c), filed August 15, 2005, to make the above-identified application special.

Petitioner requests that the above-identified application be made special under the accelerated examination procedure set forth in the Manual of Patent Examining Procedure (M.P.E.P.) § 708.02, Section IV: Applicant's Age.

A grantable petition to make special under 37 C.F.R. § 1.102, and in accordance with M.P.E.P. § 708.02, Section IV, must include evidence showing that the applicant is sixty five (65) years of age or more. No fee is required for this petition.

The petition includes a passport from one of the co-inventors, William G Fateley, showing that the he is sixty-five (65) years of age or more.

Accordingly, the petition is GRANTED.

After allowance, this application will be given priority for printing. See M.P.E.P. § 1309.

Inquiries regarding this decision should be directed to Clayton LaBalle at (571) 272-1594.

Clayton E. LaBalle, Special Programs Examiner
Technology Center 2800
Semiconductors, Electrical and Optical
Systems and Components

UNITED STATES PATENT AND TRADEMARK OFFICE

Commissioner for Patents
United States Patent and Trademark Office
P.O. Box 1450
Alexandria, VA 22313-1450
www.uspto.gov

Jacob N. Erlich
BURNS & LEVINSON LLP
125 Summer Street
Boston, MA 02110-1624

COPY MAILED

FEB 07 2008

OFFICE OF PETITIONS

In re Application of :
John Hensel :
Application No. 11/075,264 : DECISION ON PETITION
Filed: March 08, 2005 :
Attorney Docket No. 90012.0.1 :

This is a decision on the petition under the unintentional provisions of 37 CFR 1.137(b), filed 20 December 2007, to revive the above-identified application.

The petition is **GRANTED**.

The application became abandoned for failure to timely reply within the meaning of 37 CFR 1.113 to the final Office action, mailed 12 April 2007, which set a shortened statutory period for reply of three (3) months. No extensions of time under the provisions of 37 CFR 1.136(a) were obtained. Accordingly, the application became abandoned on 13 July 2007.

The petition satisfies the requirements of 37 CFR 1.137(b) in that petitioner has supplied (1) the reply in the form of an amendment that would place the application in condition for allowance upon revival, (2) the petition fee of $770.00, and (3) a proper statement of unintentional delay.

An extension of time under 37 CFR 1.136 must be filed prior to the expiration of the maximum extendable period for reply. See In re Application of S., 8 USPQ2d 1630, 1631 (Comm'r Pats. 1988). Since the $525.00 extension of time fee submitted with the petition on 20 December 2007 was subsequent to the maximum extendable period for reply, this fee is unnecessary and will be credited to petitioner's deposit account.

Telephone inquiries concerning this decision should be directed to Allen C. Ho at (571) 272-6052.

This application is being referred to Technology Center AU 2838 for appropriate action by the Examiner in the normal course of business on the reply received 20 December 2007.

David Bucci
Petitions Examiner
Office of Petitions

UNITED STATES PATENT AND TRADEMARK OFFICE

COMMISSIONER FOR PATENTS
UNITED STATES PATENT AND TRADEMARK OFFICE
WASHINGTON, D.C. 20231
www.uspto.gov

MAILED

JUL 3 2006

GROUP 2800

Paper No. 20060627

Applicant : Moos, Daniel et al.
Appl No.: 11/075,300
Filed: March 8, 2005

DECISION GRANTING PETITION UNDER *37 CFR 1.84*

This decision is in response to the petition filed March 8, 2005 in the above-identified application. Petitioner requests that color drawings be accepted in accordance with 37 C.F.R. 1.84(a)(2).

The petition states that color drawings of Figures "5, 12-14 and 15" are necessary in order to completely and accurately represent the invention. Applicant has actually submitted color drawings of Figures 5, 12-14, and 16, and amended the specification to indicate that Figures 5, 12-14, and 16. The petition will therefore be treated as if the cited figures were Figures 5, 12-14, and 16.

The petition complies with 37 C.F.R. 1.84(a)(2) in that it was accompanied by (1) the appropriate fee and (2) three sets of color drawings. The specification further includes the required text language set forth in 37 C.F.R. 1.84 (a)(2)(iii).

The papers filed on March 8, 2005 fulfill the requirements set forth in 37 C.F.R. 1.84(a)(2) and the petition is GRANTED.

Marc Hoff
Supervisory Patent Examiner, Art Unit 2857
Technology Center 2800

PAUL S MADAN
MADAN, MOSSMAN & SRIRAM, PC
2603 AUGUSTA, SUITE 700
HOUSTON TX 77057-1130

UNITED STATES PATENT AND TRADEMARK OFFICE

Commissioner for Patents
United States Patent and Trademark Office
P.O. Box 1450
Alexandria, VA 22313-1450
www.uspto.gov

JUN 02 2009

KEITH B. WILLHEL, ATTORNEY AT LAW
6266 DEL MONTE
HOUSTON, TX 77057

In re Application of Lawrence C. Wood Application No. 11/075,326 Filed: March 8, 2005 For: METHODS OF ENHANCING SEPARATION OF PRIMARY REFLECTION SIGNALS AND NOISE IN SEISMIC DATA USING RADON TRANSFORMATIONS	:	PETITION TO ACCEPT COLOR DRAWINGS/PHOTOGRAPHS

This is a decision on applicant's petition under 37 CFR 1.184(A)(2) Filed March 8, 2005 to accept color drawings/photographs.

For the acceptance of color drawings in accordance with 37 CFR 1.184(A)(2), a petition is required which fulfills the following requirements:

(i) The appropriate fee set forth in 1.17(h),
(ii) three (3) sets of color drawings/photographs, and
(iii) amending the specification to contain the following language as the first paragraph in that portion of the specification relating to the brief description of the drawings: "The file of this patent contains at least one drawing executed in color photography. Copies of this patent with color photographs will be provided by the Patent and Trademark Office upon request and payment of necessary fee."

Having met the requirements of 37 CFR 1.184(A)(2), the petition is **GRANTED**.

Any questions or comments with respect to the decision should be forwarded to Supervisory Patent Examiner, Jack Keith at the number listed below.

Jack Keith
Supervisory Patent Examiner
Art Unit 3663
(571) 272-6878

jwk: 6/1/09

UNITED STATES PATENT AND TRADEMARK OFFICE

Commissioner for Patents
United States Patent and Trademark Office
P.O. Box 1450
Alexandria, VA 22313-1450
www.uspto.gov

REED SMITH, LLP
10 SOUTH WACKER DRIVE
CHICAGO, IL 60606-7507

MAILED

JUL 20 2009

OFFICE OF PETITIONS

In re Application of

William SWALLOW
Application No. 11/075, 342
Filed: March 8, 2005
Attorney Docket No. **48004/98486**

DECISION ON PETITION TO WITHDRAW FROM RECORD

This is a decision on the Request to Withdraw as attorney or agent of record under 37 C.F.R. § 1.36(b), filed April 30, 2009.

The request is **APPROVED**.

A grantable request to withdraw as attorney/agent of record must be signed by every attorney/agent seeking to withdraw or contain a clear indication that one attorney is signing on behalf of another/others.

The request was signed by Michael M. Geoffrey on behalf of all attorneys of record. All attorneys/agents associated have been withdrawn. Applicant is reminded that there is no attorney of record at this time.

The request to change the correspondence of record is not acceptable as the requested correspondence address is not that of: (1) the first named signing inventor; or (2) an intervening assignee of the entire interest under 37 C.F.R 3.71. All future communications from the Office will be directed to the sole named signing inventor at the first copied address below until otherwise properly notified by the applicant.

There is an outstanding Office action mailed January 5, 2009 that requires a reply from the applicant.

Telephone inquiries concerning this decision should be directed to the undersigned at 571-272-7253.

/Monica A. Graves/
Petitions Examiner, Office of Petitions

cc: **WILLIAM SWALLOW**
57628 HAWTHORNE STREET
ELKHART, IN 46515

cc: **HOWARD B. ROCKMAN & ASSOCIATES**
1S376 SUMMIT AVENUE, COURT C
OAKBROOK TERRACE, IL 60181

UNITED STATES PATENT AND TRADEMARK OFFICE

Commissioner for Patents
United States Patent and Trademark Office
P.O. Box 1450
Alexandria, VA 22313-1450
www.uspto.gov

Brinks, Hofer, Gilson & Lione
P.O. Box 10395
Chicago, IL 60610

COPY MAILED

JUN 05 2009

OFFICE OF PETITIONS

In re Application of	:	
Vincent R. Farnsworth	:	
Application No. 11/075,355	:	DECISION ON PETITION
Filed: March 8, 2005	:	TO WITHDRAW
Attorney Docket No. 12858-18	:	FROM RECORD
	:	

This is a decision on the Request to Withdraw as attorney or agent of record under 37 C.F.R. § 1.36(b), filed December 19, 2005.

The request is **moot because a revocation of power of attorney has been filed**.

A review of the file record indicates that the power of attorney to Robert B. Polit and all attorneys/agents of record has been revoked by the assignee of the patent application on June 13, 2006. Accordingly, the request to withdraw under 37 C.F.R. § 1.36(b) is moot.

All future communications from the Office will continue to be directed to the below-listed address until otherwise notified by applicant.

Telephone inquires concerning this decision should be directed to Kimberly Inabinet at 571-272-4618.

Kimberly Inabinet
Petitions Examiner
Office of Petitions

cc: Beckman Coulter, Inc.
Mitchell E. Alter
P.O. Box 169015
Mail Code 32-A02
Miami FL 33116-9015

UNITED STATES PATENT AND TRADEMARK OFFICE

Commissioner for Patents
United States Patent and Trademark Office
P.O. Box 1450
Alexandria, VA 22313-1450
www.uspto.gov

MERCHANT AND GOULD PC
P.O. BOX 2903
MINNEAPOLIS, MN 55402-0903

COPY MAILED

JUN 15 2007

OFFICE OF PETITIONS

In re Application of	:	
Mark D. LEVITT, et al	:	
Application No. 11/075,365	:	DECISION ON PETITION
Filed: March 7, 2005	:	TO WITHDRAW
Attorney Docket No. 163.1275D3	:	FROM RECORD

This is a decision on the Request to Withdraw as attorney or agent of record under 37 C.F.R. § 1.36(b), filed January 22, 2007.

The request is **APPROVED**.

A grantable request to withdraw as attorney/agent of record must be signed by every attorney/agent seeking to withdraw or contain a clear indication that one attorney is signing on behalf of another/others. A request to withdraw will not be approved unless at least 30 (thirty) days would remain between the date of approval and the later of the expiration date of a time to file a response or the expiration date of the maximum time period which can be extended under 37 C.F.R. § 1.136(a).

Sarah M. Monfeldt has been withdrawn as attorney of record; all other attorneys remain of record.

The correspondence address of record remains unchanged.

There are no pending Office actions at the present time.

Telephone inquiries concerning this decision should be directed to Diane Goodwyn at 571-272-6735.

April Wise
Petitions Examiner
Office of Petitions

SPE RESPONSE FOR CERTIFICATE OF CORRECTION

Paper No.: —

DATE : 3/30/10

TO SPE OF : ART UNIT 3766

SUBJECT : Request for Certificate of Correction for Appl. No.: 11/675375 Patent No.: 7650186B2

Please respond to this request for a certificate of correction within 7 days.

FOR IFW FILES:

Please review the requested changes/corrections as shown in the **COCIN** document(s) in the IFW application image. No new matter should be introduced, nor should the scope or meaning of the claims be changed.

Please complete the response (see below) and forward the completed response to scanning using document code **COCX**.

FOR PAPER FILES:

Please review the requested changes/corrections as shown in the attached certificate of correction. Please complete this form (see below) and forward it with the file to:

Certificates of Correction Branch (CofC)
Randolph Square – 9D10-A
Palm Location 7580

Virginia Tolbert
Certificates of Correction Branch
571-272-0460

Thank You For Your Assistance

The request for issuing the above-identified correction(s) is hereby:
Note your decision on the appropriate box.

- [x] **Approved** — All changes apply.
- [ ] **Approved in Part** — Specify below which changes **do not** apply.
- [ ] **Denied** — State the reasons for denial below.

Comments: CHANGES TO CLAIMS ARE MINOR AND SHOULD BE ENTERED

Carl H. Layno 3766 4/19/10

PTOL-306 (REV. 7/03)

U.S. DEPARTMENT OF COMMERCE Patent and Trademark Office
CARL H. LAYNO
SUPERVISORY PATENT EXAMINER

UNITED STATES PATENT AND TRADEMARK OFFICE

UNITED STATES DEPARTMENT OF COMMERCE
United States Patent and Trademark Office
Address: COMMISSIONER FOR PATENTS
P.O. Box 1450
Alexandria, Virginia 22313-1450
www.uspto.gov

SCHWEGMAN, LUNDBERG & WOESSNER, P.A.
P.O. BOX 2938
MINNEAPOLIS, MN 55402

Mail Date: 05/21/2010

Applicant	: Roger N. Hastings	: DECISION ON REQUEST FOR
Patent Number	: 7650186	: RECALCULATION of PATENT
Issue Date	: 01/19/2010	: TERM ADJUSTMENT IN VIEW
Application No	: 11/075,375	: OF WYETH AND NOTICE OF INTENT TO
Filed	: 03/07/2005	: ISSUE CERTIFICATE OF CORRECTION
		:

The Request for Recalculation is **GRANTED** to the extent indicated.

The patent term adjustment has been determined to be **271** days. The USPTO will *sua sponte* issue a certificate of correction reflecting the amount of PTA days determined by the recalculation.

Prior to the issuance of the certificate of correction, the USPTO will afford patentee an opportunity to be heard and request reconsideration. Accordingly, patentee has **one month or thirty (30) days**, whichever is longer, to file a request for reconsideration of this patent term adjustment calculation. See 35 U.S.C. 154(b)(3)(B)(ii) and 37 CFR 1.322(a)(4). No extensions of time will be granted under 37 CFR 1.136.

Patentee should use document code PET.OP if electronically filing a request for reconsideration of this patent term adjustment calculation. The patentee must also include the information required by 37 CFR 1.705(b)(2) and the fee required by 37 CFR 1.18(e). If patentee does not file a timely request for reconsideration of this patent term adjustment calculation including the information required by 37 CFR 1.705(b)(2) and the fee required by 37 CFR 1.18(e), the USPTO will issue a certificate of correction reflecting the PTA determination noted above.

Patentee should be aware that in order to preserve the right to review in the United States District Court for the District of Columbia of the USPTO patent term adjustment determination, patentee must ensure that he or she also take the steps required under 35 U.S.C. 154(b)(4)(A) in a timely manner. Nothing in the request for recalculation should be construed as providing an alternative time frame for commencing a civil action under 35 U.S.C. 154(b)(4)(A).

Any questions concerning this decision should be directed to the Office of Patent Legal Administration at 571-272-7702.

UNITED STATES PATENT AND TRADEMARK OFFICE

UNITED STATES DEPARTMENT OF COMMERCE
United States Patent and Trademark Office
Address: COMMISSIONER FOR PATENTS
P.O. Box 1450
Alexandria, Virginia 22313-1450
www.uspto.gov

SCHWEGMAN, LUNDBERG & WOESSNER, P.A.
P.O. BOX 2938
MINNEAPOLIS, MN 55402

Mail Date: 05/21/2010

Applicant	: Roger N. Hastings	: DECISION ON REQUEST FOR
Patent Number	: 7647109	: RECALCULATION of PATENT
Issue Date	: 01/12/2010	: TERM ADJUSTMENT IN VIEW
Application No	: 11/075,376	: OF WYETH AND NOTICE OF INTENT TO
Filed	: 03/07/2005	: ISSUE CERTIFICATE OF CORRECTION
		:

The Request for Recalculation is **GRANTED** to the extent indicated.

The patent term adjustment has been determined to be **271** days. The USPTO will *sua sponte* issue a certificate of correction reflecting the amount of PTA days determined by the recalculation.

Prior to the issuance of the certificate of correction, the USPTO will afford patentee an opportunity to be heard and request reconsideration. Accordingly, patentee has **one month or thirty (30) days**, whichever is longer, to file a request for reconsideration of this patent term adjustment calculation. See 35 U.S.C. 154(b)(3)(B)(ii) and 37 CFR 1.322(a)(4). No extensions of time will be granted under 37 CFR 1.136.

Patentee should use document code PET.OP if electronically filing a request for reconsideration of this patent term adjustment calculation. The patentee must also include the information required by 37 CFR 1.705(b)(2) and the fee required by 37 CFR 1.18(e). If patentee does not file a timely request for reconsideration of this patent term adjustment calculation including the information required by 37 CFR 1.705(b)(2) and the fee required by 37 CFR 1.18(e), the USPTO will issue a certificate of correction reflecting the PTA determination noted above.

Patentee should be aware that in order to preserve the right to review in the United States District Court for the District of Columbia of the USPTO patent term adjustment determination, patentee must ensure that he or she also take the steps required under 35 U.S.C. 154(b)(4)(A) in a timely manner. Nothing in the request for recalculation should be construed as providing an alternative time frame for commencing a civil action under 35 U.S.C. 154(b)(4)(A).

Any questions concerning this decision should be directed to the Office of Patent Legal Administration at 571-272-7702.

UNITED STATES PATENT AND TRADEMARK OFFICE

Commissioner for Patents
United States Patent and Trademark Office
P.O. Box 1450
Alexandria, VA 22313-1450
www.uspto.gov

MAILED

AUG 26 2009

OFFICE OF PETITIONS

MARTINE PENILLA & GENCARELLA, LLP
710 LAKEWAY DRIVE
SUITE 200
SUNNYVALE CA 94085

In re Application of	:	
Toshie Imai	:	
Application No. 11/075,380	:	DECISION ON PETITION
Filed: March 7, 2005	:	UNDER 37 CFR 1.313(c)
Attorney Docket No. MIPFP147	:	

This is a decision on the petition under 37 CFR 1.313(c), filed August 25, 2009, to withdraw the above-identified application from issue after payment of the issue fee.

The petition is **GRANTED**.

The above-identified application is withdrawn from issue for consideration of a submission under 37 CFR 1.114 (request for continued examination). *See* 37 CFR 1.313(c)(2).

Petitioner is advised that the issue fee paid on April 29, 2009, cannot be refunded. If, however, this application is again allowed, petitioner may request that it be applied towards the issue fee required by the new Notice of Allowance.[1]

Telephone inquiries should be directed to the undersigned at (571) 272-3208.

This application is being referred to Technology Center AU 2624 for processing of the request for continued examination under 37 CFR 1.114 and for consideration of the concurrently filed IDS.

/Karen Creasy/
Karen Creasy
Petitions Examiner
Office of Petitions

---

[1] *The request to apply the issue fee to the new Notice may be satisfied by completing and returning the new Part B – Fee(s) Transmittal Form (along with any balance due at the time of submission). Petitioner is advised that the Issue Fee Transmittal Form* ***must*** *be completed and timely submitted to avoid abandonment of the application.*

UNITED STATES PATENT AND TRADEMARK OFFICE

Commissioner for Patents
United States Patent and Trademark Office
P.O. Box 1450
Alexandria, VA 22313-1450
www.uspto.gov

SAP AG c/o FOLEY & LARDNER, LLP
777 EAST WISCONSIN AVENUE
SUITE 3300
MILWAUKEE WI 53202-5367

MAILED

MAR 0 1 2010

OFFICE OF PETITIONS

In re Application of	:	
Wittmer et al.	:	
Application No. 11/075391	:	ON REQUEST FOR
Filing or 371(c) Date: 03/08/2005	:	RECONSIDERATION OF
Attorney Docket No.	:	PATENT TERM ADJUSTMENT
038786-0139	:	

This is in response to the REQUEST FOR RECONSIDERATION OF PATENT TERM ADJUSTMENT UNDER 37 CFR §1.705, filed November 25, 2009. Applicants have determined that the patent is entitled to 1401 days of PTA, not 701 days as calculated by the Office as of the mailing of the initial determination of patent term adjustment. Applicant requests this correction solely on the basis that the Office will take in excess of three years to issue this patent. The request is properly treated under 37 CFR 1.705(b).

Applicants also request that a decision on this request for reconsideration of patent term adjustment be deferred or delayed until after a final decision has been rendered in Wyeth v. Dudas, Civ. Action No. 07-1492 (JR) (Sep. 30, 2008). There is no specific regulatory provision for requesting that a petition under 37 CFR 1.705(d) be held in abeyance. Accordingly, the request to hold in abeyance a decision on the merits of the instant application for patent term adjustment is **DISMISSED**.

As the instant application for patent term adjustment requests reconsideration of the patent term adjustment as it relates to the Office's failure to issue the patent within 3 years of the filing date, the application for patent term adjustment under 37 CFR 1.705(b) is **DISMISSED as PREMATURE**.

Knowledge of the actual date the patent issues is required to calculate the amount, if any, of additional patent term patentee is entitled to for Office failure to issue the patent within 3 years. See § 1.702(b). (This is true even where a request for continued examination (RCE) was filed). The computer will not undertake the § 1.702(b) calculation until the actual date of issuance of the patent has been determined. Likewise, the computer will not calculate any further Office delay under § 1.702(a)(4) or applicant delay under § 1.704(c)(10) until the actual date of issuance of the patent has been determined. As such, the Office can not make a determination on the correctness of the patent term adjustment until the patent has issued.

Requesting reconsideration of the patent term adjustment to be indicated on the patent under 37 CFR 1.705(b) based on the initial determination of patent term adjustment and a projected

issuance date of the patent (or even the filing date of the request for continued examination) is premature. Accordingly, it is appropriate to dismiss as premature such a request.

Rather than file an application for patent term adjustment under 37 CFR 1.705(b) contesting the 37 CFR 1.702(b) calculation at the time of the mailing of the notice of allowance, applicant is advised that they may wait until the time of the issuance of the patent and file a request for reconsideration of the patent term adjustment pursuant to 37 CFR 1.705(d). As the USPTO does not calculate the amount of time earned pursuant to 37 CFR 1.702(b) until the time of the issuance of the patent, the Office will consider any request for reconsideration of the patent term adjustment due to an error in the calculation of 37 CFR 1.702(b) to be timely if the request for reconsideration is filed within two months of the issuance of the patent. However, as to all other bases for contesting the initial determination of patent term adjustment received with the notice of allowance, applicant must timely file an application for patent term adjustment prior to the payment of the issue fee[1].

The Office acknowledges submission of the $200.00 fee set forth in 37 CFR 1.18(e) for consideration of the application for patent term adjustment under 37 CFR 1.705(b). The fee is a prerequisite prior to treatment on the merits for any petition under 37 CFR 1.705(b) and is not subject to refund. Thus, applicants' request for refund of the fee is dismissed.

Any request for reconsideration of the patent term adjustment indicated on the patent must be timely filed within 2 months after issuance pursuant to 37 CFR 1.705(d) and **must** include payment of the required fee under 37 CFR 1.18(e).

The Office of Data Management has been advised of this decision. This application is being referred to the Office of Data Management for issuance of the patent.

Telephone inquiries specific to this decision should be directed to Attorney Derek Woods at (571) 272-3232.

/ALESIA M. BROWN/

Alesia Brown
Senior Petitions Attorney
Office of Petitions
Office of the Deputy Commissioner
for Patent Examination Policy

---

[1] For example, if applicant disputes both the calculation of patent term adjustment under 37 CFR 1.702(a)(1) for Office failure to mail a first Office action or notice of allowance not later than fourteen months after the date on which the application was filed and under 37 CFR 1.702(b) for Office failure to issue a patent within three years of the actual filing date of the application, then applicant must still timely file an application for patent term adjustment prior to the payment of the issue fee to contest the calculation of Office delay in issuing a first Office action or notice of allowance. See 37 CFR 1.705(b) and 35 U.S.C. 154(b)(3)(B). A dispute as to the calculation of the §1.702(a)(1) period raised on request for reconsideration of patent term adjustment under 37 CFR 1.705(d) will be dismissed as untimely filed.

UNITED STATES PATENT AND TRADEMARK OFFICE

UNITED STATES DEPARTMENT OF COMMERCE
United States Patent and Trademark Office
Address: COMMISSIONER FOR PATENTS
P.O. Box 1450
Alexandria, Virginia 22313-1450
www.uspto.gov

APPL NO.	FILING OR 371 (c) DATE	ART UNIT	FIL FEE REC'D	ATTY.DOCKET NO	DRAWINGS	TOT CLMS	IND CLMS
11/075,393	03/08/2005	3627	1180	038786-0164	9	21	3

CONFIRMATION NO. 8116

UPDATED FILING RECEIPT

OC000000016215991

26371
FOLEY & LARDNER
777 EAST WISCONSIN AVENUE
SUITE 3800
MILWAUKEE, WI 53202-5308

Date Mailed: 06/08/2005

Receipt is acknowledged of this regular Patent Application. It will be considered in its order and you will be notified as to the results of the examination. Be sure to provide the U.S. APPLICATION NUMBER, FILING DATE, NAME OF APPLICANT, and TITLE OF INVENTION when inquiring about this application. Fees transmitted by check or draft are subject to collection. Please verify the accuracy of the data presented on this receipt. **If an error is noted on this Filing Receipt, please mail to the Commissioner for Patents P.O. Box 1450 Alexandria Va 22313-1450. Please provide a copy of this Filing Receipt with the changes noted thereon. If you received a "Notice to File Missing Parts" for this application, please submit any corrections to this Filing Receipt with your reply to the Notice. When the USPTO processes the reply to the Notice, the USPTO will generate another Filing Receipt incorporating the requested corrections (if appropriate).**

Applicant(s)

Alexander Grendel, Bad Schonborn, GERMANY;
Renate Stanke, Saarbrucken, GERMANY;

Assignment For Published Patent Application

SAP Aktiengesellschaft

Power of Attorney: The patent practitioners associated with Customer Number **26371**.

Domestic Priority data as claimed by applicant

This appln claims benefit of 60/551,221 03/08/2004
and claims benefit of 60/563,284 04/16/2004

Foreign Applications

If Required, Foreign Filing License Granted: 03/30/2005

The country code and number of your priority application, to be used for filing abroad under the Paris Convention, is US11/075,393

Projected Publication Date: 09/15/2005

Non-Publication Request: No

Early Publication Request: No

BEST AVAILABLE COPY

Title

Method and system for flexible budgeting in a purchase order system

Preliminary Class

705

LICENSE FOR FOREIGN FILING UNDER
Title 35, United States Code, Section 184
Title 37, Code of Federal Regulations, 5.11 & 5.15

GRANTED

The applicant has been granted a license under 35 U.S.C. 184, if the phrase "IF REQUIRED, FOREIGN FILING LICENSE GRANTED" followed by a date appears on this form. Such licenses are issued in all applications where the conditions for issuance of a license have been met, regardless of whether or not a license may be required as set forth in 37 CFR 5.15. The scope and limitations of this license are set forth in 37 CFR 5.15(a) unless an earlier license has been issued under 37 CFR 5.15(b). The license is subject to revocation upon written notification. The date indicated is the effective date of the license, unless an earlier license of similar scope has been granted under 37 CFR 5.13 or 5.14.

This license is to be retained by the licensee and may be used at any time on or after the effective date thereof unless it is revoked. This license is automatically transferred to any related applications(s) filed under 37 CFR 1.53(d). This license is not retroactive.

The grant of a license does not in any way lessen the responsibility of a licensee for the security of the subject matter as imposed by any Government contract or the provisions of existing laws relating to espionage and the national security or the export of technical data. Licensees should apprise themselves of current regulations especially with respect to certain countries, of other agencies, particularly the Office of Defense Trade Controls, Department of State (with respect to Arms, Munitions and Implements of War (22 CFR 121-128)); the Office of Export Administration, Department of Commerce (15 CFR 370.10 (j)); the Office of Foreign Assets Control, Department of Treasury (31 CFR Parts 500+) and the Department of Energy.

NOT GRANTED

No license under 35 U.S.C. 184 has been granted at this time, if the phrase "IF REQUIRED, FOREIGN FILING LICENSE GRANTED" DOES NOT appear on this form. Applicant may still petition for a license under 37 CFR 5.12, if a license is desired before the expiration of 6 months from the filing date of the application. If 6 months has lapsed from the filing date of this application and the licensee has not received any indication of a secrecy order under 35 U.S.C. 181, the licensee may foreign file the application pursuant to 37 CFR 5.15(b).

UNITED STATES PATENT AND TRADEMARK OFFICE

Commissioner for Patents
United States Patent and Trademark Office
P.O. Box 1450
Alexandria, VA 22313-1450
www.uspto.gov

MARK W. SINCELL
WILLIAMS, MORGAN & AMERSON, P.C.
SUITE 1100
10333 RICHMOND
HOUSTON TX 77042

COPY MAILED

MAY 1 1 2005

OFFICE OF PETITIONS

In re Application of	:
Alexander James Pasadyn et al.	:
Application No. 11/075,401	: DECISION GRANTING PETITION
Filed: March 8, 2005	:
Attorney Docket No:	:
2000.060400/TT3958	

This is a decision on the petition filed April 18, 2005, in response to the Notice to File Missing Parts ("Notice") mailed April 7, 2005, which is treated under 37 CFR 1.182.

The instant application was filed March 8, 2005 and a filing date was accorded. However, a "Notice" was mailed April 7, 2005 advising, amongst other things, that Figure 30 described in the specification appeared to have been omitted.

Petitioner asserts that Figure 30 was among the papers filed on March 8, 2005, and submits, *inter alia*, a "legible" postcard receipt in evidence thereof. The postcard receipt, identifies the application and acknowledges, inter alia, that the application included twenty-seven (27) sheets of drawings and bears a United States Patent and Trademark Office date-stamp of March 8, 2005. However, only twenty-six (26) sheets of drawing figures is of record and while the postcard did not specifically itemize the number of Figures, it is obvious that Figure 30 was on sheet 27 of 27. Additionally, the postcard receipt lacks any notation of non-receipt of any item listed. In view thereof, the petition is **GRANTED.**

Given the basis for granting the petition, no petition fees are due and none have been charged.

This application is being forwarded to the Office of Initial Patent Examination (OIPE) for further processing, using the application papers received in the Office on March 8, 2005 and Figure 30 on page 27 of 27 submitted on petition April 18, 2005.

Telephone inquiries regarding this decision should be directed to the undersigned Petitions Attorney at (571) 272-3212.

Patricia Faison-Ball

Patricia Faison-Ball
Senior Petitions Attorney
Office of Petitions

UNITED STATES PATENT AND TRADEMARK OFFICE

Commissioner for Patents
United States Patent and Trademark Office
P.O. Box 1450
Alexandria, VA 22313-1450
www.uspto.gov

Paper No.

MAYTAG CORPORATION
500 RENAISSANCE DR
SUITE 102, MD 0750
SAINT JOSEPH MI 50208

COPY MAILED

OCT 18 2007

OFFICE OF PETITIONS

In re Application of :
Boyle et al. : DECISION ON PETITION
Application No. 11/075,408 :
Filed: March 8, 2005 :
Attorney Docket No. 448320-85 :

This is a decision on the PETITION FOR REVIVAL OF AN APPLICATION FOR PATENT ABANDONED UNINTENTIONALLY UNDER 37 CFR 1.137(b) filed July 24, 2007.

The petition is **GRANTED**.

The above-identified application became abandoned for failure to file a timely and proper reply to the final Office action mailed December 5, 2006. This Office action set a shortened statutory period for reply of three (3) months, with extensions of time obtainable under § 1.136(a). No reply timely filed and no extension of time obtained, the application became abandoned effective March 6, 2007. A courtesy Notice of Abandonment was mailed on June 19, 2007.

The petition includes the required reply, the required statement of unintentional delay and payment of the petition fee set forth in 37 CFR § 1.17(m). No terminal disclaimer is required.

The petition also included a petition for extension of time and extension fee of $1,020. As no extension of time is obtainable outside of the maximum period for reply to the Office action (which ended June 6, 2007), this fee is being refunded to Deposit Account No. 23-1660, as authorized.

Technology Center AU 3742 has been advised of this decision. The application is, thereby, forwarded to the examiner for consideration of the reply submitted on petition filed July 24, 2007.

Telephone inquiries specific to this decision should be directed to the undersigned at (571) 272-3219.

Nancy Johnson
Senior Petitions Attorney
Office of Petitions

UNITED STATES PATENT AND TRADEMARK OFFICE

Commissioner for Patents
United States Patent and Trademark Office
P.O. Box 1450
Alexandria, VA 22313-1450
www.uspto.go

Han-Yi Lee
Bayshore Patent Group, LLC
520 Chantecler Drive
Fremont, CA 94539

COPY MAILED

SEP 1 3 2005

OFFICE OF PETITIONS

In re Application of Chen :
Application No. 11/075,410 :
Filing Date: March 8, 2005 :
Attorney Docket No. US0504 :

Decision on Petition

This is a decision on the petition filed June 6, 2005, to consider Figure 7, to be part of the application and to accord the above-identified application a filing date of June 6, 2005, the date Figure 7 was mailed to the Office.

The petition is **dismissed**.

Any request for reconsideration must be submitted within TWO (2) MONTHS from the mail date of this decision. No further petition fee is required for the request. Extensions of time under 37 CFR 1.136(a) are NOT permitted. The reconsideration request should include a cover letter entitled "Renewed Petition under 37 CFR 1.182."

The application was filed on March 8, 2005.

On April 5, 2005, the Office of Initial Patent Examination mailed a Notice stating that Figure 7 appeared to be missing. The Notice stated that, unless a petition was filed, the application would be examined without missing Figure 7.

In response, the present petition supplies the omitted item and requests that the date that the omitted item is being supplied be the filing date of the application.

Unfortunately, the petition cannot be granted until a proper supplemental declaration is filed.

The original declaration was unsigned and referred to the "specification of which is attached hereto." Petitioner has submitted a copy of the original declaration which has been signed by the inventor.

The signed declaration submitted on June 6, 2005, refers to the attached application. However, the entire application was not attached to the supplemental declaration. Accordingly, a supplemental oath or declaration by the inventor must be supplied. The supplemental oath or declaration must identify the specification to which it is directed (preferably by reference to the above-identified Application Number and the original filing date) <u>and</u> must also clearly refer to

the addition of any new subject matter. For example, since petitioner is seeking to amend the application to add Figure 7, a proper declaration might include language such as, "the specification of which was filed on March 8, 2005, as Application Number 11/075,410, and amended on June 6, 2005. I hereby declare the new subject matter filed on June 6, 2005, was part of the invention and was invented before the filing date of the original application, above identified for such invention."

As a courtesy, the Office attaches a supplemental declaration form.

The supplemental declaration must be accompanied by the surcharge required under 37 CFR 1.16(e).

Any request for reconsideration must be submitted within TWO (2) MONTHS from the mail date of this decision. No further petition fee is required for the request. Extensions of time under 37 CFR 1.136(a) are NOT permitted. The reconsideration request should include a cover letter entitled "Renewed Petition under 37 CFR 1.182." This is **not** final agency action within the meaning of 5 U.S.C. § 704.

Further correspondence with respect to this matter should be addressed as follows:

By mail: Mail Stop Petition
Commissioner for Patents
P.O. Box 1450
Alexandria, VA 22313-1450

By facsimile: (571) 273-8300
Attn: Office of Petitions

If a request for reconsideration is filed, and a decision on the new petition is not received within three months, petitioner may wish to call the number below to check on the status of the renewed petition.

If a request for reconsideration is not filed, Figure 7 will not be entered as part of the application and the application will be processed and examined using a filing date of March 8, 2005.

Telephone inquiries regarding this communication should be directed to Petitions Attorney Steven Brantley at (571) 272-3203.

Charles Steven Brantley
Senior Petitions Attorney
Office of Petitions

Attached: Supplemental Declaration Form (PTO/SB/04)

UNITED STATES PATENT AND TRADEMARK OFFICE

Commissioner for Patents
United States Patent and Trademark Office
P.O. Box 1450
Alexandria, VA 22313-1450
www.uspto.gov

BEYER WEAVER LLP
P.O. BOX 70250
OAKLAND CA 94612-0250

COPY MAILED

APR 09 2008

OFFICE OF PETITIONS

In re Application of	:	
DEJAGER, Gregory L. et al.	:	
Application No. 11/075,436	:	DECISION ON PETITION
Filed: March 07, 2005	:	TO WITHDRAW
Attorney Docket No. **CISCP057C3/11147**	:	FROM RECORD
	:	

This is a decision on the Request to Withdraw as attorney or agent of record under 37 C.F.R. § 1.36(b), filed February 13, 2008.

The request is **APPROVED**.

A grantable request to withdraw as attorney/agent of record must be signed by every attorney/agent seeking to withdraw or contain a clear indication that one attorney is signing on behalf of another/others. A request to withdraw will not be approved unless at least 30 (thirty) days would remain between the date of approval and the later of the expiration date of a time to file a response or the expiration date of the maximum time period which can be extended under 37 C.F.R. § 1.136(a).

The request was signed by James Austin. Haruo Yawata has been withdrawn as attorney or agent of record; all other attorneys remain of record. The correspondence address of record remains unchanged.

Telephone inquiries concerning this decision should be directed to Tredelle Jackson at 571-272-2783.

Tredelle D. Jackson
Petitions Examiner
Office of Petitions

UNITED STATES PATENT AND TRADEMARK OFFICE

Commissioner for Patents
United States Patent and Trademark Office
P.O. Box 1450
Alexandria, VA 22313-1450
www.uspto.gov

MCGINN INTELLECTUAL PROPERTY LAW
GROUP, PLLC
8321 OLD COURTHOUSE ROAD
SUITE 200
VIENNA VA 22182-3817

COPY MAILED

JUL 09 2008

OFFICE OF PETITIONS

In re Application of	:	
Tomochika Obiya	:	
Application No. 11/075,442	:	DECISION GRANTING PETITION
Filed: March 9, 2005	:	UNDER 37 CFR 1.137(b)
Attorney Docket No. NE-70292US	:	

This is a decision on the petition under 37 CFR 1.137(b), filed October 26, 2007, to revive the above-identified application.

The petition is **GRANTED**.

The petition satisfies the conditions for revival pursuant to the provisions of 37 CFR 1.137(b) in that (1) the reply in the form of the issue and publication fees; (2) the petition fee; and (3) the required statement of unintentional delay have been received. Accordingly, the reply to the Notice of Allowance mailed June 14, 2007, is accepted as having been unintentionally delayed.

Telephone inquiries concerning this decision should be directed to the undersigned at (571) 272-3208.

This application is being referred to the Office of Data Management to be processed into a patent.

Karen Creasy
Petitions Examiner
Office of Petitions

UNITED STATES PATENT AND TRADEMARK OFFICE

Commissioner for Patents
United States Patent and Trademark Office
P.O. Box 1450
Alexandria, VA 22313-1450
www.uspto.gov

COPY MAILED

OCT 18 2006

OFFICE OF PETITIONS

LAW OFFICE OF CHARLES W. PETERSON, JR.
11703 BOWMAN GREEN DR.
SUITE 100
RESTON VA 20190

In re Application of	:
Walter L. Peterson	:DECISION GRANTING FILING
Application No. 11/075,447	:DATE OF March 8, 2005
Filed: March 8, 2005	:
Attorney Docket No. WLP-01	:

This is a decision on the petition filed July 13, 2006, requesting that the above-identified application be accorded a filing date of March 8, 2005 rather than the presently accorded date of March 9, 2005.

Petitioner requests the earlier filing date on the basis that the application was purportedly deposited with the U.S. Postal Service (USPS) as Express Mail on March 8, 2005 pursuant to 37 CFR 1.10. In support, petitioner has submitted a copy of Express Mail Customer Online Record indicating Label No. EO907983820US showing a stamped date of March 8, 2005. The same Express Mail receipt number appears on the original "Utility Patent Application Transmittal."

In view of the above, it is concluded that the application was deposited as "Express Mail" with the USPS on March 8, 2005.

The petition is **granted**.

Telephone inquiries specific to this decision on petition should be directed to Karen Creasy at (571) 272-3208.

This matter is being referred to the Office of Initial Patent Examination for processing with a filing date of March 8, 2005 and for mailing of a corrected filing receipt.

Karen Creasy

Karen Creasy
Petitions Examiner
Office of Petitions

UNITED STATES PATENT AND TRADEMARK OFFICE

Commissioner for Patents
United States Patent and Trademark Office
P.O. Box 1450
Alexandria, VA 22313-1450
www.uspto.gov

COPY MAILED

MAR 23 2009

OFFICE OF PETITIONS

VERIZON
PATENT MANAGEMENT GROUP
1320 NORTH COURT HOUSE ROAD
9TH FLOOR
ARLINGTON, VA 22201-2909

In re Application of	:	
Michael D. O'Dell et al	:	
Application No. 11/075,454	:	ON PETITION
Filed: March 9, 2005	:	
Attorney Docket No. UUN99001C1	:	

This is a decision on the petition under 37 CFR 1.137(b), filed February 27, 2009, to revive the above-identified application.

The petition is **GRANTED.**

The above-identified application became abandoned for failure to reply in a timely manner to the non-final Office action mailed April 30, 2008, which set a shortened statutory period for reply of three (3) months. No extension of time under the provisions of 37 CFR 1.136(a) were obtained. Accordingly, the above-identified application became abandoned on July 31, 2008.

The file does not indicate a change of address has been submitted, although the address given on the petition differs from the address of record. If appropriate, a change of address should be filed in accordance with MPEP 601.03. A courtesy copy of this decision is being mailed to the address given on the petition; however, the Office will mail all future correspondence solely to the address of record.

Telephone inquiries concerning this decision should be directed to Irvin Dingle at (571) 272-3210.

This matter is being referred to Technology Center AU 2419 for further processing.

Irvin Dingle
Petitions Examiner
Office of Petitions

cc: Phouphanomketh Ditthavong
918 Prince Street
Alexandria, VA 22314

RECEIVED
CENTRAL FAX CENTER
DEC 0 8 2005

IN THE UNITED STATES PATENT AND TRADEMARK OFFICE

IN RE UTILITY PATENT APPLICATION OF:

APPLICANT	:	**McDonald**
SERIAL NO.	:	**11/075,460**
FILED	:	**March 9, 2005**
EXAMINER	:	**E.M. Cole**
ART UNIT	:	**1771**
FOR	:	**Concrete Curing Blanket**
CUSTOMER NO.	:	**56500**
DATE	:	**December 8, 2005**

CERTIFICATE OF FACSIMILE TRANSMISSION

Facsimile No.: 571/273-8300 Transmission Date: December 8, 2005

I certify that this correspondence is being transmitted via facsimile, under 37 C.F.R. §1.8, on the date indicated above to the facsimile number indicated above.

William A. Bonk, III

MAIL STOP PETITION
Commissioner for Patents
P.O. Box 1450
Alexandria, VA 22313-1450

Sir:

PETITION TO MAKE APPLICATION SPECIAL
35 U.S.C. §131; 37 C.F.R. §1.102

Applicant petitions to make special to advance out of turn for examination or further action the above-identified Application because of actual infringement of claims of the Application. Assignee of the Application submits herewith a Statement by the Assignee, a certificate under 37 C.F.R §3.73(b) verifying Assignee's right to prosecute same and this Petition.

A. ACTUAL INFRINGEMENT

A device or product actually is on the market and/or a process actually is in use that falls within the claims of the Application. Applicant submits copies of documents evidencing same.

12/08/2005 TL0111 00000040 11075460
01 FC:1464 130.00 OP

PETITION GRANTED

William Krynski
Special Program Examiner
Technology Center 1700

DEC 2 2 2005

UNITED STATES PATENT AND TRADEMARK OFFICE

Commissioner for Patents
United States Patent and Trademark Office
P.O. Box 1450
Alexandria, VA 22313-1450
www.uspto.gov

HOWSON AND HOWSON
CATHY A. KODROFF
ONE SPRING HOUSE CORPORATE CENTER
BOX 457
SPRING HOUSE, PA 19477

COPY MAILED

NOV 22 2005

OFFICE OF PETITIONS

In re Application of :
Bayever et al. :
Application No. 11/075,509 :
Filed: March 9, 2005 :
Attorney Docket No. AM-101608 :
For: Antineoplastic Combinations of :
CCI-779 and Rituximab :

Decision According Status
Under 37 CFR 1.47(a)

This is a decision on the petition under 37 CFR 1.47(a), filed August 17, 2005.

The petition is **granted**.

The above-identified application and papers have been reviewed and found in compliance with 37 CFR 1.47(a). This application is hereby accorded Rule 1.47(a) status.

As provided in Rule 1.47(c), this Office will forward notice of this application's filing to the non-signing inventor at the address given in the petition. Notice of the filing of this application will also be published in the Official Gazette.

The Office of Initial Patent Examination will be informed of the instant decision so that it may continue to prepare the application for examination.

Telephone inquiries regarding this communication should be directed to Petitions Attorney Steven Brantley at (571) 272-3203.

Charles Steven Brantley
Senior Petitions Attorney
Office of Petitions

UNITED STATES PATENT AND TRADEMARK OFFICE

Commissioner for Patents
United States Patent and Trademark Office
P.O. Box 1450
Alexandria, VA 22313-1450
www.uspto.gov

MAILED

JUL 02 2010

OFFICE OF PETITIONS

FISH & RICHARDSON P.C.
PO BOX 1022
MINNEAPOLIS MN 55440-1022

In re Patent No. 7,620,458	: DECISION ON REQUEST FOR
Friedman et al.	: RECONSIDERATION OF
Issue Date: November 17, 2009	: PATENT TERM ADJUSTMENT
Application No. 11/075,513	: AND
Filed: March 8, 2005	: NOTICE OF INTENT TO ISSUE
Attorney Docket No. 07039-508001	: CERTIFICATE OF CORRECTION

This is a decision on the petition filed on January 13, 2010, which is being treated as a petition under 37 CFR 1.705(d) requesting that the patent term adjustment indicated on the above-identified patent be corrected to indicate that the term of the above-identified patent is extended or adjusted by one thousand thirty-five (1035) days.

The petition to correct the patent term adjustment indicated on the above-identified patent to indicate that the term of the above-identified patent is extended or adjusted by one thousand thirty-five (1035) days is **GRANTED**.

The Office acknowledges submission of the $200.00 fee set forth in 37 CFR 1.18(e). No additional fees are required.

The application is being forwarded to the Certificates of Correction Branch for issuance of a certificate of correction. The Office will issue a certificate of correction indicating that the term of the above-identified patent is extended or adjusted by **one thousand thirty-five (1035) days**.

Telephone inquiries specific to this matter should be directed to the undersigned at (571) 272-3211.

Christina Tartera Donnell

Christina Tartera Donnell
Senior Petitions Attorney
Office of Petitions

Enclosure: Copy of DRAFT Certificate of Correction

UNITED STATES PATENT AND TRADEMARK OFFICE

CERTIFICATE OF CORRECTION

PATENT : 7,620,458 B2

DATED : Nov. 17, 2009 **DRAFT**

INVENTOR(S) : Friedman et al.

It is certified that error appears in the above-identified patent and that said Letters Patent is hereby corrected as shown below:

On the cover page,

[*] Notice: Subject to any disclaimer, the term of this patent is extended or adjusted under 35 USC 154(b) by 614 days

Delete the phrase "by 614 days" and insert – by 1035 days--

Day : Wednesday

PALM INTRANET

Date: 6/30/2010
Time: 12:48:03

PTA Calculations for Application: 11/075513			
Application Filing Date:	03/08/2005	PTO Delay (PTO):	647
Issue Date of Patent:	11/17/2009	Three Years:	0
Pre-Issue Petitions:	0	Applicant Delay (APPL):	33
Post-Issue Petitions:	0	Total PTA (days):	1035
PTO Delay Adjustment:	421		

File Contents History

Number	Date	Contents Description	PTO	APPL	START
59	06/30/2010	ADJUSTMENT OF PTA CALCULATION BY PTO	421		
54.5	10/28/2009	PTA 36 MONTHS			
54	11/17/2009	PATENT ISSUE DATE USED IN PTA CALCULATION			
53	10/16/2009	EXPORT TO FINAL DATA CAPTURE			
52	10/15/2009	DISPATCH TO FDC			
51	10/14/2009	APPLICATION IS CONSIDERED READY FOR ISSUE			
50	10/08/2009	ISSUE FEE PAYMENT VERIFIED			
49	10/08/2009	ISSUE FEE PAYMENT RECEIVED			
48	08/18/2009	FINISHED INITIAL DATA CAPTURE			
47	07/17/2009	EXPORT TO INITIAL DATA CAPTURE			
44	07/16/2009	MAIL NOTICE OF ALLOWANCE			
43	07/14/2009	ISSUE REVISION COMPLETED			
42	07/14/2009	DOCUMENT VERIFICATION			
41	07/14/2009	NOTICE OF ALLOWANCE DATA VERIFICATION COMPLETED			
40	07/13/2009	NOTICE OF ALLOWABILITY			
36	05/05/2009	DATE FORWARDED TO EXAMINER			
35	05/04/2009	AMENDMENT SUBMITTED/ENTERED WITH FILING OF CPA/RCE			
34	05/05/2009	DATE FORWARDED TO EXAMINER			
33	05/04/2009	REQUEST FOR CONTINUED EXAMINATION (RCE)			
32	05/05/2009	DISPOSAL FOR A RCE / CPA / R129			
31	05/04/2009	WORKFLOW - REQUEST FOR RCE - BEGIN			
30	02/10/2009	ELECTRONIC REVIEW			

29	02/10/2009	EMAIL NOTIFICATION			
28	02/10/2009	MAIL FINAL REJECTION (PTOL - 326)			
27	02/05/2009	FINAL REJECTION			
26	12/05/2008	DATE FORWARDED TO EXAMINER			
25	11/17/2008	RESPONSE AFTER NON-FINAL ACTION		33	23
24	11/17/2008	REQUEST FOR EXTENSION OF TIME - GRANTED			
23	07/15/2008	MAIL NON-FINAL REJECTION			
22	07/14/2008	NON-FINAL REJECTION			
21	06/26/2006	INFORMATION DISCLOSURE STATEMENT CONSIDERED			
20	05/16/2008	DATE FORWARDED TO EXAMINER			
19	04/03/2008	RESPONSE TO ELECTION / RESTRICTION FILED			
18	04/03/2008	REQUEST FOR EXTENSION OF TIME - GRANTED			
17	02/14/2008	MAIL RESTRICTION REQUIREMENT	647		-1
16	02/14/2008	REQUIREMENT FOR RESTRICTION / ELECTION			
15	10/17/2007	WITHDRAW FLAGGED FOR 5/25			
14	10/16/2007	FLAGGED FOR 5/25			
13	06/26/2006	REFERENCE CAPTURE ON IDS			
12.7	06/26/2006	INFORMATION DISCLOSURE STATEMENT (IDS) FILED			
12	06/26/2006	INFORMATION DISCLOSURE STATEMENT (IDS) FILED			
11	06/07/2006	IFW TSS PROCESSING BY TECH CENTER COMPLETE			
10	06/06/2006	CASE DOCKETED TO EXAMINER IN GAU			
9	06/14/2005	APPLICATION DISPATCHED FROM OIPE			
8	06/14/2005	APPLICATION IS NOW COMPLETE			
7	06/06/2005	ADDITIONAL APPLICATION FILING FEES			
6	06/06/2005	A STATEMENT BY ONE OR MORE INVENTORS SATISFYING THE REQUIREMENT UNDER 35 USC 115, OATH OF THE APPLIC			
5	04/04/2005	NOTICE MAILED--APPLICATION INCOMPLETE--FILING DATE ASSIGNED			
3	03/29/2005	CLEARED BY OIPE CSR			
2	03/23/2005	IFW SCAN & PACR AUTO SECURITY REVIEW			
1	03/08/2005	INITIAL EXAM TEAM NN			

Search Another: Application# Search

EXPLANATION OF PTA CALCULATION

EXPLANATION OF PTE CALCULATION

To go back, right click here and select Back. To go forward, right click here and select Forward. To refresh, right click here and select Refresh.

Back to OASIS | Home page

UNITED STATES PATENT AND TRADEMARK OFFICE

Commissioner for Patents
United States Patent and Trademark Office
P.O. Box 1450
Alexandria, VA 22313-1450
www.uspto.gov

WINSTON & STRAWN LLP
1700 K ST NW
WASHINGTON DC 20006

COPY MAILED

JAN 0 9 2006

OFFICE OF PETITIONS

In re Application of	:	
Kierspe, et al.	:	
Application No. 11/075,524	:	
Filing Date: March 9, 205	:	DECISION REFUSING
Attorney Docket No. 083470-4200	:	STATUS UNDER § 1.47(a)

This is in response to the petition under 37 CFR 1.47, filed December 5, 2005, which is being treated as a petition under 37 CFR 1.47(a).

The petition under 37 CFR 1.47(a) is **DISMISSED**.

Rule 47 applicant is given TWO MONTHS from the mailing date of this decision to reply, correcting the below-noted deficiencies. Any reply should be entitled "Request for Reconsideration of Petition Under 37 CFR 1.47(a)," and should only address the deficiencies noted below, except that the reply may include an oath or declaration executed by the non-signing inventors. **Failure to respond will result in abandonment of the application.** Any extensions of time will be governed by 37 CFR 1.136(a).

The above-identified application was filed on March 9, 2005. On May 6, 2005, the Office of Initial Patent Examination mailed a

Notice to File Missing Parts, requiring a oath or declaration, a surcharge for its late filing, the statutory basic filing fee, examination fee, search fee, and replacement drawings. In response, applicants filed the instant petition on December 5, 2005, made timely by obtaining a five month extension of time. Accompanying the petition was a declaration executed by joint inventors George Kierspe, John Bacile, Scott W. Smith, and Brian D. Hulse, but with the signature block for inventor William J. Hartig left blank.

A grantable petition under 37 CFR 1.47(a) requires: (1) proof that the non-signing inventor(s) cannot be reached or refuses to sign the oath or declaration after having been presented with the application papers (specification, claims and drawings); (2) an acceptable oath or declaration in compliance with 37 CFR 1.63; (3) the petition fee; and (4) a statement of the last known address of the non-signing inventor(s). The instant petition does not satisfy requirement (1).

As to requirement (1), there has been no showing that non-signing inventor Hartig was presented with the application papers (specification, claims, drawings, oath or declaration). Rather, the petition only establishes that Hartig was forwarded a copy of the declaration and assignment papers. Regarding this, the Manual of Patent Examining Procedure states:

> A refusal by an inventor to sign an oath or declaration when the inventor has not been presented with the application papers does not itself suggest that the inventor is refusing to join the application unless it is clear that the inventor understands exactly what he or she is being asked to sign and refuses to accept the application papers.
>
> It is reasonable to require that the inventor be presented with the application papers before a petition under 37 CFR 1.47 is granted since such a procedure ensures that the inventor is apprised of the application to which the oath or declaration is directed. In re Gray, 115 U.S.P.Q. 80 Comm'r Pat. 1956).

Proof that a *bona fide* attempt was made to present a copy of the application papers (specification, including claims, drawings, and oath or declaration) to the nonsigning inventor for signature, but the inventor refused to accept delivery of the papers or expressly stated that the application papers should not

be sent, may be sufficient.[1]

If the non-signing inventor can not be located, applicant must demonstrate diligent effort in finding the inventor. "[A]n affidavit or declaration of facts should be submitted that fully describes the exact facts which are relied on to establish that a diligent effort was made."[2] Documentary evidence, such as a certified mail return receipt or copies of an internet search, to support such a finding[3].

Further correspondence with respect to this matter should be addressed as follows:

By mail: Mail Stop Petitions
Commissioner for Patents
P.O. Box 1450
Alexandria VA 22313-1450

By FAX: (571)273-8300
Attn: Office of Petitions

Telephone inquiries concerning this decision may be directed to the undersigned at (571)272-3207.

Cliff Congo
Petitions Attorney
Office of Petitions

---

[1] MPEP 409.03(d).

[2] MPEP 409.03(d).

[3] Such documentary evidence should be made part of the affidavit or declaration. See id.

UNITED STATES PATENT AND TRADEMARK OFFICE

Commissioner for Patents
United States Patent and Trademark Office
P.O. Box 1450
Alexandria, VA 22313-1450
www.uspto.gov

WINSTON & STRAWN LLP
1700 K ST NW
WASHINGTON DC 20006

COPY MAILED
APR 12 2006
OFFICE OF PETITIONS

In re Application of	:	
Kierspe, et al.	:	
Application No. 11/075,524	:	
Filing Date: March 9, 205	:	DECISION REFUSING
Attorney Docket No. 083470-4200	:	STATUS UNDER § 1.47(a)

This is in response to the renewed petition under 37 CFR 1.47(a), filed February 16, 2006.

The petition under 37 CFR 1.47(a) is **DISMISSED**.

Rule 47 applicant is given TWO MONTHS from the mailing date of this decision to reply, correcting the below-noted deficiencies. Any reply should be entitled "Request for Reconsideration of Petition Under 37 CFR 1.47(a)," and should only address the deficiencies noted below, except that the reply may include an oath or declaration executed by the non-signing inventors. **Failure to respond will result in abandonment of the application.** Any extensions of time will be governed by 37 CFR 1.136(a).

The above-identified application was filed on March 9, 2005. On May 6, 2005, the Office of Initial Patent Examination mailed a Notice to File Missing Parts, requiring a oath or declaration, a

surcharge for its late filing, the statutory basic filing fee, examination fee, search fee, and replacement drawings. In response, applicants filed a 37 CFR 1.47(a) petition on December 5, 2005, made timely by obtaining a five month extension of time. Accompanying the petition was a declaration executed by joint inventors George Kierspe, John Bacile, Scott W. Smith, and Brian D. Hulse, but with the signature block for inventor William J. Hartig left blank. However, the petition was dismissed in a decision mailed on January 9, 2006. Petitioner had not submitted sufficient documentary evidence that a diligent effort had been made to locate Hartig.

A grantable petition under 37 CFR 1.47(a) requires: (1) proof that the non-signing inventor(s) cannot be reached or refuses to sign the oath or declaration after having been presented with the application papers (specification, claims and drawings); (2) an acceptable oath or declaration in compliance with 37 CFR 1.63; (3) the petition fee; and (4) a statement of the last known address of the non-signing inventor(s). The instant petition does not satisfy requirement (2).

As to requirement (2), a further review of the file reveals that petitioner has not supplied the mailing address and residence of Hartig, in either the oath or declaration or an ADS, pursuant to 37 CFR 1.63(c)(1).

Further correspondence with respect to this matter should be addressed as follows:

By mail: Mail Stop Petitions
Commissioner for Patents
P.O. Box 1450
Alexandria VA 22313-1450

By FAX: (571)273-8300
Attn: Office of Petitions

Telephone inquiries concerning this decision may be directed to the undersigned at (571)272-3207.

Cliff Congo
Petitions Attorney
Office of Petitions

UNITED STATES PATENT AND TRADEMARK OFFICE

Commissioner for Patents
United States Patent and Trademark Office
P.O. Box 1450
Alexandria, VA 22313-1450
www.uspto.gov

WINSTON & STRAWN LLP
1700 K ST NW
WASHINGTON DC 20006

COPY MAILED
MAY 3 0 2006
OFFICE OF PETITIONS

In re Application of	:	
Kierspe, et al.	:	
Application No. 11/075,524	:	
Filing Date: March 9, 205	:	DECISION ACCORDING
Attorney Docket No. 083470-4200	:	STATUS UNDER § 1.47(a)

This is in response to the renewed petition under 37 CFR 1.47(a), filed May 3, 2006.

The petition under 37 CFR 1.47(a) is **GRANTED**.

The above-identified application was filed on March 9, 2005. On May 6, 2005, the Office of Initial Patent Examination mailed a Notice to File Missing Parts, requiring a oath or declaration, a surcharge for its late filing, the statutory basic filing fee, examination fee, search fee, and replacement drawings. In response, applicants filed A 37 CFR 1.47(a) petition on December 5, 2005, made timely by obtaining a five month extension of time. Accompanying the petition was a declaration executed by joint inventors George Kierspe, John Bacile, Scott W. Smith, and Brian D. Hulse, but with the signature block for inventor William J. Hartig left blank. However, the petition was dismissed in a decision mailed on January 9, 2006. Petitioner had not demonstrated diligent effort in attempting to locate Hartig.

Applicants filed a renewed petition on February 16, 2006. However, the petition was dismissed in a decision mailed on April 12, 2006. While petitioner included sufficient documentary evidence to conclude that diligent effort was made to locate Hartig, petitioner did not submit an oath or declaration containing the mailing address and residence of Hartig.

With the instant renewed petition, petitioner has submitted a declaration containing the mailing address and residence of Hartig.

The above-identified application and papers have been reviewed and found to be in compliance with 37 CFR 1.47(a). Accordingly, the above-identified application is hereby accorded Rule 1.47(a) status. As provided in 37 CFR 1.47(c), this Office will forward notice of this application's filing to the non-signing inventor at the last known address provided in the petition. Notice of the filing of this application will also be published in the Official Gazette.

The application is being forwarded to the Office of Initial Patent Examination for pre-examination processing.

Telephone inquiries concerning this decision may be directed to the undersigned at (571)272-3207.

Cliff Congo
Petitions Attorney
Office of Petitions

UNITED STATES PATENT AND TRADEMARK OFFICE

Commissioner for Patents
United States Patent and Trademark Office
P.O. Box 1450
Alexandria, VA 22313-1450
www.uspto.gov

WILLIAM J HARTIG
1032 SEABROOK WAY
CINCINNATI OH 45245

COPY MAILED
MAY 3 0 2006
OFFICE OF PETITIONS

In re Application of :
Kierspe, et al. :
Application No. 11/075,524 :
Filed: March 9, 2005 : LETTER
Title: Mobile Power System Emissions :
Control

Dear Mr. Hartig:

You are named as a joint inventor in the above-identified United States patent application filed under the provisions of 35 USC 116 (United States Code) and 37 CFR 1.47(a), Rules of Practice in Patent Cases. Should a patent be granted on the application you will be designated therein as a joint inventor.

As a named inventor you are entitled to inspect any paper in the file wrapper of the application, order copies of all or any part thereof (at a prepaid cost per 37 CFR 1.19) or make your position of record in the application. Alternatively, you may arrange to do any of the preceding through a registered patent attorney or agent presenting written authorization from you. If you care to join the application, agent of record (see below) would presumably assist you. Joining in the application would entail the filing of an appropriate oath or declaration by you pursuant to 37 CFR 1.63.

Telephone inquiries regarding this communication should be directed to Petitions Attorney Cliff Congo at (571)272-3207. Requests for information regarding your application should be directed to the File Information Unit at (703) 308-2733. Information regarding how to pay for and order a copy of the application, or a specific paper in the application, should be directed to the Certification Division at (703) 308-9726 or 1-800-972-6382 (outside the Washington D.C. area).

Cliff Congo

Cliff Congo
Petitions Attorney
Office of Petitions

Howard I. Shin
Winston & Strawn
1700 K St NW
Washington DC 20006
phone: 212-294-6700

UNITED STATES PATENT AND TRADEMARK OFFICE

Commissioner for Patents
United States Patent and Trademark Office
P.O. Box 1450
Alexandria, VA 22313-1450
www.uspto.gov

Brinks, Hofer, Gilson & Lione
P.O. Box 10395
Chicago, IL 60610

COPY MAILED

JUN 08 2009

OFFICE OF PETITIONS

In re Application of	:	
George Kierspe et al.	:	
Application No. 11/075,524	:	DECISION ON PETITION
Filed: March 9, 2005	:	TO WITHDRAW
Attorney Docket No. 541282000400	:	FROM RECORD
	:	

This is a decision on the Request to Withdraw as attorney or agent of record under 37 C.F.R. § 1.36(b), filed November 3, 2005.

The request is **moot because a revocation of power of attorney has been filed**.

A review of the file record indicates that the power of attorney to Alex Chartove and all attorneys/agents of record has been revoked by the assignee of the patent application on December 5, 2005. Accordingly, the request to withdraw under 37 C.F.R. § 1.36(b) is moot.

All future communications from the Office will continue to be directed to the below-listed address until otherwise notified by applicant.

Telephone inquires concerning this decision should be directed to Kimberly Inabinet at 571-272-4618.

Kimberly Inabinet
Petitions Examiner
Office of Petitions

cc: WINSTON & STRAWN LLP
PATENT DEPARTMENT
1700 K STREET, N.W.
WASHINGTON DC 20006

UNITED STATES PATENT AND TRADEMARK OFFICE

Commissioner for Patents
United States Patent and Trademark Office
P.O. Box 1450
Alexandria, VA 22313-1450
www.uspto.gov

COPY MAILED
OCT 1 2 2006
OFFICE OF PETITIONS

RONALD E, ANDERMANN
719 S. RIDGE AVENUE
ARLINGTON HEIGHTS, IL 60005

In re Application of	:	
Tennett, et al.	:	
Application No. 11/075,558	:	DECISION ON PETITION
Filed: March 9, 2005	:	TO WITHDRAW
Attorney Docket No. 20050812A	:	FROM RECORD
	:	

This is a decision on the Request to Withdraw as attorney or agent of record under 37 C.F.R. § 1.36(b) filed June 16, 2006.

The request is **APPROVED**.

A grantable request to withdraw as attorney/agent of record must be signed by every attorney/agent seeking to withdraw or contain a clear indication that one attorney is signing on behalf of another/others. A request to withdraw will not be approved unless at least 30 (thirty) days would remain between the date of approval and the later of the expiration date of a time to file a response or the expiration date of the maximum time period which can be extended under 37 C.F.R. § 1.136(a).

The request was signed by Ronald E. Andermann on behalf of all attorneys of record.

All attorneys/agents associated with this application have been withdrawn.

Applicant is reminded that there is no attorney of record at this time.

The correspondence address of record has been changed and the new correspondence address is the address indicated below.

There is an outstanding Office action mailed March 28, 2006 that requires a reply from the applicant.

Telephone inquiries concerning this decision should be directed to April Wise at 571-272-1642.

April M. Wise
Petitions Examiner
Office of Petitions

cc: MR. DANIEL TENNETT
105 WOODLAKE BOULEVARD
APT. 3311
GUMEE, IL 60031

UNITED STATES PATENT AND TRADEMARK OFFICE

Commissioner for Patents
United States Patent and Trademark Office
P.O. Box 1450
Alexandria, VA 22313-1450
www.uspto.gov

GOODWIN PROCTER LLP
PATENT ADMINISTRATOR
EXCHANGE PLACE
BOSTON, MA 02109-2881

COPY MAILED

SEP 0 6 2007

OFFICE OF PETITIONS

In re Application of
Dale S. Dhanoa et al
Application No. 11/075,565
Filed: March 8, 2005
Attorney Docket No. EPX-010 C2

DECISION ON PETITION
UNDER 37 CFR 1.78(a)(6)

This is a decision on the petition treated under 37 CFR 1.78(a)(6), filed July 17, 2007, to accept an unintentionally delayed claim under 35 U.S.C. §119(e) for the benefit of prior-filed provisional Application No. 60/458,831, filed March 31, 2003, as set forth in the concurrently filed amendment and a Supplemental Application Data Sheet.

The petition is **DISMISSED**.

A petition under 37 CFR 1.78(a)(6) is only applicable to those applications filed on or after November 29, 2000. Further, the petition is appropriate only after expiration of the period specified in 37 CFR 1.78(a)(5)(ii) and must be filed during the pendency of the nonprovisional application. In addition, the petition must be accompanied by:

(1) the reference required by 35 U.S.C. § 119(e) and 37 CFR 1.78(a)(5)(i) to the prior-filed application, unless previously submitted;
(2) the surcharge set forth in § 1.17(t); and
(3) a statement that the entire delay between the date the claim was due under 37 CFR 1.78(a)(5)(ii) and the date the claim was filed was unintentional. The Director may require additional information where there is a question whether the delay was unintentional.

The petition fails to satisfy item (1) above.

The reference to add the above-noted, prior-filed provisional application on page one following the first sentence of the specification is not acceptable as drafted since it improperly incorporates by reference the prior-filed application. An incorporation by reference statement added after an application's filing date is not effective because no new matter can be added to an application after its filing date (*see* 35 U.S.C. § 132(a)). If an incorporation by reference statement is included in an amendment to the specification to add a benefit claim under 35 U.S.C. § 120 after the filing date of the application, the amendment would not be proper. When a benefit claim under 35 U.S.C. § 120 is submitted after the filing of an application, the reference to the prior application cannot include an incorporation by reference statement of the prior application. *See* Dart Industries v. Banner, 636 F.2d 684, 207 USPQ 273 (C.A.D.C. 1980). *Note* MPEP §§ 201.06(c) and 608.04(b). Accordingly, the amendment itself is not proper.

However, while the Supplemental Application Data Sheet properly sets forth the claim for priority to the prior-filed applications, it is not signed in accordance with 37 CFR 1.33(b). Accordingly, the Application Data Sheet is not acceptable for this reason.

If reconsideration of this decision is desired, a renewed petition under 37 CFR 1.78(a)(6) and an amendment or a Supplemental Application Data Sheet which corrects the above matters are required.

The rule at 37 CFR § 1.78(a)(6) requires a statement that the entire delay between the date the claim was due under 37 CFR § 1.78(a)(5)(ii) and the date the claim was filed was unintentional. Since the statement appearing in the petition varies from the required language, the statement is being construed as the statement required by 37 CFR §1.78(a)(6). If this is not a correct reading of the statement appearing in the petition, petitioner should promptly notify the Office.

Further correspondence with respect to this matter should be addressed as follows:

By mail: Mail Stop PETITIONS
Commissioner for Patents
Post Office Box 1450
Alexandria, VA 22313-1450

By hand: Customer Service Window
Mail Stop Petitions
Randolph Building
401 Dulany Street
Alexandria, VA 22314

By fax: (571) 273-8300
ATTN: Office of Petitions

Correspondence regarding this decision may also be filed through the Electronic Filing System of the USPTO.

To expedite consideration, petitioner may wish to contact the undersigned regarding the filing of the renewed petition under 37 CFR §§ 1.78(a)(3) and 1.78(a)(6).

Any questions concerning this matter may be directed to the undersigned at (571) 272-3218.

Frances Hicks
Petitions Examiner
Office of Petitions

UNITED STATES PATENT AND TRADEMARK OFFICE

Commissioner for Patents
United States Patent and Trademark Office
P.O. Box 1450
Alexandria, VA 22313-1450
www.uspto.gov

GOODWIN PROCTER LLP
PATENT ADMINISTRATOR
EXCHANGE PLACE
BOSTON MA 02109-2881

COPY MAILED

SEP 2 5 2008

OFFICE OF PETITIONS

In re Application of	:	
Dhanoa, et al.	:	
Application No. 11/075,565	:	DECISION ON PETITION
Filed: March 8, 2005	:	UNDER 37 CFR 1.78(a)(6)
Attorney Docket No. EPX-010CP2	:	

This is a decision on the renewed petition under 37 CFR 1.78(a)(6), filed July 8, 2008, to accept an unintentionally delayed claim under 35 U.S.C. § 119(e) for the benefit of priority to a prior-filed provisional application.

The petition is **DISMISSED.**

A petition under 37 CFR 1.78(a)(6) is only applicable to those applications filed on or after November 29, 2000. Further, the petition is appropriate only after expiration of the period specified in 37 CFR 1.78(a)(5)(ii) and must be filed during the pendency of the nonprovisional application. In addition, the petition must be accompanied by:

(1) the reference required by 35 U.S.C. § 119(e) and 37 CFR 1.78(a)(5)(i) to the prior-filed application, unless previously submitted;
(2) the surcharge set forth in § 1.17(t); and
(3) a statement that the entire delay between the date the claim was due under 37 CFR 1.78(a)(5)(ii) and the date the claim was filed was unintentional. The Director may require additional information where there is a question whether the delay was unintentional.

This application is pending and nonprovisional Application No. 10/815,417 was filed on March 31, 2004, within twelve months of the filing date of the prior-filed provisional application, Application No. 60/458,831, which was filed on March 31, 2003, and for which priority is claimed. A reference to the prior-filed provisional application has been included in an amendment to the first sentence of the specification following the title.

However, the amendment is not acceptable as drafted because it states that Application No. 10/947,995, filed September 23, 2004, claims *direct* benefit of priority to Application No. 60/458,831, filed March 31, 2003. Provisional Application No. 60/458,831 expired on March 31, 2004.

Therefore, there is no copendency between it and Application No. 10/947,995, filed on September 23, 2004.

Accordingly, before the petition under 37 CFR 1.78(a)(6) can be granted, a renewed petition under 37 CFR 1.78(a)(6) and either a signed Application Data Sheet or a substitute amendment (complying with 37 CFR 1.121 and 37 CFR 1.76(b)(5)) deleting the portion of the amendment stating that Application No. 10/947,995, filed September 23, 2004, claims direct benefit of priority to Application No. 60/458,831, filed March 31, 2003, are required.

Regarding fees, only one petition fee is required. Petitioner has paid two petition fees. Deposit account no. 07-1700 will be credited $1,410.00.

Further correspondence with respect to this matter should be addressed as follows:

By mail: Mail Stop PETITIONS
Commissioner for Patents
Post Office Box 1450
Alexandria, VA 22313-1450

By hand: Customer Service Window
Mail Stop Petitions
Randolph Building
401 Dulany Street
Alexandria, VA 22314

By fax: (571) 273-8300
ATTN: Office of Petitions

Any questions concerning this matter may be directed to the undersigned at (571) 272-3230.

Shirene Willis Brantley

Shirene Willis Brantley
Senior Petitions Attorney
Office of Petitions

UNITED STATES PATENT AND TRADEMARK OFFICE

Commissioner for Patents
United States Patent and Trademark Office
P.O. Box 1450
Alexandria, VA 22313-1450
www.uspto.gov

GOODWIN PROCTER LLP
PATENT ADMINISTRATOR
EXCHANGE PLACE
BOSTON MA 02109-2881

MAILED

FEB 10 2009

OFFICE OF PETITIONS

In re Application of Dhanoa, et al. Application No. 11/075,565 Filed: March 8, 2005 Attorney Docket No. EPX-010CP2	DECISION ON PETITION UNDER 37 CFR 1.78(a)(6)

This is a decision on the renewed petition under 37 CFR 1.78(a)(6), filed January 8, 2009, to accept an unintentionally delayed claim under 35 U.S.C. § 119(e) for the benefit of priority to a prior-filed provisional application.

The petition is **GRANTED.**

A petition under 37 CFR 1.78(a)(6) is only applicable to those applications filed on or after November 29, 2000. Further, the petition is appropriate only after expiration of the period specified in 37 CFR 1.78(a)(5)(ii) and must be filed during the pendency of the nonprovisional application. In addition, the petition must be accompanied by:

(1) the reference required by 35 U.S.C. § 119(e) and 37 CFR 1.78(a)(5)(i) to the prior-filed application, unless previously submitted;
(2) the surcharge set forth in § 1.17(t); and
(3) a statement that the entire delay between the date the claim was due under 37 CFR 1.78(a)(5)(ii) and the date the claim was filed was unintentional. The Director may require additional information where there is a question whether the delay was unintentional.

Additionally, the instant nonprovisional application must be pending at the time of filing of the reference to the prior-filed provisional application as required by 37 CFR 1.78(a)(5)(ii). Further, a nonprovisional application claiming the benefit of the prior-filed provisional application must have been filed within twelve months of the filing date of the prior-filed provisional application.

All of the above requirements having been satisfied, the late claim for priority under 35 U.S.C. § 119(e) is accepted as being unintentionally delayed.

The granting of the petition to accept the delayed benefit claim to the prior-filed application under 37 CFR 1.78(a)(6) should not be construed as meaning that this application is entitled to the benefit of the filing date of the prior-filed application. In order for this application to be entitled to the benefit of the prior-filed application, all other requirements under 35 U.S.C. §119(e) and 37 CFR 1.78(a)(4) and (a)(5) must be met. Similarly, the fact that the corrected Filing Receipt accompanying this decision on petition includes the prior-filed application should not be construed as meaning that applicant is entitled to the claim for benefit of priority to the prior-filed application noted thereon. Accordingly, the examiner will, in due course, consider this benefit claim and determine whether the application is entitled to the benefit of the earlier filing date.

A corrected Filing Receipt, which includes the priority claim to the prior-filed provisional application, accompanies this decision on petition.

Any inquiries concerning this decision may be directed to the undersigned at (571) 272-3230. All other inquiries concerning either the examination procedures or status of the application should be directed to the Technology Center.

The application is being forwarded to Technology Center AU 1624 for consideration by the examiner of the claim under 35 U.S.C. §119(e) for the benefit of priority to the prior-filed provisional application.

Shirene Willis Brantley
Senior Petitions Attorney
Office of Petitions

ATTACHMENT: Corrected Filing Receipt

UNITED STATES PATENT AND TRADEMARK OFFICE

UNITED STATES DEPARTMENT OF COMMERCE
United States Patent and Trademark Office
Address: COMMISSIONER FOR PATENTS
P.O. Box 1450
Alexandria, Virginia 22313-1450
www.uspto.gov

APPLICATION NUMBER	FILING or 371(c) DATE	GRP ART UNIT	FIL FEE REC'D	ATTY.DOCKET.NO	TOT CLAIMS	IND CLAIMS
11/075,565	03/08/2005	1624	1090	EPX-010CP2	13	7

CONFIRMATION NO. 4113

CORRECTED FILING RECEIPT

51414
GOODWIN PROCTER LLP
PATENT ADMINISTRATOR
53 STATE STREET
EXCHANGE PLACE
BOSTON, MA 02109-2881

OC000000034357744

Date Mailed: 02/03/2009

Receipt is acknowledged of this non-provisional patent application. The application will be taken up for examination in due course. Applicant will be notified as to the results of the examination. Any correspondence concerning the application must include the following identification information: the U.S. APPLICATION NUMBER, FILING DATE, NAME OF APPLICANT, and TITLE OF INVENTION. Fees transmitted by check or draft are subject to collection. Please verify the accuracy of the data presented on this receipt. **If an error is noted on this Filing Receipt, please submit a written request for a Filing Receipt Correction. Please provide a copy of this Filing Receipt with the changes noted thereon. If you received a "Notice to File Missing Parts" for this application, please submit any corrections to this Filing Receipt with your reply to the Notice. When the USPTO processes the reply to the Notice, the USPTO will generate another Filing Receipt incorporating the requested corrections**

Applicant(s)

Dale S. Dhanoa, Wakefield, MA;
Oren Becker, Mevaseret Zion, ISRAEL;
Silvia Noiman, Herzliya, ISRAEL;
Sekar Reddy Alla, Burlington, MA;
Srinivasa Rao Cheruku, Woburn, MA;
Rosa E. Mele'ndez, Woburn, MA;
Anurag Sharadendu, Salem, NH;
Dongli Chen, Chestnut Hill, MA;
Yael Marantz, Kadima, ISRAEL;
Sharon Shacham, Alfey Menashe, ISRAEL;
Alexander Heifetz, Bnei-Brak, ISRAEL;
Boaz Inbal, Kfar Shmuel, ISRAEL;
Venkitasamy Kesavan, Woburn, MA;
Shay Bar-Haim, Netanya, ISRAEL;

Power of Attorney: The patent practitioners associated with Customer Number 051414

Domestic Priority data as claimed by applicant

This application is a CIP of 10/815,417 03/31/2004 PAT 7,030,240
and is a CIP of 10/947,995 09/23/2004
and said 10/815,417 03/31/2004
claims benefit of 60/458,831 03/31/2003

Foreign Applications

If Required, Foreign Filing License Granted: 03/31/2005

The country code and number of your priority application, to be used for filing abroad under the Paris Convention, is **US 11/075,565**

Projected Publication Date: Not Applicable

Non-Publication Request: No

Early Publication Request: No
**** SMALL ENTITY ****
Title

Piperidinylamino-thieno[2,3-D] pyrimidine compounds

Preliminary Class

514

PROTECTING YOUR INVENTION OUTSIDE THE UNITED STATES

Since the rights granted by a U.S. patent extend only throughout the territory of the United States and have no effect in a foreign country, an inventor who wishes patent protection in another country must apply for a patent in a specific country or in regional patent offices. Applicants may wish to consider the filing of an international application under the Patent Cooperation Treaty (PCT). An international (PCT) application generally has the same effect as a regular national patent application in each PCT-member country. The PCT process **simplifies** the filing of patent applications on the same invention in member countries, but **does not result** in a grant of "an international patent" and does not eliminate the need of applicants to file additional documents and fees in countries where patent protection is desired.

Almost every country has its own patent law, and a person desiring a patent in a particular country must make an application for patent in that country in accordance with its particular laws. Since the laws of many countries differ in various respects from the patent law of the United States, applicants are advised to seek guidance from specific foreign countries to ensure that patent rights are not lost prematurely.

Applicants also are advised that in the case of inventions made in the United States, the Director of the USPTO must issue a license before applicants can apply for a patent in a foreign country. The filing of a U.S. patent application serves as a request for a foreign filing license. The application's filing receipt contains further information and guidance as to the status of applicant's license for foreign filing.

Applicants may wish to consult the USPTO booklet, "General Information Concerning Patents" (specifically, the section entitled "Treaties and Foreign Patents") for more information on timeframes and deadlines for filing foreign patent applications. The guide is available either by contacting the USPTO Contact Center at 800-786-9199, or it can be viewed on the USPTO website at http://www.uspto.gov/web/offices/pac/doc/general/index.html.

For information on preventing theft of your intellectual property (patents, trademarks and copyrights), you may wish to consult the U.S. Government website, http://www.stopfakes.gov. Part of a Department of Commerce initiative, this website includes self-help "toolkits" giving innovators guidance on how to protect intellectual property in specific countries such as China, Korea and Mexico. For questions regarding patent enforcement issues, applicants may call the U.S. Government hotline at 1-866-999-HALT (1-866-999-4158).

LICENSE FOR FOREIGN FILING UNDER

Title 35, United States Code, Section 184

Title 37, Code of Federal Regulations, 5.11 & 5.15

GRANTED

The applicant has been granted a license under 35 U.S.C. 184, if the phrase "IF REQUIRED, FOREIGN FILING LICENSE GRANTED" followed by a date appears on this form. Such licenses are issued in all applications where the conditions for issuance of a license have been met, regardless of whether or not a license may be required as set forth in 37 CFR 5.15. The scope and limitations of this license are set forth in 37 CFR 5.15(a) unless an earlier license has been issued under 37 CFR 5.15(b). The license is subject to revocation upon written notification. The date indicated is the effective date of the license, unless an earlier license of similar scope has been granted under 37 CFR 5.13 or 5.14.

This license is to be retained by the licensee and may be used at any time on or after the effective date thereof unless it is revoked. This license is automatically transferred to any related applications(s) filed under 37 CFR 1.53(d). This license is not retroactive.

The grant of a license does not in any way lessen the responsibility of a licensee for the security of the subject matter as imposed by any Government contract or the provisions of existing laws relating to espionage and the national security or the export of technical data. Licensees should apprise themselves of current regulations especially with respect to certain countries, of other agencies, particularly the Office of Defense Trade Controls, Department of State (with respect to Arms, Munitions and Implements of War (22 CFR 121-128)); the Bureau of Industry and Security, Department of Commerce (15 CFR parts 730-774); the Office of Foreign AssetsControl, Department of Treasury (31 CFR Parts 500+) and the Department of Energy.

NOT GRANTED

No license under 35 U.S.C. 184 has been granted at this time, if the phrase "IF REQUIRED, FOREIGN FILING LICENSE GRANTED" DOES NOT appear on this form. Applicant may still petition for a license under 37 CFR 5.12, if a license is desired before the expiration of 6 months from the filing date of the application. If 6 months has lapsed from the filing date of this application and the licensee has not received any indication of a secrecy order under 35 U.S.C. 181, the licensee may foreign file the application pursuant to 37 CFR 5.15(b).

UNITED STATES PATENT AND TRADEMARK OFFICE

UNITED STATES DEPARTMENT OF COMMERCE
United States Patent and Trademark Office
Address: COMMISSIONER FOR PATENTS
P.O. Box 1450
Alexandria, Virginia 22313-1450
www.uspto.gov

GOODWIN PROCTER LLP
PATENT ADMINISTRATOR
53 STATE STREET
EXCHANGE PLACE
BOSTON, MA 02109-2881

Mail Date: 05/05/2010

Applicant	: Dale S. Dhanoa	: DECISION ON REQUEST FOR
Patent Number	: 7612078	: RECALCULATION of PATENT
Issue Date	: 11/03/2009	: TERM ADJUSTMENT IN VIEW
Application No	: 11/075,565	: OF WYETH AND NOTICE OF INTENT TO
Filed	: 03/08/2005	: ISSUE CERTIFICATE OF CORRECTION
		:

The Request for Recalculation is **GRANTED** to the extent indicated.

The patent term adjustment has been determined to be **675** days. The USPTO will *sua sponte* issue a certificate of correction reflecting the amount of PTA days determined by the recalculation.

Prior to the issuance of the certificate of correction, the USPTO will afford patentee an opportunity to be heard and request reconsideration. Accordingly, patentee has **one month or thirty (30) days**, whichever is longer, to file a request for reconsideration of this patent term adjustment calculation. See 35 U.S.C. 154(b)(3)(B)(ii) and 37 CFR 1.322(a)(4). No extensions of time will be granted under 37 CFR 1.136.

Patentee should use document code PET.OP if electronically filing a request for reconsideration of this patent term adjustment calculation. The patentee must also include the information required by 37 CFR 1.705(b)(2) and the fee required by 37 CFR 1.18(e). If patentee does not file a timely request for reconsideration of this patent term adjustment calculation including the information required by 37 CFR 1.705(b)(2) and the fee required by 37 CFR 1.18(e), the USPTO will issue a certificate of correction reflecting the PTA determination noted above.

Patentee should be aware that in order to preserve the right to review in the United States District Court for the District of Columbia of the USPTO patent term adjustment determination, patentee must ensure that he or she also take the steps required under 35 U.S.C. 154(b)(4)(A) in a timely manner. Nothing in the request for recalculation should be construed as providing an alternative time frame for commencing a civil action under 35 U.S.C. 154(b)(4)(A).

Any questions concerning this decision should be directed to the Office of Patent Legal Administration at 571-272-7702.

UNITED STATES PATENT AND TRADEMARK OFFICE

Commissioner for Patents
United States Patent and Trademark Office
P.O. Box 1450
Alexandria, VA 22313-1450
www.uspto.gov

MAILED

NOV 29 2005

DIRECTOR'S OFFICE
TECHNOLOGY CENTER 2600

WOND, LLC (2 "V")
7394 WILDFLOWER WAY
CUPERTINO CA 95014

In re Application of
Prasanna Ganesan, et al.
Application No. 11/075,573
Filed: March 9, 2005
For: **CONTINUOUS DATA FEEDING IN A DISTRIBUTED ENVIRONMENT**

DECISION ON PETITION
TO MAKE SPECIAL

This is a decision on the petition filed October 31, 2005, under Manual of Patent Examination Procedure §708.02, VIII requesting accelerated examination.

The petition under Manual of Patent Examination Procedure §708.02, VIII, must:
(1) be filed prior to receiving any examination by the examiner,
(2) be accompanied by the required fee- $130,
(3) the claims should be directed to a single invention (if it is determined that the claims pertain to more than one invention, then applicant will have to make an election without traverse or forfeit accelerated examination status),
(4) state that a pre-examination search was made, and fully discuss the search method employed, such as classes and subclasses searched, publications, Chemical abstracts, patents, etc. A search made by a foreign patent office satisfies this requirement,
(5) be accompanied by a copy of each of the references most closely related to the subject matter encompassed by the claims if said references are not already of record,
(6) fully discuss the references, pointing out with the particularity required by 37 C.F.R. §1.111 (b) and (c), how the claimed subject matter is patentable over the references.

The petitioner meets all the above-listed requirements. Accordingly, the petition is **GRANTED**.

The application will retain its special status throughout its entire prosecution, including any appeal to the Board of Patent Appeals and Interferences, subject only to diligent prosecution by the applicant. The application file is being forwarded to the examiner for appropriate action in due course.

Dwayne Bost
Special Program Examiner
Technology Center 2600
Communications

UNITED STATES PATENT AND TRADEMARK OFFICE

Commissioner for Patents
United States Patent and Trademark Office
P.O. Box 1450
Alexandria, VA 22313-1450
www.uspto.gov

INGRASSIA, FISHER & LORENZ, P.C.
7150 E. CAMELBACK ROAD
SUITE 325
SCOTTSDALE, AZ 85251

COPY MAILED

MAY 17 2007

OFFICE OF PETITIONS

In re Application of	:	
Jason Allen Janesky, et. al.	:	
Application No. 11/075,587	:	ON PETITION
Filed: March 9, 2005	:	
Attorney Docket No. CML00284CR D01	:	

This is a decision on the petition under 37 CFR 1.137(b), filed by facsimile transmission on February 13, 2007, to revive the above-identified application.

The application became abandoned for failure to timely respond to the Notice of Drawing Inconsistency with Specification mailed May 10, 2006. A Notice of Abandonment was mailed on August 22, 2006.

The petition satisfies the requirements of 37 CFR 1.137(b), in that, petitioner has supplied (1) the reply in the form of an amendment to remove Figure 16; (2) the petition fee of $1,500; and (3) an adequate statement of unintentional delay. Therefore, the petition is **GRANTED**.

The Office acknowledges receipt of $1,400 for payment of the issue fee and $300 for payment of the publication fee submitted on June 21, 2006.

This application file is being referred to the Office of Publications for further processing into a patent.

Telephone inquiries concerning this decision should be directed to the undersigned at (571) 272-3226.

Andrea Smith
Petitions Examiner
Office of Petitions

UNITED STATES PATENT AND TRADEMARK OFFICE

Commissioner for Patents
United States Patent and Trademark Office
P.O. Box 1450
Alexandria, VA 22313-1450
www.uspto.gov

GREENBERG TRAURIG
3773 HOWARD HUGHES PARKWAY
SUITE 500 NORTH
LAS VEGAS, NV 89109

COPY MAILED

NOV 30 2006

OFFICE OF PETITIONS

In re Application of	:	
Walter J. Spawr	:	
Application No. 11/075,594	:	DECISION ON PETITION
Filed: March 8, 2005	:	TO MAKE SPECIAL UNDER
Attorney Docket No. 7429.00001	:	37 CFR 1.102(c)(1)
	:	

This is a decision on the petition under 37 CFR 1.102(c)(1), filed June 26, 2006, to make the above-identified application special based on applicant's age as set forth in M.P.E.P. § 708.02, Section IV.

The petition is **GRANTED**.

A grantable petition to make an application special under 37 CFR 1.102(c)(1) and MPEP § 708.02, Section IV: Applicant's Age must be accompanied by evidence showing that at least one of the applicants is 65 years of age, or more, such as a birth certificate or a statement by applicant. No fee is required

The instant petition includes a statement from Inventor Walter J. Spawr stating that he is over 65 years of age. Accordingly, the above-identified application has been accorded "special" status.

Telephone inquiries concerning this decision should be directed to Irvin Dingle at 571-272-3210.

All other inquiries concerning either the examination or status of the application should be directed to the Technology Center.

The application is being forwarded to the Technology Center Art Unit 2878 for action on the merits commensurate with this decision.

Irvin Dingle
Petitions Examiner
Office of Petitions

UNITED STATES PATENT AND TRADEMARK OFFICE

UNITED STATES DEPARTMENT OF COMMERCE
United States Patent and Trademark Office
Address: COMMISSIONER FOR PATENTS
P.O. Box 1450
Alexandria, Virginia 22313-1450
www.uspto.gov

APPLICATION NO.	FILING DATE	FIRST NAMED INVENTOR	ATTORNEY DOCKET NO.	CONFIRMATION NO.
11/075,640	03/08/2005	Stephen Manley	5693P085	1257

48102 7590 09/15/2008
NETWORK APPLIANCE/BSTZ
BLAKELY SOKOLOFF TAYLOR & ZAFMAN LLP
1279 OAKMEAD PARKWAY
SUNNYVALE, CA 94085-4040

EXAMINER
MCCARTHY, CHRISTOPHER S

ART UNIT	PAPER NUMBER
2113	

MAIL DATE	DELIVERY MODE
09/15/2008	PAPER

Please find below and/or attached an Office communication concerning this application or proceeding.

The time period for reply, if any, is set in the attached communication.

UNITED STATES PATENT AND TRADEMARK OFFICE

Commissioner for Patents
United States Patent and Trademark Office
P.O. Box 1450
Alexandria, VA 22313-1450
www.uspto.gov

MAILED

SEP 12 2008

TECHNOLOGY CENTER 2100

NETWORK APPLIANCE/BSTZ
BLAKELY SOKOLOFF TAYLOR & ZAFMAN, LLP
1279 OAKMEAD PARKWAY
SUNNYVALE, CA 94085-4040

In re Application of:
MANLEY et al
Appl. No.: 11/075,640
Filed: March 8, 2005
For: METHOD AND SYSTEM FOR RE-SYNCHRONIZING AN ASYNCHRONOUS MIRROR WITHOUT DATA LOSS

DECISION ON PETITION UNDER 37 CFR § 1.59

This is a decision on the petition under 37 CFR § 1.59(b), filed on 21 August 2008, to expunge an Amendment, Remarks and Claims submitted on 24 March 2008. The petition for immediate consideration requested under 37 CFR § 1.182 filed on 29 August 2008, is hereby acknowledged.

The petition is **GRANTED**.

Petitioner requests that the Amendment, Remarks and Claims (total of 11 pages) filed on 24 March 2008 be expunged from the record. Petitioner states that the Amendment, Remarks and Claims were submitted unintentionally to the central fax number and that they were intended to have been submitted informally for purposes of discussion only in the instant Application. Note, the petition fee set forth in 37 CFR § 1.17(g) has been paid.

The expunged materials have been closed from public view and will not be returned to applicant.

Any inquiry concerning this decision should be directed to the undersigned whose telephone number is (571) 272-3595.

Brian Johnson
SPRE/Quality Assurance Specialist
Technology Center 2100
Computer Architecture, Software, and Information Security

UNITED STATES PATENT AND TRADEMARK OFFICE

Commissioner for Patents
United States Patent and Trademark Office
P.O. Box 1450
Alexandria, VA 22313-1450
www.uspto.gov

MINTZ, LEVIN, COHN,
FERRIS, GLOVSKY
AND POPEO, P.C.
ONE FINANCIAL CENTER
BOSTON MA 02111

COPY MAILED

MAR 2 4 2008

In re Application of	:	
Kuliopulos	:	
Application No. 11/075,645	:	DECISION
Filed: 7 March, 2005	:	
Attorney Docket No. 18475-034 DIV	:	

This is a decision on the petition filed on 24 January, 2008, and considered as a request to withdraw the holding of abandonment under 37 C.F.R. §1.181.

The petition as considered under 37 C.F.R. §1.181 is **GRANTED**.

BACKGROUND

The record reflects that:

- Petitioner failed to reply timely and properly to the Requirement for Restriction mailed on 28 June, 2007, with reply due absent extension of time on or before 28 July, 2007;
- the application went abandoned after midnight 23 April, 2007;
- the Office mailed the Notice of Abandonment 8 January, 2008;
- on 24 January, 2008, Petitioner filed the instant petition with, *inter alia*, an averment that the a reply had been timely filed via U.S. Postal Service Express Mail (Label No. EV 857 247 312 US) to Office action in question, and in support of that averment Petitioner provided a copy of the USPS Express Mail label and of a date-stamped ("JUL 16 2007") receipt card and a copy of the reply in the form of an Election averred to have been filed,

consistent with the guidance at the Commentary at MPEP §711.03(c)(I)(A) and (B) regarding non-receipt and timely filing, respectively.

The availability of applications and application papers online to applicants/practitioners who diligently associate their Customer Number with the respective application(s) now provides an applicant/practitioner on-demand information as to events/transactions in an application. Thus, now if one wishes to know the progress in and/or status of an application or the accuracy of the data therein, one need only look at the file online.

Out of an abundance of caution, Petitioners always are reminded that the filing of a petition under 37 C.F.R. §1.181 does not toll any periods that may be running any action by the Office and a petition seeking relief under the regulation must be filed within two (2) months of the act complained of (see: 37 C.F.R. §1.181(f)), and that those registered to practice and all others who make representations before the Office are reminded to inquire into the underlying facts of representations made to the Office and support averments with the appropriate documentation– since all owe to the Office the continuing duty to disclose.[2]

STATUTES, REGULATIONS AND ANALYSIS

Congress has authorized the Commissioner to "revive an application if the delay is shown to the satisfaction of the Commissioner to have been "unavoidable." 35 U.S.C. §133 (1994).[3]

The regulations at 37 C.F.R. §1.137(a) and (b) set forth the requirements for a petitioner to revive a previously unavoidably or unintentionally, respectively, abandoned application under this congressional grant of authority.

The language of 35 U.S.C. §133 and 37 C.F.R. §1.137(a) is clear, unambiguous, and without qualification: the delay in tendering the reply to the outstanding Office action, as well as filing the first petition seeking revival, must have been unavoidable for the reply now to be accepted on petition.[4]

Delays in responding properly raise the question whether delays are unavoidable.[4] Where there is a question whether the delay was unavoidable, Petitioners must meet the burden of

---

[2] See supplement of 17 June, 1999. The Patent and Trademark Office is relying on petitioner's duty of candor and good faith and accepting a statement made by Petitioner. See Changes to Patent Practice and Procedure, 62 Fed. Reg. at 53160 and 53178, 1203 Off. Gaz. Pat. Office at 88 and 103 (responses to comments 64 and 109)(applicant obligated under 37 C.F.R. §10.18 to inquire into the underlying facts and circumstances when providing statements to the Patent and Trademark Office).

[3] 35 U.S.C. §133 provides:
35 U.S.C. §133 Time for prosecuting application.
Upon failure of the applicant to prosecute the application within six months after any action therein, of which notice has been given or mailed to the applicant, or within such shorter time, not less than thirty days, as fixed by the Commissioner in such action, the application shall be regarded as abandoned by the parties thereto, unless it be shown to the satisfaction of the Commissioner that such delay was unavoidable.

establishing that the delay was unavoidable within the meaning of 35 U.S.C. §133 and 37 C.F.R. §1.137(a).[5]

And the Petitioner must be diligent in attending to the matter.[6] Failure to do so does not constitute the care required under Pratt, and so cannot satisfy the test for diligence and due care.

(By contrast, unintentional delays are those that do not satisfy the very strict statutory and regulatory requirements of unavoidable delay, and also, by definition, are not intentional.[7]))

Allegations as to the Request to
Withdraw the Holding of Abandonment

The courts have determined the construct for properly supporting a petition seeking withdrawal of a holding of abandonment.[8] (See: the commentary at MPEP §711.03(c)(I)(A) and (B) , as to non-receipt and timely filing, respectively.)

And the regulation requires that relief be sought within two (2) months of the act complained of.

Petitioner appears to have satisfied the burdens herein.

CONCLUSION

Petitioner appears to have satisfied the burdens herein, and the petition as considered under 37 C.F.R. §1.181 is **granted**, and the 8 January, 2008, Notice of Abandonment is **vacated**.

The instant application is released to Technology Center AU 1647 further processing in due course.

Petitioner may find it beneficial to view Private PAIR within a fortnight of the instant decision to ensure that the revival has been acknowledged by the Technology Center AU in response to this

---

4 See: *Changes to Patent Practice and Procedure*; *Final Rule Notice*, 62 *Fed. Reg.* at 53158-59 (October 10, 1997), 1203 *Off. Gaz. Pat. Office* at 86-87 (October 21, 1997).

5 See: In re Application of G, 11 USPQ2d 1378, 1380 (Comm'r Pats. 1989).

6 See: Diligence in Filing Petitions to Revive and Petitions to Withdraw the Holding of Abandonment, 1124 Off. Gaz. Pat. Office 33 (March 19, 1991). It was and is Petitioner's burden to exercise diligence in seeking either to have the holding of abandonment withdrawn or the application revived. See 1124 Off. Gaz. Pat. Office supra.

7 Therefore, by example, an unintentional delay in the reply might occur if the reply and transmittal form are to be prepared for shipment by the US Postal Service, but other pressing matters distract one's attention and the mail is not timely deposited for shipment.

8 See: Delgar v. Schulyer, 172 USPQ 513 (D.D.C. 1971).

decision—and it is noted that all inquiries with regard to any failure of that change in status should be directed to the Technology Center AU where that change of status must be effected.

While telephone inquiries regarding this decision may be directed to the undersigned at (571) 272-3214, it is noted that all practice before the Office is in writing (see: 37 C.F.R. §1.2[9]) and the proper authority for action on any matter in this regard are the statutes (35 U.S.C.), regulations (37 C.F.R.) and the commentary on policy (MPEP). Therefore, no telephone discussion may be controlling or considered authority for Petitioner's action(s).

John J. Gillon, Jr.
Senior Attorney
Office of Petitions

---

[9] The regulations at 37 C.F.R. §1.2 provide:

§1.2 Business to be transacted in writing.

All business with the Patent and Trademark Office should be transacted in writing. The personal attendance of applicants or their attorneys or agents at the Patent and Trademark Office is unnecessary. The action of the Patent and Trademark Office will be based exclusively on the written record in the Office. No attention will be paid to any alleged oral promise, stipulation, or understanding in relation to which there is disagreement or doubt.

PATENT

IN THE UNITED STATES PATENT AND TRADEMARK OFFICE

In re the Patent Application of:	Group Art Unit: To Be Assigned 1711
Applicant: Sally W. RAMSEY	Examiner: To Be Assigned McClendon
Serial No.: To Be Assigned 11/075647	WSGR Reference No.: 31270-705.201
Filed: Herewith 3-8-05	
Title: *Environmentally Friendly Coating Compositions for Coating Metal Objects, Coated Objects Therefrom, and Methods, Processes And Assemblages for Coating Thereof*	Certificate of Mailing Under C.F.R. §1.8 I hereby certify that this correspondence and all marked attachments are being deposited by Express Mail, Express Mailing Label No.: EV 517725930 US on 08-Mar-05 addressed to: Commissioner for Patents, P.O. Box 1450, Alexandria, VA 22313-1450. By: Michael Boyd

Commissioner of Patents
P.O. Box 1450
Alexandria, VA 22313-1450

PETITION TO MAKE SPECIAL BECAUSE THE INVENTION WILL MATERIALLY ENHANCE THE QUALITY OF THE ENVIRONMENT37 C.F.R. §1.102(c), MPEP 708.02 V)

Sir:

Applicants hereby petition to make this application special because the disclosed invention materially enhances the quality of the environment by reducing air, water and soil pollution, thereby improving air, water and soil quality.

No fee is required with this petition, in accordance with 37 CFR 1.102(c).

2615261_1.DOC

PETITION GRANTED

William Krynski,
Special Program Examiner
Technology Center 1700
MAY 25 2006

UNITED STATES PATENT AND TRADEMARK OFFICE

Commissioner for Patents
United States Patent and Trademark Office
P.O. Box 1450
Alexandria, VA 22313-1450
www.uspto.gov
DIW Feb-06

MINTZ, LEVIN, COHN, FERRIS, GLOVSKY
AND POPEO, P.C.
ONE FINANCIAL CENTER
BOSTON MA 02111

COPY MAILED

FEB 07 2006

OFFICE OF PETITIONS

In re Application of	:
Diener, Ferguson, Hamaguchi,	: DECISION ACCORDING STATUS
Keene, Lagassse, Sawhney, and	: UNDER 37 CFR 1.47(a)
Thompson	:
Application No. 11/075,649	:
Filed: 7 March, 2005	:
Atty Docket No. 23239-578	:
	:

This is in response to the petition under 37 CFR 1.47(a) filed on 11 January, 2006.

The petition is **GRANTED**.

Petitioners have shown that the non-signing inventor, Pooja Sawhney, has refused to review the sign the declaration after having been sent a copy of the application. Specifically, petitioners have shown that a copy of the application was sent to joint inventor Sawhney, but that the non-signing inventor has failed to sign and return the declaration naming him as a joint inventor along with John L. Diener, Alicia Ferguson, Nobuko Hamaguchi, Sara Chesworth Keene, H.A. Daniel Lagasse, and Kristin Thompson.

The above-identified application and papers have been reviewed and found in compliance with 37 CFR 1.47(a). This application is hereby accorded Rule 1.47(a) status.

As provided in Rule 1.47(c), this Office will forward notice of this application's filing to the non-signing inventor at the address given in the Declaration. Notice of the filing of this application will also be published in the *Official Gazette*.

The application is being referred to the Office of Initial Patent Examination for further processing.

Telephone inquiries related to this decision should be directed to the undersigned at 571-272-3231.

Douglas I. Wood
Senior Petitions Attorney
Office of Petitions

UNITED STATES PATENT AND TRADEMARK OFFICE

Commissioner for Patents
United States Patent and Trademark Office
P.O. Box 1450
Alexandria, VA 22313-1450
www.uspto.gov
DIW Feb-06

Pooja Sawhney
276 Massachusetts Avenue, Apt. 511
Arlington MA 02474

COPY MAILED

FEB 07 2006

OFFICE OF PETITIONS

In re Application of
Diener et al.
Application No. 11/075,649
Filed: 7 March, 2005
For: APTAMERS TO THE HUMAN IL-12 CYTOKINE FAMILY AND THEIR USE AS AUTOIMMUNE DISEASE THERAPEUTICS

Dear Dr. Sawhney:

You are named as a joint inventor in the above identified United States patent application, filed under the provisions of 35 U.S.C. 116 (United States Code), and 37 CFR 1.47(a), Rules of Practice in Patent Cases. Should a patent be granted on the application you will be designated therein as a joint inventor.

As a named inventor you are entitled to inspect any paper in the file wrapper of the application, order copies of all or any part thereof (at a prepaid cost per 37 CFR 1.19) or make your position of record in the application. Alternatively, you may arrange to do any of the preceding through a registered patent attorney or agent presenting written authorization from you. If you care to join the application, counsel of record (see below) would presumably assist you. Joining in the application would entail the filing of an appropriate oath or declaration by you pursuant to 37 CFR 1.63.

Telephone inquiries regarding this communication should be directed to the undersigned at 571/272-3231. Requests for information regarding your application should be directed to the File Information Unit at 703/308-2733. Information regarding how to pay for and order a copy of the application, or a specific paper in the application, should be directed to Certification Division at 571/272-3150 or 1-800-972-6382 (outside the Washington D.C. area).

D Wood

Douglas I. Wood
Senior Petitions Attorney
Office of Petitions

MINTZ, LEVIN, COHN, FERRIS, GLOVSKY
AND POPEO, P.C.
ONE FINANCIAL CENTER
BOSTON MA 02111

UNITED STATES PATENT AND TRADEMARK OFFICE

Commissioner for Patents
United States Patent and Trademark Office
P.O. Box 1450
Alexandria, VA 22313-1450
www.uspto.gov

MCCARTER & ENGLISH, LLP
FOUR GATEWAY CENTER
100 MULBERRY STREET
NEWARK NJ 07102

COPY MAILED

SEP 1 2 2008

OFFICE OF PETITIONS

In re Application of	:	
Lotien Richard Huang et al	:	
Application No. 11/075,682	:	DECISION GRANTING PETITION
Filed: March 9, 2005	:	UNDER 37 CFR 1.313(c)(2)
Attorney Docket No. 99885/00003-4	:	

This is a decision on the petition under 37 CFR 1.313(c)(2), filed September 11, 2008, to withdraw the above-identified application from issue after payment of the issue fee.

The petition is **GRANTED**.

The above-identified application is withdrawn from issue for consideration of a submission under 37 CFR 1.114 (request for continued examination). *See* 37 CFR 1.313(c)(2).

Petitioner is advised that the issue fee paid on June 20, 2008 cannot be refunded. If, however, this application is again allowed, petitioner may request that it be applied towards the issue fee required by the new Notice of Allowance.[1]

Telephone inquiries should be directed to the undersigned at (571) 272-3208.

This application is being referred to Technology Center AU 1797 for processing of the request for continued examination under 37 CFR 1.114 and for consideration of the concurrently filed IDS.

Karen Creasy

Karen Creasy
Petitions Examiner
Office of Petitions

---

[1] *The request to apply the issue fee to the new Notice may be satisfied by completing and returning the new Part B – Fee(s) Transmittal Form (along with any balance due at the time of submission). Petitioner is advised that the Issue Fee Transmittal Form must be completed and timely submitted to avoid abandonment of the application.*

UNITED STATES PATENT AND TRADEMARK OFFICE

Commissioner for Patents
United States Patent and Trademark Office
P.O. Box 1450
Alexandria, VA 22313-1450
www.uspto.gov

MAILED FROM DIRECTORS OFFICE
AUG 24 2006
TECHNOLOGY CENTER 2800

Posz Law Group, PLC
12040 South Lakes Drive, Suite 101
Reston, VA 20191

In re U.S. Patent Application of	:	**DECISION ON REQUEST TO**
Hirofumi HIGUCHI	:	**PARTICIPATE IN PATENT**
Application No.: 11/075,708	:	**PROSECUTION HIGHWAY**
Filed: March 10, 2005	:	**PILOT PROGRAM AND PETITION**
Attorney Docket No. 01-814	:	**TO MAKE SPECIAL UNDER**
	:	**37 CFR 1.102(d)**

For: ELECTROSTATICALLY OSCILLATED DEVICE

This is a decision on the request to participate in the Patent Prosecution Highway (PPH) pilot program and the petition under 37 CFR 1.102(d), filed July 11, 2006, to make the above-identified application special.

The request and petition are **GRANTED**.

A grantable request to participate in the PPH pilot program and petition to make special require:

(1) The U.S. application must validly claim priority under 35 U.S.C. 119(a) to one or more applications filed in the JPO;
(2) Applicant must submit a copy of the allowable/patentable claim(s) from the JPO application(s) along with an English translation thereof and a statement that the English translation is accurate;
(3) All the claims in the U.S. application must sufficiently correspond or be amended to sufficiently correspond to the allowable/patentable claim(s) in the JPO application(s);
(4) Examination of the U.S. application has not begun;
(5) Applicant must submit a copy of all the office actions from each of the JPO application(s) containing the allowable/patentable claim(s) along with an English translation thereof and a statement that the English translation is accurate;
(6) Applicant must submit an IDS listing the documents cited by the JPO examiner in the JPO office action along with copies of documents except U.S. patents or U.S. patent application publications; and
(7) The required petition fee under 37 CFR 1.17(h).

The request to participate in the PPH pilot program and petition comply with the above requirements. Accordingly, the above-identified application has been accorded "special" status.

Telephone inquiries concerning this decision should be directed to Christine Oda at 571-272-1602.

All other inquiries concerning the examination or status of the application is accessible in the PAIR system at http://www.uspto.gov/ebc/index.html.

The application is being forwarded to the examiner for action on the merits commensurate with this decision.

C. Oda

Christine Oda
TC 2800
TQAS

UNITED STATES PATENT AND TRADEMARK OFFICE

UNITED STATES DEPARTMENT OF COMMERCE
United States Patent and Trademark Office
Address: COMMISSIONER FOR PATENTS
P.O. Box 1450
Alexandria, Virginia 22313-1450
www.uspto.gov

APPLICATION NO.	FILING DATE	FIRST NAMED INVENTOR	ATTORNEY DOCKET NO.	CONFIRMATION NO.
11/075,711	03/10/2005	Osamu Yamamori	267242US90	1391

7590 02/24/2009
OBLON, SPIVAK, MCCLELLAND MAIER & NEUSTADT, P.C.
1940 DUKE STREET
ALEXANDRIA, VA 22314

EXAMINER
KURIEN, CHRISTEN A

ART UNIT	PAPER NUMBER
2427	

NOTIFICATION DATE	DELIVERY MODE
02/24/2009	ELECTRONIC

DECISION GRANTING PETITION UNDER 37 CFR 1.138(d)

The declaration of express abandonment is recognized

This is in response to the petition under 37 CFR 1.138(d), requesting for a refund of any previously paid search fee and excess claims fee in the above-identified application.

The petition is granted.

The express abandonment is recognized. Any previously paid search fee and excess claims fee are hereby refunded.

Telephone inquiries should be directed to the Office of Data Management at (571) 272-4200.

Betty Powell

Patent Publication Branch
Office of Data Management

```
Adjustment date: 02/23/2009  BPOWELL
03/14/2005 HMARZI1  00000063 11075711
02 FC:1111                        -500.00 OP
04 FC:1201                        -200.00 OP
```

```
Refund Ref:
02/23/2009                0030066942
-----------------------------------------

Credit Card Refund Total:      $500.00

Am Exp..: XXXXXXXXXXX1002
```


FORM PET651G (Rev. 08/07)

Adjustment date: 02/23/2009 BPOWELL
03/14/2005 HMARZI1 00000063 11075711
02 FC:1111 -500.00 OP
04 FC:1201 -200.00 OP

UNITED STATES PATENT AND TRADEMARK OFFICE

Commissioner for Patents
United States Patent and Trademark Office
P.O. Box 1450
Alexandria, VA 22313-1450
www.uspto.gov

MILLER THOMPSON, LLP
Scotia Plaza
40 King Street West, Suite 5800
TORONTO ON M5H 3S1
CANADA

COPY MAILED

DEC 19 2007

OFFICE OF PETITIONS

In re Application of	:	
Loveridge, et al.	:	
Application No. 11/075,716	:	DECISION ON PETITION
Filed: March 10, 2005	:	
Attorney Docket No. 058817-0002	:	

This is a decision on the petition under 37 CFR 1.182, filed, July 23, 2007 (certificate of mailing date July 19, 2007), to permit University of Deleware, a partial assignee of the above-identified application, to control prosecution of the above-identified application.

The petition is **DISMISSED**.

Any request for reconsideration should be submitted within two (2) months of the mail date of this decision.

Petitioner explains that on August 5, 2003, the University of Delaware and Tournament Sports entered into an exclusive patent license agreement pursuant to which Tournament Sports would provide funding for the improvement of the invention associated with this application. Two University of Delaware employees and one Tournament Sports employee developed the invention.

Office records show that there are three joint inventors listed in this application's declaration – Malvin Loveridge, Dustin Bruening, and James Richards. Dustin Bruening and James Richards have assigned their rights in the application to University of Delaware, as evidenced by the assignment recorded with the Office on July 3, 2007. Petitioner asserts that Malvin Loveridge has assigned his rights in the invention to Tournament Sports. However, no assignment evidencing this fact has been filed in the Office.

The three joint inventors signed a declaration requesting that all correspondence be mailed to Customer Number 33797, which is the address for Miller Thompson, LLP, Tournament Sports' patent counsel.

On April 3, 2007, Kim Bauer, the President of Tournament Sports, sent University of Delaware a letter which stated that Tournament Sports informed a Ms. Graham to cease all work related to the patent applications, until such time as it was commercially viable.

Petitioner requests that it be permitted to control prosecution to protect its interests in the application.

The following is an excerpt from 37 CFR 3.71. Prosecution by assignee (in pertinent part):

(a) Patents — conducting of prosecution. One or more assignees as defined in paragraph (b) of this section may, after becoming of record pursuant to paragraph (c) of this section, conduct prosecution of a national patent application or a reexamination proceeding to the exclusion of either the inventive entity, or the assignee(s) previously entitled to conduct prosecution.

(b) Patents — assignee(s) who can prosecute. The assignee(s) who may conduct either the prosecution of a national application for patent or a reexamination proceeding are:

> (1) A single assignee . An assignee of the entire right, title and interest in the application or patent being reexamined who is of record, or
>
> (2) Partial assignee(s) together or with inventor(s) . All partial assignees, or all partial assignees and inventors who have not assigned their right, title and interest in the application or patent being reexamined, who together own the entire right, title and interest in the application or patent being reexamined. A partial assignee is any assignee of record having less than the entire right, title and interest in the application or patent being reexamined.

The Office will not allow a partial assignee to control the prosecution of the application to the exclusion of the other partial assignee/inventor. The rules specifically provide that parties who together own the entire right, title and interest in the application may control prosecution. In this instance, there are purportedly two partial assignees. As stated in *In re* Scold, 195 USPQ 335, 335 (Comm'r Pat. 1976), "Under 37 CFR 1.32 only the assignee of record of the entire interest in an application for a patent is entitled to conduct the prosecution of the application to the exclusion of the inventor.... As long as the possibility exists that the invention will not be abandoned, an assignee of a part interest will not be permitted to prosecute an application to the exclusion of others. The Office will not become entangled in title disputes." No Office action has been mailed. No time periods are running in the application. One of the two assignees cannot exclude the other.

It is telling that the Office does grant a Rule 183 waiver petition giving dual representation rights that clearly states that henceforth, all parties must sign every incoming paper to the Office – including a petition to revive.

Petitioner should explore other options to protect its interests.

The application is being returned to Technology Center A.U. 3728 for examination in due course.

Further correspondence with respect to this matter should be addressed as follows:

By mail: Mail Stop PETITIONS
Commissioner for Patents
Post Office Box 1450
Alexandria, VA 22313-1450

By hand: Customer Service Window
Mail Stop Petitions
Randolph Building
401 Dulany Street
Alexandria, VA 22314

By fax: (571) 273-8300
ATTN: Office of Petitions

Any questions concerning this matter may be directed to the undersigned at (571) 272-3230.

Shirene Willis Brantley

Shirene Willis Brantley
Senior Petitions Attorney
Office of Petitions

CC: BASIL S. KRIKELIS
MCCARTER & ENGLISH, LLP
RENAISSANCE CENTRE
405 N. KING STREET, 8TH FLOOR
WILMINGTON DE 19801

UNITED STATES PATENT AND TRADEMARK OFFICE

UNITED STATES DEPARTMENT OF COMMERCE
United States Patent and Trademark Office
Address: COMMISSIONER FOR PATENTS
P.O. Box 1450
Alexandria, Virginia 22313-1450
www.uspto.gov

NIXON & VANDERHYE, PC
901 NORTH GLEBE ROAD, 11TH FLOOR
ARLINGTON, VA 22203

Mail Date: 04/21/2010

Applicant	: Tomoo Takatani	: DECISION ON REQUEST FOR
Patent Number	: 7583327	: RECALCULATION of PATENT
Issue Date	: 09/01/2009	: TERM ADJUSTMENT IN VIEW
Appliction No	: 11/075,738	: OF WYETH AND NOTICE OF INTENT TO
Filed	: 03/10/2005	: ISSUE CERTIFICATE OF CORRECTION
		:

The Request for Recalculation is **GRANTED** to the extent indicated.

The patent term adjustment has been determined to be **1210** days. The USPTO will *sua sponte* issue a certificate of correction reflecting the amount of PTA days determined by the recalculation.

Prior to the issuance of the certificate of correction, the USPTO will afford patentee an opportunity to be heard and request reconsideration. Accordingly, patentee has **one month or thirty (30) days**, whichever is longer, to file a request for reconsideration of this patent term adjustment calculation. See 35 U.S.C. 154(b)(3)(B)(ii) and 37 CFR 1.322(a)(4). No extensions of time will be granted under 37 CFR 1.136.

Patentee should use document code PET.OP if electronically filing a request for reconsideration of this patent term adjustment calculation. The patentee must also include the information required by 37 CFR 1.705(b)(2) and the fee required by 37 CFR 1.18(e). If patentee does not file a timely request for reconsideration of this patent term adjustment calculation including the information required by 37 CFR 1.705(b)(2) and the fee required by 37 CFR 1.18(e), the USPTO will issue a certificate of correction reflecting the PTA determination noted above.

Patentee should be aware that in order to preserve the right to review in the United States District Court for the District of Columbia of the USPTO patent term adjustment determination, patentee must ensure that he or she also take the steps required under 35 U.S.C. 154(b)(4)(A) in a timely manner. Nothing in the request for recalculation should be construed as providing an alternative time frame for commencing a civil action under 35 U.S.C. 154(b)(4)(A).

Any questions concerning this decision should be directed to the Office of Patent Legal Administration at 571-272-7702.

UNITED STATES PATENT AND TRADEMARK OFFICE

UNITED STATES DEPARTMENT OF COMMERCE
United States Patent and Trademark Office
Address: COMMISSIONER FOR PATENTS
P.O. Box 1450
Alexandria, Virginia 22313-1450
www.uspto.gov

APPLICATION NO.	FILING DATE	FIRST NAMED INVENTOR	ATTORNEY DOCKET NO.	CONFIRMATION NO.
11/075,753	03/10/2005	Hwa-Soon Lee	47739	4741

7590 01/26/2009
ROYLANCE, ABRAMS, BERDO & GOODMAN, L.L.P.
1300 19TH STREET, N.W.
SUITE 600
WASHINGTON,, DC 20036

EXAMINER
HUBER, JEREMIAH C

ART UNIT	PAPER NUMBER
2621	

MAIL DATE	DELIVERY MODE
01/26/2009	PAPER

DECISION GRANTING PETITION UNDER 37 CFR 1.138(d)

The declaration of express abandonment is recognized

This is in response to the petition under 37 CFR 1.138(d), requesting for a refund of any previously paid search fee and excess claims fee in the above-identified application.

The petition is granted.

The express abandonment is recognized. Any previously paid search fee and excess claims fee are hereby refunded.

Telephone inquiries should be directed to the Office of Data Management at (571) 272-4200.

Betty Powell

Patent Publication Branch
Office of Data Management

Adjustment date: 01/26/2009 BPOWELL
03/14/2005 HMARZI1 00000006 11075753
02 FC:1111 -500.00 OP

Repln. Ref: 01/26/2009 BPOWELL 0015393500
DA#:182220 Name/Number:11390342
FC: 9204 $500.00 CR

FORM PET651G (Rev. 08/07)

Repln. Ref: 01/26/2009 BPOWELL 0015414100
DA#:182220 Name/Number:11075753
FC: 9204 $500.00 CR

UNITED STATES PATENT AND TRADEMARK OFFICE

Commissioner for Patents
United States Patent and Trademark Office
P.O. Box 1450
Alexandria, VA 22313-1450
www.uspto.gov

DICKSTEIN SHAPIRO MORIN & OSHINSKY LLP
2101 L STREET, NW
WASHINGTON, DC 20037

COPY MAILED
JUL 0 3 2006
OFFICE OF PETITIONS

In re Application of	:	
Yanagita et al.	:	DECISION ON PETITION
Application No. 11/075,769	:	TO MAKE SPECIAL
Filed: March 10, 2005	:	37 CFR1.102(D)
Attorney Docket No. A8319.0068/P068	:	

This is a decision on the petition under 37 CFR 1.102(d), filed on July 28, 2006, to make the above-identified application special based on developing treatments and cures for HIV/AIDS or cancer as set forth in M.P.E.P. § 708.02, Section X.

The petition is **DISMISSED**.

A grantable petition to make an application special under 37 CFR 1.102(d) and MPEP § 708.02, Section X: Inventions Relating to HIV/AIDS or cancer, must be accompanied by (1) the petition fee under 37 CFR 1.17(h); and (2) a satisfactory statement explaining how the invention contributes to the diagnosis, treatment or prevention of HIV/AIDS or cancer.

The instant petition does not meet item (2). Neither the claims nor the specification of the instant application mention the phrases "HIV/AIDS" or "cancer." Nor is the invention focused on improvements for only those areas. Rather, the invention is directed towards improvements in spatial resolution in radiation detection modules. The invention is not, therefore, considered to be in the specific fields of HIV/AIDS or cancer. Although improvements in spatial resolution techniques may provide a benefit to diagnoses of many diseases, any relation to specific advances in the fields of HIV/AIDS and cancer is considered to be tangential rather than a direct or material result of the invention.

Further correspondence with respect to this matter should be addressed as follows:

By Mail: Mail Stop PETITION
Commissioner for Patents
P. O. Box 1450
Alexandria, VA 22313-1450

By hand: U. S. Patent and Trademark Office
Customer Service Window, Mail Stop Petitions
Randolph Building
401 Dulany Street
Alexandria, VA 22314

By FAX: (571) 273-8300

Telephone inquiries concerning this decision should be directed to Petitions Examiner Liana Chase at 571-272-3206. All other inquiries concerning either the examination or status of the application should be directed to the Technology Center.

This matter is being referred to the Technology Center Art Unit 2884 for action in its regular turn.

David Bucci
Petitions Examiner
Office of Petitions

SPE RESPONSE FOR CERTIFICATE OF CORRECTION

Paper No.: _____

DATE : 2/4/09

TO SPE OF : ART UNIT 2812

SUBJECT : Request for Certificate of Correction for Appl. No.: 11075770 Patent No.: 7446415 B2

Please respond to this request for a certificate of correction within 7 days.

FOR IFW FILES:

Please review the requested changes/corrections as shown in the **COCIN** document(s) in the IFW application image. No new matter should be introduced, nor should the scope or meaning of the claims be changed.

Please complete the response (see below) and forward the completed response to scanning using document code **COCX**.

FOR PAPER FILES:

Please review the requested changes/corrections as shown in the attached certificate of correction. Please complete this form (see below) and forward it with the file to:

Certificates of Correction Branch (CofC)
South Tower - 9A22
Palm Location 7580
[redacted]

LAMONTE NEWSOME
Certificates of Correction Branch
703-308-9390 ext. 112

Thank You For Your Assistance

The request for issuing the above-identified correction(s) is hereby:
Note your decision on the appropriate box.

- ☑ **Approved** — All changes apply.
- ☐ **Approved in Part** — Specify below which changes **do not** apply.
- ☐ **Denied** — State the reasons for denial below.

Comments: _____

CHARLES D. GARBER
SUPERVISORY PATENT EXAMINER
2/4/2009

U.S. DEPARTMENT OF COMMERCE Patent and Trademark Office

SPE RESPONSE FOR CERTIFICATE OF CORRECTION

Paper No.: _____

DATE : 04/28/09

TO SPE OF : ART UNIT 1791

SUBJECT : Request for Certificate of Correction for Appl. No.: 11075784 Patent No.: 7481884 B2

Please respond to this request for a certificate of correction within 7 days.

FOR IFW FILES:

Please review the requested changes/corrections as shown in the **COCIN** document(s) in the IFW application image. No new matter should be introduced, nor should the scope or meaning of the claims be changed.

Please complete the response (see below) and forward the completed response to scanning using document code **COCX**.

FOR PAPER FILES:

Please review the requested changes/corrections as shown in the attached certificate of correction. Please complete this form (see below) and forward it with the file to:

Certificates of Correction Branch (CofC)
South Tower - 9A22
Palm Location 7580
You can fax the Directors/SPE response to 571-270-9390

LAMONTE NEWSOME
Certificates of Correction Branch
703-308-9390 ext. 112

Thank You For Your Assistance

The request for issuing the above-identified correction(s) is hereby:
Note your decision on the appropriate box.

XApproved	All changes apply.
☐ **Approved in Part**	Specify below which changes **do not** apply.
☐ **Denied**	State the reasons for denial below.

Comments: _____

/Philip C Tucker/ 1791

SPE RESPONSE FOR CERTIFICATE OF CORRECTION

SPE	Art Unit

U.S. DEPARTMENT OF COMMERCE Patent and Trademark Office

UNITED STATES PATENT AND TRADEMARK OFFICE

Commissioner for Patents
United States Patent and Trademark Office
P.O. Box 1450
Alexandria, VA 22313-1450
www.uspto.gov

MALLINCKRODT INC.
675 MCDONNELL BOULEVARD
PO BOX 5840
ST. LOUIS, MO 63134

COPY MAILED

JUL 19 2005

OFFICE OF PETITIONS

In re Application of
Samuel Achilefu et al.
Application No. 11/075,792
Filed: March 9, 2005
Attorney Docket No. 1448.3US

: DECISION ACCORDING STATUS
: UNDER 37 CFR 1.47(a)

This is in response to the petition filed June 14, 2005 under 37 CFR 1.47(a).

The petition under 37 CFR 1.47(a) is **GRANTED**.

The above-identified application was filed on March 9, 2005, but without a signed declaration. Accordingly, on April 15, 2005, a "Notice To File Missing Parts of Application" was mailed, requiring *inter alia* a properly executed oath or declaration.

In response, the instant petition under 37 CFR 1.47(a), an oath or declaration executed by joint inventors Rajagopalan, Dorshow, Bugaj and Periasamy, late filing surcharge and petition fee were filed. The petition argues however that joint inventor Samuel Achilefu refuses to execute the oath or declaration and thus to cooperate with the filing of the instant application.

A grantable petition under 37 CFR 1.47(a) requires: (1) proof that the non-signing inventor cannot be reached or refuses to sign the oath or declaration after having been presented with the application papers (specification, claims and drawings); (2) an acceptable oath or declaration in compliance with 35 U.S.C. §§ 115 and 116; (3) the petition fee; and (4) a statement of the last known address of the non-signing inventor.

The petition bears proof that the application papers were sent to Mr. Achilefu at his last known address and that a second copy was couriered to him at his place of employment however, to date he has not returned an executed copy of the oath or declaration.

The above-identified application and papers have been reviewed and found in compliance with 37 CFR 1.47(a). In view thereof, this application is hereby accorded Rule 1.47(a) status.

Thus, as provided in Rule 1.47c, this Office will forward notice of this application's filing to the non-signing inventor at the address given in the petition. Notice of the filing of this application will also be published in the Official Gazette.

This matter is being referred to the Office of Initial Patent Examination for further pre-examination processing.

Telephone inquiries concerning this matter may be directed to the undersigned Petitions Attorney at (571) 272-3212.

Patricia Faison-Ball

Patricia Faison-Ball
Senior Petitions Attorney
Office of Petitions

UNITED STATES PATENT AND TRADEMARK OFFICE

Commissioner for Patents
United States Patent and Trademark Office
P.O. Box 1450
Alexandria, VA 22313-1450
www.uspto.gov

SAMULE ACHILEFU
10907 LEIGHTON COURT
ST. LOUIS, MO 63146

In re Application of
Samuel Achilefu et al.
Application No. 11/075,792
Filed: March 9, 2005
Title of Invention: RECEPTOR-AVID EXOGENOUS OPTICAL CONTRAST AND THERAPEUTIC AGENTS

COPY MAILED

JUL 19 2005

OFFICE OF PETITIONS

Dear Mr. Achilefu:

You are named as a joint inventor in the above identified United States patent application, filed under the provisions of 35 U.S.C. 116 (United States Code), and 37 CFR 1.47(a), Rules of Practice in Patent Cases. Should a patent be granted on the application you will be designated therein as a joint inventor.

As a named inventor you are entitled to inspect any paper in the file wrapper of the application, order copies of all or any part thereof (at a prepaid cost per 37 CFR 1.19) or make your position of record in the application. Alternatively, you may arrange to do any of the preceding through a registered patent attorney or agent presenting written authorization from you. If you care to join the application, counsel of record (see below) would presumably assist you. Joining in the application would entail the filing of an appropriate oath or declaration by you pursuant to 37 CFR 1.63.

Telephone inquiries regarding this communication should be directed to the undersigned Petitions Attorney at (571) 272-3212. Requests for information regarding your application should be directed to the File Information Unit at 703/308-2733. Information regarding how to pay for and order a copy of the application, or a specific paper in the application, should be directed to Certification Division at 703/308-9726 or 1-800-972-6382 (outside the Washington D.C. area).

Patricia Faison-Ball
Senior Petitions Attorney
Office of Petitions

cc:

MALLINCKRODT INC.
675 MCDONNELL BOULEVARD
PO BOX 5840
ST. LOUIS, MO 63134

UNITED STATES PATENT AND TRADEMARK OFFICE

Commissioner for Patents
United States Patent and Trademark Office
P.O. Box 1450
Alexandria, VA 22313-1450
www.uspto.gov

SCHWEGMAN, LUNDBERG, WOESSNER & KLUTH, P.A.
P.O. BOX 2938
MINNEAPOLIS MN 55402

COPY MAILED

AUG 0 1 2006

OFFICE OF PETITIONS

In re Application of	:	
James Barnett	:	
Application No. 11/075,793	:	DECISION ON PETITION
Filed: May 11, 2006	:	TO WITHDRAW
Attorney Docket No. 2046.090US1	:	FROM RECORD
	:	

This is a decision on the Request to Withdraw as attorney or agent of record under 37 C.F.R. § 1.36(b), filed March 24, 2006.

The request is **NOT APPROVED** as moot.

A review of the file record indicates that the power of attorney to the attorneys/agents associated with Customer Number 21186 have been revoked by the assignee of the patent application on May 11, 2006. Accordingly, the request to withdraw under 37 C.F.R. § 1.36(b) is moot.

All future communications from the Office will continue to be directed to the below-listed address until otherwise notified by applicant.

Telephone inquiries concerning this decision should be directed to Charles Smoot at 571-272-3299.

David Bucci
Petitions Examiner
Office of Petitions

cc: WELSH & KATZ, LTD
120 S RIVERSIDE PLAZA
22ND FLOOR
CHICAGO, IL 60606

UNITED STATES PATENT AND TRADEMARK OFFICE

UNITED STATES DEPARTMENT OF COMMERCE
United States Patent and Trademark Office
Address: COMMISSIONER FOR PATENTS
P.O. Box 1450
Alexandria, Virginia 22313-1450
www.uspto.gov

Husch Blackwell Sanders, LLP
Husch Blackwell Sanders LLP Welsh & Katz
120 S RIVERSIDE PLAZA
22ND FLOOR
CHICAGO, IL 60606

Mail Date: 04/22/2010

Applicant	: James Barnett	: DECISION ON REQUEST FOR
Patent Number	: 7634722	: RECALCULATION of PATENT
Issue Date	: 12/15/2009	: TERM ADJUSTMENT IN VIEW
Appliction No	: 11/075,793	: OF WYETH AND NOTICE OF INTENT TO
Filed	: 03/08/2005	: ISSUE CERTIFICATE OF CORRECTION
		:

The Request for Recalculation is **GRANTED** to the extent indicated.

The patent term adjustment has been determined to be **787** days. The USPTO will *sua sponte* issue a certificate of correction reflecting the amount of PTA days determined by the recalculation.

Prior to the issuance of the certificate of correction, the USPTO will afford patentee an opportunity to be heard and request reconsideration. Accordingly, patentee has **one month or thirty (30) days**, whichever is longer, to file a request for reconsideration of this patent term adjustment calculation. See 35 U.S.C. 154(b)(3)(B)(ii) and 37 CFR 1.322(a)(4). No extensions of time will be granted under 37 CFR 1.136.

Patentee should use document code PET.OP if electronically filing a request for reconsideration of this patent term adjustment calculation. The patentee must also include the information required by 37 CFR 1.705(b)(2) and the fee required by 37 CFR 1.18(e). If patentee does not file a timely request for reconsideration of this patent term adjustment calculation including the information required by 37 CFR 1.705(b)(2) and the fee required by 37 CFR 1.18(e), the USPTO will issue a certificate of correction reflecting the PTA determination noted above.

Patentee should be aware that in order to preserve the right to review in the United States District Court for the District of Columbia of the USPTO patent term adjustment determination, patentee must ensure that he or she also take the steps required under 35 U.S.C. 154(b)(4)(A) in a timely manner. Nothing in the request for recalculation should be construed as providing an alternative time frame for commencing a civil action under 35 U.S.C. 154(b)(4)(A).

Any questions concerning this decision should be directed to the Office of Patent Legal Administration at 571-272-7702.

UNITED STATES PATENT AND TRADEMARK OFFICE

Commissioner for Patents
United States Patent and Trademark Office
P.O. Box 1450
Alexandria, VA 22313-1450
www.uspto.gov

GENERAL ELECTRIC COMPANY
GE AVIATION
ONE NEUMANN WAY MD H17
CINCINNATI, OH 45215

COPY MAILED

SEP 03 2009

OFFICE OF PETITIONS

In re Application of
Matthew Bernard Buczek
Application No. 11/075,799
Filed: March 10, 2005
Attorney Docket No. 151439

DECISION ON PETITION

This is a decision on the petition under the unintentional provisions of 37 CFR 1.137(b), filed July 8, 2009, to revive the above-identified application.

This application became abandoned for failure to timely pay the issue and publication fees on or before July 6, 2009, as required by the Notice of Allowance and Fee(s) Due, mailed April 6, 2009. Accordingly, the date of abandonment of this application is July 7, 2009.

The petition satisfies the requirements of 37 CFR 1.137(b) in that petitioner has supplied (1) the reply in the form of payment of the issue fee of $1510 and the publication fee of $300, (2) the petition fee of $1620; and (3) a proper statement of unintentional delay.

In view of the above, the petition is **GRANTED**.

Telephone inquiries concerning this decision should be directed to undersigned at (571) 272-1642. All other inquiries concerning the examination or status of this application should be directed to the Office of Data Management at their hotline 571-272-4200.

This application is being referred to Office of Data Management for processing into a patent.

April M. Wise
Petitions Examiner
Office of Petitions

UNITED STATES PATENT AND TRADEMARK OFFICE

Commissioner for Patents
United States Patent and Trademark Office
P.O. Box 1450
Alexandria, VA 22313-1450
www.uspto.gov

KOLISCH HARTWEL PC
520 SW YAMHILL ST
SUITE 200
PORTLAND OR 97204

COPY MAILED

SEP 0 9 2005

OFFICE OF PETITIONS

In re Application of Mark L. Worthington Application No. 11/075,829 Filed: March 8, 2005 Attorney Docket No. DIR.301	: : : : :	DECISION ACCORDING STATUS UNDER 37 CFR 1.47(b)

This is in response to petition under 37 CFR 1.47(b), filed July 5, 2005.

The petition under 37 CFR 1.47(b) is **GRANTED**.

The above-identified application was filed on March 8, 2005, without an executed oath or declaration. Accordingly, on March 31, 2005, the Office mailed a "Notice to File Missing Parts of Nonprovisional Application - Filing Date Granted," requiring, *inter alia*, an executed oath or declaration and a surcharge for its late filing. This Notice set a two-month period for reply.

In reply, applicant filed the instant petition under 37 CFR 1.47(b) and paid both the petition fee and the surcharge for late filing of the declaration. To make timely this reply, applicant obtained a one month extension of time and included a Certificate of Mailing dated June 30, 2005. Accompanying the petition was a declaration signed by Peter E. Pifer, listing the name, citizenship, and residence of nonsigning inventor Mark L. Worthington.

A grantable petition under 37 CFR 1.47(b) requires: (1) proof that all of the inventors cannot be reached or refuse to sign the oath or declaration after having been presented with the application papers (specification, claims, drawings, oath or declaration); (2) an acceptable oath or declaration in compliance with 37 CFR 1.63; (3) a showing that such action is necessary to preserve the rights of the parties or to prevent irreparable damage; (4) the petition fee; (5) a statement of the last known address of the non-signing inventor; and (6) proof that the Rule 47(b) applicant has sufficient proprietary interest in the subject matter to justify the filing of the application.

On petition, Rule 47 applicant has included a copy from Worthington's attorney, stating that Worthington refused to sign the application papers.

The petition and the declaration have been reviewed and found to be in compliance with 37 CFR 1.47(b) and 37 CFR 1.63.

This application is hereby accorded Rule 1.47(b) status.

As provided in Rule 1.47(c), this Office will forward notice of this application's filing to the non-signing inventor at the last known address given in the petition. Notice of the filing of this application will also be published in the Official Gazette.

A petition under 37 CFR 1.47 requires a fee of $200. Petitioner only submitted $130. Accordingly, $70 has been charged to Deposit Account No. 11-1540, as authorized.

The application file is being forwarded to Group Art Unit 3732 for docketing and examination in due course.

Telephone inquiries regarding this decision should be directed to the undersigned at (571)272-3207.

Cliff Congo
Petitions Attorney
Office of Petitions

UNITED STATES PATENT AND TRADEMARK OFFICE

Commissioner for Patents
United States Patent and Trademark Office
P.O. Box 1450
Alexandria, VA 22313-1450
www.uspto.gov

MARK L WORTHINGTON
2563 CAL YOUNG RD
EUGENE OR 97401

COPY MAILED

SEP 0 9 2005

OFFICE OF PETITIONS

In re Application of :
Mark L. Worthington :
Application No. 11/075,829 :
Filed: March 8, 2005 : LETTER
Title: Flexible Dimension Crown Shells :
:

Dear Mr. Worthington:

You are named as the sole inventor in the above-identified United States patent application filed under the provisions of 35 USC 116 (United States Code) and 37 CFR 1.47(b), Rules of Practice in Patent Cases. Should a patent be granted on the application you will be designated therein as the sole inventor.

As the named inventor you are entitled to inspect any paper in the file wrapper of the application, order copies of all or any part thereof (at a prepaid cost per 37 CFR 1.19) or make your position of record in the application. Alternatively, you may arrange to do any of the preceding through a registered patent attorney or agent presenting written authorization from you. If you care to join the application, agent of record (see below) would presumably assist you. Joining in the application would entail the filing of an appropriate oath or declaration by you pursuant to 37 CFR 1.63.

Telephone inquiries regarding this communication should be directed to Petitions Attorney Cliff Congo at (571)272-3207. Requests for information regarding your application should be directed to the File Information Unit at (703) 308-2733. Information regarding how to pay for and order a copy of the application, or a specific paper in the application, should be directed to the Certification Division at (703) 308-9726 or 1-800-972-6382 (outside the Washington D.C. area).

Cliff Congo

Cliff Congo
Petitions Attorney
Office of Petitions

Peter D. Sabido
Kolish Hartwel PC
520 SW Yamhill St Ste 200
Portland, OR 97204
phone: 503-224-6655

UNITED STATES PATENT AND TRADEMARK OFFICE

Commissioner for Patents
United States Patent and Trademark Office
P.O. Box 1450
Alexandria, VA 22313-1450
www.uspto.gov

KOLISCH HARTWEL PC
520 SW YAMHILL ST
SUITE 200
PORTLAND OR 97204

COPY MAILED
MAR 05 2007
OFFICE OF PETITIONS

In re Application of Mark L. Worthington Application No. 11/075,829 Filed: March 8, 2005 Attorney Docket No. DIR.301	: : : : :	DECISION DISMISSING REQUESTS

This is in response to the "REQUEST TO RECONSIDER GRANT OF RULE 47 PETITION" and the "FURTHER INFORMATION REGARDING UNJUSTIFIED GRANT OF RULE 47 PETITION", filed January 20, 2006 and July 13, 2006, respectively.

The requests are **DISMISSED**.

The above-identified application was filed on March 8, 2005, without an executed oath or declaration. Accordingly, on March 31, 2005, the Office mailed a "Notice to File Missing Parts of Nonprovisional Application - Filing Date Granted," requiring, *inter alia*, an executed oath or declaration and a surcharge for its late filing. This Notice set a two-month period for reply.

In reply, applicant filed the instant petition under 37 CFR 1.47(b) and paid both the petition fee and the surcharge for late filing of the declaration. To make timely this reply, applicant obtained a one month extension of time and included a Certificate of Mailing dated June 30, 2005. Accompanying the petition was a declaration signed by Peter E. Pifer, listing the name, citizenship, and residence of nonsigning inventor Mark L. Worthington. The petition was granted in a decision mailed on September 9, 2005.

The ownership of the above-identified application is in dispute. The Patent and Trademark Office is not the forum for resolving disputes between assignees as to ownership rights. An assignment of the entire right, title, and interest in the invention has not been recorded. DirectCrown LLC has failed to establish that it is the assignee of the entire interest, but has established ownership interest sufficient to allow it to act as the Rule 47(b) applicant.

The nonsigning inventor may seek to declare an interference in accordance with MPEP 2300.

Future correspondence concerning this application will only be mailed to the above address of record.

The matter is being forwarded to Group Art Unit 3732 for examination in due course.

Telephone inquiries regarding this decision should be directed to the undersigned at (571)272-3207.

Cliff Congo
Petitions Attorney
Office of Petitions

cc: William D. Noonan M.D.
Klarquist Sparkman, LLP
One World Trade Center
Suite 1600
121 S.W. Salmon St
Portland, OR 97204

UNITED STATES PATENT AND TRADEMARK OFFICE

UNITED STATES DEPARTMENT OF COMMERCE
United States Patent and Trademark Office
Address: COMMISSIONER FOR PATENTS
P.O. Box 1450
Alexandria, Virginia 22313-1450
www.uspto.gov

MARGER JOHNSON & MCCOLLOM, P.C.
210 SW MORRISON STREET, SUITE 400
PORTLAND, OR 97204

Mail Date: 06/15/2010

Applicant	: Elliot St. James	: DECISION ON REQUEST FOR
Patent Number	: 7631389	: RECALCULATION of PATENT
Issue Date	: 12/15/2009	: TERM ADJUSTMENT IN VIEW
Application No	: 11/075,831	: OF WYETH AND NOTICE OF INTENT TO
Filed	: 03/08/2005	: ISSUE CERTIFICATE OF CORRECTION
		:

The Request for Recalculation is **GRANTED** to the extent indicated.

The patent term adjustment has been determined to be **1317** days. The USPTO will *sua sponte* issue a certificate of correction reflecting the amount of PTA days determined by the recalculation.

Prior to the issuance of the certificate of correction, the USPTO will afford patentee an opportunity to be heard and request reconsideration. Accordingly, patentee has **one month or thirty (30) days**, whichever is longer, to file a request for reconsideration of this patent term adjustment calculation. See 35 U.S.C. 154(b)(3)(B)(ii) and 37 CFR 1.322(a)(4). No extensions of time will be granted under 37 CFR 1.136.

Patentee should use document code PET.OP if electronically filing a request for reconsideration of this patent term adjustment calculation. The patentee must also include the information required by 37 CFR 1.705(b)(2) and the fee required by 37 CFR 1.18(e). If patentee does not file a timely request for reconsideration of this patent term adjustment calculation including the information required by 37 CFR 1.705(b)(2) and the fee required by 37 CFR 1.18(e), the USPTO will issue a certificate of correction reflecting the PTA determination noted above.

Patentee should be aware that in order to preserve the right to review in the United States District Court for the District of Columbia of the USPTO patent term adjustment determination, patentee must ensure that he or she also take the steps required under 35 U.S.C. 154(b)(4)(A) in a timely manner. Nothing in the request for recalculation should be construed as providing an alternative time frame for commencing a civil action under 35 U.S.C. 154(b)(4)(A).

Any questions concerning this decision should be directed to the Office of Patent Legal Administration at 571-272-7702.

UNITED STATES PATENT AND TRADEMARK OFFICE

UNITED STATES DEPARTMENT OF COMMERCE
United States Patent and Trademark Office
Address: COMMISSIONER FOR PATENTS
P.O. Box 1450
Alexandria, Virginia 22313-1450
www.uspto.gov

SCHWEGMAN, LUNDBERG & WOESSNER, P.A.
P.O. BOX 2938
MINNEAPOLIS, MN 55402

Mail Date: 04/30/2010

Applicant	: Eugene Yu-Chun Wu	: DECISION ON REQUEST FOR
Patent Number	: 7613511	: RECALCULATION of PATENT
Issue Date	: 11/03/2009	: TERM ADJUSTMENT IN VIEW
Application No	: 11/075,838	: OF WYETH AND NOTICE OF INTENT TO
Filed	: 03/09/2005	: ISSUE CERTIFICATE OF CORRECTION
		:

The Request for Recalculation is **GRANTED** to the extent indicated.

The patent term adjustment has been determined to be **0** days. The USPTO will *sua sponte* issue a certificate of correction reflecting the amount of PTA days determined by the recalculation.

Prior to the issuance of the certificate of correction, the USPTO will afford patentee an opportunity to be heard and request reconsideration. Accordingly, patentee has **one month or thirty (30) days**, whichever is longer, to file a request for reconsideration of this patent term adjustment calculation. See 35 U.S.C. 154(b)(3)(B)(ii) and 37 CFR 1.322(a)(4). No extensions of time will be granted under 37 CFR 1.136.

Patentee should use document code PET.OP if electronically filing a request for reconsideration of this patent term adjustment calculation. The patentee must also include the information required by 37 CFR 1.705(b)(2) and the fee required by 37 CFR 1.18(e). If patentee does not file a timely request for reconsideration of this patent term adjustment calculation including the information required by 37 CFR 1.705(b)(2) and the fee required by 37 CFR 1.18(e), the USPTO will issue a certificate of correction reflecting the PTA determination noted above.

Patentee should be aware that in order to preserve the right to review in the United States District Court for the District of Columbia of the USPTO patent term adjustment determination, patentee must ensure that he or she also take the steps required under 35 U.S.C. 154(b)(4)(A) in a timely manner. Nothing in the request for recalculation should be construed as providing an alternative time frame for commencing a civil action under 35 U.S.C. 154(b)(4)(A).

Any questions concerning this decision should be directed to the Office of Patent Legal Administration at 571-272-7702.

SPE RESPONSE FOR CERTIFICATE OF CORRECTION

DATE 9-2-09 Paper No.: _____

TO SPE OF : ART UNIT 2851

SUBJECT : Request for Certificate of Correction for Appl. No.: 11/075841 Patent No.: 7306338

Please respond to this request for a certificate of correction within 7 days.

FOR IFW FILES: Should COCC be approved

Please review the requested changes/corrections as shown in the **COCIN** document(s) in the IFW application image. No new matter should be introduced; nor should the scope or meaning of the claims be changed.

Please complete the response (see below) and forward the completed response to scanning using document code **COCX**.

FOR PAPER FILES:

Please review the requested changes/corrections as shown in the attached certificate of correction. Please complete this form (see below) and forward it with the file to:

Certificates of Correction Branch (C of C)
Randolph Square 9C62-D
Palm Location 7580

Ennis Young
Certificates of Correction Branch
703-756-1542

Thank You For Your Assistance

The request for issuing the above-identified correction(s) is hereby:
Note your decision on the appropriate box.

- [x] **Approved** — All changes apply.
- [ ] **Approved in Part** — Specify below which changes **do not** apply.
- [ ] **Denied** — State the reasons for denial below.

Comments: _____

Georgia Y. Epps
SPE

2878
Art Unit

PTOL-306 (REV. 7/03) U.S. DEPARTMENT OF COMMERCE Patent and Trademark Office

PTO/SB/44 (07-07)
Approved for use through 04/30/2007. OMB 0651-0033
U.S. Patent and Trademark Office; U.S. DEPARTMENT OF COMMERCE
Under the Paperwork Reduction Act of 1995, no persons are required to respond to a collection of information unless it displays a valid OMB control number.
(Also Form PTO-1050)

UNITED STATES PATENT AND TRADEMARK OFFICE
CERTIFICATE OF CORRECTION

PATENT NO.	:	7,594,378
APPLICATION NO.	:	11/075,843
ISSUE DATE	:	September 29, 2009
INVENTORS	:	Asahara et al.

It is certified that an error appears or errors appear in the above-identified patent and that said Letters Patent is hereby corrected as shown below:

Face of the Patent, Item (56) References Cited, U.S PATENT DOCUMENTS, add the following:

-- 6,854,249 B1 2/2005 Samejima et al. .....56/13.3 --

OK to Enter
AT 1/8/10

MAILING ADDRESS OF SENDER: The Webb Law Firm
700 Koppers Building
436 Seventh Avenue
Pittsburgh, PA 15219

This collection of information is required by 37 CFR 1.322, 1.323, and 1.324. The information is required to obtain or retain a benefit by the public which is to file (and by the USPTO to process) an application. Confidentiality is governed by 35 U.S.C. 122 and 37 CFR 1.14. This collection is estimated to take 1.0 hour to complete, including gathering, preparing, and submitting the completed application form to the USPTO. Time will vary depending upon the individual case. Any comments on the amount of time you require to complete this form and/or suggestions for reducing this burden, should be sent to the Chief Information Officer, U.S. Patent and Trademark Office, U.S. Department of Commerce, P.O. Box 1450, Alexandria, VA 22313-2450. DO NOT SEND FEES OR COMPLETED FORMS TO THIS ADDRESS. **SEND TO: Attention Certificate of Corrections Branch, Commissioner for Patents, P.O. Box 1450, Alexandria, VA 22313-1450.**

If you need assistance in completing the form, call 1-800-PTO-9199 and select Option 2.

SPE RESPONSE FOR CERTIFICATE OF CORRECTION

Paper No.: _____

DATE : 12-24-09

TO SPE OF : ART UNIT 3671

SUBJECT : Request for Certificate of Correction for Appl. No.: 11/075843 Patent No.: 7594378

Please respond to this request for a certificate of correction within 7 days.

FOR IFW FILES:

Please review the requested changes/corrections as shown in the **COCIN** document(s) in the IFW application image. No new matter should be introduced, nor should the scope or meaning of the claims be changed.

Please complete the response (see below) and forward the completed response to scanning using document code **COCX**.

FOR PAPER FILES:

Please review the requested changes/corrections as shown in the attached certificate of correction. Please complete this form (see below) and forward it with the file to:

Certificates of Correction Branch (CofC)
Randolph Square – 9D10-A
Palm Location 7580

Angela Green 703-756-1541
Certificates of Correction Branch
703-756-1814

Thank You For Your Assistance

The request for issuing the above-identified correction(s) is hereby:
Note your decision on the appropriate box.

- ☒ **Approved** — **All** changes apply.
- ☐ **Approved in Part** — Specify below which changes **do not** apply.
- ☐ **Denied** — State the reasons for denial below.

Comments: _____

/Thomas B Will/
Unit 3671

SPE — Art Unit

UNITED STATES PATENT AND TRADEMARK OFFICE

UNITED STATES DEPARTMENT OF COMMERCE
United States Patent and Trademark Office
Address: COMMISSIONER FOR PATENTS
P.O. Box 1450
Alexandria, Virginia 22313-1450
www.uspto.gov

WEBB ZIESENHEIM LOGSDON
ORKIN & HANSON, P.C.
700 Koppers Building
436 Seventh Avenue
Pittsburgh, PA 15219-1818

Mail Date: 04/21/2010

Applicant	: Masato Asahara	: DECISION ON REQUEST FOR
Patent Number	: 7594378	: RECALCULATION of PATENT
Issue Date	: 09/29/2009	: TERM ADJUSTMENT IN VIEW
Appliction No	: 11/075,843	: OF WYETH AND NOTICE OF INTENT TO
Filed	: 03/09/2005	: ISSUE CERTIFICATE OF CORRECTION
		:

The Request for Recalculation is **GRANTED** to the extent indicated.

The patent term adjustment has been determined to be **0** days. The USPTO will *sua sponte* issue a certificate of correction reflecting the amount of PTA days determined by the recalculation.

Prior to the issuance of the certificate of correction, the USPTO will afford patentee an opportunity to be heard and request reconsideration. Accordingly, patentee has **one month or thirty (30) days**, whichever is longer, to file a request for reconsideration of this patent term adjustment calculation. See 35 U.S.C. 154(b)(3)(B)(ii) and 37 CFR 1.322(a)(4). No extensions of time will be granted under 37 CFR 1.136.

Patentee should use document code PET.OP if electronically filing a request for reconsideration of this patent term adjustment calculation. The patentee must also include the information required by 37 CFR 1.705(b)(2) and the fee required by 37 CFR 1.18(e). If patentee does not file a timely request for reconsideration of this patent term adjustment calculation including the information required by 37 CFR 1.705(b)(2) and the fee required by 37 CFR 1.18(e), the USPTO will issue a certificate of correction reflecting the PTA determination noted above.

Patentee should be aware that in order to preserve the right to review in the United States District Court for the District of Columbia of the USPTO patent term adjustment determination, patentee must ensure that he or she also take the steps required under 35 U.S.C. 154(b)(4)(A) in a timely manner. Nothing in the request for recalculation should be construed as providing an alternative time frame for commencing a civil action under 35 U.S.C. 154(b)(4)(A).

Any questions concerning this decision should be directed to the Office of Patent Legal Administration at 571-272-7702.

UNITED STATES PATENT AND TRADEMARK OFFICE

Commissioner for Patents
United States Patent and Trademark Office
P.O. Box 1450
Alexandria, VA 22313-1450
www.uspto.gov

SCHNECK & SCHNECK
P.O. BOX 2-E
SAN JOSE, CA 95109-0005

COPY MAILED

AUG 1 0 2005

OFFICE OF PETITIONS

In re Application of :
Gary W. Ferrell and Jagjit S. Ratra :
Application No. 11/075,872 :
Filed: March 9, 2005 :
For: WAFER DRYER AND METHOD FOR :
DRYING A WAFER :

DECISION GRANTING PETITION
UNDER 37 CFR 1.47(a)

This is in response to the "Petition Under 37 CFR 1.47(a)," filed August 3, 2005.

The petition is **granted**.

Petitioner has shown that the non-signing inventor has refused to join in the filing of the above-identified application.

The above-identified application and papers have been reviewed and found in compliance with 37 CFR 1.47(a). This application is hereby accorded Rule 1.47(a) status. As provided in Rule 1.47(c), this Office will forward notice of this application's filing to the non-signing inventor at the address given in the petition. Notice of the filing of this application will also be published in the Official Gazette.

The file is being forwarded to the Office of Initial Patent Examination for further processing.

Telephone inquiries regarding this decision should be directed to the undersigned at (571) 272-3228.

Edward J. Tannouse
Petitions Attorney
Office of Petitions
Office of the Deputy Commissioner
for Patent Examination Policy

UNITED STATES PATENT AND TRADEMARK OFFICE

Commissioner for Patents
United States Patent and Trademark Office
P.O. Box 1450
Alexandria, VA 22313-1450
www.uspto.go

JAGJIT RATRA
1454 INWOOD COURT
CAMPBELL, CA 95008

COPY MAILED

AUG 1 0 2005

OFFICE OF PETITIONS

In re Application of
Gary W. Ferrell and Jagjit S. Ratra
Application No. 11/075,872
Filed: March 9, 2005
For: WAFER DRYER AND METHOD FOR DRYING A WAFER

Dear JAGJIT RATRA:

You are named as a joint inventor in the above identified United States patent application, filed under the provisions of 35 U.S.C. 116 (United States Code), and 37 CFR 1.47(a), Rules of Practice in Patent Cases. Should a patent be granted on the application you will be designated therein as a joint inventor.

As a named inventor you are entitled to inspect any paper in the file wrapper of the application, order copies of all or any part thereof (at a prepaid cost per 37 CFR 1.19) or make your position of record in the application. Alternatively, you may arrange to do any of the preceding through a registered patent attorney or agent presenting written authorization from you. If you care to join the application, counsel of record (see below) would presumably assist you. Joining in the application would entail the filing of an appropriate oath or declaration by you pursuant to 37 CFR 1.63.

Telephone inquiries regarding this communication should be directed to the undersigned at (571) 272-3228. Requests for information regarding your application should be directed to the File Information Unit at (703) 308-2733. Information regarding how to pay for and order a copy of the application, or a specific paper in the application, should be directed to Certification Division at (703) 308-9726 or 1 (800) 972-6382 (outside the Washington D.C. area).

Edward J. Tannouse
Petitions Attorney
Office of Petitions
Office of the Deputy Commissioner
for Patent Examination Policy

SCHNECK & SCHNECK
P.O. BOX 2-E
SAN JOSE, CA 95109-0005

UNITED STATES PATENT AND TRADEMARK OFFICE

Commissioner for Patents
United States Patent and Trademark Office
P.O. Box 1450
Alexandria, VA 22313-1450
www.uspto.gov
DIW Feb-06

WENDEROTH, LIND & PONACK, L.L.P.
2033 K STREET N. W.
SUITE 800
WASHINGTON DC 20006-1021

COPY MAILED

FEB 13 2006

OFFICE OF PETITIONS

In re Application of	:	
Shotaro Mochizuki	:	DECISION ON PETITION
Application No. 11/075,879	:	TO WITHDRAW HOLDING
Filed: 10 March, 2005	:	OF ABANDONMENT
Atty Docket No. 2005_0377	:	

This is a decision on the "Request for Withdrawal of Improper Holding of Abandonment" filed 26 January, 2006, which is being treated as a request to withdraw the holding of abandonment of the above-identified application.

This application was held abandoned for failure to respond in a timely manner to the non-final Office action requiring restriction and/or election mailed on 25 May, 2005. A Notice of Abandonment was mailed 18 January, 2006.

Petitioner asserts that a proper response was timely filed. In support of the petition, petitioner submits a copy of a postcard receipt date-stamped by the USPTO with a date of 27 June, 2005, acknowledging receipt of a response. The postcard identifies the application by applicant's name, application number, filing date, attorney docket number, and invention title. A copy of the Response was included with this petition.

The original correspondence filed was not matched with the file at the time the Notice of Abandonment was mailed and cannot be located. However, M.P.E.P. § 503 states, "[a] post card receipt which itemizes and properly identifies the papers which are being filed serves as *prima facie* evidence of receipt in the PTO of all the items listed thereon on the date stamped thereon by the PTO." Accordingly, it is concluded that the response was timely filed in the Office but was not matched with the application file.

For the reasons stated above, the Notice of Abandonment is hereby vacated and the holding of abandonment withdrawn.

The petition is **GRANTED**.

The application file will be forwarded to the Technology Center's technical support staff for entry of the response to the restriction requirement. Thereafter, the application file will be forwarded to the examiner for action in due course.

Telephone inquiries concerning this matter may be directed to the undersigned at (571)272-3231.

Douglas I. Wood
Senior Petitions Attorney
Office of Petitions

UNITED STATES PATENT AND TRADEMARK OFFICE

Commissioner for Patents
United States Patent and Trademark Office
P.O. Box 1450
Alexandria, VA 22313-1450
www.uspto.gov

MOSER, PATTERSON & SHERIDAN, LLP
APPLIED MATERIALS, INC.
3040 POST OAK BOULEVARD, SUITE 1500
HOUSTON TX 77056

COPY MAILED

JUL 2 5 2005

OFFICE OF PETITIONS

In re Application of	:	
Huong Thanh Nguyen et al.	:	
Application No. 11/075,903	:	ON PETITION
Filed: March 9, 2005	:	
Attorney Docket No.	:	
AMAT/5619.C1/DSM/LOW K/JW	:	

This is a decision on the petition filed June 10, 2005, requesting that the above-identified application be accorded a filing date of March 9, 2005, with Figures 4f-4g as described in the specification as a part of the original disclosure.

The petition is **DISMISSED**.

Since petitioners seek to have the filing date of March 9, 2005 accorded the application with the omitted items as part of the original disclosure, a petition fee in the amount of $400.00 is required for treatment of the petition.

Therefore, since no fees were submitted and since no deposit account has been authorized, this petition cannot be treated on the merits and will not receive any consideration until such time as the petition fee has been submitted.

After two months, if the fees have not been submitted, this matter will be referred to the Office of Initial Patent Examination for further pre-examination processing without Figures 4f-4g as part of the original disclosure. A request for reconsideration with the appropriate fees should be addressed as follows:

By mail: Mail Stop Petitions
Commissioner for Patents
P.O. Box 1450
Alexandria, VA 22313-1450

By FAX: (571) 273-8300
Office of Petitions

Telephone inquiries regarding this decision should be directed to the undersigned Petitions Attorney at (571) 272-3212.

Patricia Faison-Ball

Patricia Faison-Ball
Senior Petitions Attorney
Office of Petitions

UNITED STATES PATENT AND TRADEMARK OFFICE

Commissioner for Patents
United States Patent and Trademark Office
P.O. Box 1450
Alexandria, VA 22313-1450
www.uspto.gov

WARREN SKLAR
RENNER, OTTO, BOISSELLE & SKLAR, LLP
1621 EUCLID AVE
19TH FL
CLEVELAND, OH 44115

COPY MAILED

APR 0 2 2007

OFFICE OF PETITIONS

In re Application of	:	
James L. Fergason	:	
Application No. 11/075,906	:	DECISION ON PETITION UNDER
Application Filing Date: March 9, 2005	:	37 CFR 1.137(f)
Attorney Docket No. VEIAP-103USH		

This is a decision on the petition under 37 CFR 1.137(f), filed April 13, 2006, to revive the instant non-provisional application.

The petition under 37 CFR 1.137(f) is granted.

This application became abandoned pursuant to 35 U.S.C. § 122(b)(2)(B(iii) for failure to timely notify the Office of the filing of an application in a foreign country.

A petition under 37 CFR 1.137(f) must be accompanied by: (1) the reply which is met by the notification of such filing in a foreign country or under a multinational treaty[1]; (2) the petition fee as set forth in 37 CFR 1.17(m), and (3) a statement that the entire delay in filing the required reply from the due date of the reply until the filing of a grantable petition was unintentional. The Commissioner may require additional information where there is a question whether the delay was unintentional.

The instant petition is found in compliance with 37 CFR 1.137(f).

Accordingly, the failure to timely notify the Office of a foreign filing within 45 days as provided by 35 U.S.C. § 122(b)(2)(B)(iii) is accepted as having been unintentionally delayed.

The application file is being directed to Technology Center 2800, GAU 2851 for further processing.

Further inquiries regarding this decision may be directed to the undersigned at (571) 272-3222.

Kenya A. McLaughlin
Petitions Attorney
Office of Petitions

Enclosure: Communication Regarding Rescission of Nonpublication Request and/or Notice of Foreign Filing

[1] The filing of a petition under this section will not relieve applicant of his obligation to reply to any outstanding Office action.

UNITED STATES PATENT AND TRADEMARK OFFICE

Commissioner for Patents
United States Patent and Trademark Office
P.O. Box 1450
Alexandria, VA 22313-1450
www.uspto.gov

FINNEGAN, HENDERSON, FARABOW, GARRETT & DUNNER LLP
901 NEW YORK AVENUE, NW
WASHINGTON DC 20001-4413

MAILED

JUL 0 2 2009

OFFICE OF PETITIONS

In re Application of	:	
Tateyama, Kiyono	:	
Application No. 11/075,941	:	ON PETITION
Filed: March 10, 2005	:	
Attorney Docket No. 02860.0910	:	

This is a decision on the petition under 37 C.F.R. § 1.182, filed May 20, 2009, to change the name of an inventor.

The petition is **GRANTED.**

A petition under 37 CFR 1.182 to change an inventor's name must include (1) an appropriate petition fee, (2) a statement signed by the inventor setting forth both names and (3) the procedure whereby the change of name was effected, or a copy of the court order.

Petitioner has complied with all of the above-listed requirements. The name of the inventor will be changed from Kiyono IKENAKA to Kiyono TATEYAMA.

This matter is being directed to Technology Center AU 2627 for further examination on the merits.

Telephone inquiries regarding this decision should be directed to the undersigned at (571) 272-3206. All other inquiries should be directed to the Technology Center.

Liana Walsh
Petitions Examiner
Office of Petitions

Enclosure: Corrected Filing Receipt

UNITED STATES PATENT AND TRADEMARK OFFICE

UNITED STATES DEPARTMENT OF COMMERCE
United States Patent and Trademark Office
Address: COMMISSIONER FOR PATENTS
P.O. Box 1450
Alexandria, Virginia 22313-1450
www.uspto.gov

APPLICATION NUMBER	FILING or 371(c) DATE	GRP ART UNIT	FIL FEE REC'D	ATTY.DOCKET.NO	TOT CLAIMS	IND CLAIMS
11/075,941	03/10/2005	2627	1300	02860.0910	22	2

CONFIRMATION NO. 2590

CORRECTED FILING RECEIPT

22852
FINNEGAN, HENDERSON, FARABOW, GARRETT & DUNNER LLP
901 NEW YORK AVENUE, NW
WASHINGTON, DC 20001-4413

OC000000036702326

Date Mailed: 06/29/2009

Receipt is acknowledged of this non-provisional patent application. The application will be taken up for examination in due course. Applicant will be notified as to the results of the examination. Any correspondence concerning the application must include the following identification information: the U.S. APPLICATION NUMBER, FILING DATE, NAME OF APPLICANT, and TITLE OF INVENTION. Fees transmitted by check or draft are subject to collection. Please verify the accuracy of the data presented on this receipt. **If an error is noted on this Filing Receipt, please submit a written request for a Filing Receipt Correction. Please provide a copy of this Filing Receipt with the changes noted thereon. If you received a "Notice to File Missing Parts" for this application, please submit any corrections to this Filing Receipt with your reply to the Notice. When the USPTO processes the reply to the Notice, the USPTO will generate another Filing Receipt incorporating the requested corrections**

Applicant(s)

Kiyono Tateyama, Tokyo, JAPAN;

Assignment For Published Patent Application

KONICA MINOLTA OPTO, INC.

Power of Attorney: The patent practitioners associated with Customer Number 22852

Domestic Priority data as claimed by applicant

Foreign Applications

JAPAN JP2004-073025 03/15/2004

If Required, Foreign Filing License Granted: 03/31/2005

The country code and number of your priority application, to be used for filing abroad under the Paris Convention, is **US 11/075,941**

Projected Publication Date: Not Applicable

Non-Publication Request: No

Early Publication Request: No

Title

Objective optical element and optical pickup apparatus

Preliminary Class

369

PROTECTING YOUR INVENTION OUTSIDE THE UNITED STATES

Since the rights granted by a U.S. patent extend only throughout the territory of the United States and have no effect in a foreign country, an inventor who wishes patent protection in another country must apply for a patent in a specific country or in regional patent offices. Applicants may wish to consider the filing of an international application under the Patent Cooperation Treaty (PCT). An international (PCT) application generally has the same effect as a regular national patent application in each PCT-member country. The PCT process **simplifies** the filing of patent applications on the same invention in member countries, but **does not result** in a grant of "an international patent" and does not eliminate the need of applicants to file additional documents and fees in countries where patent protection is desired.

Almost every country has its own patent law, and a person desiring a patent in a particular country must make an application for patent in that country in accordance with its particular laws. Since the laws of many countries differ in various respects from the patent law of the United States, applicants are advised to seek guidance from specific foreign countries to ensure that patent rights are not lost prematurely.

Applicants also are advised that in the case of inventions made in the United States, the Director of the USPTO must issue a license before applicants can apply for a patent in a foreign country. The filing of a U.S. patent application serves as a request for a foreign filing license. The application's filing receipt contains further information and guidance as to the status of applicant's license for foreign filing.

Applicants may wish to consult the USPTO booklet, "General Information Concerning Patents" (specifically, the section entitled "Treaties and Foreign Patents") for more information on timeframes and deadlines for filing foreign patent applications. The guide is available either by contacting the USPTO Contact Center at 800-786-9199, or it can be viewed on the USPTO website at http://www.uspto.gov/web/offices/pac/doc/general/index.html.

For information on preventing theft of your intellectual property (patents, trademarks and copyrights), you may wish to consult the U.S. Government website, http://www.stopfakes.gov. Part of a Department of Commerce initiative, this website includes self-help "toolkits" giving innovators guidance on how to protect intellectual property in specific countries such as China, Korea and Mexico. For questions regarding patent enforcement issues, applicants may call the U.S. Government hotline at 1-866-999-HALT (1-866-999-4158).

LICENSE FOR FOREIGN FILING UNDER

Title 35, United States Code, Section 184

Title 37, Code of Federal Regulations, 5.11 & 5.15

GRANTED

The applicant has been granted a license under 35 U.S.C. 184, if the phrase "IF REQUIRED, FOREIGN FILING LICENSE GRANTED" followed by a date appears on this form. Such licenses are issued in all applications where the conditions for issuance of a license have been met, regardless of whether or not a license may be required as

set forth in 37 CFR 5.15. The scope and limitations of this license are set forth in 37 CFR 5.15(a) unless an earlier license has been issued under 37 CFR 5.15(b). The license is subject to revocation upon written notification. The date indicated is the effective date of the license, unless an earlier license of similar scope has been granted under 37 CFR 5.13 or 5.14.

This license is to be retained by the licensee and may be used at any time on or after the effective date thereof unless it is revoked. This license is automatically transferred to any related applications(s) filed under 37 CFR 1.53(d). This license is not retroactive.

The grant of a license does not in any way lessen the responsibility of a licensee for the security of the subject matter as imposed by any Government contract or the provisions of existing laws relating to espionage and the national security or the export of technical data. Licensees should apprise themselves of current regulations especially with respect to certain countries, of other agencies, particularly the Office of Defense Trade Controls, Department of State (with respect to Arms, Munitions and Implements of War (22 CFR 121-128)); the Bureau of Industry and Security, Department of Commerce (15 CFR parts 730-774); the Office of Foreign AssetsControl, Department of Treasury (31 CFR Parts 500+) and the Department of Energy.

NOT GRANTED

No license under 35 U.S.C. 184 has been granted at this time, if the phrase "IF REQUIRED, FOREIGN FILING LICENSE GRANTED" DOES NOT appear on this form. Applicant may still petition for a license under 37 CFR 5.12, if a license is desired before the expiration of 6 months from the filing date of the application. If 6 months has lapsed from the filing date of this application and the licensee has not received any indication of a secrecy order under 35 U.S.C. 181, the licensee may foreign file the application pursuant to 37 CFR 5.15(b).

UNITED STATES PATENT AND TRADEMARK OFFICE

UNITED STATES DEPARTMENT OF COMMERCE
United States Patent and Trademark Office
Address: COMMISSIONER FOR PATENTS
P.O. Box 1450
Alexandria, Virginia 22313-1450
www.uspto.gov

FINNEGAN, HENDERSON, FARABOW, GARRETT & DUNNER LLP
901 NEW YORK AVENUE, NW
WASHINGTON, DC 20001-4413

Mail Date: 05/21/2010

Applicant	: Kiyono Tateyama	: DECISION ON REQUEST FOR
Patent Number	: 7646696	: RECALCULATION of PATENT
Issue Date	: 01/12/2010	: TERM ADJUSTMENT IN VIEW
Application No	: 11/075,941	: OF WYETH AND NOTICE OF INTENT TO
Filed	: 03/10/2005	: ISSUE CERTIFICATE OF CORRECTION
		:

The Request for Recalculation is **GRANTED** to the extent indicated.

The patent term adjustment has been determined to be **883** days. The USPTO will *sua sponte* issue a certificate of correction reflecting the amount of PTA days determined by the recalculation.

Prior to the issuance of the certificate of correction, the USPTO will afford patentee an opportunity to be heard and request reconsideration. Accordingly, patentee has **one month or thirty (30) days**, whichever is longer, to file a request for reconsideration of this patent term adjustment calculation. See 35 U.S.C. 154(b)(3)(B)(ii) and 37 CFR 1.322(a)(4). No extensions of time will be granted under 37 CFR 1.136.

Patentee should use document code PET.OP if electronically filing a request for reconsideration of this patent term adjustment calculation. The patentee must also include the information required by 37 CFR 1.705(b)(2) and the fee required by 37 CFR 1.18(e). If patentee does not file a timely request for reconsideration of this patent term adjustment calculation including the information required by 37 CFR 1.705(b)(2) and the fee required by 37 CFR 1.18(e), the USPTO will issue a certificate of correction reflecting the PTA determination noted above.

Patentee should be aware that in order to preserve the right to review in the United States District Court for the District of Columbia of the USPTO patent term adjustment determination, patentee must ensure that he or she also take the steps required under 35 U.S.C. 154(b)(4)(A) in a timely manner. Nothing in the request for recalculation should be construed as providing an alternative time frame for commencing a civil action under 35 U.S.C. 154(b)(4)(A).

Any questions concerning this decision should be directed to the Office of Patent Legal Administration at 571-272-7702.

UNITED STATES PATENT AND TRADEMARK OFFICE

Commissioner for Patents
United States Patent and Trademark Office
P.O. Box 1450
Alexandria, VA 22313-1450
www.uspto.gov

Arlene J. Powers
Gauthier & Connors LLP
225 Franklin Street, Suite 2300
Boston, Massachusetts 02110

MAIL

NOV 02

Director's
Group 37

In re Application of	:	
Juby et al.	:	
Serial No. 11/075,942	:	DECISION ON PETITION
Filed: March 08, 2005	:	TO MAKE SPECIAL

For: ELECTRICAL POWER SUPPLY SYSTEM

Applicant's petition, filed August 18, 2005, seeks to have this application made special pursuant to the Accelerated Examination Program. The petition is GRANTED.

The petition has been reviewed and is found to be in compliance with the requirements for special status as set forth in Section 708.02(VIII) of the Manual of Patent Examining Procedures (MPEP).

Applicant is advised that the examiner's search will be restricted to the subject matter encompassed by the claims. In the event that the application receives a first action rejection, applicant is encouraged to arrange for an interview with the examiner, and to provide the examiner with a working copy of any proposed amendment one working day prior to the interview. Any amendment filed in response to a first action rejection, which would require broadening of the field of search will be treated as an improper response.

PETITION GRANTED.

Richard A. Bertsch

Richard A. Bertsch, Director
Technology Center 3700
571-272-3750

rt/ 11/01/05

UNITED STATES PATENT AND TRADEMARK OFFICE

UNITED STATES DEPARTMENT OF COMMERCE
United States Patent and Trademark Office
Address: COMMISSIONER FOR PATENTS
P.O. Box 1450
Alexandria, Virginia 22313-1450
www.uspto.gov

DOCKET CLERK
Kelly-Krause
PO BOX 12608
DALLAS, TX 75225

Mail Date: 04/21/2010

Applicant	: William Daniel Willey	: DECISION ON REQUEST FOR
Patent Number	: 7620024	: RECALCULATION of PATENT
Issue Date	: 11/17/2009	: TERM ADJUSTMENT IN VIEW
Appliction No	: 11/075,956	: OF WYETH AND NOTICE OF INTENT TO
Filed	: 03/09/2005	: ISSUE CERTIFICATE OF CORRECTION
		:

The Request for Recalculation is **GRANTED** to the extent indicated.

The patent term adjustment has been determined to be **619** days. The USPTO will *sua sponte* issue a certificate of correction reflecting the amount of PTA days determined by the recalculation.

Prior to the issuance of the certificate of correction, the USPTO will afford patentee an opportunity to be heard and request reconsideration. Accordingly, patentee has **one month or thirty (30) days**, whichever is longer, to file a request for reconsideration of this patent term adjustment calculation. See 35 U.S.C. 154(b)(3)(B)(ii) and 37 CFR 1.322(a)(4). No extensions of time will be granted under 37 CFR 1.136.

Patentee should use document code PET.OP if electronically filing a request for reconsideration of this patent term adjustment calculation. The patentee must also include the information required by 37 CFR 1.705(b)(2) and the fee required by 37 CFR 1.18(e). If patentee does not file a timely request for reconsideration of this patent term adjustment calculation including the information required by 37 CFR 1.705(b)(2) and the fee required by 37 CFR 1.18(e), the USPTO will issue a certificate of correction reflecting the PTA determination noted above.

Patentee should be aware that in order to preserve the right to review in the United States District Court for the District of Columbia of the USPTO patent term adjustment determination, patentee must ensure that he or she also take the steps required under 35 U.S.C. 154(b)(4)(A) in a timely manner. Nothing in the request for recalculation should be construed as providing an alternative time frame for commencing a civil action under 35 U.S.C. 154(b)(4)(A).

Any questions concerning this decision should be directed to the Office of Patent Legal Administration at 571-272-7702.

UNITED STATES PATENT AND TRADEMARK OFFICE

UNITED STATES DEPARTMENT OF COMMERCE
United States Patent and Trademark Office
Address: COMMISSIONER FOR PATENTS
P.O. Box 1450
Alexandria, Virginia 22313-1450
www.uspto.gov

SNELL & WILMER L.L.P. (Panasonic)
600 ANTON BOULEVARD
SUITE 1400
COSTA MESA, CA 92626

Mail Date: 04/21/2010

Applicant	: Masahiro Miki	: DECISION ON REQUEST FOR
Patent Number	: 7598662	: RECALCULATION of PATENT
Issue Date	: 10/06/2009	: TERM ADJUSTMENT IN VIEW
Appliction No	: 11/075,971	: OF WYETH AND NOTICE OF INTENT TO
Filed	: 03/09/2005	: ISSUE CERTIFICATE OF CORRECTION
		:

The Request for Recalculation is **GRANTED** to the extent indicated.

The patent term adjustment has been determined to be **609** days. The USPTO will *sua sponte* issue a certificate of correction reflecting the amount of PTA days determined by the recalculation.

Prior to the issuance of the certificate of correction, the USPTO will afford patentee an opportunity to be heard and request reconsideration. Accordingly, patentee has **one month or thirty (30) days**, whichever is longer, to file a request for reconsideration of this patent term adjustment calculation. See 35 U.S.C. 154(b)(3)(B)(ii) and 37 CFR 1.322(a)(4). No extensions of time will be granted under 37 CFR 1.136.

Patentee should use document code PET.OP if electronically filing a request for reconsideration of this patent term adjustment calculation. The patentee must also include the information required by 37 CFR 1.705(b)(2) and the fee required by 37 CFR 1.18(e). If patentee does not file a timely request for reconsideration of this patent term adjustment calculation including the information required by 37 CFR 1.705(b)(2) and the fee required by 37 CFR 1.18(e), the USPTO will issue a certificate of correction reflecting the PTA determination noted above.

Patentee should be aware that in order to preserve the right to review in the United States District Court for the District of Columbia of the USPTO patent term adjustment determination, patentee must ensure that he or she also take the steps required under 35 U.S.C. 154(b)(4)(A) in a timely manner. Nothing in the request for recalculation should be construed as providing an alternative time frame for commencing a civil action under 35 U.S.C. 154(b)(4)(A).

Any questions concerning this decision should be directed to the Office of Patent Legal Administration at 571-272-7702.

SPE RESPONSE FOR CERTIFICATE OF CORRECTION

Paper No.: _____

DATE : 3/8/07

TO SPE OF : ART UNIT 2891

SUBJECT : Request for Certificate of Correction on Patent No.: 7151276

A response is requested with respect to the accompanying request for a certificate of correction.

Please complete this form and return with file, within 7 days to:
Palm location **7580, Certificates of Correction Branch – South Tower – 9A22**
If response is for an IFW, **return to employee (named below) via PUBSCofC Team in MADRAS.**
With respect to the change(s) requested, correcting Office and/or Applicant's errors, should the patent read as shown in the certificate of correction (COCIN)? No new matter should be introduced, nor should the scope or meaning of the claims be changed.

Valerie Jackson

Thank You For Your Assistance

Certificates of Correction Branch
Tel. No. 703-308-9390 ext. 114

The request for issuing the above-identified correction(s) is hereby:
Note your decision on the appropriate box.

- ☒ **Approved** — All changes apply.
- ☐ **Approved in Part** — Specify below which changes **do not** apply.
- ☐ **Denied** — State the reasons for denial below.

Comments:

All changes clerical.

MWS

B. WILLIAM BAUMEISTER
SUPERVISORY PATENT EXAMINER
TECHNOLOGY CENTER 2800

SPE

2891
Art Unit

32692
Customer Number

Patent
Case No.: 60584US002

IN THE UNITED STATES PATENT AND TRADEMARK OFFICE

First Named Inventor:	GERLACH, CHRISTOPHER P.		
Patent No.:	7151276	Application No.:	11/075978
Dated:	December 19, 2006	Confirmation No.	5856
Title:	SEMICONDUCTORS CONTAINING PERFLUOROETHER ACYL OLIGOTHIOPHENE COMPOUNDS		

REQUEST FOR CERTIFICATE OF CORRECTION UNDER 37 CFR § 1.322 AND 1.323

Commissioner for Patents
Office of Publication
Attn: Certificate of Correction Branch
P.O. Box 1450
Alexandria, VA 22313-1450

Dear Sir:

It is respectfully requested that a Certificate of Correction be issued in connection with the above-identified patent. The required text is submitted on the attached form.

The errors are attributable to both the Applicant(s) and the Patent and Trademark Office.

☐ Please charge the fee provided in 37 CFR § 1.20(a) to Deposit Account No. 13-3723. One copy of this sheet marked duplicate is also enclosed.

☒ Any required fee will be paid at the time of EFS-Web submission.

☐ If necessary, charge any required fee, or credit any overpayment to Deposit Account No. 13-3723.

Respectfully submitted,

02/01/2007
Date

By: [signature]
John M. Bronk, Reg. No.: 58,441
Telephone No.: 651-733-8383

Office of Intellectual Property Counsel
3M Innovative Properties Company
Facsimile No.: 651-736-3833

Staple Here Only! Printer's Trim Line

UNITED STATES PATENT AND TRADEMARK OFFICE

CERTIFICATE OF CORRECTION

PATENT NO.: 7151276

DATED: December 19, 2006

FIRST NAMED INVENTOR: GERLACH, CHRISTOPHER P.

It is certified that error appears in the above-identified patent and that said Letters Patent is hereby corrected as shown below:

Page 1, Column 2

Line 18, after "6,821,348" delete "B1" and insert in place thereof - - B2 - -.

Abstract, line 8, delete "(2-perfluoroether acyl" and insert in place thereof - - (2-perfluoroetheracyl) - -.

Page 2, Column 1

Line 1, after "6,897,164" delete "B1" and insert in place thereof - - B2 - -.

Line 2, after "6,906,534" delete "B1" and insert in place thereof - - B2 - -.

Line 12, delete "5,5'Diheptafluorobutryryl-2,2'bithiophene" and insert in place thereof - - 5,5'-Diheptafluorobutyryl-2,2-'bithiophene - -.

Column 1

Line 50, after "electrode" insert - - , - -.

Column 4

Line 52, delete "alkyoxy" and insert in place thereof - - alkyloxy - -.

Line 61, delete "perfluoroinated" and insert in place thereof - - perfluorinated - -.

Column 5

Line 36, delete "CF_3—CF_{CF2}—," and insert in place thereof - - CF_3—CF_2—CF_2—, - -.

MAILING ADDRESS OF SENDER:

OFFICE OF INTELLECTUAL PROPERTY COUNSEL
3M INNOVATIVE PROPERTIES COMPANY
3M CENTER - P.O. BOX 33427
SAINT PAUL, MINNESOTA 55133-3427

PATENT NO. 7151276

No. of add'l copies: 0
@ 50¢ per page

No add'l copies

Staple Here Only! Printer's Trim Lines

UNITED STATES PATENT AND TRADEMARK OFFICE

CERTIFICATE OF CORRECTION

PATENT NO.: 7151276

DATED: December 19, 2006

FIRST NAMED INVENTOR: GERLACH, CHRISTOPHER P.

It is certified that error appears in the above-identified patent and that said Letters Patent is hereby corrected as shown below:

Column 7

Lines 23-27 (approx.) delete

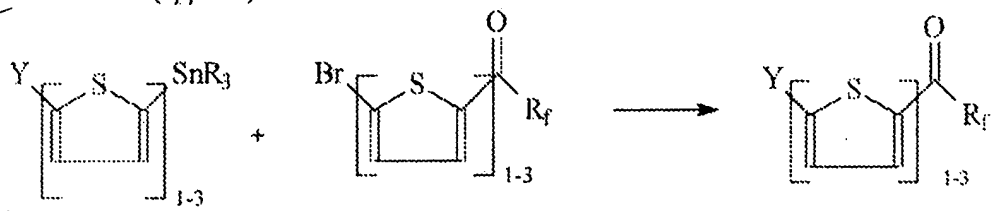

and insert in place there of

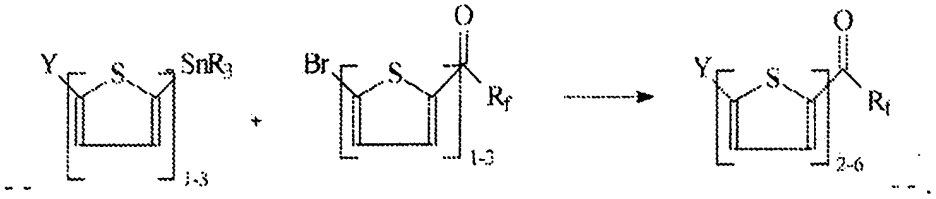

Line 43, delete "α,ω-bis(2-perfluoroetheracyl" and insert in place thereof - - α,ω-bis(2-perfluoroetheracyl) - -.

Column 8

Line 66, delete "etherate)," and insert in place thereof - - etherate, - -.

Column 9

Line 20, delete "co-5" and insert in place thereof - - ω-5 - -.

Line 30, after "groups" insert - -) - -.

Column 12

Line 41, after "et al.)" insert - - , - -.

MAILING ADDRESS OF SENDER:

OFFICE OF INTELLECTUAL PROPERTY COUNSEL
3M INNOVATIVE PROPERTIES COMPANY
3M CENTER - P.O. BOX 33427
SAINT PAUL, MINNESOTA 55133-3427

PATENT NO. 7151276

No. of add'l copies: -0-
@ 50¢ per page

No add'l copies

Staple Here Only! | Printer's Trim Lines

UNITED STATES PATENT AND TRADEMARK OFFICE

CERTIFICATE OF CORRECTION

PATENT NO.: 7151276

DATED: December 19, 2006

FIRST NAMED INVENTOR: GERLACH, CHRISTOPHER P.

It is certified that error appears in the above-identified patent and that said Letters Patent is hereby corrected as shown below:

Column 16

Line 52, delete "$BF_3.OEt_2$ and insert in place thereof - - $BF_3 \cdot OEt_2$ - -.

Line 64, delete "aford" and insert in place thereof - - afford - -.

Column 18

Line 1, delete "δ76.8" and insert in place thereof - - δ-76.8 - -.

Column 19

Line 33-34, delete "$_1$H NMR:" and insert in place thereof - - ^{1}H NMR: - -.

Line 36, delete "OCF2)," and insert in place thereof - - OCF_2), - -.

Line 41 (approx.), delete "$C_{17}H_4BrF_7O_3S_2$:" and insert in place thereof - - $C_{17}H_2BrF_{17}O_3S_2$: - -.

Column 20

Line 5 (approx.), delete "1701 cm-$_1$" and insert in place thereof - - 1701 cm^{-1} - -.

Line 7 (approx.), delete "^{9}F NMR:" and insert in place thereof - - ^{19}F NMR: - -.

Line 22 (approx.), delete "(65° C.) and insert - - (-65° C.) - -.

Line 25 (approx.), delete "65° C.," and insert in place thereof - - -65°C., - -.

Line 35, delete "^{9}F NMR:" and insert in place thereof - - ^{19}F NMR: - -.

Line 55, delete "nBuLi" and insert in place thereof - - n-BuLi - -.

MAILING ADDRESS OF SENDER:

OFFICE OF INTELLECTUAL PROPERTY COUNSEL
3M INNOVATIVE PROPERTIES COMPANY
3M CENTER - P.O. BOX 33427
SAINT PAUL, MINNESOTA 55133-3427

PATENT NO. 7151276

No. of add'l copies: -0-
@ 50¢ per page

No add'l copies

Staple Here Only! Printer's Trim Line.

UNITED STATES PATENT AND TRADEMARK OFFICE

CERTIFICATE OF CORRECTION

PATENT NO.: 7151276

DATED: December 19, 2006

FIRST NAMED INVENTOR: GERLACH, CHRISTOPHER P.

It is certified that error appears in the above-identified patent and that said Letters Patent is hereby corrected as shown below:

Column 21

Line 50, delete "(M+,)" and insert in place thereof - - (M^+), - -.

Column 23

Line 25, delete "5 kA" and insert in place thereof - - 5 kÅ - -.

Line 34, delete "$<5x10^{-6}$" and insert in place thereof - - $\leq 5x10^{-6}$ - -.

MAILING ADDRESS OF SENDER:

OFFICE OF INTELLECTUAL PROPERTY COUNSEL
3M INNOVATIVE PROPERTIES COMPANY
3M CENTER - P.O. BOX 33427
SAINT PAUL, MINNESOTA 55133-3427

PATENT NO. 7151276

No. of add'l copies: -0-
@ 50¢ per page

No add'l copies

UNITED STATES PATENT AND TRADEMARK OFFICE

Commissioner for Patents
United States Patent and Trademark Office
P.O. Box 1450
Alexandria, VA 22313-1450
www.uspto.gov

Joseph M. Sauer
Jones Day, North Point
901 Lakeside Avenue
Cleveland, OH 44114

COPY MAILED

JUN 05 2009

OFFICE OF PETITIONS

In re Application of	:	
Carles Puente Baliarda et al.	:	
Application No. 11/075,980	:	DECISION ON PETITION
Filed: March 9, 2005	:	TO WITHDRAW
Attorney Docket No. 153454600041	:	FROM RECORD
	:	

This is a decision on the Request to Withdraw as attorney or agent of record under 37 C.F.R. § 1.36(b), filed August 29, 2005.

The request is **moot because a revocation of power of attorney has been filed**.

A review of the file record indicates that the power of attorney to Joseph M. Sauer and all attorneys/agents of record has been revoked by the assignee of the patent application on September 23, 2005. Accordingly, the request to withdraw under 37 C.F.R. § 1.36(b) is moot.

All future communications from the Office will continue to be directed to the below-listed address until otherwise notified by applicant.

Telephone inquires concerning this decision should be directed to Kimberly Inabinet at 571-272-4618.

Kimberly Inabinet
Kimberly Inabinet
Petitions Examiner
Office of Petitions

cc: WINSTEAD PC
P.O. BOX 50784
DALLAS TX 75201

UNITED STATES PATENT AND TRADEMARK OFFICE

Commissioner for Patents
United States Patent and Trademark Office
P.O. Box 1450
Alexandria, VA 22313-1450
www.uspto.gov

David Grossman
George Mason University
MS 5G5
4400 University Drive
Fairfax, VA 22030

COPY MAILED

MAR 2 8 2007

OFFICE OF PETITIONS

In re Application of

Mark, et al.

Application No. 11/075,983

Filed: March 10, 2005

Attorney Docket No. GMU-03-005US

DECISION ON PETITION

This is a decision on the petition under 37 CFR §1.137(b), December 19, 2006, to revive the above-identified application.

The petition is **granted**.

This application became abandoned for failure to timely remit the issue fee of $700.00 and the publication fee of $300.00 as required by the Notice of Allowance and Issue Fee Due (the "Notice") mailed August 17, 2006. The Notice set forth a three (3) month statutory period for reply. No response was received within the allowable period. Accordingly, this application became abandoned on November 18, 2006. A Notice of Abandonment was mailed on December 13, 2006

The issue fee and publication fee were received on December 19, 2006.

The application is being forwarded to the Office of Patent Publications for further processing.

Telephone inquiries concerning this matter may be directed to the undersigned at (571) 272-3222.

Kenya A. McLaughlin
Petitions Attorney
Office of Petitions

UNITED STATES PATENT AND TRADEMARK OFFICE

Commissioner for Patents
United States Patent and Trademark Office
P.O. Box 1450
Alexandria, VA 22313-1450
www.uspto.gov

TYCO PLASTICS AND ADHESIVES
7 ROSZEL ROAD
PRINCETON, NJ 08550

COPY MAILED

JAN 23 2006

OFFICE OF PETITIONS

In re Application of	:	
Thomas Salmon, et al.	:	
Application No. 11/075,996	:	ON PETITION
Filed: March 9, 2005	:	
Attorney Docket No. P-AE-00004	:	

This is a decision on the petition under 37 CFR 1.137(b) filed October 24, 2005, to revive the above-identified application.

The petition is **GRANTED.**

The above-identified application became abandoned for failure to reply in a timely manner to the Notice to File Missing Parts of Nonprovisional Application mailed April 4, 2005. The Notice set a period for reply of two (2) months from the mail date of the Notice. No extensions of time under the provisions of 37 CFR 1.136(a) were obtained. Accordingly, the above-identified application became abandoned on June 6, 2005.

Telephone inquiries concerning this decision should be directed to the undersigned at (571) 272-3229.

This application matter is being referred to the Office of Initial Patent Examination for further processing.

Retta Williams

Retta Williams
Petitions Examiner
Office of Petitions

UNITED STATES PATENT AND TRADEMARK OFFICE

Commissioner for Patents
United States Patent and Trademark Office
P.O. Box 1450
Alexandria, VA 22313-1450
www.uspto.gov

LAW OFFICES OF MIKIO ISHIMARU
333 W. EL CAMINO REAL
SUITE 330
SUNNYVALE CA 94087

COPY MAILED

AUG 1 8 2008

OFFICE OF PETITIONS

In re Application of
Kelly K. HIGGINS
Application No. 11/075,999
Filed: March 08, 2005
Attorney Docket No. AF01646

DECISION ON PETITION

This is a decision on the petition under the unintentional provisions of 37 CFR 1.137(b), filed July 08, 2008, to revive the above-identified application.

The petition is **GRANTED**.

The application became abandoned for failure to reply in a timely manner to the non-final Office action mailed, November 13, 2007, which set a shortened statutory period for reply of three (3) month. No extensions of time under the provisions of 37 CFR 1.136(a) were obtained. Accordingly, the application became abandoned on February 14, 2008.

The petition satisfies the requirements of 37 CFR 1.137(b) in that petitioner has supplied (1) the reply in the form of an amendment; (2) the petition fee of $1,540.00; and (3) a proper statement of unintentional delay. Accordingly, the reply to the non-final Office action of November 13, 2007 is accepted as having been unintentionally delayed.

Telephone inquiries concerning this decision should be directed to the undersigned at (571) 272-4231.

The application file is being referred to Technology Center AU 2891 for appropriate action on the concurrently filed amendment.

Michelle R. Eason
Paralegal Specialist
Office of Petitions

UNITED STATES PATENT AND TRADEMARK OFFICE

Commissioner for Patents
United States Patent and Trademark Office
P.O. Box 1450
Alexandria, VA 22313-1450
www.uspto.gov

LAW OFFICES OF MIKIO ISHIMARU
333 W. EL CAMINO REAL
SUITE 330
SUNNYVALE CA 94087

COPY MAILED
JAN 12 2010

In re Application of	:	
Kelly Kyle HIGGINS et al.	:	
Application No. 11/075,999	:	DECISION ON PETITION
Filed: March 08, 2005	:	
Attorney Docket No. AF01646	:	

This is a decision on the petition under the unintentional provisions of 37 CFR 1.137(b), filed November 11, 2009, to revive the above-identified application.

The petition is **GRANTED**.

The application became abandoned for failure to reply in a timely manner to the non-final Office action mailed, December 09, 2008 which set a shortened statutory period for reply of three (3) month. No extensions of time under the provisions of 37 CFR 1.136(a) were obtained. Accordingly, the application became abandoned on March 10, 2009.

The petition satisfies the requirements of 37 CFR 1.137(b) in that petitioner has supplied (1) the reply in the form of an amendment; (2) the petition fee of $1,620.00; and (3) a proper statement of unintentional delay. Accordingly, the reply to the non-final Office action of December 09, 2008 is accepted as having been unintentionally delayed.

Telephone inquiries concerning this decision should be directed to the undersigned at (571) 272- 4231.

The application file is being referred to Technology Center AU 2895 for appropriate action on the concurrently filed amendment.

Michelle R. Eason
Paralegal Specialist
Office of Petitions

UNITED STATES PATENT AND TRADEMARK OFFICE

Commissioner for Patents
United States Patent and Trademark Office
P.O. Box 1450
Alexandria, VA 22313-1450
www.uspto.gov

MILLEN, WHITE, ZELANO & BRANIGAN, P.C.
2200 CLARENDON BOULEVARD
SUITE 1400
ARLINGTON, VA 22201

COPY MAILED

DEC 11 2007

OFFICE OF PETITIONS

In re Application of
Matthias Friebe et al
Application No. 11/076,023
Filed: March 10, 2005
Attorney Docket No. BOEHMER-0010

DECISION GRANTING PETITION
UNDER 37 CFR 1.313(c)(2)

This is a decision on the petition, filed December 7, 2007, under 37 CFR 1.313(c)(2) to withdraw the above-identified application from issue after payment of the issue fee.

The petition is **GRANTED**.

The above-identified application is withdrawn from issue for consideration of a submission under 37 CFR 1.114 (request for continued examination). See 37 CFR 1.313(c)(2).

Petitioner is advised that the issue fee paid on November 14, 2007 in the above-identified application cannot be refunded. If, however, the above-identified application is again allowed, petitioner may request that it be applied towards the issue fee required by the new Notice of Allowance.[1]

Telephone inquiries should be directed to the undersigned at (571) 272-3218.

This matter is being referred to Technology Center AU 1618 for processing of the request for continued examination under 37 CFR 1.114 and for consideration of the Information Disclosure Statement.

Frances Hicks
Petitions Examiner
Office of Petitions

C:\Documents and Settings\fhicks\My Documents\470\dec11\076023.wpd

---

[1] *The request to apply the issue fee to the new Notice may be satisfied by completing and returning the new Part B – Fee(s) Transmittal Form (along with any balance due at the time of submission). Petitioner is advised that the Issue Fee Transmittal Form must be completed and timely submitted to avoid abandonment.*

UNITED STATES PATENT AND TRADEMARK OFFICE

Commissioner for Patents
United States Patent and Trademark Office
P.O. Box 1450
Alexandria, VA 22313-1450
www.uspto.gov

MORRISON & FOERSTER LLP
1650 TYSONS BOULEVARD
SUITE 400
MCCLEAN, VA 22102

COPY MAILED

MAY 09 2007

OFFICE OF PETITIONS

In re Application of
Cay-Uwe Pinnow, et al
Application No. 11/076,027
Filed: March 10, 2005
Attorney Docket No. 543822012900

DECISION ON PETITION
TO WITHDRAW
FROM RECORD

This is a decision on the Request to Withdraw as attorney or agent of record under 37 C.F.R. § 1.36(b), filed March 2, 2007.

The request is **APPROVED**.

A grantable request to withdraw as attorney/agent of record must be signed by every attorney/agent seeking to withdraw or contain a clear indication that one attorney is signing on behalf of another/others. A request to withdraw will not be approved unless at least 30 (thirty) days would remain between the date of approval and the later of the expiration date of a time to file a response or the expiration date of the maximum time period which can be extended under 37 C.F.R. § 1.136(a).

The request was signed by Deborah Gladstein on behalf of all attorneys of record who are associated with customer No. 25227.

All attorneys/agents associated with the Customer Number 25227 have been withdrawn.

Applicant is reminded that there is no attorney of record at this time.

The request to change the correspondence of record is not acceptable as the requested correspondence address is not that of: (1) the first named signing inventor; or (2) an intervening assignee of the entire interest under 37 C.F.R 3.71. All future communications from the Office will be directed to the first named signing inventor at the first copied address below until otherwise properly notified by the applicant.

In order to request or take action in a patent matter, the assignee must establish its ownership of the patent to the satisfaction of the Director. In this regard, a Statement under 37 CFR 3.73(b) must have either: (i) documentary evidence of a chain of title from the original owner to the assignee (*e.g.*, copy of an executed assignment), and a statement affirming that the documentary evidence of the chain of title from the original owner to the assignee was or concurrently is being submitted for recordation pursuant to § 3.11; or (ii) a statement specifying where documentary evidence of a chain of title from the original owner to the assignee is recorded in the assignment records of the Office (*e.g.*, reel and frame number).

Telephone inquiries concerning this decision should be directed to Diane Goodwyn at 571-272-6735.

There are no pending Office actions pending at the present time.

April Wise
Petitions Examiner
Office of Petitions

cc: CAY-UWE PINNOW
REVALER STR. 16
MUNCHEN, GERMANY

cc: DICKE, BILLIG & CZAZA, P.L.L.C.
FIFTH STREET TOWERS
100 SOUTH FIFTH STREET, SUITE 2250
MINNEAPOLIA, MN 55402

UNITED STATES PATENT AND TRADEMARK OFFICE

UNITED STATES DEPARTMENT OF COMMERCE
United States Patent and Trademark Office
Address: COMMISSIONER FOR PATENTS
P.O. Box 1450
Alexandria, Virginia 22313-1450
www.uspto.gov

DICKSTEIN SHAPIRO LLP
1825 EYE STREET NW
Washington, DC 20006-5403

Mail Date: 04/23/2010

Applicant	: Hiroshi Maegawa	: DECISION ON REQUEST FOR
Patent Number	: 7633846	: RECALCULATION of PATENT
Issue Date	: 12/15/2009	: TERM ADJUSTMENT IN VIEW
Appliction No	: 11/076,056	: OF WYETH AND NOTICE OF INTENT TO
Filed	: 03/10/2005	: ISSUE CERTIFICATE OF CORRECTION
		:

The Request for Recalculation is **GRANTED** to the extent indicated.

The patent term adjustment has been determined to be **1315** days. The USPTO will *sua sponte* issue a certificate of correction reflecting the amount of PTA days determined by the recalculation.

Prior to the issuance of the certificate of correction, the USPTO will afford patentee an opportunity to be heard and request reconsideration. Accordingly, patentee has **one month or thirty (30) days**, whichever is longer, to file a request for reconsideration of this patent term adjustment calculation. See 35 U.S.C. 154(b)(3)(B)(ii) and 37 CFR 1.322(a)(4). No extensions of time will be granted under 37 CFR 1.136.

Patentee should use document code PET.OP if electronically filing a request for reconsideration of this patent term adjustment calculation. The patentee must also include the information required by 37 CFR 1.705(b)(2) and the fee required by 37 CFR 1.18(e). If patentee does not file a timely request for reconsideration of this patent term adjustment calculation including the information required by 37 CFR 1.705(b)(2) and the fee required by 37 CFR 1.18(e), the USPTO will issue a certificate of correction reflecting the PTA determination noted above.

Patentee should be aware that in order to preserve the right to review in the United States District Court for the District of Columbia of the USPTO patent term adjustment determination, patentee must ensure that he or she also take the steps required under 35 U.S.C. 154(b)(4)(A) in a timely manner. Nothing in the request for recalculation should be construed as providing an alternative time frame for commencing a civil action under 35 U.S.C. 154(b)(4)(A).

Any questions concerning this decision should be directed to the Office of Patent Legal Administration at 571-272-7702.

UNITED STATES PATENT AND TRADEMARK OFFICE

Commissioner for Patents
United States Patent and Trademark Office
P.O. Box 1450
Alexandria, VA 22313-1450
www.uspto.gov
DIW Sep-05

NEEDLE & ROSENBERG, P.C.
SUITE 1000
999 PEACHTREE STREET
ATLANTA GA 30309-3915

COPY MAILED

SEP 0 2 2005

OFFICE OF PETITIONS

In re Application of	:	
Paul Damian Nelson	:	
Application No. 11/076,082	:	ON PETITION
Filed: 9 March, 2005	:	
Atty Docket No. 07082.0009U2	:	

This is a decision on the petition filed on 19 August, 2005, requesting that the above-identified application be accorded a filing date of 9 March, 2005, with 12 sheets of drawings as a part of the original disclosure.

The petition is granted.

The application was filed on 9 March, 2005. However, on 27 April, 2005, Initial Patent Examination Division mailed a "Notice Of Incomplete Nonprovisional Application" stating that the application had not been accorded a filing date because the application was deposited without drawings. 35 U.S.C. § 113 (first sentence) requires a drawings "where necessary for the understanding of the subject matter sought to be patented."

In response, on 29 June, 2005, a preliminary amendment was filed, accompanied by 12 sheets of drawings. Accordingly, the application was assigned a filing date of 29 June, 2005.

On 19 August, 2005, the present petition was filed. Petitioner asserts that the above-identified application is a continuation of Application No. 10/343,043, and that the prior application was incorporated by reference on the transmittal letter.

A search of the official file reveals that on 9 March, 2005, a "Utility Patent Application Transmittal" letter was filed which states that the application is a continuation of application No.

10/343,043, and that the entire disclosure from the prior application is incorporated by reference.

The Office is construing the petition to mean that the drawings supplied on 29 June, 2005, constitute a copy of the drawings supplied with the prior application. Petitioners **must** inform the Office if this is not a correct interpretation.

Based on the incorporation by reference statement appearing in the transmittal letter filed with the application papers, stating that the disclosure of the prior application (identified as Application No. 10/343,043) was incorporated by reference in the present application on 9 March, 2005, it appears that 12 sheets of drawings were present in the Office on 9 March, 2005, albeit in the file of another application, *i.e.,* Application No. 10/343,043. Therefore, on petition, the application may be accorded the requested filing date.

The application will be processed and examined using the copy of one 12 sheet of drawings supplied on 29 June, 2005, as a part of the original disclosure.

The petition is granted. Since the petition was required to accord the requested filing date, the petition fee of $400.00 will not be refunded.

Of course, the primary examiner is expected to compare the 12 sheets of drawings supplied on 29 June, 2005, to the disclosure of prior application No. 10/343,043 in order to verify that the 12 sheets of drawings are, in fact, part of the disclosure of the prior application.

The application is being forwarded to the Office of Initial Patent Examination for correction of the filing date to 9 March, 2005, using the application papers filed on that date and the 12 sheets of drawings supplied with the present petition.

Telephone inquiries specific to this matter should be directed to the undersigned at 571-272-3231.

D Wood

Douglas I. Wood
Senior Petitions Attorney
Office of Petitions

UNITED STATES PATENT AND TRADEMARK OFFICE

Commissioner for Patents
United States Patent and Trademark Office
P.O. Box 1450
Alexandria, VA 22313-1450
www.uspto.gov

APR 29 2005

WILSON SONSINI GOODRICH & ROSATI
650 PAGE MILL ROAD
PALO ALTO CA 94304-1050

In re Application of	:
Daniel Henry Traynor et al.	:
Serial No.: 11/076,088	: PETITION TO MAKE SPECIAL
Filed: March 8, 2005	:
Attorney Docket No.: 31689-705.201	:

This is in response to applicants' petition filed April 05, 2005, to make the above-identified application special under the provisions of 37 CFR 1.102(c), based on the age of the applicant. No fee is required for this petition.

Applicants have satisfied the provisions set forth in M.P.E.P. 708.02, IV. Therefore, the petition is **GRANTED**.

The application will be forwarded to the examiner for action on the merits commensurate with this decision.

Should there be any questions with regard to this letter please contact Marianne C. Seidel by letter addressed to the Director, Technology Center 1600, PO BOX 1450, ALEXANDRIA, VA 22313-1450, or by telephone at 571-272-0584 or by facsimile transmission to the general Office facsimile number.

Marianne C. Seidel

Marianne C. Seidel
Special Program Examiner
Technology Center 1600

UNITED STATES PATENT AND TRADEMARK OFFICE

Commissioner for Patents
United States Patent and Trademark Office
P.O. Box 1450
Alexandria, VA 22313-1450
www.uspto.gov

JUN - 2 2005

WILSON SONSINI GOODRICH & ROSATI
650 PAGE MILL ROAD
PALO ALTO CA 94304-1050

In re Application of	:	
Daniel Henry Traynor, et al.	:	
Serial No.: 11/076,089	:	PETITION TO MAKE SPECIAL
Filed: April 5, 2005	:	
Attorney Docket No. 31689-703.201	:	

This is in response to applicant's petition filed on April 5, 2005 to make the above-identified application special under the provisions 37 CFR 1,102(c), based on the age of applicant. No fee is required for this petition.

Applicant has satisfied the provisions set forth in M.P.E.P. 708.02, IV. Therefore the petition is **GRANTED**.

The application will be forwarded to the examiner for action on the merits commensurate with this decision.

Should there by any questions with regard to this letter please contact William Dixon, Jr. by letter addressed to the Director, Technology Center 1600, P.O. Box 1450, ALEXANDRIA, VA 22313-1450, or by telephone at 572-272-0519 or by facsimile transmission to the general Office facsimile number.

William Dixon, Jr.
Special Program Examiner
Technology Center 1600

UNITED STATES PATENT AND TRADEMARK OFFICE

Commissioner for Patents
United States Patent and Trademark Office
P.O. Box 1450
Alexandria, VA 22313-1450
www.uspto.gov

Orum & Roth LLC
53 W Jackson Boulevard
Suite 1616
Chicago IL 60604-3606

COPY MAILED
OCT 1 0 2006
OFFICE OF PETITIONS

In re Application of	:	
PEREZ	:	
Application No. 11/076,169	:	DECISION ON PETITION
Filed: March 09, 2005	:	TO WITHDRAW
Attorney Docket No. 14028	:	FROM RECORD
	:	

This is a decision on the Request to Withdraw as attorney or agent under 37 C.F.R. § 1.36(b) or 37 C.F.R. § 10.40 filed July 16, 2006.

The request is **APPROVED**.

A review of the file record indicates that Catherine L. Gemrich: (1) does not have power of attorney in this patent application; and (2) has been employed or otherwise engaged in the proceedings in this patent application. In view of the present decision, Catherine L. Gemrich has been withdrawn from the present application and may not prepare or submit papers under 37 C.F.R. § 1.34, or correspond in any manner in this application unless appointed in an acceptable power of attorney under 37 C.F.R. § 1.32(b).

Applicant is reminded that there is no attorney of record at this time.

There is no outstanding Office action that requires a reply from the applicant.

The correspondence address remains unchanged.

Telephone inquires concerning this decision should be directed to Patricia Volpe at 571-272-6825.

for David Bucci
Petitions Examiner
Office of Petitions

UNITED STATES PATENT AND TRADEMARK OFFICE

Commissioner for Patents
United States Patent and Trademark Office
P.O. Box 1450
Alexandria, VA 22313-1450
www.uspto.gov

BELL, BOYD, & LLOYD LLC
P. O. BOX 1135
CHICAGO IL 60690-1135

COPY MAILED

NOV 29 2006

OFFICE OF PETITIONS

In re Application of	:
Luo	:
Application No. 11/076,190	: ON PETITION
Filed: March 8, 2005	:
Docket No.: 116566-015	:

This is a decision on the petition filed November 27, 2006, styled as being filed under 37 CFR 1.313(c), in view of an alleged mistake on the part of the Office, per 37 CFR 1.313(b)(1), to withdraw this application from issue.

The petition to withdraw this application from issue under 37 CFR 1.313(c) is **dismissed.**

Once, as here, the issue fee has been paid, the USPTO can only withdraw an application, upon request of the applicant if he or she fully complies with the applicable the provisions of 37 CFR 1.313(c)(1), or (c)(2), or (c)(3). See 65 *F.R.* 14865 at 14870 (Mar. 20, 2000):

> Comment (2): Two comments addressing the proposed change to § 1.313 suggested that the conditions under which an applicant could withdraw an application from issue after payment of the issue fee was too limited, and that § 1.313 should not preclude a request to withdraw an application from issue when reasonably efficient processing could prevent the patent from issuing without having some important matter considered.
>
> Response: The Office must limit withdrawal from issue after payment of the issue fee (at applicant's initiative) to those conditions specified in § 1.313(c) due to changes to the patent printing process, which will dramatically reduce the period between the date of issue fee payment and the date a patent is issued. An applicant who must have an important matter considered by the Office before a patent is issued must file a petition under § 1.313(c) to withdraw the application from issue to have such matter considered during continued examination under § 1.114 (if eligible) or in a continuing application, unless the applicant can meet the conditions specified in § 1.313(c)(1).

While petitioner points to 37 CFR 1.313(b) in support of his request under 37 CFR 1.313(c), petitioner appears to overlook that section 1.313(b) pertains only to acts on the volition of the USPTO, and not to a request by the applicant; the reasons as to why the USPTO acting on its own volition may withdraw an application from issue are immaterial to the reasons that an applicant may request withdrawal as set forth in the rule. Compare 1.313(b) with 37 CFR 1.313(c), and see also Changes to Implement the Patent Business Goals, Notice of Proposed Rulemaking, 64 FR 53772, 53810, 53838 (October 4, 1999), 1228 *Off. Gaz. Pat. Office* 15, 49, 76 (November 2, 1999). 37 CFR 1.313(b) applies to those instances where the USPTO, after payment of the issue fee, and acting on its *own volition*, seeks to withdraw an application from

issue. The filing of a paper, as here, prompting or suggesting that the Office take action of its own volition or *sua sponte*, is a contradiction in terms. In other words, the fact that petitioner has presented the instant written request for withdrawal from issue precludes its consideration under any of the provisions of 1.313(b); the instant petition filed by applicant can only be considered under the provisions of 37 CFR 1.313(c). Id. Indeed, MPEP 1308 subsection II, which pertains to withdrawal upon the volition of the USPTO gives as an express example wherein the USPTO will not withdraw an application from issue under 1.313(b):

> Examples of reasons that do not warrant withdrawing an application from issue after payment of the issue fee at the initiative of the Office are:
>
> (A) to permit the examiner to consider an information disclosure statement;
>
> (B) to permit the examiner to consider whether one or more claims are unpatentable...

Thus even if subsection (b) of 37 CFR 1.313 could be invoked by petitioner in this matter, the circumstances of the instant petition would not warrant withdrawal. Unfortunately for petitioner, as the instant petition fails to comply with any of the applicable provisions of 37 CFR 1.313(c), it must be dismissed. This however does not prevent petitioner from promptly amending the petition and showing consistent with 37 CFR 1.313(c)(1), or (c)(2), or (c)3, and seeking renewal of the petition.

As noticed in MPEP 1308, subsection I, Petitioner may with to check with the Office of Petitions staff at (571) 272-3282 whether sufficient time remains in which to renew the petition under 37 CFR 1.313(c)(1), or (c)(2), or (c)(3), as the undersigned does not treat **bona fide** petitions under 37 CFR 1.313(c)(1), or (c)(2), or (c)(3).

Telephone inquiries related to this decision only may be addressed to the undersigned at (571) 272-3217.

Brian Hearn
Petitions Examiner
Office of Petitions

UNITED STATES PATENT AND TRADEMARK OFFICE

Commissioner for Patents
United States Patent and Trademark Office
P.O. Box 1450
Alexandria, VA 22313-1450
www.uspto.gov

BELL, BOYD & LLOYD LLC
P O BOX 1135
CHICAGO, IL 60690-1135

COPY MAILED

DEC 0 4 2006

OFFICE OF PETITIONS

In re Application of :
Luo et al :
Application No. 11/076,190 : DECISION GRANTING PETITION
Filed: March 8, 2005 : UNDER 37 CFR 1.313(c)(2)
Attorney Docket No. 116566-015 :

This is a decision on the petition, filed December 1, 2006, under 37 CFR 1.313(c)(2) to withdraw the above-identified application from issue after payment of the issue fee.

The petition is **GRANTED**.

The above-identified application is withdrawn from issue for consideration of a submission under 37 CFR 1.114 (request for continued examination). See 37 CFR 1.313(c)(2).

Petitioner is advised that the issue fee paid on November 6, 2006 in the above-identified application cannot be refunded. If, however, the above-identified application is again allowed, petitioner may request that it be applied towards the issue fee required by the new Notice of Allowance.[1]

Telephone inquiries should be directed to the undersigned at (571) 272-3218.

This matter is being referred to Technology Center AU 2613 for processing of the request for continued examination under 37 CFR 1.114 and for consideration of the concurrently filed amendment.

Frances Hicks
Petitions Examiner
Office of Petitions

C:\Documents and Settings\FHicks\My Documents\470\313\076190.wpd

---

[1] *The request to apply the issue fee to the new Notice may be satisfied by completing and returning the new Part B – Fee(s) Transmittal Form (along with any balance due at the time of submission). Petitioner is advised that the Issue Fee Transmittal Form must be completed and timely submitted to avoid abandonment.*

UNITED STATES PATENT AND TRADEMARK OFFICE

COMMISSIONER FOR PATENTS
UNITED STATES PATENT AND TRADEMARK OFFICE
P.O. BOX 1450
ALEXANDRIA, VA 22313-1450
www.uspto.gov

DENISON & ASSOCS. PC
212 W. WASHINGTON ST, #2004
CHICAGO, IL 60606

COPY MAILED

MAR 30 2007

OFFICE OF PETITIONS

In re Application of :
Leslie Alan Milton :
Application No. 11/076,191 : DECISION ON PETITION
Filed: March 8, 2005 :
Attorney Docket No. None :

This is a decision on the petition, filed November 22, 2006, which is being treated as a petition under 37 CFR 1.181 (no fee) requesting withdrawal of the holding of abandonment in the above-identified application.

The petition is **DISMISSED**.

The application became abandoned for failure to timely respond to a Notice to File Corrected Application Papers (Notice) mailed July 22, 2005. The notice required replacement drawings in compliance with 37 CFR 1.84 and 37 CFR 1.12(d). A Notice of Abandonment was mailed on March 31, 2006. In response, on November 22, 2006, the present petition was filed.

Petitioner asserts that the notice dated July 22, 2005 was not received.

It is noted that petitioner alleges that a proper change of correspondence address was filed in this application. In support, petitioner has supplied a copy of a paper, directed to the above-noted application, containing a certificate of mailing dated October 4, 2004 entitled "Change of Address For Registered Patents and Pending Patent Application," as well a copy of a post card acknowledging receipt therefor in the U.S. Patent and Trademark Office on October 14, 2004.

This evidence would certainly be convincing if this application were filed any time before October 14, 2004. However, this application was not filed until March 8, 2005. Therefore, it is unclear how a paper purportedly filed October 14, 2004 could be considered a part of the record of this application.

The written record indicates there was no irregularity in the mailing of the Office communication of July 22, 2005. The Notice was mailed to the correspondence address noted on the declaration filed March 8, 2005. The first change of correspondence address was not filed until September 8, 2006. Therefore, the Notice was properly mailed to the practitioner at the address of record at that time.

Absent the required evidence to establish non-receipt of the Notice of July 22, 2005, the petition requesting withdrawal of the holding of abandonment cannot be granted.

If petitioner cannot supply the evidence necessary to withdraw the holding of abandonment, or simply does not wish to, petitioner should consider filing a petition under 37 CFR 1.137(b) stating that the delay was unintentional. Public Law 97-247, § 3, 96 Stat. 317 (1982), which revised patent and trademark fees, amended 35 U.S.C. § 41(a)(7) to provide for the revival of an "unintentionally" abandoned application without a showing that the delay in prosecution or in late payment of the issue fee was "unavoidable." This amendment to 35 U.S.C. § 41(a)(7) has been implemented in 37 CFR 1.137(b). An "unintentional" petition under 37 CFR 1.137(b) must be accompanied by the $ petition fee.

The filing of a petition under 37 CFR 1.137(b) cannot be intentionally delayed and therefore must be filed promptly. A person seeking revival due to unintentional delay cannot make a statement that the delay was unintentional unless the entire delay, including the date it was discovered that the application was abandoned until the filing of the petition to revive under 37 CFR 1.137(b), was unintentional. A statement that the delay was unintentional is not appropriate if petitioner intentionally delayed the filing of a petition for revival under 37 CFR 1.137(b).

Further correspondence with respect to this matter should be addressed as follows:

By Mail: Mail Stop PETITION
Commissioner for Patents
P. O. Box 1450
Alexandria, VA 22313-1450

By hand: U. S. Patent and Trademark Office
Customer Service Window, Mail Stop Petitions
Randolph Building
401 Dulany Street
Alexandria, VA 22314

By facsimile: **(571) 273-8300**
Attn: Office of Petitions

Telephone inquiries concerning this decision may be directed to the undersigned at (571) 272-3204.

Sherry D. Brinkley
Petitions Examiner
Office of Petitions

UNITED STATES PATENT AND TRADEMARK OFFICE

COMMISSIONER FOR PATENTS
UNITED STATES PATENT AND TRADEMARK OFFICE
P.O. BOX 1450
ALEXANDRIA, VA 22313-1450
www.uspto.gov

COPY MAILED

JUL 06 2007

OFFICE OF PETITIONS

DENISON & ASSOCS. PC
212 W. WASHINGTON ST, #2004
CHICAGO, IL 60606

In re Application of
Leslie A. Milton
Application No. 11/076,191
Filed: March 8, 2005
Attorney Docket No. None

ON PETITION

This is a decision in response to the petition filed May 25, 2007, to revive the above-identified application under the provisions of 37 CFR 1.137(b).

The petition is **GRANTED**.

A review of the record discloses that the application became abandoned for a failure to timely respond to a Notice to File Corrected Application Papers mailed July 22, 2005. The notice set a period of two months to file replacement drawings in compliance with 37 CFR 1.84 and 37 CFR 1.121(d). A Notice of Abandonment was mailed on March 31, 2006. In response, on November 22, 2006, a petition to withdraw the holding of abandonment was filed; however, the petition was dismissed in a decision mailed March 30, 2007. On May 25, 2007, the present petition was filed.

The petition satisfies the requirements of 37 CFR 1.137(b) in that petitioner has supplied (1) the reply in the form of replacement drawings; (2) the petition fee of $750; and (3) an adequate statement of unintentional delay[1].

The application is being returned to the Office of Initial Patent Examination (OIPE) for further review of the replacement drawings provided on November 22, 2005.

Telephone inquires related to this decision should be directed to the undersigned at (571) 272-3204. Telephone inquiries related to OIPE processing should be directed to their hotline at (703) 308-1202.

Sherry D. Brinkley
Petitions Examiner
Office of Petitiosn

[1] 37 CFR 1.137(b)(3) requires a statement that the entire delay in filing the required reply from the due date for the reply until the filing of a grantable petition pursuant to 37 CFR 1.137(b) was unintentional. Although the statement contained in the petition varies from the language required by 37 CFR 1.137(b)(3), the statement will be construed as the statement required by 37 CFR 1.137(b)(3). Petitioner must notify the Office if this is **not** a correct interpretation of the statement contained in the instant petition.

UNITED STATES PATENT AND TRADEMARK OFFICE

Commissioner for Patents
United States Patent and Trademark Office
P.O. Box 1450
Alexandria, VA 22313-1450
www.uspto.gov

DENISON & ASSOCS. PC
212 W. WASHINGTON ST, #2004
CHICAGO IL 60606

COPY MAILED

JUL 1 0 2008

OFFICE OF PETITIONS

In re Application of:
MILTON, Leslie Alan
Application No. 11/076,191
Filed: March 8, 2005
Attorney Docket No.

ON PETITION

This is a decision on the Petition To Expunge, filed October 11, 2006. The present Petition has been treated as a petition under 37 CFR 1.59. The Petition was accompanied by authorization to "adjust" Deposit Account 09-0640 for the requisite $200.00 petition fee.

The petition is **DISMISSED.**

Currently, Deposit Account 09-0640 does not contain sufficient funds the cover the requisite $200.00 petition fee. Despite a prior courtesy call to Petitioner's firm regarding this matter, the deposit account continues to have insufficient funds to cover payment of the petition fee. On this basis, the petition to expunge must be dismissed.

Telephone inquiries concerning this decision should be directed to Brian W. Brown at (571) 272-5338.

Brian W. Brown
Petitions Examiner
Office of Petitions

UNITED STATES PATENT AND TRADEMARK OFFICE

Commissioner for Patents
United States Patent and Trademark Office
P.O. Box 1450
Alexandria, VA 22313-1450
www.uspto.gov

Leydig, Voit & Mayer, LTD.
(Seattle Office)
Two Prudential Plaza
Suite 4900
Chicago, IL 60601-6731

COPY MAILED

FEB 2 0 2008

OFFICE OF PETITIONS

In re Application of	:	
John H. Selby	:	
Application No. 11/076,198	:	DECISION ON PETITION
Filed: March 9, 2005	:	TO WITHDRAW
Attorney Docket No. 306761	:	FROM RECORD
	:	

This is a decision on the Request to Withdraw as attorney or agent of record under 37 C.F.R. § 1.36(b), filed January 14, 2008.

The request is **NOT APPROVED**.

A grantable request to withdraw as attorney/agent of record must be signed by every attorney/agent seeking to withdraw or contain a clear indication that one attorney is signing on behalf of another/others. A request to withdraw will not be approved unless at least 30 (thirty) days would remain between the date of approval and the later of the expiration date of a time to file a response or the expiration date of the maximum time period which can be extended under 37 C.F.R. § 1.136(a).

The request cannot be approved because the customer number listed on the request to withdraw is not of record. The Oath and Declaration filed on March 9, 2005 does not appoint customer number 33042 as attorneys of record only for a correspondence address.

All future communications from the Office will continue to be directed to the above-listed address until otherwise notified by applicant. A courtesy copy will be mailed to the address noted on the request.

There are no outstanding Office actions at this time.

Telephone inquiries concerning this decision should be directed to Kimberly Inabinet at 571-272- 4618.

Kimberly Inabinet
Petitions Examiner
Office of Petitions

cc: John Selby
80676 Avenida Santa Marta
Indio, CA 92203

UNITED STATES PATENT AND TRADEMARK OFFICE

COMMISSIONER FOR PATENTS
UNITED STATES PATENT AND TRADEMARK OFFICE
P.O. BOX 1450
ALEXANDRIA, VA 22313-1450
www.uspto.gov

Leydig, Voit & Mayer, LTD.
(Seattle Office)
Two Prudential Plaza
Suite 4900
Chicago, IL 60601-6731

COPY MAILED

APR 2 8 2008

OFFICE OF PETITIONS

In re Application of
John H. Selby
Application No. 11/076,198
Filed: March 9, 2005
Attorney Docket No. 306761

DECISION ON PETITION
TO WITHDRAW
FROM RECORD

This is a decision on the renewed Request to Withdraw as attorney or agent under 37 C.F.R. § 1.36(b) or 37 C.F.R. § 10.40 filed March 24, 2008.

The request is **APPROVED**.

A grantable request to withdraw as attorney/agent of record must be signed by every attorney/agent seeking to withdraw or contain a clear indication that one attorney is signing on behalf of another/others. A request to withdraw will not be approved unless at least 30 (thirty) days would remain between the date of approval and the later of the expiration date of a time to file a response or the expiration date of the maximum time period which can be extended under 37 C.F.R. § 1.136(a).

The request was signed by John B. Conklin on behalf of all attorneys/agents associated with customer number 23460. All attorneys/agents of associated with customer number 23460 have been withdrawn.

The correspondence address has been changed and is copied below.

Applicant is reminded that there is no attorney of record at this time.

Telephone inquires concerning this decision should be directed to Kimberly Inabinet at 571-272-4618.

Kimberly Inabinet
Petitions Examiner
Office of Petitions

cc: John Selby
Social Capital Insurance Services, Inc.
80676 Avenida Santa Marta
Indio, CA 92203

UNITED STATES PATENT AND TRADEMARK OFFICE

UNITED STATES DEPARTMENT OF COMMERCE
United States Patent and Trademark Office
Address: COMMISSIONER FOR PATENTS
P.O. Box 1450
Alexandria, Virginia 22313-1450
www.uspto.gov

APPLICATION NUMBER	FILING OR 371(C) DATE	FIRST NAMED APPLICANT	ATTY. DOCKET NO./TITLE
11/076,198	03/09/2005	John H. Selby	306761

CONFIRMATION NO. 5289

POWER OF ATTORNEY NOTICE

33042
LEYDIG, VOIT & MAYER, LTD.
(SEATTLE OFFICE)
TWO PRUDENTIAL PLAZA
SUITE 4900
CHICAGO, IL 60601-6731

OC000000029610865

Date Mailed: 04/28/2008

NOTICE REGARDING CHANGE OF POWER OF ATTORNEY

This is in response to the Power of Attorney filed 03/24/2008.

- The withdrawal as attorney in this application has been accepted. Future correspondence will be mailed to the new address of record. 37 CFR 1.33.

/kainabinet/

Office of Data Management, Application Assistance Unit (571) 272-4000, or (571) 272-4200, or 1-888-786-0101

UNITED STATES PATENT AND TRADEMARK OFFICE

Commissioner for Patents
United States Patent and Trademark Office
P.O. Box 1450
Alexandria, VA 22313-1450
www.uspto.gov

COPY MAILED

SEP 20 2007

OFFICE OF PETITIONS

PRO-TECHTOR INTERNATIONAL
20775 NORADA COURT
SARATOGA CA 95070-3018

In re Application of	:	
Chin-Hui Chen et al	:	
Application No. 11/076,243	:	DECISION GRANTING PETITION
Filed: March 8, 2005	:	UNDER 37 CFR 1.137(b)
Attorney Docket No. 1291078	:	

This is a decision on the petition under 37 CFR 1.181 (no fee) to withdraw the holding of abandonment filed June 26, 2006. This is also a decision on the petition filed April 20, 2007 under 37 CFR 1.137(b), to revive the above-identified application.

The petition under 37 CFR 1.181 is **DISMISSED**.

The petition under 37 CFR 1.137(b)is **GRANTED**.

The above-identified application became abandoned for failure to submit the issue and publication fee in a timely manner in reply to the Notice of Allowance mailed January 24, 2006, which set a period for reply of three (3) months. Accordingly, the application became abandoned on April 25, 2006.

The previously filed issue and publication fees (February 27, 2006)to be paid by credit card were declined, as noted in the petition under 37 CFR 1.137(b) filed April 20, 2007. Therefore, the petition under 37 CFR 1.181 is dismissed.

However, the petition under 37 CFR 1.137(b) to revive the above-identified application, is **GRANTED**.

The petition satisfies the conditions for revival pursuant to the provisions of 37 CFR 1.137(b) in that (1) the reply in the form of the issue and publication fee; (2) the petition fee; and (3) the required statement of unintentional delay have been received. Accordingly, the reply to the Notice of Allowance of January 24, 2006, is accepted as having been unintentionally delayed.

If petitioner desires to have the information normally found thereon printed on the patent, the attached blank Issue Fee Transmittal Form should be completed and returned to the

Publishing Division within **ONE MONTH** from the mail date of this decision.

There is no indication that the person signing the instant petition was ever given a power of attorney or authorization of agent to prosecute the above-identified application. If the person signing the instant petition desires to receive future correspondence regarding this application, the appropriate power of attorney or authorization of agent must be submitted.

Telephone inquiries concerning this decision should be directed to the undersigned at (571) 272-3208.

This matter is being referred to Patent Publication.

Karen Creasy

Karen Creasy
Petitions Examiner
Office of Petitions

Attachment: Blank Issue Fee Transmittal Form PTOL 85(b).

PART B - FEE(S) TRANSMITTAL

Complete and send this form, together with applicable fee(s), to: Mail **Mail Stop ISSUE FEE**
Commissioner for Patents
P.O. Box 1450
Alexandria, Virginia 22313-1450
or Fax (571) 273-2885

INSTRUCTIONS: This form should be used for transmitting the ISSUE FEE and PUBLICATION FEE (if required). Blocks 1 through 5 should be completed where appropriate. All further correspondence including the Patent, advance orders and notification of maintenance fees will be mailed to the current correspondence address as indicated unless corrected below or directed otherwise in Block 1, by (a) specifying a new correspondence address; and/or (b) indicating a separate "FEE ADDRESS" for maintenance fee notifications.

CURRENT CORRESPONDENCE ADDRESS (Note: Use Block 1 for any change of address)

Note: A certificate of mailing can only be used for domestic mailings of the Fee(s) Transmittal. This certificate cannot be used for any other accompanying papers. Each additional paper, such as an assignment or formal drawing, must have its own certificate of mailing or transmission.

Certificate of Mailing or Transmission

I hereby certify that this Fee(s) Transmittal is being deposited with the United States Postal Service with sufficient postage for first class mail in an envelope addressed to the Mail Stop ISSUE FEE address above, or being facsimile transmitted to the USPTO (571) 273-2885, on the date indicated below.

(Depositor's name)
(Signature)
(Date)

APPLICATION NO.	FILING DATE	FIRST NAMED INVENTOR	ATTORNEY DOCKET NO.	CONFIRMATION NO.

TITLE OF INVENTION:

APPLN. TYPE	SMALL ENTITY	ISSUE FEE	PUBLICATION FEE	TOTAL FEE(S) DUE	DATE DUE

EXAMINER	ART UNIT	CLASS-SUBCLASS

1. Change of correspondence address or indication of "Fee Address" (37 CFR 1.363).

☐ Change of correspondence address (or Change of Correspondence Address form PTO/SB/122) attached.

☐ "Fee Address" indication (or "Fee Address" Indication form PTO/SB/47; Rev 03-02 or more recent) attached. **Use of a Customer Number is required.**

2. For printing on the patent front page, list

(1) the names of up to 3 registered patent attorneys or agents OR, alternatively,

(2) the name of a single firm (having as a member a registered attorney or agent) and the names of up to 2 registered patent attorneys or agents. If no name is listed, no name will be printed.

1 _____

2 _____

3 _____

3. ASSIGNEE NAME AND RESIDENCE DATA TO BE PRINTED ON THE PATENT (print or type)

PLEASE NOTE: Unless an assignee is identified below, no assignee data will appear on the patent. If an assignee is identified below, the document has been filed for recordation as set forth in 37 CFR 3.11. Completion of this form is NOT a substitute for filing an assignment.

(A) NAME OF ASSIGNEE

(B) RESIDENCE: (CITY and STATE OR COUNTRY)

Please check the appropriate assignee category or categories (will not be printed on the patent) : ☐ Individual ☐ Corporation or other private group entity ☐ Government

4a. The following fee(s) are enclosed:

☐ Issue Fee

☐ Publication Fee (No small entity discount permitted)

☐ Advance Order - # of Copies _____

4b. Payment of Fee(s):

☐ A check in the amount of the fee(s) is enclosed.

☐ Payment by credit card. Form PTO-2038 is attached.

☐ The Director is hereby authorized by charge the required fee(s), or credit any overpayment, to Deposit Account Number _____ (enclose an extra copy of this form).

5. **Change in Entity Status** (from status indicated above)

☐ a. Applicant claims SMALL ENTITY status. See 37 CFR 1.27.

☐ b. Applicant is no longer claiming SMALL ENTITY status. See 37 CFR 1.27(g)(2).

The Director of the USPTO is requested to apply the Issue Fee and Publication Fee (if any) or to re-apply any previously paid issue fee to the application identified above.
NOTE: The Issue Fee and Publication Fee (if required) will not be accepted from anyone other than the applicant; a registered attorney or agent; or the assignee or other party in interest as shown by the records of the United States Patent and Trademark Office.

Authorized Signature _____ Date _____

Typed or printed name _____ Registration No. _____

This collection of information is required by 37 CFR 1.311. The information is required to obtain or retain a benefit by the public which is to file (and by the USPTO to process) an application. Confidentiality is governed by 35 U.S.C. 122 and 37 CFR 1.14. This collection is estimated to take 12 minutes to complete, including gathering, preparing, and submitting the completed application form to the USPTO. Time will vary depending upon the individual case. Any comments on the amount of time you require to complete this form and/or suggestions for reducing this burden, should be sent to the Chief Information Officer, U.S. Patent and Trademark Office, U.S. Department of Commerce, P.O. Box 1450, Alexandria, Virginia 22313-1450. DO NOT SEND FEES OR COMPLETED FORMS TO THIS ADDRESS. SEND TO: Commissioner for Patents, P.O. Box 1450, Alexandria, Virginia 22313-1450.

Under the Paperwork Reduction Act of 1995, no persons are required to respond to a collection of information unless it displays a valid OMB control number.

Privacy Act Statement

The **Privacy Act of 1974 (P.L. 93-579)** requires that you be given certain information in connection with your submission of the attached form related to a patent application or patent. Accordingly, pursuant to the requirements of the Act, please be advised that: (1) the general authority for the collection of this information is 35 U.S.C. 2(b)(2); (2) furnishing of the information solicited is voluntary; and (3) the principal purpose for which the information is used by the U.S. Patent and Trademark Office is to process and/or examine your submission related to a patent application or patent. If you do not furnish the requested information, the U.S. Patent and Trademark Office may not be able to process and/or examine your submission, which may result in termination of proceedings or abandonment of the application or expiration of the patent.

The information provided by you in this form will be subject to the following routine uses:

1. The information on this form will be treated confidentially to the extent allowed under the Freedom of Information Act (5 U.S.C. 552) and the Privacy Act (5 U.S.C 552a). Records from this system of records may be disclosed to the Department of Justice to determine whether disclosure of these records is required by the Freedom of Information Act.
2. A record from this system of records may be disclosed, as a routine use, in the course of presenting evidence to a court, magistrate, or administrative tribunal, including disclosures to opposing counsel in the course of settlement negotiations.
3. A record in this system of records may be disclosed, as a routine use, to a Member of Congress submitting a request involving an individual, to whom the record pertains, when the individual has requested assistance from the Member with respect to the subject matter of the record.
4. A record in this system of records may be disclosed, as a routine use, to a contractor of the Agency having need for the information in order to perform a contract. Recipients of information shall be required to comply with the requirements of the Privacy Act of 1974, as amended, pursuant to 5 U.S.C. 552a(m).
5. A record related to an International Application filed under the Patent Cooperation Treaty in this system of records may be disclosed, as a routine use, to the International Bureau of the World Intellectual Property Organization, pursuant to the Patent Cooperation Treaty.
6. A record in this system of records may be disclosed, as a routine use, to another federal agency for purposes of National Security review (35 U.S.C. 181) and for review pursuant to the Atomic Energy Act (42 U.S.C. 218(c)).
7. A record from this system of records may be disclosed, as a routine use, to the Administrator, General Services, or his/her designee, during an inspection of records conducted by GSA as part of that agency's responsibility to recommend improvements in records management practices and programs, under authority of 44 U.S.C. 2904 and 2906. Such disclosure shall be made in accordance with the GSA regulations governing inspection of records for this purpose, and any other relevant (*i.e.*, GSA or Commerce) directive. Such disclosure shall not be used to make determinations about individuals.
8. A record from this system of records may be disclosed, as a routine use, to the public after either publication of the application pursuant to 35 U.S.C. 122(b) or issuance of a patent pursuant to 35 U.S.C. 151. Further, a record may be disclosed, subject to the limitations of 37 CFR 1.14, as a routine use, to the public if the record was filed in an application which became abandoned or in which the proceedings were terminated and which application is referenced by either a published application, an application open to public inspection or an issued patent.
9. A record from this system of records may be disclosed, as a routine use, to a Federal, State, or local law enforcement agency, if the USPTO becomes aware of a violation or potential violation of law or regulation.

UNITED STATES PATENT AND TRADEMARK OFFICE

COMMISSIONER FOR PATENTS
UNITED STATES PATENT AND TRADEMARK OFFICE
P.O. BOX 1450
ALEXANDRIA, VA 22313-1450
www.uspto.gov
DIW Aug-06

FULWIDER PATTON LEE & UTECHT, LLP
HOWARD HUGHES CENTER
TENTH FLOOR
6060 CENTER DRIVE
LOS ANGELES CA 90045

COPY MAILED

AUG 28 2006

OFFICE OF PETITIONS

In re Application of	:	
Brustein et al.	:	
Application No. 11/076,271	:	DECISION ON PETITION
Filed: 10 March, 2005	:	
Atty Docket No. BRUCO-72134	:	

This is a decision on the petition filed on 6 February, 2006, under 37 CFR 1.137(b),[1] to revive the above-identified application.

The petition is **GRANTED**.

---

[1] Effective December 1, 1997, the provisions of 37 CFR 1.137(b) now provide that where the delay in reply was unintentional, a petition may be filed to revive an abandoned application or a lapsed patent pursuant to 37 CFR 1.137(b). A grantable petition filed under the provisions of 37 CFR 1.137(b) must be accompanied by:

(1) the required reply, unless previously filed. In a nonprovisional application abandoned for failure to prosecute, the required reply may be met by the filing of a continuing application. In a nonprovisional utility or plant application filed on or after June 8, 1995, and abandoned for failure to prosecute, the required reply may also be met by the filing of a request for continuing examination in compliance with § 1.114. In an application or patent, abandoned or lapsed for failure to pay the issue fee or any portion thereof, the required reply must be the payment of the issue fee or any outstanding balance thereof. In an application, abandoned for failure to pay the publication fee, the required reply must include payment of the publication fee.

(2) the petition fee as set forth in 37 CFR 1.17(m);

(3) a statement that the entire delay in filing the required reply from the due date for the reply until the filing of a grantable petition pursuant to 37 CFR 1.137(b) was unintentional. The Commissioner may required additional information where there is a question whether the delay was unintentional; and

(4) any terminal disclaimer (and fee as set forth in 37 CFR 1.20(d)) required pursuant to 37 CFR 1.137(c)).

The application became abandoned on 13 June, 2006, for failure to timely submit a replacement abstract commencing on a separate sheet in response to the Notice to File Corrected Application Papers mailed on 12 April, 2005, which set a two (2) month shortened period for reply. No extensions of time under 37 CFR 1.136(a) were obtained. Notice of Abandonment was mailed on 9 January, 2006.

A replacement abstract has been submitted with the present petition.

This application is being referred to the Office of Initial Patent Examination for further processing.

Telephone inquiries concerning this matter may be directed to the undersigned at (571)272-3231.

D Wood

Douglas I. Wood
Senior Petitions Attorney
Office of Petitions

UNITED STATES PATENT AND TRADEMARK OFFICE

Commissioner for Patents
United States Patent and Trademark Office
P.O. Box 1450
Alexandria, VA 22313-1450
www.uspto.gov

RIMAS LUKAS
2707 18th STREET
SAN FRANCISCO, CA 94110

COPY MAILED

NOV 30 2005

OFFICE OF PETITIONS

In re Application of
Thomas L. Smith, Derek S. Pai,
Steven T. Kunitake, Derrick Richardson and
Jorge Monteon
Application No. 11/076,272
Filed: March 9, 2005
Title: LOW VOLUME FILTRATION
COLUMN DEVICES AND METHODS OF
FILTERING THEREWITH

DECISION REFUSING STATUS
UNDER 37 CFR 1.47(a)

This is in response to the "Petition Under 37 CFR 1.47(a)," filed November 8, 2005.

The petition is dismissed.

Rule 47 applicant is given TWO MONTHS from the mailing date of this decision to reply, correcting the below-noted deficiencies. Any reply should be entitled "Request for Reconsideration of Petition Under 37 CFR 1.47(a)," and should only address the deficiencies noted below, except that the reply may include an oath or declaration executed by the non-signing inventor. **FAILURE TO RESPOND WILL RESULT IN ABANDONMENT OF THE APPLICATION.** Any extensions of time will be governed by 37 CFR 1.136(a).

The above-identified application was filed on March 9, 2005 without an executed oath or declaration and naming Thomas L. Smith, Derek S. Pai, Steven T. Kunitake, Derrick Richardson and Jorge Monteon as joint inventors.

Accordingly, on April 8, 2005, a "Notice to File Missing Parts of Application" was mailed, requiring an executed oath or declaration and a surcharge for its late filing.

In response, on November 8, 2005, the instant petition and a five (5) month extension of time were filed.

A grantable petition under 37 CFR 1.47(a) requires:

> (1) proof that the non-signing inventor cannot be reached or refuses to sign the oath or declaration after having been presented with the application papers (specification, claims and drawings);

(2) an acceptable oath or declaration;

(3) the petition fee; and

(4) a statement of the last known address of the non-signing inventor.

Applicant lacks item (1), as set forth above.

Regarding Non-Signing Inventors Steven T. Kunitake and Jorge Monteon:

As to item (1), applicant appears to demonstrate that the non-signing inventor was only presented with the declaration. Unless the non-signing inventor was presented with a copy of the application papers (specification, claims and drawings), the non-signing inventor could not attest that he has "reviewed and understands the application papers" and therefore could not sign the declaration which he was given. Accordingly, Rule 47 applicant failed to show or provide proof that the inventor has refused to sign the declaration. See MPEP 409.03(d). Petitioner should show that a copy of the application papers was presented to the non-signing inventor, but that he did not respond to, or refused, the request that he sign the oath/declaration in order to show that the inventor has refused to join in the application. The proof of the pertinent events should be made by a statement of someone with first hand knowledge of the events.

Further correspondence with respect to this matter should be addressed as follows:

By mail: Mail Stop Petition
Commissioner for Patents
Box 1450
Alexandria, VA 22313

By FAX: (703) 872-9306
Attn: Office of Petitions

By hand: Customer Service Window
Randolph Building
401 Dulany Street
Alexandria, VA 22314

Telephone inquiries related to this decision should be directed to the undersigned at (571) 272-3228.

Edward J. Tannouse
Petitions Attorney
Office of Petitions
Office of the Deputy Commissioner
for Patent Examination Policy

UNITED STATES PATENT AND TRADEMARK OFFICE

Commissioner for Patents
United States Patent and Trademark Office
P.O. Box 1450
Alexandria, VA 22313-1450
www.uspto.gov

RIMAS LUKAS
2707 18th STREET
SAN FRANCISCO, CA 94110

COPY MAILED

FEB 09 2006

OFFICE OF PETITIONS

In re Application of
Thomas L. Smith, Derek S. Pai,
Steven T. Kunitake, Derrick Richardson and
Jorge Monteon
Application No. 11/076,272
Filed: March 9, 2005
For: LOW VOLUME FILTRATION
COLUMN DEVICES AND METHODS OF
FILTERING THEREWITH

DECISION GRANTING PETITION
UNDER 37 CFR 1.47(a)

This is in response to the "Request For Reconsideration of Petition Under 37 CFR 1.47(a)," filed January 30, 2006.

The petition is **granted**.

Petitioner has shown that the non-signing inventors, Derrick Richardson and Jorge Monteon, have refused to join in the filing of the above-identified application.

The above-identified application and papers have been reviewed and found in compliance with 37 CFR 1.47(a). This application is hereby accorded Rule 1.47(a) status. As provided in Rule 1.47(c), this Office will forward notice of this application's filing to the non-signing inventor at the address given in the petition. Notice of the filing of this application will also be published in the Official Gazette.

The file is being forwarded to Technology Center 1600 for examination *in due course*.

Telephone inquiries regarding this decision should be directed to the undersigned at (571) 272-3228.

Edward J. Tannouse
Petitions Attorney
Office of Petitions
Office of the Deputy Commissioner
for Patent Examination Policy

UNITED STATES PATENT AND TRADEMARK OFFICE

Commissioner for Patents
United States Patent and Trademark Office
P.O. Box 1450
Alexandria, VA 22313-1450
www.uspto.go

DERRICK RICHARDSON
5420 SW 134TH AVE.
MIRAMAR, FL 33027

COPY MAILED

FEB 09 2006

OFFICE OF PETITIONS

In re Application of
Thomas L. Smith, Derek S. Pai,
Steven T. Kunitake, Derrick Richardson
and Jorge Monteon
Application No. 11/076,272
Filed: March 9, 2005
For: LOW VOLUME FILTRATION COLUMN DEVICES
AND METHODS OF FILTERING THEREWITH

Dear DERRICK RICHARDSON:

You are named as a joint inventor in the above identified United States patent application, filed under the provisions of 35 U.S.C. 116 (United States Code), and 37 CFR 1.47(a), Rules of Practice in Patent Cases. Should a patent be granted on the application you will be designated therein as a joint inventor.

As a named inventor you are entitled to inspect any paper in the file wrapper of the application, order copies of all or any part thereof (at a prepaid cost per 37 CFR 1.19) or make your position of record in the application. Alternatively, you may arrange to do any of the preceding through a registered patent attorney or agent presenting written authorization from you. If you care to join the application, counsel of record (see below) would presumably assist you. Joining in the application would entail the filing of an appropriate oath or declaration by you pursuant to 37 CFR 1.63.

Telephone inquiries regarding this communication should be directed to the undersigned at (571) 272-3228. Requests for information regarding your application should be directed to the File Information Unit at (703) 308-2733. Information regarding how to pay for and order a copy of the application, or a specific paper in the application, should be directed to Certification Division at (703) 308-9726 or 1 (800) 972-6382 (outside the Washington D.C. area).

Edward J. Tannouse
Petitions Attorney
Office of Petitions
Office of the Deputy Commissioner
for Patent Examination Policy

RIMAS LUKAS
2707 18th STREET
SAN FRANCISCO, CA 94110

UNITED STATES PATENT AND TRADEMARK OFFICE

Commissioner for Patents
United States Patent and Trademark Office
P.O. Box 1450
Alexandria, VA 22313-1450
www.uspto.go

JORGE MONTEON
1492 SANBORN AVE.
SAN JOSE, CA 95110

COPY MAILED

FEB 09 2006

OFFICE OF PETITIONS

In re Application of
Thomas L. Smith, Derek S. Pai,
Steven T. Kunitake, Derrick Richardson
and Jorge Monteon
Application No. 11/076,272
Filed: March 9, 2005
For: LOW VOLUME FILTRATION COLUMN DEVICES
AND METHODS OF FILTERING THEREWITH

Dear JORGE MONTEON:

You are named as a joint inventor in the above identified United States patent application, filed under the provisions of 35 U.S.C. 116 (United States Code), and 37 CFR 1.47(a), Rules of Practice in Patent Cases. Should a patent be granted on the application you will be designated therein as a joint inventor.

As a named inventor you are entitled to inspect any paper in the file wrapper of the application, order copies of all or any part thereof (at a prepaid cost per 37 CFR 1.19) or make your position of record in the application. Alternatively, you may arrange to do any of the preceding through a registered patent attorney or agent presenting written authorization from you. If you care to join the application, counsel of record (see below) would presumably assist you. Joining in the application would entail the filing of an appropriate oath or declaration by you pursuant to 37 CFR 1.63.

Telephone inquiries regarding this communication should be directed to the undersigned at (571) 272-3228. Requests for information regarding your application should be directed to the File Information Unit at (703) 308-2733. Information regarding how to pay for and order a copy of the application, or a specific paper in the application, should be directed to Certification Division at (703) 308-9726 or 1 (800) 972-6382 (outside the Washington D.C. area).

Edward J. Tannouse
Petitions Attorney
Office of Petitions
Office of the Deputy Commissioner
for Patent Examination Policy

RIMAS LUKAS
2707 18th STREET
SAN FRANCISCO, CA 94110

UNITED STATES PATENT AND TRADEMARK OFFICE

Office of petitions
TTW

Commissioner for Patents
United States Patent and Trademark Office
P.O. Box 1450
Alexandria, VA 22313-1450
www.uspto.go

DERRICK RICHARDSON
5420 SW 134TH AVE.
MIRAMAR, FL 33027

COPY MAILED

FEB 09 2006

OFFICE OF PETITIONS

In re Application of
Thomas L. Smith, Derek S. Pai,
Steven T. Kunitake, Derrick Richardson
and Jorge Monteon
Application No. 11/076,272
Filed: March 9, 2005
For: LOW VOLUME FILTRATION COLUMN DEVICES
AND METHODS OF FILTERING THEREWITH

Dear DERRICK RICHARDSON:

You are named as a joint inventor in the above identified United States patent application, filed under the provisions of 35 U.S.C. 116 (United States Code), and 37 CFR 1.47(a), Rules of Practice in Patent Cases. Should a patent be granted on the application you will be designated therein as a joint inventor.

As a named inventor you are entitled to inspect any paper in the file wrapper of the application, order copies of all or any part thereof (at a prepaid cost per 37 CFR 1.19) or make your position of record in the application. Alternatively, you may arrange to do any of the preceding through a registered patent attorney or agent presenting written authorization from you. If you care to join the application, counsel of record (see below) would presumably assist you. Joining in the application would entail the filing of an appropriate oath or declaration by you pursuant to 37 CFR 1.63.

Telephone inquiries regarding this communication should be directed to the undersigned at (571) 272-3228. Requests for information regarding your application should be directed to the File Information Unit at (703) 308-2733. Information regarding how to pay for and order a copy of the application, or a specific paper in the application, should be directed to Certification Division at (703) 308-9726 or 1 (800) 972-6382 (outside the Washington D.C. area).

Edward J. Tannouse
Petitions Attorney
Office of Petitions
Office of the Deputy Commissioner
for Patent Examination Policy

RIMAS LUKAS
2707 18th STREET
SAN FRANCISCO, CA 94110

UNITED STATES PATENT AND TRADEMARK OFFICE

Commissioner for Patents
United States Patent and Trademark Office
P.O. Box 1450
Alexandria, VA 22313-1450
www.uspto.gov

RIMAS LUKAS
530 JACKSON ST
2ND FLOOR
SAN FRANCISCO CA 94133

COPY MAILED
SEP 2 8 2006
OFFICE OF PETITIONS

In re Application of	:	
Smith, et al.	:	
Application No. 11/076,272	:	DECISION ON PETITION
Filed: March 9, 2005	:	TO WITHDRAW
Attorney Docket No. ARC012003630	:	FROM RECORD
	:	

This is a decision on the Request to Withdraw as attorney or agent of record under 37 C.F.R. § 1.36(b), filed June 20, 2006.

The request is **NOT APPROVED**.

A grantable request to withdraw as attorney/agent of record must be signed by every attorney/agent seeking to withdraw or contain a clear indication that one attorney is signing on behalf of another/others. A request to withdraw will not be approved unless at least 30 (thirty) days would remain between the date of approval and the later of the expiration date of a time to file a response or the expiration date of the maximum time period which can be extended under 37 C.F.R. § 1.136(a).

The Office cannot approve the request at this time since the reasons provided do not meet any of the conditions under the mandatory or permissive categories enumerated in 37 CFR 10.40. Section 10.40 of Title 37 of the Code of Federal Regulation states, "[a] practitioner shall not withdraw from employment in a proceeding before the Office without permission from the Office[.]" More specifically, 37 CFR 10.40 states, "[i]f paragraph (b) of this section is not applicable, a practitioner may not request permission to withdraw in matter pending before the Office unless such request or such withdrawal is" for one the permissive reasons listed in 37 CFR 10.40(c). The reasons set forth in the request, "client asked to transfer files at the request of the assignee", do not meet any the conditions set forth in 37 CFR 10.40.

In order to request or take action in a patent matter, the assignee must establish its ownership of the patent to the satisfaction of the Director. In this regard, a Statement under 37 CFR 3.73(b) must have either: (i) documentary evidence of a chain of title from the original owner to the assignee (*e.g.*, copy of an executed assignment), and a statement affirming that the documentary evidence of the chain of title from the original owner to the assignee was or concurrently is being

submitted for recordation pursuant to § 3.11; or (ii) a statement specifying where documentary evidence of a chain of title from the original owner to the assignee is recorded in the assignment records of the Office (*e.g.*, reel and frame number).

All future communications from the Office will continue to be directed to the above-listed address until otherwise notified by applicant.

Telephone inquiries concerning this decision should be directed to April Wise at 571-272-1642.

April M. Wise
Petitions Examiner
Office of Petitions

cc: FISH & RICHARDSON PC
P.O. BOX 1022
MINNEAPOLIS, MN 55440-1022

UNITED STATES PATENT AND TRADEMARK OFFICE

Commissioner for Patents
United States Patent and Trademark Office
P.O. Box 1450
Alexandria, VA 22313-1450
www.uspto.gov

MAILED

APR 22 2010

OFFICE OF PETITIONS

FISH & RICHARDSON PC
P.O. BOX 1022
MINNEAPOLIS MN 55440-1022

In re Patent No. 7,556,733	: DECISION ON REQUEST
Smith et al.	: FOR
Issue Date: July 7, 2009	: RECONSIDERATION OF
Application No. 11/076,272	: PATENT TERM ADJUSTMENT
Filed: March 9, 2005	: and
Atty Docket No. 14255-044001	: NOTICE OF INTENT TO ISSUE
/ ARC01-2003	: CERTIFICATE OF CORRECTION

This is a decision on the petition filed on September 4, 2009, which is being treated as a petition under 37 CFR 1.705(d) requesting that the patent term adjustment indicated on the above-identified patent be corrected to indicate that the term of the above-identified patent is extended or adjusted by six hundred fifty-two (652) days. This requested correction includes, pursuant to patentees' duty of candor and good faith to the Office, an additional period of reduction of 123 days[1].

The petition to correct the patent term adjustment indicated on the above-identified patent to indicate that the term of the above-identified patent is extended or adjusted by six hundred fifty-two (652) days is **GRANTED**.

The Office acknowledges submission of the $200.00 fee set forth in 37 CFR 1.18(e). No additional fees are required.

The application is being forwarded to the Certificates of Correction Branch for issuance of a certificate of correction. The Office will issue a certificate of correction indicating that the term of the above-identified patent is extended or adjusted by **six hundred fifty-two (652)** days.

---

[1] Patentees disclose that a reply to an April 8, 2005 Notice to File Missing Parts was filed on November 8, 2005. Accordingly, a period of reduction pursuant to 37 CFR 1.704(b) of 123 days will be entered (July 9, 2005 to November 8, 2005).

Telephone inquiries specific to this matter should be directed to the undersigned at (571) 272-3230.

Shirene Willis Brantley

Shirene Willis Brantley
Senior Petitions Attorney
Office of Petitions

Enclosure: Copy of DRAFT Certificate of Correction

UNITED STATES PATENT AND TRADEMARK OFFICE

CERTIFICATE OF CORRECTION

PATENT : 7,556,733 B2

DATED : **July 7, 2009** **DRAFT**

INVENTOR(S) : Thomas L. Smith, et al.

It is certified that error appears in the above-identified patent and that said Letters Patent is hereby
corrected as shown below:

On the cover page,

[*] Notice: Subject to any disclaimer, the term of this patent is extended or adjusted under 35 U.S.C. 154(b) by 290 days

Delete the phrase "by 290 days" and insert – by 652 days--

UNITED STATES PATENT AND TRADEMARK OFFICE

Commissioner for Patents
United States Patent and Trademark Office
P.O. Box 1450
Alexandria, VA 22313-1450
www.uspto.gov

OSHA LIANG, L.L.P.
TWO HOUSTON CENTER
909 FANNIN, SUITE 3500
HOUSTON, TX 77010

COPY MAILED

DEC 03 2008

OFFICE OF PETITIONS

In re Application of	:	
Matthew Ward	:	
Application No. 11/076,273	:	ON PETITION
Filed: March 9, 2005	:	
Attorney Docket No. 05250048001	:	

This is a decision on the petition under 37 CFR 1.137(b), filed on October 24, 2008, to revive the above-identified application.

The instant petition is not signed by an attorney of record. However, in accordance with 37 CFR 1.34(a), the signature of Peter Hsieh appearing on the petition shall constitute a representation to the United States Patent and Trademark Office that he is authorized to represent the particular party on whose behalf he acts.

Additionally, it is not apparent whether the statement of unintentional delay was signed by a person who would have been in a position of knowing that the entire delay in filing the required reply from the due date for the reply until the filing of a grantable petition pursuant to 37 CFR 1.137(b) was unintentional. Nevertheless, in accordance with 37 CFR 10.18, the statement is accepted as constituting a certification of unintentional delay. However, in the event that petitioner has no knowledge that the delay was unintentional, petitioner must make such an inquiry to ascertain that, in fact, the delay was unintentional. If petitioner discovers that the delay was intentional, petitioner must so notify the Office.

The application became abandoned for failure to timely file a proper response to the final Office action mailed February 27, 2008.

The petition satisfies the requirements of 37 CFR 1.137(b) in that petitioner has supplied (1) the reply in the form of a Request for Continued Examination (RCE) under 37 CFR 1.114 with the $405 filing fee and an amendment; (2) the petition fee of $810; and (3) an adequate statement of unintentional delay. Therefore, the petition is **GRANTED**.

If Mr. Hsieh desires to receive future correspondence regarding this application, the appropriate power of attorney or authorization of agent must be submitted. A courtesy copy of this decision is being mailed to petitioner. Nevertheless, all future correspondence regarding this application file will be directed solely to the address of record until otherwise instructed.

This application is being revived for consideration of the RCE filed October 24, 2008.

The application file is being referred to Technology Center Art Unit 3635, for processing of the RCE and for appropriate action by the Examiner in the normal course of business on the amendment submitted in accordance with 37 CFR 1.114.

Telephone inquiries concerning this decision should be directed to the undersigned at (571) 272-3226.

Andrea Smith
Petitions Examiner
Office of Petitions

cc: Peter Hsieh
3350 Scott Boulevard, Bldg. 2
Santa Clara, CA 95054

UNITED STATES PATENT AND TRADEMARK OFFICE

COMMISSIONER FOR PATENTS
UNITED STATES PATENT AND TRADEMARK OFFICE
P.O. BOX 1450
ALEXANDRIA, VA 22313-1450
WWW.USPTO.GOV

Paper No. None

HUNTON & WILLIAMS LLP
Riverfront Plaza, East Tower
951 E. Byrd Street
Richmond VA 23219-4074

COPY MAILED

MAR 12 2007

OFFICE OF PETITIONS

In re Application of Siva M. Mangalam et al. Application No. 11/076,274 Filed: March 9, 2005 Attorney Docket No. 61076.000015 Title: SYSTEM AND METHOD FOR CLOSED LOOP CONTROL OF BOUNDARY LAYER SHEAR STRESS	DECISION ON PETITION UNDER 37 C.F.R. §1.181(A)

This is a decision on the petition under 37 C.F.R. §1.181(a) to withdraw the holding of abandonment, filed on February 5, 2007.

The above-identified application became abandoned for failure to reply in a timely manner to the non-final Office action, mailed July 17, 2006, which set a shortened statutory period for reply of three months. No response was received, and no extensions of time under the provisions of 37 C.F.R. §1.136(a) were requested. Accordingly, the above-identified application became abandoned on October 18, 2006. A notice of abandonment was mailed on January 29, 2007.

With the present petition, Petitioner has asserted that a response was timely filed on October 16, 2006, however Petitioner placed the wrong serial number on this submission - the amendment, the information disclosure statement (IDS), the certificate of mailing, the check, and the postcard each bore the wrong serial number.

Petitioner is reminded that errors such as occurred can result in loss of rights and care must be taken to avoid such.

Petitioner has submitted copies of the response transmittal letter, the amendment, the IDS, the postcard, and a certificate of mailing, and each bears the application number 11/040,181. The electronic file for both 11/076,274 and 11/040,181 have been reviewed, and a copy of this response has not been located. However, it is noted that the return postcard which Petitioner has included with the present petition contains a date stamp of October 16, 2006.

Section 503 of the MPEP, entitled Application Number and Filing Receipt, sets forth, *in pertinent part*:

> RETURN POSTCARD
>
> If a receipt of any item (e.g., paper or fee) filed in the USPTO is desired, it may be obtained by enclosing with the paper a self-addressed postcard specifically identifying the item. The USPTO will stamp the receipt date on the postcard and place it in the outgoing mail. A postcard receipt which itemizes and properly identifies the items which are being filed serves as prima facie evidence of receipt in the USPTO of all the items listed thereon on the date stamped thereon by the USPTO.
>
> The identifying data on the postcard should be so complete as to clearly identify the item for which receipt is requested. For example, the postcard should identify the applicant's name, application number (if known), confirmation number (if known), filing date, interference number, title of the invention, etc. The postcard should also identify the type of paper being filed, e.g., new application, affidavit, amendment, notice of appeal, appeal brief, drawings, fees, motions, supplemental oath or declaration, petition, etc., and the number of pages being submitted. If a new application is being filed, all parts of the application being submitted should be separately listed on the postcard, e.g., the number of pages of specification (including written description, claims and abstract), number of claims, number of sheets of drawings, number of pages of oath/declaration, number of pages of cover sheet (provisional application).
>
> The postcard receipt will not serve as prima facie evidence of receipt of any item which is not adequately itemized on the postcard. For example, merely listing on the postcard "a complete application" or "patent application" will not serve as a proper receipt for each of the required components of an application (e.g., specification (including claims), drawings (if necessary), oath or declaration and the application filing fee) or missing portions (e.g., pages, sheets of drawings) of an application if one of the components or portion of a component is found to be missing by the USPTO. Each separate component should be specifically and properly itemized on the postcard. Furthermore, merely incorporating by reference in the postcard receipt, the

> items listed in a transmittal letter will not serve as prima facie evidence of receipt of those items.
>
> The person receiving the item(s) in the USPTO will check the listing on the postcard against the item(s) being filed to be sure they are properly identified and that all the items listed on the postcard are presently being submitted to the USPTO. If any of the items listed on the postcard are not being submitted to the USPTO, those items will be crossed off and the postcard initialed by the person receiving the items.
>
> Upon return of a postcard receipt from the USPTO, the postcard receipt should be promptly reviewed by the person who filed the items to ensure that every item specifically denoted on the postcard was received by the USPTO. If the postcard receipt has been annotated to indicate that a particular item denoted on the postcard was not received by the USPTO, the postcard receipt will not serve as prima facie evidence of receipt of that item in the USPTO.

The postcard receipt indicates that a response, an IDS, a check, and a certificate of mailing were received in the Office of Initial Patent Examination on October 16, 2006. As such, it is clear that a response was received on that date, and subsequently misplaced in the Office. Considering the facts and circumstances of the delay at issue, as set forth on petition, it is concluded that Petitioner has met his burden of establishing that a response was timely submitted.

Accordingly, the petition under 37 C.F.R. §1.181(a) is **GRANTED**. The holding of abandonment is **WITHDRAWN**. **The present petition does not appear to contain an authorization to charge any deficient fees to a Deposit Account. As such, the fees associated with the filing of additional claims and an IDS have not been received.**

The Technology Center will be notified of this decision. The Technology Center's support staff will notify the Examiner of this decision, so that the amendment which was submitted with the present petition (originally submitted on October 16, 2006) can be processed.

Telephone inquiries regarding *this decision* should be directed to the undersigned at (571) 272-3225. All other inquiries concerning examination procedures or status of the application should be directed to the Technology Center.

Paul Shanoski
Senior Attorney
Office of Petitions
United States Patent and Trademark Office

UNITED STATES PATENT AND TRADEMARK OFFICE

UNITED STATES DEPARTMENT OF COMMERCE
United States Patent and Trademark Office
Address: COMMISSIONER FOR PATENTS
P.O. Box 1450
Alexandria, Virginia 22313-1450
www.uspto.gov

HARNESS, DICKEY & PIERCE, P.L.C.
P.O. BOX 828
BLOOMFIELD HILLS, MI 48303

Mail Date: 04/21/2010

Applicant	: Mitsuo Nakamura	: DECISION ON REQUEST FOR
Patent Number	: 7602477	: RECALCULATION of PATENT
Issue Date	: 10/13/2009	: TERM ADJUSTMENT IN VIEW
Appliction No	: 11/076,294	: OF WYETH AND NOTICE OF INTENT TO
Filed	: 03/09/2005	: ISSUE CERTIFICATE OF CORRECTION
		:

The Request for Recalculation is **GRANTED** to the extent indicated.

The patent term adjustment has been determined to be **670** days. The USPTO will *sua sponte* issue a certificate of correction reflecting the amount of PTA days determined by the recalculation.

Prior to the issuance of the certificate of correction, the USPTO will afford patentee an opportunity to be heard and request reconsideration. Accordingly, patentee has **one month or thirty (30) days**, whichever is longer, to file a request for reconsideration of this patent term adjustment calculation. See 35 U.S.C. 154(b)(3)(B)(ii) and 37 CFR 1.322(a)(4). No extensions of time will be granted under 37 CFR 1.136.

Patentee should use document code PET.OP if electronically filing a request for reconsideration of this patent term adjustment calculation. The patentee must also include the information required by 37 CFR 1.705(b)(2) and the fee required by 37 CFR 1.18(e). If patentee does not file a timely request for reconsideration of this patent term adjustment calculation including the information required by 37 CFR 1.705(b)(2) and the fee required by 37 CFR 1.18(e), the USPTO will issue a certificate of correction reflecting the PTA determination noted above.

Patentee should be aware that in order to preserve the right to review in the United States District Court for the District of Columbia of the USPTO patent term adjustment determination, patentee must ensure that he or she also take the steps required under 35 U.S.C. 154(b)(4)(A) in a timely manner. Nothing in the request for recalculation should be construed as providing an alternative time frame for commencing a civil action under 35 U.S.C. 154(b)(4)(A).

Any questions concerning this decision should be directed to the Office of Patent Legal Administration at 571-272-7702.

UNITED STATES PATENT AND TRADEMARK OFFICE

UNITED STATES DEPARTMENT OF COMMERCE
United States Patent and Trademark Office
Address: COMMISSIONER FOR PATENTS
P.O. Box 1450
Alexandria, Virginia 22313-1450
www.uspto.gov

HARNESS, DICKEY & PIERCE, P.L.C.
P.O. BOX 828
BLOOMFIELD HILLS, MI 48303

Mail Date: 04/21/2010

Applicant	: Mamoru Sawada	: DECISION ON REQUEST FOR
Patent Number	: 7577504	: RECALCULATION of PATENT
Issue Date	: 08/18/2009	: TERM ADJUSTMENT IN VIEW
Appliction No	: 11/076,295	: OF WYETH AND NOTICE OF INTENT TO
Filed	: 03/09/2005	: ISSUE CERTIFICATE OF CORRECTION
		:

The Request for Recalculation is **GRANTED** to the extent indicated.

The patent term adjustment has been determined to be **180** days. The USPTO will *sua sponte* issue a certificate of correction reflecting the amount of PTA days determined by the recalculation.

Prior to the issuance of the certificate of correction, the USPTO will afford patentee an opportunity to be heard and request reconsideration. Accordingly, patentee has **one month or thirty (30) days**, whichever is longer, to file a request for reconsideration of this patent term adjustment calculation. See 35 U.S.C. 154(b)(3)(B)(ii) and 37 CFR 1.322(a)(4). No extensions of time will be granted under 37 CFR 1.136.

Patentee should use document code PET.OP if electronically filing a request for reconsideration of this patent term adjustment calculation. The patentee must also include the information required by 37 CFR 1.705(b)(2) and the fee required by 37 CFR 1.18(e). If patentee does not file a timely request for reconsideration of this patent term adjustment calculation including the information required by 37 CFR 1.705(b)(2) and the fee required by 37 CFR 1.18(e), the USPTO will issue a certificate of correction reflecting the PTA determination noted above.

Patentee should be aware that in order to preserve the right to review in the United States District Court for the District of Columbia of the USPTO patent term adjustment determination, patentee must ensure that he or she also take the steps required under 35 U.S.C. 154(b)(4)(A) in a timely manner. Nothing in the request for recalculation should be construed as providing an alternative time frame for commencing a civil action under 35 U.S.C. 154(b)(4)(A).

Any questions concerning this decision should be directed to the Office of Patent Legal Administration at 571-272-7702.

UNITED STATES PATENT AND TRADEMARK OFFICE

Commissioner for Patents
United States Patent and Trademark Office
P.O. Box 1450
Alexandria, VA 22313-1450
www.uspto.gov

HICKMAN PALERMO TRUONG
& BECKER, LLP
2055 GATEWAY PLACE
SUITE 550
SAN JOSE, CA 95110

COPY MAILED

SEP 28 2007

OFFICE OF PETITIONS

In re Application of

Veronica DiLullo, et al.

Application No. 11/076,318

Filed: March 8, 2005

Attorney Docket No. 60059-0027

DECISION ON PETITION

This is a decision on the petition under 37 CFR 1.137(b), filed December 4, 2006, in the above-identified application.

The petition is **GRANTED**.

A final Office action was mailed in the above-cited application February 24, 2006, which set a shortened statutory period for reply of three (3) months from its mailing date. Extensions of the time set for reply were available pursuant to 37 CFR 1.136(a). A reply was not filed within the allowable period. The application became abandoned on May 25, 2006. A Notice of Abandonment was mailed September 28, 2006.

The Request for Continued Examination, filed December 4, 2006, is noted and made of record.

The request for an extension of time within the third month filed December 4, 2006, is noted but cannot be granted as the request was made outside the maximum statutory period for reply to the final Office action. The amount of $510.00 will be refunded, in due course.

The application is being forwarded to Technology Center 3600, GAU 3644 for further processing.

Telephone inquiries concerning this decision should be directed to the undersigned at (571) 272-3222.

Kenya A. McLaughlin
Petitions Attorney
Office of Petitions

UNITED STATES PATENT AND TRADEMARK OFFICE

Commissioner for Patents
United States Patent and Trademark Office
P.O. Box 1450
Alexandria, VA 22313-1450
www.uspto.gov

Western Digital Technologies, Inc.
20611 Lake Forest Dr. – C205
Lake Forest CA 92630

COPY MAILED

JUL 06 2005

OFFICE OF PETITIONS

In re Application of Li and McCaslin Application No. 11/076,335 Filed: March 9, 2005 Attorney Docket No. K35R1825	: : : : :	DECISION ACCORDING STATUS UNDER 37 CFR 1.47(a)

This is in response to the petition under 37 CFR 1.47(a), filed June 1, 2005.

The petition is granted.

Petitioner has shown that Weijin Li, the non-signing inventor, has refused to join in the filing of the above-identified application after having been presented with the application papers. Specifically, the declaration of facts of Renee M. Franks establishes that the inventor was presented with the application papers, including the specification, claims and drawings, via email but refused the request that he sign the declaration.

The above-identified application and papers have been reviewed and found in compliance with 37 CFR 1.47(a). This application is hereby accorded Rule 1.47(a) status. As provided in Rule 1.47(c), this Office will forward notice of this application's filing to the non-signing inventor at the address given in the present petition. Notice of the filing of this application will also be published in the Official Gazette.

The matter is being referred to the Office of Initial Patent Examination for further processing.

Telephone inquiries regarding this decision should be directed to the undersigned at (571) 272-3211.

Christina Tartera Donnell

Christina Tartera Donnell
Senior Petitions Attorney
Office of Petitions

UNITED STATES PATENT AND TRADEMARK OFFICE

Commissioner for Patents
United States Patent and Trademark Office
P.O. Box 1450
Alexandria, VA 22313-1450
www.uspto.gov

Weijin Li
8016 Marigola Way
El Dorado Hills, CA 95762

COPY MAILED

JUL 0 6 2005

OFFICE OF PETITIONS

In re Application of	:	
Li and McCaslin	:	LETTER
Application No. 11/076,335	:	
Filed: March 9, 2005	:	
Title: Head Gimbal Assembly With Air Bearing	:	
Slider Crown Having Reduced Temperature	:	
Sensitivity	:	
Attorney Docket No. K35R1825	:	

Dear Mr. LI:

You are named as a joint inventor in the above-identified United States patent application filed under the provisions of 35 U.S.C. 116 (United States Code) and 37 CFR 1.47(a), Rules of Practice in Patent Cases. Should a patent be granted on the application you will be designated therein as a joint inventor.

As a named inventor you are entitled to inspect any paper in the file wrapper of the application, order copies of all or any part thereof (at a prepaid cost per 37 CFR 1.19) or make your position of record in the application. Alternatively, you may arrange to do any of the preceding through a registered patent attorney or agent presenting written authorization from you. If you care to join the application, counsel of record (see below) would presumably assist you. Joining in the application would entail the filing of an appropriate oath or declaration by you pursuant to 37 CFR 1.63.

Requests for information regarding your application should be directed to the File Information Unit at (703) 308-2733. Information regarding how to pay for and order a copy of the application, or a specific paper in the application, should be directed to Certification Division at (703) 308-9726 or 1-800-972-6382 (outside the Washington D.C. area).

Christina Tartera Donnell

Christina Tartera Donnell
Senior Petitions Attorney
Office of Petitions

Western Digital Technologies, Inc.
20611 Lake Forest Dr. – C205
Lake Forest CA 92630

EXHIBIT B

COPY OF DECISION TO GRANT THE PETITION UNDER 37 CFR §1.47(a) FILED JUNE 1, 2005

UNITED STATES PATENT AND TRADEMARK OFFICE

Commissioner for Patents
United States Patent and Trademark Office
P.O. Box 1450
Alexandria, VA 22313-1450
www.uspto.gov

Western Digital Technologies, Inc.
20611 Lake Forest Dr. – C205
Lake Forest CA 92630

RECEIVED
JUL 12 2005
BY:

COPY MAILED
JUL 06 2005
OFFICE OF PETITIONS

In re Application of
Li and McCaslin
Application No. 11/076,335
Filed: March 9, 2005
Attorney Docket No. K35R1825

COPY

DECISION ACCORDING STATUS
UNDER 37 CFR 1.47(a)

This is in response to the petition under 37 CFR 1.47(a), filed June 1, 2005.

The petition is granted.

Petitioner has shown that Weijin Li, the non-signing inventor, has refused to join in the filing of the above-identified application after having been presented with the application papers. Specifically, the declaration of facts of Renee M. Franks establishes that the inventor was presented with the application papers, including the specification, claims and drawings, via email but refused the request that he sign the declaration.

The above-identified application and papers have been reviewed and found in compliance with 37 CFR 1.47(a). This application is hereby accorded Rule 1.47(a) status. As provided in Rule 1.47(c), this Office will forward notice of this application's filing to the non-signing inventor at the address given in the present petition. Notice of the filing of this application will also be published in the Official Gazette.

The matter is being referred to the Office of Initial Patent Examination for further processing.

Telephone inquiries regarding this decision should be directed to the undersigned at (571) 272-3211.

Christina Tartera Donnell

Christina Tartera Donnell
Senior Petitions Attorney
Office of Petitions

UNITED STATES PATENT AND TRADEMARK OFFICE

Commissioner for Patents
United States Patent and Trademark Office
P.O. Box 1450
Alexandria, VA 22313-1450
www.uspto.gov

MAIL

JAN 09 2008

DIRECTOR'S OFFICE
TECHNOLOGY CENTER 2600

WESTERN DIGITAL TECHNOLOGIES, INC.
ATTN: RENEE M. QUICK
20511 LAKE FOREST DR.
E-118H
LAKE FOREST CA 92630

In re Application of:
LI, WEIJIN et al
Application Serial No.: 11/076,335
Filed: March 09, 2005
For: **HEAD GIMBAL ASSEMBLY WITH AIR BEARING SLIDER CROWN HAVING REDUCED TEMPERATURE SENSITIVITY**

DECISION
ON PETITION

This is a decision on the petition filed November 28, 2007 under 37 CFR § 1.181, requesting the Commissioner to invoke his supervisory authority and withdraw the finality of the final Office action mailed May 30, 2007 (presumed to mean October 17, 2007).

PERTINENT BACKGROUND

This application was filed March 09, 2005.

A first Office action was issued May 15, 2007 rejecting claims 1- 4, 6-7, and 9-10 under 35 USC 102(b) as being anticipated by Sone et al. Claims 5 and 8 were rejected under 35 USC 103(a) as being unpatentable over Sone et al in view of Budde.

A response to the first Office action was timely filed and received in the Patent and Trademark Office (PTO) on July 27, 2007. Claim 1 was amended to overcome the rejections. Furthermore, claims 5-6 and 9-10 were cancelled.

A second Office action was issued on October 17, 2007 with new grounds of rejection rejecting claims 1-3 and 7 as being unpatentable under 35 USC 102(b) as being anticipated by Coon. Claim 4 was rejected under 35 USC 103(a) as being unpatentable over Coon in view of Sone. Claim 8 was rejected under 35 USC 112 second paragraph, as being indefinite for failing to particularly point out and distinctly claim the subject matter which applicant regards as the invention. The examiner held that the amendment necessitated the new grounds of rejection and made the second Office action Final.

On November 28, 2007, applicant filed an amendment after Final concurrently with the petition to withdraw finality.

Petitioner seeks relief by filing a petition under 37 CFR 1.181 requesting the finality of the Final Office action of October 17, 2007 be withdrawn.

REGULATIONS AND PRACTICE

37 CFR § 1.113(a) states in part that:

> (a) On the second or any subsequent examination or consideration by the examiner the rejection or other action may be made final, whereupon applicant's or patent owner's reply is limited to appeal in the case of rejection of any claim (§ 1.191) or to amendment as specified in § 1.116. ...

MPEP § 706.07(a) states in part that:

> Under present practice, second or any subsequent action on the merits shall be final, except where the examiner introduces a new ground of rejection that is (not) necessitated by applicant's amendment of the claims...

OPINION

Petitioner contends that the new grounds of rejection in the Office action were not necessitated by amendment. Petitioner argues that claim 1 was amended to essentially move a "partially etched" limitation from dependent claim 5 (as originally filed) to independent claim 1. Since the partially etched region was already present in the dependent claims, it was therefore already the subject of examination; moving it to the dependent claim should not have necessitated a new search or a new ground of rejection. Petitioner adds,

> It is not merely theoretically possible or assumed that the "partially etched" limitation was already the subject of search and examination. The record expressly demonstrates that the "partially etched" limitation was actually already searched and considered previously by the examiner, since the non-final office action mailed 15MAY2007 expressly attempts to correct the absence of the partially etched teaching in the Sone reference through combination of the Budde reference (which the office action expressly avers on its page 4 includes teaching of a partially etched region).

A review of the amendment filed June 14, 2004 finds that the attorney did more amending than just moving the "partially etched" limitation from dependent claim 5 to independent claim 1. Claim 5 as originally filed on March 9, 2005 stated:

> 5. The head gimbal assembly of claim 1 wherein said at least one weakening region includes a partially etched region.

Claim 1 as amended on July 27, 2007 states:

> 1. (Currently Amended) A head gimbal assembly, comprising:
> a slider having an air bearing surface opposite a bonding surface, the slider having a leading end and a trailing end separated by a length;
> a gimbal having a tongue including at least one weakening region that extends more in a direction perpendicular to said length than it does in a direction parallel to said length, <u>the weakening region comprising a partially etched</u>

> depression that does not extend completely through the thickness of the tongue, the tongue having a thickness that is less within the partially etched depression than outside of the partially etched depression;
> the bonding surface being attached to the tongue in a first bonding region that extends closer to said leading end than the weakening region does, and in a second bonding region that extends closer to said trailing end than the weakening region does.

The partially etched region of claim 5 has been modified to require the region to be a depression that does not extend completely through the thickness of the tongue, the tongue having a thickness that is less within the partially etched depression than outside of the partially etched depression. This feature was not presented earlier and its addition to claim 1 necessitated changing the grounds of rejection as discussed above. Thus, it is proper under current Office practice to make the second Office action Final as provided for under 37 CFR 1.113 and MPEP 706.07(a).

CONCLUSION

For the above stated reasons, the petition to withdraw the finality of the Final Office action of October 17, 2007 is **DENIED**.

The three month shortened statutory period for response set forth in the Final Office action of October 17, 2007 continues to run. The application is being forwarded to the examiner for consideration of the Amendment After Final filed November 28, 2007.

Andrew Faile

Andrew I. Faile, Director
Technology Center 2600
Communications

UNITED STATES PATENT AND TRADEMARK OFFICE

COMMISSIONER FOR PATENTS
UNITED STATES PATENT AND TRADEMARK OFFICE
P.O. BOX 1450
ALEXANDRIA, VA 22313-1450
www.uspto.gov

JUL 27 2005

In re Application of	:	
Dick T. Kho	:	
Serial No. 11/076,337	:	DECISION ON PETITION
Filed: March 9, 2005	:	TO MAKE SPECIAL
For: EASY PULLING HEAVY LUGGAGE	:	

Applicant's petition, filed March 9, 2005, requests that this application be rendered special for examination in that applicant is over sixty-five (65) years of age.

The petition has been reviewed and is found to be in compliance with the requirements for special status as set forth in Section 708.02(IV) of the Manual of Patent Examining Procedure (MPEP).

PETITION GRANTED.

Richard A. Bertsch, Director
Technology Center 3700

Monty Koslover
145 Via Monte D'Oro
Redondo Beach, CA 90277

UNITED STATES PATENT AND TRADEMARK OFFICE

Commissioner for Patents
United States Patent and Trademark Office
P.O. Box 1450
Alexandria, VA 22313-1450
www.uspto.gov

PHILIP S. JOHNSON
JOHNSON & JOHNSON
ONE JOHNSON & JOHNSON PLAZA
NEW BRUNSWICK NJ 08933-7003

COPY MAILED

NOV 2 1 2005

OFFICE OF PETITIONS

In re Application of	:	
Michael Tokarski, James Peck, Edward Dzwill,	:	DECISION GRANTING STATUS
George Brock, Roger Smith, Michael Schulte and	:	UNDER 37 CFR 1.47(a)
Michael Scott Ulrich	:	
Application No. 11/076,344	:	
Filed: March 9, 2005	:	
Attorney Docket Number: VTN-5031USNP		
Title of Invention: Contact Lens Package		

This is in response to the petition under 37 CFR 1.47(a), filed October 5, 2005.

The petition is GRANTED.

Petitioner has shown that the non-signing inventor has refused to join in the filing of the above-identified application after having been presented with the application papers. The petition attest a copy of the application was sent to non-signing inventor's last known address. The non-signing inventor's failure to respond to the application mailing sufficiently establishes that he refuses to execute the application papers.

The above-identified application and papers have been reviewed and found in compliance with 37 CFR 1.47(a). This application is hereby accorded Rule 1.47(a) status.

As provided in Rule 1.47(c), this Office will forward notice of this application's filing to the non-signing inventor at the address given in the petition. Notice of the filing of this application will also be published in the Official Gazette.

The current petition fee for petitions under 37 CFR 1.47 is $200.00. Accordingly pursuant to petitioner's request deposit account no. 10-0750 will be charged the $70.00 difference.

The address of the non-signing inventor provided on the declaration differs from the last known address provided in the petition. Petitioner is required to submit the address where non-signing inventor receives mail via a declaration or an application data sheet.

This application is being forwarded to the Office of Initial Patent Examination for further processing.

Telephone inquiries related to this decision may be directed to the undersigned at (571) 272-3215.

Charlema R. Grant
Petitions Attorney
Office of Petitions

UNITED STATES PATENT AND TRADEMARK OFFICE

Commissioner for Patents
United States Patent and Trademark Office
P.O. Box 1450
Alexandria, VA 22313-1450
www.uspto.gov

James M. Peck
13301 Maple Knoll Way
Apartment 1406
Maple Grove, MN 55369

COPY MAILED

NOV 2 1 2005

OFFICE OF PETITIONS

In re Application of
Michael Tokarski, James Peck, Edward Dzwill, George Brock, Roger Smith, Michael Schulte and Michael Scott Ulrich
Application No. 11/076,344
Filed: March 9, 2005
Attorney Docket Number: VTN-5031USNP
Title of Invention: Contact Lens Package

LETTER

Dear Mr. Peck:

You are named as a joint inventor in the above-identified United States patent application filed under the provisions of 35 U.S.C. 116 (United States Code) and 37 C.F.R. § 1.47(a), Rules of Practice in Patent Cases. Should a patent be granted on the application you will be designated therein as a joint inventor.

As a named inventor you are entitled to inspect any paper in the file wrapper of the application, order copies of all or any part thereof (at a prepaid cost as per 37 C.F.R. § 1.19) or make your position of record in the application. Alternatively, you may arrange to do any of the preceding through a registered patent attorney or agent presenting written authorization from you. If you care to join the application, attorney or agent (see below) would presumably assist you. Joining in the application would entail the filing of an appropriate oath or declaration by you pursuant to 37 C.F.R. § 1.63.

Telephone inquiries regarding this communication should be directed to Petitions Attorney Charlema R. Grant at (571) 272-3215. Requests for information regarding your application should be directed to the File Information Unit at (703) 308-2733. Information regarding how to pay for and order a copy of the application, or a specific paper in the application, should be directed to Certification Division at (703) 308-9726 or 1-800-972-6382 (outside the Washington D.C. area).

Charlema R Grant

Charlema R. Grant
Petitions Attorney
Office of Petitions

RUBY T. HOPE
JOHNSON & JOHNSON
ONE JOHNSON & JOHNSON PLAZA
NEW BRUNSWICK NJ 08933-7003

cc: James Peck, 13587 Osprey Point, Jacksonville, FL. 32224

UNITED STATES PATENT AND TRADEMARK OFFICE

Commissioner for Patents
United States Patent and Trademark Office
P.O. Box 1450
Alexandria, VA 22313-1450
www.uspto.gov

CATERPILLAR
C/O LIELL, MCNEIL & HARPER
INTELLECTUAL PROPERTY
DEPARTMENT
AH9510
100 N.E. ADAMS
PEORIA IL 61629-9510

COPY MAILED
MAR 16 2010

In re Application of	:	
Shafer, et al.	:	
Application No. 11/076,384	:	DECISION
Filed/Deposited: 9 March, 2005	:	
Attorney Docket No. 04-415	:	

This is a decision on the petition filed on 17 November, 2009, to revive an application pursuant to 37 C.F.R. §1.137(b) as having been abandoned due to unintentional delay.

Petitioner has failed to make a proper statement of unintentional delay.

Nevertheless, such statement is being treated as having been made as the result of a reasonable inquiry into the facts and circumstances of such delay.[1] *In the event that such an inquiry has not been made, Petitioner* ***must*** *make such an inquiry.*

If such inquiry results in the discovery that it is not correct that the entire delay in filing the required reply from the due date for the reply until the filing of a grantable petition pursuant to 37 C.F.R. §1.137(b) was unintentional, Petitioner ***must*** *notify the Office.*

Petitioner will find in the form provided on the Office website all of the elements to track the requirements of a grantable petition pursuant to 37 C.F.R. §1.137(b)—including that of a proper statement of unintentional delay.

[1] See 37 C.F.R. §10.18(b) and Changes to Patent Practice and Procedure; Final Rule Notice, 62 Fed. Reg. 53131, 53178 (October 10, 1997), 1203 Off. Gaz. Pat. Office 63, 103 (October 21, 1997).

The petition pursuant to 37 C.F.R. §1.137(b) is **GRANTED**.

As to the Allegations
of Unintentional Delay

The requirements of a grantable petition pursuant to 37 C.F.R. §1.137(b) are the petition and fee therefor, a reply, a proper statement of unintentional delay under the regulation, and, where applicable, a terminal disclaimer and fee.

Petitioners' attentions always are directed to the guidance in the Commentary at MPEP §711.03(c)(II).

BACKGROUND

The record reflects as follows:

Former Counsel failed to reply timely and properly to the final Office action mailed on 30 April, 2009, with reply due absent an extension of time on or before 30 July, 2009.

On 26 October, 2009, Petitioner filed an amendment after final, which the Examiner refused to enter and Petitioner—as one registered to practice before the Office—knew was not as of right and not a proper reply[2] if it did not *prima facie* place the application in condition for allowance, and on 12 November, 2009, the Examiner mailed an Advisory Action.

The application went abandoned by operation of law after midnight 30 October, 2009.

The Office mailed the Notice of Abandonment 16 November, 2009.

On 17 November, 2009, Petitioner filed, *inter alia*, a petition pursuant to 37 C.F.R. §1.137(b), with fee, but without a proper statement of unintentional delay, and a reply in the form of a request for continued examination (RCE) and fee and a submission under the provisions of 37 C.F.R. §1.114 in the form of an amendment previously filed

The regulations at 37 C.F.R. §1.137(b)(3) require a statement that "the entire delay in filing the required reply from the due date for the reply until the filing of a grantable petition pursuant to 37 C.F.R. §1.137(b) was unintentional." Since the statement appearing in the petition varies from the language required by 37 C.F.R. §1.137(b)(3), the statement is being construed as the required statement. Petitioner ***must*** *notify the Office if this is* ***not*** *a correct reading of the statement appearing in the petition.*

---

[2] A proper reply is an amendment prima facie placing the application in condition for allowance, a Notice of Appeal, or an RCE (with fee and submission under 37 C.F.R. §1.114). (See: MPEP §711.03(c).)

The availability of applications and application papers online to applicants/practitioners who diligently associate their Customer Number with the respective application(s) now provides an applicant/practitioner on-demand information as to events/transactions in an application.

Out of an abundance of caution, Petitioners always are reminded that those registered to practice and all others who make representations before the Office **must** inquire into the underlying facts of representations made to the Office and support averments with the appropriate documentation–since all owe to the Office the continuing duty to disclose.[3]

STATUTES, REGULATIONS AND ANALYSIS

Congress has authorized the Commissioner to "revive an application if the delay is shown to the satisfaction of the Commissioner to have been "unavoidable." 35 U.S.C. §133 (1994).[4]
The regulations at 37 C.F.R. §1.137(a) and (b) set forth the requirements for a Petitioner to revive a previously unavoidably or unintentionally, respectively, abandoned application under this congressional grant of authority.

Unintentional delays are those that do not satisfy the very strict statutory and regulatory requirements of unavoidable delay, and also, by definition, are not intentional.[5]))

As to Allegations of Unintentional Delay

The requirements of a grantable petition pursuant to 37 C.F.R. §1.137(b) are the petition and fee therefor, a reply, a proper statement of unintentional delay under the regulation, and, where applicable, a terminal disclaimer and fee.

It appears that the requirements under the rule have been satisfied.

---

[3] See supplement of 17 June, 1999. The Patent and Trademark Office is relying on petitioner's duty of candor and good faith and accepting a statement made by Petitioner. See Changes to Patent Practice and Procedure, 62 Fed. Reg. at 53160 and 53178, 1203 Off. Gaz. Pat. Office at 88 and 103 (responses to comments 64 and 109)(applicant obligated under 37 C.F.R. §10.18 to inquire into the underlying facts and circumstances when providing statements to the Patent and Trademark Office).

[4] 35 U.S.C. §133 provides:

35 U.S.C. §133 Time for prosecuting application.
Upon failure of the applicant to prosecute the application within six months after any action therein, of which notice has been given or mailed to the applicant, or within such shorter time, not less than thirty days, as fixed by the Commissioner in such action, the application shall be regarded as abandoned by the parties thereto, unless it be shown to the satisfaction of the Commissioner that such delay was unavoidable.

[5] Therefore, by example, an unintentional delay in the reply might occur if the reply and transmittal form are to be prepared for shipment by the US Postal Service, but other pressing matters distract one's attention and the mail is not timely deposited for shipment.

CONCLUSION

Accordingly, the petition pursuant to 37 C.F.R. §1.137(b) is **granted**.

The instant application is released to the Technology Center/AU 3747 for further processing in due course.

Petitioner may find it beneficial to view Private PAIR within a fortnight of the instant decision to ensure that the revival has been acknowledged by the TC/AU in response to this decision. It is noted that all inquiries with regard to that change in status need be directed to the TC/AU where that change of status must be effected—that does not occur in the Office of Petitions.

Telephone inquiries regarding this decision may be directed to the undersigned at (571) 272-3214—it is noted, however, that all practice before the Office is in writing (see: 37 C.F.R. §1.2[6]) and the proper authority for action on any matter in this regard are the statutes (35 U.S.C.), regulations (37 C.F.R.) and the commentary on policy (MPEP). Therefore, no telephone discussion may be controlling or considered authority for Petitioner's action(s).

/John J. Gillon, Jr./
John J. Gillon, Jr.
Senior Attorney
Office of Petitions

---

[6] The regulations at 37 C.F.R. §1.2 provide:

§1.2 Business to be transacted in writing.

All business with the Patent and Trademark Office should be transacted in writing. The personal attendance of applicants or their attorneys or agents at the Patent and Trademark Office is unnecessary. The action of the Patent and Trademark Office will be based exclusively on the written record in the Office. No attention will be paid to any alleged oral promise, stipulation, or understanding in relation to which there is disagreement or doubt.

UNITED STATES PATENT AND TRADEMARK OFFICE

Commissioner for Patents
United States Patent and Trademark Office
P.O. Box 1450
Alexandria, VA 22313-1450
www.uspto.gov

MAILED

AUG 21 2009

OFFICE OF PETITIONS

ROBINS & PASTERNAK
1731 EMBARCADERO ROAD
SUITE 230
PALO ALTO, CA 94303

In re Application of
Stephen Mejza, et al.
Application No. 11/076,393
Filed: March 9, 2005
Attorney Docket No. 0800.0016.02

ON PETITION

This is a decision on the petition, filed January 8, 2009, to revive the above-identified application under 37 CFR 1.137(b).

The petition is GRANTED.

This application became abandoned on December 7, 2008 for failure to timely file a reply within the meaning of 37 CFR 1.113 to the final Office action of June 6, 2008. A Notice of Abandonment was mailed on February 12, 2009. On October 10, 2008 the present petition was filed, along with a Notice of Appeal and fee. It is noted that a Request for Continued Examination (RCE) and a 5 month petition for extension of time were subsequently filed on August 4, 2009. Since the RCE and extension of time were filed while the application was not pending, they are considered improper and will not be processed. The fees paid for the RCE and extension of time are being refunded to counsel's credit card.

The petition satisfies the requirements of 37 CFR 1.137(b) in that petitioner has supplied (1) the reply in the form of a Notice of Appeal and appeal fee of $540; (2) the petition fee of $1,620; and (3) an adequate statement of unintentional delay.

The two-month period for filing an appeal brief under 37 CFR 41.37 (accompanied by the fee required by 37 CFR 41.20(b)(2)), runs from the date of this decision.

This application is being referred to Technology Center AU 1648 to await the filing of an appeal brief or for such other appropriate reply as may be submitted to continue prosecution of the application.

Telephone inquiries concerning this decision may be directed to the undersigned at (571) 272-3204. Inquiries relating to the prosecution of the application should be referred to the Technology Center.

Sherry D. Brinkley
Petitions Examiner
Office of Petitions

UNITED STATES PATENT AND TRADEMARK OFFICE

Commissioner for Patents
United States Patent and Trademark Office
P.O. Box 1450
Alexandria, VA 22313-1450
www.uspto.gov

MDIP LLC
POST OFFICE BOX 2630
MONTGOMERY VILLAGE MD 20886-2630

MAILED

MAY 27 2010

OFFICE OF PETITIONS

In re Application of	:	
Tianci Luo, et al.	:	
Application No. 11/076,399	:	DECISION GRANTING PETITION
Filed: March 8, 2005	:	UNDER 37 CFR 1.313(c)(2)
Attorney Docket No. 010804-22961204	:	

This is a decision on the petition under 37 CFR 1.313(c)(2), filed, May 26, 2010 to withdraw the above-identified application from issue after payment of the issue fee.

The petition is **GRANTED**.

The above-identified application is withdrawn from issue for consideration of a submission under 37 CFR 1.114 (request for continued examination). *See* 37 CFR 1.313(c)(2).

Petitioner is advised that the issue fee paid on May 3, 2010 cannot be refunded. If, however, this application is again allowed, petitioner may request that it be applied towards the issue fee required by the new Notice of Allowance.[1]

Telephone inquiries should be directed to Terri Johnson at (571) 272-2991.

This application is being referred to Technology Center AU 1648 for processing of the request for continued examination under 37 CFR 1.114 and for consideration of the concurrently filed information disclosure statement.

Terri Johnson
Petitions Examiner
Office of Petitions

---

[1] *The request to apply the issue fee to the new Notice may be satisfied by completing and returning the new Part B – Fee(s) Transmittal Form (along with any balance due at the time of submission). Petitioner is advised that the Issue Fee Transmittal Form must be completed and timely submitted to avoid abandonment of the application.*

UNITED STATES PATENT AND TRADEMARK OFFICE

Commissioner for Patents
United States Patent and Trademark Office
P.O. Box 1450
Alexandria, VA 22313-1450
www.uspto.gov

CHRISTOPHER BAKKENIST
1804 PIONEER DRIVE
SEWICKLEY, PA 15143

COPY MAILED
MAR 23 2006
OFFICE OF PETITIONS

In re Application of	:
Michael B. Kastan et al	:
Application No. 11/076,405	: DECISION GRANTING PETITION
Filed: March 9, 2005	: UNDER 37 CFR 1.313(c)(2)
Attorney Docket No. 02427/1201251-US2	:

This is a decision on the petition, filed March 22, 2006, under 37 CFR 1.313(c)(2) to withdraw the above-identified application from issue after payment of the issue fee.

The petition is **GRANTED**.

The above-identified application is withdrawn from issue for consideration of a submission under 37 CFR 1.114 (request for continued examination). See 37 CFR 1.313(c)(2).

Petitioner is advised that the issue fee paid on December 22, 2005 in the above-identified application cannot be refunded. If, however, the above-identified application is again allowed, petitioner may request that it be applied towards the issue fee required by the new Notice of Allowance.[1]

The file does not indicate a change of address has been submitted, although the address given on the petition differs from the address of record. If appropriate, a change of address should be filed in accordance with MPEP 601.03. A courtesy copy of this decision is being mailed to the address appearing on the petition; however, the Office will mail all future correspondence solely to the above address of record.

Telephone inquiries should be directed to the undersigned at (571) 272-3218.

---

[1] *The request to apply the issue fee to the new Notice may be satisfied by completing and returning the new Part B – Fee(s) Transmittal Form (along with any balance due at the time of submission), which includes the following language thereon: "The Director of the USPTO is requested to apply the Issue Fee and Publication Fee (if any) or to re-apply any previously paid issue fee in the application identified above. Petitioner is advised that, whether a fee is indicated as being due or not, the Issue Fee Transmittal Form* ***must*** *be completed and timely submitted to avoid abandonment. Note the language in bold text on the first page of the Notice of Allowance and Fee(s) Due (PTOL-85).*

This matter is being referred to Technology Center AU 1652 for processing of the request for continued examination under 37 CFR 1.114 and for consideration of the concurrently filed amendment and Information Disclosure Statement.

Frances Hicks
Petitions Examiner
Office of Petitions

cc:

Irina F. Vainberg
Darby & Darby PC
P O Box 5257
New York, NY 10150-5257

C:\Documents and Settings\FHicks\My Documents\470\313\076405.wpd

UNITED STATES PATENT AND TRADEMARK OFFICE

UNITED STATES DEPARTMENT OF COMMERCE
United States Patent and Trademark Office
Address: COMMISSIONER FOR PATENTS
P.O. Box 1450
Alexandria, Virginia 22313-1450
www.uspto.gov

SHUMAKER & SIEFFERT, P. A.
1625 RADIO DRIVE
SUITE 300
WOODBURY, MN 55125

Mail Date: 04/20/2010

Applicant	: Kevin W. Werner	: DECISION ON REQUEST FOR
Patent Number	: 7657899	: RECALCULATION of PATENT
Issue Date	: 02/02/2010	: TERM ADJUSTMENT IN VIEW
Appliction No	: 11/076,407	: OF WYETH AND NOTICE OF INTENT TO
Filed	: 03/09/2005	: ISSUE CERTIFICATE OF CORRECTION
		:

The Request for Recalculation is **GRANTED** to the extent indicated.

The patent term adjustment has been determined to be **1303** days. The USPTO will *sua sponte* issue a certificate of correction reflecting the amount of PTA days determined by the recalculation.

Prior to the issuance of the certificate of correction, the USPTO will afford patentee an opportunity to be heard and request reconsideration. Accordingly, patentee has **one month or thirty (30) days**, whichever is longer, to file a request for reconsideration of this patent term adjustment calculation. See 35 U.S.C. 154(b)(3)(B)(ii) and 37 CFR 1.322(a)(4). No extensions of time will be granted under 37 CFR 1.136.

Patentee should use document code PET.OP if electronically filing a request for reconsideration of this patent term adjustment calculation. The patentee must also include the information required by 37 CFR 1.705(b)(2) and the fee required by 37 CFR 1.18(e). If patentee does not file a timely request for reconsideration of this patent term adjustment calculation including the information required by 37 CFR 1.705(b)(2) and the fee required by 37 CFR 1.18(e), the USPTO will issue a certificate of correction reflecting the PTA determination noted above.

Patentee should be aware that in order to preserve the right to review in the United States District Court for the District of Columbia of the USPTO patent term adjustment determination, patentee must ensure that he or she also take the steps required under 35 U.S.C. 154(b)(4)(A) in a timely manner. Nothing in the request for recalculation should be construed as providing an alternative time frame for commencing a civil action under 35 U.S.C. 154(b)(4)(A).

Any questions concerning this decision should be directed to the Office of Patent Legal Administration at 571-272-7702.

UNITED STATES PATENT AND TRADEMARK OFFICE

Commissioner for Patents
United States Patent and Trademark Office
P.O. Box 1450
Alexandria, VA 22313-1450
www.uspto.gov

TOWNSEND AND TOWNSEND AND CREW, LLP
TWO EMBARCADERO CENTER
EIGHTH FLOOR
SAN FRANCISCO, CA 94111-3834

COPY MAILED

SEP 0 4 2007

OFFICE OF PETITIONS

In re Application of	:	
W. Jack Harper	:	
Application No. 11/076,410	:	DECISION ON PETITION
Filed: March 8, 2005	:	TO WITHDRAW
Attorney Docket No. 040172-002300US	:	FROM RECORD
	:	

This is a decision on the Request to Withdraw as attorney or agent of record under 37 C.F.R. § 1.36(b) filed April 20, 2007.

The request is **APPROVED**.

A grantable request to withdraw as attorney/agent of record must be signed by every attorney/agent seeking to withdraw or contain a clear indication that one attorney is signing on behalf of another/others. A request to withdraw will not be approved unless at least 30 (thirty) days would remain between the date of approval and the later of the expiration date of a time to file a response or the expiration date of the maximum time period which can be extended under 37 C.F.R. § 1.136(a).

The request was signed by William F. Vobach on behalf of all attorneys of record who are associated with customer No. 20350.

All attorneys/agents associated with the Customer Number 20350 have been withdrawn.

Applicant is reminded that there is no attorney of record at this time.

The correspondence address of record has been changed and the new correspondence address is the address indicated below.

There are no pending Office actions at the present time.

Telephone inquiries concerning this decision should be directed to undersigned at 571-27-1642.

April M. Wise
Petitions Examiner
Office of Petitions

cc: BSI2000, INC.
1153 BERGEN PARKWAY
SUITE M350
EVERGREEN, CO 80439

UNITED STATES PATENT AND TRADEMARK OFFICE

UNITED STATES DEPARTMENT OF COMMERCE
United States Patent and Trademark Office
Address: COMMISSIONER FOR PATENTS
P.O. Box 1450
Alexandria, Virginia 22313-1450
www.uspto.gov

APPLICATION NUMBER	FILING OR 371 (c) DATE	FIRST NAMED APPLICANT	ATTY. DOCKET NO./TITLE
11/076,410	03/08/2005	W. Jack Harper	040172-002300US

CONFIRMATION NO. 2338

OC000000025656721

20350
TOWNSEND AND TOWNSEND AND CREW, LLP
TWO EMBARCADERO CENTER
EIGHTH FLOOR
SAN FRANCISCO, CA 94111-3834

Date Mailed: 09/04/2007

NOTICE REGARDING CHANGE OF POWER OF ATTORNEY

This is in response to the Power of Attorney filed 04/20/2007.

- The withdrawal as attorney in this application has been accepted. Future correspondence will be mailed to the new address of record. 37 CFR 1.33.

Office of Initial Patent Examination (571) 272-4000, or 1-800-PTO-9199
FORMER ATTORNEY/AGENT COPY

UNITED STATES PATENT AND TRADEMARK OFFICE

Commissioner for Patents
United States Patent and Trademark Office
P.O. Box 1450
Alexandria, VA 22313-1450
www.uspto.gov

TRELLIS INTELLECTUAL PROPERTY LAW GROUP, PC
1900 EMBARCADERO ROAD
SUITE 109
PALO ALTO CA 94303

MAILED

MAY 05 2009

OFFICE OF PETITIONS

In re Application of
HARTUNG, Steven F. et al.
Application No. 11/076,447
Filed: March 08, 2005
Attorney Docket No. **100112-001020US**

DECISION ON PETITION TO WITHDRAW FROM RECORD

This is a decision on the Request to Withdraw as attorney or agent of record under 37 C.F.R. § 1.36(b), filed December 12, 2008.

The request is **APPROVED**.

A grantable request to withdraw as attorney/agent of record must be signed by every attorney/agent seeking to withdraw or contain a clear indication that one attorney is signing on behalf of another/others. The Office requires the practitioner(s) requesting withdrawal to certify that he, she, or they have: (1) given reasonable notice to the client, prior to the expiration of the response period, that the practitioner(s) intends to withdraw from employment; (2) delivered to the client or a duly authorized representative of the client all papers and property (including funds) to which the client is entitled; and (3) notified the client of any responses that may be due and the time frame within which the client must respond, pursuant 37 CFR 10.40(c).

The request was signed by Charles Kulas on behalf of all attorneys of record who are associated with customer No. 37490. All attorneys/agents associated with the Customer Number 37490 have been withdrawn. Applicant is reminded that there is no attorney of record at this time.

The request to change the correspondence address of record is not acceptable as the requested correspondence address is not that of: (1) the first named signing inventor; or (2) an intervening assignee of the entire interest under 37 C.F.R 3.71. All future communications from the Office will be directed to the first named signing inventor at the first copied address below until otherwise properly notified by the applicant.

There is an outstanding Office action mailed January 27, 2009 that requires a reply from the applicant.

Telephone inquiries concerning this decision should be directed to Tredelle Jackson at 571-272-2783.

Tredelle D. Jackson
Paralegal Specialist
Office of Petitions

cc: **STEVEN F. HARTNG**
6868 TWIN LAKE ROAD
BOULDER CO 80301-3860

cc: **COPAN SYSTEMS INC.**
1900 PIKE ROAD, UNIT A
LONGMONT CO 80501

UNITED STATES PATENT AND TRADEMARK OFFICE

Commissioner for Patents
United States Patent and Trademark Office
P.O. Box 1450
Alexandria, VA 22313-1450
www.uspto.gov

DEPARTMENT OF THE NAVY
OFFICE OF COUNSEL
3824 STRAUSS AVE., SUITE 103
INDIAN HEAD, MD 20640-5152

COPY MAILED

FEB 01 2008

OFFICE OF PETITIONS

In re Application of	:	
Harry L. Archer et al	:	
Application No. 11/076,456	:	ON PETITION
Filed: March 3, 2005	:	
Attorney Docket No. 96,666	:	

This is a decision on the petition under 37 CFR 1.137(b), filed October 9, 2007, to revive the above-identified application.

The petition is **GRANTED**.

The above-identified application became abandoned for failure to reply in a timely manner to the non-final Office action mailed April 4, 2007, which set a shortened statutory period for reply of three (3) months. No extension of time under the provisions of 37 CFR 1.136(a) were obtained. Accordingly, the above-identified application became abandoned on July 5, 2007.

Telephone inquiries concerning this decision should be directed to Irvin Dingle at (571) 272-3210.

This matter is being referred to Technology Center AU 1794 for further processing.

Irvin Dingle
Petitions Examiner
Office of Petitions

OIPE
APR 18 2005
PATENT & TRADEMARK OFFICE

CERTIFICATE OF MAILING

I hereby certify that this correspondence is being deposited with the United States Postal Service as first class mail in an envelope, with sufficient postage, addressed to: Commissioner for Patents, Alexandria, VA 22313-1450, on

April 15, 2005
Date of Deposit

Henry L. Brinks, Reg. No. 17,013
Name of Applicant, Assignee or Registered Representative

Signature

April 15, 2005
Date of Signature

Our Case No.: 4921/172

IN THE UNITED STATES PATENT AND TRADEMARK OFFICE

In re Application of:

Barnard Stewart Silver

Serial No.: 11/076,480

Filing Date: March 9, 2005

For: COMPOSITIONS OF FRUCTOSE AND GLUCOSE CONTAINING INULIN

Examiner: To Be Assigned

Group Art Unit No.: To Be Assigned 1761

PETITION FOR ADVANCEMENT OF EXAMINATION UNDER 37 C.F.R. § 1.102(c)

Commissioner for Patents
Alexandria, VA 22313-1450

Dear Sir:

Barnard S. Silver, Applicant, through the undersigned, hereby requests advancement of examination of the above entitled patent application based on

PETITION GRANTED

William Krynski
Special Program Examiner
Technology Center 1700
MAY 29 2007

UNITED STATES PATENT AND TRADEMARK OFFICE

Commissioner for Patents
United States Patent and Trademark Office
P.O. Box 1450
Alexandria, VA 22313-1450
www.uspto.gov

BRINKS HOFER GILSON & LIONE
P.O. BOX 10395
CHICAGO IL 60610

COPY MAILED
MAR 09 2010

In re Patent No. 7,585,536	:
Barnard S. Silver	: DECISION ON REQUEST FOR
Issue Date: September 8, 2009	: RECONSIDERATION OF
Application No. 11/076,480	: PATENT TERM ADJUSTMENT
Filed: March 9, 2005	: AND NOTICE OF INTENT
Attorney Docket No. 4921/172	: TO ISSUE CERTIFICATE OF
Title: COMPOSITIONS OF FRUCTOSE	: CORRECTION
AND GLUCOSE CONTAINING INULIN	:

This is a decision on the petition filed on November 4, 2009, which is being treated as a petition under 37 CFR 1.705(d) requesting that the patent term adjustment indicated on the above-identified patent be corrected to indicate that the term of the above-identified patent is extended or adjusted by two hundred seventy-nine (279) days.

The petition to correct the patent term adjustment indicated on the above-identified patent to indicate that the term of the above-identified patent is extended or adjusted by two hundred seventy-eight (278) days is **GRANTED to the extent indicated herein.**

As the period from the filing date of the request for continued examination (RCE) to the issue date of the patent is not included in the "B" delay period, the over three year period begins on March 10, 2008 and ends on June 26, 2008, the day before the RCE was filed, and is 109 days. See 35 U.S.C. 154(b)(1)(B)(i). As such, the patent term adjustment is 278, not 279 days.

The Office will *sua sponte* issue a certificate of correction. Pursuant to 37 CFR 1.322, the Office will not issue a certificate of correction without first providing assignee or patentee an opportunity to be heard. Accordingly, patentees are given **one (1) month or thirty (30) days,** whichever is longer, from the mail date of this decision to respond. No extensions of time will be granted under § 1.136.

The application is being forwarded to the Certificates of Branch for issuance of a certificate of correction. The Office will issue a certificate of correction indicating that the term of the above-identified patent is extended or adjusted by **two hundred seventy-eight (278)** days.

Telephone inquiries specific to this matter should be directed to Petitions Attorney, Charlema Grant at (571) 272-3215.

/Kery A. Fries/

Kery Fries
Senior Legal Advisor Attorney
Office of Patent Legal Administration
Office of Deputy Commissioner
For Patent Examination Policy

Enclosure: Copy of DRAFT Certificate of Correction

UNITED STATES PATENT AND TRADEMARK OFFICE

CERTIFICATE OF CORRECTION

PATENT : 7,585,536 B2

DATED : **September 8, 2009** **DRAFT**

INVENTOR(S) : Barnard S. Silver

It is certified that error appears in the above-identified patent and that said Letters Patent is hereby corrected as shown below:

On the cover page,

[*] Notice: Subject to any disclaimer, the term of this patent is extended or adjusted under 35 USC 154(b) by 169 days

Delete the phrase "by 169 days" and insert – by 278 days--

UNITED STATES PATENT AND TRADEMARK OFFICE

UNITED STATES DEPARTMENT OF COMMERCE
United States Patent and Trademark Office
Address: COMMISSIONER FOR PATENTS
P.O. Box 1450
Alexandria, Virginia 22313-1450
www.uspto.gov

BRINKS HOFER GILSON & LIONE
P.O. BOX 10395
CHICAGO, IL 60610

Mail Date: 04/21/2010

Applicant	: Barnard S. Silver	: DECISION ON REQUEST FOR
Patent Number	: 7585536	: RECALCULATION of PATENT
Issue Date	: 09/08/2009	: TERM ADJUSTMENT IN VIEW
Appliction No	: 11/076,480	: OF WYETH AND NOTICE OF INTENT TO
Filed	: 03/09/2005	: ISSUE CERTIFICATE OF CORRECTION
		:

The Request for Recalculation is **GRANTED** to the extent indicated.

The patent term adjustment has been determined to be **278** days. The USPTO will *sua sponte* issue a certificate of correction reflecting the amount of PTA days determined by the recalculation.

Prior to the issuance of the certificate of correction, the USPTO will afford patentee an opportunity to be heard and request reconsideration. Accordingly, patentee has **one month or thirty (30) days**, whichever is longer, to file a request for reconsideration of this patent term adjustment calculation. See 35 U.S.C. 154(b)(3)(B)(ii) and 37 CFR 1.322(a)(4). No extensions of time will be granted under 37 CFR 1.136.

Patentee should use document code PET.OP if electronically filing a request for reconsideration of this patent term adjustment calculation. The patentee must also include the information required by 37 CFR 1.705(b)(2) and the fee required by 37 CFR 1.18(e). If patentee does not file a timely request for reconsideration of this patent term adjustment calculation including the information required by 37 CFR 1.705(b)(2) and the fee required by 37 CFR 1.18(e), the USPTO will issue a certificate of correction reflecting the PTA determination noted above.

Patentee should be aware that in order to preserve the right to review in the United States District Court for the District of Columbia of the USPTO patent term adjustment determination, patentee must ensure that he or she also take the steps required under 35 U.S.C. 154(b)(4)(A) in a timely manner. Nothing in the request for recalculation should be construed as providing an alternative time frame for commencing a civil action under 35 U.S.C. 154(b)(4)(A).

Any questions concerning this decision should be directed to the Office of Patent Legal Administration at 571-272-7702.

UNITED STATES PATENT AND TRADEMARK OFFICE

COMMISSIONER FOR PATENTS
UNITED STATES PATENT AND TRADEMARK OFFICE
P.O. BOX 1450
ALEXANDRIA, VA 22313-1450
www.uspto.gov

PATENT COUNSEL
APPLIED MATERIALS, INC.
Legal Affairs Department
P.O. BOX 450A
Santa Clara CA 95052

COPY MAILED

SEP 19 2007

OFFICE OF PETITIONS

In re Application of :
Alon Litman et al :
Application No. 11/076,483 : ON PETITION
Filed: 9 March 2005 :
Attorney Docket No. 6317P114 :

This is a decision on the petition under 37 CFR 1.137(b), filed March 27, 2007 to revive the above-identified application.

The petition is **GRANTED**.

The application became abandoned for failure s to timely pay the issue and publication fee on or before March 12, 2007, as required by the Notice of Allowance and Fee(s) Due, mailed December 11, 2006, which set a statutory period for reply of three (3) months. Accordingly, the application became abandoned on March 13, 2007.

The petition satisfies the requirements of 37 CFR 1.137(b) in that petitioner has supplied (1) the reply in the form of payment of the Issue Fee of $1400.00 and the Publication fee of $300.00, (2) the petition fee of $1500.00; and (3) a statement of unintentional delay. Accordingly, the Issue Fee and Publication payments are accepted as having been unintentionally delayed.

It is not apparent whether the person signing the statement of unintentional delay was in a position to have firsthand or direct knowledge of the facts and circumstances of the delay at issue. Nevertheless, such statement is being treated as having been made as the result of a reasonable inquiry into the facts and circumstances of such delay. See 37 CFR 10.18(b) and Changes to Patent Practice and Procedure; Final Rule Notice, 62 Fed. Reg. 53131, 53178 (October 10, 1997), 1203 Off. Gaz. Pat. Office 63, 103 (October 21, 1997). In the event that such an inquiry has not been made, petitioner must make such an inquiry. If such inquiry results in the discovery that it is not correct that the entire delay in filing the required reply from the due date for the reply until the filing of a grantable petition pursuant to 37 CFR 1.137(b) was unintentional, petitioner must notify the Office.

Telephone inquiries concerning this decision should be directed to Charles Smoot at (571) 272-3299, or in his absence the undersigned at (571) 272-7099.

The application file is being referred to the Publishing Division to be processed into a patent.

David Bucci
Petitions Examiner
Office of Petitions

UNITED STATES PATENT AND TRADEMARK OFFICE

UNITED STATES DEPARTMENT OF COMMERCE
United States Patent and Trademark Office
Address: COMMISSIONER FOR PATENTS
P.O. Box 1450
Alexandria, Virginia 22313-1450
www.uspto.gov

APPLICATION NO.	FILING DATE	FIRST NAMED INVENTOR	ATTORNEY DOCKET NO.	CONFIRMATION NO.
11/076,495	03/10/2005	Mark Pavlansky		4738

7590 12/17/2008

Charles Y. Lackey
PO Box 5871
Winston-Salem, NC 27113-5871

EXAMINER
TOLIN, MICHAEL A

ART UNIT	PAPER NUMBER
1791	

MAIL DATE	DELIVERY MODE
12/17/2008	PAPER

Please find below and/or attached an Office communication concerning this application or proceeding.

The time period for reply, if any, is set in the attached communication.

UNITED STATES PATENT AND TRADEMARK OFFICE

Commissioner for Patents
United States Patent and Trademark Office
P.O. Box 1450
Alexandria, VA 22313-1450
www.uspto.gov

Mailed: 12/17/08

In re application of	:	
Mark Pavlansky	:	DECISION ON
Serial No. 11/076,495	:	PETITION
Filed: March 10, 2005	:	
For: Polyolefin Closure Strip and Method for Making	:	

This is a decision on PETITION TO RESET TIME FOR RESPONSE TO NOTICE REQUIRING EXCESS CLAIMS FEES filed October 15, 2008 and being treated as a petition filed under 37 CFR 1.181 (no fee).

DECISION

Petitioner requests that period for response be reset because the notice was sent to current address of record and did not reflect the change in power of attorney and change of address that was submitted on April 5, 2007. A review of the records indicates that the request was never acted on by the office and that there was extensive prosecution of the current application with correspondence sent to the current address of record. The change in power of attorney and address becomes effective on the date it is granted by the office. The notice of excess fees was sent to the correct address of record at the time.

The petition is **DISMISSED**.

Jacqueline M. Stone

Jacqueline M. Stone,
Director Technology Center 1700
Chemical and Materials Engineering

Robert W. Pitts
PO BOX 1483
Winston-Salem, NC 27116-1483

UNITED STATES PATENT AND TRADEMARK OFFICE

COMMISSIONER FOR PATENTS
UNITED STATES PATENT AND TRADEMARK OFFICE
P.O. BOX 1450
ALEXANDRIA, VA 22313-1450
www.uspto.gov

BELL, BOYD, & LLOYD LLC
P. O. BOX 1135
CHICAGO, IL 60690-1135

COPY MAILED

SEP 14 2005

OFFICE OF PETITIONS

In re Application of :
Luo et al. :
Application No. 11/076,498 : DECISION
Filed: March 8, 2005 : ON PETITION
For: TISSUE PAPER DISPENSER :

This is a decision on the Petition to Withdraw Notice of Omitted Items in a Nonprovisional Application, filed August 5, 2005.

The petition is granted.

The application was filed on March 8, 2005. On June 13, 2005, the Office of Initial Patent Examination mailed a Notice of Omitted Item(s) in a Nonprovisional Application (hereinafter "Notice") stating that the application had been accorded a filing date; however, pages 1-4 of the specification appeared to have been omitted from the application.

Applicant responds with the instant petition wherein Applicant avers that pages 1-4 of the specification were among 55 pages of specification originally filed with the application on March 8, 2005, and were received by this Office as evidenced by the return-receipt postcard. In support of this assertion, Applicant provides a copy of his return-receipt postcard acknowledging receipt of, *inter alia*, 55 pages of specification in the above-identified application by this Office on March 8, 2005.

A review of the return-receipt postcards reveals that Applicant is correct. The postcards acknowledge receipt of, *inter alia*, 55 pages of application in the above-identified application by this Office on March 8, 2005. Applicant has also re-filed pages 1-4 of the specification.

"A postcard receipt which itemizes and properly identifies the papers which are being filed serves as prima facie evidence of receipt in the PTO of all items listed thereon by the PTO." MPEP § 503.

Accordingly, the petition is granted.

Because the petition is granted based upon Applicant's return-receipt postcard, there is no need to reach the issue of incorporation by reference.

The copy of pages 1-4 of the specification, filed with the instant petition on August 5, 2005, will be used for examination purposes.

No petition fee has been charged and none is due.

The application will be returned to the Office of Initial Patent Examination for further processing with a filing date of March 8, 2005, and an indication that pages 1-4 of the specification were included among 55 pages of specification (46 pages of specification, 8 pages of claims and 1 page of abstract), filed on March 8, 2005, using pages 1-4 of the specification filed with the instant petition on August 5, 2005.

Telephone inquiries concerning this matter should be directed to the undersigned at (571) 272-3232.

Derek L. Woods
Attorney
Office of Petitions

UNITED STATES PATENT AND TRADEMARK OFFICE

Commissioner for Patents
United States Patent and Trademark Office
P.O. Box 1450
Alexandria, VA 22313-1450
www.uspto.gov

JUN 21 2005

WILSON SONSINI GOODRICH & ROSATI
650 PAGE MILL ROAD
PALO ALTO CA 94304-1050

In re Application of	:
Daniel Henry Traynor et al.	:
Serial No.: 11/076,507	: PETITION TO MAKE SPECIAL
Filed: March 8, 2005	:
Attorney Docket No.: 31689-706.201	:

This is in response to applicants' petition filed April 05, 2005, to make the above-identified application special under the provisions of 37 CFR 1.102(c), based on the age of the applicant. No fee is required for this petition.

Applicants have satisfied the provisions set forth in M.P.E.P. 708.02, IV. Therefore, the petition is **GRANTED**.

The application will be forwarded to the examiner for action on the merits commensurate with this decision.

Should there be any questions with regard to this letter please contact William R. Dixon, Jr. by letter addressed to the Director, Technology Center 1600, PO BOX 1450, ALEXANDRIA, VA 22313-1450, or by telephone at 571-272-0519 or by facsimile transmission to the general Office facsimile number.

William R. Dixon, Jr.
Special Program Examiner
Technology Center 1600

UNITED STATES PATENT AND TRADEMARK OFFICE

Commissioner for Patents
United States Patent and Trademark Office
P.O. Box 1450
Alexandria, VA 22313-1450
www.uspto.gov

Laurence H. Pretty
28th Floor
633 West Fifth Street
Los Angeles, CA 90071

COPY MAILED

SEP 2 4 2008

OFFICE OF PETITIONS

In re Application of	
Hassan H. Hamza	
Application No. 11/076,513	DECISION ON PETITION
Filed: March 8, 2005	TO WITHDRAW
Attorney Docket No. HAMZA-46457	FROM RECORD

This is a decision on the Request to Withdraw as attorney or agent of record under 37 C.F.R. § 1.36(b), filed August 18, 2008.

The request is **moot because a revocation of power of attorney has been previously filed**.

A review of the file record indicates that the power of attorney to Laurence H. Pretty and all attorneys/agents of record has been revoked by the applicant of the patent application on September 2, 2008. Accordingly, the request to withdraw under 37 C.F.R. § 1.36(b) is moot.

All future communications from the Office will continue to be directed to the below-listed address until otherwise notified by applicant.

Telephone inquires concerning this decision should be directed to Kimberly Inabinet at 571-272-4618.

Kimberly Inabinet
Petitions Examiner
Office of Petitions

cc: Kelly, Lowry & Kelley, LLP
6320 Canoga Avenue
Suite 1650
Woodland Hills, CA 91367

UNITED STATES PATENT AND TRADEMARK OFFICE

UNITED STATES DEPARTMENT OF COMMERCE
United States Patent and Trademark Office
Address: COMMISSIONER FOR PATENTS
P.O. Box 1450
Alexandria, Virginia 22313-1450
www.uspto.gov

APPLICATION NUMBER	FILING OR 371(C) DATE	FIRST NAMED APPLICANT	ATTY. DOCKET NO./TITLE
11/076,513	03/08/2005	Hassan H. Hamza	HAMZA-46457

CONFIRMATION NO. 3991

POWER OF ATTORNEY NOTICE

Laurence H. Pretty
28th Floor
633 West Fifth Street
Los Angeles, CA 90071

OC000000032222094

Date Mailed: 09/23/2008

NOTICE REGARDING CHANGE OF POWER OF ATTORNEY

This is in response to the Power of Attorney filed 09/02/2008.

- The Power of Attorney to you in this application has been revoked by the applicant. Future correspondence will be mailed to the new address of record(37 CFR 1.33).

/kainabinet/

Office of Data Management, Application Assistance Unit (571) 272-4000, or (571) 272-4200, or 1-888-786-0101

UNITED STATES PATENT AND TRADEMARK OFFICE

JUL 13 2005

Commissioner for Patents
United States Patent and Trademark Office
P.O. Box 1450
Alexandria, VA 22313-1450
www.uspto.gov

WILSON SONSINI GOODRICH & ROSATI
650 PAGE MILL ROAD
PALO ALTO CA 94304-1050

In re Application of	:	
Traynor, et al	:	
Serial No.: 11/076,517	:	PETITION TO MAKE SPECIAL
Filed: March 8, 2005	:	
Attorney Docket No.: 31689-704.201	:	

This is in response to applicant's petition filed on 05 April 2005, to make the above-identified application special under the provisions 37 CFR 1,102(c), based on the age of applicant. The delay in acting upon this petition is regretted.

Applicant has satisfied the provisions set forth in M.P.E.P. 708.02, IV. Therefore the petition is **GRANTED**.

The application will be forwarded to the examiner for action on the merits commensurate with this decision.

Should there by any questions with regard to this letter please contact Julie Burke by letter addressed to the Director, Technology Center 1600, P.O. Box 1450, ALEXANDRIA, VA 22313-1450, or by telephone at 572-272-0512 or by facsimile transmission to the general Office facsimile number.

Marianne Seidel
Special Program Examiner
Technology Center 1600

UNITED STATES PATENT AND TRADEMARK OFFICE

UNITED STATES DEPARTMENT OF COMMERCE
United States Patent and Trademark Office
Address: COMMISSIONER FOR PATENTS
P.O. Box 1450
Alexandria, Virginia 22313-1450
www.uspto.gov

SIEMENS CORPORATION
INTELLECTUAL PROPERTY DEPARTMENT
170 WOOD AVENUE SOUTH
ISELIN, NJ 08830

Mail Date: 05/07/2010

Applicant	: Jan Boese	: DECISION ON REQUEST FOR
Patent Number	: 7657069	: RECALCULATION of PATENT
Issue Date	: 02/02/2010	: TERM ADJUSTMENT IN VIEW
Application No	: 11/076,537	: OF WYETH AND NOTICE OF INTENT TO
Filed	: 03/08/2005	: ISSUE CERTIFICATE OF CORRECTION

The Request for Recalculation is **GRANTED** to the extent indicated.

The patent term adjustment has been determined to be **982** days. The USPTO will *sua sponte* issue a certificate of correction reflecting the amount of PTA days determined by the recalculation.

Prior to the issuance of the certificate of correction, the USPTO will afford patentee an opportunity to be heard and request reconsideration. Accordingly, patentee has **one month or thirty (30) days**, whichever is longer, to file a request for reconsideration of this patent term adjustment calculation. See 35 U.S.C. 154(b)(3)(B)(ii) and 37 CFR 1.322(a)(4). No extensions of time will be granted under 37 CFR 1.136.

Patentee should use document code PET.OP if electronically filing a request for reconsideration of this patent term adjustment calculation. The patentee must also include the information required by 37 CFR 1.705(b)(2) and the fee required by 37 CFR 1.18(e). If patentee does not file a timely request for reconsideration of this patent term adjustment calculation including the information required by 37 CFR 1.705(b)(2) and the fee required by 37 CFR 1.18(e), the USPTO will issue a certificate of correction reflecting the PTA determination noted above.

Patentee should be aware that in order to preserve the right to review in the United States District Court for the District of Columbia of the USPTO patent term adjustment determination, patentee must ensure that he or she also take the steps required under 35 U.S.C. 154(b)(4)(A) in a timely manner. Nothing in the request for recalculation should be construed as providing an alternative time frame for commencing a civil action under 35 U.S.C. 154(b)(4)(A).

Any questions concerning this decision should be directed to the Office of Patent Legal Administration at 571-272-7702.

UNITED STATES PATENT AND TRADEMARK OFFICE

COPY MAILED

AUG 30 2006

OFFICE OF PETITIONS

Commissioner for Patents
United States Patent and Trademark Office
P.O. Box 1450
Alexandria, VA 22313-1450
www.uspto.gov

SCULLY SCOTT MURPHY & PRESSER, PC
400 GARDEN CITY PLAZA
SUITE 300
GARDEN CITY NY 11530

COPY MAILED

CANCELLED

AUG 29 2006

OFFICE OF PETITIONS

In re Application of	:	
Gang Xu, et al.	:	
Application No. 11/076,548	:	ON PETITION
Filed: March 9, 2005	:	
Attorney's Docket No. 17520(LFS5031)	:	

This is a decision on the petition filed April 25, 2006 under 37 CFR 1.137(b)[1], to revive the above-identified application.

The petition is **GRANTED**.

The instant application became abandoned on June 9, 2005, for failure to timely reply to the Notice to File Missing Parts, mailed April 8, 2005, which set a two (2) month shortened statutory period for reply. No extensions of the time for reply in accordance with 37 CFR 1.136(a) were obtained prior to the expiration of the period for reply. Accordingly, a Notice of Abandonment was mailed January 9, 2006.

The submission of the oath or declaration and late filing fee, as required by the Notice to File Missing Parts mailed April 8, 2005 is acknowledged.

Additionally, the record reveals that a four month extension of time was filed with the instant petition, however, pursuant to 37 CFR 1.136, an extension of time must be filed prior to the expiration of the maximum period obtainable for reply to avoid abandonment. Accordingly, since the $1590.00 extension of time fee submitted with the petition on April 25, 2006 was subsequent to the maximum period obtainable for reply, this fee is unnecessary and will be credited to counsel's deposit account no. 10-0750.

---

[1] Effective December 1, 1997, the provisions of 37 CFR 1.137(b) now provide that where the delay in reply was unintentional, a petition may be filed to revive an abandoned application or a lapsed patent pursuant to 37 CFR 1.137(b). A grantable petition filed under the provisions of 37 CFR 1.137(b) must be accompanied by:

(1) the required reply, unless previously filed. In a nonprovisional application abandoned for failure to prosecute, the required reply may be met by the filing of a continuing application. In an application or patent, abandoned or lapsed for failure to pay the issue fee or any portion thereof, the required reply must be the payment of the issue fee or any outstanding balance thereof.

(2) the petition fee as set forth in 37 CFR 1.17(m);

(3) a statement that the entire delay in filing the required reply from the due date for the reply until the filing of a grantable petition pursuant to 37 CFR 1.137(b) was unintentional. The Commissioner may required additional information where there is a question whether the delay was unintentional; and

(4) any terminal disclaimer (and fee as set forth in 37 CFR 1.20(d)) required pursuant to 37 CFR 1.137(c)).

All other requirements having been met , this application is being forwarded to the Office of Initial Patent Examination for further pre-examination processing.

Telephone inquiries concerning this matter may be directed to the undersigned Petitions Attorney at (571) 272-3212.

Patricia Faison-Ball

Patricia Faison-Ball
Senior Petitions Attorney
Office of Petitions

Electronic Patent Application Fee Transmittal

Application Number:	11076548
Filing Date:	09-Mar-2005
Title of Invention:	Methods for generating insulin-producing cells
First Named Inventor:	Gang Xu
Filer:	Mark R. Warfield
Attorney Docket Number:	17520 (LFS5031)

Filed as Large Entity

Utility Filing Fees

Description	Fee Code	Quantity	Amount	Sub-Total in USD($)
Basic Filing:				
Pages:				
Claims:				
Miscellaneous-Filing:				
Late filing fee or oath or declaration	1051	1	130	130
Petition:				
Petition-revive unintent. abandoned appl	1453	1	1500	1500
Patent-Appeals-and-Interference:				
Post-Allowance-and-Post-Issuance:				

Description	Fee Code	Quantity	Amount	Sub-Total in USD($)
Extension-of-Time:				
Extension - 4 months with $0 paid	1254	1	1590	1590
Miscellaneous:				
		Total in USD ($)		**3220**

DOCKET NO. LFS5031USNP

IN THE UNITED STATES PATENT AND TRADEMARK OFFICE

Applicants: Gang Xu et al

Serial No.: 11/076,548 Art Unit: 1653

Filed : 03/09/2005 Examiner:

For : METHODS FOR GENERATING INSULIN-PRODUCING CELLS

Commissioner For Patents
P.O. Box 1450
Alexandria, VA 22313-1450

PETITION FOR EXTENSION OF TIME
AND AUTHORIZATION TO CHARGE
DEPOSIT ACCOUNT THEREFOR

Dear Sir:

Applicant(s) petition(s) the Commissioner of Patents and Trademarks to extend the time for response to the Office Action dated 04/08/2005 for four(4) month(s) from 06/08/2005 to 10/08/2005. An Amendment responding to the aforesaid Office Action is being filed concurrently herewith.

Please charge Deposit Account No. 10-0750/LFS5031USNP the sum of $1,590.00 in the name of Johnson & Johnson for the cost of filing this Petition. Three copies of this Petition are enclosed.

Respectfully submitted,

/Mark R Warfield/

Mark R. Warfield
Reg. No. 33,463
Attorney for Applicant(s)

Johnson & Johnson
One Johnson & Johnson Plaza
New Brunswick, NJ 08933-7003
(732) 524-2796
DATE: 04/25/2006

Electronic Acknowledgement Receipt

EFS ID:	1030297
Application Number:	11076548
Confirmation Number:	9892
Title of Invention:	Methods for generating insulin-producing cells
First Named Inventor:	Gang Xu
Customer Number:	23389
Filer:	Mark R. Warfield
Filer Authorized By:	
Attorney Docket Number:	17520 (LFS5031)
Receipt Date:	25-APR-2006
Filing Date:	09-MAR-2005
Time Stamp:	10:47:58
Application Type:	Utility
International Application Number:	

Payment information:

Submitted with Payment	yes
Payment was successfully received in RAM	$3220.0
RAM confirmation Number	450
Deposit Account	100750
The Director of the USPTO is hereby authorized to charge indicated fees and credit any overpayment as follows: Charge any Additional Fees required under 37 C.F.R. Section 1.16 and 1.17	

File Listing:

Document Number	Document Description	File Name	File Size(Bytes)	Multi Part	Pages
1	Petition for review by the Office of Petitions.	LFS5031PetRev.pdf	254404	no	2
Warnings:					
Information:					
2	Extension of Time	LFS5031PET.pdf	122723	no	1
Warnings:					
Information:					
3	Transmittal letter	LFS5031SubDec.pdf	64590	no	1
Warnings:					
Information:					
4	Oath or Declaration filed	LFS5031Dec.pdf	300551	no	6
Warnings:					
Information:					
5	Fee Worksheet (PTO-875)	fee-info.pdf	8433	no	2
Warnings:					
Information:					
		Total Files Size (in bytes):	750701		

This Acknowledgement Receipt evidences receipt on the noted date by the USPTO of the indicated documents, characterized by the applicant, and including page counts, where applicable. It serves as evidence of receipt similar to a Post Card, as described in MPEP 503.

New Applications Under 35 U.S.C. 111
If a new application is being filed and the application includes the necessary components for a filing date (see 37 CFR 1.53(b)-(d) and MPEP 506), a Filing Receipt (37 CFR 1.54) will be issued in due course and the date shown on this Acknowledgement Receipt will establish the filing date of the application.

National Stage of an International Application under 35 U.S.C. 371
If a timely submission to enter the national stage of an international application is compliant with the conditions of 35 U.S.C. 371 and other applicable requirements a Form PCT/DO/EO/903 indicating acceptance of the application as a national stage submission under 35 U.S.C. 371 will be issued in addition to the Filing Receipt, in due course.

OIPE IAP35
NOV 29 2005
PATENT & TRADEMARK OFFICE

Docket No.: 112903.142 US3

IN THE UNITED STATES PATENT AND TRADEMARK OFFICE
PATENT OFFICE

In re Application of: Gozdz et al.

Serial No.: 11/076,556 Group Art Unit: 1745

Filed: March 9, 2005 Examiner: TBA

Title: **LITHIUM SECONDARY CELL WITH HIGH CHARGE AND DISCHARGE RATE CAPABILITY**

Commissioner for Patents
P.O. Box 1450
Alexandria, VA 22313-1450

PETITION TO MAKE SPECIAL

Applicants request that this application be made special and taken out of order on the grounds that this invention will "materially...enhance the quality of the environment." 37 C.F.R. §1.102(c)(2)(i). MPEP Section 708.02 V. Environmental Quality. provides that the U.S. Patent Office will accord special status to all patent applications that materially enhance the quality of the environment by contributing to the restoration or maintenance of the basic life-sustaining natural elements such as air, water or soil.

Alternatively, Applicants request that this application be made special and taken out of order on the grounds that this invention will "materially...contribute to the development or conservation of energy resources." 37 C.F.R. §1.102(c)(2)(ii). MPEP Section 708.02 V. Energy. provides that the U.S. Patent Office will accord special status to all patent applications that materially contribute to the discovery or development of energy resources or the more efficient utilization and conservation of energy resources.

PETITION GRANTED

William Krynski
Special Program Examiner
TC1700

UNITED STATES PATENT AND TRADEMARK OFFICE

Commissioner for Patents
United States Patent and Trademark Office
P.O. Box 1450
Alexandria, VA 22313-1450
www.uspto.gov

Angenehm Law Firm, Ltd.
P.O. Box 48755
Coon Rapids MN 55448-0755

COPY MAILED

OCT 05 2007

OFFICE OF PETITIONS

In re Application of :
Soffer AVIV :
Application No. 11/076,558 : DECISION ON PETITION
Filed: March 8, 2005 :
Attorney Docket No. :
S309-002-PAT

This is a decision on the petition under the unintentional provisions of 37 CFR 1.137(b), filed February 28, 2007, to revive the above-identified application.

The petition is **DISMISSED**.

Any request for reconsideration of this decision must be submitted within TWO (2) MONTHS from the mail date of this decision. Extensions of time under 37 CFR 1.136(a) are permitted. The reconsideration request should include a cover letter entitled "Renewed Petition under 37 CFR 1.137(b)." This is **not** a final agency action within the meaning of 5 U.S.C. § 704.

The application became abandoned for failure to reply in a timely manner to the Notice to File Missing Parts of Nonprovisional Application (Notice), mailed April 22, 2005, which required the submission of claim fees in the amount of $450. The Notice set a period for reply of two (2) months from the mail date of the Notice. No extensions of time were obtained under the provisions of 37 CFR 1.136(a). Accordingly, the application became abandoned on June 23, 2005. A Notice of Abandonment was mailed on September 21, 2006.

A grantable petition under 37 CFR 1.137(b) must be accompanied by: (1) the required reply, unless previously filed; (2) the petition fee as set forth in 37 CFR 1.17(m); (3) a statement that the entire delay in filing the required reply from the due date for the reply until the filing of a grantable petition pursuant to 37 CFR 1.137(b) was unintentional; and (4) any terminal disclaimer (and fee as set forth in 37 CFR 1.20(d)) required by

37 CFR 1.137(d). Where there is a question as to whether either the abandonment or the delay in filing a petition under 37 CFR 1.137 was unintentional, the Director may require additional information. *See* MPEP 711.03(c)(II)(C) and (D). The instant petition lacks item (1).

The Notice of April 22, 2005 stated that $300 was the fee amount for 4 independent claims over 3, which fee was incorrectly calculated. In this regard, the fee for an independent claim is $100 for each independent claim in excess of 3. Therefore, as this application has 4 claims in excess of 3, then the fee due is 4 x $100, which equals $400. Therefore, the $300 fee submitted for the independent claims was deficient by $100. Accordingly, before revival of this application can be effected, a $100 additional claim fee is due. The Office sincerely apologizes for any inconvenience caused applicant in this matter.

The $100 additional independent claim fee must accompany a Renewed Petition Under 37 CFR 1.137(b) and must be filed within two months from the mail date of this decision, as noted above. No additional petition fee is due.

Further correspondence with respect to this matter should be addressed as follows:

By Mail: Mail Stop PETITION
Commissioner for Patents
P. O. Box 1450
Alexandria, VA 22313-1450

By hand: U. S. Patent and Trademark Office
Customer Service Window, Mail Stop Petitions
Randolph Building
401 Dulany Street
Alexandria, VA 22314

The centralized facsimile number is **(571) 273-8300.**

Correspondence regarding this decision may also be filed through the electronic filing system of the USPTO.

To expedite consideration, petitioner may wish to contact the undersigned regarding the filing of the renewed petition under 37 CFR 1.137(b).

Telephone inquiries concerning this decision should be directed to the undersigned at (571) 272-3218.

Frances Hicks
Petitions Examiner
Office of Petitions

UNITED STATES PATENT AND TRADEMARK OFFICE

Commissioner for Patents
United States Patent and Trademark Office
P.O. Box 1450
Alexandria, VA 22313-1450
www.uspto.gov

WOLF, BLOCK, SHORR AND SOLIS-COHEN LLP
250 PARK AVENUE
10TH FLOOR
NEW YORK NY 10177

COPY MAILED

JAN 14 2008

OFFICE OF PETITIONS

In re Application of	:	
Soffer Aviv	:	
Application No. 11/076,558	:	ON PETITION
Filed: March 8, 2005	:	
Attorney Docket No. GOL616.248697	:	

This is a decision on the renewed petition under 37 CFR 1.137(b), filed November 19, 2007, to revive the above-identified application.

The petition is **GRANTED**.

The above-identified application became abandoned for failure to provide the required additional claim fees in a timely manner in reply to the Notice to File Missing Parts of Nonprovisional Application mailed April 22, 2005, which set a shortened statutory period for reply of two (2) months. Accordingly, by operation of law, the above-identified application became abandoned on June 23, 2005.

The petition satisfies the conditions for revival pursuant to the provisions of 37 CFR 1.137(b) in that (1) the reply in the form of the additional claim fees; (2) the petition fee of $750; and (3) the required statement of unintentional delay have been received. Accordingly, the claim fee is accepted as having been unintentionally delayed.

Telephone inquiries concerning this decision should be directed to Carl Friedman at (571) 272-6842.

The application file is being referred to Technology Center Art Unit 2841 for appropriate action on the merits.

David Bucci
Petitions Examiner
Office of Petitions

UNITED STATES PATENT AND TRADEMARK OFFICE

Commissioner for Patents
United States Patent and Trademark Office
P.O. Box 1450
Alexandria, VA 22313-1450
www.uspto.gov

MORRISON & FOERSTER, LLP
555 WEST FIFTH STREET, SUITE 3500
LOS ANGELES, CA 90013-1024

COPY MAILED

FEB 1 8 2009

OFFICE OF PETITIONS

In re Application of	:	
Guy T. **ROME, et al.**	:	
Application No. 11/076,564	:	DECISION ON PETITION TO
Filed: March 8, 2005	:	WITHDRAW FROM RECORD
Attorney Docket No. **480062003820**	:	

This is a decision on the Request to Withdraw as attorney or agent of record under 37 C.F.R. § 1.36(b), filed May 5, 2008.

The request is **NOT APPROVED** as moot.

A review of the file record indicates that the power of attorney to Glenn M. Kubota of **MORRISON & FOESTER, LLP** has been revoked by the assignee of the patent application on July 10, 2008. Accordingly, the request to withdraw under 37 C.F.R. § 1.36(b) is moot.

All future communications from the Office will continue to be directed to the below-listed address until otherwise notified by applicant.

Telephone inquires concerning this decision should be directed to the undersigned at 571-272-7253.

/Monica A. Graves/
Petitions Examiner, Office of Petitions

cc: **RUTAN & TUCKER, LLP.**
611 ANTON BLVD, SUITE 1400
COSTA MESA CA 92626

UNITED STATES PATENT AND TRADEMARK OFFICE

Commissioner for Patents
United States Patent and Trademark Office
P.O. Box 1450
Alexandria, VA 22313-1450
www.uspto.gov

JUL 20 2005

ERIC WITT
650 PAGE MILL ROAD
PALO ALTO, CALIFORNIA 94304-1050

In re Application of	:
DANIEL HENRY TRAYNOR, et al.	:
Serial No.: 11/076,565	: PETITION TO MAKE SPECIAL
Filed: 08 MARCH 2005	:
Attorney Docket No 31689-702.201	:

This is in response to applicants' petition filed September 16, 2004, to make the above-identified application special under the provisions of 37 CFR 1.102(c), based on the age of the applicant.

Applicant has satisfied the provisions set forth in M.P.E.P. 708.02, IV. Therefor the petition is **GRANTED**.

The application will be forwarded to the examiner for action on the merits commensurate with this decision.

Should there be any questions with regard to this letter please contact William R. Dixon, Jr. by letter addressed to the Director, Technology Center 1600, PO BOX 1450, ALEXANDRIA, VA 22313-1450, or by telephone at 571-272-0519 or by facsimile transmission to the general Office facsimile number, (571) 273-8300.

William R. Dixon, Jr.
Special Program Examiner
Technology Center 1600

SPE RESPONSE FOR CERTIFICATE OF CORRECTION

Paper No.: _____

DATE : 10/21/09

TO SPE OF : ART UNIT 3661

SUBJECT : Request for Certificate of Correction for Appl. No.: 11076570 Patent No.: 7502687

Please respond to this request for a certificate of correction within 7 days.

FOR IFW FILES:

Please review the requested changes/corrections as shown in the **COCIN** document(s) in the IFW application image. No new matter should be introduced, nor should the scope or meaning of the claims be changed.

Please complete the response (see below) and forward the completed response to scanning using document code **COCX**.

FOR PAPER FILES:

Please review the requested changes/corrections as shown in the attached certificate of correction. Please complete this form (see below) and forward it with the file to:

Certificates of Correction Branch (C of C)
Randolph Square 9C62-D
Palm Location 7580

You can fax the Directors/SPE response to 571-270-9990

Lamonte Newsome

Certificates of Correction Branch

703-756-1574

Thank You For Your Assistance

The request for issuing the above-identified correction(s) is hereby:

Note your decision on the appropriate box.

xApproved	**All** changes apply.
☐ **Approved in Part**	Specify below which changes **do not** apply.
☐ **Denied**	State the reasons for denial below.

Comments: All requested corrections would be made because USPTO created these minor typo errors when publishing. /CHN/

SPE RESPONSE FOR CERTIFICATE OF CORRECTION

/Thomas G. Black/ 3661

SPE Art Unit

SPE RESPONSE FOR CERTIFICATE OF CORRECTION

Paper No.: _____

DATE : 10/21/09

TO SPE OF : ART UNIT 3661

SUBJECT : Request for Certificate of Correction for Appl. No.: 11076570 Patent No.: 7502687

Please respond to this request for a certificate of correction within 7 days.

FOR IFW FILES:

Please review the requested changes/corrections as shown in the **COCIN** document(s) in the IFW application image. No new matter should be introduced, nor should the scope or meaning of the claims be changed.

Please complete the response (see below) and forward the completed response to scanning using document code **COCX**.

FOR PAPER FILES:

Please review the requested changes/corrections as shown in the attached certificate of correction. Please complete this form (see below) and forward it with the file to:

Certificates of Correction Branch (C of C)
Randolph Square 9C62-D
Palm Location 7580

You can fax the Directors/SPE response to 571-270-9990

Lamonte Newsome
Certificates of Correction Branch
703-756-1574

Thank You For Your Assistance

The request for issuing the above-identified correction(s) is hereby:
Note your decision on the appropriate box.

- ☑ **Approved** — **All** changes apply.
- ☐ **Approved in Part** — Specify below which changes **do not** apply.
- ☐ **Denied** — State the reasons for denial below.

Comments: All requested corrections would be made because USPTO created these minor typo errors when publishing. /CHN/

SPE RESPONSE FOR CERTIFICATE OF CORRECTION

3661

Deleted: _____

SPE

Art Unit

APPROVED
By CUONG H NGUYEN at 3:25 pm, Oct 21, 2009

IN THE UNITED STATES PATENT AND TRADEMARK OFFICE

In Re U.S. Patent No. **US 7,502,687 B2** **FLICK** Issued: **MARCH 10, 2009** Confirmation No.: **6163** For: **VEHICLE TRACKER INCLUDING INPUT/ OUTPUT FEATURES AND RELATED METHODS**	Atty. Docket No. **58106CON4**

REQUEST FOR CERTIFICATE OF CORRECTION OF OFFICE MISTAKE UNDER RULE 1.322(a)

EFILED
Commissioner for Patents

Sir:

In accordance with the provisions of Rule 1.322(a) of the Rules of Practice, the Patent Office is respectfully requested to correct matters in the above-identified patent in accordance with the Certificate of Correction Form PTO-1050 attached hereto.

The Patent Office is requested to issue a Certificate of Correction on the above-referenced Patent Document, and to place such a Certificate of Correction in the file, so that such will appear on any copies of the patent, which are ordered in the future.

The corrections being made are of consequence to provide the proper recitation in the specification. Moreover, since these errors are believed to be errors of the Patent Office, such changes should be made at no expense to the Patentee. No new matter is added by these corrections.

In re Patent of
FLICK
Patent No. **US 7,502,687 B2**
Issued: **MARCH 10, 2009**
_____/

Please charge any shortage in fees due in connection with the filing of this paper to Deposit Account No. **01-0484** and please credit any excess fees to such deposit account.

Respectfully submitted,

/CHRISTOPHER F. REGAN/
CHRISTOPHER F. REGAN
Reg. No. 34,906

CUSTOMER NO. 27975

Telephone No. 407-841-2330 Date: 28 July 2009

UNITED STATES PATENT AND TRADEMARK OFFICE

CERTIFICATE OF CORRECTION

PATENT NO.	:	US 7,502,687 B2
DATED	:	Mar. 10, 2009
INVENTOR(S)	:	Kenneth E. Flick

It is certified that error appears in the above-identified patent and that said Letters Patent are hereby corrected as shown below

Column 4, Line 21	Delete: " embodiments of " Insert: -- embodiments. Of --
Column 6, Line 12	Delete: " the.control- " Insert: -- the control- --
Column 11, Line 43	Delete: " electable " Insert: -- selectable --
Column 14, Line 58	Delete: " alerts. "D" " Insert: -- alerts "D" --
Column 19, Line 57	Delete: " is:turned " Insert: -- is turned --

APPROVED
By CUONG H NGUYEN at 3:26 pm, Oct 21, 2009

MAILING ADDRESS OF SENDER:
Christopher F. Regan

CUSTOMER NO. 27975
PHONE : (407) 841-2330

PATENT NO. US 7,502,687 B2

UNITED STATES PATENT AND TRADEMARK OFFICE

Commissioner for Patents
United States Patent and Trademark Office
P.O. Box 1450
Alexandria, VA 22313-1450
www.uspto.gov

STEPHEN B. DAVIS
BRISTOL-MYERS SQUIBB COMPANY
PATENT DEPARTMENT
P.O. BOX 4000
PRINCETON, NJ 08543-4000

COPY MAILED

SEP 1 5 2005

OFFICE OF PETITIONS

In re Application of	:	
Zhenrog Guo	:	
Application No. 11/076,589	:	ON PETITION
Filed: March 9, 2005	:	
Attorney Docket No. LD0214 REI	:	

This is a decision on the petition under 37 CFR 1.10(c), filed May 9, 2005, requesting that the above-identified application be accorded a filing date of March 9, 2005.

The United States Patent and Trademark Office records indicate that the presently accorded filing date of the above-identified application is March 9, 2005. Therefore, the petition involves a moot issue.

A replacement filing receipt is enclosed for petitioner's records.

Accordingly, the petition is dismissed.

Telephone inquiries concerning this matter may be directed to the undersigned at (571) 272-3228.

Edward J. Tannouse
Petitions Attorney
Office of Petitions
Office of the Deputy Commissioner
for Patent Examination Policy

Attachment: Replacement filing receipt

UNITED STATES PATENT AND TRADEMARK OFFICE

UNITED STATES DEPARTMENT OF COMMERCE
United States Patent and Trademark Office
Address: COMMISSIONER FOR PATENTS
P.O. Box 1450
Alexandria, Virginia 22313-1450
www.uspto.gov

APPL NO.	FILING OR 371 (c) DATE	ART UNIT	FIL FEE REC'D	ATTY.DOCKET NO	DRAWINGS	TOT CLMS	IND CLMS
11/076,591	03/10/2005	2157	500	ROCK1180-1	2	3	1

CONFIRMATION NO. 6350

CORRECTED FILING RECEIPT

OC000000015759083

44654
SPRINKLE IP LAW GROUP
1301 W. 25TH STREET
SUITE 408
AUSTIN, TX 78705

Date Mailed: 04/15/2005

Receipt is acknowledged of this regular Patent Application. It will be considered in its order and you will be notified as to the results of the examination. Be sure to provide the U.S. APPLICATION NUMBER, FILING DATE, NAME OF APPLICANT, and TITLE OF INVENTION when inquiring about this application. Fees transmitted by check or draft are subject to collection. Please verify the accuracy of the data presented on this receipt. **If an error is noted on this Filing Receipt, please mail to the Commissioner for Patents P.O. Box 1450 Alexandria Va 22313-1450. Please provide a copy of this Filing Receipt with the changes noted thereon. If you received a "Notice to File Missing Parts" for this application, please submit any corrections to this Filing Receipt with your reply to the Notice. When the USPTO processes the reply to the Notice, the USPTO will generate another Filing Receipt incorporating the requested corrections (if appropriate).**

Applicant(s)

Patrick Turley, Austin, TX;
Keith Johnston, Austin, TX;
Steven D. Tonnesen, Cedar Park, TX;

Power of Attorney: The patent practitioners associated with Customer Number **44654**.

Domestic Priority data as claimed by applicant

Foreign Applications

If Required, Foreign Filing License Granted: 04/04/2005

The country code and number of your priority application, to be used for filing abroad under the Paris Convention, is US11/076,591

Projected Publication Date: 09/14/2006

Non-Publication Request: No

Early Publication Request: No

**** SMALL ENTITY ****

BEST AVAILABLE COPY

Title

Method and system for controlling network access

Preliminary Class

709

LICENSE FOR FOREIGN FILING UNDER
Title 35, United States Code, Section 184
Title 37, Code of Federal Regulations, 5.11 & 5.15

GRANTED

The applicant has been granted a license under 35 U.S.C. 184, if the phrase "IF REQUIRED, FOREIGN FILING LICENSE GRANTED" followed by a date appears on this form. Such licenses are issued in all applications where the conditions for issuance of a license have been met, regardless of whether or not a license may be required as set forth in 37 CFR 5.15. The scope and limitations of this license are set forth in 37 CFR 5.15(a) unless an earlier license has been issued under 37 CFR 5.15(b). The license is subject to revocation upon written notification. The date indicated is the effective date of the license, unless an earlier license of similar scope has been granted under 37 CFR 5.13 or 5.14.

This license is to be retained by the licensee and may be used at any time on or after the effective date thereof unless it is revoked. This license is automatically transferred to any related applications(s) filed under 37 CFR 1.53(d). This license is not retroactive.

The grant of a license does not in any way lessen the responsibility of a licensee for the security of the subject matter as imposed by any Government contract or the provisions of existing laws relating to espionage and the national security or the export of technical data. Licensees should apprise themselves of current regulations especially with respect to certain countries, of other agencies, particularly the Office of Defense Trade Controls, Department of State (with respect to Arms, Munitions and Implements of War (22 CFR 121-128)); the Office of Export Administration, Department of Commerce (15 CFR 370.10 (j)); the Office of Foreign Assets Control, Department of Treasury (31 CFR Parts 500+) and the Department of Energy.

NOT GRANTED

No license under 35 U.S.C. 184 has been granted at this time, if the phrase "IF REQUIRED, FOREIGN FILING LICENSE GRANTED" DOES NOT appear on this form. Applicant may still petition for a license under 37 CFR 5.12, if a license is desired before the expiration of 6 months from the filing date of the application. If 6 months has lapsed from the filing date of this application and the licensee has not received any indication of a secrecy order under 35 U.S.C. 181, the licensee may foreign file the application pursuant to 37 CFR 5.15(b).

UNITED STATES PATENT AND TRADEMARK OFFICE

Commissioner for Patents
United States Patent and Trademark Office
P.O. Box 1450
Alexandria, VA 22313-1450
www.uspto.gov

Vernon R. Yancy, Esq.
Law Offices of Park and Associates
3600 Wilshire Blvd., Suite 1722
Los Angeles, CA 90010

COPY MAILED
NOV 0 2 2006
OFFICE OF PETITIONS

In re Application of	:	
CHO, et al.	:	
Application No. 11/076,616	:	DECISION ON PETITION
Filed: March 10, 2005	:	TO WITHDRAW
Attorney Docket No. 1802.24	:	FROM RECORD
	:	

This is a decision on the Request to Withdraw as attorney or agent of record under 37 C.F.R. § 1.36(b), filed June 28, 2005.

The request is **NOT APPROVED** as moot.

A review of the file record indicates that the power of attorney to LAW OFFICES OF PARK AND ASSOCIATES has been revoked by the applicant of the patent application on March 07, 2006. Accordingly, the request to withdraw under 37 C.F.R. § 1.36(b) is moot.

All future communications from the Office will continue to be directed to the below-listed address until otherwise notified by applicant.

Telephone inquires concerning this decision should be directed to Patricia Volpe at (571) 272-6825.

PAVolpe

Patricia A. Volpe
Petitions Examiner
Office of Petitions

cc: PARK LAW FIRM
3255 WILSHIRE BLVD
SUITE 1110
LOS ANGELES CA 90010

UNITED STATES PATENT AND TRADEMARK OFFICE

UNITED STATES DEPARTMENT OF COMMERCE
United States Patent and Trademark Office
Address: COMMISSIONER FOR PATENTS
P.O. Box 1450
Alexandria, Virginia 22313-1450
www.uspto.gov

APPLICATION NUMBER	FILING OR 371 (c) DATE	FIRST NAMED APPLICANT	ATTY. DOCKET NO./TITLE
11/076,616	03/10/2005	Gyoung Il Cho	1802.24

CONFIRMATION NO. 5042

OC000000021072073

Vernon R. Yancy, Esq.
Law Offices of Park and Associates
3600 Wilshire Blvd., Suite 1722
Los Angeles, CA 90010

Date Mailed: 11/02/2006

NOTICE REGARDING CHANGE OF POWER OF ATTORNEY

This is in response to the Power of Attorney filed 03/07/2006.

- The Power of Attorney to you in this application has been revoked by the applicant. Future correspondence will be mailed to the new address of record(37 CFR 1.33).

PATRICIA A VOLPE
OP (571) 272-6825

FORMER ATTORNEY/AGENT COPY

UNITED STATES PATENT AND TRADEMARK OFFICE

Commissioner for Patents
United States Patent and Trademark Office
P.O. Box 1450
Alexandria, VA 22313-1450
www.uspto.gov

Beyer Weaver LLP
P.O. Box 70250
Oakland, CA 94612-0250

COPY MAILED

FEB 15 2007

OFFICE OF PETITIONS

In re Application of	:	
Daniele DeIuliis et al.	:	
Application No. 11/076,617	:	DECISION ON PETITION
Filed: March 9, 2005	:	TO WITHDRAW
Attorney Docket No. 20750P-001511US	:	FROM RECORD
	:	

This is a decision on the Request to Withdraw as attorney or agent of record under 37 C.F.R. § 1.36(b), filed October 12, 2006.

The request is **NOT APPROVED** as moot.

A review of the file record indicates that the power of attorney to the attorneys and/or agents associated with Beyer Weaver LLP has been revoked by the assignee of the patent application on January 12, 2007. Accordingly, the request to withdraw under 37 C.F.R. § 1.36(b) is moot.

All future communications from the Office will continue to be directed to the below-listed address until otherwise notified by applicant.

Telephone inquires concerning this decision should be directed to Terri Williams at 571-272-2991.

Terri Williams
Petitions Examiner
Office of Petitions

cc: **Townsend and Townsend and Crew, LLP**
Two Embarcadero Center
8th Floor
San Francisco, CA 94111-3834

UNITED STATES PATENT AND TRADEMARK OFFICE

UNITED STATES DEPARTMENT OF COMMERCE
United States Patent and Trademark Office
Address: COMMISSIONER FOR PATENTS
P.O. Box 1450
Alexandria, Virginia 22313-1450
www.uspto.gov

TOWNSEND AND TOWNSEND AND CREW, LLP
TWO EMBARCADERO CENTER
8TH FLOOR
SAN FRANCISCO, CA 94111-3834

Mail Date: 04/21/2010

Applicant	: Daniele De Iuliis	: DECISION ON REQUEST FOR
Patent Number	: 7573159	: RECALCULATION of PATENT
Issue Date	: 08/11/2009	: TERM ADJUSTMENT IN VIEW
Appliction No	: 11/076,617	: OF WYETH AND NOTICE OF INTENT TO
Filed	: 03/09/2005	: ISSUE CERTIFICATE OF CORRECTION
		:

The Request for Recalculation is **GRANTED** to the extent indicated.

The patent term adjustment has been determined to be **0** days. The USPTO will *sua sponte* issue a certificate of correction reflecting the amount of PTA days determined by the recalculation.

Prior to the issuance of the certificate of correction, the USPTO will afford patentee an opportunity to be heard and request reconsideration. Accordingly, patentee has **one month or thirty (30) days**, whichever is longer, to file a request for reconsideration of this patent term adjustment calculation. See 35 U.S.C. 154(b)(3)(B)(ii) and 37 CFR 1.322(a)(4). No extensions of time will be granted under 37 CFR 1.136.

Patentee should use document code PET.OP if electronically filing a request for reconsideration of this patent term adjustment calculation. The patentee must also include the information required by 37 CFR 1.705(b)(2) and the fee required by 37 CFR 1.18(e). If patentee does not file a timely request for reconsideration of this patent term adjustment calculation including the information required by 37 CFR 1.705(b)(2) and the fee required by 37 CFR 1.18(e), the USPTO will issue a certificate of correction reflecting the PTA determination noted above.

Patentee should be aware that in order to preserve the right to review in the United States District Court for the District of Columbia of the USPTO patent term adjustment determination, patentee must ensure that he or she also take the steps required under 35 U.S.C. 154(b)(4)(A) in a timely manner. Nothing in the request for recalculation should be construed as providing an alternative time frame for commencing a civil action under 35 U.S.C. 154(b)(4)(A).

Any questions concerning this decision should be directed to the Office of Patent Legal Administration at 571-272-7702.

UNITED STATES PATENT AND TRADEMARK OFFICE

Commissioner for Patents
United States Patent and Trademark Office
P.O. Box 1450
Alexandria, VA 22313-1450
www.uspto.gov

Paper No.

THERAVANCE, INC.
901 GATEWAY BOULEVARD
SOUTH SAN FRANCISCO CA 94080

COPY MAILED
DEC 12 2008

In re Application of	:	
Mammen et al.	:	
Application No. 11/076,631	:	ON APPLICATION FOR
Filed: March 10, 2005	:	PATENT TERM ADJUSTMENT
Atty Docket No. P-183-US1	:	

This is in response to the "REQUEST FOR RECONSIDERATION OF PATENT TERM ADJUSTMENT INDICATED IN NOTICE OF ALLOWANCE (37 C.F.R. § 1.705)," filed November 19, 2008. Applicant requests that the determination of patent term adjustment be increased by four hundred and twenty-one (421) days to one thousand and thirty-eight (1038) days. Applicant requests this correction on the basis that the Office will take in excess of three years to issue this patent.

As the instant application for patent term adjustment requests reconsideration of the patent term adjustment as it relates to the Office's failure to issue the patent within 3 years of the filing date, a decision is being **held in abeyance** until after the actual patent date. Knowledge of the actual date the patent issues is required to calculate the amount, if any, of additional patent term patentee is entitled to for Office failure to issue the patent within 3 years. See § 1.703(b).

Applicant is given **TWO (2) MONTHS** from the issue date of the patent to file a written request for reconsideration of the patent term adjustment for Office failure to issue the patent within 3 years. A copy of this decision should accompany the

request. Applicant may seek such consideration without payment of an additional fee. However, as to all other bases for seeking reconsideration of the patent term adjustment indicated in the patent, all requirements of § 1.705(d) must be met. Requests for reconsideration on other bases must be timely filed and must include payment of the required fee.

Rather than file the request for reconsideration of Patent Term Adjustment at the time of the mailing of the notice of allowance, applicant is advised that they may wait until the time of the issuance of the patent and file a request for reconsideration of the patent term pursuant to 37 C.F.R. § 1.705(d). The USPTO notes that it does not calculate the amount of time earned pursuant to 37 C.F.R. § 1.702(b) until the time of the issuance of the patent and accordingly, the Office will consider any request for reconsideration of the patent term adjustment due to an error in the calculation of 37 C.F.R. § 1.702(b) to be timely if the request for reconsideration is filed within two months of the issuance of the patent.

Receipt of the required $200 petition fee, as set forth in 37 C.F.R. § 1.18(e), is acknowledged. No additional fees are required.

The application is being forwarded to the Office of Data Management for issuance of the patent. The patent term adjustment indicated on the patent (as shown on the Issue Notification mailed about three weeks prior to patent issuance) will include any additional adjustment accrued both for Office delay in issuing the patent more than four months after payment of the issue fee and satisfaction of all outstanding requirements, and for the Office taking in excess of three years to issue the patent (to the extent that the three-year period does not overlap with periods already accorded).

Telephone inquiries with respect to this decision may be directed to the undersigned at (571) 272-3219.

Nancy Johnson

Nancy Johnson
Senior Petitions Attorney
Office of Petitions

UNITED STATES PATENT AND TRADEMARK OFFICE

COMMISSIONER FOR PATENTS
UNITED STATES PATENT AND TRADEMARK OFFICE
P.O. BOX 1450
ALEXANDRIA, VA 22313-1450
www.uspto.gov

Paper No.

THERAVANCE, INC.
901 GATEWAY BOULEVARD
SOUTH SAN FRANCISCO CA 94080

COPY MAILED
MAR 08 2010

In re Patent No. 7,501,442	:	DECISION ON REQUEST
Mammen et al.	:	FOR
Issue Date: March 10, 2009	:	RECONSIDERATION OF
Application No. 11/076,631	:	PATENT TERM ADJUSTMENT
Filed: March 10, 2005	:	and
Atty Docket No. P-183-US1	:	NOTICE OF INTENT TO ISSUE
	:	CERTIFICATE OF CORRECTION

This is a decision on the petition filed on March 10, 2009, which is being treated as a petition under 37 CFR 1.705(d) requesting that the patent term adjustment indicated on the above-identified patent be corrected to indicate that the term of the above-identified patent is extended or adjusted by nine hundred eighty-three (983) days.

The petition to correct the patent term adjustment indicated on the above-identified patent to indicate that the term of the above-identified patent is extended or adjusted by nine hundred eighty-three (983) days is **GRANTED to the extent indicated herein.**

The "B" delay period is 365 days, not 366 days. This period begins on the day after the date that is three years after the date on which the application was filed under 35 U.S.C. 111(a). See 37 CFR 1.703(b). Thus, counting begins on March 11, 2008 and not March 10, 2008. The period beginning on March 11, 2008 and ending March 10, 2009 is 365 days, not 366 days. As such, the patent term adjustment is 982, not 983 days

The Office will *sua sponte* issue a certificate of correction. Pursuant to 37 CFR 1.322, the Office will not issue a certificate of correction without first providing assignee or

patentee an opportunity to be heard. Accordingly, patentees are given **one (1) month or thirty (30) days**, whichever is longer, from the mail date of this decision to respond. No extensions of time will be granted under § 1.136.

The Office acknowledges submission of the $200.00 fee set forth in 37 CFR 1.18(e). No additional fees are required.

The application is being forwarded to the Certificates of Branch for issuance of a certificate of correction. The Office will issue a certificate of correction indicating that the term of the above-identified patent is extended or adjusted by nine hundred eighty-two **(982)** days.

Telephone inquiries specific to this matter should be directed to the undersigned at (571) 272-3219.

Nancy Johnson
Senior Petitions Attorney
Office of Petitions

Enclosure: Copy of DRAFT Certificate of Correction

UNITED STATES PATENT AND TRADEMARK OFFICE

CERTIFICATE OF CORRECTION

PATENT : 7,501,442

DATED : **March 10, 2005** **DRAFT**

INVENTOR(S) : Mammen et al.

It is certified that error appears in the above-identified patent and that said Letters Patent is hereby
corrected as shown below:

On the cover page,

[*] Notice: Subject to any disclaimer, the term of this patent is extended or adjusted under 35 USC 154(b) by 617 days

Delete the phrase "by 617 days" and insert – by 982 days--

UNITED STATES PATENT AND TRADEMARK OFFICE

Commissioner for Patents
United States Patent and Trademark Office
P.O. Box 1450
Alexandria, VA 22313-1450
www.uspto.gov

CISLO & THOMAS, LLP
233 WILSHIRE BLVD.
SUITE 900
SANTA MONICA CA 90401-1211

COPY MAILED

OCT 11 2006

OFFICE OF PETITIONS

In re Application of	:	
Stephen G. Baker	:	
Application No. 11/076,641	:	DECISION GRANTING PETITION
Filed: March 9, 2005	:	UNDER 37 CFR 1.137(b)
Attorney Docket No. 05-14582	:	

This is a decision on the petition under 37 CFR 1.137(b), filed May 12, 2006, to revive the above-identified application.

The petition is **GRANTED**.

The petition satisfies the conditions for revival pursuant to the provisions of 37 CFR 1.137(b) in that (1) the reply in the form of an (2) the petition fee; and (3) the required statement of unintentional delay have been received. Accordingly, the reply to the Non-final Rejection of August 9, 2005, is accepted as having been unintentionally delayed.

Telephone inquiries concerning this decision should be directed to the undersigned at (571) 272-3208.

This matter is being referred to Technology Center AU 3743.

Karen Creasy

Karen Creasy
Petitions Examiner
Office of Petitions

UNITED STATES PATENT AND TRADEMARK OFFICE

Commissioner for Patents
United States Patent and Trademark Office
P.O. Box 1450
Alexandria, VA 22313-1450
www.uspto.gov

JUL 2 7 2005

In re Application of	:	
CHOQUETTE et al.	:	
Serial Number: 11/076,664	:	PETITION UNDER
Filed: March 10, 2005	:	M.P.E.P. 708.02
For: SPUTTERING CATHODE ASSEMBLY	:	

This is in response to the petition filed July 15, 2005, requesting that the above-identified application be granted Special Status under Section 708.02 I of the MPEP and 37 CFR 1.102 **(fee required)**.

Section 708.02 I of the MPEP outlines the submission required for an application to be made special on the grounds of prospective manufacture. A statement, by the applicant, assignee or an attorney/agent registered to practice before the Office, is required alleging:

(A) The possession by the prospective manufacturer of sufficient presently available capital (stating approximately the amount) and facilities (stating briefly the nature thereof) to manufacture the invention in quantity or that sufficient capital and facilities will be made available if a patent is granted;

If the prospective manufacturer is an individual, there must be a corroborating statement from some responsible party, as for example, an officer of a bank, showing that said individual has the required available capital to manufacture;

(B) That the prospective manufacturer will not manufacture, or will not increase present manufacture, unless certain that the patent will be granted;

(C) That the prospective manufacturer obligates himself, herself or itself, to manufacture the invention, in the United States or its possessions, in quantity immediately upon the allowance of claims or issuance of a patent which will protect the investment of capital and facilities; and

(D) That the applicant or assignee has made or caused to be made a careful and thorough search of the prior art, or has a good knowledge of the pertinent prior art.

In addition, Applicant must provide one copy of each of the references deemed most closely related to the subject matter encompassed by the claims if said references are not already of record.

The submission, in the instant petition, does not clearly state that the prospective manufacturer possesses the capital and the facilities to manufacture the invention in quantity or that sufficient capital and facilities will be made available if a patent is granted nor does it include a statement that the prospective manufacturer obligates himself, herself or itself, to manufacture the invention, in the United States or its possessions, in quantity immediately upon the allowance of claims or issuance of a patent. In addition, Applicant has not

provided a copy of each reference deemed most closely related to the subject matter encompassed by the claims.

The petition is **DENIED.**

Richard Crispino, Special Programs Examiner
Technology Center 1700
Chemical and Materials Engineering

Charles J. Prescott, P.A.
Suite 155
2033 Wood Street
Sarasota, FL 34237

O I P E JC81
AUG 0 8 2005
PATENT & TRADEMARK OFFICE

IN THE UNITED STATES PATENT AND TRADEMARK OFFICE

Applicant: Robert Choquette, et al.

Serial No.: 11/076,664

Filed: 03/10/2005

For: Sputtering Cathode Assembly

PETITION GRANTED

Richard Crispino
Special Program Examiner
TC 1700

SEP - 1 2005

Commissioner of Patents
P O Box 1450
Alexandria, VA 22313-1450

PETITION TO MAKE SPECIAL
UNDER 37 CFR 1.102(d)

Comes now the Assignee of Applicant, Mustang Vacuum Systems, LLC, the assignee and sole owner of the above-styled application to request that the Commissioner of Patents make this application special under the provisions of the patent office rules on the grounds of prospective manufacture and alleges as follows:

1. That the prospective manufacturer possesses the capital and the facilities to manufacture the cathodes as claimed in this application. The prospective manufacturer has available a capital amount which will exceed three million dollars ($3,000,000.00) to manufacture the invention in large quantities if a patent is granted on this application. Assignee, Mustang Vacuum Systems, LLC is an extension of a larger affiliate, Mustang Dynamometer, which has been in business over 25 years and has over 100,000 square feet of manufacturing floor space;

2. That Assignee will not increase the present manufacturing level of this invention unless certain that a patent will be granted based upon this application;

UNITED STATES PATENT AND TRADEMARK OFFICE

Commissioner for Patents
United States Patent and Trademark Office
P.O. Box 1450
Alexandria, VA 22313-1450
www.uspto.gov
DIW Aug-05

L.C. BEGIN & ASSOCIATES, PLLC
510 HIGHLAND AVENUE
PMB 403
MILFORD MI 48381

COPY MAILED
AUG 0 2 2005
OFFICE OF PETITIONS

In re Application of	:	
Eduardo L. Quioc	:	
Application No. 11/076,683	:	DECISION ON PETITION
Filed: 9 March, 2005	:	
Atty Docket No. 5702-01077	:	

This is a decision on the petition filed on 29 June, 2005, which is treated as a petition under 37 CFR 1.53 requesting that the above-identified application be accorded a filing date of 9 March, 2005, with one (1) sheet of drawings containing Figures 8 and 9 as a part of the original disclosure.

The petition is granted.

The application was filed on 9 March, 2005.

Accordingly, on 27 April, 2005, Initial Patent Examination Division mailed a Notice to File Missing Parts of Nonprovisional Application, requiring an executed oath or declaration, replacement drawings in compliance with 37 CFR 1.84 and 1.121(d), and stating that the application had been accorded a filing date of 9 March, 2005, but that Figures 8 and 9 described in the specification appeared to have been omitted.

In response, on 29 June, 2005 (certificate of mailing date 27 June, 2005), the present petition, the required fees and replacement drawings, and a copy of, *inter alia*, one (1) sheet of drawings containing Figures 8 and 9, were filed. Petitioner argues that Figures 8 and 9 were filed with the other application papers on 9 March, 2005, but were subsequently misplaced in the U.S. Patent and Trademark Office (Office). In support, a copy of petitioner's postcard receipt was supplied with the present petition. The postcard receipt shows an "Office date" stamp of "030905" and the above-identified application number, and identifies the application by the attorney docket number and

inventor's name, and acknowledges receipt of, *inter alia*, 8 drawing sheets. Petitioner requests that the application, including one (1) sheet of drawings containing Figures 8 and 9, be accorded a filing date of 9 March, 2005.

A review of the record reveals that seven (7) sheets of drawings containing Figures 1, 2, 3, 4, 5, 6, and 7 were received on 9 March, 2005. No Figures 8 and 9 are located among the drawing figures received on that date. However, the evidence is convincing that the application papers deposited on 9 March, 2005, included one (1) sheet of drawings containing Figures 8 and 9 which was subsequently misplaced in the Office. Therefore, the application, including one (1) sheet of drawings containing Figures 8 and 9, is entitled to a filing date of 9 March, 2005.

The "Notice" mailed on 27 April, 2005, is vacated to the extent that it stated that Figure 8 and 9 appeared to have been omitted from the application.

In view of the above, the petition is granted. The petition fee will be credited to counsel's deposit account, No. 50-3238, as the petition was necessitated by Office error.

NOTICE OF INCOMPLETE REPLY

It is noted that no oath or declaration is located among the papers filed on 29 June, 2005. Petitioners must submit an oath or declaration as required by the Notice mailed on 27 April, 2005. Extensions of time are available as set forth in the aforementioned Notice.

The application will be processed with the copy of one (1) sheets of drawings containing Figures 8 and 9 supplied on 29 June, 2005, as a part of the original disclosure.

The application is being returned to Initial Patent Examination Division for further processing with a filing date of 9 March, 2005, using the application papers filed on that date and the copy of one (1) sheet of drawings containing Figures 8 and 9 supplied with the present petition, and for an indication in Office records that eight (8) sheets of drawings were present on filing.

Telephone inquires should be directed to the undersigned at 571-272-3231.

Douglas I. Wood
Senior Petitions Attorney
Office of Petitions

UNITED STATES PATENT AND TRADEMARK OFFICE

Commissioner for Patents
United States Patent and Trademark Office
P.O. Box 1450
Alexandria, VA 22313-1450
www.uspto.gov

MAILED

MAR 15 2010

OFFICE OF PETITIONS

Christie, Parker & Hale, LLP
P.O. Box 7068
Pasadena, CA 91109-7068

In re Application of	:	
David Duke	:	
Application No. 11/076,685	:	DECISION ON PETITION
Filed: March 10, 2005	:	TO WITHDRAW
Attorney Docket No. 54500/DRK/D578	:	FROM RECORD
	:	

This is a decision on the Request to Withdraw as attorney or agent of record under 37 C.F.R. § 1.36(b), filed January 6, 2010.

The request is **moot because a revocation of power of attorney has been filed**.

A review of the file record indicates that the power of attorney to Christie, Parker & Hale, LLP and all attorneys/agents associated with customer number 23363 have been revoked by the inventor of the patent application on January 4, 2010. Accordingly, the request to withdraw under 37 C.F.R. § 1.36(b) is moot.

All future communications from the Office will continue to be directed to the below listed until otherwise notified by applicant.

Telephone inquires concerning this decision should be directed to Kimberly Inabinet at 571-272-4618.

/Kimberly Inabinet/

Kimberly Inabinet
Petitions Examiner
Office of Petitions

cc: David Lowell Duke
20828 Jack Tone Road
Ripon, CA 95366

UNITED STATES PATENT AND TRADEMARK OFFICE

Commissioner for Patents
United States Patent and Trademark Office
P.O. Box 1450
Alexandria, VA 22313-1450
www.uspto.gov

COURTNEY STANIFORD & GREGORY LLP
P.O. BOX 9686
SAN JOSE CA 95157

COPY MAILED
SEP 15 2006
OFFICE OF PETITIONS

In re Application of	:	
Jiang	:	
Application No. 11/076,687	:	DECISION ON PETITION
Filed: March 10, 2005	:	TO WITHDRAW
Attorney Docket No. RMWR.P020	:	FROM RECORD
	:	

This is a decision on the Request to Withdraw as attorney or agent of record under 37 C.F.R. § 1.36(b), filed May 24, 2006.

The request is **DISMISSED** as moot.

A review of the file record indicates that the power of attorney to Courtney Staniford & Gregory, LLP has been revoked by the assignee of the patent application on June 30, 2006. Accordingly, the request to withdraw under 37 C.F.R. § 1.36(b) is moot.

All future communications from the Office will continue to be directed to the below-listed address until otherwise notified by applicant.

Telephone inquires concerning this decision should be directed to April Wise at 571-272-1642.

April M. Wise
Petitions Examiner
Office of Petitions

cc: ARENT FOX PLLC
1050 CONNECTICUT AVENUE NW
SUITE 400
WASHINGTON, DC 20036-5339

UNITED STATES PATENT AND TRADEMARK OFFICE

Commissioner for Patents
United States Patent and Trademark Office
P.O. Box 1450
Alexandria, VA 22313-1450
www.uspto.gov

O'KEEFE, EGAN & PETERMAN
1101 CAPITAL OF TEXAS HIGHWAY SOUTH
#C200
AUSTIN TX 78746

COPY MAILED

SEP 19 2006

OFFICE OF PETITIONS

In re Application of	:	
QUINN, et al.	:	
Application No. 11/076,690	:	DECISION ON PETITION
Filed: March 10, 2005	:	TO WITHDRAW
Attorney Docket No. DELL:020	:	FROM RECORD
	:	

This is a decision on the Request to Withdraw as attorney or agent of record under 37 C.F.R. § 1.36(b), filed May 12, 2006.

The request is **APPROVED**.

A grantable request to withdraw as attorney/agent of record must be signed by every attorney/agent seeking to withdraw or contain a clear indication that one attorney is signing on behalf of another/others. A request to withdraw will not be approved unless at least 30 (thirty) days would remain between the date of approval and the later of the expiration date of a time to file a response or the expiration date of the maximum time period which can be extended under 37 C.F.R. § 1.136(a).

The request was signed by Maximilian R. Peterson. Maximilian R. Peterson has been withdrawn as attorney or agent of record; all other attorneys remain of record. The correspondence address of record remains unchanged.

Telephone inquiries concerning this decision should be directed to Monica A. Graves at 571-272-7253.

Denise Pothier
Petitions Examiner
Office of Petitions

UNITED STATES PATENT AND TRADEMARK OFFICE

COMMISSIONER FOR PATENTS
UNITED STATES PATENT AND TRADEMARK OFFICE
P.O. BOX 1450
ALEXANDRIA, VA 22313-1450
www.uspto.gov

BROOKS KUSHMAN P.C.
1000 TOWN CENTER
TWENTY-SECOND FLOOR
SOUTHFIELD, MI 48075

COPY MAILED

NOV 20 2006

OFFICE OF PETITIONS

In re Application of Ramamurthy, et al. Application No. 11/076,718 Filed: March 10, 2005 Docket No.: DDC 0576 PUS For: SYSTEM AND METHOD FOR BACKPRESSURE COMPENSATION FOR CONTROLLING EXHAUST GAS PARTICULATE EMISSIONS	DECISION GRANTING STATUS UNDER 37 CFR 1.47(a)

This decision is in response to the petition under 37 CFR 1.47(a), filed June 6, 2005. This decision corrects the decision mailed August 5, 2005.

The petition under 37 CFR 1.47(a) is **GRANTED**.

Petitioner has shown that inventor Ravishankar Ramamurthy has refused to sign the declaration after having been presented with the application papers.

Thus, the above-identified application and papers have been reviewed and found in compliance with 37 CFR 1.47(a). This application is hereby accorded Rule 1.47(a) status.

As provided in Rule 1.47(c), this Office will forward notice of this application's filing to the non-signing inventor at the address given in the petition. Notice of the filing of this application will also be published in the Official Gazette.

After this decision is mailed, the above-identified application will be returned to the Office of Initial Patent Examination for further processing.

Telephone inquiries regarding this decision should be directed to the undersigned at (571) 272-3205.

Alesia M. Brown
Petitions Attorney
Office of Petitions

UNITED STATES PATENT AND TRADEMARK OFFICE

COMMISSIONER FOR PATENTS
UNITED STATES PATENT AND TRADEMARK OFFICE
P.O. BOX 1450
ALEXANDRIA, VA 22313-1450
www.uspto.gov

Ravishankar Ramamurthy
285 Carson Drive
Westland, MI 48185

COPY MAILED

NOV 20 2006

OFFICE OF PETITIONS

In re Application of :
Ramamurthay, et al. : LETTER
Application No. 11/076,718 :
Filed: March 10, 2006 :
Atty. Dkt. No.: DDC 0576 PUS :
For: SYSTEM AND METHOD FOR :
BACKPRESSURE COMPENSATION FOR :
CONTROLLING EXHAUST GAS :
PARTICULATE EMISSIONS :

Dear Sir:

You are named as an inventor in the above-identified United States patent application filed under the provisions of 35 U.S.C. 116 (United States Code) and 37 C.F.R. § 1.47(a), Rules of Practice in Patent Cases. Should a patent be granted on the application you will be designated therein as a joint inventor.

As a named inventor you are entitled to inspect any paper in the file wrapper of the application, order copies of all or any part thereof (at a prepaid cost as per 37 C.F.R. § 1.19) or make your position of record in the application. Alternatively, you may arrange to do any of the preceding through a registered patent attorney or agent presenting written authorization from you. If you care to join the application, counsel of record (see below) would presumably assist you. Joining in the application would entail the filing of an appropriate oath or declaration by you pursuant to 37 C.F.R. § 1.63.

Requests for information regarding your application should be directed to the File Information Unit at (703) 308-2733. Information regarding how to pay for and order a copy of the application, or a specific paper in the application, should be directed to Certification Division at (703) 308-9726 or 1-800-972-6382 (outside the Washington D.C. area).

Alesia M. Brown
Petitions Attorney
Office of Petitions

UNITED STATES PATENT AND TRADEMARK OFFICE

Commissioner for Patents
United States Patent and Trademark Office
P.O. Box 1450
Alexandria, VA 22313-1450
www.uspto.gov

BROOKS KUSHMAN P.C.
1000 TOWN CENTER
TWENTY-SECOND FLOOR
SOUTHFIELD MI 48075

COPY MAILED

DEC 2 7 2007

OFFICE OF PETITIONS

In re Application of :
Ramamurthy, et al. :
Application No. 11/076,718 :
Filed: March 10, 2005 :
Attorney Docket No. DDC 0576 PUS :
For: SYSTEM AND METHOD FOR BACKPRESSURE COMPENSATION FOR CONTROLLING EXHAUST GAS PARTICULATE EMISSIONS

ON PETITION

This is a decision on the petition filed October 22, 2007 (certificate of mailing date October 17, 2007), entitled, "PETITION TO FILE PATENT APPLICATION UNDER 37 CFR 1.47(A)." The petition will be treated as a petition under CFR 1.183, requesting waiver of 37 CFR 1.63 and 1.67, which requires all of the joint inventors to execute a supplemental declaration.[1]

The petition under 37 CFR 1.183 to waive 37 CFR 1.63 and 1.67 is **DISMISSED**.

The petition under 37 CFR 1.47(a) is **DISMISSED AS MOOT**.

Any request for reconsideration of this decision must be submitted within TWO (2) MONTHS from the mail date of this decision. Extensions of time under 37 CFR 1.136(a) are permitted. Any response should be entitled "Request for Reconsideration of Petition Under 37 CFR 1.183 to waive 37 CFR 1.63 and 1.67" and may include an oath or declaration executed by the inventor. **Failure to respond will result in abandonment of the application.**

While this waiver petition is not a petition under 37 CFR 1.47, it is evaluated in much the same way a Rule 47 petition is. Therefore, a grantable petition requires:

---

[1] Once an application has received a fully executed oath or declaration and been placed on the files for examination, the provisions of 37 CFR 1.47 no longer apply. Rather, the remedy for treating an inventor's refusal or unavailability to sign a supplemental oath or declaration is waiver of 37 CFR 1.67. See MPEP 603.

(1) a petition including proof of the pertinent facts establishing that the joint inventor(s) refuses to join, or cannot be found or reached after diligent effort,
(2) a proper oath or Declaration executed by the available joint inventor(s),
(3) a petition fee, and
(4) the last known address of the omitted inventor(s).

This petition lacks items (1) and (2).

With respect to item (1), applicant has failed to establish that the non-signing inventor, Laurentiu Vaduva, cannot be located or has refused to sign the supplemental declaration. The petition states that Mr. Vaduva could not be reached via telephone and that no response has been received from a July 26, 2007 certified letter requesting that Mr. Vaduva execute a supplemental declaration.

It is unclear whether or not the July 26, 2007 certified letter was delivered. Exhibit C is missing from the petition. If petitioner has evidence that the July 26, 2007 certified letter was received by Mr. Vaduva, please submit it. What was the contents of the July 26, 2007 certified letter?

Where there is an express or oral refusal, that fact, along with the time and place of the refusal, must be stated in an affidavit or declaration **by the party to whom the refusal was made.** Where there is a written refusal, a copy of the document(s) evidencing that refusal must be made part of the affidavit or declaration.

If it is concluded by petitioner that an omitted inventor's conduct constitutes a refusal, all facts upon which that conclusion is based should be stated in an affidavit or declaration. If there is documentary evidence to support facts alleged in the affidavit or declaration, such evidence must be submitted.

Whenever an omitted inventor gives a reason for refusing to sign the application oath or declaration, that reason should be stated in the affidavit or declaration.

If the letter was not delivered, then petitioner may be facing a situation where Mr. Vaduva cannot be located to sign the declaration, rather than a situation where he has refused to sign the declaration.

A showing of diligence in attempting to locate a non-signing inventor must be submitted when it is alleged that an inventor cannot be located.

As a preliminary matter, petitioner is informed that e-mailing is generally not accepted as a means to communicate with non-signing inventors. This is because the Office cannot know definitely if the message was received; people are not as careful in deleting e-mails as they are in throwing out mail as shown by bulk folder deletions and the fact that some people might not check e-mails frequently; the Office does not know if the recipient has the program to open the specific attachment; and PTO guidelines regarding accepting e-mail reflects the fact that the Office does not have the same confidence in e-mail as it does in USPS service.

The Office typically requires documentary evidence of successful e-mailing in the form of a response e-mail from the non-signing inventor in which the inventor acknowledges receipt of the e-mail and

his ability to read the attachments. Thus, even if petitioner knew Mr. Vaduva's current e-mail address, sending an e-mail alone would not be sufficient.

Petitioner should engage in further efforts to locate Mr. Vaduva, especially if it is determined that the last known contact information provided by Margaret Johnson is not up-to-date. The following is a list of evidentiary sources that are commonly relied upon to prove inability to locate an inventor: searches of Internet databases; inquiries of local telephone directories; telegrams; and documented inquiries of last known employers. Every listed type of search need not be done. However, a diligent effort to find the inventor must be made.

Documentary evidence that supports a finding that the non-signing inventor could not be found or reached should be made part of any affidavits or declarations that fully describe the exact facts which are relied on to establish that a diligent effort was made to locate the non-signing inventor. Printed computer records of Internet searches would suffice.

The affidavit or declaration of facts must be signed, where at all possible, by a person having *firsthand knowledge* of the facts recited therein. Statements based on hearsay will not normally be accepted. It is important that the affidavit or declaration contain statements of fact as opposed to conclusions.

As to item (2) above, the declaration is defective as the wording of an oath or declaration cannot be amended, altered or changed in any manner after it has been signed. The declarlation executed by Admir Kreso contains non-dated/non-initialed changes. 37 CFR 1.52(c) states that "[a]ny interlineation, erasure, cancellation or other alteration of the application papers filed should be made on or before the signing of the accompanying oath or declaration pursuant to 1.63...." This includes the oath or declaration. The Office will not consider whether noninitialed and or nondated alterations were made before or after signing of the oath or declaration but will require a new oath or declaration.

Accordingly, a new oath or declaration containing full information for all inventors must be signed by the available inventors.

Regarding fees, petitioners submitted $200.00. The current Rule 183 petition fee is $400.00. Accordingly, deposit account no. 02-3978 will be charged the $200.00 balance due.

Further correspondence with respect to this matter should be addressed as follows:

By mail:

Mail Stop PETITION
Commissioner for Patents
Post Office Box 1450
Alexandria, VA 22313-1450

By hand: U.S. Patent and Trademark Office
Customer Service Window, Mail Stop Petition
Randolph Building
401 Dulany Street
Alexandria, VA 22314

By FAX: (571) 273-8300 - ATTN: Office of Petitions

Telephone inquiries should be directed to the undersigned at (571) 272-3230.

Shirene Willis Brantley
Senior Petitions Attorney
Office of Petitions

UNITED STATES PATENT AND TRADEMARK OFFICE

Commissioner for Patents
United States Patent and Trademark Office
P.O. Box 1450
Alexandria, VA 22313-1450
www.uspto.gov

BROOKS KUSHMAN P.C.
1000 TOWN CENTER
TWENTY-SECOND FLOOR
SOUTHFIELD MI 48075

COPY MAILED

JUN 0 4 2008

OFFICE OF PETITIONS

In re Application of :
Ramamurthy, et al. :
Application No. 11/076,718 : ON PETITION
Filed: March 10, 2005 :
Attorney Docket No. DDC 0576 PUS :
For: SYSTEM AND METHOD FOR BACKPRESSURE COMPENSATION FOR CONTROLLING EXHAUST GAS PARTICULATE EMISSIONS

This is a decision on the reconsideration petition, filed February 29, 2008 (certificate of mailing date February 27, 2008), under CFR 1.183, requesting waiver of 37 CFR 1.63 and 1.67, which requires all of the joint inventors to execute a supplemental declaration.

The petition under 37 CFR 1.183 to waive 37 CFR 1.63 and 1.67 is **GRANTED**.

Applicant has established that the non-signing inventor, Laurentiu Vaduva, has constructively refused to sign the supplemental declaration. Applicant has submitted a new oath or declaration containing full information for all inventors, signed by the available inventor -- Admir Kreso.

After the mailing of this decision, the application will be returned to Technology Center AU 3748 for consideration of applicant's reply to the July 23, 2007 Quayle action.

Telephone inquiries should be directed to the undersigned at (571) 272-3230.

Shirene Willis Brantley

Shirene Willis Brantley
Senior Petitions Attorney
Office of Petitions

UNITED STATES PATENT AND TRADEMARK OFFICE

Commissioner for Patents
United States Patent and Trademark Office
P.O. Box 1450
Alexandria, VA 22313-1450
www.uspto.gov

LINDA B LUDWIG MD
861 MAIN ST
EAST AURORA NY 14052

COPY MAILED

AUG 1 0 2005

OFFICE OF PETITIONS

In re Application of	:	
Linda B. Ludwig	:	
Application No. 11/076,728	:	DECISION ON PETITION
Filed: March 10, 2005	:	
Title: HIV Antisense Proteins	:	

This is a decision on the paper titled "PETITION UNDER 37 CFR 1.182", filed June 27, 2005, requesting that the application be accorded a filing date of March 10, 2005 with Figures 1a-b, 2a-b, 3a-b, 4, 5a-b, 6-9, 10a-f, 11, and 12a-d as part of the disclosure.

The petition is **GRANTED**.

The application was deposited on March 10, 2005, as a divisional application under 37 CFR 1.53(b) based on prior application No. 10/135,545, but omitted a copy of the drawings. Accordingly, on May 17, 2005, the Initial Patent Examination Division mailed a "Notice of Incomplete Nonprovisional Application", requiring drawings and stating that the filing date would be the date of receipt of the omitted drawings. In addition the Notice informed applicant that she had to submit a sequence listing in compliance with 37 CFR 1.821-1.825.

In response, petitioner filed the present petition on June 27, 2005. Petitioner admits that the drawing figures were omitted. However, petitioner requested that the drawing figures be incorporated into the application based upon the incorporation by reference statement contained in the first sentence of the specification.

MPEP § 201.06(c) states that:

> Material needed to accord an application a filing date may not be incorporated by reference. Therefore, if a continuation or divisional application as originally filed incorporates by reference material omitted from the application papers, which is needed to accord the application a filing date, the application will not be entitled to a filing date. A petition under 37 CFR 1.182 and the required petition fee, including an amendment submitting the necessary omitted material, requesting that the necessary omitted material contained in the prior application and submitted in the amendment, be included in the continuation or divisional application based upon the incorporation by reference statement, is required in order to accord the application a filing date as of the date of deposit of the continuation or divisional application. An amendment submitting the omitted material and relying upon the incorporation by reference will not be entered in the continuation or divisional application unless a decision granting the petition states that the application is accorded a filing date and that the amendment will be entered.

Applicant has filed the instant petition, paid the petition fee, and submitted Figures 1a-b, 2a-b, 3a-b, 4, 5a-b, 6-9, 10a-f, 11, and 12a-d.

Receipt of the $400 petition fee is acknowledged.

The application is being returned to the Office of Initial Patent Examination for further processing with a filing date of March 10, 2005, using the application papers submitted on that date and the copy of Figures 1a-b, 2a-b, 3a-b, 4, 5a-b, 6-9, 10a-f, 11, and 12a-d submitted with the instant petition.

Telephone inquiries specific to this matter should be directed to the undersigned at 571-272-3207.

Cliff Congo
Petitions Attorney
Office of Petitions

UNITED STATES PATENT AND TRADEMARK OFFICE AUG 1 1 2008

Commissioner for Patents
United States Patent and Trademark Office
P.O. Box 1450
Alexandria, VA 22313-1450
www.uspto.gov

Linda B. Ludwig
861 Main Street
East Aurora, NY 14052

In re Application of :
Linda B. Ludwig :
Serial No.: 11/076,728 :Decision on Petition
Filed : March 10, 2005 :

This letter is in response to the letter filed on filed on April 9, 2008 requesting reconsideration of the restriction requirement. The Petition from requirement for restriction was made under 37 C.F.R. 1.144.

BACKGROUND

On June 25, 2007, the examiner mailed a restriction requirement in which the original claims 1-17 were divided into 10 groups and required a species requirement to a particular substitution.

On September 25, 2007, Applicants filed a response to the restriction requirement. Applicants elected Claims 3 and 4 directed to a protein having SEQ ID No 28, with traverse

On December 11, 2007, the examiner mailed to applicant a an Ex Parte Quayle Action. The examiner reviewed applicants' arguments with respect to the rejoinder of SEQ ID NO: 33 but found the arguments non-persuasive. With respect to the election of species for Claim 4, the examiner found Claim 4 allowable and thus the election of species with regard to Group II has been withdrawn. The restriction requirement was made final.

On April 9, 2008, the Applicant filed a response and applicants filed this petition to request that the Office reconsider the restriction requirement.

DISCUSSION

The petition and extensive file history have been carefully considered.

An examination of this application reveals that applicant is unfamiliar with patent prosecution procedure. While an inventor may prosecute the application, lack of skill in this field usually acts as a liability in affording the maximum protection for the invention disclosed. Applicant is advised to secure the services of a registered patent attorney or agent to prosecute the

application, since the value of a patent is largely dependent upon skilled preparation and prosecution. The Office cannot aid in selecting an attorney or agent.

A listing of registered patent attorneys and agents is available on the USPTO Internet web site http://www.uspto.gov in the Site Index under "Attorney and Agent Roster." Applicants may also obtain a list of registered patent attorneys and agents located in their area by writing to the Mail Stop OED, Director of the U. S. Patent and Trademark Office, PO Box 1450, Alexandria, VA 22313-1450

The petition cites Manual of Patent Examining Procedure (MPEP) 803.04 directed to the 1996 OG Notice, which granted a partial waiver for independent and distinct inventions. This argument has been reviewed but is not convincing.

An OG Notice published March 27, 2007 rescinded the 1996 OG Notice that provided for a partial waiver of the requirements for restriction practice by permitting examination of a reasonable number, up to ten, independent and distinct polynucleotide molecules in a single 35 USC 111(a) or 35 USC 371 application. The Notice indicated that the standard of independence and distinctness would be applied to polynucleotide claims filed in an application under 35 USC 111(a).

Additionally, the March 27, 2007 OG Notice specifically spoke to the issue of burden of searching more than one independent and distinct invention.

The petition asserts that invention is the discovery of a novel gene encoding a single antisense RNA that encodes at least three separate proteins. The petition then asserts the genes are novel and important as targets for vaccine development. The response appears to assert a combination of sequences would be useful. The arguments are not persuasive because no claims directed to a combination are presented and because applicants elected a protein, not an antisense NA for examination.

The MPEP explains that a single combination of nucleotide sequence may be pursued in 803.04. Where applicant elects a subcombination and claims thereto are subsequently found allowable, any claim(s) depending from or otherwise requiring all the limitations of the allowable subcombination will be examined for patentability in accordance with 37 CFR 1.104. See MPEP § 821.04(a).

The petition further requests rejoinder of Claims directed to polynucleotides of Group I (Claims 1 and 2), IV (Claims 7 and 8), VII (Claims 12 and 13). As noted in the initial restriction requirement, the polynucleotides are a distinct invention from the protein. The inventions of Groups I, IV and VII are patentably distinct products from the protein of Group II because the DNA of Groups I, IV and VII and the protein of Group II have different structures, properties and functions. The DNA of Group I is composed of nucleotides linked in phosphodiester bonds and arranged in space as a double helix. The DNA can function not only for the expression of the protein but also as a probe in a nucleic acid hybridization assay and in a nucleic acid amplification assay, for example. In contrast, the polypeptide of Group II is composed of amino acids linked in peptide bonds and arranged spatially in a number of different tertiary structures

including alpha helices, beta-pleated sheets, and hydrophobic loops (transmembrane domain). The polypeptide can function not only as a receptor but also for the generation of polyclonal and monoclonal antibodies and for the affinity purification of those antibodies or of ligands for the receptor. Furthermore, searching the inventions of groups I, IV and VII together would impose a serious search burden. In the instant case, the search of the polypeptides and the polynucleotides are not coextensive. The inventions have a separate status in the art as shown by their different classifications. In cases such as this one where descriptive sequence information is provided, the sequences are searched in appropriate databases. There is search burden also in the non-patent literature. Prior to the concomitant isolation and expression of the sequence of interest there may be journal articles devoted solely to polypeptides which would not have described the polynucleotide. Similarly, there may have been "classical" genetics papers which had no knowledge of the polypeptide but spoke to the gene. Searching, therefore is not coextensive.

Moreover, the petition requests rejoinder of Group V (Claim 9), Group VI (Claims 10-11) and Group VIII (Claims 14-15). Claim 9 is drawn to SEQ ID NO: 30; Claims 10-11 are drawn to SEQ ID NO: 31 and Claims 14-15 are drawn to SEQ ID NO: 35 The proteins of SEQ ID NO: 30, 31 and 35 differ in structure and function from SEQ ID NO: 28. A search of SEQ ID NO: 28 would not be co-extensive for a search of SEQ ID NO: 30 or 31 or 35. Moreover, there is no allowable generic claim that encompasses the various proteins. Thus the claimed proteins are independent and distinct from each other.

Applicants newly presented claims after prosecution is closed will not be rejoined. As provided in MPEP 714.20, "(C) In an application in which prosecution on the merits is closed, i.e., after the issuance of an Ex Parte Quayle action, where an amendment is presented curing the noted formal defect and adding one or more claims some or all of which are in the opinion of the examiner not patentable, or will require a further search, the amendment in such a case will be entered only as to the formal matter. Applicant has no right to have new claims considered or entered at this point in the prosecution." Here the newly added Claims will not be entered as a matter or right.

DECISION

The petition is **DENIED** for the reasons set forth above.

The application will be forwarded to the examiner to assess the entry of the papers filed 9 April 2008 in response to the Ex parte Quayle.

Any request for reconsideration must be filed within two (2) months of the mailing date of this decision.

Should there be any questions about this decision, please contact Special Program Examiner Julie Burke, by letter addressed to Director, Technology Center 1600, at the address listed above, or by telephone at 571-272-1600 or by facsimile sent to the general Office facsimile number, 571-273-8300.

John LeGuyader
Director, Technology Center 1600
jb/jg

UNITED STATES PATENT AND TRADEMARK OFFICE

MAR 0 5 2009

Commissioner for Patents
United States Patent and Trademark Office
P.O. Box 1450
Alexandria, VA 22313-1450
www.uspto.gov

Linda B. Ludwig
861 Main Street
East Aurora, NY 14052

In re Application of	:
Linda B. Ludwig	:
Serial No.: 11/076,728	:Decision on Petition
Filed : March 10, 2005	:

This letter is in response to the letter filed on filed on October 15, 2008 containing a renewed request for reconsideration of the restriction requirement. The Petition from requirement for restriction was made under 37 C.F.R. 1.144.

BACKGROUND

This is a renewed petition. A review of the file history may be found in the petition decision mailed out on

August 11, 2008, in which the Office denied applicant's petition for withdrawal of the restriction requirement.

On October 15, 2008, the Applicant filed a request for reconsideration of the Petition to the Director.

DISCUSSION

The petition and extensive file history have been carefully considered.

1. Pro Se Status

An examination of this application reveals that applicant is unfamiliar with patent prosecution procedure. While an inventor may prosecute the application, lack of skill in this field usually acts as a liability in affording the maximum protection for the invention disclosed. Applicant is advised to secure the services of a registered patent attorney or agent to prosecute the application, since the value of a patent is largely dependent upon skilled preparation and prosecution. The Office cannot aid in selecting an attorney or agent.

A listing of registered patent attorneys and agents is available on the USPTO Internet

web site http://www.uspto.gov in the Site Index under "Attorney and Agent Roster." Applicants may also obtain a list of registered patent attorneys and agents located in their area by writing to the Mail Stop OED, Director of the U. S. Patent and Trademark Office, PO Box 1450, Alexandria, VA 22313-1450

2. OG Notice Remarks

The petition filed October 15, 2008 requests reconsideration of the Petition filed April 9, 2008 to allow rejoinder. The petition filed October 15, 2008 further submits a set of revised claims and additional comments.

This application is a divisional of copending parent application 10/135,545. The Group comprising a protein of SEQ ID NO: 28, as elected in the instant application was designated as Group II.

In this application the restriction requirement similarly placed the protein of SEQ ID NO: 28 on September 25, 2007 into Group II.

The petition cites the Manual of Patent Examining Procedure (MPEP) section 803.04 directed to the 1996 Official Gazette (OG) Notice, which granted a partial waiver for independent and distinct inventions. This argument has been reviewed but is not convincing.

It is noted that on March 27, 2007 the Office published an OG Notice that rescinded the 1996 OG Notice that provided for a partial waiver of the requirements for restriction practice by permitting examination of a reasonable number, *up to ten*, independent and distinct polynucleotide molecules in a single 35 USC 111(a) or 35 USC 371 application. The 2007 OG Notice indicated that the standard of independence and distinctness would be applied to polynucleotide claims filed in an application under 35 USC 111(a).

The petition asserts that the OG Notice of 2007 was clearly not in effect at the time the divisional application was filed and that the applicant/inventor could not possibly have know at the time the application was filed of the later rules. This argument has been reviewed but is not persuasive. First, the application is restricted in the same, consistent manner as the parent application which also groups Claims 3-4 in Group II and found them distinct from claims to other proteins and nucleic acids, for examples. Second, as correctly pointed out by the applicant on page 2 of the renewed petition, the OG notice of 1996 provided for "up to ten" which clearly includes one.

Additionally, the March 27, 2007 OG Notice specifically spoke to the issue of burden of searching more than one independent and distinct invention.

The petition asserts that invention is the discovery of a novel gene encoding a single antisense RNA that encodes at least three separate proteins. The petition then asserts the genes are novel and important as targets for vaccine development. The response appears to assert a combination of sequences would be useful. The arguments are not persuasive because no claims directed to a combination are presented and because applicants elected a protein, not an antisense NA for examination.

The MPEP explains that a single combination of nucleotide sequence may be pursued in 803.04. Where applicant elects a subcombination and claims thereto are subsequently found allowable, any claim(s) depending from or otherwise requiring all the limitations of the allowable subcombination will be examined for patentability in accordance with 37 CFR 1.104. See MPEP § 821.04(a).

While the Office certainly appreciates the significant effort invested by the inventor over 9 years of studies of the HIV antisense gene, beginning in October 1995, unfortunately, the Office would be unable to rejoin additional independent and distinct groups without accepting serious burden to search and examine more than one protein and additional distinct groups of molecules such as polynucleotides along with the elected invention,

The petition further requests rejoinder of Claims directed to polynucleotides of Group I (Claims 1 and 2), IV (Claims 7 and 8), VII (Claims 12 and 13). As noted in the initial restriction requirement, the polynucleotides are a distinct invention from the protein. The inventions of Groups I, IV and VII are patentably distinct products from the protein of Group II because the DNA of Groups I, IV and VII and the protein of Group II have different structures, properties and functions. The DNA of Group I is composed of nucleotides linked in phosphodiester bonds and arranged in space as a double helix. The DNA can function not only for the expression of the protein but also as a probe in a nucleic acid hybridization assay and in a nucleic acid amplification assay, for example. In contrast, the polypeptide of Group II is composed of amino acids linked in peptide bonds and arranged spatially in a number of different tertiary structures including alpha helices, beta-pleated sheets, and hydrophobic loops (transmembrane domain). The polypeptide can function not only as a receptor but also for the generation of polyclonal and monoclonal antibodies and for the affinity purification of those antibodies or of ligands for the receptor. Furthermore, searching the inventions of groups I, IV, VII together would impose a serious search burden. In the instant case, the search of the polypeptides and the polynucleotides are not coextensive. The inventions have a separate status in the art as shown by their different classifications. In cases such as this one where descriptive sequence information is provided, the sequences are searched in appropriate databases. There is search burden also in the non-patent literature. Prior to the concomitant isolation and expression of the sequence of interest there may be journal articles devoted solely to polypeptides which would not have described the polynucleotide. Similarly, there may have been "classical" genetics papers which had no knowledge of the polypeptide but spoke to the gene. Searching, therefore is not coextensive.

The renewed petition asserts that "gene" requires all three components: the DNA, the RNA and the proteins. This argument has been reviewed but is not deemed persuasive. The standard for distinction and burden has been meet in the instant application. Moreover, while the inventor views the invention as the discovery of the gene, is inconsistent with the presentation of claims drafted separately to proteins and polynucleotides, for example.

Moreover, the petition requests rejoinder of Group V (Claim 9), Group VI (Claims 10-11) and Group VIII (Claims 14-15). Claim 9 is drawn to SEQ ID NO: 30; Claims 10-11 are drawn to SEQ ID NO: 31 and Claims 14-15 are drawn to SEQ ID NO: 35 The proteins of SEQ ID NO: 30, 31 and 35 differ in structure and function from SEQ ID NO: 28 and for these rasons are

patentably distinct from the elected invention. A search of SEQ ID NO: 28 would not be co-extensive for a search of SEQ ID NO: 30 or 31 or 35. Because there is no allowable generic claim that encompasses the various proteins, the claimed proteins are considered independent and distinct from each other.

The newly presented claims submitted by applicant after prosecution is closed are noted. As provided in MPEP 714.20, "(C) In an application in which prosecution on the merits is closed, i.e., after the issuance of an Ex Parte Quayle action, where an amendment is presented curing the noted formal defect and adding one or more claims some or all of which are in the opinion of the examiner not patentable, or will require a further search, the amendment in such a case will be entered only as to the formal matter. Applicant has no right to have new claims considered or entered at this point in the prosecution." Here the newly added Claims will not be entered as a matter of right.

DECISION

The renewed petition is **DENIED** for the reasons set forth above.

The application will be forwarded to the examiner to consider the status of the papers filed 15 October 2008 including newly amended Claims 18 and 19.

Any request for reconsideration must be filed within two (2) months of the mailing date of this decision.

Should there be any questions about this decision, please contact Special Program Examiner Julie Burke, by letter addressed to Director, Technology Center 1600, at the address listed above, or by telephone at 571-272-1600 or by facsimile sent to the general Office facsimile number, 571-273-8300.

John LeGuyader
Director, Technology Center 1600
jb/jg

UNITED STATES PATENT AND TRADEMARK OFFICE

COMMISSIONER FOR PATENTS
UNITED STATES PATENT AND TRADEMARK OFFICE
WASHINGTON, D.C. 20231
www.uspto.gov

Ranjana Kadle
HODGSON RUSS LLP
One M&T Plaza, Suite 2000
Buffalo, NY 14230-2391

In re Application of:	:	
Bright, et al..	:	DECISION ON PETITION
Serial No.: 11/076729	:	FOR USE OF COLOR DRAWINGS UNDER
Filed: March 10, 2005	:	37 C.F.R 1.84(a)(2)
Attorney Docket No.: **11520.0413**	:	

This is a decision in response to the petition under 37 C.F.R. 1.84(a)(2) filed March 10, 2005. The petition fee has been paid.

The petition is **GRANTED**.

The Petition sets forth an explanation regarding why the color drawings are necessary, the required fee, and three sets of color drawings. The required paragraph is already present in the Specification.

Accordingly, the color drawings are accepted as formal drawings in the above-referenced application.

David P. Porta, Supervisor
Technology Center 2800
Semiconductors, Electrical and Optical
Systems and Components

UNITED STATES PATENT AND TRADEMARK OFFICE

UNITED STATES DEPARTMENT OF COMMERCE
United States Patent and Trademark Office
Address: COMMISSIONER FOR PATENTS
P.O. Box 1450
Alexandria, Virginia 22313-1450
www.uspto.gov

CARR & FERRELL LLP
2200 GENG ROAD
PALO ALTO, CA 94303

Mail Date: 04/21/2010

Applicant	: Michael Earl Dooley	: DECISION ON REQUEST FOR
Patent Number	: 7623547	: RECALCULATION of PATENT
Issue Date	: 11/24/2009	: TERM ADJUSTMENT IN VIEW
Appliction No	: 11/076,730	: OF WYETH AND NOTICE OF INTENT TO
Filed	: 03/09/2005	: ISSUE CERTIFICATE OF CORRECTION
		:

The Request for Recalculation is **GRANTED** to the extent indicated.

The patent term adjustment has been determined to be **1014** days. The USPTO will *sua sponte* issue a certificate of correction reflecting the amount of PTA days determined by the recalculation.

Prior to the issuance of the certificate of correction, the USPTO will afford patentee an opportunity to be heard and request reconsideration. Accordingly, patentee has **one month or thirty (30) days**, whichever is longer, to file a request for reconsideration of this patent term adjustment calculation. See 35 U.S.C. 154(b)(3)(B)(ii) and 37 CFR 1.322(a)(4). No extensions of time will be granted under 37 CFR 1.136.

Patentee should use document code PET.OP if electronically filing a request for reconsideration of this patent term adjustment calculation. The patentee must also include the information required by 37 CFR 1.705(b)(2) and the fee required by 37 CFR 1.18(e). If patentee does not file a timely request for reconsideration of this patent term adjustment calculation including the information required by 37 CFR 1.705(b)(2) and the fee required by 37 CFR 1.18(e), the USPTO will issue a certificate of correction reflecting the PTA determination noted above.

Patentee should be aware that in order to preserve the right to review in the United States District Court for the District of Columbia of the USPTO patent term adjustment determination, patentee must ensure that he or she also take the steps required under 35 U.S.C. 154(b)(4)(A) in a timely manner. Nothing in the request for recalculation should be construed as providing an alternative time frame for commencing a civil action under 35 U.S.C. 154(b)(4)(A).

Any questions concerning this decision should be directed to the Office of Patent Legal Administration at 571-272-7702.

UNITED STATES PATENT AND TRADEMARK OFFICE

UNITED STATES DEPARTMENT OF COMMERCE
United States Patent and Trademark Office
Address: COMMISSIONER FOR PATENTS
P.O. Box 1450
Alexandria, Virginia 22313-1450
www.uspto.gov

APPL NO.	FILING OR 371 (c) DATE	ART UNIT	FIL FEE REC'D	ATTY.DOCKET NO	DRAWINGS	TOT CLMS	IND CLMS
11/076,743	03/10/2005	2859	1130	2003P17325US	3	8	1

CONFIRMATION NO. 5194

CORRECTED FILING RECEIPT

OC000000016607731

SIEMENS CORPORATION
INTELLECTUAL PROPERTY DEPARTMENT
170 WOOD AVENUE SOUTH
ISELIN, NJ 08830

Date Mailed: 07/25/2005

Receipt is acknowledged of this regular Patent Application. It will be considered in its order and you will be notified as to the results of the examination. Be sure to provide the U.S. APPLICATION NUMBER, FILING DATE, NAME OF APPLICANT, and TITLE OF INVENTION when inquiring about this application. Fees transmitted by check or draft are subject to collection. Please verify the accuracy of the data presented on this receipt. **If an error is noted on this Filing Receipt, please mail to the Commissioner for Patents P.O. Box 1450 Alexandria Va 22313-1450. Please provide a copy of this Filing Receipt with the changes noted thereon. If you received a "Notice to File Missing Parts" for this application, please submit any corrections to this Filing Receipt with your reply to the Notice. When the USPTO processes the reply to the Notice, the USPTO will generate another Filing Receipt incorporating the requested corrections (if appropriate).**

Applicant(s)

Michael Schaaf, Shenzhen, CHINA;
Johann Schuster, Oberasbach, GERMANY;
Stefan Stocker, Grossenseebach, GERMANY;

Power of Attorney:

Daniel Staudt–34733
Erik Swanson–40194
Terrence Brennan–42360
John Musone–44961

Domestic Priority data as claimed by applicant

Foreign Applications

GERMANY 10 2004 012 248.2 03/12/2004

If Required, Foreign Filing License Granted: 05/04/2005

The country code and number of your priority application, to be used for filing abroad under the Paris Convention, is US11/076,743

Projected Publication Date: 11/03/2005

Non-Publication Request: No

Early Publication Request: No

Title

Magnetic resonance tomograph

Preliminary Class

324

PROTECTING YOUR INVENTION OUTSIDE THE UNITED STATES

Since the rights granted by a U.S. patent extend only throughout the territory of the United States and have no effect in a foreign country, an inventor who wishes patent protection in another country must apply for a patent in a specific country or in regional patent offices. Applicants may wish to consider the filing of an international application under the Patent Cooperation Treaty (PCT). An international (PCT) application generally has the same effect as a regular national patent application in each PCT-member country. The PCT process **simplifies** the filing of patent applications on the same invention in member countries, but **does not result** in a grant of "an international patent" and does not eliminate the need of applicants to file additional documents and fees in countries where patent protection is desired.

Almost every country has its own patent law, and a person desiring a patent in a particular country must make an application for patent in that country in accordance with its particular laws. Since the laws of many countries differ in various respects from the patent law of the United States, applicants are advised to seek guidance from specific foreign countries to ensure that patent rights are not lost prematurely.

Applicants also are advised that in the case of inventions made in the United States, the Director of the USPTO must issue a license before applicants can apply for a patent in a foreign country. The filing of a U.S. patent application serves as a request for a foreign filing license. The application's filing receipt contains further information and guidance as to the status of applicant's license for foreign filing.

Applicants may wish to consult the USPTO booklet, "General Information Concerning Patents" (specifically, the section entitled "Treaties and Foreign Patents") for more information on timeframes and deadlines for filing foreign patent applications. The guide is available either by contacting the USPTO Contact Center at 800-786-9199, or it can be viewed on the USPTO website at http://www.uspto.gov/web/offices/pac/doc/general/index.html.

LICENSE FOR FOREIGN FILING UNDER
Title 35, United States Code, Section 184
Title 37, Code of Federal Regulations, 5.11 & 5.15

GRANTED

The applicant has been granted a license under 35 U.S.C. 184, if the phrase "IF REQUIRED, FOREIGN FILING LICENSE GRANTED" followed by a date appears on this form. Such licenses are issued in all applications where the conditions for issuance of a license have been met, regardless of whether or not a license may be required as set forth in 37 CFR 5.15. The scope and limitations of this license are set forth in 37 CFR 5.15(a) unless an earlier license has been issued under 37 CFR 5.15(b). The license is subject to revocation upon written notification. The date indicated is the effective date of the license, unless an earlier license of similar scope has been granted under 37 CFR 5.13 or 5.14.

This license is to be retained by the licensee and may be used at any time on or after the effective date thereof unless it is revoked. This license is automatically transferred to any related applications(s) filed under 37 CFR 1.53(d). This license is not retroactive.

The grant of a license does not in any way lessen the responsibility of a licensee for the security of the subject matter as imposed by any Government contract or the provisions of existing laws relating to espionage and the national security or the export of technical data. Licensees should apprise themselves of current regulations especially with respect to certain countries, of other agencies, particularly the Office of Defense Trade Controls, Department of State (with respect to Arms, Munitions and Implements of War (22 CFR 121-128)); the Office of Export Administration, Department of Commerce (15 CFR 370.10 (j)); the Office of Foreign Assets Control, Department of Treasury (31 CFR Parts 500+) and the Department of Energy.

NOT GRANTED

No license under 35 U.S.C. 184 has been granted at this time, if the phrase "IF REQUIRED, FOREIGN FILING LICENSE GRANTED" DOES NOT appear on this form. Applicant may still petition for a license under 37 CFR 5.12, if a license is desired before the expiration of 6 months from the filing date of the application. If 6 months has lapsed from the filing date of this application and the licensee has not received any indication of a secrecy order under 35 U.S.C. 181, the licensee may foreign file the application pursuant to 37 CFR 5.15(b).

UNITED STATES PATENT AND TRADEMARK OFFICE

UNITED STATES DEPARTMENT OF COMMERCE
United States Patent and Trademark Office
Address: COMMISSIONER FOR PATENTS
P.O. Box 1450
Alexandria, Virginia 22313-1450
www.uspto.gov

APPL NO.	FILING OR 371 (c) DATE	ART UNIT	FIL FEE REC'D	ATTY.DOCKET NO	DRAWINGS	TOT CLMS	IND CLMS
11/076,744	03/10/2005	2882	1000	2004P02732US	3	13	3

CONFIRMATION NO. 5196

SIEMENS CORPORATION
INTELLECTUAL PROPERTY DEPARTMENT
170 WOOD AVENUE SOUTH
ISELIN, NJ 08830

CORRECTED FILING RECEIPT

OC000000016619123

Date Mailed: 07/27/2005

Receipt is acknowledged of this regular Patent Application. It will be considered in its order and you will be notified as to the results of the examination. Be sure to provide the U.S. APPLICATION NUMBER, FILING DATE, NAME OF APPLICANT, and TITLE OF INVENTION when inquiring about this application. Fees transmitted by check or draft are subject to collection. Please verify the accuracy of the data presented on this receipt. **If an error is noted on this Filing Receipt, please mail to the Commissioner for Patents P.O. Box 1450 Alexandria Va 22313-1450. Please provide a copy of this Filing Receipt with the changes noted thereon. If you received a "Notice to File Missing Parts" for this application, please submit any corrections to this Filing Receipt with your reply to the Notice. When the USPTO processes the reply to the Notice, the USPTO will generate another Filing Receipt incorporating the requested corrections (if appropriate).**

Applicant(s)

Burkhard Groh, Chicago, IL;
Mathias Hornig, Erlangen, GERMANY;
Bernhard Sandkamp, Erlangen, GERMANY;

Assignment For Published Patent Application

Siemens Aktiengesellschaft

Power of Attorney:

Daniel Staudt–34733
Erik Swanson–40194
Terrence Brennan–42360
John Musone–44961

Domestic Priority data as claimed by applicant

Foreign Applications

GERMANY 10 2004 012 050.1 03/11/2004

If Required, Foreign Filing License Granted: 04/11/2005

The country code and number of your priority application, to be used for filing abroad under the Paris Convention, is US11/076,744

Projected Publication Date: 09/15/2005

Non-Publication Request: No

Early Publication Request: No

Title

Diaphragm unit for an x-ray device

Preliminary Class

378

PROTECTING YOUR INVENTION OUTSIDE THE UNITED STATES

Since the rights granted by a U.S. patent extend only throughout the territory of the United States and have no effect in a foreign country, an inventor who wishes patent protection in another country must apply for a patent in a specific country or in regional patent offices. Applicants may wish to consider the filing of an international application under the Patent Cooperation Treaty (PCT). An international (PCT) application generally has the same effect as a regular national patent application in each PCT-member country. The PCT process **simplifies** the filing of patent applications on the same invention in member countries, but **does not result** in a grant of "an international patent" and does not eliminate the need of applicants to file additional documents and fees in countries where patent protection is desired.

Almost every country has its own patent law, and a person desiring a patent in a particular country must make an application for patent in that country in accordance with its particular laws. Since the laws of many countries differ in various respects from the patent law of the United States, applicants are advised to seek guidance from specific foreign countries to ensure that patent rights are not lost prematurely.

Applicants also are advised that in the case of inventions made in the United States, the Director of the USPTO must issue a license before applicants can apply for a patent in a foreign country. The filing of a U.S. patent application serves as a request for a foreign filing license. The application's filing receipt contains further information and guidance as to the status of applicant's license for foreign filing.

Applicants may wish to consult the USPTO booklet, "General Information Concerning Patents" (specifically, the section entitled "Treaties and Foreign Patents") for more information on timeframes and deadlines for filing foreign patent applications. The guide is available either by contacting the USPTO Contact Center at 800-786-9199, or it can be viewed on the USPTO website at http://www.uspto.gov/web/offices/pac/doc/general/index.html.

LICENSE FOR FOREIGN FILING UNDER
Title 35, United States Code, Section 184
Title 37, Code of Federal Regulations, 5.11 & 5.15

GRANTED

The applicant has been granted a license under 35 U.S.C. 184, if the phrase "IF REQUIRED, FOREIGN FILING LICENSE GRANTED" followed by a date appears on this form. Such licenses are issued in all applications where the conditions for issuance of a license have been met, regardless of whether or not a license may be required as set forth in 37 CFR 5.15. The scope and limitations of this license are set forth in 37 CFR 5.15(a) unless an earlier license has been issued under 37 CFR 5.15(b). The license is subject to revocation upon written notification. The date indicated is the effective date of the license, unless an earlier license of similar scope has been granted under 37 CFR 5.13 or 5.14.

This license is to be retained by the licensee and may be used at any time on or after the effective date thereof unless it is revoked. This license is automatically transferred to any related applications(s) filed under 37 CFR 1.53(d). This license is not retroactive.

The grant of a license does not in any way lessen the responsibility of a licensee for the security of the subject matter as imposed by any Government contract or the provisions of existing laws relating to espionage and the national security or the export of technical data. Licensees should apprise themselves of current regulations especially with respect to certain countries, of other agencies, particularly the Office of Defense Trade Controls, Department of State (with respect to Arms, Munitions and Implements of War (22 CFR 121-128)); the Office of Export Administration, Department of Commerce (15 CFR 370.10 (j)); the Office of Foreign Assets Control, Department of Treasury (31 CFR Parts 500+) and the Department of Energy.

NOT GRANTED

No license under 35 U.S.C. 184 has been granted at this time, if the phrase "IF REQUIRED, FOREIGN FILING LICENSE GRANTED" DOES NOT appear on this form. Applicant may still petition for a license under 37 CFR 5.12, if a license is desired before the expiration of 6 months from the filing date of the application. If 6 months has lapsed from the filing date of this application and the licensee has not received any indication of a secrecy order under 35 U.S.C. 181, the licensee may foreign file the application pursuant to 37 CFR 5.15(b).

UNITED STATES PATENT AND TRADEMARK OFFICE

UNITED STATES DEPARTMENT OF COMMERCE
United States Patent and Trademark Office
Address: COMMISSIONER FOR PATENTS
P.O. Box 1450
Alexandria, Virginia 22313-1450
www.uspto.gov

APPL NO.	FILING OR 371 (c) DATE	ART UNIT	FIL FEE REC'D	ATTY.DOCKET NO	DRAWINGS	TOT CLMS	IND CLMS
11/076,745	03/10/2005	2642	1130	2004P01950US	5	13	3

CONFIRMATION NO. 5192

CORRECTED FILING RECEIPT

OC000000016431593

SIEMENS CORPORATION
INTELLECTUAL PROPERTY DEPARTMENT
170 WOOD AVENUE SOUTH
ISELIN, NJ 08830

Date Mailed: 07/01/2005

Receipt is acknowledged of this regular Patent Application. It will be considered in its order and you will be notified as to the results of the examination. Be sure to provide the U.S. APPLICATION NUMBER, FILING DATE, NAME OF APPLICANT, and TITLE OF INVENTION when inquiring about this application. Fees transmitted by check or draft are subject to collection. Please verify the accuracy of the data presented on this receipt. **If an error is noted on this Filing Receipt, please mail to the Commissioner for Patents P.O. Box 1450 Alexandria Va 22313-1450. Please provide a copy of this Filing Receipt with the changes noted thereon. If you received a "Notice to File Missing Parts" for this application, please submit any corrections to this Filing Receipt with your reply to the Notice. When the USPTO processes the reply to the Notice, the USPTO will generate another Filing Receipt incorporating the requested corrections (if appropriate).**

Applicant(s)

Wilhelm Aures, Munchen, GERMANY;
Gunnar Lowe, Landsberg am Lech, GERMANY;
Hanns Jurgen Schwarzbauer, Grobenzell, GERMANY;
Gert Serroyen, Schelle, BELGIUM;
Gery Verwimp, Borgerhout, BELGIUM;

Power of Attorney:

Daniel Staudt--34733
Erik Swanson--40194
Terrence Brennan--42360
John Musone--44961

Domestic Priority data as claimed by applicant

Foreign Applications

EUROPEAN PATENT OFFICE (EPO) 04005973.5 03/12/2004

If Required, Foreign Filing License Granted: 04/11/2005

The country code and number of your priority application, to be used for filing abroad under the Paris Convention, is US11/076,745

Projected Publication Date: 10/06/2005

Non-Publication Request: No

Early Publication Request: No

Title

Telephone number portability method and apparatus

Preliminary Class

379

PROTECTING YOUR INVENTION OUTSIDE THE UNITED STATES

Since the rights granted by a U.S. patent extend only throughout the territory of the United States and have no effect in a foreign country, an inventor who wishes patent protection in another country must apply for a patent in a specific country or in regional patent offices. Applicants may wish to consider the filing of an international application under the Patent Cooperation Treaty (PCT). An international (PCT) application generally has the same effect as a regular national patent application in each PCT-member country. The PCT process **simplifies** the filing of patent applications on the same invention in member countries, but **does not result** in a grant of "an international patent" and does not eliminate the need of applicants to file additional documents and fees in countries where patent protection is desired.

Almost every country has its own patent law, and a person desiring a patent in a particular country must make an application for patent in that country in accordance with its particular laws. Since the laws of many countries differ in various respects from the patent law of the United States, applicants are advised to seek guidance from specific foreign countries to ensure that patent rights are not lost prematurely.

Applicants also are advised that in the case of inventions made in the United States, the Director of the USPTO must issue a license before applicants can apply for a patent in a foreign country. The filing of a U.S. patent application serves as a request for a foreign filing license. The application's filing receipt contains further information and guidance as to the status of applicant's license for foreign filing.

Applicants may wish to consult the USPTO booklet, "General Information Concerning Patents" (specifically, the section entitled "Treaties and Foreign Patents") for more information on timeframes and deadlines for filing foreign patent applications. The guide is available either by contacting the USPTO Contact Center at 800-786-9199, or it can be viewed on the USPTO website at http://www.uspto.gov/web/offices/pac/doc/general/index.html.

LICENSE FOR FOREIGN FILING UNDER
Title 35, United States Code, Section 184
Title 37, Code of Federal Regulations, 5.11 & 5.15

GRANTED

The applicant has been granted a license under 35 U.S.C. 184, if the phrase "IF REQUIRED, FOREIGN FILING LICENSE GRANTED" followed by a date appears on this form. Such licenses are issued in all applications where the conditions for issuance of a license have been met, regardless of whether or not a license may be required as set forth in 37 CFR 5.15. The scope and limitations of this license are set forth in 37 CFR 5.15(a) unless an earlier license has been issued under 37 CFR 5.15(b). The license is subject to revocation upon written notification. The date indicated is the effective date of the license, unless an earlier license of similar scope has been granted under 37 CFR 5.13 or 5.14.

This license is to be retained by the licensee and may be used at any time on or after the effective date thereof

unless it is revoked. This license is automatically transferred to any related applications(s) filed under 37 CFR 1.53(d). This license is not retroactive.

The grant of a license does not in any way lessen the responsibility of a licensee for the security of the subject matter as imposed by any Government contract or the provisions of existing laws relating to espionage and the national security or the export of technical data. Licensees should apprise themselves of current regulations especially with respect to certain countries, of other agencies, particularly the Office of Defense Trade Controls, Department of State (with respect to Arms, Munitions and Implements of War (22 CFR 121-128)); the Office of Export Administration, Department of Commerce (15 CFR 370.10 (j)); the Office of Foreign Assets Control, Department of Treasury (31 CFR Parts 500+) and the Department of Energy.

NOT GRANTED

No license under 35 U.S.C. 184 has been granted at this time, if the phrase "IF REQUIRED, FOREIGN FILING LICENSE GRANTED" DOES NOT appear on this form. Applicant may still petition for a license under 37 CFR 5.12, if a license is desired before the expiration of 6 months from the filing date of the application. If 6 months has lapsed from the filing date of this application and the licensee has not received any indication of a secrecy order under 35 U.S.C. 181, the licensee may foreign file the application pursuant to 37 CFR 5.15(b).

UNITED STATES PATENT AND TRADEMARK OFFICE

UNITED STATES DEPARTMENT OF COMMERCE
United States Patent and Trademark Office
Address: COMMISSIONER FOR PATENTS
P.O. Box 1450
Alexandria, Virginia 22313-1450
www.uspto.gov

APPLICATION NO.	FILING DATE	FIRST NAMED INVENTOR	ATTORNEY DOCKET NO.	CONFIRMATION NO.
11/076,748	03/10/2005	Ullas Gargi	10006284-1	5202

7590 04/18/2008
HEWLETT PACKARD COMPANY
P O BOX 272400, 3404 E. HARMONY ROAD
INTELLECTUAL PROPERTY ADMINISTRATION
FORT COLLINS, CO 80527-2400

EXAMINER
GE, YUZHEN

ART UNIT	PAPER NUMBER
2624	

NOTIFICATION DATE	DELIVERY MODE
04/18/2008	ELECTRONIC

DECISION GRANTING PETITION UNDER 37 CFR 1.138(d)

The declaration of express abandonment is recognized

This is in response to the petition under 37 CFR 1.138(d), requesting for a refund of any previously paid search fee and excess claims fee in the above-identified application.

The petition is granted.

The express abandonment is recognized. Any previously paid search fee and excess claims fee are hereby refunded.

Telephone inquiries should be directed to the Office of Data Management at (571) 272-4200.

Patent Publication Branch
Office of Data Management

Adjustment date: 04/21/2008 DTERRY
03/15/2005 AADDF01 00000089 082025 11076748
02 FC:1111 500.00 CR
04 FC:1202 200.00 CR

FORM PET651G (Rev. 08/07)

UNITED STATES PATENT AND TRADEMARK OFFICE

Commissioner for Patents
United States Patent and Trademark Office
P.O. Box 1450
Alexandria, VA 22313-1450
www.uspto.gov

CONNOLLY BOVE LODGE & HUTZ LLP
1875 EYE STREET, N.W.
SUITE 1100
WASHINGTON, DC 20036

COPY MAILED

JUL 0 3 2008

OFFICE OF PETITIONS

In re Application of :
Yeheskel Bar-ness et al :
Application No. 11/076,751 :
Filed: March 10, 2005 :
Attorney Docket No. 27592-00241-US2 :

ON PETITION

This is a decision on the petition filed March 20, 2008 under 37 CFR 1.137(b), to revive the above-identified application and a petition filed March 20, 2008 requesting that status as a Small Entity be removed.

The petition under 37 CFR 1.137(b) is **GRANTED.**

The above-identified application became abandoned for failure to submit the Issue fee and Publication fee in a timely manner in reply to the Notice of Allowance mailed November 29, 2007, which set a statutory period for reply of three (3) months. Accordingly, the above-identified application became abandoned on March 1, 2008.

The petition satisfies the conditions for revival pursuant to the provisions of 37 CFR 1.137(b) in that (1) the reply in the form of payment of the Issue fee and Publication fee; (2) the petition fee; and (3) the required statement of unintentional delay have been received. Accordingly, the issue fee is accepted as having been unintentionally delayed.

The petition under 37 CFR 1.28(g)(2) is **GRANTED.**

This is in response to the paper filed March 20, 2008, which is being treated under 37 CFR 1.28(g)(2) requesting that status as a Small Entity be removed.

In accordance with the March 20, 2008 request, status as a Small Entity has been removed.

Telephone inquiries concerning this decision should be directed to the undersigned at (571) 272-3210. This matter is being referred to the Office of Data Management for further processing.

Irvin Dingle
Petitions Examiner
Office of Petitions

UNITED STATES PATENT AND TRADEMARK OFFICE

Commissioner for Patents
United States Patent and Trademark Office
P.O. Box 1450
Alexandria, VA 22313-1450
www.uspto.gov

MARSHALL, GERSTEIN & BORUN LLP
233 S. WACKER DRIVE, SUITE 6300
SEARS TOWER
CHICAGO, IL 60606

COPY MAILED

JUN 0 6 2005

OFFICE OF PETITIONS

In re Application of :
Noh Yeal Kwak :
Application No. 11/076,759 :
Filed: March 10, 2005 :
Attorney Docket No. 29936/39431A :

DECISION GRANTING PETITION

This is a decision on the petition filed April 20, 2005, requesting that the above-identified application retain the presently accorded a filing date of March 10, 2005, with Figures 2 and 4, as described in the specification, as part of the original disclosure.

On March 10, 2005, the above-identified application was filed. On April 8, 2005, the Office of Initial Patent Examination mailed a "Notice of Omitted Items of Nonprovisional Application" (the "Notice"), stating that the application had been accorded a filing date of March 10, 2005, however, Figures 2 and 4 as described in the specification appeared to have been omitted. The Notice allowed a non-extendable two-month period for reply beginning from the mailing date of the Notice.

In response, on April 20, 2005, applicants filed the present petition and a copy of an Office date-stamped postcard showing that, among other items, seven sheets of drawings were received on March 10, 2005.

Upon review of the record, Figures 2 and 4 have not been located among the application papers. However, the evidence is convincing that the application papers deposited March1 0, 2005, included Figures 2 and 4, which were subsequently misplaced by the Office. Therefore, the application, including Figures 2 and 4 as described in the specification was complete on filing and entitled to the presently accorded filing date of March 10, 2005.

Accordingly, the petition is granted; the Notice is vacated, accordingly. The petition fee of $400.00 will be refunded in duce course.

The application file is being returned to the Office of Initial Patent Examination for further processing with the presently accorded filing date of March10, 2005, including Figures 2 and 4 received in duplicate on April 20, 2005.

Any inquiries related to this decision should be directed to the undersigned at (571)272-3222.

Kenya A. McLaughlin
Petitions Attorney
Office of Petitions

UNITED STATES PATENT AND TRADEMARK OFFICE

UNITED STATES DEPARTMENT OF COMMERCE
United States Patent and Trademark Office
Address: COMMISSIONER FOR PATENTS
P.O. Box 1450
Alexandria, Virginia 22313-1450
www.uspto.gov

PATTON BOGGS LLP
1801 CALFORNIA STREET
SUITE 4900
DENVER, CO 80202

Mail Date: 04/21/2010

Applicant	: Ofer Sneh	: DECISION ON REQUEST FOR
Patent Number	: 7635502	: RECALCULATION of PATENT
Issue Date	: 12/22/2009	: TERM ADJUSTMENT IN VIEW
Appliction No	: 11/076,772	: OF WYETH AND NOTICE OF INTENT TO
Filed	: 03/10/2005	: ISSUE CERTIFICATE OF CORRECTION
		:

The Request for Recalculation is **GRANTED** to the extent indicated.

The patent term adjustment has been determined to be **1102** days. The USPTO will *sua sponte* issue a certificate of correction reflecting the amount of PTA days determined by the recalculation.

Prior to the issuance of the certificate of correction, the USPTO will afford patentee an opportunity to be heard and request reconsideration. Accordingly, patentee has **one month or thirty (30) days**, whichever is longer, to file a request for reconsideration of this patent term adjustment calculation. See 35 U.S.C. 154(b)(3)(B)(ii) and 37 CFR 1.322(a)(4). No extensions of time will be granted under 37 CFR 1.136.

Patentee should use document code PET.OP if electronically filing a request for reconsideration of this patent term adjustment calculation. The patentee must also include the information required by 37 CFR 1.705(b)(2) and the fee required by 37 CFR 1.18(e). If patentee does not file a timely request for reconsideration of this patent term adjustment calculation including the information required by 37 CFR 1.705(b)(2) and the fee required by 37 CFR 1.18(e), the USPTO will issue a certificate of correction reflecting the PTA determination noted above.

Patentee should be aware that in order to preserve the right to review in the United States District Court for the District of Columbia of the USPTO patent term adjustment determination, patentee must ensure that he or she also take the steps required under 35 U.S.C. 154(b)(4)(A) in a timely manner. Nothing in the request for recalculation should be construed as providing an alternative time frame for commencing a civil action under 35 U.S.C. 154(b)(4)(A).

Any questions concerning this decision should be directed to the Office of Patent Legal Administration at 571-272-7702.

UNITED STATES PATENT AND TRADEMARK OFFICE

Commissioner for Patents
United States Patent and Trademark Office
P.O. Box 1450
Alexandria, VA 22313-1450
www.uspto.gov

Paper No.

COPY MAILED

SEP 17 2007

OFFICE OF PETITIONS

FISH & RICHARDSON P.C.
P.O BOX 1022
MINNEAPOLIS MN 55440-1022

In re Patent No. 7,179,922	:	DECISION ON REQUEST
Rigby et al.	:	FOR RECONSIDERATION OF
Issue Date: February 20, 2007	:	PATENT TERM ADJUSTMENT
Application No. 11/076,773	:	and
Filed: March 10, 2005	:	NOTICE OF INTENT TO ISSUE
Atty Docket No. 06275-230004	:	CERTIFICATE OF CORRECTION
/100043-4	:	

This is a decision on the "REQUEST FOR RECONSIDERATION OF PATENT TERM ADJUSTMENT" filed April 6, 2007. Patentees request that that Patent Term Adjustment for the above-identified patent be corrected from twenty-six (26) days to twenty-seven (27) days.

The request for reconsideration of the patent term adjustment indicated in the patent is **GRANTED**.

The patent term adjustment indicated in the patent is to be corrected by issuance of a certificate of correction showing a revised Patent Term Adjustment of TWENTY-SEVEN (27) days.

On February 20, 2007, the above-identified application matured into U.S. Patent No. 7,179,922. The instant request for reconsideration filed April 6, 2007 was timely filed within 2 months of the date the patent issued. See § 1.705(d). The Patent issued with a revised Patent Term Adjustment of 26 days. Patentees dispute the reduction of 1 day associated with the filing of a request for foreign priority. In effect, patentees maintain that no paper warranting such a reduction was filed.

Patentees' contention is well taken. The record supports a conclusion that patentee did not file a request for foreign priority or submit priority papers (or filing any other papers, other than payment of the issue fee) after the mailing of the Notice of Allowance. Accordingly, the reduction of 1 day

entered pursuant to 37 CFR 1.704(c)(10) is not warranted and is being removed.

It is further noted that the record supports a conclusion that the amendment filed November 15, 2006 was expressly requested by the examiner. Accordingly, no request pursuant to 37 CFR 1.704(c)(8) was entered.

In view thereof, the patent term adjustment indicated on the patent should be TWENTY-SEVEN (27) days.

The Office acknowledges submission of the $200.00 fee set forth in 37 CFR 1.18(e). No additional fees are required.

The application file is being forwarded to the Certificates of Correction Branch for issuance of a certificate of correction in order to rectify this error. The Office will issue a certificate of correction indicating that the term of the above-identified patent is extended or adjusted by TWENTY-SEVEN (27) days.

Telephone inquiries specific to this matter should be directed to the undersigned at (571) 272-3219.

Nancy Johnson
Senior Petitions Attorney
Office of Petitions

Enclosure: Copy of DRAFT Certificate of Correction

UNITED STATES PATENT AND TRADEMARK OFFICE

CERTIFICATE OF CORRECTION

PATENT : 7,179,922 B2

DATED : February 20, 2007

INVENTOR(S) : Rigby et al.

DRAFT

It is certified that error appears in the above-identified patent and that said Letters Patent is hereby corrected as shown below:

On the cover page,

[*] Notice: Subject to any disclaimer, the term of this patent is extended or adjusted under 35 USC 154(b) by (26) days

Delete the phrase "by 26" and insert – by 27 days--

UNITED STATES PATENT AND TRADEMARK OFFICE

COMMISSIONER FOR PATENTS
UNITED STATES PATENT AND TRADEMARK OFFICE
P.O. BOX 1450
ALEXANDRIA, VA 22313-1450
www.uspto.gov

CIRRUS LOGIC, INC.
2901 VIA FORTUNA
Austin, TX 76746

COPY MAILED

FEB 06 2006

OFFICE OF PETITIONS

In re Application of :
Clinton R. Wolff, et. al. :
Application No. 11/076,790 :
Filed: March 9, 2005 :
Attorney Docket No. 1527-CA :

ON PETITION

This is a decision on the petition under 37 CFR 1.137(b), on November 21, 2005, to revive the above-identified application.

The application became abandoned for failure to respond to the Notice of Allowance and Fee(s) Due mailed August 8, 2005.

The petition satisfies the requirements of 37 CFR 1.137(b) in that petitioner has supplied (1) the reply in the form of $1,400 for payment of the issue fee and $300 for payment of the publication fee; (2) the petition fee of $1,500; and (3) an adequate statement of unintentional delay. Therefore, the petition is **GRANTED**.

The Change of Correspondence Address filed on November 21, 2005, has been made of record. However, it is noted that the address on the petition differs from the new address of record. Therefore, a courtesy copy of this decision is being mailed to the address on the petition. All future correspondence regarding this application will be directed solely to the address of record until otherwise instructed.

This application file is being referred to the Office of Publications for processing into a patent.

Telephone inquiries concerning this decision should be directed to the undersigned at (571) 272-3226.

Andrea Smith
Petitions Examiner
Office of Petitions

cc: Da Shifrin
14081 West 59th Avenue
Arvada, CO 80004

UNITED STATES PATENT AND TRADEMARK OFFICE

COMMISSIONER FOR PATENTS
UNITED STATES PATENT AND TRADEMARK OFFICE
P.O. BOX 1450
ALEXANDRIA, VA 22313-1450
www.uspto.gov

PENG CHEN
MORRISON & FOERSTER LLP
12531 HIGH BLUFF DRIVE
SUITE 100
SAN DIEGO, CA 92130

COPY MAILED

MAY 24 2006

OFFICE OF PETITIONS

In re Application of	:	
Hans-Joerg Buehring, et al.	:	
Application No. 11/076,793	:	DECISION ON REQUEST
Filed: March 9, 2005	:	TO WITHDRAW
Attorney Docket No. 584212000801	:	FROM RECORD
	:	

This is a decision on the Request to Withdraw as attorney or agent of record under 37 CFR §1.36(b), filed December 1, 2005.

The request is **NOT APPROVED** as moot.

A review of the file record indicates that the power of attorney to Peng Chen and all the attorneys/agents of record has been revoked by the assignee of the patent application on January 10, 2006. Accordingly, the request to withdraw under 37 CFR §1.36(b) is moot.

All future communications from the Office will continue to be directed to the below-listed address until otherwise notified by applicant.

Telephone inquires concerning this decision should be directed to Sherry D. Brinkley at 571-272- 3204.

Sherry D. Brinkley
Petitions Examiner
Office of Petitions

Conferee:

cc: KLARQUIST SPARKMAN, LLP
121 SW SALMON STREET
SUITE 1600
PORTLAND OR 97204

UNITED STATES PATENT AND TRADEMARK OFFICE

UNITED STATES DEPARTMENT OF COMMERCE
United States Patent and Trademark Office
Address: COMMISSIONER FOR PATENTS
P.O. Box 1450
Alexandria, Virginia 22313-1450
www.uspto.gov

XILINX, INC
ATTN: LEGAL DEPARTMENT
2100 LOGIC DR
SAN JOSE, CA 95124

Mail Date: 04/21/2010

Applicant	: Paul R. Schumacher	: DECISION ON REQUEST FOR
Patent Number	: 7669037	: RECALCULATION of PATENT
Issue Date	: 02/23/2010	: TERM ADJUSTMENT IN VIEW
Appliction No	: 11/076,797	: OF WYETH AND NOTICE OF INTENT TO
Filed	: 03/10/2005	: ISSUE CERTIFICATE OF CORRECTION
		:

The Request for Recalculation is **GRANTED** to the extent indicated.

The patent term adjustment has been determined to be **369** days. The USPTO will *sua sponte* issue a certificate of correction reflecting the amount of PTA days determined by the recalculation.

Prior to the issuance of the certificate of correction, the USPTO will afford patentee an opportunity to be heard and request reconsideration. Accordingly, patentee has **one month or thirty (30) days**, whichever is longer, to file a request for reconsideration of this patent term adjustment calculation. See 35 U.S.C. 154(b)(3)(B)(ii) and 37 CFR 1.322(a)(4). No extensions of time will be granted under 37 CFR 1.136.

Patentee should use document code PET.OP if electronically filing a request for reconsideration of this patent term adjustment calculation. The patentee must also include the information required by 37 CFR 1.705(b)(2) and the fee required by 37 CFR 1.18(e). If patentee does not file a timely request for reconsideration of this patent term adjustment calculation including the information required by 37 CFR 1.705(b)(2) and the fee required by 37 CFR 1.18(e), the USPTO will issue a certificate of correction reflecting the PTA determination noted above.

Patentee should be aware that in order to preserve the right to review in the United States District Court for the District of Columbia of the USPTO patent term adjustment determination, patentee must ensure that he or she also take the steps required under 35 U.S.C. 154(b)(4)(A) in a timely manner. Nothing in the request for recalculation should be construed as providing an alternative time frame for commencing a civil action under 35 U.S.C. 154(b)(4)(A).

Any questions concerning this decision should be directed to the Office of Patent Legal Administration at 571-272-7702.

UNITED STATES PATENT AND TRADEMARK OFFICE

Commissioner for Patents
United States Patent and Trademark Office
P.O. Box 1450
Alexandria, VA 22313-1450
www.uspto.gov

Hamilton, Brook, Smith & Reynolds, P.C.
530 Virginia Road
P.O. Box 9133
Concord, MA 01742-9133

COPY MAILED

JUN 1 8 2007

OFFICE OF PETITIONS

In re Application of	:	
Howard A. Heller et al.	:	
Application No. 11/076,807	:	DECISION ON PETITION
Filed: March 10, 2005	:	TO WITHDRAW
Attorney Docket No. 2479.2136-011	:	FROM RECORD
	:	

This is a decision on the Request to Withdraw as attorney or agent of record under 37 C.F.R. § 1.36(b), filed November 22, 2006.

The request is **NOT APPROVED** as moot.

A review of the file record indicates that the power of attorney to Hamilton, Brook, Smith & Reynolds, P.C. has been revoked by the assignee of the patent application on January 4, 2007. Accordingly, the request to withdraw under 37 C.F.R. § 1.36(b) is moot.

All future communications from the Office will continue to be directed to the below-listed address until otherwise notified by applicant.

Telephone inquires concerning this decision should be directed to Terri Williams at 571-272-2991.

Terri Williams
Terri Williams
Petitions Examiner
Office of Petitions

cc: **Volpe and Koeing, P.C.**
Dept. ICC
United Plaza, Suite 1600
30 South 17th Street
Philadelphia, PA 19103

SPE RESPONSE FOR CERTIFICATE OF CORRECTION

Paper No.: _____

DATE : 2/28/08

TO SPE OF : ART UNIT 1648

SUBJECT : Request for Certificate of Correction on Patent No.: 7285278

A response is requested with respect to the accompanying request for a certificate of correction.

Please complete this form and return with file, within 7 days to:
Palm location **7580, Certificates of Correction Branch – South Tower – 9A22**
If response is for an IFW, **return to employee (named below) via PUBSCofC Team in MADRAS.**
With respect to the change(s) requested, correcting Office and/or Applicant's errors, should the patent read as shown in the certificate of correction (COCIN)? No new matter should be introduced, nor should the scope or meaning of the claims be changed.

Valerie Jackson

Thank You For Your Assistance

Certificates of Correction Branch
Tel. No. 703-308-9390 ext. 114

The request for issuing the above-identified correction(s) is hereby:
Note your decision on the appropriate box.

- ☐ **Approved** — All changes apply.
- ☐ **Approved in Part** — Specify below which changes **do not** apply.
- ☒ **Denied** — State the reasons for denial below.

Comments:
Applicant seeks to correct claims 11 & 12, but the patent has only 9 claims.

BRUCE R. CAMPELL, PH.D
SUPERVISORY PATENT EXAMINER
TECHNOLOGY CENTER 1600

Bruce Campell — SPE

1648 — Art Unit

UNITED STATES PATENT AND TRADEMARK OFFICE

Commissioner for Patents
United States Patent and Trademark Office
P.O. Box 1450
Alexandria, VA 22313-1450
www.uspto.gov

WORKMAN NYDEGGER
(F/K/A WORKMAN NYDEGGER & SEELEY)
60 EAST SOUTH TEMPLE
1000 EAGLE GATE TOWER
SALT LAKE CITY UT 84111

COPY MAILED

OCT 2 5 2005

OFFICE OF PETITIONS

In re Application of	:	
Wisecarver and Mehnert	:	DECISION ACCORDING STATUS
Application No. 11/076,835	:	UNDER 37 CFR 1.47(a)
Filed: March 10, 2005	:	
Attorney Docket Number: 15436.354.1	:	

This is in response to the petition under 37 CFR 1.47(a), filed on September 20, 2005. Applicant obtained an extension of time for response within the third month. According, the petition is filed timely.

The petition is granted.

Applicant showed that Martin Wisecarver, the non-signing inventor, could not be reached to sign the declaration after having been presented with the application papers (specification, claims and drawings). Specifically, the Declaration of Facts of Fraser D. Roy indicated applicant sent a copy of the application papers to the non-signing inventor at both his corporate and personal email addresses; however, the inventor did not respond. Additionally, Mr. Roy attempted to call the inventor at his last known telephone number. The woman who answered the call stated that Mr. Wisecarver was in Singapore and that she did not know his new address, telephone number, or if and when he would return. Applicant enclosed copies of the email correspondence to the non-signing inventor.

The above-identified application and papers have been reviewed and found in compliance with 37 CFR 1.47(a). This application is hereby accorded Rule 1.47(a) status. As provided in Rule 1.47(c), this Office will forward notice of this application's filing to the non-signing inventor at the address given in the present petition. Notice of the filing of this application will also be published in the Official Gazette.

The matter is being referred to Technology Center Art Unit 2874 for examination in due course.

Telephone inquiries regarding this decision should be directed to the undersigned at (571) 272-3211.

Christina Tartera Donnell

Christina Tartera Donnell
Senior Petitions Attorney
Office of Petitions

UNITED STATES PATENT AND TRADEMARK OFFICE

Commissioner for Patents
United States Patent and Trademark Office
P.O. Box 1450
Alexandria, VA 22313-1450
www.uspto.gov

WORKMAN NYDEGGER
(F/K/A WORKMAN NYDEGGER & SEELEY)
60 EAST SOUTH TEMPLE
1000 EAGLE GATE TOWER
SALT LAKE CITY UT 84111

COPY MAILED

OCT 2 5 2005

OFFICE OF PETITIONS

In re Application of	:	
Wisecarver and Mehnert	:	LETTER
Application No. 11/076,835	:	
Filed: March 10, 2005	:	
Attorney Docket Number: 15436.354.1	:	

Dear Mr. Wisecarver:

You are named as a joint inventor in the above-identified United States patent application filed under the provisions of 35 U.S.C. 116 (United States Code) and 37 CFR 1.47(a), Rules of Practice in Patent Cases. Should a patent be granted on the application you will be designated therein as a joint inventor.

As a named inventor you are entitled to inspect any paper in the file wrapper of the application, order copies of all or any part thereof (at a prepaid cost per 37 CFR 1.19) or make your position of record in the application. Alternatively, you may arrange to do any of the preceding through a registered patent attorney or agent presenting written authorization from you. If you care to join the application, counsel of record (see below) would presumably assist you. Joining in the application would entail the filing of an appropriate oath or declaration by you pursuant to 37 CFR 1.63.

Requests for information regarding your application should be directed to the File Information Unit at (703) 308-2733. Information regarding how to pay for and order a copy of the application, or a specific paper in the application, should be directed to Certification Division at (703) 308-9726 or 1-800-972-6382 (outside the Washington D.C. area).

Christina Tartera Donnell

Christina Tartera Donnell
Senior Petitions Attorney
Office of Petitions

WORKMAN NYDEGGER
(F/K/A WORKMAN NYDEGGER & SEELEY)
60 EAST SOUTH TEMPLE
1000 EAGLE GATE TOWER
SALT LAKE CITY UT 84111

UNITED STATES PATENT AND TRADEMARK OFFICE

Commissioner for Patents
United States Patent and Trademark Office
P.O. Box 1450
Alexandria, VA 22313-1450
www.uspto.gov

STERNE KESSLER GOLDSTEIN & FOX
1100 NEW YORK AVENUE, N.W.
WASHINGTON, DC 20005

COPY MAILED
SEP 14 2005
OFFICE OF PETITIONS

In re Application of	:	
Sam Ziqun Zhao et al	:	
Application No. 11/076,873	:	ON PETITION
Filed: March 11, 2005	:	
Attorney Docket No. 1875.1730002/JSW	:	

This is a decision on the petition filed July 15, 2005, which is being treated under 37 CFR 1.182, to correct the spelling of the named of one of the inventors.

The petition is granted.

The name of one of the named inventors will be changed from "Sam Zinqun Zhao" to Sam Ziqun Zhao.

A corrected filing receipt is enclosed.

Telephone inquiries concerning this decision should be directed to Wan Laymon at (703) 306-5685.

This matter is being referred to Technology Center AU 2891 for examination in due course.

Wan Laymon
Wan Laymon
Petitions Examiner
Office of Petitions
Office of the Deputy Commissioner
for Patent Examination Policy

Enclosure: Corrected Filing Receipt

UNITED STATES PATENT AND TRADEMARK OFFICE

UNITED STATES DEPARTMENT OF COMMERCE
United States Patent and Trademark Office
Address: COMMISSIONER FOR PATENTS
P.O. Box 1450
Alexandria, Virginia 22313-1450
www.uspto.gov

PEPPER HAMILTON LLP
ONE MELLON CENTER, 50TH FLOOR
500 GRANT STREET
PITTSBURGH, PA 15219

Mail Date: 05/04/2010

Applicant	: Timothy L. Robinson	: DECISION ON REQUEST FOR
Patent Number	: 7624073	: RECALCULATION of PATENT
Issue Date	: 11/24/2009	: TERM ADJUSTMENT IN VIEW
Application No	: 11/076,891	: OF WYETH AND NOTICE OF INTENT TO
Filed	: 03/11/2005	: ISSUE CERTIFICATE OF CORRECTION
		:

The Request for Recalculation is **GRANTED** to the extent indicated.

The patent term adjustment has been determined to be **0** days. The USPTO will *sua sponte* issue a certificate of correction reflecting the amount of PTA days determined by the recalculation.

Prior to the issuance of the certificate of correction, the USPTO will afford patentee an opportunity to be heard and request reconsideration. Accordingly, patentee has **one month or thirty (30) days**, whichever is longer, to file a request for reconsideration of this patent term adjustment calculation. See 35 U.S.C. 154(b)(3)(B)(ii) and 37 CFR 1.322(a)(4). No extensions of time will be granted under 37 CFR 1.136.

Patentee should use document code PET.OP if electronically filing a request for reconsideration of this patent term adjustment calculation. The patentee must also include the information required by 37 CFR 1.705(b)(2) and the fee required by 37 CFR 1.18(e). If patentee does not file a timely request for reconsideration of this patent term adjustment calculation including the information required by 37 CFR 1.705(b)(2) and the fee required by 37 CFR 1.18(e), the USPTO will issue a certificate of correction reflecting the PTA determination noted above.

Patentee should be aware that in order to preserve the right to review in the United States District Court for the District of Columbia of the USPTO patent term adjustment determination, patentee must ensure that he or she also take the steps required under 35 U.S.C. 154(b)(4)(A) in a timely manner. Nothing in the request for recalculation should be construed as providing an alternative time frame for commencing a civil action under 35 U.S.C. 154(b)(4)(A).

Any questions concerning this decision should be directed to the Office of Patent Legal Administration at 571-272-7702.

UNITED STATES PATENT AND TRADEMARK OFFICE

Commissioner for Patents
United States Patent and Trademark Office
P.O. Box 1450
Alexandria, VA 22313-1450
www.uspto.gov

MAIL

FEB 2 8 2007

DIRECTOR OFFICE
TECHNOLOGY CENTER 2600

DUANE MORRIS LLP
1667 K Street, N.W.
Washington DC 20006

In re application of :
KENNEDY, JOSEPH P. JR., et al. :
Application Serial No. 11/076,903 :
Filed: March 11, 2005 :
For: **METHOD AND SYSTEM FOR APPLYING WIRELESS GEOLOCATION TECHNOLOGY** :

DECISION
ON PETITION

This is a response to the petition under 37 CFR 1.59(b), filed November 29, 2006, to expunge information from the above identified application.

The decision on the petition will be held in abeyance until prosecution on the merits is closed, at which time the petition will be decided.

Petitioner requests that the information submitted in an exhibit attached to a declaration under 37 CFR § 1.131, filed November 29, 2006, be expunged from the record. Petitioner states that either (A) that the information contains trade secret material, proprietary material and/or material that is subject to a protective order which has not been made public, and the information has not otherwise been made public. The petition fee set forth in 37 CFR 1.17(h) has been paid.

The decision on the petition is held in abeyance because prosecution on the merits is not closed. Accordingly, it is not appropriate to make a final determination of whether or not the material requested to be expunged is "material", with "materiality" being defined as any information which the examiner considers as being important to a determination of patentability of the claims. Thus, the decision on the petition to expunge must be held in abeyance at this time.

During prosecution on the merits, the examiner will determine whether or not the identified document is considered to be "material". If the information is not considered by the examiner to be material, the information will be returned to applicant.

The document in question will not be available to the public during prosecution

Kenneth A. Wieder
Quality Assurance Specialist
Technology Center 2600
Communications

UNITED STATES PATENT AND TRADEMARK OFFICE

Commissioner for Patents
United States Patent and Trademark Office
P.O. Box 1450
Alexandria, VA 22313-1450
www.uspto.gov

JUN - 3 2005

Greenblum & Bernstein, P.L.C.
1950 Roland Clarke Place
Reston, VA 20191

In re application of
Walter P. Kistler, et al
Application No. 11/076,926
Filed: March 11, 2005
For: PLATFORM AND SYSTEM FOR PROPELLANT TANK STORAGE AND TRANSFER IN SPACE

DECISION ON PETITION TO MAKE SPECIAL (APPLICANT'S AGE)

This is a decision on the petition submitted on March 11, 2005 under 37 CFR 1.102 (c) to make the above-identified application special under the accelerated examination procedure set forth in MPEP 708.02, Section IV: Applicant's Age.

The petition is **GRANTED**.

An application may be accorded special status upon the filing of a petition providing evidence showing that the applicant is at least 65 years old. Such a showing may be provided by evidence such as a birth certificate or a statement from the applicant.

The evidence submitted with the petition is a notarized statement by Walter P. Kistler and Robert A. Citron indicating that both are at least 65 years of age.

The examiner is directed (1) to make an interference search for possible interfering applications, (2) to promptly examine this application out of turn, and (3) if any interfering application is discovered, to examine such application simultaneously and state in the first official letter of such application that it is being taken out of turn because of a possible interference.

Petitioner is advised that this application will continue to be special, throughout its entire prosecution and pendency, including interference or appeal, if any, only if petitioner makes a prompt ***bona fide*** effort, in response to each Office action, to place the application in condition for allowance, even if it is necessary to conduct an interview with the examiner to accomplish this purpose.

SUMMARY: Petition to Make Special **GRANTED**.

Kenneth J. Domer
Special Programs Examiner
Technology Center 3600
571-272-6587

KJD/dcg: 1/14/05

UNITED STATES PATENT AND TRADEMARK OFFICE

Commissioner for Patents
United States Patent and Trademark Office
P.O. Box 1450
Alexandria, VA 22313-1450
www.uspto.gov

SEP 18 2005

GREENBLUM & BERNSTEIN, P.L.C.
1950 ROLAND CLARKE PLACE
RESTON, VA 20191

In re application of Walter P. Kistler, et al. Application No. 11/076,950 Filed: March 11, 2005 For: PLATFORM AND SYSTEM FOR MASS STORAGE AND TRANSFER IN SPACE	: : : :	**DECISION ON PETITION TO MAKE SPECIAL (APPLICANT'S AGE)**

This is a decision on the petition submitted on March 11, 2005 under 37 CFR 1.102 (c) to make the above-identified application special under the accelerated examination procedure set forth in MPEP 708.02, Section IV: Applicant's Age.

The petition is **GRANTED**.

An application may be accorded special status upon the filing of a petition providing evidence showing that the applicant is at least 65 years old. Such a showing may be provided by evidence such as a birth certificate or a statement from the applicant.

The evidence submitted with the petition is a notarized statement from Walter P. Kistler and Robert A. Citron indicating that they are at least 65 years of age.

The examiner is directed (1) to make an interference search for possible interfering applications, (2) to promptly examine this application out of turn, and (3) if any interfering application is discovered, to examine such application simultaneously and state in the first official letter of such application that it is being taken out of turn because of a possible interference.

Petitioner is advised that this application will continue to be special, throughout its entire prosecution and pendency, including interference or appeal, if any, only if petitioner makes a prompt ***bona fide*** effort, in response to each Office action, to place the application in condition for allowance, even if it is necessary to conduct an interview with the examiner to accomplish this purpose.

SUMMARY: Petition to Make Special **GRANTED**.

Randolph A. Reese
Special Programs Examiner
Technology Center 3600
(571) 272-6619

RAR/dcg: 10/14/05