UNITED STATES PATENT AND TRADEMARK OFFICE

COMMISSIONER FOR PATENTS
UNITED STATES PATENT AND TRADEMARK OFFICE
WASHINGTON, D.C. 20231
www.uspto.gov

10-5-07

caf

In re Application of: Shuichi Yokozawa et al. :
Application No. 11/141,059 : DECISION ON
Filed: June 1, 2005 : PETITION
For: POLYIMIDE/METAL LAMINATE AND ITS PRODUCTION :
METHOD :

This is a decision on the PETITION UNDER 37 C.F.R. 1.181(a) REQUESTING RE-MAILING OF NON-FINAL OFFICE ACTION filed on August 23, 2007.

On February 28, 2007, a non-final office action was mailed to Applicant. A review of the file shows that the office action was returned to the USPTO on February 28, 2007 as undelivered. On August 23, 2007, the instant petition was filed to formally request that the August 23, 2007 office action be re-mailed.

DECISION

Since the file indicates the action was returned as undelivered, no further evidence is necessary to establish that the office action was not received. Accordingly, the petition for re-mailing the non-final office action is **GRANTED.**

The office action will be mailed under separate cover shortly.

Jacqueline M. Stone

Jacqueline M. Stone, Director
Technology Center 1700
Chemical and Materials Engineering

BUCHANAN, INGERSOLL & ROONEY PC
POST OFFICE BOX 1404
ALEXANDRIA VA 22313-1404

UNITED STATES PATENT AND TRADEMARK OFFICE

Commissioner for Patents
United States Patent and Trademark Office
P.O. Box 1450
Alexandria, VA 22313-1450
www.uspto.gov

Paper No.

MCDONNELL BOEHNEN HULBERT & BERGHOFF LLP
300 S. WACKER DRIVE
32ND FLOOR
CHICAGO IL 60606

MAILED

SEP 28 2009

OFFICE OF PETITIONS

In re Application of	:	
Sharma et al.	:	DECISION ON APPLICATION
Application No. 11/141,072	:	FOR
Filed: May 31, 2005	:	PATENT TERM ADJUSTMENT
Attorney Docket No. 02-013-A	:	

This is in response to the "APPLICATION FOR PATENT TERM ADJUSTMENT UNDER 37 CFR § 1.705(b)" filed January 22, 2009. Applicants request that the initial Determination of Patent Term Adjustment under 35 U.S.C. 154(b) be corrected from zero (0) days to three (3) days.

The application for patent term adjustment is **DISMISSED**.

On November 6, 2008, the Office mailed a Determination of Patent Term Adjustment under 35 U.S.C. 154(b) in the above-identified application. Applicants were advised that the patent term adjustment to date is 0 days. On January 22, 2009, Applicants timely[1] filed the instant application for patent term adjustment. Applicants dispute the failure to accord 69 days of examination delay, pursuant to 37 CFR 1.703(a)(2), for failure to mail an action under 35 U.S.C. 132 within four months of the filing of a response to a non-final Office action on March 20, 2006. The Office responded to the March 20, 2006 submission via the mailing of a non-final Office action on September 27, 2006, which is four months and 69 days after the filing of the response on March 20, 2006. Consequently, Applicants maintain that 69 days of examination delay should have been accorded.

[1] Office records show that the Issue Fee payment was received on January 22, 2009.

Applicants state that any patent issuing from the application is not subject to a terminal disclaimer.

Applicants' argument has been considered, but not found persuasive. The examiner responded to the March 20, 2006 response within four months with the mailing of an Office action on June 13, 2006. As such, there was no Office delay within the meaning of 37 CFR 1.702(a)(2) for failure to take action within four months.

Furthermore, in response thereto, applicant filed an amendment. It is noted that the non-final Office action mailed September 27, 2006 then responded to the July 14, 2006 amendment (and thus, further responded to the March 20, 2006 as amended on July 14, 2006).

In view thereof, the patent term adjustment at the time of the mailing of the notice of allowance remains (0) days.

Submission of the $200.00 fee set forth in 37 CFR 1.18(e) is acknowledged. No additional fee is required.

The Office of Data Management has been advised of this decision. The application is, thereby, being forwarded to the Office of Data Management for issuance of the patent.

Telephone inquiries regarding this matter should be directed to Senior Attorney Paul Shanoski at (571) 272-3225.

Nancy Johnson
Senior Petitions Attorney
Office of Petitions

UNITED STATES PATENT AND TRADEMARK OFFICE

UNITED STATES DEPARTMENT OF COMMERCE
United States Patent and Trademark Office
Address: COMMISSIONER FOR PATENTS
P.O. Box 1450
Alexandria, Virginia 22313-1450
www.uspto.gov

MCDONNELL BOEHNEN HULBERT & BERGHOFF LLP
300 S. WACKER DRIVE
32ND FLOOR
CHICAGO, IL 60606

Mail Date: 04/21/2010

Applicant	: Arun Sharma	: DECISION ON REQUEST FOR
Patent Number	: 7612167	: RECALCULATION of PATENT
Issue Date	: 11/03/2009	: TERM ADJUSTMENT IN VIEW
Appliction No	: 11/141,072	: OF WYETH AND NOTICE OF INTENT TO
Filed	: 05/31/2005	: ISSUE CERTIFICATE OF CORRECTION
		:

The Request for Recalculation is **GRANTED** to the extent indicated.

The patent term adjustment has been determined to be **99** days. The USPTO will *sua sponte* issue a certificate of correction reflecting the amount of PTA days determined by the recalculation.

Prior to the issuance of the certificate of correction, the USPTO will afford patentee an opportunity to be heard and request reconsideration. Accordingly, patentee has **one month or thirty (30) days**, whichever is longer, to file a request for reconsideration of this patent term adjustment calculation. See 35 U.S.C. 154(b)(3)(B)(ii) and 37 CFR 1.322(a)(4). No extensions of time will be granted under 37 CFR 1.136.

Patentee should use document code PET.OP if electronically filing a request for reconsideration of this patent term adjustment calculation. The patentee must also include the information required by 37 CFR 1.705(b)(2) and the fee required by 37 CFR 1.18(e). If patentee does not file a timely request for reconsideration of this patent term adjustment calculation including the information required by 37 CFR 1.705(b)(2) and the fee required by 37 CFR 1.18(e), the USPTO will issue a certificate of correction reflecting the PTA determination noted above.

Patentee should be aware that in order to preserve the right to review in the United States District Court for the District of Columbia of the USPTO patent term adjustment determination, patentee must ensure that he or she also take the steps required under 35 U.S.C. 154(b)(4)(A) in a timely manner. Nothing in the request for recalculation should be construed as providing an alternative time frame for commencing a civil action under 35 U.S.C. 154(b)(4)(A).

Any questions concerning this decision should be directed to the Office of Patent Legal Administration at 571-272-7702.

UNITED STATES PATENT AND TRADEMARK OFFICE

UNITED STATES DEPARTMENT OF COMMERCE
United States Patent and Trademark Office
Address: COMMISSIONER FOR PATENTS
P.O. Box 1450
Alexandria, Virginia 22313-1450
www.uspto.gov

FAY SHARPE/LUCENT
1228 Euclid Avenue, 5th Floor
The Halle Building
Cleveland, OH 44115-1843

Mail Date: 05/21/2010

Applicant	: David S. Benco	: DECISION ON REQUEST FOR
Patent Number	: 7623634	: RECALCULATION of PATENT
Issue Date	: 11/24/2009	: TERM ADJUSTMENT IN VIEW
Application No	: 11/141,101	: OF WYETH AND NOTICE OF INTENT TO
Filed	: 05/31/2005	: ISSUE CERTIFICATE OF CORRECTION
		:

The Request for Recalculation is **GRANTED** to the extent indicated.

The patent term adjustment has been determined to be **1212** days. The USPTO will *sua sponte* issue a certificate of correction reflecting the amount of PTA days determined by the recalculation.

Prior to the issuance of the certificate of correction, the USPTO will afford patentee an opportunity to be heard and request reconsideration. Accordingly, patentee has **one month or thirty (30) days**, whichever is longer, to file a request for reconsideration of this patent term adjustment calculation. See 35 U.S.C. 154(b)(3)(B)(ii) and 37 CFR 1.322(a)(4). No extensions of time will be granted under 37 CFR 1.136.

Patentee should use document code PET.OP if electronically filing a request for reconsideration of this patent term adjustment calculation. The patentee must also include the information required by 37 CFR 1.705(b)(2) and the fee required by 37 CFR 1.18(e). If patentee does not file a timely request for reconsideration of this patent term adjustment calculation including the information required by 37 CFR 1.705(b)(2) and the fee required by 37 CFR 1.18(e), the USPTO will issue a certificate of correction reflecting the PTA determination noted above.

Patentee should be aware that in order to preserve the right to review in the United States District Court for the District of Columbia of the USPTO patent term adjustment determination, patentee must ensure that he or she also take the steps required under 35 U.S.C. 154(b)(4)(A) in a timely manner. Nothing in the request for recalculation should be construed as providing an alternative time frame for commencing a civil action under 35 U.S.C. 154(b)(4)(A).

Any questions concerning this decision should be directed to the Office of Patent Legal Administration at 571-272-7702.

UNITED STATES PATENT AND TRADEMARK OFFICE

UNITED STATES DEPARTMENT OF COMMERCE
United States Patent and Trademark Office
Address: COMMISSIONER FOR PATENTS
P.O. Box 1450
Alexandria, Virginia 22313-1450
www.uspto.gov

Johnson & Johnson
One Johnson & Johnson Plaza
New Brunswick, NJ 08933-7003

Mail Date: 06/01/2010

Applicant	: Timothy G. Dietz	: DECISION ON REQUEST FOR
Patent Number	: 7621866	: RECALCULATION of PATENT
Issue Date	: 11/24/2009	: TERM ADJUSTMENT IN VIEW
Application No	: 11/141,116	: OF WYETH AND NOTICE OF INTENT TO
Filed	: 05/31/2005	: ISSUE CERTIFICATE OF CORRECTION
		:

The Request for Recalculation is **GRANTED** to the extent indicated.

The patent term adjustment has been determined to be **1089** days. The USPTO will *sua sponte* issue a certificate of correction reflecting the amount of PTA days determined by the recalculation.

Prior to the issuance of the certificate of correction, the USPTO will afford patentee an opportunity to be heard and request reconsideration. Accordingly, patentee has **one month or thirty (30) days**, whichever is longer, to file a request for reconsideration of this patent term adjustment calculation. See 35 U.S.C. 154(b)(3)(B)(ii) and 37 CFR 1.322(a)(4). No extensions of time will be granted under 37 CFR 1.136.

Patentee should use document code PET.OP if electronically filing a request for reconsideration of this patent term adjustment calculation. The patentee must also include the information required by 37 CFR 1.705(b)(2) and the fee required by 37 CFR 1.18(e). If patentee does not file a timely request for reconsideration of this patent term adjustment calculation including the information required by 37 CFR 1.705(b)(2) and the fee required by 37 CFR 1.18(e), the USPTO will issue a certificate of correction reflecting the PTA determination noted above.

Patentee should be aware that in order to preserve the right to review in the United States District Court for the District of Columbia of the USPTO patent term adjustment determination, patentee must ensure that he or she also take the steps required under 35 U.S.C. 154(b)(4)(A) in a timely manner. Nothing in the request for recalculation should be construed as providing an alternative time frame for commencing a civil action under 35 U.S.C. 154(b)(4)(A).

Any questions concerning this decision should be directed to the Office of Patent Legal Administration at 571-272-7702.

UNITED STATES PATENT AND TRADEMARK OFFICE

UNITED STATES DEPARTMENT OF COMMERCE
United States Patent and Trademark Office
Address: COMMISSIONER FOR PATENTS
P.O. Box 1450
Alexandria, Virginia 22313-1450
www.uspto.gov

ORRICK, HERRINGTON & SUTCLIFFE, LLP
IP PROSECUTION DEPARTMENT
4 PARK PLAZA
SUITE 1600
IRVINE, CA 92614-2558

Mail Date: 04/21/2010

Applicant	: Mitchell G. Poplack	: DECISION ON REQUEST FOR
Patent Number	: 7606697	: RECALCULATION of PATENT
Issue Date	: 10/20/2009	: TERM ADJUSTMENT IN VIEW
Appliction No	: 11/141,141	: OF WYETH AND NOTICE OF INTENT TO
Filed	: 05/31/2005	: ISSUE CERTIFICATE OF CORRECTION
		:

The Request for Recalculation is **GRANTED** to the extent indicated.

The patent term adjustment has been determined to be **525** days. The USPTO will *sua sponte* issue a certificate of correction reflecting the amount of PTA days determined by the recalculation.

Prior to the issuance of the certificate of correction, the USPTO will afford patentee an opportunity to be heard and request reconsideration. Accordingly, patentee has **one month or thirty (30) days**, whichever is longer, to file a request for reconsideration of this patent term adjustment calculation. See 35 U.S.C. 154(b)(3)(B)(ii) and 37 CFR 1.322(a)(4). No extensions of time will be granted under 37 CFR 1.136.

Patentee should use document code PET.OP if electronically filing a request for reconsideration of this patent term adjustment calculation. The patentee must also include the information required by 37 CFR 1.705(b)(2) and the fee required by 37 CFR 1.18(e). If patentee does not file a timely request for reconsideration of this patent term adjustment calculation including the information required by 37 CFR 1.705(b)(2) and the fee required by 37 CFR 1.18(e), the USPTO will issue a certificate of correction reflecting the PTA determination noted above.

Patentee should be aware that in order to preserve the right to review in the United States District Court for the District of Columbia of the USPTO patent term adjustment determination, patentee must ensure that he or she also take the steps required under 35 U.S.C. 154(b)(4)(A) in a timely manner. Nothing in the request for recalculation should be construed as providing an alternative time frame for commencing a civil action under 35 U.S.C. 154(b)(4)(A).

Any questions concerning this decision should be directed to the Office of Patent Legal Administration at 571-272-7702.

UNITED STATES PATENT AND TRADEMARK OFFICE

UNITED STATES DEPARTMENT OF COMMERCE
United States Patent and Trademark Office
Address: COMMISSIONER FOR PATENTS
P.O. Box 1450
Alexandria, Virginia 22313-1450
www.uspto.gov

THE FARRELL LAW FIRM, LLP
290 Broadhollow Road
Suite 210E
Melville, NY 11747

Mail Date: 04/21/2010

Applicant	: Myung-Kwang Byun	: DECISION ON REQUEST FOR
Patent Number	: 7586834	: RECALCULATION of PATENT
Issue Date	: 09/08/2009	: TERM ADJUSTMENT IN VIEW
Appliction No	: 11/141,155	: OF WYETH AND NOTICE OF INTENT TO
Filed	: 05/31/2005	: ISSUE CERTIFICATE OF CORRECTION
		:

The Request for Recalculation is **GRANTED** to the extent indicated.

The patent term adjustment has been determined to be **1056** days. The USPTO will *sua sponte* issue a certificate of correction reflecting the amount of PTA days determined by the recalculation.

Prior to the issuance of the certificate of correction, the USPTO will afford patentee an opportunity to be heard and request reconsideration. Accordingly, patentee has **one month or thirty (30) days**, whichever is longer, to file a request for reconsideration of this patent term adjustment calculation. See 35 U.S.C. 154(b)(3)(B)(ii) and 37 CFR 1.322(a)(4). No extensions of time will be granted under 37 CFR 1.136.

Patentee should use document code PET.OP if electronically filing a request for reconsideration of this patent term adjustment calculation. The patentee must also include the information required by 37 CFR 1.705(b)(2) and the fee required by 37 CFR 1.18(e). If patentee does not file a timely request for reconsideration of this patent term adjustment calculation including the information required by 37 CFR 1.705(b)(2) and the fee required by 37 CFR 1.18(e), the USPTO will issue a certificate of correction reflecting the PTA determination noted above.

Patentee should be aware that in order to preserve the right to review in the United States District Court for the District of Columbia of the USPTO patent term adjustment determination, patentee must ensure that he or she also take the steps required under 35 U.S.C. 154(b)(4)(A) in a timely manner. Nothing in the request for recalculation should be construed as providing an alternative time frame for commencing a civil action under 35 U.S.C. 154(b)(4)(A).

Any questions concerning this decision should be directed to the Office of Patent Legal Administration at 571-272-7702.

UNITED STATES PATENT AND TRADEMARK OFFICE

UNITED STATES DEPARTMENT OF COMMERCE
United States Patent and Trademark Office
Address: COMMISSIONER FOR PATENTS
P.O. Box 1450
Alexandria, Virginia 22313-1450
www.uspto.gov

THE FARRELL LAW FIRM, LLP
290 Broadhollow Road
Suite 210E
Melville, NY 11747

Mail Date: 05/18/2010

Applicant : Myung-Kwang Byun
Patent Number : 7586834
Issue Date : 09/08/2009
Application No : 11/141,155
Filed : 05/31/2005

: NOTICE CONCERNING IMPROPER
: CALCULATION OF PATENT TERM
: ADJUSTMENT BASED UPON USPTO
: IMPROPERLY MEASURING REDUCTION
: PERIOD UNDER 37 CFR 1.704(c)(10).

The United States Patent and Trademark Office (USPTO) discovered that in processing the recent recalculation decisions mailed in response to patentee's filed Request for Recalculation of Patent Term Adjustment in view of Wyeth, the USPTO improperly measured the reduction period for reductions under 37 CFR 1.704(c)(10). Pursuant to 37 CFR 1.704(c)(10), patentee's reduction begins on the date of filing the amendment under 37 CFR 1.312 ("1.312 amendment") or other related paper and ends on the date that the Office mails a response to the filing of the 1.312 amendment or other paper. It has been discovered that during the recalculation, the calculation failed to the limit the reduction to the mail date of the response to the 1.312 amendment or other paper. Accordingly, patentee's reductions were greater than warranted.

This notice **VACATES** the previous GRANTED request for recalculation and provides patentee with a revised GRANTED recalculation.

The patent term adjustment has been determined to be **1092** days. The USPTO will *sua sponte* issue a certificate of correction reflecting the amount of patent term adjustment (PTA) days determined by the recalculation.

Prior to the issuance of the certificate of correction, the USPTO will afford patentee an opportunity to be heard and request reconsideration. Accordingly, patentee has **one month or thirty (30) days** from the mail date of this notice, whichever is longer, to file a request for reconsideration of this PTA calculation. See 35 U.S.C. § 154(b)(3)(B)(ii) and 37 CFR 1.322(a)(4).

Patentee should use document code PET.OP if electronically filing a request for reconsideration of this PTA calculation. The patentee must also include the information required by 37 CFR 1.705(b)(2), and the fee required by 37 CFR 1.18(e). If patentee does not file a timely request for reconsideration of this PTA calculation, including the information required by 37 CFR 1.705(b)(2) and the fee required by 37 CFR 1.18(e), the USPTO will issue a certificate of correction reflecting the PTA determination noted above.

Patentee should be aware that in order to preserve the right of review of the USPTO's PTA determination in the United States District Court for the District of Columbia, patentee must ensure that the steps required under 35 U.S.C. § 154 (b)(4) are taken in a timely manner. Nothing in the request for recalculation should be construed as providing an alternative time frame for commencing a civil action under 35 U.S.C. § 154(b)(4).

UNITED STATES PATENT AND TRADEMARK OFFICE

Commissioner for Patents
United States Patent and Trademark Office
P.O. Box 1450
Alexandria, VA 22313-1450
www.uspto.gov

DAVIDSON, DAVIDSON & KAPPEL, LLC
485 7TH AVENUE
14TH FLOOR
NEW YORK NY 10018

MAILED

MAR 24 2010

OFFICE OF PETITIONS

In re Application of	:	
Hoeschele et al.	:	
Application No. 11/141,157	:	DECISION ON PETITION
Filed: May 31, 2005	:	
Attorney Docket No. 510.1141	:	

This is a decision on the petition under the unintentional provisions of 37 CFR 1.137(b), filed January 20, 2010, to revive the above-identified application.

The petition is **GRANTED**.

The application became abandoned for failure to reply in a timely manner within the meaning of 37 CFR 1.113 to the final Office action mailed May 1, 2009, which set a shortened statutory period for reply of three (3) months. No extensions of time under the provisions of 37 CFR 1.136(a) were obtained. Accordingly, the application became abandoned on August 2, 2009. A Notice of Abandonment was mailed November 13, 2009.

The petition satisfies the requirements of 37 CFR 1.137(b) in that petitioner has supplied (1) the reply in the form of a Notice of Appeal and fee of $540.00; (2) the petition fee of $1,620.00; and (3) a proper statement of unintentional delay.

The two-month period for filing an appeal brief under 37 CFR 41.37 (accompanied by the fee required by 37 CFR 41.20(b)(2)), runs from the date of this decision.

Telephone inquiries concerning this decision should be directed to the undersigned at (571) 272-7751.

This application is being referred to Technology Center AU 1792 to await the filing of an appeal brief or for such other appropriate reply as may be submitted to continue prosecution of the application.

Joan Olszewski

Joan Olszewski
Petitions Examiner
Office of Petitions

UNITED STATES PATENT AND TRADEMARK OFFICE

Commissioner for Patents
United States Patent and Trademark Office
P.O. Box 1450
Alexandria, VA 22313-1450
www.uspto.gov

CHOATE, HALL & STEWART/HARVARD UNIVERSITY
Two International Place
Boston, MA 022110

MAILED

JUL 08 2009

OFFICE OF PETITIONS

In re Application of	:	
David R. Liu, et al.	:	
Application No. 11/141,164	:	DECISION ON PETITION
Filed: May 31, 2005	:	TO WITHDRAW
Attorney Docket No. LS1-002C5	:	FROM RECORD
	:	

This is a decision on the Request to Withdraw as attorney or agent under 37 C.F.R. § 1.36(b) or 37 C.F.R. § 10.40 filed June 9, 2009.

The request is **NOT APPROVED**.

A review of the file record indicates that Choate, Hall & Stewart/Harvard University does not have power of attorney in this patent application nor is there any statement or evidence of record of employment in or otherwise being engaged in the proceedings in this patent application. Accordingly, the request to withdraw under 37 C.F.R. § 1.36(b) is not applicable.

All future communications from the Office will continue to be directed to the below-listed address until otherwise properly notified by the applicant.

Telephone inquires concerning this decision should be directed to Terri Williams at 571-272-2991.

TWilliams

Terri Williams
Petitions Examiner
Office of Petitions

cc: **GOODWIN PROCTER LLP**
Patent Administrator
53 State Street
Exchange Place
Boston, MA 02109-2881

UNITED STATES PATENT AND TRADEMARK OFFICE

UNITED STATES DEPARTMENT OF COMMERCE
United States Patent and Trademark Office
Address: COMMISSIONER FOR PATENTS
P.O. Box 1450
Alexandria, Virginia 22313-1450
www.uspto.gov

CESARI AND MCKENNA, LLP
88 BLACK FALCON AVENUE
BOSTON, MA 02210

Mail Date: 06/08/2010

Applicant	: Syed Khalid Raza	: DECISION ON REQUEST FOR
Patent Number	: 7630392	: RECALCULATION of PATENT
Issue Date	: 12/08/2009	: TERM ADJUSTMENT IN VIEW
Application No	: 11/141,183	: OF WYETH AND NOTICE OF INTENT TO
Filed	: 05/31/2005	: ISSUE CERTIFICATE OF CORRECTION
		:

The Request for Recalculation is **GRANTED** to the extent indicated.

The patent term adjustment has been determined to be **1226** days. The USPTO will *sua sponte* issue a certificate of correction reflecting the amount of PTA days determined by the recalculation.

Prior to the issuance of the certificate of correction, the USPTO will afford patentee an opportunity to be heard and request reconsideration. Accordingly, patentee has **one month or thirty (30) days**, whichever is longer, to file a request for reconsideration of this patent term adjustment calculation. See 35 U.S.C. 154(b)(3)(B)(ii) and 37 CFR 1.322(a)(4). No extensions of time will be granted under 37 CFR 1.136.

Patentee should use document code PET.OP if electronically filing a request for reconsideration of this patent term adjustment calculation. The patentee must also include the information required by 37 CFR 1.705(b)(2) and the fee required by 37 CFR 1.18(e). If patentee does not file a timely request for reconsideration of this patent term adjustment calculation including the information required by 37 CFR 1.705(b)(2) and the fee required by 37 CFR 1.18(e), the USPTO will issue a certificate of correction reflecting the PTA determination noted above.

Patentee should be aware that in order to preserve the right to review in the United States District Court for the District of Columbia of the USPTO patent term adjustment determination, patentee must ensure that he or she also take the steps required under 35 U.S.C. 154(b)(4)(A) in a timely manner. Nothing in the request for recalculation should be construed as providing an alternative time frame for commencing a civil action under 35 U.S.C. 154(b)(4)(A).

Any questions concerning this decision should be directed to the Office of Patent Legal Administration at 571-272-7702.

UNITED STATES PATENT AND TRADEMARK OFFICE

Commissioner for Patents
United States Patent and Trademark Office
P.O. Box 1450
Alexandria, VA 22313-1450
www.uspto.gov

Harness, Dickey & Pierce, P.L.C.
P.O. Box 8910
Reston, VA 20195

COPY MAILED
SEP 23 2008

In re Application of	:	
Hakan Thysell	:	
Application No. 11/141,195	:	DECISION ON PETITION
Filed: June 1, 2005	:	TO WITHDRAW
Attorney Docket No. 328216US8	:	FROM RECORD
	:	

This is a decision on the Request to Withdraw as attorney or agent of record under 37 C.F.R. § 1.36(b), filed June 12, 2008.

The request is **NOT APPROVED** because it is moot.

A review of the file record indicates that the power of attorney to Harness, Dickey & Pierce, P.L.C. has been revoked by the assignee of the patent application on July 3, 2008. Accordingly, the request to withdraw under 37 C.F.R. § 1.36(b) is moot.

All future communications from the Office will continue to be directed to the below-listed address until otherwise notified by applicant.

Telephone inquires concerning this decision should be directed to Terri Williams at 571-272-2991.

Terri Williams
Petitions Examiner
Office of Petitions

cc: **Oblon, Spivak, McClelland Maier & Neustadt, P.C.**
1940 Duke Street
Alexandria, VA 22314

UNITED STATES PATENT AND TRADEMARK OFFICE

Commissioner for Patents
United States Patent and Trademark Office
P.O. Box 1450
Alexandria, VA 22313-1450
www.uspto.gov

MAIL

JAN 2 6 2009

DIRECTOR'S OFFICE
TECHNOLOGY CENTER 2600

ROBERT E. BUSHNELL
SUITE 300
1522 K STREET, N.W.
WASHINGTON, D.C. 20005

In re Application of: Woong-Sik Choi Application No. 11/141,198 Filed: June 1, 2005 For: LIGHT EMITTING DISPLAY AND FABRICATION METHOD THEREOF	)))))	**DECISION ON PETITION TO WITHDRAW RESTRICTION REQUIREMENT UNDER 37 CFR §1.144**

This is a decision on the petition filed November 13, 2008 and again November 14, 2008 under 37 C.F.R. §1.144 to withdraw an outstanding restriction requirement.

The petition is **DENIED**.

On March 28, 2008, the examiner required restriction between Invention I, claims 1-8, drawn to a light emitting display product, classified in class 315, subclass 169.3 and Invention II, claims 9-20, drawn to a light emitting display fabrication process, classified in class 445, subclass 25.

The rationale used by the examiner in support of the restriction requirement included explanation that the 2 groups of claims are related as process of making and product made which are distinct from each other if either or both of the following can be shown: (1) that the process as claimed can be used to make another materially different product or (2) that the product as claimed can be made by another and materially different process. The examiner stated that the first group of claims can be made by another materially different process that the light emitting display fabrication process as described in the second group of claims since the first group of claims does not require crystallizing the semiconductor layers, forming a first insulating layer so as to cover the semiconductor layers and forming gate electrodes of the driving transistors on the first insulating layer as described in the second group of claims.

On April 28, 2008, applicant elected the claims of Invention I, while traversing the requirement and amending claims 9 and 15. Applicant argued three points: (1) the examiner has failed to show any type of burden, much less a serious burden, in the

absence of a restriction requirement; (2) the subject matter of the two groups are overlap and the fields of search are coextensive; and (3) the claims define the same essential characteristics of a single disclosed embodiment of an invention, restriction therebetween should never be required.

On October 16, 2008, the examiner maintained the restriction requirement making it Final while rejecting elected claims 1-8 in a non-final Office action.

On November 13, 2008 and again November 14, 2008, petitioner filed the instant petition.

REGULATIONS AND PRACTICE

37 C.F.R. § 1.144 states:

> After a final requirement for restriction, the applicant, in addition to making any reply due on the remainder of the action, may petition the Director to review the requirement ... A petition will not be considered if reconsideration of the requirement was not requested (see § 1.181).

37 C.F.R. § 1.181 states:

> (a) Petition may be taken to the Director:
> (1) From any action or requirement of any examiner in the ex parte prosecution of an application, or in ex parte or inter partes prosecution of a reexamination proceeding which is not subject to appeal to the Board of Patent Appeals and Interferences or to the court;
> (2) In cases in which a statute or the rules specify that the matter is to be determined directly by or reviewed by the Director; and
> (3) To invoke the supervisory authority of the Director in appropriate circumstances. For petitions involving action of the Board of Patent Appeals and Interferences, see § 41.3 of this title.
> (b) Any such petition must contain a statement of the facts involved and the point or points to be reviewed and the action requested. Briefs or memoranda, if any, in support thereof should accompany or be embodied in the petition; and where facts are to be proven, the proof in the form of affidavits or declarations (and exhibits, if any) must accompany the petition.
> (c) When a petition is taken from an action or requirement of an examiner in the ex parte prosecution of an application, or in the ex parte or inter partes prosecution of a reexamination proceeding, it may be required that there have been a proper request for reconsideration (§ 1.111) and a repeated action by the examiner. The examiner may be directed by the Director to furnish a written statement, within a specified time, setting forth the reasons for his or her decision upon the

matters averred in the petition, supplying a copy to the petitioner....

(f) The mere filing of a petition will not stay any period for reply that may be running against the application, nor act as a stay of other proceedings. Any petition under this part not filed within two months of the mailing date of the action or notice from which relief is requested may be dismissed as untimely, except as otherwise provided. This two-month period is not extendable....

MPEP § 803 states:

Under the statute, the claims of an application may properly be required to be restricted to one of two or more claimed inventions only if they are able to support separate patents and they are either independent (MPEP § 802.01, § 806.06 and § 808.01) or distinct (MPEP § 806.05 - § 806.05(j)).
If the search and examination of all the claims in an application can be made without serious burden, the examiner must examine them on the merits, even though they includes claims to independent or distinct inventions.

CRITERIA FOR RESTRICTION BETWEEN PATENTABLY DISTINCT INVENTIONS

There are two criteria for a proper requirement for restriction between patentably distinct inventions:
(A) The inventions must be independent (see MPEP § 802.01, § 806.06, § 808.01) or distinct as claimed (see MPEP § 806.05 - § 806.05(j)); and
(B) There would be a serious burden on the examiner if restriction is not required (see MPEP § 803.02, § 808, and § 808.02).... For purposes of the initial requirement, a serious burden on the examiner may be *prima facie* shown by appropriate explanation of separate classification, or separate status in the art, or a different field of search as defined in MPEP § 808.02....

MPEP § 808.02 states:

Where, as disclosed in the application, the several inventions claimed are related, and such related inventions are not patentably distinct as claimed, restriction under 35 U.S.C. 121 is never proper (MPEP § 806.05). If applicant voluntarily files claims to such related inventions in different applications, double patenting may be held.
Where the inventions as claimed are shown to be independent or distinct under the criteria of MPEP § 806.05(c) - § 806.06, the examiner, in order to establish reasons for insisting upon restriction, must explain why there would be a serious burden on the examiner if restriction is not required. Thus the examiner must show by appropriate explanation one of the following:
(A) Separate classification thereof: This shows that each invention has attained recognition in the art as a separate subject for inventive effort, and also a

separate field of search. Patents need not be cited to show separate classification.
(B) A separate status in the art when they are classifiable together : Even though they are classified together, each invention can be shown to have formed a separate subject for inventive effort when the examiner can show a recognition of separate inventive effort by inventors. Separate status in the art may be shown by citing patents which are evidence of such separate status, and also of a separate field of search.
(C) A different field of search : Where it is necessary to search for one of the inventions in a manner that is not likely to result in finding art pertinent to the other invention(s) (e.g., searching different classes /subclasses or electronic resources, or employing different search queries, a different field of search is shown, even though the two are classified together. The indicated different field of search must in fact be pertinent to the type of subject matter covered by the claims. Patents need not be cited to show different fields of search.
Where, however, the classification is the same and the field of search is the same and there is no clear indication of separate future classification and field of search, no reasons exist for dividing among independent or related inventions.

MPEP § 821.01 states:

Where the initial requirement is traversed, it should be reconsidered. If, upon reconsideration, the examiner is still of the opinion that restriction is proper, it should be repeated and made final in the next Office action. (See MPEP § 803.01.) In doing so, the examiner should reply to the reasons or arguments advanced by applicant in the traverse. Form paragraph 8.25 should be used to make a restriction requirement final.

DECISION

Petitioner repeats the arguments as provided in the response to the restriction requirement filed April 28, 2008. The main arguments are that the two groups of inventions overlap and the examiner has failed to show any type of burden, much less serious burden, in the absence of a restriction requirement.

In response, the two inventions are related as process of making and product made in accordance with MPEP §806.05(j). These two inventions are clearly distinct since a completely different process of making could be used to make the emitting display product of Invention I. For example, Invention I does not require "crystallizing the semiconductor layers; forming a first insulating layer to cover the semiconductor layers; and forming gate electrodes of the driving transistors on the first insulating layers" as recited in non-elected Invention II covering claims 9-20. Therefore, the examiner properly found that claims 1-8 and 9-20, respectively are drawn to different inventive concepts (product and process claims) which are patentably distinct for the reason above. In establishing serious burden in accordance with MPEP §808.02, the examiner must show either separate classification thereof, a separate status in the art when they are

classifiable together, or a different field of search. The examiner has shown the two inventions have separate classification; where the Invention I: light emitting display product is classified in class 315/169.3, whereas the Invention II: fabrication process is classified in class 445/25. This clearly shows that each invention has attained recognition in the art as a separate subject for inventive effort, and also a separate field of search. In addition, the prior art applicable to Invention I as applied in the rejection of claims 1-8 in Office Action mailed October 16, 2008 was not applicable to the non-elected Invention II. Therefore, the examiner has properly pointed out that there would be a serious search and examination burden if restriction were not required.

For the above reasons, the petition is **DENIED** and the restriction requirement is deemed to be proper.

Petitioner may submit a request for reconsideration within **TWO MONTHS** of the date of this decision.

Marian C Knode

Marian Knode, Director
Technology Center 2600
Communications

UNITED STATES PATENT AND TRADEMARK OFFICE

Commissioner for Patents
United States Patent and Trademark Office
P.O. Box 1450
Alexandria, VA 22313-1450
www.uspto.gov

ROBERT E. BUSHNELL & LAW FIRM
2029 K STREET NW
SUITE 600
WASHINGTON DC 20006-1004

COPY MAILED

MAR 09 2009

OFFICE OF PETITIONS

In re Application of
Woong-Sik Choi
Application No. 11/141,198
Filed: June 1, 2005
Attorney Docket No. P57498

RESPONSE TO PETITION

This is a decision on the petition filed November 13, 2008 requesting that the Commissioner "strike out" pages 2 and 3 of the Office communication mailed October 16, 2008, which is being treated as a petition under 37 CFR 1.59 requesting that pages 2 and 3 of the Office communication mailed October 16, 2008 be expunged from the record.

The petition is **dismissed**.

On May 29, 2008, a Notice of Non-Compliant Amendment (Notice) was mailed indicating that the amendment filed April 28, 2008 did not comply with the governing regulations. A telephone interview was then conducted between the petitioner, the examiner, and the examiner's supervisor regarding the merits of this Notice. The examiner provided a summary of this interview on pages 2 and 3 of the Office communication mailed October 16, 2008 with an emphasis on statements made by petitioner during the interview.

37 CFR 1.59 provides for the applicant's request for expungement of information in a patent application, other than the original papers upon which the filing date was granted. However, under the terms of the rule, petitioner "must ...establish to the satisfaction of the Director that the expungement of the information is appropriate..." See 37 CFR 1.59(b). Under the circumstances of this case, petitioner has not met his burden of proof.

While petitioner may disagree with some of the contents of the contested Office communication, the USPTO has long held that a mere difference in opinion does not warrant expungement of part or all of a contested communication from the file record. See, e.g., Ex Parte Fox, 1910 Dec. Commissioner Pat. 123 (Comm'r Pat. 1910). The MPEP makes clear that the expungement of record information should occur in very limited situations. See MPEP 724.05. That particular section of the MPEP and referenced-sections (e.g., MPEP § 724.02) address the following types of information as subject (or susceptible) to possible expungement:

1) trade secret information;

2) proprietary information;
3) protective order material;
4) unintentionally-submitted information; and
5) information submitted in a wrong application.

While petitioner does not indicate the standard under which to "strike out" the offending pages, the above situations are known types of circumstances which have led to information expungement. Clearly none of the above apply here. Petitioner has not alleged that the contested Office communication includes any trade secret, is proprietary in nature, or is subject to a protective order. It is also evident that the information was not wrongly submitted.

Furthermore, expungement of an Office communication would be justified where that Office communication contained inappropriate statements that were not suitable for retention in the administrative record. Cf. 37 CFR 1.3, which requires that applicants must conduct their business with the USPTO with decorum and courtesy. Even where expungement is warranted under § 1.3 for an Office communication, a redacted version is maintained in the file; only the offensive language is removed.

However, pages 2 and 3 present numerous factual statements regarding matters that occurred in the telephone interview as witnessed by the examiner and his supervisor. The examiner does offer the conclusion on page 3 that petitioner's statements in the interview violate 37 CFR 1.3, but this is in relation to his statement of § 1.3. The importance of recording the substance of an interview is discussed in MPEP 713.04. While the use of form PTOL-413 by the examiner is preferred for recording the substance of an interview, events of the interview were recorded nonetheless. Also, recordation should include as appropriate:

(A) a brief description of the nature of any exhibit shown or any demonstration conducted;
(B) identification of the claims discussed;
(C) identification of specific prior art discussed;
(D) identification of the principal proposed amendments of a substantive nature discussed;
(E) the general thrust of the principal arguments of the applicant and the examiner, even where the interview is initiated by the examiner. The identification of arguments need not be lengthy or elaborate. A verbatim or highly detailed description of the arguments is not required. The identification of the arguments is sufficient if the general nature or thrust of the principal arguments can be understood in the context of the application file;
(F) a general indication of any other pertinent matters discussed; and
(G) the general results or outcome of the interview.

Many of the statements presented appear to satisfy items D-G above.

To date, petitioner has not yet filed a summary of the interview as it was witnessed by him. MPEP 713.04 notes that, in accordance with 37 CFR §§ 1.2 and 1.133(b), applicant or his attorney or agent has the responsibility of making the substance of an interview of record in the application file, and that the examiner has the responsibility to see that such a record is made and

to correct material inaccuracies which bear directly on the question of patentability. Petitioner should file an interview summary to ensure that the substance of the interview is made of record.

Also, in the event that a renewed petition to expunge is filed, petitioner must specifically refute the veracity of each statement that he contends is false, rather than broadly alleging that false statements are present. This is necessary since only offensive language would be removed under § 1.3 and none of the statements at issue here, if true, appear to be inappropriate such that they are not suitable for retention in the administrative record.

Accordingly, no adequate basis is given or apparent for expunging the contested portion of the Office communication, and the USPTO sees no reason to exercise its discretion to deviate from, or expand upon, the above long-established reasons for expungement. See, e.g., Saxbe v. Bustos, 419 U.S. 65, 74 (1974) (acknowledging an agency's right to maintain a "longstanding administrative construction").

While the statements at issue may reflect poorly on petitioner, there is no concern that they will reflect poorly on the USPTO or its employees if the statements are true, contrary to petitioner's assertion. The USPTO strives to maintain a complete record of proceedings in the prosecution of an application and desires to conduct its business with transparency. Truthful statements made on the record during the prosecution of the application will not be removed. Such transparency and accurate record keeping reflect well on the USPTO.

In regard to petitioner's request that a new examiner be assigned to the application, a separate request must be filed for examiner reassignment and this request must be directed to the appropriate branch of the office. See 37 CFR 1.4(c). In this instance, the request should be in the form of a petition under 37 CFR 1.181 to the Technology Center Director to whom the examiner and his supervisor report.

Telephone inquiries concerning this communication should be directed to Christopher Bottorff at (571)272-6692.

David Buoci
Petitions Examiner
Office of Petitions

UNITED STATES PATENT AND TRADEMARK OFFICE

Commissioner for Patents
United States Patent and Trademark Office
P.O. Box 1450
Alexandria, VA 22313-1450
www.uspto.gov

ARENT FOX PLLC
1050 CONNECTICUT AVENUE, N.W.
SUITE 400
WASHINGTON, DC 20036

COPY MAILED
NOV 21 2005
OFFICE OF PETITIONS

In re Application of	:	
Pickford	:	Decision Noting Joinder of Inventor and
Application No. 11/141,209	:	Decision Dismissing Any Request for
Filed: June 1, 2005	:	Status Under 37 CFR 1.47 as Moot
Attorney Docket No. 026083-00050	:	

This is a decision in response to the petition under 37 CFR 1.47(b) filed September 1, 2005, and supplemented on September 16, 2005.

The petition is **dismissed as moot**.

The application was not filed with an executed oath or declaration.

Petitioner timely filed the instant petition on September 1, 2005, in response to a Notice of Missing Parts mailed July 1, 2005.

Supplemental papers filed on September 16, 2005, include a declaration signed by the previously non-signing inventor in compliance with 37 CFR 1.63.

In view of the joinder of the inventor, further consideration under Rule 1.47(b) is unnecessary and the petition is moot.

The fee for a petition under 37 CFR 1.47(b) is $200. Petitioner submitted $130. Therefore, $70 has been charged to petitioner's deposit account.

The Office of Initial Patent Examination will be informed of the instant decision so that it may continue taking steps to prepare the application for examination.

Telephone inquiries regarding this communication should be directed to Petitions Attorney Steven Brantley at (571) 272-3203.

Charles Steven Brantley
Senior Petitions Attorney
Office of Petitions

UNITED STATES PATENT AND TRADEMARK OFFICE

UNITED STATES DEPARTMENT OF COMMERCE
United States Patent and Trademark Office
Address: COMMISSIONER FOR PATENTS
P.O. Box 1450
Alexandria, Virginia 22313-1450
www.uspto.gov

WESTMAN CHAMPLIN & KELLY, P.A.
SUITE 1400
900 SECOND AVENUE SOUTH
MINNEAPOLIS, MN 55402

Mail Date: 04/21/2010

Applicant	: John S. Philbrook	: DECISION ON REQUEST FOR
Patent Number	: 7642786	: RECALCULATION of PATENT
Issue Date	: 01/05/2010	: TERM ADJUSTMENT IN VIEW
Appliction No	: 11/141,234	: OF WYETH AND NOTICE OF INTENT TO
Filed	: 05/31/2005	: ISSUE CERTIFICATE OF CORRECTION
		:

The Request for Recalculation is **GRANTED** to the extent indicated.

The patent term adjustment has been determined to be **716** days. The USPTO will *sua sponte* issue a certificate of correction reflecting the amount of PTA days determined by the recalculation.

Prior to the issuance of the certificate of correction, the USPTO will afford patentee an opportunity to be heard and request reconsideration. Accordingly, patentee has **one month or thirty (30) days**, whichever is longer, to file a request for reconsideration of this patent term adjustment calculation. See 35 U.S.C. 154(b)(3)(B)(ii) and 37 CFR 1.322(a)(4). No extensions of time will be granted under 37 CFR 1.136.

Patentee should use document code PET.OP if electronically filing a request for reconsideration of this patent term adjustment calculation. The patentee must also include the information required by 37 CFR 1.705(b)(2) and the fee required by 37 CFR 1.18(e). If patentee does not file a timely request for reconsideration of this patent term adjustment calculation including the information required by 37 CFR 1.705(b)(2) and the fee required by 37 CFR 1.18(e), the USPTO will issue a certificate of correction reflecting the PTA determination noted above.

Patentee should be aware that in order to preserve the right to review in the United States District Court for the District of Columbia of the USPTO patent term adjustment determination, patentee must ensure that he or she also take the steps required under 35 U.S.C. 154(b)(4)(A) in a timely manner. Nothing in the request for recalculation should be construed as providing an alternative time frame for commencing a civil action under 35 U.S.C. 154(b)(4)(A).

Any questions concerning this decision should be directed to the Office of Patent Legal Administration at 571-272-7702.

UNITED STATES PATENT AND TRADEMARK OFFICE

Commissioner for Patents
United States Patent and Trademark Office
P.O. Box 1450
Alexandria, VA 22313-1450
www.uspto.gov

Wayne L. Tang
MAYER, BROWN, ROWE, & MAW LLP
P.O. Box 2828
Chicago IL 60690-2828

COPY MAILED

AUG 2 0 2007

OFFICE OF PETITIONS

In re Application of	:	
Todd J. Broms et al.	:	
Application No. 11/141,243	:	DECISION ON PETITION
Filed: May 31, 2005	:	TO MAKE SPECIAL UNDER
Attorney Docket No. 05019256	:	37 CFR 1.102(c)(1)
	:	

This is a decision on the petition under 37 CFR 1.102(c)(1), filed July 3, 2007, to make the above-identified application special based on applicant's age as set forth in M.P.E.P. § 708.02, Section IV.

The petition is **GRANTED**.

A grantable petition to make an application special under 37 CFR 1.102(c)(1) and MPEP § 708.02, Section IV: Applicant's Age must be accompanied by evidence showing that at least one of the applicants is 65 years of age, or more, such as a birth certificate or a statement by applicant. No fee is required

The instant petition includes a statement from one of the applicants declaring that he is 65 years of age or older. Accordingly, the above-identified application has been accorded "special" status.

Telephone inquiries concerning this decision should be directed to Terri Williams at 571-272-2991.

All other inquiries concerning either the examination or status of the application should be directed to the Technology Center.

The application is being forwarded to the Technology Center Art Unit 3694 for action on the merits commensurate with this decision.

T. Williams

Terri Williams
Petitions Examiner
Office of Petitions

UNITED STATES PATENT AND TRADEMARK OFFICE

Commissioner for Patents
United States Patent and Trademark Office
P.O. Box 1450
Alexandria, VA 22313-1450
www.uspto.gov

TOLER SCHAFFER, LLP
5000 PLAZA ON THE LAKES
SUITE 265
AUSTIN, TX 78746

COPY MAILED

SEP 1 1 2006

OFFICE OF PETITIONS

In re Application of	:	
Harris, et al.	:	
Application No. 11/141,244	:	DECISION ON PETITION
Filed: May 31, 2005	:	TO WITHDRAW
Attorney Docket No. 1039-0180-US	:	FROM RECORD
	:	

This is a decision on the Request to Withdraw as attorney or agent of record under 37 C.F.R. § 1.36(b), filed May 19, 2006.

The request is **NOT APPROVED**.

A grantable request to withdraw as attorney/agent of record must be signed by every attorney/agent seeking to withdraw or contain a clear indication that one attorney is signing on behalf of another/others. A request to withdraw will not be approved unless at least 30 (thirty) days would remain between the date of approval and the later of the expiration date of a time to file a response or the expiration date of the maximum time period which can be extended under 37 C.F.R. § 1.136(a).

The request cannot be approved because no reasons for withdrawal have been provided. The Office cannot, at this time, determine whether practitioner's request is one of the mandatory or permissive reasons enumerated in 37 CFR 10.40. Any subsequent requests must include reasons for withdrawal. Please note that there is a space provided for on PTO/SB/83 (Request to Withdraw as Attorney or Agent) to supply practitioner's reasons.

All future communications from the Office will continue to be directed to the above-listed address until otherwise notified by applicant.

Telephone inquiries concerning this decision should be directed to April Wise at 571-272-1642.

April M. Wise
Petitions Examiner
Office of Petitions

cc: LARSON NEWMAN ABEL
POLANSKY & WHITE, LLP
5914 WEST COURTYARD DRIVE
SUITE 200
AUSTIN, TX 78730

UNITED STATES PATENT AND TRADEMARK OFFICE

Commissioner for Patents
United States Patent and Trademark Office
P.O. Box 1450
Alexandria, VA 22313-1450
www.uspto.gov

Customer# 43214
EMPK & SHILOH, LLP
116 JOHN ST.
SUITE 1201
NEW YORK, NY 10038

COPY MAILED

AUG 2 3 2007

OFFICE OF PETITIONS

In re Application of	:	
RICHARDSON, Eitan et al.	:	
Application No. 11/141,248	:	DECISION ON PETITION
Filed: May 31, 2005	:	TO WITHDRAW
Attorney Docket No. **ELG-P-9019-US**	:	FROM RECORD
	:	

This is a decision on the Request to Withdraw as attorney or agent of record under 37 C.F.R. § 1.36(b), filed June 29, 2007.

The request is **NOT APPROVED**.

A grantable request to withdraw as attorney/agent of record must be signed by every attorney/agent seeking to withdraw or contain a clear indication that one attorney is signing on behalf of another/others. A request to withdraw will not be approved unless at least 30 (thirty) days would remain between the date of approval and the later of the expiration date of a time to file a response or the expiration date of the maximum time period which can be extended under 37 C.F.R. § 1.136(a).

The request to withdraw less than all attorneys appointed by customer number 43214 cannot be approved. The addition and/or deletion of a practitioner from the list of practitioners associated with a Customer Number should be made by submitting a "Request for Customer Number Data Change" (PTO/SB/124) which will result in the addition or deletion of such practitioner from the list of persons authorized to represent any applicant or assignee of the entire interest who appointed all of the practitioners associated with such Customer Number. See MPEP 403 Section I. Customer Number Practice.

All future communications from the Office will continue to be directed to the above-listed address until otherwise notified by applicant.

Telephone inquiries concerning this decision should be directed to Michelle R. Eason at 571-272- 4231.

Terri Williams

Terri Williams
Petitions Examiner
Office of Petitions

cc: **Customer# 56639**
EMPK & SHILOH, LLP
116 JOHN ST,
SUITE 1201
NEW YORK, NY 10038

UNITED STATES PATENT AND TRADEMARK OFFICE

UNITED STATES DEPARTMENT OF COMMERCE
United States Patent and Trademark Office
Address: COMMISSIONER FOR PATENTS
P.O. Box 1450
Alexandria, Virginia 22313-1450
www.uspto.gov

SEED INTELLECTUAL PROPERTY LAW GROUP PLLC
701 FIFTH AVENUE, SUITE 5400
SEATTLE, WA 98104-7092

Mail Date: 04/21/2010

Applicant	: Tino Copani	: DECISION ON REQUEST FOR
Patent Number	: 7663414	: RECALCULATION of PATENT
Issue Date	: 02/16/2010	: TERM ADJUSTMENT IN VIEW
Appliction No	: 11/141,252	: OF WYETH AND NOTICE OF INTENT TO
Filed	: 05/31/2005	: ISSUE CERTIFICATE OF CORRECTION
		:

The Request for Recalculation is **GRANTED** to the extent indicated.

The patent term adjustment has been determined to be **231** days. The USPTO will *sua sponte* issue a certificate of correction reflecting the amount of PTA days determined by the recalculation.

Prior to the issuance of the certificate of correction, the USPTO will afford patentee an opportunity to be heard and request reconsideration. Accordingly, patentee has **one month or thirty (30) days**, whichever is longer, to file a request for reconsideration of this patent term adjustment calculation. See 35 U.S.C. 154(b)(3)(B)(ii) and 37 CFR 1.322(a)(4). No extensions of time will be granted under 37 CFR 1.136.

Patentee should use document code PET.OP if electronically filing a request for reconsideration of this patent term adjustment calculation. The patentee must also include the information required by 37 CFR 1.705(b)(2) and the fee required by 37 CFR 1.18(e). If patentee does not file a timely request for reconsideration of this patent term adjustment calculation including the information required by 37 CFR 1.705(b)(2) and the fee required by 37 CFR 1.18(e), the USPTO will issue a certificate of correction reflecting the PTA determination noted above.

Patentee should be aware that in order to preserve the right to review in the United States District Court for the District of Columbia of the USPTO patent term adjustment determination, patentee must ensure that he or she also take the steps required under 35 U.S.C. 154(b)(4)(A) in a timely manner. Nothing in the request for recalculation should be construed as providing an alternative time frame for commencing a civil action under 35 U.S.C. 154(b)(4)(A).

Any questions concerning this decision should be directed to the Office of Patent Legal Administration at 571-272-7702.

UNITED STATES PATENT AND TRADEMARK OFFICE

Commissioner for Patents
United States Patent and Trademark Office
P.O. Box 1450
Alexandria, VA 22313-1450
www.uspto.gov

MYERS BIGEL SIBLEY & SAJOVEC
PO BOX 37428
RALEIGH, NC 27627

COPY MAILED

MAR 29 2006

OFFICE OF PETITIONS

In re Application of
Geum-Jong Bae et al.
Application No. 11/141,275
Filed: June 1, 2005
Attorney Docket No. 5649-839CTDV

ON PETITION

This is a decision on the petition under 37 CFR 1.10 (c) filed February 28, 2006 to correct the filing date to May 31, 2005, rather than the presently accorded filing date of June 1, 2005.

Petitioners request the earlier filing date on the basis that the application was purportedly deposited in Express Mail service on May 31, 2005, pursuant to the requirements of 37 CFR 1.10. While the petition lists as enclosures, a copy of the Express Mail Receipt and a post card receipt, the only evidence submitted was a copy of the Application Transmittal and the Filing Receipt.

Paragraph (a) of 37 CFR 1.10 states that:

> Any correspondence received by the Patent and Trademark Office (Office) that was delivered by the "Express Mail Post Office to Addressee" service of the United States Postal Service (USPS) will be considered filed in the Office on the date of deposit with the USPS. The date of deposit with the USPS is shown by the "date-in" on the "Express Mail" mailing label or other official USPS notation. If the USPS deposit date cannot be determined, the correspondence will be accorded the Office receipt date as the filing date.[1] (emphasis added)

Paragraph (c) of 37 CFR 1.10 states that:

> Any person filing correspondence under 37 CFR 1.10 that was received by the Office and delivered by the "Express Mail Post Office to Addressee" service of the USPS, who can show a discrepancy between the filing date accorded by the Office to the correspondence and the date of deposit as shown by the "date-in" on the "Express Mail" mailing label or other USPS notation, may petition the

[1] See 37 CFR 1.6(a).

Commissioner to accord the correspondence a filing date as of the "date-in" on the "Express Mail" mailing label or other official USPS notation, provided that:
(1) The petition is filed promptly after the person becomes aware that the Office has accorded, or will accord, a filing date other than the USPS deposit date;
(2) The number of the "Express Mail" mailing label was placed on the papers or fees that constitute the correspondence prior to the original mailing by "Express Mail;" and
(3) The petition includes a true copy of the "Express Mail" mailing label showing the "date-in," and of any other official notation by the USPS relied upon to show the date of deposit.

A grantable petition under 37 CFR 1.10(c) must include "a showing which establishes, to the satisfaction of the Commissioner, that the requested filing date was the date the correspondence was deposited in "Express Mail Post Office to Addressee" service **prior to the last scheduled pickup for that day**. In addition, the showing "must be corroborated by evidence from the USPS or that came into being after deposit and within one business day of the deposit of the correspondence in the 'Express Mail Post Office to Addressee' service of the USPS."

Petitioners have not provided a true copy of the "Express Mail" customer label nor explained why a copy of the Express Mail customer label showing the "date in" has not been provided. Any renewed petition must be accompanied by a copy of the Express Mail label showing the "date in" as completed by the USPS.

Accordingly, the petition is **DISMISSED**.

The application has been accorded a filing date of June 1, 2005 and no evidence has been submitted to accord any other filing date other than June 1, 2005. In view thereof, petitioner's deposit account no. 50-0220 has been charged in the amount of $400.00 for review of the petition.

This matter is therefore being referred to Technology Center 2811 to be examined in due course.

Telephone inquiries concerning this matter may be directed to the undersigned Petitions Attorney at (571) 272-3212.

Patricia Faison-Ball

Patricia Faison-Ball
Senior Petitions Attorney
Office of Petitions

UNITED STATES PATENT AND TRADEMARK OFFICE

Commissioner for Patents
United States Patent and Trademark Office
P.O. Box 1450
Alexandria, VA 22313-1450
www.uspto.gov

MYERS BIGEL SIBLEY & SAJOVEC
PO BOX 37428
RALEIGH, NC 27627

COPY MAILED

FEB 2 2 2007

OFFICE OF PETITIONS

In re Application of :
Geum-Jong Bae et al. :
Application No. 11/141,275 : ON PETITION
Filed: June 1, 2005 :
Attorney Docket No. 5649-839CTDV :

This is a decision on the "Second Petition To Accord the Proper Filing Date", filed December 26, 2006, requesting that the above-identified application be accorded a filing date of May 31, 2005, rather than the presently accorded filing date of June 1, 2005. The petition is treated under 37 CFR 1.10(c). The petition is a request for reconsideration of the decision mailed March 29, 2006 dismissing the petition filed February 28, 2006.

Petitioner alleges that the application was deposited in Express Mail service on May 31, 2005. In support, petitioner supplies a copy of Express Mail receipt No. EV674758633US (the same Express Mail number found on the itemized transmittal sheet accompanying the original application papers located in the official file). The "date-in" on the Express Mail Label is May 31, 2005. Additionally, a postcard receipt date stamped May 31, 2005 by the USPTO is submitted as proof of the filing date.

In view of the above, the petition is GRANTED. The petition fee in the amount of $400 will be credited back to petitioner's deposit account no. 50-0220.

The application is being forwarded to the Office of Initial Patent Examination for correction of the filing date to May 31, 2005, **not June 1, 2005** and for issuance of a corrected filing receipt.

Telephone inquiries related to this matter should be directed to the undersigned Petitions Attorney at (571) 272-3212.

Patricia Faison-Ball

Patricia Faison-Ball
Senior Petitions Attorney
Office of Petitions

UNITED STATES PATENT AND TRADEMARK OFFICE

UNITED STATES DEPARTMENT OF COMMERCE
United States Patent and Trademark Office
Address: COMMISSIONER FOR PATENTS
P.O. Box 1450
Alexandria, Virginia 22313-1450
www.uspto.gov

E I DU PONT DE NEMOURS AND COMPANY
LEGAL PATENT RECORDS CENTER
BARLEY MILL PLAZA 25/1122B
4417 LANCASTER PIKE
WILMINGTON, DE 19805

Mail Date: 04/20/2010

Applicant	: Roger Harquail French	: DECISION ON REQUEST FOR
Patent Number	: 7589242	: RECALCULATION of PATENT
Issue Date	: 09/15/2009	: TERM ADJUSTMENT IN VIEW
Appliction No	: 11/141,285	: OF WYETH AND NOTICE OF INTENT TO
Filed	: 09/14/2005	: ISSUE CERTIFICATE OF CORRECTION
		:

The Request for Recalculation is **GRANTED** to the extent indicated.

The patent term adjustment has been determined to be **572** days. The USPTO will *sua sponte* issue a certificate of correction reflecting the amount of PTA days determined by the recalculation.

Prior to the issuance of the certificate of correction, the USPTO will afford patentee an opportunity to be heard and request reconsideration. Accordingly, patentee has **one month or thirty (30) days**, whichever is longer, to file a request for reconsideration of this patent term adjustment calculation. See 35 U.S.C. 154(b)(3)(B)(ii) and 37 CFR 1.322(a)(4). No extensions of time will be granted under 37 CFR 1.136.

Patentee should use document code PET.OP if electronically filing a request for reconsideration of this patent term adjustment calculation. The patentee must also include the information required by 37 CFR 1.705(b)(2) and the fee required by 37 CFR 1.18(e). If patentee does not file a timely request for reconsideration of this patent term adjustment calculation including the information required by 37 CFR 1.705(b)(2) and the fee required by 37 CFR 1.18(e), the USPTO will issue a certificate of correction reflecting the PTA determination noted above.

Patentee should be aware that in order to preserve the right to review in the United States District Court for the District of Columbia of the USPTO patent term adjustment determination, patentee must ensure that he or she also take the steps required under 35 U.S.C. 154(b)(4)(A) in a timely manner. Nothing in the request for recalculation should be construed as providing an alternative time frame for commencing a civil action under 35 U.S.C. 154(b)(4)(A).

Any questions concerning this decision should be directed to the Office of Patent Legal Administration at 571-272-7702.

UNITED STATES PATENT AND TRADEMARK OFFICE

Commissioner for Patents
United States Patent and Trademark Office
P.O. Box 1450
Alexandria, VA 22313-1450
www.uspto.gov

MARRELL HANEY
1301 WEST 96TH STREET
CHICAGO, IL 60643

COPY MAILED

JUN 15 2006

OFFICE OF PETITIONS

In re Application of :
Haney, Marrell :
Application No. 11/141,289 :
Filed: May 31, 2005 :
Title: TRANSPORT VEHICLE WITH :
LIFTING DEVICES

ON PETITION

This is a decision on the petition under 37 CFR 1.102(c)(1), filed May 10, 2006, to make the above-identified application special based on applicant's age as set forth in M.P.E.P. § 708.02, Section IV.

The petition is **GRANTED**.

A grantable petition to make an application special under 37 CFR 1.102(c)(1) and MPEP § 708.02, Section IV: Applicant's Age must be accompanied by evidence showing that at least one of the applicants is 65 years of age, or more, such as a birth certificate or a statement by applicant. No fee is required.

The instant petition includes a statement from the applicant, Marrell Haney. Accordingly, the above-identified application has been accorded "special" status.

Telephone inquiries concerning this decision should be directed to the undersigned at 571-272-3206.

All other inquiries concerning either the examination or status of the application should be directed to the Technology Center. This matter is being referred to the Technology Center Art Unit 3652 for action on the merits commensurate with this decision.

Liana Chase
Petitions Examiner
Office of Petitions

UNITED STATES PATENT AND TRADEMARK OFFICE

COMMISSIONER FOR PATENTS
UNITED STATES PATENT AND TRADEMARK OFFICE
P.O. BOX 1450
ALEXANDRIA, VA 22313-1450
www.uspto.gov

Marrell Haney
1301 West 96th Street
Chicago, IL 60643

COPY MAILED

NOV 08 2007

OFFICE OF PETITIONS

ON PETITION

In re Application of	:	
Marrell Haney	:	
Application No. 11/141,289	:	
Filed: May 31, 2005	:	
Attorney Docket No. N/A	:	

This is a decision on the petition under 37 CFR 1.137(b), filed on August 15, 2007, to revive the above-identified application.

The application became abandoned for failure to submit a proper reply to the final Office action mailed January 12, 2007.

The petition satisfies the requirements of 37 CFR 1.137(b), in that, petitioner has supplied (1) the reply in the form of a Notice of Appeal with the $250fee; (2) the petition fee of $750; and (3) a proper statement of unintentional delay. Therefore, the petition is **GRANTED**.

The two-month period for filing an appeal brief under 37 CFR 41.37 (accompanied by the fee required by 37 CFR 41.20(b)(2)), runs from the date of this decision.

If the appeal brief and $255 fee are not timely submitted, the above application will again become abandoned.

This application file is being referred to Technology Center Art Unit 3652.

Telephone inquiries concerning this decision should be directed to the undersigned at (571) 272-3226.

Andrea Smith
Petitions Examiner
Office of Petitions

UNITED STATES PATENT AND TRADEMARK OFFICE

Commissioner for Patents
United States Patent and Trademark Office
P.O. Box 1450
Alexandria, VA 22313-1450
www.uspto.gov

COPY MAILED

SEP 1 5 2009

OFFICE OF PETITIONS

LERNER GREENBERG STEMER LLP
P O BOX 2480
HOLLYWOOD FL 33022-2480

In re Application of	:	
Karl Heinz Gast	:	
Application No. 11/141,294	:	DECISION ON PETITION
Filed: May 31, 2005	:	TO WITHDRAW
Attorney Docket No. MOH-P040106	:	FROM RECORD
	:	

This is a decision on the Request to Withdraw as attorney or agent of record under 37 C.F.R. § 1.36(b), filed August 5, 2009.

The request is **APPROVED**.

A grantable request to withdraw as attorney/agent of record must be signed by every attorney/agent seeking to withdraw or contain a clear indication that one attorney is signing on behalf of another/others. A request to withdraw will not be approved unless at least 30 (thirty) days would remain between the date of approval and the later of the expiration date of a time to file a response or the expiration date of the maximum time period which can be extended under 37 C.F.R. § 1.136(a).

The request was signed by Werner H. Stemer on behalf of attorney/agents associated with customer number 24131. All attorneys/agents associated with customer number 24131 have been withdrawn.

Applicant is reminded that there is no attorney of record at this time.

The correspondence address has been changed and is copied below.

Telephone inquiries concerning this decision should be directed to Kimberly Inabinet at 571-272-4618.

Kimberly Inabinet
Petitions Examiner
Office of Petitions

cc: Karl Heinz Gast
Röthenhäckerstrasse 40
Aurachtal, Germany 91086

UNITED STATES PATENT AND TRADEMARK OFFICE

UNITED STATES DEPARTMENT OF COMMERCE
United States Patent and Trademark Office
Address: COMMISSIONER FOR PATENTS
P.O. Box 1450
Alexandria, Virginia 22313-1450
www.uspto.gov

APPLICATION NUMBER	FILING OR 371(C) DATE	FIRST NAMED APPLICANT	ATTY. DOCKET NO./TITLE
11/141,294	05/31/2005	Karl Heinz Gast	MOH-P040106

CONFIRMATION NO. 8603

POWER OF ATTORNEY NOTICE

24131
LERNER GREENBERG STEMER LLP
P O BOX 2480
HOLLYWOOD, FL 33022-2480

OC000000037798870

Date Mailed: 09/14/2009

NOTICE REGARDING CHANGE OF POWER OF ATTORNEY

This is in response to the Power of Attorney filed 08/05/2009.

- The withdrawal as attorney in this application has been accepted. Future correspondence will be mailed to the new address of record. 37 CFR 1.33.

/kainabinet/

Office of Data Management, Application Assistance Unit (571) 272-4000, or (571) 272-4200, or 1-888-786-0101

UNITED STATES PATENT AND TRADEMARK OFFICE

Commissioner for Patents
United States Patent and Trademark Office
P.O. Box 1450
Alexandria, VA 22313-1450
www.uspto.gov

ADAMS EVANS PA
2180 TWO WACHOVIA CENTER
301 SOUTH TRYON STREET
CHARLOTTE, NC 28282

COPY MAILED

DEC 14 2005

OFFICE OF PETITIONS

In re Application of	:
Said Nakhla et al	:
Application No. 11/141,295	: DECISION REFUSING STATUS
Filed: May 31, 2005	: UNDER 37 CFR 1.47(a)
Attorney Docket No. 3144/25	:

This is in response to the petition under 37 CFR 1.47(a), filed October 17, 2005.

The petition is dismissed.

Rule 47 applicant is given TWO MONTHS from the mailing date of this decision to reply, correcting the below-noted deficiencies. Any reply should be entitled "Request for Reconsideration of Petition Under 37 CFR 1.47(a)," and should only address the deficiencies noted below, except that the reply may include an oath or declaration executed by the nonsigning inventor. **FAILURE TO RESPOND WILL RESULT IN ABANDONMENT OF THE APPLICATION.** Any extensions of time will be governed by 37 CFR 1.136(a).

On June 30, 2005, a Notice to File Missing Parts of Nonprovisional Application was mailed setting a two month period for submitting the items required thereon; namely, an executed oath or declaration in compliance with 37 CFR 1.63 and a $130 surcharge for the late filing of the executed oath or declaration.

In response, on October 17, 2005, an executed declaration by joint inventor Said Nakhla, but not by joint inventor Cherie Alexander, the $130 surcharge fee, the $200 fee for the instant petition under 37 CFR 1.47(a), and a two month extension of time fee of $450 were submitted.

A grantable petition under 37 CFR 1.47(a) requires: (1) proof that the nonsigning inventor cannot be reached or refuses to sign the oath or declaration after having been presented with the application papers (specification, claims and drawings); (2) an acceptable oath or declaration in compliance with 35 U.S.C. §§

115 and 116; (3) the petition fee; and (4) a statement of the last known address of the nonsigning inventor. Applicant lacks items (1) and (4) set forth above.

As to item (1), rule 47 applicant must demonstrate with documented evidence that an inventor refuses to join in the application after having been presented with the application papers (specification, claims, drawings and oath or declaration). There is no indication in the present case whether joint inventor Cherie Alexander was presented with a copy of the complete application papers for the instant nonprovisional application. From the evidence of record, it only appears that joint inventor Alexander was presented with a copy of a Power of Attorney, Declaration and Assignment. If joint inventor Alexander was not presented with a copy of the application papers for the instant nonprovisional application, then joint inventor Alexander could not attest that she has "reviewed and understands the application papers" and could not execute the declaration she was requested to sign. Did joint inventor Alexander receive a copy of the application papers? Unless petitioner can show that a copy of the application papers was presented to joint inventor Alexander, then petitioner will have to mail a copy of the complete application papers (specification, claims and drawings) to the last known address of joint inventor Alexander, return receipt requested. A cover letter of instructions should accompany the mailing of the application papers setting a deadline or a statement that no response will constitute a refusal. This sort of ultimatum lends support to a finding of refusal by conduct. **The proof of the pertinent events should be made by a statement of someone with firsthand knowledge of the events and should include documentary evidence, such as certified mail return receipt, cover letter of instructions, telegram, etc.** See MPEP 409.03(d).

Where there is an express or oral refusal, that fact, along with the time and place of the refusal, must be stated in an affidavit or declaration **by the party to whom the refusal was made.** Where there is a written refusal, a copy of the document(s) evidencing that refusal must be made part of the affidavit or declaration.

When it is concluded by the rule 47 applicant that an omitted inventor's conduct constitutes a refusal, all facts upon which that conclusion is based should be stated in an affidavit or declaration. If there is documentary evidence to support facts alleged in the affidavit or declaration, such evidence must be submitted.

Whenever an omitted inventor gives a reason for refusing to sign the application oath or declaration, that reason should be stated in the affidavit or declaration.

As to item (4), a statement of the inventor's last known address is missing and is required.

Further correspondence with respect to this matter should be addressed as follows:

By mail: Mail Stop PETITIONS
Commissioner for Patents
Post Office Box 1450
Alexandria, VA 22313-1450

By hand: Customer Service Window
Mail Stop Petitions
Randolph Building
401 Dulany Street
Alexandria, VA 22314

By fax: (571) 273-8300
ATTN: Office of Petitions

Any questions concerning this matter may be directed to the undersigned at (571) 272-3218.

Frances Hicks

Frances Hicks
Petitions Examiner
Office of Petitions

UNITED STATES PATENT AND TRADEMARK OFFICE

Commissioner for Patents
United States Patent and Trademark Office
P.O. Box 1450
Alexandria, VA 22313-1450
www.uspto.gov

ADAMS EVANS PA
2180 TWO WACHOVIA CENTER
301 SOUTH TRYON STREET
CHARLOTTE, NC 28282

COPY MAILED
APR 19 2006
OFFICE OF PETITIONS

In re Application of	:	
Said Nakhla et al	:	
Application No. 11/141,295	:	ON PETITION
Filed: May 31, 2005	:	
Attorney Docket No. 3144/25	:	

This is in response to the request, filed February 13, 2006, seeking reconsideration of the decision mailed December 14, 2005, which refused to accord 37 CFR 1.47(a) status to the above-identified application.

The petition is **GRANTED.**

Petitioner has shown that the non-signing inventor, Cherie Alexander, has refused to join in the filing of the above-identified application by not returning, within the deadline set in the letter dated December 21, 2005, an executed declaration after having been presented with a copy of the application papers. Further, the petition sets forth the last known address of the inventor Alexander, which was missing from the originally filed petition.

The application and papers have been reviewed and found in compliance with 37 CFR 1.47(a). This application is hereby accorded Rule 1.47(a) status.

As provided in 37 CFR 1.47(c), this Office will forward notice of this application's filing to the non-signing inventor at the address given in the petition. Notice of the filing of this application will also be published in the Official Gazette.

Telephone inquiries regarding this decision should be directed to the undersigned at (571) 272-3218.

Frances Hicks
Petitions Examiner
Office of Petitions

UNITED STATES PATENT AND TRADEMARK OFFICE

UNITED STATES DEPARTMENT OF COMMERCE
United States Patent and Trademark Office
Address: COMMISSIONER FOR PATENTS
P.O. Box 1450
Alexandria, Virginia 22313-1450
www.uspto.gov

KNOBLE, YOSHIDA & DUNLEAVY
EIGHT PENN CENTER
SUITE 1350, 1628 JOHN F KENNEDY BLVD
PHILADELPHIA, PA 19103

Mail Date: 04/21/2010

Applicant	: Tim Haley	: DECISION ON REQUEST FOR
Patent Number	: 7571827	: RECALCULATION of PATENT
Issue Date	: 08/11/2009	: TERM ADJUSTMENT IN VIEW
Appliction No	: 11/141,322	: OF WYETH AND NOTICE OF INTENT TO
Filed	: 06/01/2005	: ISSUE CERTIFICATE OF CORRECTION
		:

The Request for Recalculation is **GRANTED** to the extent indicated.

The patent term adjustment has been determined to be **1081** days. The USPTO will *sua sponte* issue a certificate of correction reflecting the amount of PTA days determined by the recalculation.

Prior to the issuance of the certificate of correction, the USPTO will afford patentee an opportunity to be heard and request reconsideration. Accordingly, patentee has **one month or thirty (30) days**, whichever is longer, to file a request for reconsideration of this patent term adjustment calculation. See 35 U.S.C. 154(b)(3)(B)(ii) and 37 CFR 1.322(a)(4). No extensions of time will be granted under 37 CFR 1.136.

Patentee should use document code PET.OP if electronically filing a request for reconsideration of this patent term adjustment calculation. The patentee must also include the information required by 37 CFR 1.705(b)(2) and the fee required by 37 CFR 1.18(e). If patentee does not file a timely request for reconsideration of this patent term adjustment calculation including the information required by 37 CFR 1.705(b)(2) and the fee required by 37 CFR 1.18(e), the USPTO will issue a certificate of correction reflecting the PTA determination noted above.

Patentee should be aware that in order to preserve the right to review in the United States District Court for the District of Columbia of the USPTO patent term adjustment determination, patentee must ensure that he or she also take the steps required under 35 U.S.C. 154(b)(4)(A) in a timely manner. Nothing in the request for recalculation should be construed as providing an alternative time frame for commencing a civil action under 35 U.S.C. 154(b)(4)(A).

Any questions concerning this decision should be directed to the Office of Patent Legal Administration at 571-272-7702.

UNITED STATES PATENT AND TRADEMARK OFFICE

Commissioner for Patents
United States Patent and Trademark Office
P.O. Box 1450
Alexandria, VA 22313-1450
www.uspto.gov

FISH & RICHARDSON P.C.
P.O. BOX 1022
MINNEAPOLIS MN 55440-1022

RECEIVED
DEC 19 2008
OFFICE OF PETITIONS

In re Application of	:	
Christopher A. Pratt et al	:	
Application No. 11/141,335	:	DECISION GRANTING PETITION
Filed: May 31, 2005	:	UNDER 37 CFR 1.313(c)(2)
Attorney Docket No. 17601-135001	:	

This is a decision on the petition under 37 CFR 1.313(c)(2), filed December 18, 2008, to withdraw the above-identified application from issue after payment of the issue fee.

The petition is **GRANTED**.

The above-identified application is withdrawn from issue for consideration of a submission under 37 CFR 1.114 (request for continued examination). *See* 37 CFR 1.313(c)(2).

Petitioner is advised that the issue fee paid on October 24, 2008 cannot be refunded. If, however, this application is again allowed, petitioner may request that it be applied towards the issue fee required by the new Notice of Allowance.[1]

Telephone inquiries should be directed to the undersigned at (571) 272-3208.

This application is being referred to Technology Center AU 3672 for processing of the request for continued examination under 37 CFR 1.114 and for consideration of the concurrently filed **IDS and Request for Suspension of Action.**

/Karen Creasy/
Karen Creasy
Petitions Examiner
Office of Petitions

---

[1] *The request to apply the issue fee to the new Notice may be satisfied by completing and returning the new Part B – Fee(s) Transmittal Form (along with any balance due at the time of submission). Petitioner is advised that the Issue Fee Transmittal Form must be completed and timely submitted to avoid abandonment of the application.*

UNITED STATES PATENT AND TRADEMARK OFFICE

UNITED STATES DEPARTMENT OF COMMERCE
United States Patent and Trademark Office
Address: COMMISSIONER FOR PATENTS
P.O. Box 1450
Alexandria, Virginia 22313-1450
www.uspto.gov

FOLEY HOAG, LLP
PATENT GROUP, WORLD TRADE CENTER WEST
155 SEAPORT BLVD
BOSTON, MA 02110

Mail Date: 04/21/2010

Applicant	: Karen K. Gleason	: DECISION ON REQUEST FOR
Patent Number	: 7618680	: RECALCULATION of PATENT
Issue Date	: 11/17/2009	: TERM ADJUSTMENT IN VIEW
Appliction No	: 11/141,353	: OF WYETH AND NOTICE OF INTENT TO
Filed	: 05/31/2005	: ISSUE CERTIFICATE OF CORRECTION
		:

The Request for Recalculation is **GRANTED** to the extent indicated.

The patent term adjustment has been determined to be **986** days. The USPTO will *sua sponte* issue a certificate of correction reflecting the amount of PTA days determined by the recalculation.

Prior to the issuance of the certificate of correction, the USPTO will afford patentee an opportunity to be heard and request reconsideration. Accordingly, patentee has **one month or thirty (30) days**, whichever is longer, to file a request for reconsideration of this patent term adjustment calculation. See 35 U.S.C. 154(b)(3)(B)(ii) and 37 CFR 1.322(a)(4). No extensions of time will be granted under 37 CFR 1.136.

Patentee should use document code PET.OP if electronically filing a request for reconsideration of this patent term adjustment calculation. The patentee must also include the information required by 37 CFR 1.705(b)(2) and the fee required by 37 CFR 1.18(e). If patentee does not file a timely request for reconsideration of this patent term adjustment calculation including the information required by 37 CFR 1.705(b)(2) and the fee required by 37 CFR 1.18(e), the USPTO will issue a certificate of correction reflecting the PTA determination noted above.

Patentee should be aware that in order to preserve the right to review in the United States District Court for the District of Columbia of the USPTO patent term adjustment determination, patentee must ensure that he or she also take the steps required under 35 U.S.C. 154(b)(4)(A) in a timely manner. Nothing in the request for recalculation should be construed as providing an alternative time frame for commencing a civil action under 35 U.S.C. 154(b)(4)(A).

Any questions concerning this decision should be directed to the Office of Patent Legal Administration at 571-272-7702.

UNITED STATES PATENT AND TRADEMARK OFFICE

UNITED STATES DEPARTMENT OF COMMERCE
United States Patent and Trademark Office
Address: COMMISSIONER FOR PATENTS
P.O. Box 1450
Alexandria, Virginia 22313-1450
www.uspto.gov

GAUTHIER & CONNORS, LLP
225 FRANKLIN STREET
SUITE 2300
BOSTON, MA 02110

Mail Date: 04/21/2010

Applicant	: Frank A. Howell	: DECISION ON REQUEST FOR
Patent Number	: 7644847	: RECALCULATION of PATENT
Issue Date	: 01/12/2010	: TERM ADJUSTMENT IN VIEW
Appliction No	: 11/141,354	: OF WYETH AND NOTICE OF INTENT TO
Filed	: 05/31/2005	: ISSUE CERTIFICATE OF CORRECTION
		:

The Request for Recalculation is **GRANTED** to the extent indicated.

The patent term adjustment has been determined to be **1033** days. The USPTO will *sua sponte* issue a certificate of correction reflecting the amount of PTA days determined by the recalculation.

Prior to the issuance of the certificate of correction, the USPTO will afford patentee an opportunity to be heard and request reconsideration. Accordingly, patentee has **one month or thirty (30) days**, whichever is longer, to file a request for reconsideration of this patent term adjustment calculation. See 35 U.S.C. 154(b)(3)(B)(ii) and 37 CFR 1.322(a)(4). No extensions of time will be granted under 37 CFR 1.136.

Patentee should use document code PET.OP if electronically filing a request for reconsideration of this patent term adjustment calculation. The patentee must also include the information required by 37 CFR 1.705(b)(2) and the fee required by 37 CFR 1.18(e). If patentee does not file a timely request for reconsideration of this patent term adjustment calculation including the information required by 37 CFR 1.705(b)(2) and the fee required by 37 CFR 1.18(e), the USPTO will issue a certificate of correction reflecting the PTA determination noted above.

Patentee should be aware that in order to preserve the right to review in the United States District Court for the District of Columbia of the USPTO patent term adjustment determination, patentee must ensure that he or she also take the steps required under 35 U.S.C. 154(b)(4)(A) in a timely manner. Nothing in the request for recalculation should be construed as providing an alternative time frame for commencing a civil action under 35 U.S.C. 154(b)(4)(A).

Any questions concerning this decision should be directed to the Office of Patent Legal Administration at 571-272-7702.

UNITED STATES PATENT AND TRADEMARK OFFICE

Commissioner for Patents
United States Patent and Trademark Office
P.O. Box 1450
Alexandria, VA 22313-1450
www.uspto.gov

MAILED

DEC 07 2007

TECHNOLOGY CENTER 2100

FOLEY AND LARDNER LLP
SUITE 500
3000 K STREET NW
WASHINGTON DC 20007

In re Application of: KIYOSHI, KATO
Application No. 11/141,398
Filed: June 1, 2005
For: FAILURE RECOVERY APPARATUS, FAILURE RECOVERY METHOD, MANAGER, AND PROGRAM

DECISION ON REQUEST TO PARTICIPATE IN PATENT PROSECUTION HIGHWAY PILOT PROGRAM AND PETITION TO MAKE SPECIAL UNDER 37 CFR 1.102(d)

This is a decision on the request to participate in the Patent Prosecution Highway (PPH) pilot program and the petition under 37 CFR 1.102(d), filed November 7, 2007, to make the above-identified application special.

The petition is **GRANTED**.

A grantable request to participate in the PPH pilot program and petition to make special require:

(1) The U.S. application must validly claim priority under 35 U.S.C. 119(a) to one or more applications filed in the JPO;

(2) Applicant must submit a copy of the allowable/patentable claim(s) from the JPO application(s) along with an English translation thereof and a statement that the English translation is accurate;

(3) All the claims in the U.S. application must sufficiently correspond or be amended to sufficiently correspond to the allowable/patentable claim(s) in the JPO application(s);

(4) Examination of the U.S. application has not begun;

(5) Applicant must submit a copy of all the office actions from each of the JPO application(s) containing the allowable/patentable claim(s) along with an English translation thereof and a statement that the English translation is accurate;

(6) Applicant must submit an IDS listing the documents cited by the JPO examiner in the JPO office action along with copies of documents except U.S. patents or U.S. patent application publications; and

(7) The required petition fee under 37 CFR 1.17(h).

The request to participate in the PPH pilot program and petition comply with the above requirements. Accordingly, the above-identified application has been accorded "special" status.

Telephone inquiries concerning this decision should be directed to Mano Padmanabhan at 571-272-4210.

All other inquiries concerning the examination or status of the application is accessible in the PAIR system at http://www.uspto.gov/ebc/index.html.

The application is being forwarded to the examiner for action on the merits commensurate with this decision.

Mano Padmanabhan

Mano Padmanabhan
Quality Assurance Specialist, Technology Center 2100, Workgroup 2180
571-272-4210

UNITED STATES PATENT AND TRADEMARK OFFICE

Commissioner for Patents
United States Patent and Trademark Office
P.O. Box 1450
Alexandria, VA 22313-1450
www.uspto.gov

THERAVANCE, INC.
901 GATEWAY BOULEVARD
SOUTH SAN FRANCISCO CA 94080

MAILED

MAR 16 2010

OFFICE OF PETITIONS

In re Application of	:	
Aggen, et al.	:	DECISION ON APPLICATION
Application No.11/141,398	:	FOR
Filed: June 1, 2005	:	PATENT ERM ADJUSTMENT
Atty Docket No.		
P-030-US2		

This is a decision on the "REQUEST FOR RECONSIDERATION OF PATENT TERM ADJUSTMENT UNDER UNDER 37 CFR 1.705(d)," filed December 19, 2008. Applicants request that the patent term adjustment of five hundred sixty seven (567) days be adjusted to a determination of seven hundred and nine (709) days.

The request for reconsideration of patent term adjustment is **GRANTED**.

On October 21, 2008, the above-identified application matured into US Patent No. 7,456,203 with a patent term adjustment of 567 days. This request for reconsideration of patent term adjustment was timely filed within two months of the issue date of the patent. See 37 CFR 1.705(d).

The Office acknowledges submission of the $200.00 fee set forth in 37 CFR 1.18(e), paid on December 19, 2008. No additional fees are required.

Patentees request recalculation of the patent term adjustment based on the decision in Wyeth v. Dudas, 580 F. Supp. 2d 138, 88 U.S.P.Q. 2d 1538 (D.D.C. 2008). Patentees assert that in view of the decision in Wyeth, they are entitled to a total patent term adjustment of 709 days, which includes 142 days due to exceeding three year pendency.

In view of the Federal Circuit decision Wyeth v. Kappos, No. 2009-1120 (Fed. Cir., Jan. 7, 2010) the relief requested is granted.

Telephone inquiries specific to this decision should be directed to Maria Nuzzolillo, Legal Advisor, at (571) 272-8150, or the undersigned at 571-272-7757.

/Kery A. Fries/

Kery A. Fries
Senior Legal Advisor
Office of Patent Legal Administration
Office of Deputy Commissioner
for Examination Policy

UNITED STATES PATENT AND TRADEMARK OFFICE

CERTIFICATE OF CORRECTION

PATENT : 7,411,152 B2

DATED : October 21, 2008 **Draft**

INVENTOR(S) : Kato

It is certified that error appears in the above-identified patent and that said Letters Patent is hereby corrected as shown below:

On the cover page,

[*] Notice: Subject to any disclaimer, the term of this patent is extended or adjusted under 35 USC 154(b) by (567) days

Delete the phrase "by 567 days" and insert – by 709 days--

Day : Monday
Date: 3/15/2010

PALM INTRANET

Time: 14:35:18

PTA Calculations for Application: 11/141398			
Application Filing Date:	06/01/2005	PTO Delay (PTO):	567
Issue Date of Patent:	10/21/2008	Three Years:	0
Pre-Issue Petitions:	0	Applicant Delay (APPL):	0
Post-Issue Petitions:	0	Total PTA (days):	709
PTO Delay Adjustment:	142		

File Contents History

Number	Date	Contents Description	PTO	APPL	START
39	03/15/2010	ADJUSTMENT OF PTA CALCULATION BY PTO	142		
35.5	10/01/2008	PTA 36 MONTHS			
35	10/21/2008	PATENT ISSUE DATE USED IN PTA CALCULATION			
34	09/22/2008	EXPORT TO FINAL DATA CAPTURE			
33	09/19/2008	DISPATCH TO FDC			
32	09/19/2008	APPLICATION IS CONSIDERED READY FOR ISSUE			
31	09/16/2008	ISSUE FEE PAYMENT VERIFIED			
30	09/16/2008	ISSUE FEE PAYMENT RECEIVED			
29	07/09/2008	FINISHED INITIAL DATA CAPTURE			
28	06/23/2008	EXPORT TO INITIAL DATA CAPTURE			
27	06/19/2008	MAIL NOTICE OF ALLOWANCE			
26	06/18/2008	ISSUE REVISION COMPLETED			
25	06/18/2008	DOCUMENT VERIFICATION			
24	06/18/2008	NOTICE OF ALLOWANCE DATA VERIFICATION COMPLETED			
23	06/09/2008	NOTICE OF ALLOWABILITY			
22	06/04/2008	DATE FORWARDED TO EXAMINER			
21	04/24/2008	RESPONSE AFTER NON-FINAL ACTION			
20	02/19/2008	MAIL NON-FINAL REJECTION	567		-1
19	02/15/2008	NON-FINAL REJECTION			
16	06/01/2005	INFORMATION DISCLOSURE STATEMENT CONSIDERED			
15	12/18/2007	CASE DOCKETED TO EXAMINER IN GAU			
14	10/17/2007	WITHDRAW FLAGGED FOR 5/25			
13	10/15/2007	FLAGGED FOR 5/25			

12	08/30/2007	CASE DOCKETED TO EXAMINER IN GAU			
11	07/01/2007	TRANSFER INQUIRY TO GAU			
10	07/19/2006	IFW TSS PROCESSING BY TECH CENTER COMPLETE			
9	07/19/2006	CASE DOCKETED TO EXAMINER IN GAU			
8	06/01/2005	REQUEST FOR FOREIGN PRIORITY (PRIORITY PAPERS MAY BE INCLUDED)			
7.7	06/01/2005	INFORMATION DISCLOSURE STATEMENT (IDS) FILED			
7	06/01/2005	INFORMATION DISCLOSURE STATEMENT (IDS) FILED			
6	01/24/2006	CASE CLASSIFIED BY OIPE			
5	07/05/2005	APPLICATION DISPATCHED FROM OIPE			
4	07/05/2005	APPLICATION IS NOW COMPLETE			
3	06/17/2005	CLEARED BY OIPE CSR			
2	06/14/2005	IFW SCAN & PACR AUTO SECURITY REVIEW			
1	06/01/2005	INITIAL EXAM TEAM NN			

Search Another: Application# Search

EXPLANATION OF PTA CALCULATION

EXPLANATION OF PTE CALCULATION

To go back, right click here and select Back. To go forward, right click here and select Forward. To refresh, right click here and select Refresh.

Back to OASIS | Home page

UNITED STATES PATENT AND TRADEMARK OFFICE

COMMISSIONER FOR PATENTS
UNITED STATES PATENT AND TRADEMARK OFFICE
P.O. BOX 1450
ALEXANDRIA, VA 22313-1450
www.uspto.gov

ROBERTS MARDULA & WARTHEIM, LLC
11800 SUNRISE VALLEY DRIVE
SUITE 1000
RESTON, VA 20191

COPY MAILED

SEP 28 2006

OFFICE OF PETITIONS

In re Application of	:
Mower	:
Application No. 11/141,403	: DECISION ON PETITION
Filed: May 31, 2005	: UNDER 37 CFR 1.78(a)(3)
Attorney Docket No. 2206-013	:

This is a decision on the petition under 37 CFR 1.78(a)(3), filed January 27, 2006, to accept an unintentionally delayed claim under 35 U.S.C. § 120 for the benefit of priority to the prior-filed nonprovisional applications set forth in the amendment filed with the petition.

The petition is **GRANTED**.

A petition for acceptance of a claim for late priority under 37 CFR 1.78(a)(3) is only applicable to those applications filed on or after November 29, 2000. Further, the petition is appropriate only after the expiration of the period specified in 37 CFR 1.78(a)(2)(ii). In addition, the petition under 37 CFR 1.78(a)(3) must be accompanied by:

(1) the reference required by 35 U.S.C. § 120 and 37 CFR 1.78(a)(2)(i) of the prior-filed application, unless previously submitted;
(2) the surcharge set forth in § 1.17(t); and
(3) a statement that the entire delay between the date the claim was due under 37 CFR 1.78(a)(2)(ii) and the date the claim was filed was unintentional. The Director may require additional information where there is a question whether the delay was unintentional.

The provisions of 37 CFR 1.78(a)(3)(iii) require a statement that the entire delay in filing the required reply from the due date for the reply until the filing of a grantable petition pursuant to 37 CFR 1.78(a)(3) was unintentional. Since the statement contained in the instant petition varies from the language required by 37 CFR 1.78(a)(3)(iii), the statement is being construed as the statement required by 37 CFR 1.78(a)(3)(iii) and petitioner must notify the Office if this is **not** a correct interpretation of the statement contained in the instant petition.

All the above requirements having been satisfied, the late claim for priority under 35 U.S.C. § 120 is accepted as being unintentionally delayed.

The granting of the petition to accept the delayed benefit claim to the prior-filed applications under 37 CFR 1.78(a)(3) should not be construed as meaning that this application is entitled to the benefit of the prior-filed applications. In order for this application to be entitled to the benefit of the prior-filed applications, all other requirements under 35 U.S.C. § 120 and 37 CFR 1.78(a)(1) and (a)(2) must be met. Similarly, the fact that the corrected Filing Receipt accompanying this decision on petition includes the prior-filed applications should not be construed as meaning that applicant is entitled to the claim for benefit of priority to the prior-filed applications noted thereon. Accordingly, the examiner will, in due course, consider this benefit claim and determine whether the application is entitled to the benefit of the earlier filing date.

The rule at 37 CFR 1.78(a)(3) requires a statement that the entire delay between the date the claim was due under 37 CFR 1.78(a)(2)(ii) and the date the claim was filed as unintentional. Since the statement appearing in the petition varies from the required language, the statement is being construed as the statement required by 37 CFR 1.78(a)(3). If this is not a correct reading of the statement appearing in the petition, petitioner should promptly notify the Office.

A corrected Filing Receipt, which includes the priority claim to the prior-filed nonprovisional applications, accompanies this decision on petition.

Any inquiries concerning this decision may be directed to Petitions Attorney Alesia M. Brown at (571) 272-3205. All other inquiries concerning either the examination procedures or status of the application should be directed to the Technology Center.

This application is being forwarded to Technology Center Art Unit 3762 for appropriate action on the amendment filed January 27, 2006, including consideration by the examiner of applicant's entitlement to claim benefit of priority under 35 U.S.C. § 120 to the prior-filed applications.

Frances Hicks
Lead Petitions Examiner
Office of Petitions

ATTACHMENT: Corrected Filing Receipt

UNITED STATES PATENT AND TRADEMARK OFFICE

UNITED STATES DEPARTMENT OF COMMERCE
United States Patent and Trademark Office
Address: COMMISSIONER FOR PATENTS
P.O. Box 1450
Alexandria, Virginia 22313-1450
www.uspto.gov

APPL NO.	FILING OR 371 (c) DATE	ART UNIT	FIL FEE REC'D	ATTY.DOCKET NO	DRAWINGS	TOT CLMS	IND CLMS
11/141,403	05/31/2005	3762	865	2206-013	3	28	4

CONFIRMATION NO. 4674

CORRECTED FILING RECEIPT

OC000000019886985

22208
ROBERTS MARDULA & WARTHEIM, LLC
11800 SUNRISE VALLEY DRIVE
SUITE 1000
RESTON, VA 20191

Date Mailed: 08/03/2006

Receipt is acknowledged of this regular Patent Application. It will be considered in its order and you will be notified as to the results of the examination. Be sure to provide the U.S. APPLICATION NUMBER, FILING DATE, NAME OF APPLICANT, and TITLE OF INVENTION when inquiring about this application. Fees transmitted by check or draft are subject to collection. Please verify the accuracy of the data presented on this receipt. **If an error is noted on this Filing Receipt, please mail to the Commissioner for Patents P.O. Box 1450 Alexandria Va 22313-1450. Please provide a copy of this Filing Receipt with the changes noted thereon. If you received a "Notice to File Missing Parts" for this application, please submit any corrections to this Filing Receipt with your reply to the Notice. When the USPTO processes the reply to the Notice, the USPTO will generate another Filing Receipt incorporating the requested corrections (if appropriate).**

Applicant(s)

Morton M. Mower, Baltimore, MD;

Power of Attorney:

John Abokhair--30537
Jon Roberts--31293
Christopher Kilner--45381
Nahied Usman--47148
Elliott Light--51948

Domestic Priority data as claimed by applicant

This appln claims benefit of 60/575,121 05/28/2004
and is a CIP of 10/053,750 01/21/2002
which is a CON of 09/690,947 10/18/2000 PAT 6,341,235
which is a CIP of 09/008,636 01/16/1998 PAT 6,136,019
which is a CIP of 08/699,552 08/19/1996 PAT 5,871,506
This application 11/141,403
is a CIP of 10/754,887 01/10/2004
which is a CIP of 09/929,478 08/14/2001 PAT 6,895,274
which is a CON of 09/231,570 01/14/1999 PAT 6,295,470
which is a CIP of 08/699,552 08/19/1996 PAT 5,871,506
This application 11/141,403
is a CIP of 10/754,887 01/10/2004
which is a CIP of 09/929,478 08/14/2001 PAT 6,895,274
which is a CON of 09/231,570 01/14/1999 PAT 6,295,470
which is a CIP of 08/699,552 08/19/1996 PAT 5,871,506
and said 10/754,887 01/10/2004

is a CIP of 10/053,750 01/21/2002
which is a CON of 09/690,947 10/18/2000 PAT 6,341,235
which is a CIP of 09/008,636 01/16/1998 PAT 6,136,019
which is a CIP of 08/699,552 08/19/1996 PAT 5,871,506
and said 10/754,887 01/10/2004
claims benefit of 60/439,206 01/10/2003

Foreign Applications

If Required, Foreign Filing License Granted: 06/29/2005

The country code and number of your priority application, to be used for filing abroad under the Paris Convention, is US11/141,403

Projected Publication Date: Not Applicable

Non-Publication Request: No

Early Publication Request: No

**** SMALL ENTITY ****

Title

System and method for managing detrimental cardiac remodeling

Preliminary Class

607

PROTECTING YOUR INVENTION OUTSIDE THE UNITED STATES

Since the rights granted by a U.S. patent extend only throughout the territory of the United States and have no effect in a foreign country, an inventor who wishes patent protection in another country must apply for a patent in a specific country or in regional patent offices. Applicants may wish to consider the filing of an international application under the Patent Cooperation Treaty (PCT). An international (PCT) application generally has the same effect as a regular national patent application in each PCT-member country. The PCT process **simplifies** the filing of patent applications on the same invention in member countries, but **does not result** in a grant of "an international patent" and does not eliminate the need of applicants to file additional documents and fees in countries where patent protection is desired.

Almost every country has its own patent law, and a person desiring a patent in a particular country must make an application for patent in that country in accordance with its particular laws. Since the laws of many countries differ in various respects from the patent law of the United States, applicants are advised to seek guidance from specific foreign countries to ensure that patent rights are not lost prematurely.

Applicants also are advised that in the case of inventions made in the United States, the Director of the USPTO must issue a license before applicants can apply for a patent in a foreign country. The filing of a U.S. patent application serves as a request for a foreign filing license. The application's filing receipt contains further information and guidance as to the status of applicant's license for foreign filing.

Applicants may wish to consult the USPTO booklet, "General Information Concerning Patents" (specifically, the section entitled "Treaties and Foreign Patents") for more information on timeframes and deadlines for filing foreign patent applications. The guide is available either by contacting the USPTO Contact Center at 800-786-9199, or it can be viewed on the USPTO website at http://www.uspto.gov/web/offices/pac/doc/general/index.html.

For information on preventing theft of your intellectual property (patents, trademarks and copyrights), you may

wish to consult the U.S. Government website, http://www.stopfakes.gov. Part of a Department of Commerce initiative, this website includes self-help "toolkits" giving innovators guidance on how to protect intellectual property in specific countries such as China, Korea and Mexico. For questions regarding patent enforcement issues, applicants may call the U.S. Government hotline at 1-866-999-HALT (1-866-999-4158).

LICENSE FOR FOREIGN FILING UNDER
Title 35, United States Code, Section 184
Title 37, Code of Federal Regulations, 5.11 & 5.15

GRANTED

The applicant has been granted a license under 35 U.S.C. 184, if the phrase "IF REQUIRED, FOREIGN FILING LICENSE GRANTED" followed by a date appears on this form. Such licenses are issued in all applications where the conditions for issuance of a license have been met, regardless of whether or not a license may be required as set forth in 37 CFR 5.15. The scope and limitations of this license are set forth in 37 CFR 5.15(a) unless an earlier license has been issued under 37 CFR 5.15(b). The license is subject to revocation upon written notification. The date indicated is the effective date of the license, unless an earlier license of similar scope has been granted under 37 CFR 5.13 or 5.14.

This license is to be retained by the licensee and may be used at any time on or after the effective date thereof unless it is revoked. This license is automatically transferred to any related applications(s) filed under 37 CFR 1.53(d). This license is not retroactive.

The grant of a license does not in any way lessen the responsibility of a licensee for the security of the subject matter as imposed by any Government contract or the provisions of existing laws relating to espionage and the national security or the export of technical data. Licensees should apprise themselves of current regulations especially with respect to certain countries, of other agencies, particularly the Office of Defense Trade Controls, Department of State (with respect to Arms, Munitions and Implements of War (22 CFR 121-128)); the Bureau of Industry and Security, Department of Commerce (15 CFR parts 730-774); the Office of Foreign Assets Control, Department of Treasury (31 CFR Parts 500+) and the Department of Energy.

NOT GRANTED

No license under 35 U.S.C. 184 has been granted at this time, if the phrase "IF REQUIRED, FOREIGN FILING LICENSE GRANTED" DOES NOT appear on this form. Applicant may still petition for a license under 37 CFR 5.12, if a license is desired before the expiration of 6 months from the filing date of the application. If 6 months has lapsed from the filing date of this application and the licensee has not received any indication of a secrecy order under 35 U.S.C. 181, the licensee may foreign file the application pursuant to 37 CFR 5.15(b).

UNITED STATES PATENT AND TRADEMARK OFFICE

COMMISSIONER FOR PATENTS
UNITED STATES PATENT AND TRADEMARK OFFICE
P.O. BOX 1450
ALEXANDRIA, VA 22313-1450
www.uspto.gov

LADAS & PARRY LLP
224 SOUTH MICHIGAN AVENUE
SUITE 1600
CHICAGO, IL 60604

COPY MAILED

FEB 13 2007

OFFICE OF PETITIONS

In re Application of	:	
YAMANO et al	:	
Application No.: 11/141,421	:	DECISION ON PETITION
Filing Date: May 31, 2005	:	UNDER 37 CFR 1.137(B)
Attorney Docket No.: CU-4234 RJS	:	

This is a decision on the petition under 37 CFR 1.137(b), filed October 12, 2006, to revive the above-identified application.

The petition is **GRANTED.**

The above-identified application became abandoned for failure to reply in a timely manner to the final Office action mailed March 31, 2006. Accordingly, by operation of law, the above-identified application became abandoned on July 1, 2006.

The petition satisfies the conditions for revival pursuant to the provisions of 37 CFR 1.137(b) in that (1) the reply in the form of a Request for Continued Examination (RCE); (2) the petition fee; and (3) the required statement of unintentional delay have been received. Accordingly, the reply to the final Office action mailed March 31, 2006 is accepted as having been unintentionally delayed.

Applicant is advised that an extension of time under 37 CFR 1.137 must be filed prior to the expiration of the maximum extendable period for reply. See *In re Application of S.*, 8 USPQ2d 1630, 1631 (Comm'r Pats. 1988). Accordingly, since the three-month extension of time submitted with the petition on October 12, 2006 was subsequent to the maximum extendable period for reply, petition may request a refund of this fee by writing to the Office of Finance, Refund Section. A copy of this decision should accompany petitioner's request.

This application is being referred to Technology Center AU 2812 for appropriate action on the reply in due course.

Telephone inquiries concerning this decision should be directed to the undersigned at (571) 272-3303.

Bryan Lin

Bryan Lin
Legal Examiner
Office of the Deputy Commissioner
for Patent Examination Policy

UNITED STATES PATENT AND TRADEMARK OFFICE

UNITED STATES DEPARTMENT OF COMMERCE
United States Patent and Trademark Office
Address: COMMISSIONER FOR PATENTS
P.O. Box 1450
Alexandria, Virginia 22313-1450
www.uspto.gov

Buckley, Maschoff & Talwalkar LLC/
Intel Corporation
50 Locust Avenue
New Canaan, CT 06840

Mail Date: 04/21/2010

Applicant	: Victor L. Eruhimov	: DECISION ON REQUEST FOR
Patent Number	: 7676105	: RECALCULATION of PATENT
Issue Date	: 03/09/2010	: TERM ADJUSTMENT IN VIEW
Appliction No	: 11/141,422	: OF WYETH
Filed	: 05/31/2005	:
		:

The Patentee's Request for Recalculation is **DISMISSED.**

This Request is deemed ineligible for consideration for one or more of the following reasons:

(A). The patent for which PTA recalculation is requested is either a design or reissue application or is a reexamination proceeding;

(B). The patent for which PTA recalculation is requested resulted from a utility or plant application filed under 35 USC 111(a) before May 29, 2000 and no CPA filed in the application on/after May 29, 2000;

(C). The patent for which PTA recalculation is requested resulted from an international application in which the international filing date was before May 29, 2000 and no CPA filed in the application on/after May 29, 2000;

(D). The patent for which PTA recalculation is requested issued on/after March 2, 2010;

(E). The Request for Recalculation was filed more than 180 days after the grant date of the patent and the request was not filed within two months of a dismissal of a request for reconsideration of the of the patent term under 37 CFR 1.705(d);

(F). The Request for Recalculation is not solely limited to USPTO pre-Wyeth interpretation of 35 U.S.C. 154(b)(2)(A);

or

(G). A civil action was filed pursuant to 35 U.S.C. 154(b)(4)(A)concerning the same patent at issue in this request.

Patentee may file a reply to this decision dismissing the Request for Recalculation. Patentee must file such reply within one month or thirty days, whichever is longer, of the mail date of the decision dismissing the Request for Recalculation. No fee is required if patentee is asserting in the reply that the dismissal for ineligibility is improper.

Patentee should use document code PET.OP if electronically filing a reply to this dismissal. If the USPTO finds that the request was improperly deemed ineligible, the USPTO will mail applicant a recalculation determination.

Patentee should be aware that in order to preserve the right to review in the United States District Court for the District of Columbia of the USPTO patent term adjustment determination, patentee must ensure that he or she also take the steps required under 35 U.S.C. 154(b)(4)(A). Nothing in the request for recalculation should be construed as providing an alternative time frame for commencing a civil action under 35 U.S.C. 154 (b)(4)(A).

Any questions concerning this decision should be directed to the Office of Patent Legal Administration at 571-272-7702.

UNITED STATES PATENT AND TRADEMARK OFFICE

Commissioner for Patents
United States Patent and Trademark Office
P.O. Box 1450
Alexandria, VA 22313-1450
www.uspto.gov

WOODCOCK WASHBURN, LLP
ONE LIBERTY PLACE - 46TH FLOOR
PHILADELPHIA PA 19103

COPY MAILED
NOV 07 2006
OFFICE OF PETITIONS

In re Application of	:	
Timothy W. Houtz	:	
Application No. 10/141,423	:	DECISION GRANTING PETITION
Filed: May 31, 2005	:	UNDER 37 CFR 1.313(c)(2)
Attorney Docket No. FCI-2902/C3279	:	

This is a decision on the petition under 37 CFR 1.313(c)(2), filed November 3, 2006, to withdraw the above-identified application from issue after payment of the issue fee.

The petition is **GRANTED**.

The above-identified application is withdrawn from issue for consideration of a submission under 37 CFR 1.114 (request for continued examination). *See* 37 CFR 1.313(c)(2).

Petitioner is advised that the issue fee paid on August 23, 2006 cannot be refunded. If, however, this application is again allowed, petitioner may request that it be applied towards the issue fee required by the new Notice of Allowance.[1]

Telephone inquiries regarding this decision should be directed to April Wise at (571) 272-1642.

This application is being referred to Technology Center AU 2839 for processing of the request for continued examination under 37 CFR 1.114 and for consideration of the concurrently filed information disclosure statement.

Frances Hicks

Frances M. Hicks
Petitions Examiner
Office of Petitions

[1] *The request to apply the issue fee to the new Notice may be satisfied by completing and returning the new Part B – Fee(s) Transmittal Form (along with any balance due at the time of submission). Petitioner is advised that the Issue Fee Transmittal Form* ***must*** *be completed and timely submitted to avoid abandonment of the application.*

Copied from 10141423 on 11/30/2006

UNITED STATES PATENT AND TRADEMARK OFFICE

Commissioner for Patents
United States Patent and Trademark Office
P.O. Box 1450
Alexandria, VA 22313-1450
www.uspto.gov

WOODCOCK WASHBURN, LLP
ONE LIBERTY PLACE - 46TH FLOOR
PHILADELPHIA PA 19103

COPY MAILED
NOV 07 2006
OFFICE OF PETITIONS

In re Application of	:	
Timothy W. Houtz	:	
Application No. 10/141,423	:	DECISION GRANTING PETITION
Filed: May 31, 2005	:	UNDER 37 CFR 1.313(c)(2)
Attorney Docket No. FCI-2902/C3279	:	

This is a decision on the petition under 37 CFR 1.313(c)(2), filed November 3, 2006, to withdraw the above-identified application from issue after payment of the issue fee.

The petition is **GRANTED**.

The above-identified application is withdrawn from issue for consideration of a submission under 37 CFR 1.114 (request for continued examination). *See* 37 CFR 1.313(c)(2).

Petitioner is advised that the issue fee paid on August 23, 2006 cannot be refunded. If, however, this application is again allowed, petitioner may request that it be applied towards the issue fee required by the new Notice of Allowance.[1]

Telephone inquiries regarding this decision should be directed to April Wise at (571) 272-1642.

This application is being referred to Technology Center AU 2839 for processing of the request for continued examination under 37 CFR 1.114 and for consideration of the concurrently filed information disclosure statement.

Frances Hicks

Frances M. Hicks
Petitions Examiner
Office of Petitions

[1] *The request to apply the issue fee to the new Notice may be satisfied by completing and returning the new Part B – Fee(s) Transmittal Form (along with any balance due at the time of submission). Petitioner is advised that the Issue Fee Transmittal Form* ***must*** *be completed and timely submitted to avoid abandonment of the application.*

Copied from 10141423 on 11/30/2006

UNITED STATES PATENT AND TRADEMARK OFFICE

Commissioner for Patents
United States Patent and Trademark Office
P.O. Box 1450
Alexandria, VA 22313-1450
www.uspto.gov

WOODCOCK WASHBURN, LLP
ONE LIBERTY PLACE - 46TH FLOOR
PHILADELPHIA PA 19103

COPY MAILED

DEC 01 2006

OFFICE OF PETITIONS

In re Application of	:	
Timothy W. Houtz	:	CORRECTED DECISION
Application No. 11/141,423	:	DECISION GRANTING PETITION
Filed: May 31, 2005	:	UNDER 37 CFR 1.313(c)(2)
Attorney Docket No. FCI-2902/C3279	:	

This is a decision on the petition under 37 CFR 1.313(c)(2), filed November 3, 2006, to withdraw the above-identified application from issue after payment of the issue fee.

The petition is **GRANTED**.

The above-identified application is withdrawn from issue for consideration of a submission under 37 CFR 1.114 (request for continued examination). *See* 37 CFR 1.313(c)(2).

Petitioner is advised that the issue fee paid on August 23, 2006 cannot be refunded. If, however, this application is again allowed, petitioner may request that it be applied towards the issue fee required by the new Notice of Allowance.[1]

Telephone inquiries regarding this decision should be directed to April Wise at (571) 272-1642.

This application is being referred to Technology Center AU 2839 for processing of the request for continued examination under 37 CFR 1.114 and for consideration of the concurrently filed information disclosure statement.

Frances Hicks

Frances M. Hicks
Petitions Examiner
Office of Petitions

[1] *The request to apply the issue fee to the new Notice may be satisfied by completing and returning the new Part B – Fee(s) Transmittal Form (along with any balance due at the time of submission). Petitioner is advised that the Issue Fee Transmittal Form* ***must*** *be completed and timely submitted to avoid abandonment of the application.*

UNITED STATES PATENT AND TRADEMARK OFFICE

Commissioner for Patents
United States Patent and Trademark Office
P.O. Box 1450
Alexandria, VA 22313-1450
www.uspto.gov

GIFFORD, KRASS, GROH, SPRINKLE & CITKOWSKI, P.C
PO BOX 7021
TROY MI 48007-7021

COPY MAILED

DEC 28 2005

OFFICE OF PETITIONS

In re Application of	:	
Mel Bingenheimer	:	DECISION REFUSING STATUS
Application No. 11/141,435	:	UNDER 37 CFR 1.47(b)
Filed: May 31, 2005	:	
Attorney Docket No. **MAN-11102/22**	:	

This is in response to the petition under 37 CFR 1.47(b), filed December 12, 2005. Petitioner obtained an extension of time for response within the third month. Accordingly, the petition is filed timely.

Petitioner showed that Mel Bingenheimer, the non-signing inventor, constructively refused to join in the application after being mailed the application papers via certified mail. Petitioner demonstrated that Mantex Corporation ("Mantex") has a proprietary interest in the above-identified application with the copy of an assignment, showing that the inventor had an obligation to assign any patent rights to Mantex. Petitioner authorized the Office to charge the Deposit Account for any requisite fees. Additionally, petitioner indicated that such action is necessary to prevent irreparable damage. However, petitioner failed to file a proper declaration in compliance with 37 CFR 1.63 and 1.64.

Accordingly, the petition is dismissed.

Petitioner is given TWO (2) MONTHS from the mailing date of this decision to respond, correcting the below-noted deficiencies. Any response should be entitled "Request for Reconsideration of Petition Under 37 CFR 1.47(b)" and may include an oath or declaration executed by the inventor. Failure to respond will result in abandonment of the application. Any extensions of time will be governed by 37 CFR 1.136(a).

A grantable petition under 37 CFR 1.47(b) requires: (1) proof that the non-signing inventor cannot be reached or refuses to sign the oath or declaration; (2) an acceptable oath or declaration; (3) the petition fee; (4) a statement of the last known address of the non-signing inventor; (5) proof of proprietary interest; and (6) proof of irreparable damage. Petitioner lacks item (2) as set forth above.

As to item (2), petitioner did not submit an acceptable declaration with the present petition.

The Office notes that:

> The 37 CFR 1.47(b) applicant must make the oath required by 37 CFR 1.63 and 1.64 or 1.175. Where a corporation is the 37 CFR 1.47(b) applicant, an officer (President, Vice-President, Secretary, Treasurer, or Chief Executive Officer) thereof should normally sign the necessary oath or declaration. A corporation may authorize any person, including an attorney or agent registered to practice before the U.S. Patent and Trademark Office, to sign the application oath or declaration on its behalf. Where an oath or declaration is signed by a registered attorney or agent on behalf of a corporation, either proof of the attorney's or agent's authority in the form of a statement signed by an appropriate corporate officer must be submitted, or the attorney or agent may simply state that he or she is authorized to sign on behalf of the corporation. Where the oath or declaration is being signed on behalf of an assignee, see MPEP Section 324. An inventor may not authorize another individual to act as his or her agent to sign the application oath or declaration on his or her behalf. *Staeger v. Commissioner*, 189 USPQ 272 (D.D.C. 1976), *In re Striker*, 182 USPQ 507 (Comm'r Pat. 1973). Where an application is executed by one other than the inventor, the declaration required by 37 CFR 1.63 must state the full name, residence, post office address, and citizenship of the nonsigning inventor. Also, the title or position of the person signing must be stated if signing on behalf of a corporation under 37 CFR 1.47(b).

Accordingly, to correct the deficiency, petitioner must submit a declaration setting forth the full name, residence, post office address, and citizenship of Mel Bingenheimer. Additionally, the declaration must be signed on behalf of the nonsigning inventor in compliance with 37 CFR 1.63 and 1.64 as indicated above.

The $200.00 petition fee will be charged to petitioner's Deposit Account, as authorized.

Further correspondence with respect to this matter should be addressed as follows and **directed to the attention of Senior Petitions Attorney Christina Tartera Donnell**:

By mail: Mail Stop Petition
Commissioner for Patents
P.O. Box 1450
Alexandria, VA 22313-1450

By FAX: (571) 273-8300
Attn: Office of Petitions

By hand: Customer Service Window
Randolph Building
401 Dulany Street
Alexandria, VA 22314

Telephone inquiries related to this decision should be directed to the undersigned at (571) 272-3211.

Christina T. Donnell

Christina Tartera Donnell
Senior Petitions Attorney
Office of Petitions

UNITED STATES PATENT AND TRADEMARK OFFICE

Commissioner for Patents
United States Patent and Trademark Office
P.O. Box 1450
Alexandria, VA 22313-1450
www.uspto.gov

GIFFORD, KRASS, GROH, SPRINKLE & CITKOWSKI, P.C
PO BOX 7021
TROY MI 48007-7021

COPY MAILED

FEB 07 2006

OFFICE OF PETITIONS

In re Application of	:	
Mel Bingenheimer	:	DECISION ACCORDING STATUS
Application No. 11/141,435	:	UNDER 37 CFR 1.47(b)
Filed: May 31, 2005	:	
Attorney Docket No. MAN-11102/22	:	

This is in response to the renewed petition under 37 CFR 1.47(b), filed January 26, 2005.

Petitioner showed that Mel Bingenheimer, the non-signing inventor, constructively refused to join in the application after being mailed the application papers via certified mail. Petitioner demonstrated that Mantex Corporation ("Mantex") has a proprietary interest in the above-identified application with the copy of an assignment, showing that the inventor had an obligation to assign any patent rights to Mantex. Petitioner authorized the Office to charge the Deposit Account for any requisite fees. Additionally, petitioner indicated that such action is necessary to prevent irreparable damage. Lastly, petitioner filed a proper declaration in compliance with 37 CFR 1.63 and 1.64.

Accordingly, the petition is granted.

This application and papers have been reviewed and found in compliance with 37 CFR 1.47(b). This application is hereby accorded Rule 1.47(b) status. As provided in Rule 1.47(c), this Office will forward notice of this application's filing to the non-signing inventor at the address given in the petition. Notice of the filing of this application will also be published in the Official Gazette.

This matter is being referred to the Office of Initial Patent Examination for further processing.

Telephone inquiries related to this decision should be directed to the undersigned at (571) 272-3211.

Christina Tartera

Christina Tartera Donnell
Senior Petitions Attorney
Office of Petitions

UNITED STATES PATENT AND TRADEMARK OFFICE

Commissioner for Patents
United States Patent and Trademark Office
P.O. Box 1450
Alexandria, VA 22313-1450
www.uspto.gov

Mr. Mel Bingenheimer
3334 W. Main Street
Norman, Oklahoma 73072

COPY MAILED

FEB 07 2006

OFFICE OF PETITIONS

In re Application of	:	
Mel Bingenheimer	:	LETTER
Application No. 11/141,435	:	
Filed: May 31, 2005	:	
Attorney Docket No. MAN-11102/22	:	

Dear Mr. Bingenheimer:

You are named as the sole inventor in the above-identified United States patent application filed under the provisions of 35 U.S.C. 116 (United States Code) and 37 CFR 1.47(b), Rules of Practice in Patent Cases. Should a patent be granted on the application you will be designated therein as a sole inventor.

As a named inventor you are entitled to inspect any paper in the file wrapper of the application, order copies of all or any part thereof (at a prepaid cost per 37 CFR 1.19) or make your position of record in the application. Alternatively, you may arrange to do any of the preceding through a registered patent attorney or agent presenting written authorization from you. If you care to join the application, counsel of record (see below) would presumably assist you. Joining in the application would entail the filing of an appropriate oath or declaration by you pursuant to 37 CFR 1.63.

Requests for information regarding your application should be directed to the File Information Unit at (703) 308-2733. Information regarding how to pay for and order a copy of the application, or a specific paper in the application should be directed to Certification Division at (703) 308-9726 or 1-800-972-6382 (outside the Washington D.C. area).

C. T. Donnell

Christina Tartera Donnell
Senior Petitions Attorney
Office of Petitions

GIFFORD, KRASS, GROH, SPRINKLE & CITKOWSKI, P.C
PO BOX 7021
TROY MI 48007-7021

UNITED STATES PATENT AND TRADEMARK OFFICE

Commissioner for Patents
United States Patent and Trademark Office
P.O. Box 1450
Alexandria, VA 22313-1450
www.uspto.gov

Advanced Bionics, LLC
25129 Rye Canyon Loop
Valencia, CA 91355

COPY MAILED

JUL 03 2008

OFFICE OF PETITIONS

In re Application of	:	
Todd K. Whitehurst, et al.	:	
Application No. 11/141,443	:	DECISION ON PETITION
Filed: May 31, 2005	:	TO WITHDRAW
Attorney Docket No. AB-173U1A	:	FROM RECORD
	:	

This is a decision on the Request to Withdraw as attorney or agent of record under 37 C.F.R. § 1.36(b), filed February 14, 2008.

The request is **NOT APPROVED**.

A grantable request to withdraw as attorney/agent of record must be signed by every attorney/agent seeking to withdraw or contain a clear indication that one attorney is signing on behalf of another/others. A request to withdraw will not be approved unless at least 30 (thirty) days would remain between the date of approval and the later of the expiration date of a time to file a response or the expiration date of the maximum time period which can be extended under 37 C.F.R. § 1.136(a).

The Office cannot approve the request at this time since the reasons provided do not meet any of the conditions under the mandatory or permissive categories enumerated in 37 CFR 10.40. Section 10.40 of Title 37 of the Code of Federal Regulation states, "[a] practitioner shall not withdraw from employment in a proceeding before the Office without permission from the Office[.]" More specifically, 37 CFR 10.40 states, "[i]f paragraph (b) of this section is not applicable, a practitioner may not request permission to withdraw in matter pending before the Office unless such request or such withdrawal is" for one the permissive reasons listed in 37 CFR 10.40(c). The reasons set forth in the request, ***ownership transfer***, do not meet any the conditions set forth in 37 CFR 10.40.

All future communications from the Office will continue to be directed to the above-listed address until otherwise notified by applicant.

Telephone inquiries concerning this decision should be directed to Terri Williams at 571-272- 2991.

Terri Williams
Petitions Examiner
Office of Petitions

cc: **Todd K. Whitehurst**
28602 North Natalie Lane
Santa Clarita, CA 91390

UNITED STATES PATENT AND TRADEMARK OFFICE

Commissioner for Patents
United States Patent and Trademark Office
P.O. Box 1450
Alexandria, VA 22313-1450
www.uspto.gov

RYAN KROMHOLZ & MANION, S.C.
POST OFFICE BOX 26618
MILWAUKEE WI 53226

COPY MAILED
SEP 2 6 2008

In re Application of	:	
Warren M. GRILL et al.	:	
Application No. 11/141,457	:	DECISION ON PETITION
Filed: May 31, 2005	:	
Attorney Docket No. 9469.17421-PROV FOR DIV	:	

This is a decision on the petition under the unintentional provisions of 37 CFR 1.137(b), filed March 7, 2008, to revive the above-identified application.

The petition is **DISMISSED**.

Any request for reconsideration of this decision must be submitted within TWO (2) MONTHS from the mail date of this decision. Extensions of time under 37 CFR 1.136(a) are permitted. The reconsideration request should include a cover letter entitled "Renewed Petition under 37 CFR 1.137(b)." This is **not** a final agency action within the meaning of 5 U.S.C. § 704.

The application became abandoned for failure to timely reply within the meaning of 37 CFR 1.113 to the final Office action, mailed April 10, 2007, which set a shortened statutory period for reply of three (3) months. No extensions of time under the provisions of 37 CFR 1. 136(a) were obtained. Accordingly, the above identified application became abandoned on July 11, 2007.

A grantable petition under 37 CFR 1.137(b) must be accompanied by: (1) the required reply, unless previously filed; (2) the petition fee as set forth in 37 CFR 1.17(m); (3) a statement that the entire delay in filing the required reply from the due date for the reply until the filing of a grantable petition pursuant to 37 CFR 1.137(b) was unintentional; and (4) any terminal disclaimer (and fee as set forth in 37 CFR 1.20(d)) required by 37 CFR 1.137(d). Where there is a question as to whether either the abandonment or the delay in filing a petition under 37 CFR

1.137 was unintentional, the Director may require additional information. See MPEP 711.03(c)(II)(C) and (D). The instant petition lacks item(s) (1).

The proposed reply required for consideration of a petition to revive must be a Notice of Appeal (and appeal fee required by 37 CFR 41.20(b)(2), an amendment that prima facie places the application in condition for allowance, a Request for Continued Examination and submission (37 CFR 1.114), or the filing of a continuing application under 37 CFR 1.53(b). See MPEP 711.03(c)(III)(A)(2).

In this regard, petitioner's attention is directed to 37 CFR 1.321(b), which states:

(b) An applicant or assignee may disclaim or dedicate to the public the entire term, or any terminal part of the term, of a patent to be granted. Such terminal disclaimer is binding upon the grantee and its successors or assigns. The terminal disclaimer, to be recorded in the Patent and Trademark Office, must:
(1) Be signed:
(i) By the applicant, or
(ii) If there is an assignee of record of an undivided part interest, by the applicant and such assignee, or
(iii) If there is an assignee of record of the entire interest, by such assignee, or
(iv) By an attorney or agent of record;

and 37 CFR 1.32(b), which states:

(b) A power of attorney must:
(1) Be in writing;
(2) Name one or more representatives in compliance with (c) of this section;
(3) Give the representative power to act on behalf of the principal; and
(4) Be signed by the applicant for patent (§ 1.41(b)) or the assignee of the entire interest of the applicant.

An unsigned amendment (or other paper) or one not properly signed by a person having authority to prosecute the application is not entered. This applies, for instance, where the amendment (or other paper) is signed by only one of two applicants and the one signing has not been given a power of attorney by the other applicant.

Therefore, as the "Request to Update Power of Attorney" filed March 7, 2008, i.e. an altered copy of the 2002 Oath, does not constitute a proper power of attorney in compliance with 37 CFR 1.32(b), the record herein fails to disclose that Mr. Thomas J. Krumenacher was ever given a power of attorney and as the terminal disclaimer of the reply filed March 7, 2008 is not signed by all the inventors and the record herein fails to disclose that Mr. Thomas J. Krumenacher was ever given a power of attorney to act on behalf of inventor or that he is an assignee of the entire interest and has complied with the provisions of 37 CFR 3.73(b), the petition does not contain a proper terminal disclaimer.

Since the reply also did provide a Notice of Appeal (and appeal fee), RCE, or the filing of a continuing application under 37 CFR 1.53(b), the petition is considered to not contain a proper reply.

Further correspondence with respect to this matter should be addressed as follows:

By Mail: Mail Stop PETITION
Commissioner for Patents
P. O. Box 1450
Alexandria, VA 22313-1450

By hand: U. S. Patent and Trademark Office
Customer Service Window, Mail Stop Petitions
Randolph Building
401 Dulany Street
Alexandria, VA 22314

The centralized facsimile number is (571) 273-8300.

Telephone inquiries concerning this decision should be directed to Karin Reichle at (571) 272-6051.

David Bucci
Petitions Examiner
Office of Petitions

UNITED STATES PATENT AND TRADEMARK OFFICE

Commissioner for Patents
United States Patent and Trademark Office
P.O. Box 1450
Alexandria, VA 22313-1450
www.uspto.gov

KRAGULJAC & KALNAY
4700 ROCKSIDE ROAD
SUMMIT ONE, SUITE 510
INDEPENDENCE OH 44131

MAILED

JUN 30 2009

OFFICE OF PETITIONS

In re Application of :
Warren M. Grill et al. :
Application No. 11/141,457 : ON PETITION
Filed: May 31, 2005 :
Attorney Docket No. 9469.17421-PROV FOR DIV :

This is a decision on the renewed petition under 37 CFR 1.137(b), filed November 14, 2008, to revive the above-identified application.

The petition is **GRANTED**.

The above-identified application became abandoned for failure to reply within the meaning of 37 CFR 1.113 in a timely manner to the final Office action mailed April 10, 2007, which set a shortened statutory period for reply of three (3) months. No extensions of time under the provisions of 37 CFR 1.136(a) were obtained. Accordingly, the above-identified application became abandoned on July 11, 2007.

The petition satisfies the conditions for revival pursuant to the provisions of 37 CFR 1.137(b) in that (1) the reply in the form of a terminal disclaimer; (2) the petition fee of $770; and (3) the required statement of unintentional delay have been received. Accordingly, the reply to the final Office Action of April 10, 2007 is accepted as having been unintentionally delayed.

Telephone inquiries concerning this decision should be directed to Ron Abelson at (571) 272-3165 or in his absence, the undersigned at (571) 272-7099.

The application file is being referred to Technology Center AU 3766 for appropriate action on the concurrently filed amendment.

David Bucci
Petitions Examiner
Office of Petitions

SPE RESPONSE FOR CERTIFICATE OF CORRECTION

Paper No.: _____

DATE : 1/29/10

TO SPE OF : ART UNIT 3766 LAYNO CARL (SPE)

SUBJECT : Request for Certificate of Correction for Appl. No.: 11/141457 Patent No.: 7623925

Please respond to this request for a certificate of correction within 7 days.

FOR IFW FILES:

Please review the requested changes/corrections as shown in the **COCIN** document(s) in the IFW application image. No new matter should be introduced, nor should the scope or meaning of the claims be changed.

Please complete the response (see below) and forward the completed response to scanning using document code **COCX**.

FOR PAPER FILES:

Please review the requested changes/corrections as shown in the attached certificate of correction. Please complete this form (see below) and forward it with the file to:

Certificates of Correction Branch (CofC)
Randolph Square – 9D10-A
Palm Location 7580

Certificates of Correction Branch
703-756-1571 _____

Thank You For Your Assistance

The request for issuing the above-identified correction(s) is hereby:
Note your decision on the appropriate box.

- ☒ **Approved** — All changes apply.
- ☐ **Approved in Part** — Specify below which changes **do not** apply.
- ☐ **Denied** — State the reasons for denial below.

Comments: ONLY TYPOGRAPHICAL CHANGES MADE.
PLEASE ENTER ALL CHANGES

Carl H. Layno — SPE
3766 — Art Unit

PTOL-306 (REV. 7/03)

U.S. DEPARTMENT OF COMMERCE Patent and Trademark Office
CARL H. LAYNO
SUPERVISORY PATENT EXAMINER

UNITED STATES PATENT AND TRADEMARK OFFICE

Commissioner for Patents
United States Patent and Trademark Office
P.O. Box 1450
Alexandria, VA 22313-1450
www.uspto.gov

GARLICK HARRISON & MARKISON
P.C. BOX 160727
AUSTIN, TX 78716-0727

COPY MAILED

SEP 18 2009

OFFICE OF PETITIONS

In re Application of :
Mark David Hahm et al :
Application No. 11/141,478 : DECISION ON PETITION
Filed: May 31, 2005 :
Attorney Docket No. BP4630 :

This is a decision on the petition, filed July 20, 2009, under 37 CFR 1.181 (no fee) requesting withdrawal of the holding of abandonment in the above-identified application.

The petition is **GRANTED**.

This application was held abandoned for failure to timely pay the issue and publication fees on or before June 16, 2009, as required by the Notice of Allowance and Fee(s) Due (Notice), mailed March 16, 2009.

Petitioner asserts that the Notice dated March 16, 2009 was not received.

A review of the written record indicates no irregularity in the mailing of the Notice and, in the absence of any irregularity, there is a strong presumption that the Notice was properly mailed to the practitioner at the address of record. This presumption may be overcome by a showing that the Notice was not in fact received. In this regard, the showing required to establish the failure to receive the Notice must consist of the following:

1. a statement from practitioner stating that the Notice was not received by the practitioner;
2. a statement from the practitioner attesting to the fact that a search of the file jacket and docket records indicates that the Notice was not received; and
3. a copy of the docket record where the nonreceived Notice would have been entered and docketed had it been received must be attached to and referenced in the practitioner' statement.

See MPEP § 711.03(c) under subheading "Petition to Withdraw Holding of Abandonment Based on Failure to Receive Office Action," and "Withdrawing the Holding of Abandonment When Office Actions Are Not Received," 1156 Official Gazette 53 (November 16, 1993).
The petition satisfies the above-stated requirements. Accordingly, the application was not abandoned in fact.

In view of the above, the Notice of Abandonment is hereby vacated and the holding of abandonment withdrawn.

Telephone inquiries concerning this decision should be directed to Irvin Dingle at (571) 272-3210.

This application is being referred to the Technology Center AU 2618 technical support staff for **re-mailing** the Notice of Allowability and the Notice of Allowance and Fee(s) Due of March 16, 2009. The period for paying the issue and publication fees and submitting corrected drawings will be reset to expire three (3) months from the date the Notices are re-mailed. This period is not extendable under the provisions of 37 CFR 1.136.

Irvin Dingle
Petitions Examiner
Office of Petitions

UNITED STATES PATENT AND TRADEMARK OFFICE

Commissioner for Patents
United States Patent and Trademark Office
P.O. Box 1450
Alexandria, VA 22313-1450
www.uspto.gov

APPLICATION NUMBER	FILING/RECEIPT DATE	FIRST NAMED APPLICANT	ATTORNEY DOCKET NUMBER
11/141,480	05/31/2005	Zachary Steven Smith	100111178-3

HEWLETT-PACKARD COMPANY
Intellectual Property Administration
P. O. Box 272400
Fort Collins CO 80527-2400

DATE MAILED: February 12, 2007

DECISION GRANTING PETITION UNDER 37 CFR 1.138(d)
The declaration of express abandonment is recognized

This is in response to the petition under 37 CFR 1.138(d) filed February 7, 2007, requesting for a refund of any previously paid search fee and excess claims fee in the above-identified application.

The petition is granted.

The express abandonment is recognized. Any previously paid search fee and excess claims fee are hereby refunded.

Any inquiries concerning this decision should be directed to the Pre-Grant Publication Division at (703) 605-4283.

Barbara J. Debnam
Pre-Grant Publication Division

UNITED STATES PATENT AND TRADEMARK OFFICE

UNITED STATES DEPARTMENT OF COMMERCE
United States Patent and Trademark Office
Address: COMMISSIONER FOR PATENTS
P.O. Box 1450
Alexandria, Virginia 22313-1450
www.uspto.gov

APPLICATION NO.	FILING DATE	FIRST NAMED INVENTOR	ATTORNEY DOCKET NO.	CONFIRMATION NO.
11/141,511	05/31/2005	Ronald S. Bruckman	200407808-1	4873

7590 04/22/2008
HEWLETT PACKARD COMPANY
P O BOX 272400, 3404 E. HARMONY ROAD
INTELLECTUAL PROPERTY ADMINISTRATION
FORT COLLINS, CO 80527-2400

EXAMINER
TSANG, FAN S

ART UNIT	PAPER NUMBER
2614	

NOTIFICATION DATE	DELIVERY MODE
04/22/2008	ELECTRONIC

DECISION GRANTING PETITION UNDER 37 CFR 1.138(d)

The declaration of express abandonment is recognized

This is in response to the petition under 37 CFR 1.138(d), requesting for a refund of any previously paid search fee and excess claims fee in the above-identified application.

The petition is granted.

The express abandonment is recognized. Any previously paid search fee and excess claims fee are hereby refunded.

Telephone inquiries should be directed to the Office of Data Management at (571) 272-4200.

Patent Publication Branch
Office of Data Management

Adjustment date: 04/21/2008 DTERRY
06/03/2005 HMARZI1 00000062 082025 11141511
02 FC:1111 500.00 CR
04 FC:1201 400.00 CR
05 FC:1202 200.00 CR

FORM PET651G (Rev. 08/07)

UNITED STATES PATENT AND TRADEMARK OFFICE

UNITED STATES DEPARTMENT OF COMMERCE
United States Patent and Trademark Office
Address: COMMISSIONER FOR PATENTS
P.O. Box 1450
Alexandria, Virginia 22313-1450
www.uspto.gov

APPLICATION NO.	FILING DATE	FIRST NAMED INVENTOR	ATTORNEY DOCKET NO.	CONFIRMATION NO.
11/141,511	05/31/2005	Ronald S. Bruckman	200407808-1	4873

22879 7590 04/22/2008
HEWLETT PACKARD COMPANY
P O BOX 272400, 3404 E. HARMONY ROAD
INTELLECTUAL PROPERTY ADMINISTRATION
FORT COLLINS, CO 80527-2400

EXAMINER
TSANG, FAN S

ART UNIT	PAPER NUMBER
2614	

NOTIFICATION DATE	DELIVERY MODE
04/22/2008	ELECTRONIC

Please find below and/or attached an Office communication concerning this application or proceeding.

The time period for reply, if any, is set in the attached communication.

Notice of the Office communication was sent electronically on above-indicated "Notification Date" to the following e-mail address(es):

JERRY.SHORMA@HP.COM
mkraft@hp.com
ipa.mail@hp.com

Notice of Abandonment	Application No.	Applicant(s)	
	11/141,511	BRUCKMAN, RONALD S.	
	Examiner	Art Unit	
	KIMBERLY A. TERRELL	3651	

-- The MAILING DATE of this communication appears on the cover sheet with the correspondence address--

This application is abandoned in view of:

1. ☐ Applicant's failure to timely file a proper reply to the Office letter mailed on _____.
   (a) ☐ A reply was received on _____ (with a Certificate of Mailing or Transmission dated _____), which is after the expiration of the period for reply (including a total extension of time of _____ month(s)) which expired on _____.
   (b) ☐ A proposed reply was received on _____, but it does not constitute a proper reply under 37 CFR 1.113 (a) to the final rejection.
   (A proper reply under 37 CFR 1.113 to a final rejection consists only of: (1) a timely filed amendment which places the application in condition for allowance; (2) a timely filed Notice of Appeal (with appeal fee); or (3) a timely filed Request for Continued Examination (RCE) in compliance with 37 CFR 1.114).
   (c) ☐ A reply was received on _____ but it does not constitute a proper reply, or a bona fide attempt at a proper reply, to the non-final rejection. See 37 CFR 1.85(a) and 1.111. (See explanation in box 7 below).
   (d) ☐ No reply has been received.

2. ☐ Applicant's failure to timely pay the required issue fee and publication fee, if applicable, within the statutory period of three months from the mailing date of the Notice of Allowance (PTOL-85).
   (a) ☐ The issue fee and publication fee, if applicable, was received on _____ (with a Certificate of Mailing or Transmission dated _____), which is after the expiration of the statutory period for payment of the issue fee (and publication fee) set in the Notice of Allowance (PTOL-85).
   (b) ☐ The submitted fee of $_____ is insufficient. A balance of $_____ is due.
   The issue fee required by 37 CFR 1.18 is $_____. The publication fee, if required by 37 CFR 1.18(d), is $_____.
   (c) ☐ The issue fee and publication fee, if applicable, has not been received.

3. ☐ Applicant's failure to timely file corrected drawings as required by, and within the three-month period set in, the Notice of Allowability (PTO-37).
   (a) ☐ Proposed corrected drawings were received on _____ (with a Certificate of Mailing or Transmission dated _____), which is after the expiration of the period for reply.
   (b) ☐ No corrected drawings have been received.

4. ☒ The letter of express abandonment which is signed by the attorney or agent of record, the assignee of the entire interest, or all of the applicants.

5. ☐ The letter of express abandonment which is signed by an attorney or agent (acting in a representative capacity under 37 CFR 1.34(a)) upon the filing of a continuing application.

6. ☐ The decision by the Board of Patent Appeals and Interference rendered on _____ and because the period for seeking court review of the decision has expired and there are no allowed claims.

7. ☐ The reason(s) below:

/Kimberly Terrell/
Office of Data Management
571-272-4200

Petitions to revive under 37 CFR 1.137(a) or (b), or requests to withdraw the holding of abandonment under 37 CFR 1.181, should be promptly filed to minimize any negative effects on patent term.

UNITED STATES PATENT AND TRADEMARK OFFICE

UNITED STATES DEPARTMENT OF COMMERCE
United States Patent and Trademark Office
Address: COMMISSIONER FOR PATENTS
P.O. Box 1450
Alexandria, Virginia 22313-1450
www.uspto.gov

TEXAS INSTRUMENTS INCORPORATED
P O BOX 655474, M/S 3999
DALLAS, TX 75265

Mail Date: 07/14/2010

Applicant	: Edward Jung	: DECISION ON REQUEST FOR
Patent Number	: 7646186	: RECALCULATION of PATENT
Issue Date	: 01/12/2010	: TERM ADJUSTMENT IN VIEW
Application No	: 11/141,512	: OF WYETH AND NOTICE OF INTENT TO
Filed	: 05/31/2005	: ISSUE CERTIFICATE OF CORRECTION
		:

The Request for Recalculation is **GRANTED** to the extent indicated.

The patent term adjustment has been determined to be **0** days. The USPTO will *sua sponte* issue a certificate of correction reflecting the amount of PTA days determined by the recalculation.

Prior to the issuance of the certificate of correction, the USPTO will afford patentee an opportunity to be heard and request reconsideration. Accordingly, patentee has **one month or thirty (30) days**, whichever is longer, to file a request for reconsideration of this patent term adjustment calculation. See 35 U.S.C. 154(b)(3)(B)(ii) and 37 CFR 1.322(a)(4). No extensions of time will be granted under 37 CFR 1.136.

Patentee should use document code PET.OP if electronically filing a request for reconsideration of this patent term adjustment calculation. The patentee must also include the information required by 37 CFR 1.705(b)(2) and the fee required by 37 CFR 1.18(e). If patentee does not file a timely request for reconsideration of this patent term adjustment calculation including the information required by 37 CFR 1.705(b)(2) and the fee required by 37 CFR 1.18(e), the USPTO will issue a certificate of correction reflecting the PTA determination noted above.

Patentee should be aware that in order to preserve the right to review in the United States District Court for the District of Columbia of the USPTO patent term adjustment determination, patentee must ensure that he or she also take the steps required under 35 U.S.C. 154(b)(4)(A) in a timely manner. Nothing in the request for recalculation should be construed as providing an alternative time frame for commencing a civil action under 35 U.S.C. 154(b)(4)(A).

Any questions concerning this decision should be directed to the Office of Patent Legal Administration at 571-272-7702.

UNITED STATES PATENT AND TRADEMARK OFFICE

UNITED STATES DEPARTMENT OF COMMERCE
United States Patent and Trademark Office
Address: COMMISSIONER FOR PATENTS
P.O. Box 1450
Alexandria, Virginia 22313-1450
www.uspto.gov

Docket Administrator - Room 3D-201E
Alcatel-Lucent USA Inc.
600-700 Mountain Avenue
Murray Hill, NJ 07974

Mail Date: 07/02/2010

Applicant	: David Thomas Stott	: DECISION ON REQUEST FOR
Patent Number	: 7639668	: RECALCULATION of PATENT
Issue Date	: 12/29/2009	: TERM ADJUSTMENT IN VIEW
Application No	: 11/141,516	: OF WYETH AND NOTICE OF INTENT TO
Filed	: 05/31/2005	: ISSUE CERTIFICATE OF CORRECTION
		:

The Request for Recalculation is **GRANTED** to the extent indicated.

The patent term adjustment has been determined to be **1176** days. The USPTO will *sua sponte* issue a certificate of correction reflecting the amount of PTA days determined by the recalculation.

Prior to the issuance of the certificate of correction, the USPTO will afford patentee an opportunity to be heard and request reconsideration. Accordingly, patentee has **one month or thirty (30) days**, whichever is longer, to file a request for reconsideration of this patent term adjustment calculation. See 35 U.S.C. 154(b)(3)(B)(ii) and 37 CFR 1.322(a)(4). No extensions of time will be granted under 37 CFR 1.136.

Patentee should use document code PET.OP if electronically filing a request for reconsideration of this patent term adjustment calculation. The patentee must also include the information required by 37 CFR 1.705(b)(2) and the fee required by 37 CFR 1.18(e). If patentee does not file a timely request for reconsideration of this patent term adjustment calculation including the information required by 37 CFR 1.705(b)(2) and the fee required by 37 CFR 1.18(e), the USPTO will issue a certificate of correction reflecting the PTA determination noted above.

Patentee should be aware that in order to preserve the right to review in the United States District Court for the District of Columbia of the USPTO patent term adjustment determination, patentee must ensure that he or she also take the steps required under 35 U.S.C. 154(b)(4)(A) in a timely manner. Nothing in the request for recalculation should be construed as providing an alternative time frame for commencing a civil action under 35 U.S.C. 154(b)(4)(A).

Any questions concerning this decision should be directed to the Office of Patent Legal Administration at 571-272-7702.

UNITED STATES PATENT AND TRADEMARK OFFICE

UNITED STATES DEPARTMENT OF COMMERCE
United States Patent and Trademark Office
Address: COMMISSIONER FOR PATENTS
P.O. Box 1450
Alexandria, Virginia 22313-1450
www.uspto.gov

FAY SHARPE/LUCENT
1228 Euclid Avenue, 5th Floor
The Halle Building
Cleveland, OH 44115-1843

Mail Date: 07/02/2010

Applicant	: Thierry Bessis	: DECISION ON REQUEST FOR
Patent Number	: 7644165	: RECALCULATION of PATENT
Issue Date	: 01/05/2010	: TERM ADJUSTMENT IN VIEW
Application No	: 11/141,546	: OF WYETH AND NOTICE OF INTENT TO
Filed	: 05/31/2005	: ISSUE CERTIFICATE OF CORRECTION
		:

The Request for Recalculation is **GRANTED** to the extent indicated.

The patent term adjustment has been determined to be **1193** days. The USPTO will *sua sponte* issue a certificate of correction reflecting the amount of PTA days determined by the recalculation.

Prior to the issuance of the certificate of correction, the USPTO will afford patentee an opportunity to be heard and request reconsideration. Accordingly, patentee has **one month or thirty (30) days**, whichever is longer, to file a request for reconsideration of this patent term adjustment calculation. See 35 U.S.C. 154(b)(3)(B)(ii) and 37 CFR 1.322(a)(4). No extensions of time will be granted under 37 CFR 1.136.

Patentee should use document code PET.OP if electronically filing a request for reconsideration of this patent term adjustment calculation. The patentee must also include the information required by 37 CFR 1.705(b)(2) and the fee required by 37 CFR 1.18(e). If patentee does not file a timely request for reconsideration of this patent term adjustment calculation including the information required by 37 CFR 1.705(b)(2) and the fee required by 37 CFR 1.18(e), the USPTO will issue a certificate of correction reflecting the PTA determination noted above.

Patentee should be aware that in order to preserve the right to review in the United States District Court for the District of Columbia of the USPTO patent term adjustment determination, patentee must ensure that he or she also take the steps required under 35 U.S.C. 154(b)(4)(A) in a timely manner. Nothing in the request for recalculation should be construed as providing an alternative time frame for commencing a civil action under 35 U.S.C. 154(b)(4)(A).

Any questions concerning this decision should be directed to the Office of Patent Legal Administration at 571-272-7702.

UNITED STATES PATENT AND TRADEMARK OFFICE

Commissioner for Patents
United States Patent and Trademark Office
P.O. Box 1450
Alexandria, VA 22313-1450
www.uspto.gov

ROCKWELL AUTOMATION, INC. (QB)
ATTENTION : SUSAN M. DONAHUE, E-7F19
1201 SOUTH SECOND STREET
MILWAUKEE, WI 53204

COPY MAILED

MAR 2 3 2009

OFFICE OF PETITIONS

In re Application of
Kevin L. Baumann et al
Application No. 11/141,549
Filed: May 31, 2005
Attorney Docket No. 05AB042

ON PETITION

This is a decision on the petition filed February 18, 2009 under 37 CFR 1.137(b), to revive the above-identified application.

The petition is **GRANTED.**

The above-identified application became abandoned for failure to submit the Issue fee and Publication fee in a timely manner in reply to the Notice of Allowance mailed February 21, 2008, which set a statutory period for reply of three (3) months. Accordingly, the above-identified application became abandoned on May 22, 2008.

The petition satisfies the conditions for revival pursuant to the provisions of 37 CFR 1.137(b) in that (1) the reply in the form of payment of the Issue fee and Publication fee; (2) the petition fee; and (3) the required statement of unintentional delay have been received. Accordingly, the issue fee is accepted as having been unintentionally delayed.

Telephone inquiries concerning this decision should be directed to the undersigned at (571) 272-3210.

This matter is being referred to the Office of Data Management for further processing.

Irvin Dingle
Petitions Examiner
Office of Petitions

UNITED STATES PATENT AND TRADEMARK OFFICE

UNITED STATES DEPARTMENT OF COMMERCE
United States Patent and Trademark Office
Address: COMMISSIONER FOR PATENTS
P.O. Box 1450
Alexandria, Virginia 22313-1450
www.uspto.gov

PCE INDUSTRY, INC.
ATT. Steven Reiss
288 SOUTH MAYO AVENUE
CITY OF INDUSTRY, CA 91789

Mail Date: 04/21/2010

Applicant	: Shou-Shan Fan	: DECISION ON REQUEST FOR
Patent Number	: 7625530	: RECALCULATION of PATENT
Issue Date	: 12/01/2009	: TERM ADJUSTMENT IN VIEW
Appliction No	: 11/141,575	: OF WYETH AND NOTICE OF INTENT TO
Filed	: 05/31/2005	: ISSUE CERTIFICATE OF CORRECTION
		:

The Request for Recalculation is **GRANTED** to the extent indicated.

The patent term adjustment has been determined to be **895** days. The USPTO will *sua sponte* issue a certificate of correction reflecting the amount of PTA days determined by the recalculation.

Prior to the issuance of the certificate of correction, the USPTO will afford patentee an opportunity to be heard and request reconsideration. Accordingly, patentee has **one month or thirty (30) days**, whichever is longer, to file a request for reconsideration of this patent term adjustment calculation. See 35 U.S.C. 154(b)(3)(B)(ii) and 37 CFR 1.322(a)(4). No extensions of time will be granted under 37 CFR 1.136.

Patentee should use document code PET.OP if electronically filing a request for reconsideration of this patent term adjustment calculation. The patentee must also include the information required by 37 CFR 1.705(b)(2) and the fee required by 37 CFR 1.18(e). If patentee does not file a timely request for reconsideration of this patent term adjustment calculation including the information required by 37 CFR 1.705(b)(2) and the fee required by 37 CFR 1.18(e), the USPTO will issue a certificate of correction reflecting the PTA determination noted above.

Patentee should be aware that in order to preserve the right to review in the United States District Court for the District of Columbia of the USPTO patent term adjustment determination, patentee must ensure that he or she also take the steps required under 35 U.S.C. 154(b)(4)(A) in a timely manner. Nothing in the request for recalculation should be construed as providing an alternative time frame for commencing a civil action under 35 U.S.C. 154(b)(4)(A).

Any questions concerning this decision should be directed to the Office of Patent Legal Administration at 571-272-7702.

UNITED STATES PATENT AND TRADEMARK OFFICE

UNITED STATES DEPARTMENT OF COMMERCE
United States Patent and Trademark Office
Address: COMMISSIONER FOR PATENTS
P.O. Box 1450
Alexandria, Virginia 22313-1450
www.uspto.gov

MOORE & VAN ALLEN PLLC
P.O. BOX 13706
Research Triangle Park, NC 27709

Mail Date: 04/21/2010

Applicant	: Kenneth J. Muderlak	: DECISION ON REQUEST FOR
Patent Number	: 7611317	: RECALCULATION of PATENT
Issue Date	: 11/03/2009	: TERM ADJUSTMENT IN VIEW
Appliction No	: 11/141,592	: OF WYETH AND NOTICE OF INTENT TO
Filed	: 05/31/2005	: ISSUE CERTIFICATE OF CORRECTION
		:

The Request for Recalculation is **GRANTED** to the extent indicated.

The patent term adjustment has been determined to be **259** days. The USPTO will *sua sponte* issue a certificate of correction reflecting the amount of PTA days determined by the recalculation.

Prior to the issuance of the certificate of correction, the USPTO will afford patentee an opportunity to be heard and request reconsideration. Accordingly, patentee has **one month or thirty (30) days**, whichever is longer, to file a request for reconsideration of this patent term adjustment calculation. See 35 U.S.C. 154(b)(3)(B)(ii) and 37 CFR 1.322(a)(4). No extensions of time will be granted under 37 CFR 1.136.

Patentee should use document code PET.OP if electronically filing a request for reconsideration of this patent term adjustment calculation. The patentee must also include the information required by 37 CFR 1.705(b)(2) and the fee required by 37 CFR 1.18(e). If patentee does not file a timely request for reconsideration of this patent term adjustment calculation including the information required by 37 CFR 1.705(b)(2) and the fee required by 37 CFR 1.18(e), the USPTO will issue a certificate of correction reflecting the PTA determination noted above.

Patentee should be aware that in order to preserve the right to review in the United States District Court for the District of Columbia of the USPTO patent term adjustment determination, patentee must ensure that he or she also take the steps required under 35 U.S.C. 154(b)(4)(A) in a timely manner. Nothing in the request for recalculation should be construed as providing an alternative time frame for commencing a civil action under 35 U.S.C. 154(b)(4)(A).

Any questions concerning this decision should be directed to the Office of Patent Legal Administration at 571-272-7702.

UNITED STATES PATENT AND TRADEMARK OFFICE

UNITED STATES DEPARTMENT OF COMMERCE
United States Patent and Trademark Office
Address: COMMISSIONER FOR PATENTS
P.O. Box 1450
Alexandria, Virginia 22313-1450
www.uspto.gov

ORRICK, HERRINGTON & SUTCLIFFE, LLP
IP PROSECUTION DEPARTMENT
4 PARK PLAZA
SUITE 1600
IRVINE, CA 92614-2558

Mail Date: 04/21/2010

Applicant	: Mitchell G. Poplack	: DECISION ON REQUEST FOR
Patent Number	: 7640155	: RECALCULATION of PATENT
Issue Date	: 12/29/2009	: TERM ADJUSTMENT IN VIEW
Appliction No	: 11/141,599	: OF WYETH AND NOTICE OF INTENT TO
Filed	: 05/31/2005	: ISSUE CERTIFICATE OF CORRECTION
		:

The Request for Recalculation is **GRANTED** to the extent indicated.

The patent term adjustment has been determined to be **1077** days. The USPTO will *sua sponte* issue a certificate of correction reflecting the amount of PTA days determined by the recalculation.

Prior to the issuance of the certificate of correction, the USPTO will afford patentee an opportunity to be heard and request reconsideration. Accordingly, patentee has **one month or thirty (30) days**, whichever is longer, to file a request for reconsideration of this patent term adjustment calculation. See 35 U.S.C. 154(b)(3)(B)(ii) and 37 CFR 1.322(a)(4). No extensions of time will be granted under 37 CFR 1.136.

Patentee should use document code PET.OP if electronically filing a request for reconsideration of this patent term adjustment calculation. The patentee must also include the information required by 37 CFR 1.705(b)(2) and the fee required by 37 CFR 1.18(e). If patentee does not file a timely request for reconsideration of this patent term adjustment calculation including the information required by 37 CFR 1.705(b)(2) and the fee required by 37 CFR 1.18(e), the USPTO will issue a certificate of correction reflecting the PTA determination noted above.

Patentee should be aware that in order to preserve the right to review in the United States District Court for the District of Columbia of the USPTO patent term adjustment determination, patentee must ensure that he or she also take the steps required under 35 U.S.C. 154(b)(4)(A) in a timely manner. Nothing in the request for recalculation should be construed as providing an alternative time frame for commencing a civil action under 35 U.S.C. 154(b)(4)(A).

Any questions concerning this decision should be directed to the Office of Patent Legal Administration at 571-272-7702.

UNITED STATES PATENT AND TRADEMARK OFFICE

Commissioner for Patents
United States Patent and Trademark Office
P.O. Box 1450
Alexandria, VA 22313-1450
www.uspto.gov

ADAMS EVANS PA
301 S TRYON ST
2180 WACHOVIA CENTER
CHARLOTTE NC 28282

COPY MAILED
AUG 0 7 2006
OFFICE OF PETITIONS

In re Application of	:	
Glenn A. Johnson	:	
Application No. 11/141,621	:	ON PETITION
Filed: May 31, 2005	:	
Attorney Docket No. 965/146US-A	:	

This is a decision on the petition to revive under 37 CFR 1.137(b), filed April 4, 2006.

The petition under 37 CFR 1.137(b) is **GRANTED**.

The above-identified application became abandoned for failure to timely file a reply in response to the non-final Office action mailed August 23, 2005. This Office action set a shortened statutory period for reply of three (3) months. No extensions of time under 37 CFR 1.136(a) were obtained. No reply having been received, the above identified application became abandoned on November 24, 2005. A Notice of Abandonment was mailed on March 31, 2006.

With the instant petition, applicant paid the petition fee, submitted the required reply in the form of an amendment, and made the proper statement of unintentional delay.

Receipt of the $1,500 petition fee is acknowledged.

The matter is being forwarded to Group Art Unit 3636 for consideration of the amendment filed April 4, 2006.

Telephone inquiries related to this decision should be directed to the undersigned at (571)272-3207.

Cliff Congo
Petitions Attorney
Office of Petitions

UNITED STATES PATENT AND TRADEMARK OFFICE

UNITED STATES DEPARTMENT OF COMMERCE
United States Patent and Trademark Office
Address: COMMISSIONER FOR PATENTS
P.O. Box 1450
Alexandria, Virginia 22313-1450
www.uspto.gov

VOLPE AND KOENIG, P.C.
DEPT. ICC
UNITED PLAZA, SUITE 1600
30 SOUTH 17TH STREET
PHILADELPHIA, PA 19103

Mail Date: 04/21/2010

Applicant	: Robert T. Regis	: DECISION ON REQUEST FOR
Patent Number	: 7631027	: RECALCULATION of PATENT
Issue Date	: 12/08/2009	: TERM ADJUSTMENT IN VIEW
Appliction No	: 11/141,622	: OF WYETH AND NOTICE OF INTENT TO
Filed	: 05/31/2005	: ISSUE CERTIFICATE OF CORRECTION
		:

The Request for Recalculation is **GRANTED** to the extent indicated.

The patent term adjustment has been determined to be **1184** days. The USPTO will *sua sponte* issue a certificate of correction reflecting the amount of PTA days determined by the recalculation.

Prior to the issuance of the certificate of correction, the USPTO will afford patentee an opportunity to be heard and request reconsideration. Accordingly, patentee has **one month or thirty (30) days**, whichever is longer, to file a request for reconsideration of this patent term adjustment calculation. See 35 U.S.C. 154(b)(3)(B)(ii) and 37 CFR 1.322(a)(4). No extensions of time will be granted under 37 CFR 1.136.

Patentee should use document code PET.OP if electronically filing a request for reconsideration of this patent term adjustment calculation. The patentee must also include the information required by 37 CFR 1.705(b)(2) and the fee required by 37 CFR 1.18(e). If patentee does not file a timely request for reconsideration of this patent term adjustment calculation including the information required by 37 CFR 1.705(b)(2) and the fee required by 37 CFR 1.18(e), the USPTO will issue a certificate of correction reflecting the PTA determination noted above.

Patentee should be aware that in order to preserve the right to review in the United States District Court for the District of Columbia of the USPTO patent term adjustment determination, patentee must ensure that he or she also take the steps required under 35 U.S.C. 154(b)(4)(A) in a timely manner. Nothing in the request for recalculation should be construed as providing an alternative time frame for commencing a civil action under 35 U.S.C. 154(b)(4)(A).

Any questions concerning this decision should be directed to the Office of Patent Legal Administration at 571-272-7702.

UNITED STATES PATENT AND TRADEMARK OFFICE

UNITED STATES DEPARTMENT OF COMMERCE
United States Patent and Trademark Office
Address: COMMISSIONER FOR PATENTS
P.O. Box 1450
Alexandria, Virginia 22313-1450
www.uspto.gov

VOLPE AND KOENIG, P.C.
DEPT. ICC
UNITED PLAZA, SUITE 1600
30 SOUTH 17TH STREET
PHILADELPHIA, PA 19103

Mail Date: 05/18/2010

Applicant : Robert T. Regis
Patent Number : 7631027
Issue Date : 12/08/2009
Application No : 11/141,622
Filed : 05/31/2005

: NOTICE CONCERNING IMPROPER
: CALCULATION OF PATENT TERM
: ADJUSTMENT BASED UPON USPTO
: IMPROPERLY MEASURING REDUCTION
: PERIOD UNDER 37 CFR 1.704(c)(10).

The United States Patent and Trademark Office (USPTO) discovered that in processing the recent recalculation decisions mailed in response to patentee's filed Request for Recalculation of Patent Term Adjustment in view of Wyeth, the USPTO improperly measured the reduction period for reductions under 37 CFR 1.704(c)(10). Pursuant to 37 CFR 1.704(c)(10), patentee's reduction begins on the date of filing the amendment under 37 CFR 1.312 ("1.312 amendment") or other related paper and ends on the date that the Office mails a response to the filing of the 1.312 amendment or other paper. It has been discovered that during the recalculation, the calculation failed to the limit the reduction to the mail date of the response to the 1.312 amendment or other paper. Accordingly, patentee's reductions were greater than warranted.

This notice **VACATES** the previous GRANTED request for recalculation and provides patentee with a revised GRANTED recalculation.

The patent term adjustment has been determined to be **1213** days. The USPTO will *sua sponte* issue a certificate of correction reflecting the amount of patent term adjustment (PTA) days determined by the recalculation.

Prior to the issuance of the certificate of correction, the USPTO will afford patentee an opportunity to be heard and request reconsideration. Accordingly, patentee has **one month or thirty (30) days** from the mail date of this notice, whichever is longer, to file a request for reconsideration of this PTA calculation. See 35 U.S.C. § 154(b)(3)(B)(ii) and 37 CFR 1.322(a)(4).

Patentee should use document code PET.OP if electronically filing a request for reconsideration of this PTA calculation. The patentee must also include the information required by 37 CFR 1.705(b)(2), and the fee required by 37 CFR 1.18(e). If patentee does not file a timely request for reconsideration of this PTA calculation, including the information required by 37 CFR 1.705(b)(2) and the fee required by 37 CFR 1.18(e), the USPTO will issue a certificate of correction reflecting the PTA determination noted above.

Patentee should be aware that in order to preserve the right of review of the USPTO's PTA determination in the United States District Court for the District of Columbia, patentee must ensure that the steps required under 35 U.S.C. § 154 (b)(4) are taken in a timely manner. Nothing in the request for recalculation should be construed as providing an alternative time frame for commencing a civil action under 35 U.S.C. § 154(b)(4).

UNITED STATES PATENT AND TRADEMARK OFFICE

Commissioner for Patents
United States Patent and Trademark Office
P.O. Box 1450
Alexandria, VA 22313-1450
www.uspto.gov

PRATT & WHITNEY
400 MAIN STREET
MAIL STOP: 132-13
EAST HARTFORD CT 06108

MAILED

MAY 14 2009

OFFICE OF PETITIONS

In re Application of	:	
Awadh B. Pandey	:	
Application No.: 11/141625	:	ON PETITION
Filing or 371(c) Date: 05/31/2005	:	
Attorney Docket Number:	:	
EH-11287	:	

This is a decision on the Petition for Revival of an Application for Patent Abandoned Unintentionally Under 37 C.F.R. § 1.137(b), filed March 25, 2009.

This Petition is hereby **granted**.

The above-identified application became abandoned for failure to timely reply to the non-final Office action, mailed June 9, 2008. The Office action set a three (3) period for reply. Extensions of time under 37 CFR 1.136(a) were available. No reply having been received, the application became abandoned on September 10, 2008. A Notice of Abandonment was mailed January 26, 2009.

Applicant files the present petition and includes an Amendment in response to the Office action. The petition satisfies the conditions for revival pursuant to the provisions of 37 CFR 1.137(b) in that (1) the reply in the form of an Amendment is filed with the present petition; (2) the petition fee; and (3) the required statement of unintentional delay. Accordingly, the reply is accepted as having been unintentionally delayed.

This application is being referred to Technology Center Art Unit 1793 for processing of the Amendment filed with the petition in the normal course of business.

Telephone inquiries concerning this decision should be directed to the undersigned at (571) 272-3232.

/Derek L. Woods/
Derek L. Woods
Attorney
Office of Petitions

UNITED STATES PATENT AND TRADEMARK OFFICE

COMMISSIONER FOR PATENTS
UNITED STATES PATENT AND TRADEMARK OFFICE
P.O. BOX 1450
ALEXANDRIA, VA 22313-1450
www.uspto.gov

PEPPER HAMILTON, LLP
ONE MILLION CENTER, 50TH FLOOR
PITTSBURGH, PA 15219

COPY MAILED

JUL 30 2008

OFFICE OF PETITIONS

Applicant: Shi
Appl. No.: 11/141,638
Filing Date: May 31, 2005
Title: COMPOSITIONS AND METHODS FOR REGULATING APOPTOSIS
Attorney Docket No.: 112911.01711
Pub. No.: 2007/0142299 A1
Pub. Date: June 21, 2007

This is a decision on the request for corrected of patent application publication under 37 CFR 1.221(b), received on August 8, 2007, for the above-identified application.

The request is granted.

The corrected patent application publication will be published in due course, unless the patent issues before the application is republished.

Applicant is advised that he may want to file application papers that are clearer, as the some of the errors may be due to the quality of the text. The text is small, which makes it difficult to read and to electronically reproduce by digital imaging and optical character recognition. Applicants have been advised to file applications having cleaner and larger text with sufficient clarity and contrast to permit reproduction, such as electronic reproduction by digital imaging and optical character recognition, which will avoid errors in the patent application publication process. See 37 CFR 1.52.

It would greatly benefit the Office if **applicant did not provide copies of papers**, which were previously submitted or **a complete copy of the pre-grant publication**, as it unnecessarily increases the cost to the Office. See 37 CFR 1.4(b).

Inquiries relating to this matter may be directed to Mark O. Polutta at (703) 272-7709.

Mark O. Polutta
Senior Legal Advisor
Office of Patent Legal Administration
Office of the Deputy Commissioner
for Patent Examination Policy

UNITED STATES PATENT AND TRADEMARK OFFICE

Commissioner for Patents
United States Patent and Trademark Office
P.O. Box 1450
Alexandria, VA 22313-1450
www.uspto.gov

PALMER & DODGE LLP
KATHLEEN M. WILLIAMS
111 HUNTINGTON AVENUE
BOSTON, MA 02199

COPY MAILED

FEB 20 2007

OFFICE OF PETITIONS

In re Application of	:	
Greg Winter et al	:	
Application No. 11/141,661	:	DECISION ON PETITION
Filed: May 31, 2005	:	UNDER 37 CFR 1.78(a)(3)
Attorney Docket No. 208039/2152	:	AND 37 CFR 1.55(c)

This is a decision on the petition, filed September 15, 2006, which is being treated under the provisions of 37 CFR 1.78(a)(3) and 37 CFR 1.55(c) to accept an unintentionally delayed claim under 35 U.S.C. §§ 120 and 365(c) for the benefit of priority to prior-filed nonprovisional Application No. 10/744,774, filed December 23, 2003 and to international Application No. PCT/GB02/03014, filed June 28, 2002, and under 35 U.S.C. § 119(a)-(d) for the benefit of priority to prior-filed foreign Application No. GB 0115841.9, filed June 28, 2001, as set forth in the concurrently filed amendment.

As to the benefit claim under 37 CFR 1.78(a)(3):

A petition for acceptance of a claim for late priority under 37 CFR 1.78(a)(3) is only applicable to those applications filed on or after November 29, 2000 and after the expiration of the period specified in 37 CFR 1.78(a)(2)(ii). In addition, the petition under 37 CFR 1.78(a)(3) must be accompanied by:

(1) the reference required by 35 U.S.C. § 120 and 37 CFR 1.78(a)(2)(i) and (iii) of the prior-filed application, unless previously submitted;
(2) the surcharge set forth in § 1.17(t); and
(3) a statement that the entire delay between the date the claim was due under 37 CFR 1.78(a)(2)(ii) and the date the claim was filed was unintentional. The Director may require additional information where there is a question whether the delay was unintentional.

The amendment as drafted is presently unacceptable since it contains a reference to a foreign application, which is not granted by this petition for the reason indicated below. Petitioner should note that, while a claim for foreign priority may be in any form, it is more appropriate for a claim for foreign priority to appear in an oath or declaration or in an Application Data Sheet

and not as part of an amendment to the first line of the specification following the title of the invention.

The petition under 37 CFR 1.78(a)(3) is **DISMISSED**.

As to the benefit claim under 37 CFR 1.55(c):

A petition under 37 CFR 1.55(c) to accept an unintentionally delayed claim for priority requires:

(1) the nonprovisional application claiming the benefit of an earlier filing date must be filed on or after November 29, 2000;
(2) the claim submitted with the petition must identify the prior foreign application for which priority is claimed, as well as any foreign application for the same subject matter and having a filing date before that of the application for which priority is claimed, by the application number, country, and the filing date, **and be included either in an oath or declaration (37 CFR 1.63(c)(2)) or in an Application Data Sheet (37 CFR 1.76(b)(6);**
(3) the surcharge as set forth in 37 CFR 1.17(t);
(4) a statement that the entire delay between the date the claim was due under 37 CFR 1.55(a)(1) and the date the claim was filed was unintentional. (The Director may require additional information where there is a question whether the delay was unintentional); and
(5) the above-identified nonprovisional application must be filed within 12 months of the filing date of the foreign application.

The petition under 37 CFR 1.55(c) is **DISMISSED**.

The petition fails to comply with item (2) above. In this regard, the claim for benefit of priority to foreign Application No. GB 0115841.9, filed June 28, 2001, was not included in an oath or declaration or in an Application Data Sheet (ADS) in accordance with 37 CFR 1.76(b)(6). Unless provided in an ADS, 37 CFR 1.63(c)(2) requires that the oath or declaration must identify the foreign application for patent for which priority is claimed under 37 CFR 1.55, and any foreign application having a filing date before that of the application on which priority is claimed, by specifying the application number, country, day, month, and year of its filing. *Note* MPEP 201.14.

In view of the above, compliance with 37 CFR 1.63(c)(2) or 37 CFR 1.76(b)(6) must be satisfied if applicant desires to claim benefit of priority to foreign Application No. GB 022841.9, filed June 28, 2001. Any future petition should include a cover letter and be entitled "**Renewed Petition under 37 CFR 1.78(3)(3) and 37 CFR 1.55(c).**"

Petitioner is advised that any claim for domestic priority 35 U.S.C. § 120 must be included in either an amendment to the first line of the specification following the title or in an Application Data Sheet and any claim for foreign priority must be included under 35 U.S.C. § 119(a)-(d) on either the oath or declaration or an Application Data Sheet.

Further correspondence with respect to this matter should be addressed as follows:

By mail:	Mail Stop PETITIONS Commissioner for Patents Post Office Box 1450 Alexandria, VA 22313-1450
By hand:	Customer Service Window Mail Stop Petitions Randolph Building 401 Dulany Street Alexandria, VA 22314
By fax:	(571) 273-8300 ATTN: Office of Petitions

Any questions concerning this matter may be directed to the undersigned at (571) 272-3218.

Frances Hicks
Petitions Examiner
Office of Petitions

UNITED STATES PATENT AND TRADEMARK OFFICE

COMMISSIONER FOR PATENTS
UNITED STATES PATENT AND TRADEMARK OFFICE
P.O. BOX 1450
ALEXANDRIA, VA 22313-1450
www.uspto.gov

PALMER & DODGE LLP
KATHLEEN M. WILLIAMS
111 HUNTINGTON AVENUE
BOSTON, MA 02199

COPY MAILED

JUL 17 2007

OFFICE OF PETITIONS

In re Application of	:	
Greg Winter et al	:	
Application No. 11/141,661	:	DECISION ON PETITIONS
Filed: May 31, 2005	:	UNDER 37 CFR 1.78(a)(3)
Attorney Docket No. 208039/2152	:	AND 37 CFR 1.55(c)

This is a decision on the renewed petition under 37 CFR 1.78(a)(3) and 37 CFR 1.55(c), filed April 25, 2007, to accept an unintentionally delayed claim under 35 U.S.C. §§ 120 and 365(c) for the benefit of priority to the prior-filed applications noted on the concurrently filed Application Data Sheet (ADS).

As to the benefit claim under 37 CFR 1.78(a)(3):

A petition for acceptance of a claim for late priority under 37 CFR 1.78(a)(3) is only applicable to those applications filed on or after November 29, 2000 and after the expiration of the period specified in 37 CFR 1.78(a)(2)(ii). In addition, the petition under 37 CFR 1.78(a)(3) must be accompanied by:

(1) the reference required by 35 U.S.C. § 120 and 37 CFR 1.78(a)(2)(i) and (iii) of the prior-filed application, unless previously submitted;
(2) the surcharge set forth in § 1.17(t); and
(3) a statement that the entire delay between the date the claim was due under 37 CFR 1.78(a)(2)(ii) and the date the claim was filed was unintentional. The Director may require additional information where there is a question whether the delay was unintentional.

The ADS as drafted is presently unacceptable since it does not properly reference the applications for domestic priority. In this regard, it appears that the applications to which domestic priority should be claimed are listed under foreign priority. The following format is suggested for the ADS to set forth the proper priority claim for domestic priority:

Domestic Priority Information:	Application No.	Filing Date:
This application is a continuation of	PCT/GB03/05646	12/24/03
This application is also a continuation-in-part of	10/744,774	12/23/03
And App. No. 10/744,774 is a continuation of	PCT/GB02/03014	06/28/02

As currently listed, the applications under the foreign priority information were not filed within one year of Application No. 10/744,774, the only application now appearing under the domestic priority information block.

In view of the above, the petition under 37 CFR 1.78(a)(3) is **DISMISSED**.

As to the benefit claim under 37 CFR 1.55(c):

A petition under 37 CFR 1.55(c) to accept an unintentionally delayed claim for priority requires:

(1) the nonprovisional application claiming the benefit of an earlier filing date must be filed on or after November 29, 2000;
(2) the claim submitted with the petition must identify the prior foreign application for which priority is claimed, as well as any foreign application for the same subject matter and having a filing date before that of the application for which priority is claimed, by the application number, country, and the filing date, **and be included either in an oath or declaration (37 CFR 1.63(c)(2)) or in an Application Data Sheet (37 CFR 1.76(b)(6);**
(3) the surcharge as set forth in 37 CFR 1.17(t);
(4) a statement that the entire delay between the date the claim was due under 37 CFR 1.55(a)(1) and the date the claim was filed was unintentional. (The Director may require additional information where there is a question whether the delay was unintentional); and
(5) the above-identified nonprovisional application must be filed within 12 months of the filing date of the foreign application.

The petition under 37 CFR 1.55(c) is **DISMISSED**.

The petition fails to comply with item (2) above. The ADS as drafted is presently unacceptable since it does not appear to properly reference the applications for foreign priority. In this regard, the applications to which domestic priority should be claimed are listed under foreign priority. It appears that only the applications listed below should appear under foreign priority:

Foreign Priority Information:

Country:	Application No.	Filing Date:	Foreign Priority Claimed:
Great Britain	0230302.4	12/27/02	Yes
Great Britain	PCT/GB03/02804	06/30/03	Yes
Great Britain	0327706.8	11/28/03	Yes
Great Britain	0115841.9	06/28/01	Yes

In view of the above, the petition cannot be granted at this time. Any future petition should include a cover letter and be entitled "**Renewed Petition under 37 CFR 1.78(3)(3) and 37 CFR 1.55(c).**"

The above suggested formats are only for petitioner's benefit. Petitioner should check the claim for priority in the above formats and determine whether this is how the claim should read.

Petitioner is advised that any claim for domestic priority 35 U.S.C. § 120 must be included in either an amendment to the first line of the specification following the title or in an Application Data Sheet and any claim for foreign priority must be included under 35 U.S.C. § 119(a)-(d) on either the oath or declaration or an Application Data Sheet.

Further correspondence with respect to this matter should be addressed as follows:

By mail: Mail Stop PETITION
Commissioner for Patents
Post Office Box 1450
Alexandria, VA 22313-1450

By hand: Customer Service Window
Mail Stop Petitions
Randolph Building
401 Dulany Street
Alexandria, VA 22314

By fax: (571) 273-8300
ATTN: Office of Petitions

Correspondence regarding this decision may also be filed through the Electronic Filing System of the USPTO.

To expedite consideration, petitioner may wish to contact the undersigned regarding the filing of the renewed petition under 37 CFR 1.78(a)(3) and 1.55(c).

Any questions concerning this matter may be directed to the undersigned at (571) 272-3218.

Frances Hicks
Petitions Examiner
Office of Petitions

UNITED STATES PATENT AND TRADEMARK OFFICE

Commissioner for Patents
United States Patent and Trademark Office
P.O. Box 1450
Alexandria, VA 22313-1450
www.uspto.gov

PALMER & DODGE LLP
KATHLEEN M. WILLIAMS
111 HUNTINGTON AVENUE
BOSTON, MA 02199

COPY MAILED

NOV 2 8 2007

OFFICE OF PETITIONS

In re Application of
Greg Winter et al
Application No. 11/141,661
Filed: May 31, 2005
Attorney Docket No. 208039/2152

DECISION ON PETITIONS
UNDER 37 CFR 1.78(a)(3)
AND 37 CFR 1.55(c)

This is a decision on the renewed petition under 37 CFR 1.78(a)(3) and 37 CFR 1.55(c), filed September 13, 2007, to accept an unintentionally delayed claim under 35 U.S.C. §§ 120, 365(c) and 119(a)-(d) for the benefit of priority to the prior-filed applications noted on the concurrently filed Application Data Sheet (ADS).

As to the benefit claim under 37 CFR 1.78(a)(3):

A petition for acceptance of a claim for late priority under 37 CFR 1.78(a)(3) is only applicable to those applications filed on or after November 29, 2000 and after the expiration of the period specified in 37 CFR 1.78(a)(2)(ii). In addition, the petition under 37 CFR 1.78(a)(3) must be accompanied by:

(1) the reference required by 35 U.S.C. § 120 and 37 CFR 1.78(a)(2)(i) and (iii) of the prior-filed application, unless previously submitted;
(2) the surcharge set forth in § 1.17(t); and
(3) a statement that the entire delay between the date the claim was due under 37 CFR 1.78(a)(2)(ii) and the date the claim was filed was unintentional. The Director may require additional information where there is a question whether the delay was unintentional.

All requirements being met, the petition to accept an unintentionally delayed claim for priority under 37 CFR 1.78(a)(3) is **GRANTED.**

As to the benefit claim under 37 CFR 1.55(c):

A petition under 37 CFR 1.55(c) to accept an unintentionally delayed claim for priority requires:

(1) The nonprovisional application claiming the benefit of an earlier filing date must be filed on or after November 29, 2000;
(2) the claim submitted with the petition must identify the prior foreign application for which priority is claimed, as well as any foreign application for the same subject matter and having a filing date before that

of the application for which priority is claimed, by the application number, country, and the filing date, and be included either in an oath or declaration (37 CFR 1.63(c)(2)) or in an Application Data Sheet (37 CFR 1.76(b)(6);

(3) the surcharge as set forth in 37 CFR 1.17(t);

(4) a statement that the entire delay between the date the claim was due under 37 CFR 1.55(a)(1) and the date the claim was filed was unintentional. (The Director may require additional information where there is a question whether the delay was unintentional); and

(5) the application claiming benefit of the foreign application must be filed within 12 months of the filing date of the foreign application.

All requirements being met, the petition under 37 CFR 1.55(c) to accept an unintentionally delayed claim for priority under 35 U.S.C. § 119(a)-(d) is **GRANTED**.

The granting of the petition to accept the delayed benefit claim to the prior-filed applications under 37 CFR 1.78(a)(3) and 37 CFR 1.55(c) should not be construed as meaning that this application is entitled to the benefit of the prior-filed applications. In order for this application to be entitled to the benefit of the prior-filed applications, all other requirements under 35 U.S.C. §§ 120 and 365(c) and 37 CFR 1.78(a)(1) and (a)(2) and 35 § U.S.C. 119(a)-(d) and 37 CFR 1.55(a)(1) must be met. Similarly, the fact that the corrected Filing Receipt accompanying this decision on petition includes the prior-filed applications should not be construed as meaning that applicant is entitled to the claim for benefit of priority to the prior-filed applications noted thereon. Accordingly, the examiner will, in due course, consider this benefit claim and determine whether this application is entitled to the benefit of the earlier filing date.

A corrected Filing Receipt, which includes the priority claim to the prior-filed applications, accompanies this decision on petition.

Any inquiries concerning this decision may be directed to the undersigned at (571) 272-3218. All other inquiries concerning either the examination procedures or status of the application should be directed to the Technology Center.

This application is being to referred to Technology Center Art Unit 1644 for consideration by the examiner of applicant's entitlement to claim benefit of priority under 35 U.S.C. §§ 120, 365(c) and 35 U.S.C. § 119(a)-(d) to the prior-filed applications.

Frances Hicks

Frances Hicks
Petitions Examiner
Office of Petitions

ATTACHMENT: Corrected Filing Receipt

UNITED STATES PATENT AND TRADEMARK OFFICE

UNITED STATES DEPARTMENT OF COMMERCE
United States Patent and Trademark Office
Address: COMMISSIONER FOR PATENTS
P.O. Box 1450
Alexandria, Virginia 22313-1450
www.uspto.gov

APPLICATION NUMBER	FILING or 371(c) DATE	GRP ART UNIT	FIL FEE REC'D	ATTY.DOCKET.NO	TOT CLAIMS	IND CLAIMS
11/141,661	05/31/2005	1644	5910	208039/2152	48	5

CONFIRMATION NO. 7738

CORRECTED FILING RECEIPT

29933
PALMER & DODGE, LLP
KATHLEEN M. WILLIAMS
111 HUNTINGTON AVENUE
BOSTON, MA 02199

OC000000026943800

Date Mailed: 11/28/2007

Receipt is acknowledged of this non-provisional patent application. The application will be taken up for examination in due course. Applicant will be notified as to the results of the examination. Any correspondence concerning the application must include the following identification information: the U.S. APPLICATION NUMBER, FILING DATE, NAME OF APPLICANT, and TITLE OF INVENTION. Fees transmitted by check or draft are subject to collection. Please verify the accuracy of the data presented on this receipt. **If an error is noted on this Filing Receipt, please write to the Office of Initial Patent Examination's Filing Receipt Corrections. Please provide a copy of this Filing Receipt with the changes noted thereon. If you received a "Notice to File Missing Parts" for this application, please submit any corrections to this Filing Receipt with your reply to the Notice. When the USPTO processes the reply to the Notice, the USPTO will generate another Filing Receipt incorporating the requested corrections**

Applicant(s)

Greg Winter, Great Court, UNITED KINGDOM;
Ian Tomlinson, Abington, UNITED KINGDOM;
Olga Ignatovich, Abington, UNITED KINGDOM;
Ben Woolven, Abington, UNITED KINGDOM;
Philip Jones, Impington, UNITED KINGDOM;

Assignment For Published Patent Application

Domantis Limited

Power of Attorney: The patent practitioners associated with Customer Number 29933

Domestic Priority data as claimed by applicant

This application is a CON of PCT/GB03/05646 12/24/2003
and is a CIP of 10/744,774 12/23/2003
which is a CON of PCT/GB02/03014 06/28/2002

Foreign Applications

UNITED KINGDOM GB 0230202.4 12/27/2002
UNITED KINGDOM GB 0327706.8 11/28/2003
UNITED KINGDOM PCT/GB03/02804 06/30/2003
UNITED KINGDOM 0115841.9 06/28/2001

If Required, Foreign Filing License Granted: 07/05/2005

The country code and number of your priority application, to be used for filing abroad under the Paris Convention, is **US 11/141,661**

Projected Publication Date: Not Applicable

Non-Publication Request: No

Early Publication Request: No
Title

Ligand

Preliminary Class

424

PROTECTING YOUR INVENTION OUTSIDE THE UNITED STATES

Since the rights granted by a U.S. patent extend only throughout the territory of the United States and have no effect in a foreign country, an inventor who wishes patent protection in another country must apply for a patent in a specific country or in regional patent offices. Applicants may wish to consider the filing of an international application under the Patent Cooperation Treaty (PCT). An international (PCT) application generally has the same effect as a regular national patent application in each PCT-member country. The PCT process **simplifies** the filing of patent applications on the same invention in member countries, but **does not result** in a grant of "an international patent" and does not eliminate the need of applicants to file additional documents and fees in countries where patent protection is desired.

Almost every country has its own patent law, and a person desiring a patent in a particular country must make an application for patent in that country in accordance with its particular laws. Since the laws of many countries differ in various respects from the patent law of the United States, applicants are advised to seek guidance from specific foreign countries to ensure that patent rights are not lost prematurely.

Applicants also are advised that in the case of inventions made in the United States, the Director of the USPTO must issue a license before applicants can apply for a patent in a foreign country. The filing of a U.S. patent application serves as a request for a foreign filing license. The application's filing receipt contains further information and guidance as to the status of applicant's license for foreign filing.

Applicants may wish to consult the USPTO booklet, "General Information Concerning Patents" (specifically, the section entitled "Treaties and Foreign Patents") for more information on timeframes and deadlines for filing foreign patent applications. The guide is available either by contacting the USPTO Contact Center at 800-786-9199, or it can be viewed on the USPTO website at http://www.uspto.gov/web/offices/pac/doc/general/index.html.

For information on preventing theft of your intellectual property (patents, trademarks and copyrights), you may wish to consult the U.S. Government website, http://www.stopfakes.gov. Part of a Department of Commerce initiative, this website includes self-help "toolkits" giving innovators guidance on how to protect intellectual property in specific countries such as China, Korea and Mexico. For questions regarding patent enforcement issues, applicants may call the U.S. Government hotline at 1-866-999-HALT (1-866-999-4158).

LICENSE FOR FOREIGN FILING UNDER

Title 35, United States Code, Section 184

Title 37, Code of Federal Regulations, 5.11 & 5.15

GRANTED

The applicant has been granted a license under 35 U.S.C. 184, if the phrase "IF REQUIRED, FOREIGN FILING LICENSE GRANTED" followed by a date appears on this form. Such licenses are issued in all applications where the conditions for issuance of a license have been met, regardless of whether or not a license may be required as set forth in 37 CFR 5.15. The scope and limitations of this license are set forth in 37 CFR 5.15(a) unless an earlier license has been issued under 37 CFR 5.15(b). The license is subject to revocation upon written notification. The date indicated is the effective date of the license, unless an earlier license of similar scope has been granted under 37 CFR 5.13 or 5.14.

This license is to be retained by the licensee and may be used at any time on or after the effective date thereof unless it is revoked. This license is automatically transferred to any related applications(s) filed under 37 CFR 1.53(d). This license is not retroactive.

The grant of a license does not in any way lessen the responsibility of a licensee for the security of the subject matter as imposed by any Government contract or the provisions of existing laws relating to espionage and the national security or the export of technical data. Licensees should apprise themselves of current regulations especially with respect to certain countries, of other agencies, particularly the Office of Defense Trade Controls, Department of State (with respect to Arms, Munitions and Implements of War (22 CFR 121-128)); the Bureau of Industry and Security, Department of Commerce (15 CFR parts 730-774); the Office of Foreign AssetsControl, Department of Treasury (31 CFR Parts 500+) and the Department of Energy.

NOT GRANTED

No license under 35 U.S.C. 184 has been granted at this time, if the phrase "IF REQUIRED, FOREIGN FILING LICENSE GRANTED" DOES NOT appear on this form. Applicant may still petition for a license under 37 CFR 5.12, if a license is desired before the expiration of 6 months from the filing date of the application. If 6 months has lapsed from the filing date of this application and the licensee has not received any indication of a secrecy order under 35 U.S.C. 181, the licensee may foreign file the application pursuant to 37 CFR 5.15(b).

UNITED STATES PATENT AND TRADEMARK OFFICE

Commissioner for Patents
United States Patent and Trademark Office
P.O. Box 1450
Alexandria, VA 22313-1450
www.uspto.gov

DAVID NEWMAN CHARTERED
P.O. BOX 956
INDIAN HEAD MD 20640

COPY MAILED

MAY 2 5 2007

OFFICE OF PETITIONS

In re Application of

BARAN, Paul et al.
Application No. 11/141,693
Filed: May 31, 2005
Attorney Docket No. **GBTV08US**

DECISION ON PETITION
TO WITHDRAW
FROM RECORD

This is a decision on the Request to Withdraw as attorney or agent of record under 37 C.F.R. § 1.36(b), filed January 30, 2007.

The request is **NOT APPROVED.**

A grantable request to withdraw as attorney/agent of record must be signed by every attorney/agent seeking to withdraw or contain a clear indication that one attorney is signing on behalf of another/others. A request to withdraw will not be approved unless at least 30 (thirty) days would remain between the date of approval and the later of the expiration date of a time to file a response or the expiration date of the maximum time period which can be extended under 37 C.F.R. § 1.136(a).

In order to request or take action in a patent matter, the assignee must establish its ownership of the patent to the satisfaction of the Director. In this regard, a Statement under 37 CFR 3.73(b) must have either: (i) documentary evidence of a chain of title from the original owner to the assignee (*e.g.*, copy of an executed assignment), and a statement affirming that the documentary evidence of the chain of title from the original owner to the assignee was or concurrently is being submitted for recordation pursuant to § 3.11; or (ii) a statement specifying where documentary evidence of a chain of title from the original owner to the assignee is recorded in the assignment records of the Office (*e.g.*, reel and frame number).

All future communications from the Office will continue to be directed to the above-listed address until otherwise notified by applicant.

Telephone inquiries concerning this decision should be directed to Tredelle Jackson at 571-272- 2783.

Monica A. Graves
Petitions Examiner
Office of Petitions

cc: **DAVID BARAN**
GOBACKTV, INC.
937 HAMILTON AVENUE
MENLO PARK, CA 94025

UNITED STATES PATENT AND TRADEMARK OFFICE

UNITED STATES DEPARTMENT OF COMMERCE
United States Patent and Trademark Office
Address: COMMISSIONER FOR PATENTS
P.O. Box 1450
Alexandria, Virginia 22313-1450
www.uspto.gov

KATTEN MUCHIN ROSENMAN LLP
575 MADISON AVENUE
NEW YORK, NY 10022-2585

Mail Date: 04/21/2010

Applicant	: Nobuo Sasaki	: DECISION ON REQUEST FOR
Patent Number	: 7644234	: RECALCULATION of PATENT
Issue Date	: 01/05/2010	: TERM ADJUSTMENT IN VIEW
Appliction No	: 11/141,700	: OF WYETH AND NOTICE OF INTENT TO
Filed	: 05/31/2005	: ISSUE CERTIFICATE OF CORRECTION
		:

The Request for Recalculation is **GRANTED** to the extent indicated.

The patent term adjustment has been determined to be **1093** days. The USPTO will *sua sponte* issue a certificate of correction reflecting the amount of PTA days determined by the recalculation.

Prior to the issuance of the certificate of correction, the USPTO will afford patentee an opportunity to be heard and request reconsideration. Accordingly, patentee has **one month or thirty (30) days**, whichever is longer, to file a request for reconsideration of this patent term adjustment calculation. See 35 U.S.C. 154(b)(3)(B)(ii) and 37 CFR 1.322(a)(4). No extensions of time will be granted under 37 CFR 1.136.

Patentee should use document code PET.OP if electronically filing a request for reconsideration of this patent term adjustment calculation. The patentee must also include the information required by 37 CFR 1.705(b)(2) and the fee required by 37 CFR 1.18(e). If patentee does not file a timely request for reconsideration of this patent term adjustment calculation including the information required by 37 CFR 1.705(b)(2) and the fee required by 37 CFR 1.18(e), the USPTO will issue a certificate of correction reflecting the PTA determination noted above.

Patentee should be aware that in order to preserve the right to review in the United States District Court for the District of Columbia of the USPTO patent term adjustment determination, patentee must ensure that he or she also take the steps required under 35 U.S.C. 154(b)(4)(A) in a timely manner. Nothing in the request for recalculation should be construed as providing an alternative time frame for commencing a civil action under 35 U.S.C. 154(b)(4)(A).

Any questions concerning this decision should be directed to the Office of Patent Legal Administration at 571-272-7702.

UNITED STATES PATENT AND TRADEMARK OFFICE

UNITED STATES DEPARTMENT OF COMMERCE
United States Patent and Trademark Office
Address: COMMISSIONER FOR PATENTS
P.O. Box 1450
Alexandria, Virginia 22313-1450
www.uspto.gov

KATTEN MUCHIN ROSENMAN LLP
575 MADISON AVENUE
NEW YORK, NY 10022-2585

Mail Date: 05/18/2010

Applicant : Nobuo Sasaki
Patent Number : 7644234
Issue Date : 01/05/2010
Application No: 11/141,700
Filed : 05/31/2005

: NOTICE CONCERNING IMPROPER
: CALCULATION OF PATENT TERM
: ADJUSTMENT BASED UPON USPTO
: IMPROPERLY MEASURING REDUCTION
: PERIOD UNDER 37 CFR 1.704(c)(10).

The United States Patent and Trademark Office (USPTO) discovered that in processing the recent recalculation decisions mailed in response to patentee's filed Request for Recalculation of Patent Term Adjustment in view of Wyeth, the USPTO improperly measured the reduction period for reductions under 37 CFR 1.704(c)(10). Pursuant to 37 CFR 1.704(c)(10), patentee's reduction begins on the date of filing the amendment under 37 CFR 1.312 ("1.312 amendment") or other related paper and ends on the date that the Office mails a response to the filing of the 1.312 amendment or other paper. It has been discovered that during the recalculation, the calculation failed to the limit the reduction to the mail date of the response to the 1.312 amendment or other paper. Accordingly, patentee's reductions were greater than warranted.

This notice **VACATES** the previous GRANTED request for recalculation and provides patentee with a revised GRANTED recalculation.

The patent term adjustment has been determined to be **1128** days. The USPTO will *sua sponte* issue a certificate of correction reflecting the amount of patent term adjustment (PTA) days determined by the recalculation.

Prior to the issuance of the certificate of correction, the USPTO will afford patentee an opportunity to be heard and request reconsideration. Accordingly, patentee has **one month or thirty (30) days** from the mail date of this notice, whichever is longer, to file a request for reconsideration of this PTA calculation. See 35 U.S.C. § 154(b)(3)(B)(ii) and 37 CFR 1.322(a)(4).

Patentee should use document code PET.OP if electronically filing a request for reconsideration of this PTA calculation. The patentee must also include the information required by 37 CFR 1.705(b)(2), and the fee required by 37 CFR 1.18(e). If patentee does not file a timely request for reconsideration of this PTA calculation, including the information required by 37 CFR 1.705(b)(2) and the fee required by 37 CFR 1.18(e), the USPTO will issue a certificate of correction reflecting the PTA determination noted above.

Patentee should be aware that in order to preserve the right of review of the USPTO's PTA determination in the United States District Court for the District of Columbia, patentee must ensure that the steps required under 35 U.S.C. § 154 (b)(4) are taken in a timely manner. Nothing in the request for recalculation should be construed as providing an alternative time frame for commencing a civil action under 35 U.S.C. § 154(b)(4).

UNITED STATES PATENT AND TRADEMARK OFFICE

Commissioner for Patents
United States Patent and Trademark Office
P.O. Box 1450
Alexandria, VA 22313-1450
www.uspto.gov

FREDERIC FARINA
1659 S. HOBART BLVD.
LOS ANGELES, CA 90006

COPY MAILED

JAN 1 0 2006

OFFICE OF PETITIONS

In re Application of	:	
Wallace, Robert D.	:	
Application No. 11/141,718	:	ON PETITION
Filed: May 31, 2005	:	
Title: GOLF CLUB	:	

This is a decision on the petition under 37 CFR 1.102(c)(1), filed May 31, 2005, to make the above-identified application special based on applicant's age as set forth in M.P.E.P. § 708.02, Section IV.

The petition is **GRANTED**.

A grantable petition to make an application special under 37 CFR 1.102(c)(1) and MPEP § 708.02, Section IV: Applicant's Age must be accompanied by evidence showing that at least one of the applicants is 65 years of age, or more, such as a birth certificate or a statement by applicant. No fee is required.

The instant petition includes a statement from the applicant, as well as a copy of the applicant's driver's license. Accordingly, the above-identified application has been accorded "special" status.

Telephone inquiries concerning this decision should be directed to Petitions Examiner Liana Chase at 571-272-3206.

All other inquiries concerning either the examination or status of the application should be directed to the Technology Center.

This matter is being referred to the Technology Center Art Unit 3711 for action on the merits commensurate with this decision.

Denise Pothier for
David Bucci
Petitions Examiner
Office of Petitions

UNITED STATES PATENT AND TRADEMARK OFFICE

Commissioner for Patents
United States Patent and Trademark Office
P.O. Box 1450
Alexandria, VA 22313-1450
www.uspto.gov

COPY MAILED

AUG 06 2009

OFFICE OF PETITIONS

ZUBER & TAILLIEU LLP
10866 WISHIRE BLVD., SUITE 300
LOS ANGELES, CA 90024

In re Application of	:	
Tim Terrio	:	
Application No. 11/141,719	:	DECISION ON PETITION
Filed: June 1, 2005	:	TO WITHDRAW
Attorney Docket No. 0430-1001	:	FROM RECORD
	:	

This is a decision on the Request to Withdraw as attorney or agent of record under 37 CFR. § 1.36(b), filed June 16, 2009.

The request is **NOT APPROVED** as moot.

A review of the file record indicates that the power of attorney to attorneys/agents associated with Customer Number 73276 has been revoked by the assignee of the patent application on March 14, 2009. Accordingly, the request to withdraw under 37 CFR § 1.36(b) is moot.

All future communications from the Office will continue to be directed to the below-listed address until otherwise notified by applicant.

Telephone inquires concerning this decision should be directed to JoAnne Burke at 571-272-4584.

JoAnne Burke
Petitions Examiner
Office of Petitions

cc: DENNIS W. BEECH (LAW OFFICE OF DENNIS W. BEECH)
P.O. BOX 519
MURRIETA CA 92564-0519

UNITED STATES PATENT AND TRADEMARK OFFICE

Commissioner for Patents
United States Patent and Trademark Office
P.O. Box 1450
Alexandria, VA 22313-1450
www.uspto.gov

**TOWNSEND AND TOWNSEND
AND CREW, LLP
TWO EMBARCADERO CENTER
EIGHTH FLOOR
SAN FRANCISCO, CA 94111-3834**

COPY MAILED

FEB 2 0 2008

OFFICE OF PETITIONS

In re Application of	:	
Robert WENZ	:	
Application No. 11/141,769	:	DECISION ON PETITION
Filed: May 31, 2006	:	TO WITHDRAW
Attorney Docket No. 019433-000810US	:	FROM RECORD
	:	

This is a decision on the Request to Withdraw as attorney or agent of record under 37 C.F.R. § 1.36(b), filed November 16, 2007.

The request is **APPROVED**.

A grantable request to withdraw as attorney/agent of record must be signed by every attorney/agent seeking to withdraw or contain a clear indication that one attorney is signing on behalf of another/others. A request to withdraw will not be approved unless at least 30 (thirty) days would remain between the date of approval and the later of the expiration date of a time to file a response or the expiration date of the maximum time period which can be extended under 37 C.F.R. § 1.136(a).

The request was signed by Mark D. Barrish on behalf of all attorneys/agents of record associated with Customer Number 20350.

All attorneys/agents of record associated with Customer Number 20350 have been withdrawn.

Applicant is reminded that there is no attorney of record at this time.

The request to change the correspondence of record is not acceptable as the requested correspondence address is not that of: (1) the first named signing inventor; or (2) an intervening assignee of the entire interest under 37 C.F.R 3.71. All future communications from the Office will be directed to the inventor at the first copied address below until otherwise properly notified by the applicant.

In order to request or take action in a patent matter, the assignee must establish its ownership of the patent to the satisfaction of the Director. In this regard, a Statement under 37 CFR 3.73(b) must have either: (i) documentary evidence of a chain of title from the original owner to the assignee (*e.g.*, copy of an executed assignment), and a statement affirming that the documentary evidence of the chain of title from the original owner to the assignee was or concurrently is being submitted for recordation pursuant to § 3.11; or (ii) a statement specifying where documentary evidence of a chain of title from the original owner to the assignee is recorded in the assignment records of the Office (*e.g.*, reel and frame number).

There are no outstanding Office actions pending at the present time.

Telephone inquiries concerning this decision should be directed to the undersigned at 571-272-6735.

Diane Goodwyn
Petitions Examiner
Office of Petitions

cc: ROBERT WENZ
FRANKFURTER STRASSE 11
D-61206 WOLLSTADT
GERMANY

JEFFREY S. ABEL
LARSON NEWMAN ABEL
POLANSKY & WHITE LLP
5914 WEST COURTYARD DRIVE
SUITE 200
AUSTIN, TX 78730

UNITED STATES PATENT AND TRADEMARK OFFICE

UNITED STATES DEPARTMENT OF COMMERCE
United States Patent and Trademark Office
Address: COMMISSIONER FOR PATENTS
P.O. Box 1450
Alexandria, Virginia 22313-1450
www.uspto.gov

APPLICATION NUMBER	FILING OR 371(C) DATE	FIRST NAMED APPLICANT	ATTY. DOCKET NO./TITLE
11/141,769	05/31/2005	Robert Wenz	019433-000810US

CONFIRMATION NO. 6025

POWER OF ATTORNEY NOTICE

20350
TOWNSEND AND TOWNSEND AND CREW, LLP
TWO EMBARCADERO CENTER
EIGHTH FLOOR
SAN FRANCISCO, CA 94111-3834

OC000000028386989

Date Mailed: 02/20/2008

NOTICE REGARDING CHANGE OF POWER OF ATTORNEY

This is in response to the Power of Attorney filed 11/16/2007.

- The withdrawal as attorney in this application has been accepted. Future correspondence will be mailed to the new address of record. 37 CFR 1.33.

/dcgoodwyn/

Office of Initial Patent Examination (571) 272-4000 or 1-800-PTO-9199

UNITED STATES PATENT AND TRADEMARK OFFICE

Commissioner for Patents
United States Patent and Trademark Office
P.O. Box 1450
Alexandria, VA 22313-1450
www.uspto.gov

PERKINS COIE LLP
P.O. BOX 1208
SEATTLE, WA 98111-1208

MAILED

MAY 04 2009

OFFICE OF PETITIONS

In re Application of	:	
Zhiliang ZHENG	:	
Application No. 11/141,781	:	DECISION ON PETITION
Filed: May 31, 2005	:	TO WITHDRAW
Attorney Docket No. 58752-8006.US01	:	FROM RECORD
	:	

This is a decision on the Request to Withdraw as attorney or agent of record under 37 C.F.R. § 1.36(b), filed April 16, 2009.

The request is **APPROVED**.

A grantable request to withdraw as attorney/agent of record must be signed by every attorney/agent seeking to withdraw or contain a clear indication that one attorney is signing on behalf of another/others. The Office requires the practitioner(s) requesting withdrawal to certify that he, she, or they have: (1) given reasonable notice to the client, prior to the expiration of the response period, that the practitioner(s) intends to withdraw from employment; (2) delivered to the client or a duly authorized representative of the client all papers and property (including funds) to which the client is entitled; and (3) notified the client of any responses that may be due and the time frame within which the client must respond, pursuant 37 CFR 10.40(c).

The request was signed by William F. Ahmann on behalf of the attorneys of record associated with Customer No. 22918.

The attorneys of record associated with Customer No. 22918 have been withdrawn.

Applicant is reminded that there is no attorney of record at this time.

The correspondence address of record has been changed and the new correspondence address is the address indicated below until otherwise properly notified by the applicant.

In order to request or take action in a patent matter, the assignee must establish its ownership of the patent to the satisfaction of the Director. In this regard, a Statement under 37 CFR 3.73(b) must have either: (i) documentary evidence of a chain of title from the original owner to the assignee (*e.g.*, copy of an executed assignment), and a statement affirming that the documentary evidence of the chain of title from the original owner to the assignee was or concurrently is being submitted for recordation pursuant to § 3.11; or (ii) a statement specifying where documentary evidence of a

chain of title from the original owner to the assignee is recorded in the assignment records of the Office (*e.g.*, reel and frame number).

Telephone inquiries concerning this decision should be directed to the undersigned at 571-272-6735.

Diane Goodwyn
Petitions Examiner
Office of Petitions

cc: ZHILIANG ZHENG
P.O. BOX 60576
SUNNYVALE, CA 94088

UNITED STATES PATENT AND TRADEMARK OFFICE

UNITED STATES DEPARTMENT OF COMMERCE
United States Patent and Trademark Office
Address: COMMISSIONER FOR PATENTS
P.O. Box 1450
Alexandria, Virginia 22313-1450
www.uspto.gov

FISH & RICHARDSON P.C.
P.O. BOX 1022
MINNEAPOLIS, MN 55440-1022

Mail Date: 04/20/2010

Applicant	: Cheng Shine Hwang	: DECISION ON REQUEST FOR
Patent Number	: 7618956	: RECALCULATION of PATENT
Issue Date	: 11/17/2009	: TERM ADJUSTMENT IN VIEW
Appliction No	: 11/141,798	: OF WYETH AND NOTICE OF INTENT TO
Filed	: 05/31/2005	: ISSUE CERTIFICATE OF CORRECTION
		:

The Request for Recalculation is **GRANTED** to the extent indicated.

The patent term adjustment has been determined to be **984** days. The USPTO will *sua sponte* issue a certificate of correction reflecting the amount of PTA days determined by the recalculation.

Prior to the issuance of the certificate of correction, the USPTO will afford patentee an opportunity to be heard and request reconsideration. Accordingly, patentee has **one month or thirty (30) days**, whichever is longer, to file a request for reconsideration of this patent term adjustment calculation. See 35 U.S.C. 154(b)(3)(B)(ii) and 37 CFR 1.322(a)(4). No extensions of time will be granted under 37 CFR 1.136.

Patentee should use document code PET.OP if electronically filing a request for reconsideration of this patent term adjustment calculation. The patentee must also include the information required by 37 CFR 1.705(b)(2) and the fee required by 37 CFR 1.18(e). If patentee does not file a timely request for reconsideration of this patent term adjustment calculation including the information required by 37 CFR 1.705(b)(2) and the fee required by 37 CFR 1.18(e), the USPTO will issue a certificate of correction reflecting the PTA determination noted above.

Patentee should be aware that in order to preserve the right to review in the United States District Court for the District of Columbia of the USPTO patent term adjustment determination, patentee must ensure that he or she also take the steps required under 35 U.S.C. 154(b)(4)(A) in a timely manner. Nothing in the request for recalculation should be construed as providing an alternative time frame for commencing a civil action under 35 U.S.C. 154(b)(4)(A).

Any questions concerning this decision should be directed to the Office of Patent Legal Administration at 571-272-7702.

UNITED STATES PATENT AND TRADEMARK OFFICE

Commissioner for Patents
United States Patent and Trademark Office
P.O. Box 1450
Alexandria, VA 22313-1450
www.uspto.gov

COPY MAILED

APR 17 2008

OFFICE OF PETITIONS

JERRY RICHARD POTTS
3248 VIA RIBERA
ESCONDIDO CA 92029

In re Application of

PERCI, et al.
Application No. 11/141,805
Filed: May 31, 2005
Attorney Docket No. **799104-1**

DECISION ON PETITION
TO WITHDRAW
FROM RECORD

This is a decision on the Request to Withdraw as attorney or agent of record under 37 C.F.R. § 1.36(b), filed October 29, 2007.

The request is **NOT APPROVED.**

A grantable request to withdraw as attorney/agent of record must be signed by every attorney/agent seeking to withdraw or contain a clear indication that one attorney is signing on behalf of another/others. A request to withdraw will not be approved unless at least 30 (thirty) days would remain between the date of approval and the later of the expiration date of a time to file a response or the expiration date of the maximum time period which can be extended under 37 C.F.R. § 1.136(a).

The Office cannot approve the request at this time since the reasons provided do not meet any of the conditions under the mandatory or permissive categories enumerated in 37 CFR 10.40. Section 10.40 of Title 37 of the Code of Federal Regulation states, "[a] practitioner shall not withdraw from employment in a proceeding before the Office without permission from the Office[.]" More specifically, 37 CFR 10.40 states, "[i]f paragraph (b) of this section is not applicable, a practitioner may not request permission to withdraw in matter pending before the Office unless such request or such withdrawal is" for one the permissive reasons listed in 37 CFR 10.40(c). The reason set forth in the request does not meet any of the conditions set forth in 37 CFR 10.40.

All future communications from the Office will continue to be directed to the above-listed address until otherwise notified by applicant.

Telephone inquiries concerning this decision should be directed to the undersigned at 571-272- 7253.

Monica A. Graves
Petitions Examiner
Office of Petitions

cc: **SHEPPARD, MULLIN, RICHTER & HAMPTON LLP**
333 S. HOPE STREET, 48TH FLOOR
LOS ANGELES, CA 90071-1448

UNITED STATES PATENT AND TRADEMARK OFFICE

Commissioner for Patents
United States Patent and Trademark Office
P.O. Box 1450
Alexandria, VA 22313-1450
www.uspto.gov

JERRY RICHARD POTTS
3248 VIA RIBERA
ESCONDIDO CA 92029

COPY MAILED

MAY 23 2008

In re Application of	:	
PERCIN, et al.	:	
Application No. 11/141,805	:	DECISION ON PETITION
Filed: May 31, 2005	:	TO WITHDRAW
Attorney Docket No. **799104-1**	:	FROM RECORD
	:	

This is a decision on the renewed Request to Withdraw as attorney or agent of record under 37 C.F.R. § 1.36(b), filed April 22, 2008.

The request is **APPROVED.**

A grantable request to withdraw as attorney/agent of record must be signed by every attorney/agent seeking to withdraw or contain a clear indication that one attorney is signing on behalf of another/others. A request to withdraw will not be approved unless at least 30 (thirty) days would remain between the date of approval and the later of the expiration date of a time to file a response or the expiration date of the maximum time period which can be extended under 37 C.F.R. § 1.136(a).

The request was signed by Jerry R. Potts, the sole attorney of record. Jerry R. Potts has been withdrawn as attorney or agent of record. Applicant is reminded that there is no attorney of record at this time.

The request to change the correspondence of record is not acceptable as the requested correspondence address is not that of: (1) the first named signing inventor; or (2) an intervening assignee of the entire interest under 37 C.F.R 3.71. All future communications from the Office will be directed to the first named signing inventor at the first copied address below until otherwise properly notified by the applicant.

There is an outstanding Office action mailed April 4, 2008 that requires a reply from the applicant.

Telephone inquiries concerning this decision should be directed to the undersigned at 571-272-7253.

Monica A. Graves
Petitions Examiner
Office of Petitions

cc: **GOKHAN PERCIN**
120 CARLTON AVENUE, UNIT 12
LOS GATOS, CA 95032

cc: **SHEPPARD MULLIN RICHTER & HAMPTON LLP**
333 SOUTH HOPE STREET, 48TH FLOOR
LOS ANGELES, CA 90071-1448

SPE RESPONSE FOR CERTIFICATE OF CORRECTION

Paper No.: —

DATE : 7/1/08

TO SPE OF : ART UNIT 3764

SUBJECT : Request for Certificate of Correction for Appl. No.: 11/141821 Patent No: 7364555 B1

A response is requested with respect to a request for a certificate of correction.

With respect to the change(s) requested to correct Office and/or Applicant's errors, should the patent read as shown in the certificate of correction attached herewith or the COCIN document(s), in IFW images for the above-identified patented application? No new matter should be introduced, nor should the scope or meaning of the claims be changed.

If the response is for an IFW, within 7 days, please complete and forward the response, to the employee (named below) via scanning into application images, using document code **COCX**.

If the response is for a paper file wrapper, please complete the response and forward the response with the paper file wrapper, to the employee (named below), within 7 days, to:

Certificates of Correction Branch (CofC)
South Tower - 9A22
Palm Location 7580

VIRGINIA TOLBERT
Certificates of Correction Branch
703-308-9390 ext. 113

Thank You For Your Assistance

The request for issuing the above-identified correction(s) is hereby:
Note your decision on the appropriate box.

- ☑ **Approved** — All changes apply.
- ☐ **Approved in Part** — Specify below which changes **do not** apply.
- ☐ **Denied** — State the reasons for denial below.

Comments: _____

SPE

3764
Art Unit

UNITED STATES PATENT AND TRADEMARK OFFICE

Commissioner for Patents
United States Patent and Trademark Office
P.O. Box 1450
Alexandria, VA 22313-1450
www.uspto.gov

F. CHAU & ASSOCIATES, LLC
130 WOODBURY ROAD
WOODBURY, NY 11797

COPY MAILED

FEB 13 2009

OFFICE OF PETITIONS

In re Application of	:	
Jang-Kun **SONG, et al.**	:	
Application No. 11/141,823	:	DECISION GRANTING PETITION
Filed: June 1, 2005	:	UNDER 37 CFR 1.313(c)(2)
Attorney Docket No. **8071-32 DIV(OPP051390US)**	:	

This is a decision on the petition under 37 CFR 1.313(c)(2), filed February 13, 2009, to withdraw the above-identified application from issue after payment of the issue fee.

The petition is **GRANTED**.

The above-identified application is withdrawn from issue for consideration of a submission under 37 CFR 1.114 (request for continued examination). *See* 37 CFR 1.313(c)(2).

Petitioner is advised that the issue fee paid on January 6, 2009 cannot be refunded. If, however, this application is again allowed, petitioner may request that it be applied towards the issue fee required by the new Notice of Allowance.[1]

The petition is not signed by an attorney of record. Nevertheless, in accordance with 37 CFR 1.134, the signature of Mr. Michael F. Morano appearing on the correspondence shall constitute a representation to the United States Patent and Trademark Office that he is authorized to represent the particular party on whose behalf he acts. If Mr. Morano desires to receive future correspondence regarding this file, the appropriate power of attorney documents must be submitted.

Telephone inquiries should be directed to the undersigned at (571) 272-7253.

This application is being referred to Technology Center AU 2871 for processing of the request for continued examination under 37 CFR 1.114 and for consideration of the concurrently filed information disclosure statement.

/Monica A. Graves/
Petitions Examiner, Office of Petitions

---

[1] *The request to apply the issue fee to the new Notice may be satisfied by completing and returning the new Part B – Fee(s) Transmittal Form (along with any balance due at the time of submission). Petitioner is advised that the Issue Fee Transmittal Form* ***must*** *be completed and timely submitted to avoid abandonment of the application.*

UNITED STATES PATENT AND TRADEMARK OFFICE

UNITED STATES DEPARTMENT OF COMMERCE
United States Patent and Trademark Office
Address: COMMISSIONER FOR PATENTS
P.O. Box 1450
Alexandria, Virginia 22313-1450
www.uspto.gov

BROOKS KUSHMAN P.C. /Oracle America/ SUN / STK
1000 TOWN CENTER, TWENTY-SECOND FLOOR
SOUTHFIELD, MI 48075-1238

Mail Date: 07/26/2010

Applicant	: Rodney Burgess	: DECISION ON REQUEST FOR
Patent Number	: 7650677	: RECALCULATION of PATENT
Issue Date	: 01/26/2010	: TERM ADJUSTMENT IN VIEW
Application No	: 11/141,826	: OF WYETH AND NOTICE OF INTENT TO
Filed	: 06/01/2005	: ISSUE CERTIFICATE OF CORRECTION
		:

The Request for Recalculation is **GRANTED** to the extent indicated.

The patent term adjustment has been determined to be **1274** days. The USPTO will *sua sponte* issue a certificate of correction reflecting the amount of PTA days determined by the recalculation.

Prior to the issuance of the certificate of correction, the USPTO will afford patentee an opportunity to be heard and request reconsideration. Accordingly, patentee has **one month or thirty (30) days**, whichever is longer, to file a request for reconsideration of this patent term adjustment calculation. See 35 U.S.C. 154(b)(3)(B)(ii) and 37 CFR 1.322(a)(4). No extensions of time will be granted under 37 CFR 1.136.

Patentee should use document code PET.OP if electronically filing a request for reconsideration of this patent term adjustment calculation. The patentee must also include the information required by 37 CFR 1.705(b)(2) and the fee required by 37 CFR 1.18(e). If patentee does not file a timely request for reconsideration of this patent term adjustment calculation including the information required by 37 CFR 1.705(b)(2) and the fee required by 37 CFR 1.18(e), the USPTO will issue a certificate of correction reflecting the PTA determination noted above.

Patentee should be aware that in order to preserve the right to review in the United States District Court for the District of Columbia of the USPTO patent term adjustment determination, patentee must ensure that he or she also take the steps required under 35 U.S.C. 154(b)(4)(A) in a timely manner. Nothing in the request for recalculation should be construed as providing an alternative time frame for commencing a civil action under 35 U.S.C. 154(b)(4)(A).

Any questions concerning this decision should be directed to the Office of Patent Legal Administration at 571-272-7702.

UNITED STATES PATENT AND TRADEMARK OFFICE

Commissioner for Patents
United States Patent and Trademark Office
P.O. Box 1450
Alexandria, VA 22313-1450
www.uspto.gov

Date : March 19, 2009

Patent No. :7492697
Inventor(s) :Tsuyoshi Yamamoto, et al.
Issued :February 17, 2009
Title :OPTICAL DISC RECORDING METHOD AND APPARATUS

Re: Request for Certificate of Correction

Consideration has been given your request for the issuance of a certificate of correction for the above-identified patent under the provisions of 37 CFR 1.322 and/or 1.323.

Assignees' names and addresses (assignment data) printed in a patent are based *solely* on information supplied in the appropriate space for identifying the assignment data, i.e., item 3 of the Fee(s) Transmittal Form PTOL-85B. After payment of the issue fee, correction of assignment data submitted on the PTOL-85B can only be done by Certificate of Correction under 37 CFR 1.323, with a request under 37 CFR 3.81(b).

A request for a patent to be corrected to state the name of the assignee must:

A. state that the assignment was submitted for recordation as set forth in 37 CFR 3.11 before issuance of the patent;

B. include a request for a certificate of correction under 37 CFR 1.323 along with the fee set forth in 37 CFR 1.20(a); and

C. include the processing fee set forth in 37 CFR 1.17(i).

If the request is granted, Certificates of Correction Branch will be notified that a Certificate of Correction may be issued.

See Manual of Patent Examining Procedure, Section 1481.01 (Rev. 3) (Oct. 2005).

Applicant has not included items A and or C above, accordingly, the request for Certificate of Correction to add or change the assignee data is dismissed.

Any request under 37 CFR 3.81(b) should be directed to the following address or facsimile number:

By mail: Mail Stop PETITIONS
Commissioner for Patents
Post Office Box 1450
Alexandria, VA 22313-1450

By hand:	Customer Service Window Randolph Building 401 Dulany Street Alexandria, VA 22314
By fax:	571-273-8300 ATTN: Office of Petitions
EFS web	uspto.gov/ebc/index.html (must be registered as an e-filer to submit responses) Technical Support 1-866-217-9197

Any inquiry concerning this communication should be directed to Ms. A. Green at (703) 308-9380 ext. 123.

A Green

Mary Diggs, Supervisor
Decisions & Certificates
of Correction Branch
(703) 308-9390 or (703) 308-9390 Ext. 123

Pillsbury Winthrop Shaw Pittman LLP
725 South Figueroa St.,
Ste 2800
Los Angeles, CA 90017-5406

/arg

UNITED STATES PATENT AND TRADEMARK OFFICE

COMMISSIONER FOR PATENTS
UNITED STATES PATENT AND TRADEMARK OFFICE
P.O. BOX 1450
ALEXANDRIA, VA 22313-1450
www.uspto.gov

PILLSBURY WINTHROP
SHAW PITTMAN LLP
P.O BOX 10500
McLean VA 22102

COPY MAILED

DEC 2 2 2009

OFFICE OF PETITIONS

In re Patent No. 7,492,697	:	
Issue Date: 17 February, 2009	:	
Application No. 11/141,833	:	ON PETITION
Filed: 1 June, 2005	:	
Attorney Docket No. 081448-0316329	:	

This is a decision on the petition filed on 15 June, 2009, treated as a request under 37 C.F.R. §3.81(b)[1] and §1.323 to correct the name of the assignee on the front page of the above-identified patent by way of a Certificate of Correction.

The petition is **GRANTED**.

Petitioner requests issuance of a certificate of correction to add the name of "Kabushiki Kaisha Toshiba."

The regulations at 37 C.F.R. §3.81(a) permits the patent to issue to the assignee, provided that, at the time the issue fee is paid, the name of an assignee is provided. The regulations at 37 C.F.R. §3.81 (b) permits the patent to issue in the name of an assignee if the assignment was submitted after payment of the issue fee but prior to issuance of a patent.

Patent and Trademark Office assignment records disclose that an assignment to Kabushiki Kaisha Toshiba. was recorded on 1 June, 2005, at Reel/Frame 016923/0957. Thereafter the patent issued, as indicated above, on 17 February, 2009. (*See*, generally in this regard: MPEP §307.)

Petitioner states that the correct assignee's name is Development Techniques Plastiques Holding (D.T.P. Holding). and that the incorrect assignee's name was included on the Fee(s) Transmittal form PTOL-85(b) at the time of payment of the issue fee.

[1] *See* MPEP 1309, subsection II; and Official Gazette of June 22, 2004.

Accordingly, petitioner requests that a certificate of correction be issued to reflect the correct assignee on the front page of the Letters Patent in the patent to be issued from the application.

The guidance in the Commentary at MPEP §307 provides:

> **307Issue to Assignee [R-3]**
>
> *35 U.S.C. §152. Issue of patent to assignee.*
>
> Patents may be granted to the assignee of the inventor of record in the Patent and Trademark Office, upon the application made and the specification sworn to by the inventor, except as otherwise provided in this title.
>
> **>
>
> *37 C.F.R. §3.81. Issue of patent to assignee.*
>
> (a)*With payment of the issue fee*: An application may issue in the name of the assignee consistent with the application's assignment where a request for such issuance is submitted with payment of the issue fee, provided the assignment has been previously recorded in the Office. If the assignment has not been previously recorded, the request must state that the document has been filed for recordation as set forth in §3.11.
>
> (b)*After payment of the issue fee*: Any request for issuance of an application in the name of the assignee submitted after the date of payment of the issue fee, and any request for a patent to be corrected to state the name of the assignee, must state that the assignment was submitted for recordation as set forth in § 3.11before issuance of the patent, and must include a request for a certificate of correction under §1.323 of this chapter (accompanied by the fee set forth in § 1.20(a)) and the processing fee set forth in §1.17 (i) of this chapter.
>
> (c)*Partial assignees*. (1) If one or more assignee, together with one or more inventor, holds the entire right, title, and interest in the application, the patent may issue in the names of the assignee and the inventor.
>
> (2)If multiple assignees hold the entire right, title, and interest to the exclusion of all the inventors, the patent may issue in the names of the multiple assignees.<
>
> Normally, for a patent to issue to an assignee, a request for issuance of the application in the name* of the assignee* must be filed in the United States Patent and Trademark Office (Office) at a date not later than the day on which the issue fee is paid. **>Such a request must indicate that the assignment has been previously recorded in the Office. If the assignment has not been previously recorded in the Office, the request must state that the document has been filed for recordation as set forth in 37 C.F.R. §3.11. See 37 C.F.R. §3.81(a).

If a request for issuance to an assignee pursuant to 37 C.F.R. §3.81(b) is submitted after the day on which the issue fee is paid, the request under 37 C.F.R. §3.81(b) must include a request for a certificate of correction under 37 C.F.R. §1.323 (accompanied by the fee set forth in 37 C.F.R. §1.20(a)) and the processing fee set forth in 37 C.F.R. §1.17(i). The request under 37 C.F.R. §3.81(b) must state that the assignment was submitted for recordation as set forth in 37 C.F.R. §3.11 before issuance of the patent. The Office will issue a certificate of correction to reflect that the patent issued to the assignee provided the requirements of 37 C.F.R. §3.81(b) and 37 C.F.Rz. §1.323 are complied with.<

Only the first appearing name of an assignee will be printed on the patent where multiple names for the same party are identified on the **>Fee(s)< Transmittal form, PTOL-85B. Such multiple names may occur when both a legal name and an "also known as" or "doing business as" name is also included. This printing practice will not, however, affect the existing practice of recording assignments with the Office in the Assignment Division. The assignee entry on form PTOL-85B should still be completed to indicate the assignment data as recorded in the Office. For example, the assignment filed in the Office and, therefore, the PTOL-85B assignee entry might read "Smith Company doing business as (d.b.a.) Jones Company." The assignee entry on the printed patent will read "Smith Company."

Irrespective of whether the assignee participates in the prosecution of the application, the patent issues to the assignee if so indicated on the **>Fee(s)< Transmittal form PTOL-85B. Unless an assignee's name and address are identified Transmittal form PTOL-the applicant. Assignment will be based solely on >Assignment information updated after a patent is reflective of the assignment subsequent to the issuance assignment information an assignment search on and by inspecting the documents.<

A request for a certificate 37 CFR 1.323 (see MPEP from incomplete or erroneous furnished >, or a missing PTOL-85B will not be under 37 CFR 3.81(b) assignment was submitted in 37 CFR 3.11 before request under 37 CFR the Office of Petitions

(A)the *>processing< 1.17(*>i<);
(B)a request **>for the name of the assignee, corrected to state the name
(C)a statement that submitted for recordation 3.11before the issuance of the
(D)a **>request under 37 CFR 1.323 accompanied in 37 CFR 1.20(a).<

The regulations at 37 C.F.R. §3.81(b), effective June 25, 2004, provide:

After payment of the issue fee: Any request for issuance of an application in the name of the assignee submitted after the date of payment of the issue fee,

> and any request for a patent to be corrected to state the name of the assignee, must state that the assignment was submitted for recordation as set forth in § 3.11 before issuance of the patent, and must include a request for a certificate of correction under § 1.323 of this chapter (accompanied by the fee set forth in .§1.20(a) and the processing fee set forth in §1.17(i) of this chapter.

The request was accompanied by a certificate of correction (and fee) as required by 3.81(b). Further, Office assignment records reflect assignment as set forth above.

Out of an abundance of caution, Petitioners always are reminded that those registered to practice and all others who make representations before the Office are reminded to inquire into the underlying facts of representations made to the Office and support averments with the appropriate documentation–since all owe to the Office the continuing duty to disclose.[2]

The availability of applications and application papers online to applicants/practitioners who diligently associate their Customer Number with the respective application(s) now provides an applicant/practitioner on-demand information as to events/transactions in an application.

Accordingly, because the request complies with the provisions of 37 C.F.R. 3.81(b), it is appropriate for a certificate of correction to be processed.

This matter is being referred to the Certificates of Correction Branch for processing of a certificate of correction after issuance of this application into a patent.

---

[2] See supplement of 17 June, 1999. The Patent and Trademark Office is relying on Petitioner's duty of candor and good faith and accepting a statement made by Petitioner. See Changes to Patent Practice and Procedure, 62 Fed. Reg. at 53160 and 53178, 1203 Off. Gaz. Pat. Office at 88 and 103 (responses to comments 64 and 109)(applicant obligated under 37 C.F.R. §10.18 to inquire into the underlying facts and circumstances when providing statements to the Patent and Trademark Office).

Patent No. 7,492,697
Application No. 11/141,833

Telephone inquiries regarding this decision may be directed to the undersigned at (571) 272-3214—it is noted, however, that all practice before the Office is in writing (see: 37 C.F.R. §1.2[3]) and the proper authority for action on any matter in this regard are the statutes (35 U.S.C.), regulations (37 C.F.R.) and the commentary on policy (MPEP). Therefore, no telephone discussion may be controlling or considered authority for Petitioner's action(s).

Any questions concerning the issuance of a certificate of correction should be directed to the Certificates of Correction Branch at (571) 272-4200.

/John J. Gillon, Jr./
John J. Gillon, Jr.
Senior Attorney
Office of Petitions

[3] The regulations at 37 C.F.R. §1.2 provide:
§1.2 Business to be transacted in writing.
All business with the Patent and Trademark Office should be transacted in writing. The personal attendance of applicants or their attorneys or agents at the Patent and Trademark Office is unnecessary. The action of the Patent and Trademark Office will be based exclusively on the written record in the Office. No attention will be paid to any alleged oral promise, stipulation, or understanding in relation to which there is disagreement or doubt.

UNITED STATES PATENT AND TRADEMARK OFFICE

Commissioner for Patents
United States Patent and Trademark Office
P.O. Box 1450
Alexandria, VA 22313-1450
www.uspto.gov

BLAKELY SOKOLOFF TAYLOR & ZAFMAN LLP
1279 OAKMEAD PARKWAY
SUNNYVALE, CA 94085-4040

COPY MAILED

DEC 22 2008

OFFICE OF PETITIONS

In re Application of :
Ran Oz et al :
Application No. 11/141,848 :
Filed: May 31, 2005 :
Attorney Docket No. 5079P035 :

ON PETITION

This is a decision on the petition under 37 CFR 1.137(b), filed November 19, 2008, to revive the above-identified application.

The petition is **GRANTED**.

The above-identified application became abandoned for failure to reply in a timely manner to the non-final Office action mailed March 19, 2008, which set a shortened statutory period for reply of three (3) months. No extension of time under the provisions of 37 CFR 1.136(a) were obtained. Accordingly, the above-identified application became abandoned on June 20, 2008.

The file does not indicate a change of address has been submitted, although the address given on the petition differs from the address of record. If appropriate, a change of address should be filed in accordance with MPEP 601.03. A courtesy copy of this decision is being mailed to the address given on the petition; however, the Office will mail all future correspondence solely to the address of record.

Telephone inquiries concerning this decision should be directed to Irvin Dingle at (571) 272-3210.

This matter is being referred to Technology Center AU 2616 for further processing.

Irvin Dingle
Petitions Examiner
Office of Petitions

cc: Oren Reches
Suite 100, 211 North Union Street
Alexandria, VA 22314

UNITED STATES PATENT AND TRADEMARK OFFICE

Commissioner for Patents
United States Patent and Trademark Office
P.O. Box 1450
Alexandria, VA 22313-1450
www.uspto.gov

Paper No.

Mialeeka Williams
Rhodia Inc.
CN 7500, 259 Prospect Plains Road
Cranbury NJ 08512

COPY MAILED

OCT 14 2005

OFFICE OF PETITIONS

In re Application of	:	
Li et al.	:	DECISION ON PETITION
Application No. 11/141,853	:	
Filed: June 1, 2005	:	
Attorney Docket No. RD 04019	:	

This is in response to the "RESPONSE" filed September 9, 2005, which is properly treated as a petition pursuant to 37 C.F.R. 1.53(e)(2). Applicants request that the above-identified nonprovisional application be accorded a filing date of June 1, 2005, with no drawings present in the application.

The petition is **GRANTED**.

Application papers in the above-identified nonprovisional application were deposited on June 1, 2005. However, on July 12, 2005, the Initial Patent Examination Division mailed applicants' a "Notice of Incomplete Nonprovisional Application," stating that the application papers deposited July 1, 2005 had not been accorded a filing date because the application was deposited without drawings.

On September 9, 2005, applicants filed a response. Therein, applicants stated that the "drawings are not necessary under 35 U.S.C. 113 to the prosecution of this application; they are only examples."

RELEVANT STATUTES AND REGULATIONS

35 U.S.C. 111(a)(4) provides that:

> The filing date of an application shall be the date on which the specification and any required drawing are received in the Patent and Trademark Office.

However, as stated in MPEP 601.01(f)

> It has been USPTO practice to treat an application that contains at least one process or method claim as an application for which a drawing is not necessary for an understanding of the invention under 35 U.S.C. 113 (first sentence).

MPEP § 601.01(f) also states that:

> a nonprovisional application having at least one claim ..., directed to subject matter discussed above for which a drawing is usually not considered essential for a filing date, describing drawing figure(s) in the specification, but filed without drawings will be treated as an application without all of the drawing figures referred to in the specification as discussed in MPEP § 601.01(g), so long as the application contains something that can be construed as a written description.

DISCUSSION

A review of the application confirms that as filed on June 1, 2005, the application contained at least one method claim. Pursuant to § 601.01(f), a drawing is not considered essential for a filing date. Thus, the application is entitled to a filing date without drawings present in the application.

To the extent that the Notice denied a filing date, the "Notice of Incomplete Nonprovisional Application" mailed July 12, 2005, was mailed in error and is hereby **withdrawn**.

In view thereof, the application as originally deposited without drawings is entitled to a filing date of June 1, 2005.

Given the basis for granting the petition, the petition fee is subject to refund. Accordingly, although authorized, no petition fee will be charged to petitioner's Deposit Account.

The Office of Initial Patent Examination (OIPE) has been advised of this decision. Pursuant to this decision, the application has been referred to OIPE for:

- **correction of the filing date to July 1, 2005**;
- indication in Office records, as appropriate, that "0" sheets of drawings were present on filing; and
- mailing of a corrected filing receipt.

Telephone inquiries specific to this decision may be directed to the undersigned at (571) 272-3219.

Nancy Johnson
Senior Petitions Attorney
Office of Petitions

UNITED STATES PATENT AND TRADEMARK OFFICE

Commissioner for Patents
United States Patent and Trademark Office
P.O. Box 1450
Alexandria, VA 22313-1450
www.uspto.gov

Paper No.

Mialeeka Williams
Rhodia Inc.
CN 7500, 259 Prospect Plains Road
Cranbury NJ 08512

COPY MAILED

FEB 21 2006

OFFICE OF PETITIONS

In re Application of	:	**CORRECTED**
Li et al.	:	DECISION ON PETITION
Application No. 11/141,853	:	
Filed: June 1, 2005	:	
Attorney Docket No. RD 04019	:	

This is in response to the "RESPONSE" filed September 9, 2005, which is properly treated as a petition pursuant to 37 C.F.R. 1.53(e)(2). Applicants request that the above-identified nonprovisional application be accorded a filing date of June 1, 2005, with no drawings present in the application.

This decision is being mailed to correct an error in the original decision mailed October 14, 2005. Therein, it was stated in error in one instance in the closing of the decision that the filing date was being corrected to July 1, 2005 (not June 1, 2005). It is noted that this was of no consequence in the application as the corrected filing receipt mailed by OIPE stated that the filing date is June 1, 2005.

The petition is **GRANTED**.

Application papers in the above-identified nonprovisional application were deposited on June 1, 2005. However, on July 12, 2005, the Initial Patent Examination Division mailed applicants' a "Notice of Incomplete Nonprovisional Application," stating that the application papers deposited July 1, 2005 had not been accorded a filing date because the application was deposited without drawings.

On September 9, 2005, applicants filed a response. Therein, applicants stated that the "drawings are not necessary under 35 U.S.C. 113 to the prosecution of this application; they are only examples."

RELEVANT STATUTES AND REGULATIONS

35 U.S.C. 111(a)(4) provides that:

> The filing date of an application shall be the date on which the specification and any required drawing are received in the Patent and Trademark Office.

However, as stated in MPEP 601.01(f)

> It has been USPTO practice to treat an application that contains at least one process or method claim as an application for which a drawing is not necessary for an understanding of the invention under 35 U.S.C. 113 (first sentence).

MPEP § 601.01(f) also states that:

> a nonprovisional application having at least one claim ..., directed to subject matter discussed above for which a drawing is usually not considered essential for a filing date, describing drawing figure(s) in the specification, but filed without drawings will be treated as an application without all of the drawing figures referred to in the specification as discussed in MPEP § 601.01(g), so long as the application contains something that can be construed as a written description.

DISCUSSION

A review of the application confirms that as filed on June 1, 2005, the application contained at least one method claim. Pursuant to § 601.01(f), a drawing is not considered essential for a filing date. Thus, the application is entitled to a filing date without drawings present in the application.

To the extent that the Notice denied a filing date, the "Notice of Incomplete Nonprovisional Application" mailed July 12, 2005, was mailed in error and is hereby **withdrawn**.

In view thereof, the application as originally deposited without drawings is entitled to a filing date of June 1, 2005.

Given the basis for granting the petition, the petition fee is subject to refund. Accordingly, although authorized, no petition fee will be charged to petitioner's Deposit Account.

The Office of Initial Patent Examination (OIPE) has been advised of this decision. Pursuant to this decision, the application has been referred to OIPE for:

- **correction of the filing date to June 1, 2005**;
- indication in Office records, as appropriate, that "0" sheets of drawings were present on filing; and
- mailing of a corrected filing receipt.

Telephone inquiries specific to this decision may be directed to the undersigned at (571) 272-3219.

Nancy Johnson
Senior Petitions Attorney
Office of Petitions

UNITED STATES PATENT AND TRADEMARK OFFICE

COMMISSIONER FOR PATENTS
UNITED STATES PATENT AND TRADEMARK OFFICE
P.O. BOX 1450
ALEXANDRIA, VA 22313-1450
WWW.USPTO.GOV

Paper No. None

AT&T CORP.
P.O. BOX 4110
MIDDLETOWN NJ 07748

COPY MAILED

SEP 1 9 2005

OFFICE OF PETITIONS

In re Application of Luis F. Albisu, Cheryl L. Furst, James W. Holloway, Tien Y. Hurr, Jonathan C. Lee, Michael F. Wallace, and Alton W. Drake II Application No. 11/141,862 Filed: June 1, 2005 Attorney Docket Number: 2002-0305 Title: AUTHENTICATION MANAGEMENT PLATFORM FOR MANAGED SECURITY SERVICE PROVIDERS	DECISION ON PETITION UNDER 37 C.F.R. §1.47(a)

This is in response to the petition under 37 C.F.R. §1.47(a)[1], filed August 31, 2005.

On June 1, 2005, the application was deposited, identifying Luis F. Albisu, Cheryl L. Furst, James W. Holloway, Tien Y. Hurr, Jonathan C. Lee, Michael F. Wallace, and Alton W. Drake II as joint inventors. The declaration which was included on filing executed by each of the joint inventors save Me. Lee. On July 1, 2005, a "Notice to File Missing Parts of Nonprovisional Application – Filing Date Granted" (Notice) was mailed, indicating that a fully executed oath or

[1]A grantable petition under 37 C.F.R. §1.47(a) requires:

(1) the petition fee of $130;
(2) a surcharge of either $65 or $130 if the petition is not filed at the time of filing the application, as set forth in 37 CFR § 1.16(e);
(3) a statement of the last known address of the non-signing inventors;
(4) either
  a) proof that a copy of the entire application (specification, claims, drawings, and the oath or declaration) was sent or given to the non-signing inventor for review and proof that the non-signing inventor refuses to join in the application or
  b) proof that the non-signing inventor cannot be found or reached after diligent effort;
(5) a declaration which complies with 37 CFR §1.63.

declaration and the associated surcharge were required, along with replacement drawings. This Notice set a two-month period for reply.

Petitioner has met requirements (1) and (3) – (5) above.

With this petition, Petitioner has included the petition fee, replacement drawings, the last known address of the non-signing inventor, proof that a complete copy of the application was sent to this address, and proof that he has refused to join the application.

However, Petitioner has not supplied the surcharge associated with the late submission of an oath or declaration, as required by the notice of July 1, 2005. It is further noted that Petitioner has not authorized the Office to charge any deficient fees to a Deposit Account.

As such, the petition under 37 C.F.R. §1.47(a) must be **DISMISSED**.

Rule 47 applicant is given **TWO MONTHS** from the mailing date of this decision to reply, correcting the above-noted deficiencies. Any reply should be entitled "Renewed Petition Under 37 C.F.R. §1.47(a)," and should only address the deficiencies noted above, except that the reply may include an oath or declaration executed by the non-signing inventor. **Failure to respond will result in abandonment of the application**. Any extensions of time will be governed by 37 C.F.R. §1.136(a). This is not a final agency action within the meaning of 5 U.S.C 704.

The renewed petition should indicate in a prominent manner that the attorney handling this matter is Paul Shanoski.

Any renewed petition may be submitted by mail[2], hand-delivery[3], or facsimile[4].

Telephone inquiries regarding *this decision* should be directed to the undersigned at (571) 272-3225. All other inquiries concerning examination procedures or status of the application should be directed to the Technology Center.

Paul Shanoski

Paul Shanoski
Senior Attorney
Office of Petitions
United States Patent and Trademark Office

2 Mail Stop Petition, Commissioner for Patents, United States Patent and Trademark Office, P.O. Box 1450, Alexandria, VA, 22313-1450.
3 Customer Window, Randolph Building, 401 Dulaney Street, Alexandria, VA, 22314.
4 571-273-8300.

UNITED STATES PATENT AND TRADEMARK OFFICE

COMMISSIONER FOR PATENTS
UNITED STATES PATENT AND TRADEMARK OFFICE
P.O. BOX 1450
ALEXANDRIA, VA 22313-1450
WWW.USPTO.GOV

Paper No.

AT & T LEGAL DEPARTMENT - WT
PATENT DOCKETING
ROOM 2A-207, ONE AT& T WAY
BEDMINSTER NJ 07921

COPY MAILED
MAR 15 2010

In re Application of Luis F. Albisu, Cheryl L. Furst, James W. Holloway, Tien Y. Hurr, Jonathan C. Lee, Michael F. Wallace, and Alton W. Drake II Application No. 11/141,862 Filed: June 1, 2005 Attorney Docket Number: 2002-0305 Title: AUTHENTICATION MANAGEMENT PLATFORM FOR MANAGED SECURITY SERVICE PROVIDERS	DECISION ON TWO PETITIONS UNDER 37 C.F.R. §§ 1.47(a) AND 1.137(b)

This is in response to the renewed petition pursuant to 37 C.F.R. § 1.47(a), filed March 5, 2010. This is also a decision on the concurrently filed petition pursuant to 37 C.F.R. § 1.137(b).

The petition pursuant to 37 C.F.R. § 1.47(a) is **GRANTED**.

The petition pursuant to 37 C.F.R. § 1.137(b) is **GRANTED**.

On June 1, 2005, the application was deposited, identifying Luis F. Albisu, Cheryl L. Furst, James W. Holloway, Tien Y. Hurr, Jonathan C. Lee, Michael F. Wallace, and Alton W. Drake II as joint inventors. The declaration which was included on filing has been executed by each of the joint inventors save Mr. Lee. On July 1, 2005, a "Notice to File Missing Parts of Nonprovisional Application - Filing Date Granted" (Notice) was mailed, indicating that a fully executed oath or declaration and the associated surcharge were required, along with replacement drawings. This Notice set a two-month period for reply.

An original petition pursuant to 37 C.F.R. § 1.47(a) was filed on August 31, 2005, along with the petition fee, the surcharge associated with the last submission of an oath or declaration, replacement drawings, the last known address of the non-signing inventor, proof that a complete copy of the application was sent to this address, and proof that he has refused to join the application.

A grantable petition pursuant to 37 C.F.R. § 1.47(a) requires:

(1) the petition fee of $200;
(2) a surcharge of either $65 or $130 if the petition is not filed at the time of filing the application, as set forth in 37 C.F.R. § 1.16(f);
(3) a statement of the last known address of the non-signing inventor;
(4) either
  a) proof that a copy of the entire application (specification, claims, drawings, and the oath or declaration) was sent or given to the non-signing inventor for review and proof that the non-signing inventor refuses to join in the application or
  b) proof that the non-signing inventor cannot be found or reached after diligent effort, and;
(5) a declaration which complies with 37 C.F.R. § 1.63.

The original petition pursuant to 37 C.F.R. § 1.47(a) was dismissed via the mailing of a decision on September 19, 2005, which indicated that requirements (1) and (3) - (5) of Rule 1.47(a) had been satisfied, and that the surcharge that is associated with the late submission of oath or declaration had not been received. The decision further expressly indicated that failure to respond to the decision on the original petition would result in the abandonment of the application.[1]

On September 28, 2005, the surcharge that is associated with the late submission of oath or declaration was received. However a response to the decision on the original petition was not received by the Office, and as such, this application went abandoned by operation of law on November 20, 2005, pursuant to 37 C.F.R. § 1.135(a).

---

1 Decision on the original petition, page 2.

A grantable petition pursuant to 37 C.F.R. § 1.137(b) must be accompanied by:

(1) The reply required to the outstanding Office action or notice, unless previously filed;
(2) The petition fee as set forth in 37 C.F.R. § 1.17(m);
(3) A statement that the entire delay in filing the required reply from the due date for the reply until the filing of a grantable petition pursuant to this paragraph was unintentional. The Commissioner may require additional information where there is a question whether the delay was unintentional, and;
(4) Any terminal disclaimer (and fee as set forth in 37 C.F.R. § 1.20(d)) required pursuant to paragraph (d) of this section.

37 C.F.R. § 1.137(b)(3) requires a statement that the entire delay in filing the required reply from the due date for the reply until the filing of a grantable petition pursuant to 37 C.F.R. § 1.137(b) was unintentional. Since the statement contained in this petition varies from the language required by 37 C.F.R. § 1.137(b)(3), the statement contained in this petition is being construed as the statement required by 37 C.F.R. § 1.137(b)(3) and Petitioner must notify the Office if this is not a correct interpretation of the statement contained in this petition.

With this petition, Petitioner has submitted the petition fee along with a statement that is being construed as the proper statement of unintentional delay. The concurrently filed petition pursuant to 37 C.F.R. § 1.47(a) will serve as the required reply.

It is noted that Petitioner has not included a statement of facts from either Wendy W. Koba (the attorney of record at the time of the abandonment of this application) or a representative of the Assignee. Moreover, it is not apparent whether the person signing the statement of unintentional delay was in a position to have firsthand or direct knowledge of the facts and circumstances of the delay at issue. Nevertheless, such statement is being treated as having been made as the result of a reasonable inquiry into the facts and circumstances of such

delay.[2] In the event that such an inquiry has not been made, Petitioner must make such an inquiry. If such inquiry results in the discovery that the delay was intentional, Petitioner must notify the Office.

The first three requirements of Rule 1.137(b) have been met. The fourth requirement of Rule 1.137(b) is not applicable, as a terminal disclaimer is not required.[3]

It follows that the petition pursuant to 37 C.F.R. § 1.137(b) is granted.

Regarding the petition pursuant to 37 C.F.R. § 1.47(a), each of the five requirements have been satisfied. It follows that this petition is granted and this application is hereby accorded Rule 1.47(a) status.

As provided in Rule 1.47(a), this Office will forward notice of this application's filing to the non-signing inventor at the address given in the petition. Notice of the filing of this application will also be published in the Official Gazette.

The Office of Patent Publication will be notified of this decision, and jurisdiction over this application is transferred to the Office of Patent Publication, so that this application can be processed into a patent.

It is noted that the address listed on the petition differs from the address of record. The application file does not indicate a change of correspondence address has been filed in this case, although the address given on the petition differs from the address of record. If Petitioner desires to receive future correspondence regarding this application, the change of correspondence address must be submitted. A courtesy copy of this decision will be mailed to Petitioner. However, all future correspondence will be directed to the address of record until such time as appropriate instructions are received to the contrary. Petitioner will not receive future correspondence related to this application unless Change of Correspondence Address, Patent Form (PTO/SB/122) is submitted for the above-identified application. For Petitioner's convenience, a blank Change of Correspondence Address, Patent Form (PTO/SB/122), may be found at http://www.uspto.gov/web/forms/sb0122.pdf.

---

2 See 37 C.F.R. § 10.18(b); cf. Changes to Patent Practice and Procedure; Final Rule Notice, 62 Fed. Reg. 53131, 53178 (October 10, 1997), 1203 Off. Gaz. Pat. Office 63, 103 (October 21, 1997).
3 See Rule 1.137(d).

Telephone inquiries regarding *this decision* should be directed to Senior Attorney Paul Shanoski at (571) 272-3225.[4] All other inquiries concerning the status of the application should be directed to the Office of Patent Publication at 571-272-4200.

Anthony Knight
Supervisor
Office of Petitions

cc: Kin-Wah Tong
Wall & Tong, LLP
595 Shrewsbury Ave.
Shrewsbury, NJ 07702

---

4 Petitioner will note that all practice before the Office should be in writing, and the action of the Office will be based exclusively on the written record in the Office. See 37 C.F.R. § 1.2. As such, Petitioner is reminded that no telephone discussion may be controlling or considered authority for any further action(s) of Petitioner.

UNITED STATES PATENT AND TRADEMARK OFFICE

Commissioner for Patents
United States Patent and Trademark Office
P.O. Box 1450
Alexandria, VA 22313-1450
www.uspto.gov

Jonathon C. Lee
3918 Maximillian Court
Fairfax, VA 22033

COPY MAILED
MAR 15 2010

In re Application of	:	
Luis F. Albisu, Cheryl L. Furst,	:	
James W. Holloway, Tien Y. Hurr,	:	
Jonathan C. Lee, Michael F.	:	
Wallace, and Alton W. Drake II	:	
Application No. 11/141,862	:	LETTER
Filed: June 1, 2005	:	
Attorney Docket Number: 2002-	:	
0305	:	
Title: AUTHENTICATION MANAGEMENT	:	
PLATFORM FOR MANAGED SECURITY	:	
SERVICE PROVIDERS	:	

Dear Mr. Lee:

You are named as a joint inventor in the above-identified United States patent application filed under the provisions of 35 U.S.C. 116 (United States Code) and 37 CFR 1.47(a), Rules of Practice in Patent Cases. Should a patent be granted on the application you will be designated therein as a joint inventor.

As a named inventor you are entitled to inspect any paper in the file wrapper of the application, order copies of all or any part thereof (at a prepaid cost per 37 CFR 1.19) or make your position of record in the application. Alternatively, you may arrange to do any of the preceding through a registered patent attorney or agent presenting written authorization from you. If you care to join the application, the attorney of record below would presumably assist you. Joining in the application would entail the filing of an appropriate oath or declaration by you pursuant to 37 CFR 1.63.

Telephone inquiries regarding this communication should be directed to the undersigned at (571) 272-3225. Requests for information regarding your application should be directed to the File Information Unit at (703) 308-2733. Information regarding how to pay for and order a copy of the application, or a specific paper in the application, should be directed to the Certification Division at (703) 308-9726 or 1-800-972-6382 (outside the Washington D.C. area).

Anthony Knight
Supervisor
Office of Petitions

cc: AT & T LEGAL DEPARTMENT - WT
PATENT DOCKETING
ROOM 2A-207, ONE AT& T WAY
BEDMINSTER NJ 07921

Kin-Wah Tong
Wall & Tong, LLP
595 Shrewsbury Ave.
Shrewsbury, NJ 07702

SPE RESPONSE FOR CERTIFICATE OF CORRECTION

DATE : 1/14/10 **Paper No.:** —

TO SPE OF : ART UNIT 1614

SUBJECT : Request for Certificate of Correction for Appl. No.: 11/141868 Patent No.: 7622470B2

Please respond to this request for a certificate of correction within 7 days.

FOR IFW FILES:

Please review the requested changes/corrections as shown in the **COCIN** document(s) in the IFW application image. No new matter should be introduced, nor should the scope or meaning of the claims be changed.

Please complete the response (see below) and forward the completed response to scanning using document code **COCX**.

FOR PAPER FILES:

Please review the requested changes/corrections as shown in the attached certificate of correction. Please complete this form (see below) and forward it with the file to:

Certificates of Correction Branch (CofC)
Randolph Square – 9D10-A
Palm Location 7580

Virginia Tolbert
Certificates of Correction Branch
571-272-0460

Thank You For Your Assistance

The request for issuing the above-identified correction(s) is hereby:
Note your decision on the appropriate box.

- ☒ **Approved** — **All** changes apply.
- ☐ **Approved in Part** — Specify below which changes **do not** apply.
- ☐ **Denied** — State the reasons for denial below.

Comments: _____

Ardin H. Marschel 1/21/2010
ARDIN H. MARSCHEL
SUPERVISORY PATENT EXAMINER

IN THE UNITED STATES PATENT AND TRADEMARK OFFICE

Applicant(s): O'Connor et al Patent No.: 7,622,470 Issued: November 24, 2009 Title: Treatment of T-Cell Lymphoma using 10-propargyl-10-deazaaminopterin Attorney Docket No.: MSK.P-085 Customer No.: 52334	Group Art Unit: 1614 Confirmation No: 5891

REQUEST FOR CERTIFICATE OF CORRECTION

Commissioner for Patents
P.O. Box 1450
Alexandria, VA 22313
Attention: Certificate of Corrections

Sir:

Enclosed is a request for Certificate of Correction regarding the above-referenced US Patent. The Certificate of Correction is necessary because claims 15, 69, 88, 89,106, 107 and 128 have typographical errors.

Claims 15, 69, 88, 89, 106, 107 and 128 were presented in an amendment filed April 27 , 2009. An examiner's amendment was made to renumber claim numbered greater than 90 on to 171. When the renumbering was done on claims 88, 89, 106, 107, and 128 to account for the cancellation of some claims, errors were introduced by the printer.

In the certificate, claims 15, 69, 88, 89, 106, 107 and 128 should be corrected as follows:

Column 8, Claim 15, Line 2 should read: ... lymphoma is a Human T-lymphotropic virus...

Column 10, Claim 69, Lines 31-32 should read: ... effective amount of a salt form of 10-propargyl-10-deazaaminopterin.

Column 11, Claim 88, Line 13 should read: The method of claim 87, wherein the 10-propargyl-10- ...

Column 11, Claim 89, Line 16 should read: The method of claim 87, wherein the 10-propargyl-10- ...

Column 12, Claim 106, Line 3 should read: The method of claim 105, wherein the 10-propargyl- ...

Column 12, Claim 107, Line 6 should read: The method of claim 105 wherein the 10-propargyl- ...

Column 13, Claim 128, Line 1 should read: The method of claim 127, wherein the 10-propargyl- ...

No fee is believed due with this submission since the errors were made by the USPTO.

Respectfully,

Larson & Anderson, LLC

Marina Larson Ph.D.,
PTO Reg. No. 32,038
P.O. Box 4928
Dillon, CO 80435-4928
Tel: (970) 262-1800

UNITED STATES PATENT AND TRADEMARK OFFICE

Commissioner for Patents
United States Patent and Trademark Office
P.O. Box 1450
Alexandria, VA 22313-1450
www.uspto.gov

KOKKA & BACKUS, PC
200 PAGE MILL ROAD
SUITE 103
PALO ALTO, CA 94306

COPY MAILED

AUG 0 1 2008

OFFICE OF PETITIONS

In re Application of	:	
Kerry Sheldon HARRIS	:	
Application No. 11/141,879	:	DECISION ON PETITION
Filed: May 31, 2005	:	TO WITHDRAW
Attorney Docket No. ACS-002	:	FROM RECORD
	:	

This is a decision on the Request to Withdraw as attorney or agent of record under 37 C.F.R. § 1.36(b), filed June 27, 2008.

The request is **NOT APPROVED**.

The Office cannot approve the request at this time since the reason provided does not meet any of the conditions under the mandatory or permissive categories enumerated in 37 CFR 10.40. Section 10.40 of Title 37 of the Code of Federal Regulation states, "a practitioner shall not withdraw from employment in a proceeding before the Office without permission from the Office." More specifically, 37 CFR 10.40 states, "if paragraph (b) of this section is not applicable, a practitioner may not request permission to withdraw in matter pending before the Office unless such request or such withdrawal is" for one the permissive reasons listed in 37 CFR 10.40(c). The reason set forth in the request, breach of written fee agreement, does not meet any of the conditions set forth in 37 CFR 10.40.

All future communications from the Office will continue to be directed to the above-listed address until otherwise notified by applicant.

Telephone inquiries concerning this decision should be directed to the undersigned at 571-272-6735.

Diane Goodwyn
Petitions Examiner
Office of Petitions

cc: KERRY HARRIS
IHT TECHNOLOGY, INC.
7715 MAINLAND RD.
SUITE 115
SAN ANTONIO, TX 78250

UNITED STATES PATENT AND TRADEMARK OFFICE

Commissioner for Patents
United States Patent and Trademark Office
P.O. Box 1450
Alexandria, VA 22313-1450
www.uspto.gov

BIOTECH BEACH LAW GROUP, PC
625 BROADWAY, SUITE 1210
SAN DIEGO, CA 92101

COPY MAILED

SEP 16 2008

OFFICE OF PETITIONS

In re Application of	:	
Kerry Sheldon HARRIS	:	
Application No. 11/141,879	:	DECISION ON PETITION
Filed: May 31, 2005	:	TO WITHDRAW
Attorney Docket No. ACS-002	:	FROM RECORD
	:	

This is a decision on the Request to Withdraw as attorney or agent of record under 37 C.F.R. § 1.36(b), filed August 8, 2008.

The request is **NOT APPROVED.**

A grantable request to withdraw as attorney/agent of record must be signed by every attorney/agent seeking to withdraw or contain a clear indication that one attorney is signing on behalf of another/others. The Office requires the practitioner(s) requesting withdrawal to certify that he, she, or they have: (1) given reasonable notice to the client, prior to the expiration of the response period, that the practitioner(s) intends to withdraw from employment; (2) delivered to the client or a duly authorized representative of the client all papers and property (including funds) to which the client is entitled; and (3) notified the client of any responses that may be due and the time frame within which the client must respond, pursuant 37 CFR 10.40(c).

The request cannot be approved because there is no indication that the acts noted above have been performed.

All future communications from the Office will continue to be directed to the above-listed address until otherwise notified by applicant.

Telephone inquiries concerning this decision should be directed to the undersigned at 571-272-6735.

Diane Goodwyn
Petitions Examiner
Office of Petitions

cc: KERRY HARRIS
IHT TECHNOLOGY, INC.
7715 MAINLAND RD, SUITE 115
SAN ANTONIO, TX 78250

UNITED STATES PATENT AND TRADEMARK OFFICE

Commissioner for Patents
United States Patent and Trademark Office
P.O. Box 1450
Alexandria, VA 22313-1450
www.uspto.gov

KOKKA & BACKUS, PC
200 PAGE MILL ROAD
SUITE 103
PALO ALTO CA 94306

COPY MAILED

SEP 30 2008

OFFICE OF PETITIONS

In re Application of	:	
Kerry Sheldon HARRIS	:	
Application No. 11/141,879	:	DECISION ON PETITION
Filed: May 31, 2005	:	TO WITHDRAW
Attorney Docket No. ACS-002	:	FROM RECORD
	:	

This is a decision on the Request to Withdraw as attorney or agent of record under 37 C.F.R. § 1.36(b), filed September 18, 2008.

The request is **APPROVED**.

A grantable request to withdraw as attorney/agent of record must be signed by every attorney/agent seeking to withdraw or contain a clear indication that one attorney is signing on behalf of another/others. The Office requires the practitioner(s) requesting withdrawal to certify that he, she, or they have: (1) given reasonable notice to the client, prior to the expiration of the response period, that the practitioner(s) intends to withdraw from employment; (2) delivered to the client or a duly authorized representative of the client all papers and property (including funds) to which the client is entitled; and (3) notified the client of any responses that may be due and the time frame within which the client must respond, pursuant 37 CFR 10.40(c).

The request was signed by Scott S. Kokka on behalf of the attorneys of record associated with Customer No. 53830.

The attorneys of record associated with Customer No. 53830 have been withdrawn.

Applicant is reminded that there is no attorney of record at this time.

Telephone inquiries concerning this decision should be directed to the undersigned at 571-272-6735.

Diane Goodwyn
Petitions Examiner
Office of Petitions

cc: KERRY HARRIS, IHT TECHNOLOGY, INC.
7715 MAINLAND RD., SUITE 115
SAN ANTONIO, TX 78250

UNITED STATES PATENT AND TRADEMARK OFFICE

Commissioner for Patents
United States Patent and Trademark Office
P.O. Box 1450
Alexandria, VA 22313-1450
www.uspto.gov

COPY MAILED

MAY 26 2009

OFFICE OF PETITIONS

KERRY HARRISM IHT
TECHNOLOGY, INC.
7715 MAINLAND RD., SUITE 115
SAN ANTONIO, TX 78240

In re Application of	:	
Kerry Sheldon HARRIS	:	
Application No. 11/141,879	:	DECISION ON PETITION
Filed: May 31, 2005	:	TO WITHDRAW
Attorney Docket No. KHA-002	:	FROM RECORD
	:	

This is a decision on the Request to Withdraw as attorney or agent of record under 37 C.F.R. § 1.36(b), filed May 4, 2009.

The request is **NOT APPROVED** as moot.

A review of the file record indicates that Kokka & Backus, was withdrawn with the Decision on Petition dated September 30, 2008. Accordingly, the request to withdraw under 37 C.F.R. § 1.36(b) is moot.

All future communications from the Office will continue to be directed to the above-listed address until otherwise notified by the applicant.

Telephone inquires concerning this decision should be directed to undersigned at 571-272- 6735.

Diane Goodwyn
Petitions Examiner
Office of Petitions

cc: KERRY S. HARRIS
7715 MAINLAND ROAD,
SUITE 115
SAN ANTONIO, TX 78250

cc: SCOTT S. KOKKA
200 PAGE MILL ROAD,
SUITE 103
PALO ALTO, CA 94306

UNITED STATES PATENT AND TRADEMARK OFFICE

Commissioner for Patents
United States Patent and Trademark Office
P.O. Box 1450
Alexandria, VA 22313-1450
www.uspto.gov

MAILED

JAN 13 2010

OFFICE OF PETITIONS

MCDERMOTT WILL & EMERY LLP
ATTN: IP DEPARTMENT
227 WEST MONROE STREET
SUITE 4400
CHICAGO IL 60606-5096

In re Application of	:	
Li, et al.	:	
Application No. 11/141,887	:	ON PETITION
Filed: June 1, 2005	:	
Attorney Docket No. 077087-0049	:	

This is a decision on the petition filed on November 9, 2009, pursuant to 37 CFR 1.137(b), to revive the above-identified application.

The petition is **GRANTED**.

The above-identified application became abandoned for failure to timely file a proper reply to the final Office action mailed on April 6, 2009. This Office action set a shortened statutory period for reply of three months. No proper reply having been received, the application became abandoned on July 7, 2009.[1] The Office mailed a Notice of Abandonment on October 30, 2009.

---

[1] Applicant did file an Amendment on June 15, 2009, but it failed to place the application in condition for allowance. Applicant was so notified in an Advisory Action mailed July 9, 2009.

With the instant petition, applicant paid the petition fee, submitted the required reply in the form of an RCE, and made the proper statement of unintentional delay.

The matter is being forwarded to Group Art Unit 3753 for consideration of the RCE, filed November 9, 2009.

Telephone inquiries concerning this decision should be directed to the undersigned at (571)272-3207.

Cliff Congo
Petitions Attorney
Office of Petitions

UNITED STATES PATENT AND TRADEMARK OFFICE

UNITED STATES DEPARTMENT OF COMMERCE
United States Patent and Trademark Office
Address: COMMISSIONER FOR PATENTS
P.O. Box 1450
Alexandria, Virginia 22313-1450
www.uspto.gov

MCKEE, VOORHEES & SEASE, P.L.C.
801 GRAND AVENUE
SUITE 3200
DES MOINES, IA 50309-2721

Mail Date: 04/20/2010

Applicant	: Aurelia Koby	: DECISION ON REQUEST FOR
Patent Number	: 7601168	: RECALCULATION of PATENT
Issue Date	: 10/13/2009	: TERM ADJUSTMENT IN VIEW
Appliction No	: 11/141,910	: OF WYETH AND NOTICE OF INTENT TO
Filed	: 06/01/2005	: ISSUE CERTIFICATE OF CORRECTION
		:

The Request for Recalculation is **GRANTED** to the extent indicated.

The patent term adjustment has been determined to be **256** days. The USPTO will *sua sponte* issue a certificate of correction reflecting the amount of PTA days determined by the recalculation.

Prior to the issuance of the certificate of correction, the USPTO will afford patentee an opportunity to be heard and request reconsideration. Accordingly, patentee has **one month or thirty (30) days**, whichever is longer, to file a request for reconsideration of this patent term adjustment calculation. See 35 U.S.C. 154(b)(3)(B)(ii) and 37 CFR 1.322(a)(4). No extensions of time will be granted under 37 CFR 1.136.

Patentee should use document code PET.OP if electronically filing a request for reconsideration of this patent term adjustment calculation. The patentee must also include the information required by 37 CFR 1.705(b)(2) and the fee required by 37 CFR 1.18(e). If patentee does not file a timely request for reconsideration of this patent term adjustment calculation including the information required by 37 CFR 1.705(b)(2) and the fee required by 37 CFR 1.18(e), the USPTO will issue a certificate of correction reflecting the PTA determination noted above.

Patentee should be aware that in order to preserve the right to review in the United States District Court for the District of Columbia of the USPTO patent term adjustment determination, patentee must ensure that he or she also take the steps required under 35 U.S.C. 154(b)(4)(A) in a timely manner. Nothing in the request for recalculation should be construed as providing an alternative time frame for commencing a civil action under 35 U.S.C. 154(b)(4)(A).

Any questions concerning this decision should be directed to the Office of Patent Legal Administration at 571-272-7702.

UNITED STATES PATENT AND TRADEMARK OFFICE

Commissioner for Patents
United States Patent and Trademark Office
P.O. Box 1450
Alexandria, VA 22313-1450
www.uspto.gov

DARBY & DARBY P.C.
P.O. BOX 770
CHURCH STREET STATION
NEW YORK, NY 10008-0770

COPY MAILED
OCT 08 2008
OFFICE OF PETITIONS

In re Patent No. 7,363,134 :
Issue Date: April 22, 2008 :
Application No. 11/141,930 : ON PETITION
Filed: May 31, 2005 :
Attorney Docket No. 04970/0202969-US0 :

This is a decision on the petition filed May 8, 2008, which is being treated as a request under 37 CFR 3.81(b)[1] to correct the name of the assignee on the front page of the above-identified patent by way of a Certificate of Correction.

The request is **GRANTED**.

Telephone inquiries concerning this decision may be directed to the undersigned at (571) 272-3204. Inquiries regarding the issuance of a certificate of correction should be directed to the Certificate of Correction Branch at (571) 272-4200.

The Certificates of Correction Branch will be notified of this decision granting the petition under 37 CFR 3.81(b) and directing issuance of the requested Certificate of Correction.

Sherry D. Brinkley
Petitions Examiner
Office of Petitions

[1] *See* MPEP 1309, subsection II; and Official Gazette of June 22, 2004.

UNITED STATES PATENT AND TRADEMARK OFFICE

Commissioner for Patents
United States Patent and Trademark Office
P.O. Box 1450
Alexandria, VA 22313-1450
www.uspto.gov

CHERNOFF, VILHAUER, MCCLUNG & STENZEL
1600 ODS TOWER
601 SW SECOND AVENUE
PORTLAND OR 97204-3157

COPY MAILED

JUN 2 0 2006

OFFICE OF PETITIONS

ON PETITION

In re Application of	:	
Benjamin C. Rivera	:	
Application No. 11/141,935	:	
Filed: May 31, 2005	:	
Attorney Docket No. DBH 9756.1004	:	

This is a decision on the petition, filed June 16, 2006, under 37 CFR 1.313(c)(2) to withdraw the above-identified application from issue after payment of the issue fee.

The petition is **GRANTED**.

The above-identified application is withdrawn from issue for consideration of a submission under 37 CFR 1.114 (request for continued examination). See 37 CFR 1.313(c)(2).

Petitioner is advised that the issue fee paid on May 5, 2006, in the above-identified application cannot be refunded. If, however, the above-identified application is again allowed, petitioner may request that it be applied towards the issue fee required by the new Notice of Allowance.[1]

Telephone inquiries should be directed to the undersigned at (571) 272-3208.

The examiner of Technology Center AU 3723 will consider the request for continued examination under 37 CFR 1.114.

Karen Creasy

Karen Creasy
Petitions Examiner
Office of Petitions

---

[1] The request to apply the issue fee to the new Notice may be satisfied by completing and returning the new Issue Fee Transmittal Form PTOL-85(b), which includes the following language thereon: "Commissioner for Patents is requested to apply the Issue Fee and Publication Fee (if any) or re-apply any previously paid issue fee to the application identified above." Petitioner is advised that, whether a fee is indicated as being due or not, the Issue Fee Transmittal Form **must** be completed and timely submitted to avoid abandonment. Note the language in bold text on the first page of the Notice of Allowance and Fee(s) Due (PTOL-85).

UNITED STATES PATENT AND TRADEMARK OFFICE

COMMISSIONER FOR PATENTS
UNITED STATES PATENT AND TRADEMARK OFFICE
P.O. BOX 1450
ALEXANDRIA, VA 22313-1450
www.uspto.gov

Paper No. _____

Date : June 20, 2006

TO : Director, Office of Patent Publication

FROM : Office of the Deputy Commissioner
for Patent Examination Policy

SUBJECT : Withdrawal from Issue of

Applicant(s) :Benjamin C. Rivera
Application No. :11/141,935
Filed :May 31, 2005

The above-identified application has been assigned Patent No. 7,065,818 and an issue date of June 27, 2006.

It is hereby directed that this application be withdrawn from issue at the request of the applicant.

Do not refund the issue fee.

The following erratum should be published in the Official Gazette if the above-identified application is published in the OG of June 27, 2006:

"All reference to Patent No. 7,065,818 to Benjamin C. Rivera of Oregon for FOLDING MULTIPURPOSE POCKET TOOL WITH FLOATING SPRINGS appearing in the Official Gazette of June 27, 2006 should be deleted since no patent was granted."

Karen Creasy

Karen Creasy
Petitions Examiner
Office of Petitions
Office of the Deputy Commissioner
for Patent Examination Policy

cc: Paul Harrison, MDW-4B03,(FAX-273-5468)
Deneise Boyd, MDE-3D39 (FAX-273-5124)
Mary Louise McAskill, ST-8C15 (FAX 305-4372)
Niomi Farmer, ST-8C14 (FAX-305-4372)
Mary E. Johnson (Cookie), MDE-7C71 (FAX 273-0038
Duane Davis P/OPC MDE-7D89

UNITED STATES PATENT AND TRADEMARK OFFICE

UNITED STATES DEPARTMENT OF COMMERCE
United States Patent and Trademark Office
Address: COMMISSIONER FOR PATENTS
P.O. Box 1450
Alexandria, Virginia 22313-1450
www.uspto.gov

KNOBLE, YOSHIDA & DUNLEAVY
EIGHT PENN CENTER
SUITE 1350, 1628 JOHN F KENNEDY BLVD
PHILADELPHIA, PA 19103

Mail Date: 04/21/2010

Applicant	: Steven B. Dunn	: DECISION ON REQUEST FOR
Patent Number	: 7614362	: RECALCULATION of PATENT
Issue Date	: 11/10/2009	: TERM ADJUSTMENT IN VIEW
Appliction No	: 11/141,940	: OF WYETH AND NOTICE OF INTENT TO
Filed	: 06/01/2005	: ISSUE CERTIFICATE OF CORRECTION
		:

The Request for Recalculation is **GRANTED** to the extent indicated.

The patent term adjustment has been determined to be **132** days. The USPTO will *sua sponte* issue a certificate of correction reflecting the amount of PTA days determined by the recalculation.

Prior to the issuance of the certificate of correction, the USPTO will afford patentee an opportunity to be heard and request reconsideration. Accordingly, patentee has **one month or thirty (30) days**, whichever is longer, to file a request for reconsideration of this patent term adjustment calculation. See 35 U.S.C. 154(b)(3)(B)(ii) and 37 CFR 1.322(a)(4). No extensions of time will be granted under 37 CFR 1.136.

Patentee should use document code PET.OP if electronically filing a request for reconsideration of this patent term adjustment calculation. The patentee must also include the information required by 37 CFR 1.705(b)(2) and the fee required by 37 CFR 1.18(e). If patentee does not file a timely request for reconsideration of this patent term adjustment calculation including the information required by 37 CFR 1.705(b)(2) and the fee required by 37 CFR 1.18(e), the USPTO will issue a certificate of correction reflecting the PTA determination noted above.

Patentee should be aware that in order to preserve the right to review in the United States District Court for the District of Columbia of the USPTO patent term adjustment determination, patentee must ensure that he or she also take the steps required under 35 U.S.C. 154(b)(4)(A) in a timely manner. Nothing in the request for recalculation should be construed as providing an alternative time frame for commencing a civil action under 35 U.S.C. 154(b)(4)(A).

Any questions concerning this decision should be directed to the Office of Patent Legal Administration at 571-272-7702.

UNITED STATES PATENT AND TRADEMARK OFFICE

UNITED STATES DEPARTMENT OF COMMERCE
United States Patent and Trademark Office
Address: COMMISSIONER FOR PATENTS
P.O. Box 1450
Alexandria, Virginia 22313-1450
www.uspto.gov

GAZDZINSKI & ASSOCIATES, P.C.
16644 WEST BERNARDO DRIVE
SUITE 201
SAN DIEGO, CA 92127

Mail Date: 04/21/2010

Applicant	: Jerrold Von Hauck	: DECISION ON REQUEST FOR
Patent Number	: 7583656	: RECALCULATION of PATENT
Issue Date	: 09/01/2009	: TERM ADJUSTMENT IN VIEW
Appliction No	: 11/141,944	: OF WYETH AND NOTICE OF INTENT TO
Filed	: 05/31/2005	: ISSUE CERTIFICATE OF CORRECTION
		:

The Request for Recalculation is **GRANTED** to the extent indicated.

The patent term adjustment has been determined to be **1089** days. The USPTO will *sua sponte* issue a certificate of correction reflecting the amount of PTA days determined by the recalculation.

Prior to the issuance of the certificate of correction, the USPTO will afford patentee an opportunity to be heard and request reconsideration. Accordingly, patentee has **one month or thirty (30) days**, whichever is longer, to file a request for reconsideration of this patent term adjustment calculation. See 35 U.S.C. 154(b)(3)(B)(ii) and 37 CFR 1.322(a)(4). No extensions of time will be granted under 37 CFR 1.136.

Patentee should use document code PET.OP if electronically filing a request for reconsideration of this patent term adjustment calculation. The patentee must also include the information required by 37 CFR 1.705(b)(2) and the fee required by 37 CFR 1.18(e). If patentee does not file a timely request for reconsideration of this patent term adjustment calculation including the information required by 37 CFR 1.705(b)(2) and the fee required by 37 CFR 1.18(e), the USPTO will issue a certificate of correction reflecting the PTA determination noted above.

Patentee should be aware that in order to preserve the right to review in the United States District Court for the District of Columbia of the USPTO patent term adjustment determination, patentee must ensure that he or she also take the steps required under 35 U.S.C. 154(b)(4)(A) in a timely manner. Nothing in the request for recalculation should be construed as providing an alternative time frame for commencing a civil action under 35 U.S.C. 154(b)(4)(A).

Any questions concerning this decision should be directed to the Office of Patent Legal Administration at 571-272-7702.

UNITED STATES PATENT AND TRADEMARK OFFICE

UNITED STATES DEPARTMENT OF COMMERCE
United States Patent and Trademark Office
Address: COMMISSIONER FOR PATENTS
P.O. Box 1450
Alexandria, Virginia 22313-1450
www.uspto.gov

MCKEE, VOORHEES & SEASE, P.L.C.
801 GRAND AVENUE
SUITE 3200
DES MOINES, IA 50309-2721

Mail Date: 04/20/2010

Applicant	: Aurelia Koby	: DECISION ON REQUEST FOR
Patent Number	: 7645250	: RECALCULATION of PATENT
Issue Date	: 01/12/2010	: TERM ADJUSTMENT IN VIEW
Appliction No	: 11/141,952	: OF WYETH AND NOTICE OF INTENT TO
Filed	: 06/01/2005	: ISSUE CERTIFICATE OF CORRECTION
		:

The Request for Recalculation is **GRANTED** to the extent indicated.

The patent term adjustment has been determined to be **1114** days. The USPTO will *sua sponte* issue a certificate of correction reflecting the amount of PTA days determined by the recalculation.

Prior to the issuance of the certificate of correction, the USPTO will afford patentee an opportunity to be heard and request reconsideration. Accordingly, patentee has **one month or thirty (30) days**, whichever is longer, to file a request for reconsideration of this patent term adjustment calculation. See 35 U.S.C. 154(b)(3)(B)(ii) and 37 CFR 1.322(a)(4). No extensions of time will be granted under 37 CFR 1.136.

Patentee should use document code PET.OP if electronically filing a request for reconsideration of this patent term adjustment calculation. The patentee must also include the information required by 37 CFR 1.705(b)(2) and the fee required by 37 CFR 1.18(e). If patentee does not file a timely request for reconsideration of this patent term adjustment calculation including the information required by 37 CFR 1.705(b)(2) and the fee required by 37 CFR 1.18(e), the USPTO will issue a certificate of correction reflecting the PTA determination noted above.

Patentee should be aware that in order to preserve the right to review in the United States District Court for the District of Columbia of the USPTO patent term adjustment determination, patentee must ensure that he or she also take the steps required under 35 U.S.C. 154(b)(4)(A) in a timely manner. Nothing in the request for recalculation should be construed as providing an alternative time frame for commencing a civil action under 35 U.S.C. 154(b)(4)(A).

Any questions concerning this decision should be directed to the Office of Patent Legal Administration at 571-272-7702.

UNITED STATES PATENT AND TRADEMARK OFFICE

UNITED STATES DEPARTMENT OF COMMERCE
United States Patent and Trademark Office
Address: COMMISSIONER FOR PATENTS
P.O. Box 1450
Alexandria, Virginia 22313-1450
www.uspto.gov

Carmen Patti Law Group, LLC
One N. LaSalle Street
44th Floor
Chicago, IL 60602

Mail Date: 07/02/2010

Applicant	: Richard P. Ejzak	: DECISION ON REQUEST FOR
Patent Number	: 7639669	: RECALCULATION of PATENT
Issue Date	: 12/29/2009	: TERM ADJUSTMENT IN VIEW
Application No	: 11/141,956	: OF WYETH AND NOTICE OF INTENT TO
Filed	: 06/01/2005	: ISSUE CERTIFICATE OF CORRECTION
		:

The Request for Recalculation is **GRANTED** to the extent indicated.

The patent term adjustment has been determined to be **1246** days. The USPTO will *sua sponte* issue a certificate of correction reflecting the amount of PTA days determined by the recalculation.

Prior to the issuance of the certificate of correction, the USPTO will afford patentee an opportunity to be heard and request reconsideration. Accordingly, patentee has **one month or thirty (30) days**, whichever is longer, to file a request for reconsideration of this patent term adjustment calculation. See 35 U.S.C. 154(b)(3)(B)(ii) and 37 CFR 1.322(a)(4). No extensions of time will be granted under 37 CFR 1.136.

Patentee should use document code PET.OP if electronically filing a request for reconsideration of this patent term adjustment calculation. The patentee must also include the information required by 37 CFR 1.705(b)(2) and the fee required by 37 CFR 1.18(e). If patentee does not file a timely request for reconsideration of this patent term adjustment calculation including the information required by 37 CFR 1.705(b)(2) and the fee required by 37 CFR 1.18(e), the USPTO will issue a certificate of correction reflecting the PTA determination noted above.

Patentee should be aware that in order to preserve the right to review in the United States District Court for the District of Columbia of the USPTO patent term adjustment determination, patentee must ensure that he or she also take the steps required under 35 U.S.C. 154(b)(4)(A) in a timely manner. Nothing in the request for recalculation should be construed as providing an alternative time frame for commencing a civil action under 35 U.S.C. 154(b)(4)(A).

Any questions concerning this decision should be directed to the Office of Patent Legal Administration at 571-272-7702.

UNITED STATES PATENT AND TRADEMARK OFFICE

Commissioner for Patents
United States Patent and Trademark Office
P.O. Box 1450
Alexandria, VA 22313-1450
www.uspto.gov
DIW Aug-05

VOLPE AND KOENIG, P.C.
DEPT. ICC
UNITED PLAZA, SUITE 1600
30 SOUTH 17TH STREET
PHILADELPHIA PA 19103

COPY MAILED

AUG 2 6 2005

OFFICE OF PETITIONS

In re Application of	:	
Sharif M. Shahrier	:	DECISION ON PETITION
Application No. 11/141,961	:	
Filed: 1 June, 2005	:	
Atty Docket No. 1-2-0180.2US	:	

This is a decision on "Response to Notice of Incomplete Nonprovisional Application Filed Under 37 CFR 1.53(b)" which is treated as a petition, filed on 1 August, 2005, requesting that the above-identified application, including 16 sheets of drawings, be accorded a filing date of 1 June, 2005.

The petition is **GRANTED**.

On 1 June, 2005, the application was filed.

On 1 July, 2005, Initial Patent Examination Division mailed a Notice of Incomplete Nonprovisional Application stating that the application had not been accorded a filing date because the application had been deposited without drawings.

In response, on 1 August, 2005, the present petition was filed. Petitioner argues that 12 sheets of drawings were filed with the other application papers on 1 June, 2005, but were subsequently misplaced in the U.S. Patent and Trademark Office (Office). In support, a copy of petitioners' postcard receipt was supplied with the petition. The postcard receipt shows an Office date stamp of "060105", and the above-identified application number, and acknowledges receipt of, *inter alia*, "16 sheets of Drawings" The postcard also identifies the application by inventor's name, invention title, and docket number.

Upon review of the record, no sheets of drawings deposited on June, 2005, have been located among the application papers. However, the evidence is convincing that the application papers deposited on 1 June, 2005, included 12 sheets of drawings, which were subsequently misplaced in the USPTO. Therefore, the

application, including 12 sheets of drawings, was complete on filing and entitled to a filing date of 1 June, 2005. The application will be processed and examined using the copy of the 16 sheets of drawings supplied on 1 August, 2005.

As petitioner has shown that the present petition was due to Office error, no petition fee is due and none has been charged.

The application is being referred to the Office of Initial Patent Examination for further processing with a filing date of 1 June, 2005, using the application papers filed on that date and the copy of 16 sheets supplied with the present petition, and for an indication in Office records that 16 sheets of drawings were present on filing.

Telephone inquires should be directed to the undersigned at 571.272.3231.

D Wood

Douglas I. Wood
Senior Petitions Attorney
Office of Petitions

UNITED STATES PATENT AND TRADEMARK OFFICE

UNITED STATES DEPARTMENT OF COMMERCE
United States Patent and Trademark Office
Address: COMMISSIONER FOR PATENTS
P.O. Box 1450
Alexandria, Virginia 22313-1450
www.uspto.gov

APPLICATION NO.	FILING DATE	FIRST NAMED INVENTOR	ATTORNEY DOCKET NO.	CONFIRMATION NO.
11/141,963	06/01/2005	Thomas Ray Becker	04-472-A	6688

7590 06/19/2009

Jason J. Derry
McDonnell Boehnen Hulbert & Berghoff LLP
31st Floor
300 S. Wacker Drive
Chicago, IL 60606

EXAMINER
FISHER, ABIGAIL L

ART UNIT	PAPER NUMBER
1616	

MAIL DATE	DELIVERY MODE
06/19/2009	PAPER

Please find below and/or attached an Office communication concerning this application or proceeding.

The time period for reply, if any, is set in the attached communication.

UNITED STATES DEPARTMENT OF COMMERCE
U.S. Patent and Trademark Office
Address: COMMISSIONER FOR PATENTS
P.O. Box 1450
Alexandria, Virginia 22313-1450

APPLICATION NO./ CONTROL NO.	FILING DATE	FIRST NAMED INVENTOR / PATENT IN REEXAMINATION	ATTORNEY DOCKET NO.
11141963	6/1/2005	BECKER, THOMAS RAY	04-472-A

EXAMINER
ABIGAIL FISHER

ART UNIT	PAPER
1616	20090613A

DATE MAILED:

Jason J. Derry
McDonnell Boehnen Hulbert & Berghoff LLP
31st Floor
300 S. Wacker Drive
Chicago, IL 60606

Please find below and/or attached an Office communication concerning this application or proceeding.

Commissioner for Patents

Please see the attached for t he decition on the Pettion under 37 CFR 1.84(a)(2).

/Johann R. Richter/ 6/18/09
Supervisory Patent Examiner, Art Unit 1616

McDonnell Boehnen Hulbert & Berghoff LLP
31st Floor
300 S. Wacker Drive
Chicago, IL 60606

In re Application of :
Thomas Ray Becker :
Serial No.: 11/141963 : PETITION
DECISION
Filed: June 1 2005 :
Attorney Docket No.: 003301-135 :

This is a decision on the PETITION FOR ACCEPTANCE OF COLOR DRAWINGS UNDER 37 CFR 1.84(a)(2). The petition was filed June 3 2009. Entry of color drawings requires: 1) three sets of the color drawings, 2) a proper amendment to the specification indicating color photographs or drawings are present in the file, and 3) the required free under 37 CFR 1.17(h).

A review of the application record indicates tht the petition does not meet all of the requirements for acceptance of color drawings due to the submission of the color drawings via EFS-web as well as the lack of the three (3) sets of color drawings. It is noted that only design applications may submit drawings via EFS-Web. Drawings submitted via EFS-WEB in application types other than design applications must be in bitonal black and white **only**.

The petition is dismissed.

If the requisite three (3) hard copies are submitted with a renewed petition via regular mail then that renewed petition would be granted.

Any inquiry concerning this communication, please contact Johann Richter can be reached on 571-272-0646. The fax phone number for the organization where this application or proceeding is assigned is 571-273-8300.

Information regarding the status of an application may be obtained from the Patent Application Information Retrieval (PAIR) system. Status information for published applications may be obtained from either Private PAIR or Public PAIR. Status information for unpublished applications is available through Private PAIR only. For more information about the PAIR system, see http://pair-direct.uspto.gov. Should you have questions on access to the Private PAIR system, contact the Electronic Business Center (EBC) at 866-217-9197 (toll-free). If you would like assistance from a USPTO Customer Service Representative or access to the automated information system, call 800-786-9199 (IN USA OR CANADA) or 571-272-1000.

/Johann R. Richter/
Supervisory Patent Examiner, Art Unit 1616

6/18/09

UNITED STATES PATENT AND TRADEMARK OFFICE

Commissioner for Patents
United States Patent and Trademark Office
P.O. Box 1450
Alexandria, VA 22313-1450
www.uspto.gov

KLAUBER & JACKSON
411 HACKENSACK AVENUE
HACKENSACK, NJ 07601

COPY MAILED

DEC 19 2007

OFFICE OF PETITIONS

In re Application of	:	
Camilo Vazquez Perez	:	
Application No. 11/141,982	:	DECISION ON PETITION
Filed: June 1, 2005	:	
Attorney Docket No. 2717-1-001CON	:	

This is a decision on the petition under the unintentional provisions of 37 CFR 1.137(b), filed October 1, 2007, to revive the above-identified application.

The petition is **DISMISSED**.

Any request for reconsideration of this decision must be submitted within TWO (2) MONTHS from the mail date of this decision. Extensions of time under 37 CFR 1.136(a) are permitted. The reconsideration request should include a cover letter entitled "Renewed Petition under 37 CFR 1.137(b)." This is **not** a final agency action within the meaning of 5 U.S.C. § 704.

The application became abandoned for failure to reply in a timely manner to the Notice to File Missing Parts of Non-Provisional Application (Notice), mailed July 6, 2005. The Notice set a period for reply of two (2) months from the mail date of the Notice. No extensions of time under the provisions of 37 CFR 1.136(a) were obtained. Accordingly, the application became abandoned on September 7, 2005.

A grantable petition under 37 CFR 1.137(b) must be accompanied by: (1) the required reply, unless previously filed; (2) the petition fee as set forth in 37 CFR 1.17(m); (3) a statement that the entire delay in filing the required reply from the due date for the reply until the filing of a grantable petition pursuant to 37 CFR 1.137(b) was unintentional; and (4) any terminal disclaimer (and fee as set forth in 37 CFR 1.20(d)) required by 37 CFR 1.137(d). Where there is a question as to whether either the abandonment or the delay in filing a petition under 37 CFR 1.137 was unintentional, the Director may require additional information. *See* MPEP 711.03(c)(II)(C) and (D). The instant petition lacks item (3).

There are three periods to be considered during the evaluation of a petition under 37 CFR 1.137(b):

(1) the delay in reply that originally resulted in the abandonment;

(2) the delay in filing an initial petition pursuant to 37 CFR 1.137(b) to revive the application; and

(3) the delay in filing a grantable petition pursuant to 37 CFR 1.137(b) to revive the application.

Currently, the delay has not been shown to the satisfaction of the Director to be unintentional for periods (1) and (2).

As to Period (1):

The patent statute at 35 U.S.C. § 41(a)(7) authorizes the Director to revive an "unintentionally abandoned application." The legislative history of Public Law 97-247 reveals that the purpose of 35 U.S.C. § 41(a)(7) is to permit the Office to have more discretion than in 35 U.S.C. §§ 133 or 151 to revive abandoned applications in appropriate circumstances, but places a limit on this discretion, stating that "[u]nder this section a petition accompanied by either a fee of $500 or a fee of $50 **would not be granted where the abandonment** or the failure to pay the fee for issuing the patent **was intentional** as opposed to being unintentional or unavoidable." [emphasis added]. See H.R. Rep. No. 542, 97th Cong., 2d Sess. 6-7 (1982), *reprinted in* 1982 U.S.C.C.A.N. 770-71. The revival of an intentionally abandoned application is antithetical to the meaning and intent of the statute and regulation.

35 U.S.C. § 41(a)(7) authorizes the Director to accept a petition "for the revival of an unintentionally abandoned application for a patent." As amended December 1, 1997, 37 CFR 1.137(b)(3) provides that a petition under 37 CFR 1.137(b) must be accompanied by a statement that the delay was unintentional, but provides that "[t]he Commissioner may require additional information where there is a question whether the delay was unintentional." Where, as here, there is a question whether the initial delay was unintentional, the petitioner must meet the burden of establishing that the delay was unintentional within the meaning of 35 U.S.C. § 41(a)(7) and 37 CFR 1.137(b). *See* In re Application of G, 11 USPQ2d 1378, 1380 (Comm'r Pats. 1989); 37 CFR 1.137(b). Here, in view of the inordinate delay (over 2 years) in resuming prosecution, there is a question whether the entire delay was unintentional. Petitioner should note that the issue is not whether some of the delay was unintentional by any party; rather, the issue is whether the entire delay has been shown to the satisfaction of the Director to be unintentional.

The question under 37 CFR 1.137(b) for period (1) is whether the delay on the part of the party having the right or authority to reply to avoid abandonment (or not reply) was unintentional. Accordingly, any renewed petition must clearly identify the party having the right to reply to avoid abandonment on September 6, 2005. That party, in turn must explain what effort(s) was made to further reply to the outstanding Office action and, further, why no reply was filed. If no effort was made to further reply, then that party must explain why the delay in this application does not result from a deliberate course of action (or inaction). Likewise, as the firm of Klauber & Jackson was counsel of record at the time of abandonment, the firm of Klauber & Jackson should explain why this application became abandoned while it was under their control and what efforts the firm made to further reply of itself and with whom this matter was discussed outside of the firm of Klauber & Jackson. Copies of any correspondence relating to the filing, or to not filing a further reply to the outstanding Office action are required from responsible person(s), appointed attorneys and whoever else was involved with this application at the time of abandonment. Statements are required from any and all persons then at the firm of Klauber & Jackson, and the responsible person(s) having firsthand knowledge of the circumstances surrounding the lack of a reply to the outstanding Office action. As the courts have made clear, it is pointless for the USPTO to revive a long abandoned application without an adequate showing that the delay did not result from a deliberate course of action. *See* Lawman Armor v. Simon, 2005 U.S. Dist. LEXIS 10843, 74 USPQ2d 1633 (DC EMich 2005); Field Hybrids, LLC v. Toyota Motor Corp., 2005 U.S. Dist. LEXIS 1159 (D. Minn Jan. 27, 2005); Lumenyte Int'l Corp. v. Cable Lite Corp., Nos. 96-1011, 96-1077, 1996 U.S. App. LEXIS 16400, 1996 WL 383927 (Fed. Cir. July 9, 1996) (unpublished) (patents held unenforceable due to a finding of inequitable conduct in submitting an inappropriate statement that the abandonment was unintentional).

As to Period (2):

Likewise, where the applicant deliberately chooses not to seek or persist in seeking the revival of an abandoned application, or where the applicant deliberately chooses to delay seeking the revival of an abandoned application, the resulting delay in seeking revival of the abandoned application cannot be considered as "unintentional" within the meaning of 37 CFR 1.137(b). *See* MPEP 711.03(c).

The language of both 35 U.S.C. § 41(a)(7) and 37 CFR 1.137(b) are clear and unambiguous, and, furthermore, without qualification. That is, the delay in filing the reply during prosecution, as well as in filing the petition seeking revival, must have been, without qualification, "unintentional" for the reply to now be accepted on petition. The Office requires that the entire delay be at least unintentional as a prerequisite to revival of an abandoned application to prevent abuse and injury to the public. *See* H.R. Rep. No. 542, 97th Cong., 2d Sess. 7 (1982), reprinted in 1982 U.S.C.C.A.N. 771 ("[i]n order to prevent abuse and injury to the public the Commissioner . . . could require applicants to act promptly after becoming aware of the abandonment"). The December 1997 change to 37 CFR 1.137 did not create any new right to overcome an intentional delay in seeking revival, or in renewing an attempt at seeking revival, of an abandoned

application. *See* Changes to Patent Practice and Procedure; Final Rule Notice, 62 Fed. Reg. 53131, 53160 (October 10, 1997), 1203 Off. Gaz. Pat. Office 63, 87 (October 21, 1997), which clearly stated that any protracted delay (here, over 2 years) could trigger, as here, a request for additional information. As the courts have since made clear, a protracted delay in seeking revival, as here, requires a petitioner's detailed explanation seeking to excuse the delay as opposed to USPTO acceptance of a general allegation of unintentional delay. *See* Lawman Armor v. Simon, 2005 U.S. Dist. LEXIS 10843, 74 USPQ2d 1633, at 1637-8 (DC EMich 2005); Field Hybrids, LLC v. Toyota Motor Corp., 2005 U.S. Dist. LEXIS 1159 (D. Minn Jan. 27, 2005) at *21-*23. Statements are required from any and all persons then at the firm of Klauber & Jackson and the responsible person(s) having firsthand knowledge of the circumstances surrounding the protracted delay, after the abandonment date, in seeking revival.

As noted in MPEP 711.03(c)(II), subsection D, in instances in which such petition was not filed within 1 year of the date of abandonment of the application, applicants should include:

> (A) the date that the applicant first became aware of the abandonment of the application; and
> (B) a showing as to how the delay in discovering the abandoned status of the application occurred despite the exercise of due care or diligence on the part of the applicant.

In either instance, applicant's failure to carry the burden of proof to establish that the "entire" delay was "unavoidable" or "unintentional" may lead to the denial of a petition under 37 CFR 1.137(b), regardless of the circumstances that originally resulted in the abandonment of the application. *See also* New York University v. Autodesk, 2007 U.S. DIST LEXIS, U.S.District LEXIS 50832, *10 -*12 (S.D.N.Y. 2007)(protracted delay in seeking revival undercuts assertion of unintentional delay).

Any renewed petition may be addressed as follows:

By Mail:
Mail Stop PETITION
Commissioner for Patents
P. O. Box 1450
Alexandria, VA 22313-1450

By hand:
U. S. Patent and Trademark Office
Customer Service Window, Mail Stop Petitions
Randolph Building
401 Dulany Street
Alexandria, VA 22314

The centralized facsimile number is **(571) 273-8300.**

Correspondence regarding this decision may also be filed through the electronic filing system of the USPTO.

Telephone inquiries concerning this decision should be directed to Kimberly Inabinet at (571) 272-4618.

Frances Hicks
Petitions Examiner
Office of Petitions

UNITED STATES PATENT AND TRADEMARK OFFICE

Commissioner for Patents
United States Patent and Trademark Office
P.O. Box 1450
Alexandria, VA 22313-1450
www.uspto.gov

MAILED

MAR 30 2009

OFFICE OF PETITIONS

KLAUBER & JACKSON
411 HACKENSACK AVENUE
HACKENSACK, NJ 07601

In re Application of	:	
Camilo Vazquez Perez et al.	:	
Application No. 11/141,982	:	DECISION ON PETITION
Filed: June 1, 2005	:	
Attorney Docket No. 2717-1-001CON	:	

This is a decision on the renewed petition under the unintentional provisions of 37 CFR 1.137(b), filed June 26, 2008, to revive the above-identified application.

The petition is **DISMISSED**.

Any request for reconsideration of this decision must be submitted within TWO (2) MONTHS from the mail date of this decision. Extensions of time under 37 CFR 1.136(a) are permitted. The reconsideration request should include a cover letter entitled "Renewed Petition under 37 CFR 1.137(b)." This is **not** a final agency action within the meaning of 5 U.S.C. § 704.

The application became abandoned for failure to reply in a timely manner to the Notice to File Missing Parts of Non-Provisional Application (Notice), mailed July 6, 2005. The Notice set a period for reply of two (2) months from the mail date of the Notice. No extensions of time under the provisions of 37 CFR 1.136(a) were obtained. Accordingly, the application became abandoned on September 7, 2005. A Notice of Abandonment was mailed on March 16, 2006.

A grantable petition under 37 CFR 1.137(b) must be accompanied by: (1) the required reply, unless previously filed; (2) the petition fee as set forth in 37 CFR 1.17(m); (3) a statement that the entire delay in filing the required reply from the due date for the reply until the filing of a grantable petition pursuant to 37 CFR 1.137(b) was unintentional; and (4) any terminal disclaimer (and fee as set forth in 37 CFR 1.20(d)) required by 37 CFR 1.137(d). Where there is a question as to whether either the abandonment or the delay in filing a petition under 37 CFR 1.137 was unintentional, the Director may require additional information. *See* MPEP 711.03(c)(II)(C) and (D). The instant petition lacks item (3).

The petition decision mailed December 19, 2007 dismissed the petition filed on October 1, 2007 for failure to provide necessary information regarding a delay in filing a response to the Notice mailed July 6, 2005.

The renewed petition provided emails that were sent to the offices of Ungria Patentes Y Marcas, S.A. a representative of the assignee Facet Iberica, S.A. The documents provided showed due diligence on behalf of the attorney David A. Jackson regarding the prosecution of this application.

The burden of proof falls on the representatives of the assignee Ungria Patentes Y Marcas, S.A. and the assignee Facet Iberica, S.A. Statements and/or any documentation is needed from Ungria Patentes Y Marcas, S.A. as to why there were delays in responding to the numerous emails from attorney David A. Jackson's office of how to respond to the Notice to File Missing Parts, mailed on July 6, 2005 and how to handle the application after assignee's representative's became aware of the abandonment of the application and the filing of a petition to revive. Also were the assignee Facet Iberica, S.A. aware of the status of the application and the intent of a filing of a petition to revive.

Any renewed petition may be addressed as follows:

By Mail: Mail Stop PETITION
Commissioner for Patents
P. O. Box 1450
Alexandria, VA 22313-1450

By hand: U. S. Patent and Trademark Office
Customer Service Window, Mail Stop Petitions
Randolph Building
401 Dulany Street
Alexandria, VA 22314

The centralized facsimile number is **(571) 273-8300.**

Correspondence regarding this decision may also be filed through the electronic filing system of the USPTO.

Telephone inquiries concerning this decision should be directed to Kimberly Inabinet at (571) 272-4618.

Carl Friedman
Petitions Examiner
Office of Petitions

UNITED STATES PATENT AND TRADEMARK OFFICE

Commissioner for Patents
United States Patent and Trademark Office
P.O. Box 1450
Alexandria, VA 22313-1450
www.uspto.gov

COPY MAILED

DEC 30 2009

OFFICE OF PETITIONS

KLAUBER & JACKSON
411 HACKENSACK AVENUE
HACKENSACK, NJ 07601

In re Application of	:	
Camilo Vazquez Perez et al.	:	
Application No. 11/141,982	:	DECISION ON PETITION
Filed: June 1, 2005	:	
Attorney Docket No. 2717-1-001CON	:	

This is a decision on the renewed petition under the unintentional provisions of 37 CFR 1.137(b), filed September 30, 2009, to revive the above-identified application.

The petition is **GRANTED**.

The application became abandoned for failure to reply in a timely manner to the Notice to File Missing Parts of Non-Provisional Application (Notice), mailed July 6, 2005. The Notice set a period for reply of two (2) months from the mail date of the Notice. No extensions of time under the provisions of 37 CFR 1.136(a) were obtained. Accordingly, the application became abandoned on September 7, 2005. A Notice of Abandonment was mailed on March 16, 2006.

The petition satisfies the requirements of 37 CFR 1.137(b) in that petitioner has supplied (1) the reply in the form of an oath and declaration with the required $65 surcharge fee, $100 examination fee, $150 filing fee and $250 search fee (2) the petition fee of $750, and (3) a proper statement of unintentional delay. Accordingly the oath and declaration and fees are accepted as being unintentionally delayed.

Telephone inquiries should be directed to the Kimberly Inabinet at (571) 272-4618.

This application is being referred to the Office of Patent Application Processing for appropriate action in the normal course of business on the reply received October 1, 2007.

Carl Friedman
Petitions Examiner
Office of Petitions

UNITED STATES PATENT AND TRADEMARK OFFICE

UNITED STATES DEPARTMENT OF COMMERCE
United States Patent and Trademark Office
Address: COMMISSIONER FOR PATENTS
P.O. Box 1450
Alexandria, Virginia 22313-1450
www.uspto.gov

KNOBBE MARTENS OLSON & BEAR LLP
2040 MAIN STREET
FOURTEENTH FLOOR
IRVINE, CA 92614

Mail Date: 06/04/2010

Applicant	: Christopher Ian Bargh	: DECISION ON REQUEST FOR
Patent Number	: 7644370	: RECALCULATION of PATENT
Issue Date	: 01/05/2010	: TERM ADJUSTMENT IN VIEW
Application No	: 11/141,991	: OF WYETH AND NOTICE OF INTENT TO
Filed	: 05/31/2005	: ISSUE CERTIFICATE OF CORRECTION
		:

The Request for Recalculation is **GRANTED** to the extent indicated.

The patent term adjustment has been determined to be **1069** days. The USPTO will *sua sponte* issue a certificate of correction reflecting the amount of PTA days determined by the recalculation.

Prior to the issuance of the certificate of correction, the USPTO will afford patentee an opportunity to be heard and request reconsideration. Accordingly, patentee has **one month or thirty (30) days**, whichever is longer, to file a request for reconsideration of this patent term adjustment calculation. See 35 U.S.C. 154(b)(3)(B)(ii) and 37 CFR 1.322(a)(4). No extensions of time will be granted under 37 CFR 1.136.

Patentee should use document code PET.OP if electronically filing a request for reconsideration of this patent term adjustment calculation. The patentee must also include the information required by 37 CFR 1.705(b)(2) and the fee required by 37 CFR 1.18(e). If patentee does not file a timely request for reconsideration of this patent term adjustment calculation including the information required by 37 CFR 1.705(b)(2) and the fee required by 37 CFR 1.18(e), the USPTO will issue a certificate of correction reflecting the PTA determination noted above.

Patentee should be aware that in order to preserve the right to review in the United States District Court for the District of Columbia of the USPTO patent term adjustment determination, patentee must ensure that he or she also take the steps required under 35 U.S.C. 154(b)(4)(A) in a timely manner. Nothing in the request for recalculation should be construed as providing an alternative time frame for commencing a civil action under 35 U.S.C. 154(b)(4)(A).

Any questions concerning this decision should be directed to the Office of Patent Legal Administration at 571-272-7702.

UNITED STATES PATENT AND TRADEMARK OFFICE

UNITED STATES DEPARTMENT OF COMMERCE
United States Patent and Trademark Office
Address: COMMISSIONER FOR PATENTS
P.O. Box 1450
Alexandria, Virginia 22313-1450
www.uspto.gov

SAP_DLG
7910 IVANHOE AVE.
325
LA JOLLA, CA 92037

Mail Date: 04/23/2010

Applicant	: David Brookler	: DECISION ON REQUEST FOR
Patent Number	: 7664737	: RECALCULATION of PATENT
Issue Date	: 02/16/2010	: TERM ADJUSTMENT IN VIEW
Appliction No	: 11/141,997	: OF WYETH AND NOTICE OF INTENT TO
Filed	: 05/31/2005	: ISSUE CERTIFICATE OF CORRECTION
		:

The Request for Recalculation is **GRANTED** to the extent indicated.

The patent term adjustment has been determined to be **367** days. The USPTO will *sua sponte* issue a certificate of correction reflecting the amount of PTA days determined by the recalculation.

Prior to the issuance of the certificate of correction, the USPTO will afford patentee an opportunity to be heard and request reconsideration. Accordingly, patentee has **one month or thirty (30) days**, whichever is longer, to file a request for reconsideration of this patent term adjustment calculation. See 35 U.S.C. 154(b)(3)(B)(ii) and 37 CFR 1.322(a)(4). No extensions of time will be granted under 37 CFR 1.136.

Patentee should use document code PET.OP if electronically filing a request for reconsideration of this patent term adjustment calculation. The patentee must also include the information required by 37 CFR 1.705(b)(2) and the fee required by 37 CFR 1.18(e). If patentee does not file a timely request for reconsideration of this patent term adjustment calculation including the information required by 37 CFR 1.705(b)(2) and the fee required by 37 CFR 1.18(e), the USPTO will issue a certificate of correction reflecting the PTA determination noted above.

Patentee should be aware that in order to preserve the right to review in the United States District Court for the District of Columbia of the USPTO patent term adjustment determination, patentee must ensure that he or she also take the steps required under 35 U.S.C. 154(b)(4)(A) in a timely manner. Nothing in the request for recalculation should be construed as providing an alternative time frame for commencing a civil action under 35 U.S.C. 154(b)(4)(A).

Any questions concerning this decision should be directed to the Office of Patent Legal Administration at 571-272-7702.

UNITED STATES PATENT AND TRADEMARK OFFICE

UNITED STATES DEPARTMENT OF COMMERCE
United States Patent and Trademark Office
Address: COMMISSIONER FOR PATENTS
P.O. Box 1450
Alexandria, Virginia 22313-1450
www.uspto.gov

APPL NO.	FILING OR 371 (c) DATE	ART UNIT	FIL FEE REC'D	ATTY.DOCKET NO	DRAWINGS	TOT CLMS	IND CLMS
11/141,998	05/31/2005	3761	1130	20050/0202980-US0	22	12	1

CONFIRMATION NO. 5361

CORRECTED FILING RECEIPT

OC000000017060782

07278
DARBY & DARBY P.C.
P. O. BOX 5257
NEW YORK, NY 10150-5257

Date Mailed: 09/20/2005

Receipt is acknowledged of this regular Patent Application. It will be considered in its order and you will be notified as to the results of the examination. Be sure to provide the U.S. APPLICATION NUMBER, FILING DATE, NAME OF APPLICANT, and TITLE OF INVENTION when inquiring about this application. Fees transmitted by check or draft are subject to collection. Please verify the accuracy of the data presented on this receipt. **If an error is noted on this Filing Receipt, please mail to the Commissioner for Patents P.O. Box 1450 Alexandria Va 22313-1450. Please provide a copy of this Filing Receipt with the changes noted thereon. If you received a "Notice to File Missing Parts" for this application, please submit any corrections to this Filing Receipt with your reply to the Notice. When the USPTO processes the reply to the Notice, the USPTO will generate another Filing Receipt incorporating the requested corrections (if appropriate).**

Applicant(s)

Satoshi Mizutani, Kagawa, JAPAN;
Wataru Yoshimasa, Kagawa, JAPAN;
Yuki Noda, Kagawa, JAPAN;

Assignment For Published Patent Application

Uni-Charm Corporation, Shikokuchuo-shi, JAPAN

Power of Attorney: The patent practitioners associated with Customer Number **07278**.

Domestic Priority data as claimed by applicant

Foreign Applications

JAPAN 2004-160160 05/28/2004

If Required, Foreign Filing License Granted: 06/29/2005

The country code and number of your priority application, to be used for filing abroad under the Paris Convention, is US11/141,998

Projected Publication Date: 12/29/2005

Non-Publication Request: No

Early Publication Request: No

Title

Wrapping body

Preliminary Class

604

PROTECTING YOUR INVENTION OUTSIDE THE UNITED STATES

Since the rights granted by a U.S. patent extend only throughout the territory of the United States and have no effect in a foreign country, an inventor who wishes patent protection in another country must apply for a patent in a specific country or in regional patent offices. Applicants may wish to consider the filing of an international application under the Patent Cooperation Treaty (PCT). An international (PCT) application generally has the same effect as a regular national patent application in each PCT-member country. The PCT process **simplifies** the filing of patent applications on the same invention in member countries, but **does not result** in a grant of "an international patent" and does not eliminate the need of applicants to file additional documents and fees in countries where patent protection is desired.

Almost every country has its own patent law, and a person desiring a patent in a particular country must make an application for patent in that country in accordance with its particular laws. Since the laws of many countries differ in various respects from the patent law of the United States, applicants are advised to seek guidance from specific foreign countries to ensure that patent rights are not lost prematurely.

Applicants also are advised that in the case of inventions made in the United States, the Director of the USPTO must issue a license before applicants can apply for a patent in a foreign country. The filing of a U.S. patent application serves as a request for a foreign filing license. The application's filing receipt contains further information and guidance as to the status of applicant's license for foreign filing.

Applicants may wish to consult the USPTO booklet, "General Information Concerning Patents" (specifically, the section entitled "Treaties and Foreign Patents") for more information on timeframes and deadlines for filing foreign patent applications. The guide is available either by contacting the USPTO Contact Center at 800-786-9199, or it can be viewed on the USPTO website at http://www.uspto.gov/web/offices/pac/doc/general/index.html.

For information on preventing theft of your intellectual property (patents, trademarks and copyrights), you may wish to consult the U.S. Government website, http://www.stopfakes.gov. Part of a Department of Commerce initiative, this website includes self-help "toolkits" giving innovators guidance on how to protect intellectual property in specific countries such as China, Korea and Mexico. For questions regarding patent enforcement issues, applicants may call the U.S. Government hotline at 1-866-999-HALT (1-866-999-4158).

LICENSE FOR FOREIGN FILING UNDER
Title 35, United States Code, Section 184
Title 37, Code of Federal Regulations, 5.11 & 5.15

GRANTED

The applicant has been granted a license under 35 U.S.C. 184, if the phrase "IF REQUIRED, FOREIGN FILING LICENSE GRANTED" followed by a date appears on this form. Such licenses are issued in all applications where the conditions for issuance of a license have been met, regardless of whether or not a license may be required as set forth in 37 CFR 5.15. The scope and limitations of this license are set forth in 37 CFR 5.15(a) unless an earlier license has been issued under 37 CFR 5.15(b). The license is subject to revocation upon written notification. The date indicated is the effective date of the license, unless an earlier license of similar scope has been granted under 37 CFR 5.13 or 5.14.

This license is to be retained by the licensee and may be used at any time on or after the effective date thereof unless it is revoked. This license is automatically transferred to any related applications(s) filed under 37 CFR 1.53(d). This license is not retroactive.

The grant of a license does not in any way lessen the responsibility of a licensee for the security of the subject matter as imposed by any Government contract or the provisions of existing laws relating to espionage and the national security or the export of technical data. Licensees should apprise themselves of current regulations especially with respect to certain countries, of other agencies, particularly the Office of Defense Trade Controls, Department of State (with respect to Arms, Munitions and Implements of War (22 CFR 121-128)); the Bureau of Industry and Security, Department of Commerce (15 CFR parts 730-774); the Office of Foreign Assets Control, Department of Treasury (31 CFR Parts 500+) and the Department of Energy.

NOT GRANTED

No license under 35 U.S.C. 184 has been granted at this time, if the phrase "IF REQUIRED, FOREIGN FILING LICENSE GRANTED" DOES NOT appear on this form. Applicant may still petition for a license under 37 CFR 5.12, if a license is desired before the expiration of 6 months from the filing date of the application. If 6 months has lapsed from the filing date of this application and the licensee has not received any indication of a secrecy order under 35 U.S.C. 181, the licensee may foreign file the application pursuant to 37 CFR 5.15(b).

UNITED STATES PATENT AND TRADEMARK OFFICE

UNITED STATES DEPARTMENT OF COMMERCE
United States Patent and Trademark Office
Address: COMMISSIONER FOR PATENTS
P.O. Box 1450
Alexandria, Virginia 22313-1450
www.uspto.gov

APPL NO.	FILING OR 371 (c) DATE	ART UNIT	FIL FEE REC'D	ATTY.DOCKET NO	DRAWINGS	TOT CLMS	IND CLMS
11/142,009	05/31/2005	3761	1130	20050/0202982-US0	10	9	3

CONFIRMATION NO. 5373

CORRECTED FILING RECEIPT

OC000000017060419

07278
DARBY & DARBY P.C.
P. O. BOX 5257
NEW YORK, NY 10150-5257

Date Mailed: 09/20/2005

Receipt is acknowledged of this regular Patent Application. It will be considered in its order and you will be notified as to the results of the examination. Be sure to provide the U.S. APPLICATION NUMBER, FILING DATE, NAME OF APPLICANT, and TITLE OF INVENTION when inquiring about this application. Fees transmitted by check or draft are subject to collection. Please verify the accuracy of the data presented on this receipt. **If an error is noted on this Filing Receipt, please mail to the Commissioner for Patents P.O. Box 1450 Alexandria Va 22313-1450. Please provide a copy of this Filing Receipt with the changes noted thereon. If you received a "Notice to File Missing Parts" for this application, please submit any corrections to this Filing Receipt with your reply to the Notice. When the USPTO processes the reply to the Notice, the USPTO will generate another Filing Receipt incorporating the requested corrections (if appropriate).**

Applicant(s)

Satoshi Mizutani, Kagawa, JAPAN;
Wataru Yoshimasa, Kagawa, JAPAN;
Yuki Noda, Kagawa, JAPAN;

Assignment For Published Patent Application

Uni-Charm Corporation, Shikokuchuo-shi, JAPAN

Power of Attorney: The patent practitioners associated with Customer Number **07278**.

Domestic Priority data as claimed by applicant

Foreign Applications

JAPAN 2004-160161 05/28/2004

If Required, Foreign Filing License Granted: 06/29/2005

The country code and number of your priority application, to be used for filing abroad under the Paris Convention, is US11/142,009

Projected Publication Date: 12/29/2005

Non-Publication Request: No

Early Publication Request: No

Title

Wrapping body

Preliminary Class

604

PROTECTING YOUR INVENTION OUTSIDE THE UNITED STATES

Since the rights granted by a U.S. patent extend only throughout the territory of the United States and have no effect in a foreign country, an inventor who wishes patent protection in another country must apply for a patent in a specific country or in regional patent offices. Applicants may wish to consider the filing of an international application under the Patent Cooperation Treaty (PCT). An international (PCT) application generally has the same effect as a regular national patent application in each PCT-member country. The PCT process **simplifies** the filing of patent applications on the same invention in member countries, but **does not result** in a grant of "an international patent" and does not eliminate the need of applicants to file additional documents and fees in countries where patent protection is desired.

Almost every country has its own patent law, and a person desiring a patent in a particular country must make an application for patent in that country in accordance with its particular laws. Since the laws of many countries differ in various respects from the patent law of the United States, applicants are advised to seek guidance from specific foreign countries to ensure that patent rights are not lost prematurely.

Applicants also are advised that in the case of inventions made in the United States, the Director of the USPTO must issue a license before applicants can apply for a patent in a foreign country. The filing of a U.S. patent application serves as a request for a foreign filing license. The application's filing receipt contains further information and guidance as to the status of applicant's license for foreign filing.

Applicants may wish to consult the USPTO booklet, "General Information Concerning Patents" (specifically, the section entitled "Treaties and Foreign Patents") for more information on timeframes and deadlines for filing foreign patent applications. The guide is available either by contacting the USPTO Contact Center at 800-786-9199, or it can be viewed on the USPTO website at http://www.uspto.gov/web/offices/pac/doc/general/index.html.

For information on preventing theft of your intellectual property (patents, trademarks and copyrights), you may wish to consult the U.S. Government website, http://www.stopfakes.gov. Part of a Department of Commerce initiative, this website includes self-help "toolkits" giving innovators guidance on how to protect intellectual property in specific countries such as China, Korea and Mexico. For questions regarding patent enforcement issues, applicants may call the U.S. Government hotline at 1-866-999-HALT (1-866-999-4158).

LICENSE FOR FOREIGN FILING UNDER
Title 35, United States Code, Section 184
Title 37, Code of Federal Regulations, 5.11 & 5.15

GRANTED

The applicant has been granted a license under 35 U.S.C. 184, if the phrase "IF REQUIRED, FOREIGN FILING LICENSE GRANTED" followed by a date appears on this form. Such licenses are issued in all applications where the conditions for issuance of a license have been met, regardless of whether or not a license may be required as set forth in 37 CFR 5.15. The scope and limitations of this license are set forth in 37 CFR 5.15(a) unless an earlier license has been issued under 37 CFR 5.15(b). The license is subject to revocation upon written notification. The date indicated is the effective date of the license, unless an earlier license of similar scope has been granted under 37 CFR 5.13 or 5.14.

This license is to be retained by the licensee and may be used at any time on or after the effective date thereof unless it is revoked. This license is automatically transferred to any related applications(s) filed under 37 CFR 1.53(d). This license is not retroactive.

The grant of a license does not in any way lessen the responsibility of a licensee for the security of the subject matter as imposed by any Government contract or the provisions of existing laws relating to espionage and the national security or the export of technical data. Licensees should apprise themselves of current regulations especially with respect to certain countries, of other agencies, particularly the Office of Defense Trade Controls, Department of State (with respect to Arms, Munitions and Implements of War (22 CFR 121-128)); the Bureau of Industry and Security, Department of Commerce (15 CFR parts 730-774); the Office of Foreign Assets Control, Department of Treasury (31 CFR Parts 500+) and the Department of Energy.

NOT GRANTED

No license under 35 U.S.C. 184 has been granted at this time, if the phrase "IF REQUIRED, FOREIGN FILING LICENSE GRANTED" DOES NOT appear on this form. Applicant may still petition for a license under 37 CFR 5.12, if a license is desired before the expiration of 6 months from the filing date of the application. If 6 months has lapsed from the filing date of this application and the licensee has not received any indication of a secrecy order under 35 U.S.C. 181, the licensee may foreign file the application pursuant to 37 CFR 5.15(b).

SPE RESPONSE FOR CERTIFICATE OF CORRECTION

Paper No.: _____

DATE : 06/18/09

TO SPE OF : ART UNIT 2833

SUBJECT : Request for Certificate of Correction for Appl. No.: 11/142,016 Patent No.: 7,306,473

Please respond to this request for a certificate of correction within 7 days.

FOR IFW FILES:

Please review the requested changes/corrections as shown in the **COCIN** document(s) in the IFW application image. No new matter should be introduced, nor should the scope or meaning of the claims be changed.

Please complete the response (see below) and forward the completed response to scanning using document code **COCX**.

FOR PAPER FILES:

Please review the requested changes/corrections as shown in the attached certificate of correction. Please complete this form (see below) and forward it with the file to:

Certificates of Correction Branch (CofC)

Randolph Square
Palm Location 7580

Should the changes be made **Valerie Jackson** **Certificates of Correction Branch**

703-756-1573

Thank You For Your Assistance

The request for issuing the above-identified correction(s) is hereby:
Note your decision on the appropriate box.

X Approved	**All** changes apply.
❑ **Approved in Part**	Specify below which changes **do not** apply.
❑ **Denied**	State the reasons for denial below.

Comments: _____

/renee s luebke/ 2833
SPE **Art Unit**

UNITED STATES PATENT AND TRADEMARK OFFICE

OFFICE

COPY MAILED

OCT 24 2006

Director's Office
Office of Patent Publication

CARSTENS & CAHOON, LLP
P. O. BOX 802334
DALLAS, TX 75380

In re Application of	:	
Kenichi Nakama	:	
Application No. 11/142,020	:	**DECISION ON PETITION**
Filed: June 1, 2005	:	
Attorney Docket No. CONDA.00028	:	

This is a decision on the Petition To Withdraw Holding of Abandonment For Failure To Pay Issue Fee, Under 37 C.F.R. § 1.181, received in the United States Patent & Trademark Office (USPTO) on April 11, 2006.

The petition is **DISMISSED**.

The above-identified application was held abandoned for applicant's failure to timely pay the issue fee and Publication fee, as required in the Notice of Allowance and Fee(s) Due mailed November 5, 2006. The Notice of Abandonment, mailed on March 28, 2006 indicates, "The submitted fee of $1,400 is insufficient. A balance of $300 is due."

The Office acknowledges receipt of Part B – Fee(s) Transmittal on January 3, 2006, authorizing that the Issue Fee and Publication Fee be charged to Deposit Account No. 50-0392. On January 4, 2006, when an attempt was made by the Accounting Technician in the Office of Initial Patent Examinations (OIPE) to charge the fees, there were insufficient funds in the Deposit Account.

37 CFR 1.25 (a) and (b), which states in part:

> 1.25(a) ...An amount sufficient to cover all fee, services, copies, etc., requested must always be on deposit. Charges to accounts with insufficient funds will not be accepted."

> 1.25 (b) ...An authorization to charge a fee to a deposit account will not be considered payment of the fee on the date the authorization to charge the fee is effective as to the particular fee to be charged unless sufficient funds are present in the account to cover the fee.

In light of the non-compliance with 37 CFR 1.25, the holding of abandonment cannot be withdrawn.

Applicant may seek relief by filing a petition for Revival of Abandoned Application under CFR § 1.137 (a) or (b). (Forms are available at USPTO website http://www.uspto.gov)

- Under 37 CFR 1.137(a), a petition for the revival of an ***unavoidable*** abandoned application
- Under 37 CFR 1.137(b), a petition for the revival of an ***unintentionally*** abandoned application

Further inquiries with respect to filing a petition under 37 CFR § 1.137 may be directed to the Office of Petitions at 571-272-3282 or addressed as follows:

By mail: Mail Stop Petitions
Commissioner for Patents
Office of Petitions
P O Box 1450
Alexandria, VA 22313-1450

Telephone inquires concerning this decision matter may be directed to the undersigned at 703-308-9250 ext. 167.

Brenda J. Moore

Brenda J. Moore
Quality Operations Assistant
Office of the Director
Office of Patent Publications

UNITED STATES PATENT AND TRADEMARK OFFICE

COMMISSIONER FOR PATENTS
UNITED STATES PATENT AND TRADEMARK OFFICE
P.O. BOX 1450
ALEXANDRIA, VA 22313-1450
www.uspto.gov

CARSTENS & CAHOON, LLP
P O BOX 802334
DALLAS, TX 75380

COPY MAILED

MAY 02 2007

OFFICE OF PETITIONS

In re Application of	:	
NAKAMA	:	
Application No.: 11/142,020	:	DECISION ON PETITION
Filing Date: June 1, 2005	:	UNDER 37 CFR 1.137(B)
Attorney Docket No.: CONDA.00028	:	

This is a decision on the petition under 37 CFR 1.137(b), filed November 21, 2006, to revive the above-identified application.

The petition is **GRANTED.**

The above-identified application became abandoned for failure to submit the publication fee in a timely manner in reply to the Notice of Allowance mailed November 15, 2005, which set a statutory period for reply of three (3) months. Accordingly, by operation of law, the above-identified application became abandoned on February 16, 2006.

The petition satisfies the conditions for revival pursuant to the provisions of 37 CFR 1.137(b) in that (1) the reply in the form of payment of the publication fee; (2) the petition fee; and (3) the required statement of unintentional delay have been received. Accordingly, the payment of the publication fee is accepted as having been unintentionally delayed.

With further regard to the statement in the petition that the "delay in timely paying the Publication Fee as required by 37 CFR 1.18(d) was unintentional", this statement is interpreted as a statement that the entire delay in filing the required reply from the due date for the reply until the filing of a grantable petition under 37 CFR 1.137(b) was unintentional. If this is an incorrect interpretation in view of the rules, petitioner is required to provide a statement to that effect.

This application is being referred to the Office of Publications.

Telephone inquiries concerning this decision should be directed to the undersigned at (571) 272-3303.

Bryan Lin

Bryan Lin
Legal Examiner
Office of the Deputy Commissioner
for Patent Examination Policy

UNITED STATES PATENT AND TRADEMARK OFFICE

UNITED STATES DEPARTMENT OF COMMERCE
United States Patent and Trademark Office
Address: COMMISSIONER FOR PATENTS
P.O. Box 1450
Alexandria, Virginia 22313-1450
www.uspto.gov

SCHWEGMAN, LUNDBERG & WOESSNER, P.A.
P.O. BOX 2938
MINNEAPOLIS, MN 55402

Mail Date: 04/20/2010

Applicant	: Mark A. Schwartz	: DECISION ON REQUEST FOR
Patent Number	: 7573399	: RECALCULATION of PATENT
Issue Date	: 08/11/2009	: TERM ADJUSTMENT IN VIEW
Appliction No	: 11/142,021	: OF WYETH AND NOTICE OF INTENT TO
Filed	: 06/01/2005	: ISSUE CERTIFICATE OF CORRECTION
		:

The Request for Recalculation is **GRANTED** to the extent indicated.

The patent term adjustment has been determined to be **12** days. The USPTO will *sua sponte* issue a certificate of correction reflecting the amount of PTA days determined by the recalculation.

Prior to the issuance of the certificate of correction, the USPTO will afford patentee an opportunity to be heard and request reconsideration. Accordingly, patentee has **one month or thirty (30) days**, whichever is longer, to file a request for reconsideration of this patent term adjustment calculation. See 35 U.S.C. 154(b)(3)(B)(ii) and 37 CFR 1.322(a)(4). No extensions of time will be granted under 37 CFR 1.136.

Patentee should use document code PET.OP if electronically filing a request for reconsideration of this patent term adjustment calculation. The patentee must also include the information required by 37 CFR 1.705(b)(2) and the fee required by 37 CFR 1.18(e). If patentee does not file a timely request for reconsideration of this patent term adjustment calculation including the information required by 37 CFR 1.705(b)(2) and the fee required by 37 CFR 1.18(e), the USPTO will issue a certificate of correction reflecting the PTA determination noted above.

Patentee should be aware that in order to preserve the right to review in the United States District Court for the District of Columbia of the USPTO patent term adjustment determination, patentee must ensure that he or she also take the steps required under 35 U.S.C. 154(b)(4)(A) in a timely manner. Nothing in the request for recalculation should be construed as providing an alternative time frame for commencing a civil action under 35 U.S.C. 154(b)(4)(A).

Any questions concerning this decision should be directed to the Office of Patent Legal Administration at 571-272-7702.

UNITED STATES PATENT AND TRADEMARK OFFICE

UNITED STATES DEPARTMENT OF COMMERCE
United States Patent and Trademark Office
Address: COMMISSIONER FOR PATENTS
P.O. Box 1450
Alexandria, Virginia 22313-1450
www.uspto.gov

BURNS & LEVINSON, LLP
125 SUMMER STREET
BOSTON, MA 02110

Mail Date: 04/20/2010

Applicant	: Prasad Pamidi	: DECISION ON REQUEST FOR
Patent Number	: 7632672	: RECALCULATION of PATENT
Issue Date	: 12/15/2009	: TERM ADJUSTMENT IN VIEW
Appliction No	: 11/142,024	: OF WYETH AND NOTICE OF INTENT TO
Filed	: 06/01/2005	: ISSUE CERTIFICATE OF CORRECTION
		:

The Request for Recalculation is **GRANTED** to the extent indicated.

The patent term adjustment has been determined to be **356** days. The USPTO will *sua sponte* issue a certificate of correction reflecting the amount of PTA days determined by the recalculation.

Prior to the issuance of the certificate of correction, the USPTO will afford patentee an opportunity to be heard and request reconsideration. Accordingly, patentee has **one month or thirty (30) days**, whichever is longer, to file a request for reconsideration of this patent term adjustment calculation. See 35 U.S.C. 154(b)(3)(B)(ii) and 37 CFR 1.322(a)(4). No extensions of time will be granted under 37 CFR 1.136.

Patentee should use document code PET.OP if electronically filing a request for reconsideration of this patent term adjustment calculation. The patentee must also include the information required by 37 CFR 1.705(b)(2) and the fee required by 37 CFR 1.18(e). If patentee does not file a timely request for reconsideration of this patent term adjustment calculation including the information required by 37 CFR 1.705(b)(2) and the fee required by 37 CFR 1.18(e), the USPTO will issue a certificate of correction reflecting the PTA determination noted above.

Patentee should be aware that in order to preserve the right to review in the United States District Court for the District of Columbia of the USPTO patent term adjustment determination, patentee must ensure that he or she also take the steps required under 35 U.S.C. 154(b)(4)(A) in a timely manner. Nothing in the request for recalculation should be construed as providing an alternative time frame for commencing a civil action under 35 U.S.C. 154(b)(4)(A).

Any questions concerning this decision should be directed to the Office of Patent Legal Administration at 571-272-7702.

UNITED STATES PATENT AND TRADEMARK OFFICE

UNITED STATES DEPARTMENT OF COMMERCE
United States Patent and Trademark Office
Address: COMMISSIONER FOR PATENTS
P.O. Box 1450
Alexandria, Virginia 22313-1450
www.uspto.gov

BRINKS HOFER GILSON & LIONE
P.O. BOX 10395
CHICAGO, IL 60610

Mail Date: 05/20/2010

Applicant	: Flemming S. Andreasen	: DECISION ON REQUEST FOR
Patent Number	: 7620708	: RECALCULATION of PATENT
Issue Date	: 11/17/2009	: TERM ADJUSTMENT IN VIEW
Application No	: 11/142,031	: OF WYETH AND NOTICE OF INTENT TO
Filed	: 05/31/2005	: ISSUE CERTIFICATE OF CORRECTION
		:

The Request for Recalculation is **GRANTED** to the extent indicated.

The patent term adjustment has been determined to be **1024** days. The USPTO will *sua sponte* issue a certificate of correction reflecting the amount of PTA days determined by the recalculation.

Prior to the issuance of the certificate of correction, the USPTO will afford patentee an opportunity to be heard and request reconsideration. Accordingly, patentee has **one month or thirty (30) days**, whichever is longer, to file a request for reconsideration of this patent term adjustment calculation. See 35 U.S.C. 154(b)(3)(B)(ii) and 37 CFR 1.322(a)(4). No extensions of time will be granted under 37 CFR 1.136.

Patentee should use document code PET.OP if electronically filing a request for reconsideration of this patent term adjustment calculation. The patentee must also include the information required by 37 CFR 1.705(b)(2) and the fee required by 37 CFR 1.18(e). If patentee does not file a timely request for reconsideration of this patent term adjustment calculation including the information required by 37 CFR 1.705(b)(2) and the fee required by 37 CFR 1.18(e), the USPTO will issue a certificate of correction reflecting the PTA determination noted above.

Patentee should be aware that in order to preserve the right to review in the United States District Court for the District of Columbia of the USPTO patent term adjustment determination, patentee must ensure that he or she also take the steps required under 35 U.S.C. 154(b)(4)(A) in a timely manner. Nothing in the request for recalculation should be construed as providing an alternative time frame for commencing a civil action under 35 U.S.C. 154(b)(4)(A).

Any questions concerning this decision should be directed to the Office of Patent Legal Administration at 571-272-7702.

UNITED STATES PATENT AND TRADEMARK OFFICE

Commissioner for Patents
United States Patent and Trademark Office
P.O. Box 1450
Alexandria, VA 22313-1450
www.uspto.gov

OSTROLENK FABER GERB & SOFFEN
1180 AVENUE OF THE AMERICAS
NEW YORK NY 10036-8403

COPY MAILED

DEC 0 5 2005

OFFICE OF PETITIONS

In re Application of	:	
Okada, Tsutomu	:	
Application No. 11/142,033	:	ON PETITION
Filed: May 31, 2005	:	
Attorney Docket No. P/33-69	:	

This is a decision on the petition filed September 19, 2005, requesting that the above-identified application be accorded a filing date of May 31, 2005, rather than the presently accorded date of June 1, 2005. The petition is properly treated as a petition under 37 CFR 1.10(d).

Applicant requests the earlier filing date on the basis that the application was purportedly deposited with the U.S. Postal Service (USPS) as Express Mail on May 31, 2005, pursuant to 37 CFR 1.10. In support, applicant has submitted a copy of Express Mail label No. EV 606167606 US, showing an incorrect handwritten "date-in" of "June 1, 2005." The same Express Mail receipt number appears on the original transmittal letter. The Express Mail label number appears on the Certificate of Mailing by "Express Mail" and includes a statement of express mailing dated May 31, 2005 on the transmittal letter. Additionally, applicant has submitted a copy of the Pick Up Service Statement, showing the date of pickup as "May 31, 2005," which includes Express Mail label No. EV 606167606 US. Further, the Express Mail Corporate Account Mailing Statement illustrates that three of the seven Express Mail packages indicated on the Pick Up Service Statement were accorded a "date-in" of "May 31, 2005," while the remaining four were accorded a "date-in" of June 1, 2005."

Therefore, in view of the above evidence, it is concluded that the application was deposited in Express Mail service on May 31, 2005.

The petition is **GRANTED**.

A petition under 37 CFR 1.10(d) does not require a petition fee and none has been charged.

This matter is being referred to the Office of Initial Patent Examination Division for further **processing with a filing date of May 31, 2005, along with a corrected filing receipt.** Thereafter, the matter will be referred to Technology Center 3700 for examination in due course.

Telephone inquiries concerning this matter may be directed Paralegal Liana Chase at (571) 272-3206.

Frances Hicks
Petitions Examiner
Office of Petitions

UNITED STATES PATENT AND TRADEMARK OFFICE

Commissioner for Patents
United States Patent and Trademark Office
P.O. Box 1450
Alexandria, VA 22313-1450
www.uspto.gov

glm

6-15-07

In re application of William Telander Serial No. 11/142,035 Filed: June 1, 2005 For: BASALT PARTICLE-CONTAINING COMPOSITIONS AND ARTICLES FOR PROTECTIVE COATINGS AND BALLISTIC SHIELD MATS/TILES/PROTECTIVE BUILDING COMPONENTS	:	DECISION ON PETITION TO MAKE SPECIAL

This is a decision on the petition filed on April 30, 2007 to make the above-identified application special.

The petition to make the application special is **DENIED.**

REGULATION AND PRACTICE

Pursuant to the "Changes to Practice for Petitions in Patent Applications to Make Special and for Accelerated Examination" published in the Federal Register on June 26, 2006 (71 Fed. Reg. 36323), all petitions to make special, except those based on applicant's health or age or the PPH pilot, filed on or after August 25, 2006 are required to comply with the requirements of petitions to make special under the accelerated examination program. Note that any petition to make special under MPEP § 708.02, based solely on subsection XI (Terrorism) was required to be filed prior to August 25, 2006.

To be eligible for accelerated examination under 37 C.F.R. § 1.102(d) and pursuant to the "Changes to Practice for Petitions in Patent Applications to Make Special and for Accelerated Examination" published in the Federal Register on June 26, 2006 (71 Fed. Reg. 36323), the following conditions must be satisfied:

1. The application must be a non-reissue utility or design application filed under 37 CFR 1.111(a) on or after August 25, 2006;
2. The application, the petition and the required fees must be filed electronically using the USPTO's electronic filing system (EFS), or EFS-web; if not filed electronically, a statement asserting that EFS and EFS-web were not available during the normal business hours;

3. The application, at the time of filing, must be complete under 37 CFR 1.51 and in condition for examination;
4. The application must contain three or fewer independent claims and twenty or fewer total claims and the claims must be directed to a single invention.

The application as filed is not eligible for accelerated examination under 37 C.F.R. § 1.102(d) because it was not filed electronically, was filed with 92 claims including 9 indpendent claims, and was filed before August 25, 2006. Further, in accordance with MPEP 708.02(a), section I, A, the petition to make special must be filed with the application. Here, the petition to make special was submitted on April 30, 2007, while the application was filed on June 1, 2005.

For the above-stated reasons, the petition is denied. The application will therefore be taken up by the examiner for action in its regular turn.

Any inquiry regarding this decision should be directed to Gregory Mills, Quality Assurance Specialist, at (571) 272-1439.

Gregory Mills
Quality Assurance Specialist
Technology Center 1700

MARSHALL, GERSTEIN & BORUN LLP
233 S. WACKER DRIVE, SUITE 6300
SEARS TOWER
CHICAGO IL 60606

UNITED STATES PATENT AND TRADEMARK OFFICE

Commissioner for Patents
United States Patent and Trademark Office
P.O. Box 1450
Alexandria, VA 22313-1450
www.uspto.gov

MAILED

MAY 2 1 2010

OFFICE OF PETITIONS

MICROSOFT CORPORATION
ONE MICROSOFT WAY
BEDMOND WA 980520

In re Application of	:	
Thanu et al	:	
Application No. 11/142,064	:	DECISION ON PETITION
Filed: May 31, 2005	:	
Attorney Docket No. 310105.01	:	

This is a decision on the petition under the unintentional provisions of 37 CFR 1.137(b), filed January 28, 2009, to revive the above-identified application.

The petition is **GRANTED**.

The petition satisfies the conditions for revival pursuant to the provisions of 37 CFR 1.137(b) in that (1) the reply in the form of an RCE and an amendment; (2) the petition fee; and (3) the required statement of unintentional delay have been received. Accordingly, the reply to the final rejection mailed July 8, 2008, is accepted as having been unintentionally delayed.

An extension of time under 37 CFR 1.136 must be filed prior to the expiration of the maximum extendable period for reply. *See* In re Application of S., 8 USPQ2d 1630, 1631 (Comm'r Pats. 1988). Therefore, the request for an extension of time is unnecessary.

It is not apparent whether the person signing the statement of unintentional delay was in a position to have firsthand or direct knowledge of the facts and circumstances of the delay at issue. Nevertheless, such statement is being treated as having been made as the result of a reasonable inquiry into the facts and circumstances of such delay. See 37 CFR 10.18(b) and Changes to Patent Practice and Procedure; Final Rule Notice, 62 Fed. Reg. 53131, 53178 (October 10, 1997), 1203 Off. Gaz. Pat. Office 63, 103 (October 21, 1997). In the event that such an inquiry has not been made, petitioner must make such an inquiry. If such inquiry results in the discovery that it is not correct that the entire delay in filing the required reply from the due date for the reply until the filing of a grantable petition pursuant to 37 CFR 1.137(b) was unintentional, petitioner must notify the Office.

There is no indication that the person signing the petition was ever given a power of attorney to prosecute the application. If the person signing the petition desires to receive future

correspondence regarding this application, the appropriate power of attorney document must be submitted. While a courtesy copy of this decision is being mailed to the person signing the petition, all future correspondence will be directed to the address currently of record until appropriate instructions are received.

Telephone inquiries concerning this decision should be directed to the undersigned at (571) 272-3208.

This application is being referred to Technology Center AU 2176 for appropriate action by the Examiner in the normal course of business on the reply received January 28, 2009.

/KOC/
Karen Creasy
Petitions Examiner
Office of Petitions

cc:

JAMES STROM
22317 NE 160TH PL
WOODINVILLE, WA 98077

UNITED STATES PATENT AND TRADEMARK OFFICE

UNITED STATES DEPARTMENT OF COMMERCE
United States Patent and Trademark Office
Address: COMMISSIONER FOR PATENTS
P.O. Box 1450
Alexandria, Virginia 22313-1450
www.uspto.gov

HITACHI GLOBAL STORAGE TECHNOLOGIES, INC.
5600 COTTLE ROAD, NHGB/0142
IP DEPARTMENT
SAN JOSE, CA 95193

Mail Date: 04/22/2010

Applicant	: Shingo Tsuda	: DECISION ON REQUEST FOR
Patent Number	: 7606004	: RECALCULATION of PATENT
Issue Date	: 10/20/2009	: TERM ADJUSTMENT IN VIEW
Appliction No	: 11/142,065	: OF WYETH AND NOTICE OF INTENT TO
Filed	: 05/31/2005	: ISSUE CERTIFICATE OF CORRECTION
		:

The Request for Recalculation is **GRANTED** to the extent indicated.

The patent term adjustment has been determined to be **1125** days. The USPTO will *sua sponte* issue a certificate of correction reflecting the amount of PTA days determined by the recalculation.

Prior to the issuance of the certificate of correction, the USPTO will afford patentee an opportunity to be heard and request reconsideration. Accordingly, patentee has **one month or thirty (30) days**, whichever is longer, to file a request for reconsideration of this patent term adjustment calculation. See 35 U.S.C. 154(b)(3)(B)(ii) and 37 CFR 1.322(a)(4). No extensions of time will be granted under 37 CFR 1.136.

Patentee should use document code PET.OP if electronically filing a request for reconsideration of this patent term adjustment calculation. The patentee must also include the information required by 37 CFR 1.705(b)(2) and the fee required by 37 CFR 1.18(e). If patentee does not file a timely request for reconsideration of this patent term adjustment calculation including the information required by 37 CFR 1.705(b)(2) and the fee required by 37 CFR 1.18(e), the USPTO will issue a certificate of correction reflecting the PTA determination noted above.

Patentee should be aware that in order to preserve the right to review in the United States District Court for the District of Columbia of the USPTO patent term adjustment determination, patentee must ensure that he or she also take the steps required under 35 U.S.C. 154(b)(4)(A) in a timely manner. Nothing in the request for recalculation should be construed as providing an alternative time frame for commencing a civil action under 35 U.S.C. 154(b)(4)(A).

Any questions concerning this decision should be directed to the Office of Patent Legal Administration at 571-272-7702.

DATE: 8-8-07 APPLICATION NUMBER: 11/142,068

DOC CODE: Ret, Rec, TC DOC DATE: _____

DELIVER THE ATTACHED FILE/DOCUMENT TO THE TC SCANNIG CENETER

CONTRACTOR: THE ATTACHED FILE/DOCUMENT MUST BE INDEXED AND SCANNED INTO IFW WITHIN 8 WORK HOURS; UPLOADING OF THE SCANNED IMAGES SHOULD OCCUR NO LATER THAN 16 WORK HOURS FOLLOWING RECEIPT OF THIS REQUEST

AFTER SCANNING, ORIGINAL DOCUMENTS SHOULD BE BOXED IN ACCORDANCE WITH INSTRUCTIONS

UNITED STATES PATENT AND TRADEMARK OFFICE

Commissioner for Patents
United States Patent and Trademark Office
P.O. Box 1450
Alexandria, VA 22313-1450
www.uspto.gov

CNH AMERICA LLC
INTELLECTUAL PROPERTY LAW
DEPARTMENT
700 STATE STREET
RACINE WI 53404

COPY MAILED

AUG 09 2007

OFFICE OF PETITIONS

In re Application of	:	
Summach et al.	:	
Application No. 11/142068	:	
Filing or 371(c) Date: 06/01/2005	:	ON PETITION
Attorney Docket Number: FC0063-1	:	

This is a decision on the third petition to revive the application under 37 CFR 1.137(b), filed March 7, 2007, to revive the above-identified application. The delay in treating this petition is regretted.

This Petition is hereby **granted**.

Background

The above-identified application became abandoned for failure to timely reply to the final office action, mailed March 6, 2006. The Office action set a three (3) period for reply. Extensions of time under 37 CFR 1.136(a) were available. Applicant filed an Amendment and Terminal Disclaimer (TD) in response to the Office action on May 19, 2006; however, the TD was improper. Applicant was so notified in an Advisory Action mailed June 8, 2006. Applicant filed a second TD in response to the Advisory Action on June 29, 2006; however, the TD was again improper. Applicant was so notified in a second Advisory Action mailed August 29, 2006. No complete and proper reply having been received, the application became abandoned June 7, 2006. A Notice of Abandonment was mailed October 19, 2006.

The present petition

Applicant files the present petition and includes an Amendment and TD in response to the Office action. The TD has been approved. The petition satisfies the conditions for revival pursuant to the provisions of 37 CFR 1.137(b) in that (1) the reply in the form of an Amendment is filed with the present petition; (2) the petition fee; and (3) the required statement of unintentional delay. Accordingly, the reply is accepted as having been unintentionally delayed.

This application is being referred to Technology Center Art Unit 3641 for processing of the Amendment and TD filed with the petition in due course.

Telephone inquiries concerning this decision should be directed to the undersigned at (571) 272-3232.

Derek L. Woods
Attorney
Office of Petitions

UNITED STATES PATENT AND TRADEMARK OFFICE

Commissioner for Patents
United States Patent and Trademark Office
P.O. Box 1450
Alexandria, VA 22313-1450
www.uspto.gov

Jeffrey T. Haley
13434 SE 27th Place
Bellevue WA 98005

COPY MAILED

SEP 1 0 2009

OFFICE OF PETITIONS

In re Application of	:	
Philip F. Lanzafame	:	
Application No. 11/142,080	:	DECISION ON PETITION
Filed: May 31, 2005	:	TO WITHDRAW
Attorney Docket No. **1211-005-03**	:	FROM RECORD
	:	

This is a decision on the Request to Withdraw as attorney or agent of record under 37 CFR § 1.36(b), filed May 26, 2009.

The request is **APPROVED**.

A grantable request to withdraw as attorney/agent of record must be signed by every attorney/agent seeking to withdraw or contain a clear indication that one attorney is signing on behalf of another/others.

The request was signed by Jeffrey T. Haley on behalf of all attorneys of record who are associated with Customer Number 84145.

All attorneys/agents associated with the Customer Number 84145 have been withdrawn.

Applicant is reminded that there is no attorney of record at this time.

All future correspondence will be directed to the first name inventor Philip F. Lanzafame at the address list listed in the request.

Telephone inquiries concerning this decision should be directed to the undersigned at 571-272-4584.

JoAnne Burke
Petitions Examiner
Office of Petitions

cc: Philip F. Lanzafame
PO BOX 2834
Paulsbo, WA 98370

UNITED STATES PATENT AND TRADEMARK OFFICE

UNITED STATES DEPARTMENT OF COMMERCE
United States Patent and Trademark Office
Address: COMMISSIONER FOR PATENTS
P.O. Box 1450
Alexandria, Virginia 22313-1450
www.uspto.gov

APPLICATION NUMBER	FILING OR 371(C) DATE	FIRST NAMED APPLICANT	ATTY. DOCKET NO./TITLE
11/142,080	05/31/2005	Philip F. Lanzafame	1211-005-03

CONFIRMATION NO. 6169

POWER OF ATTORNEY NOTICE

84145
Jeffrey T. Haley
13434 SE 27th Place
Bellevue, WA 98005

OC000000037739136

Date Mailed: 09/10/2009

NOTICE REGARDING CHANGE OF POWER OF ATTORNEY

This is in response to the Power of Attorney filed 05/27/2009.

- The withdrawal as attorney in this application has been accepted. Future correspondence will be mailed to the new address of record. 37 CFR 1.33.

/jlburke/

Office of Data Management, Application Assistance Unit (571) 272-4000, or (571) 272-4200, or 1-888-786-0101

SPE RESPONSE FOR CERTIFICATE OF CORRECTION

DATE : 8-2-07

Paper No.: _____

TO SPE OF : ART UNIT 3745

SUBJECT : Request for Certificate of Correction for Appl. No. 7210394 B2 C11/142090

Please respond to this request for a certificate of correction within 7 days.

Please review the requested changes/corrections as shown in the **COCIN** document(s) in the IFW application image. No new matter should be introduced, nor should the scope or meaning of the claims be changed.

Please complete the response (see below) and forward the completed response to scanning using document code **COCX**.

Response needed A/S/AP

Ella James

Certificates of Correction Branch

703-308-9390 ext. 116

Thank You For Your Assistance

The request for issuing the above-identified correction(s) is hereby:

Note your decision on the appropriate box.

- ☒ **Approved** — **All** changes apply.
- ☐ **Approved in Part** — Specify below which changes **do not** apply.
- ☐ **Denied** — State the reasons for denial below.

Comments: _____

Ed Tech

SPE

3745

Art Unit

UNITED STATES PATENT AND TRADEMARK OFFICE

UNITED STATES DEPARTMENT OF COMMERCE
United States Patent and Trademark Office
Address: COMMISSIONER FOR PATENTS
P.O. Box 1450
Alexandria, Virginia 22313-1450
www.uspto.gov

SNELL & WILMER LLP (OC)
600 ANTON BOULEVARD
SUITE 1400
COSTA MESA, CA 92626

Mail Date: 04/21/2010

Applicant	: Kevin P. Hanrahan	: DECISION ON REQUEST FOR
Patent Number	: 7611303	: RECALCULATION of PATENT
Issue Date	: 11/03/2009	: TERM ADJUSTMENT IN VIEW
Appliction No	: 11/142,096	: OF WYETH AND NOTICE OF INTENT TO
Filed	: 06/01/2005	: ISSUE CERTIFICATE OF CORRECTION
		:

The Request for Recalculation is **GRANTED** to the extent indicated.

The patent term adjustment has been determined to be **205** days. The USPTO will *sua sponte* issue a certificate of correction reflecting the amount of PTA days determined by the recalculation.

Prior to the issuance of the certificate of correction, the USPTO will afford patentee an opportunity to be heard and request reconsideration. Accordingly, patentee has **one month or thirty (30) days**, whichever is longer, to file a request for reconsideration of this patent term adjustment calculation. See 35 U.S.C. 154(b)(3)(B)(ii) and 37 CFR 1.322(a)(4). No extensions of time will be granted under 37 CFR 1.136.

Patentee should use document code PET.OP if electronically filing a request for reconsideration of this patent term adjustment calculation. The patentee must also include the information required by 37 CFR 1.705(b)(2) and the fee required by 37 CFR 1.18(e). If patentee does not file a timely request for reconsideration of this patent term adjustment calculation including the information required by 37 CFR 1.705(b)(2) and the fee required by 37 CFR 1.18(e), the USPTO will issue a certificate of correction reflecting the PTA determination noted above.

Patentee should be aware that in order to preserve the right to review in the United States District Court for the District of Columbia of the USPTO patent term adjustment determination, patentee must ensure that he or she also take the steps required under 35 U.S.C. 154(b)(4)(A) in a timely manner. Nothing in the request for recalculation should be construed as providing an alternative time frame for commencing a civil action under 35 U.S.C. 154(b)(4)(A).

Any questions concerning this decision should be directed to the Office of Patent Legal Administration at 571-272-7702.

UNITED STATES PATENT AND TRADEMARK OFFICE

Commissioner for Patents
United States Patent and Trademark Office
P.O. Box 1450
Alexandria, VA 22313-1450
www.uspto.gov

MAILED

JAN 19 2010

OFFICE OF PETITIONS

Merchant & Gould PC
P.O. Box 2903
Minneapolis, MN 55402-0903

In re Application of	:	
Valerie Andre et al.	:	
Application No. 11/142,113	:	DECISION ON PETITION
Filed: June 1, 2005	:	
Attorney Docket No. 11123.0016USD1	:	

This is a decision on the petition under the unintentional provisions of 37 CFR 1.137(b), filed November 13, 2009, to revive the above-identified application.

The petition is **GRANTED**.

The application became abandoned as a result of petitioner's failure to file an appeal brief (and fee required by 37 CFR 41.20(b)(2)) within the time period provided in 37 CFR 41.37(a)(1). As an appeal brief (and appeal brief fee) was not filed within two (2) months of the Notice of Appeal filed January 2, 2009. A three month extension of time under the provisions of 37 CFR 1.136(a) was obtained. The appeal was dismissed and the proceedings as to the rejected claims were terminated. See 37 CFR 41.37(b). As no claim was allowed, the application became abandoned on March 3, 2009. See MPEP 1215.04. A Notice of Abandonment was mailed on August 31, 2009.

The petition satisfies the requirements of 37 CFR 1.137(b) in that petitioner has supplied (1) the reply in the form of a RCE, with the required fee of $810, (2) the petition fee of $1,620, and (3) a proper statement of unintentional delay. Accordingly the RCE is accepted as being unintentionally delayed.

It is not apparent whether the person signing the statement of unintentional delay was in a position to have firsthand or direct knowledge of the facts and circumstances of the delay at issue. Nevertheless, such statement is being treated as having been made as the result of a reasonable inquiry into the facts and circumstances of such delay. See 37 CFR 10.18(b) and Changes to Patent Practice and Procedure; Final Rule Notice, 62 Fed. Reg. 53131, 53178 (October 10, 1997), 1203 Off. Gaz. Pat. Office 63, 103 (October 21, 1997). In the event that such an inquiry has not been made, petitioner must make such an inquiry. If such inquiry results

in the discovery that it is not correct that the entire delay in filing the required reply from the due date for the reply until the filing of a grantable petition pursuant to 37 CFR 1.137(b) was unintentional, petitioner must notify the Office.

The application file does not indicate a change of address has been filed in this case, although the address given on the petition differs from the address of record. A change of address should be filed in this case in accordance with MPEP 601.03. A courtesy copy of this decision is being mailed to the address noted on the petition. However, until otherwise instructed, all future correspondence regarding this application will be mailed solely to the address of record.

Telephone inquiries concerning this decision should be directed to Kimberly Inabinet at (571) 272-4618.

This application is being referred to the Technology Center AU 1657 for appropriate action in the normal course of business for processing of the RCE received November 13, 2009.

/Kimberly A. Inabinet/

Kimberly A. Inabinet
Petitions Examiner
Office of Petitions

cc: Frank Chau
F. Chau & Associates, LLC
130 Woodbury Road
Woodbury, NY 11797

UNITED STATES PATENT AND TRADEMARK OFFICE

UNITED STATES DEPARTMENT OF COMMERCE
United States Patent and Trademark Office
Address: COMMISSIONER FOR PATENTS
P.O. Box 1450
Alexandria, Virginia 22313-1450
www.uspto.gov

GUERIN & RODRIGUEZ, LLP
5 MOUNT ROYAL AVENUE
MOUNT ROYAL OFFICE PARK
MARLBOROUGH, MA 01752

Mail Date: 04/21/2010

Applicant	: Emre Gunduzhan	: DECISION ON REQUEST FOR
Patent Number	: 7586848	: RECALCULATION of PATENT
Issue Date	: 09/08/2009	: TERM ADJUSTMENT IN VIEW
Appliction No	: 11/142,125	: OF WYETH AND NOTICE OF INTENT TO
Filed	: 06/01/2005	: ISSUE CERTIFICATE OF CORRECTION
		:

The Request for Recalculation is **GRANTED** to the extent indicated.

The patent term adjustment has been determined to be **1133** days. The USPTO will *sua sponte* issue a certificate of correction reflecting the amount of PTA days determined by the recalculation.

Prior to the issuance of the certificate of correction, the USPTO will afford patentee an opportunity to be heard and request reconsideration. Accordingly, patentee has **one month or thirty (30) days**, whichever is longer, to file a request for reconsideration of this patent term adjustment calculation. See 35 U.S.C. 154(b)(3)(B)(ii) and 37 CFR 1.322(a)(4). No extensions of time will be granted under 37 CFR 1.136.

Patentee should use document code PET.OP if electronically filing a request for reconsideration of this patent term adjustment calculation. The patentee must also include the information required by 37 CFR 1.705(b)(2) and the fee required by 37 CFR 1.18(e). If patentee does not file a timely request for reconsideration of this patent term adjustment calculation including the information required by 37 CFR 1.705(b)(2) and the fee required by 37 CFR 1.18(e), the USPTO will issue a certificate of correction reflecting the PTA determination noted above.

Patentee should be aware that in order to preserve the right to review in the United States District Court for the District of Columbia of the USPTO patent term adjustment determination, patentee must ensure that he or she also take the steps required under 35 U.S.C. 154(b)(4)(A) in a timely manner. Nothing in the request for recalculation should be construed as providing an alternative time frame for commencing a civil action under 35 U.S.C. 154(b)(4)(A).

Any questions concerning this decision should be directed to the Office of Patent Legal Administration at 571-272-7702.

UNITED STATES PATENT AND TRADEMARK OFFICE

UNITED STATES DEPARTMENT OF COMMERCE
United States Patent and Trademark Office
Address: COMMISSIONER FOR PATENTS
P.O. Box 1450
Alexandria, Virginia 22313-1450
www.uspto.gov

GUERIN & RODRIGUEZ, LLP
5 MOUNT ROYAL AVENUE
MOUNT ROYAL OFFICE PARK
MARLBOROUGH, MA 01752

Mail Date: 04/21/2010

Applicant	: Emre Gunduzhan	: DECISION ON REQUEST FOR
Patent Number	: 7586848	: RECALCULATION of PATENT
Issue Date	: 09/08/2009	: TERM ADJUSTMENT IN VIEW
Appliction No	: 11/142,125	: OF WYETH AND NOTICE OF INTENT TO
Filed	: 06/01/2005	: ISSUE CERTIFICATE OF CORRECTION
		:

The Request for Recalculation is **GRANTED** to the extent indicated.

The patent term adjustment has been determined to be **1133** days. The USPTO will *sua sponte* issue a certificate of correction reflecting the amount of PTA days determined by the recalculation.

Prior to the issuance of the certificate of correction, the USPTO will afford patentee an opportunity to be heard and request reconsideration. Accordingly, patentee has **one month or thirty (30) days**, whichever is longer, to file a request for reconsideration of this patent term adjustment calculation. See 35 U.S.C. 154(b)(3)(B)(ii) and 37 CFR 1.322(a)(4). No extensions of time will be granted under 37 CFR 1.136.

Patentee should use document code PET.OP if electronically filing a request for reconsideration of this patent term adjustment calculation. The patentee must also include the information required by 37 CFR 1.705(b)(2) and the fee required by 37 CFR 1.18(e). If patentee does not file a timely request for reconsideration of this patent term adjustment calculation including the information required by 37 CFR 1.705(b)(2) and the fee required by 37 CFR 1.18(e), the USPTO will issue a certificate of correction reflecting the PTA determination noted above.

Patentee should be aware that in order to preserve the right to review in the United States District Court for the District of Columbia of the USPTO patent term adjustment determination, patentee must ensure that he or she also take the steps required under 35 U.S.C. 154(b)(4)(A) in a timely manner. Nothing in the request for recalculation should be construed as providing an alternative time frame for commencing a civil action under 35 U.S.C. 154(b)(4)(A).

Any questions concerning this decision should be directed to the Office of Patent Legal Administration at 571-272-7702.

UNITED STATES PATENT AND TRADEMARK OFFICE

Commissioner for Patents
United States Patent and Trademark Office
P.O. Box 1450
Alexandria, VA 22313-1450
www.uspto.gov

TOWNSEND AND TOWNSEND AND CREW, LLP
TWO EMBARCADERO CENTER
EIGHTH FLOOR
SAN FRANCISCO, CA 94111-3834

COPY MAILED

JUL 23 2007

OFFICE OF PETITIONS

In re Application of :
MOADDEB, Shahram et al. :
Application No. 11/142,127 :
Filed: May 31, 2005 :
Attorney Docket No. **025758-000210US** :

DECISION ON PETITION
TO WITHDRAW
FROM RECORD

This is a decision on the Request to Withdraw as attorney or agent of record under 37 C.F.R. § 1.36(b), filed May 29, 2007.

The request is **NOT APPROVED** as moot.

A review of the file record indicates that the power of attorney to Townsend and Townsend and Crew, LLP has been revoked by the assignee of the patent application on June 04, 2007. Accordingly, the request to withdraw under 37 C.F.R. § 1.36(b) is moot.

All future communications from the Office will continue to be directed to the below-listed address until otherwise notified by applicant.

Telephone inquires concerning this decision should be directed to Michelle R. Eason at 571-272-4231.

Terri Williams
Petitions Examiner
Office of Petitions

cc: **STOEL RIVES LLP - SLC**
201 SOUTH MAIN STREET
ONE UTAH CENTER
SALT LAKE CITY UT 84111

UNITED STATES PATENT AND TRADEMARK OFFICE

UNITED STATES DEPARTMENT OF COMMERCE
United States Patent and Trademark Office
Address: COMMISSIONER FOR PATENTS
P.O. Box 1450
Alexandria, Virginia 22313-1450
www.uspto.gov

PATRICK W. RASCHE
ARMSTRONG TEASDALE LLP
ONE METROPOLITAN SQUARE, SUITE 2600
ST. LOUIS, MO 63102-2740

Mail Date: 04/20/2010

Applicant	: Stephen Solan JR.	: DECISION ON REQUEST FOR
Patent Number	: 7573217	: RECALCULATION of PATENT
Issue Date	: 08/11/2009	: TERM ADJUSTMENT IN VIEW
Appliction No	: 11/142,136	: OF WYETH AND NOTICE OF INTENT TO
Filed	: 05/31/2005	: ISSUE CERTIFICATE OF CORRECTION
		:

The Request for Recalculation is **GRANTED** to the extent indicated.

The patent term adjustment has been determined to be **944** days. The USPTO will *sua sponte* issue a certificate of correction reflecting the amount of PTA days determined by the recalculation.

Prior to the issuance of the certificate of correction, the USPTO will afford patentee an opportunity to be heard and request reconsideration. Accordingly, patentee has **one month or thirty (30) days**, whichever is longer, to file a request for reconsideration of this patent term adjustment calculation. See 35 U.S.C. 154(b)(3)(B)(ii) and 37 CFR 1.322(a)(4). No extensions of time will be granted under 37 CFR 1.136.

Patentee should use document code PET.OP if electronically filing a request for reconsideration of this patent term adjustment calculation. The patentee must also include the information required by 37 CFR 1.705(b)(2) and the fee required by 37 CFR 1.18(e). If patentee does not file a timely request for reconsideration of this patent term adjustment calculation including the information required by 37 CFR 1.705(b)(2) and the fee required by 37 CFR 1.18(e), the USPTO will issue a certificate of correction reflecting the PTA determination noted above.

Patentee should be aware that in order to preserve the right to review in the United States District Court for the District of Columbia of the USPTO patent term adjustment determination, patentee must ensure that he or she also take the steps required under 35 U.S.C. 154(b)(4)(A) in a timely manner. Nothing in the request for recalculation should be construed as providing an alternative time frame for commencing a civil action under 35 U.S.C. 154(b)(4)(A).

Any questions concerning this decision should be directed to the Office of Patent Legal Administration at 571-272-7702.

UNITED STATES PATENT AND TRADEMARK OFFICE

Commissioner for Patents
United States Patent and Trademark Office
P.O. Box 1450
Alexandria, VA 22313-1450
www.uspto.gov

Norman P. Soloway
HAYES SOLOWAY, P.C.
3450 E. Sunrise Drive, Suite 140
Tucson, AZ 85718

COPY MAILED

AUG 25 2009

OFFICE OF PETITIONS

In re Application of	:	
Everly Dean Putnam	:	
Application No. 11/142,139	:	DECISION ON PETITION
Filed: June 1, 2005	:	TO WITHDRAW
Attorney Docket No. MEDUSA 07.10	:	FROM RECORD
	:	

This is a decision on the Request to Withdraw as attorney or agent of record under 37 C.F.R. § 1.36(b), filed April 10, 2009.

The request is **APPROVED**.

A grantable request to withdraw as attorney/agent of record must be signed by every attorney/agent seeking to withdraw or contain a clear indication that one attorney is signing on behalf of another/others. A request to withdraw will not be approved unless at least 30 (thirty) days would remain between the date of approval and the later of the expiration date of a time to file a response or the expiration date of the maximum time period which can be extended under 37 C.F.R. § 1.136(a).

The request was signed by Norman P. Soloway on behalf of all attorneys of record. All attorneys/agents have been withdrawn. Applicant is reminded that there is no attorney of record at this time.

The correspondence address of record has been changed and the new correspondence address is the address indicated below.

The application became abandoned for failure to timely respond to the Office action mailed March 23, 2009.

Telephone inquiries concerning this decision should be directed to Terri Williams at 571-272-2991.

Terri Williams
Petitions Examiner
Office of Petitions

cc: **MEDUSA SPECIAL PROJECTS, LLC**
9121 E. Tanque Verde Road
Suite 105-419
Tucson, AZ 85749

UNITED STATES PATENT AND TRADEMARK OFFICE

UNITED STATES DEPARTMENT OF COMMERCE
United States Patent and Trademark Office
Address: COMMISSIONER FOR PATENTS
P.O. Box 1450
Alexandria, Virginia 22313-1450
www.uspto.gov

APPLICATION NUMBER	FILING OR 371(C) DATE	FIRST NAMED APPLICANT	ATTY. DOCKET NO./TITLE
11/142,139	06/01/2005	Everly Dean Putnam	MEDUSA 07.10

CONFIRMATION NO. 8775

POWER OF ATTORNEY NOTICE

Norman P. Soloway
HAYES SOLOWAY P.C.
3450 E. Sunrise Drive, Suite 140
Tucson, AZ 85718

OC000000037498608

Date Mailed: 08/25/2009

NOTICE REGARDING CHANGE OF POWER OF ATTORNEY

This is in response to the Power of Attorney filed 04/10/2009.

- The withdrawal as attorney in this application has been accepted. Future correspondence will be mailed to the new address of record. 37 CFR 1.33.

/tswilliams/

Office of Data Management, Application Assistance Unit (571) 272-4000, or (571) 272-4200, or 1-888-786-0101

UNITED STATES PATENT AND TRADEMARK OFFICE

UNITED STATES DEPARTMENT OF COMMERCE
United States Patent and Trademark Office
Address: COMMISSIONER FOR PATENTS
P.O. Box 1450
Alexandria, Virginia 22313-1450
www.uspto.gov

APPL NO.	FILING OR 371 (c) DATE	ART UNIT	FIL FEE REC'D	ATTY.DOCKET NO	DRAWINGS	TOT CLMS	IND CLMS
11/142,140	05/31/2005	2621	1050	ADBE-B049-001	2	21	3

CONFIRMATION NO. 7611

CORRECTED FILING RECEIPT

OC000000016457988

53393
ADOBE SYSTEMS, INCORPORATED
c/o PARK, VAUGHAN & FLEMING LLP
2820 FIFTH STREET
DAVIS, CA 95616-2914

Date Mailed: 07/06/2005

Receipt is acknowledged of this regular Patent Application. It will be considered in its order and you will be notified as to the results of the examination. Be sure to provide the U.S. APPLICATION NUMBER, FILING DATE, NAME OF APPLICANT, and TITLE OF INVENTION when inquiring about this application. Fees transmitted by check or draft are subject to collection. Please verify the accuracy of the data presented on this receipt. **If an error is noted on this Filing Receipt, please mail to the Commissioner for Patents P.O. Box 1450 Alexandria Va 22313-1450. Please provide a copy of this Filing Receipt with the changes noted thereon. If you received a "Notice to File Missing Parts" for this application, please submit any corrections to this Filing Receipt with your reply to the Notice. When the USPTO processes the reply to the Notice, the USPTO will generate another Filing Receipt incorporating the requested corrections (if appropriate).**

Applicant(s)

Mark Hamburg, Scotts Valley, CA;

Power of Attorney:

Donna Kolnes--38915
Arvin Park--41241
Hoyt Fleming III--41752
Daniel Vaughan--42199
Jeffrey Myers--44252
Edward Grundler--47615

Domestic Priority data as claimed by applicant

Foreign Applications

If Required, Foreign Filing License Granted: 06/16/2005

The country code and number of your priority application, to be used for filing abroad under the Paris Convention, is US11/142,140

Projected Publication Date: Request for Non-Publication Acknowledged

Non-Publication Request: Yes

Early Publication Request: No

Title

Method and apparatus for interpolating colors

Preliminary Class

382

PROTECTING YOUR INVENTION OUTSIDE THE UNITED STATES

Since the rights granted by a U.S. patent extend only throughout the territory of the United States and have no effect in a foreign country, an inventor who wishes patent protection in another country must apply for a patent in a specific country or in regional patent offices. Applicants may wish to consider the filing of an international application under the Patent Cooperation Treaty (PCT). An international (PCT) application generally has the same effect as a regular national patent application in each PCT-member country. The PCT process **simplifies** the filing of patent applications on the same invention in member countries, but **does not result** in a grant of "an international patent" and does not eliminate the need of applicants to file additional documents and fees in countries where patent protection is desired.

Almost every country has its own patent law, and a person desiring a patent in a particular country must make an application for patent in that country in accordance with its particular laws. Since the laws of many countries differ in various respects from the patent law of the United States, applicants are advised to seek guidance from specific foreign countries to ensure that patent rights are not lost prematurely.

Applicants also are advised that in the case of inventions made in the United States, the Director of the USPTO must issue a license before applicants can apply for a patent in a foreign country. The filing of a U.S. patent application serves as a request for a foreign filing license. The application's filing receipt contains further information and guidance as to the status of applicant's license for foreign filing.

Applicants may wish to consult the USPTO booklet, "General Information Concerning Patents" (specifically, the section entitled "Treaties and Foreign Patents") for more information on timeframes and deadlines for filing foreign patent applications. The guide is available either by contacting the USPTO Contact Center at 800-786-9199, or it can be viewed on the USPTO website at http://www.uspto.gov/web/offices/pac/doc/general/index.html.

LICENSE FOR FOREIGN FILING UNDER
Title 35, United States Code, Section 184
Title 37, Code of Federal Regulations, 5.11 & 5.15

GRANTED

The applicant has been granted a license under 35 U.S.C. 184, if the phrase "IF REQUIRED, FOREIGN FILING LICENSE GRANTED" followed by a date appears on this form. Such licenses are issued in all applications where the conditions for issuance of a license have been met, regardless of whether or not a license may be required as set forth in 37 CFR 5.15. The scope and limitations of this license are set forth in 37 CFR 5.15(a) unless an earlier license has been issued under 37 CFR 5.15(b). The license is subject to revocation upon written notification. The date indicated is the effective date of the license, unless an earlier license of similar scope has been granted under 37 CFR 5.13 or 5.14.

This license is to be retained by the licensee and may be used at any time on or after the effective date thereof unless it is revoked. This license is automatically transferred to any related applications(s) filed under 37 CFR 1.53(d). This license is not retroactive.

The grant of a license does not in any way lessen the responsibility of a licensee for the security of the subject matter as imposed by any Government contract or the provisions of existing laws relating to espionage and the national security or the export of technical data. Licensees should apprise themselves of current regulations especially with respect to certain countries, of other agencies, particularly the Office of Defense Trade Controls, Department of State (with respect to Arms, Munitions and Implements of War (22 CFR 121-128)); the Office of Export Administration, Department of Commerce (15 CFR 370.10 (j)); the Office of Foreign Assets Control, Department of Treasury (31 CFR Parts 500+) and the Department of Energy.

NOT GRANTED

No license under 35 U.S.C. 184 has been granted at this time, if the phrase "IF REQUIRED, FOREIGN FILING LICENSE GRANTED" DOES NOT appear on this form. Applicant may still petition for a license under 37 CFR 5.12, if a license is desired before the expiration of 6 months from the filing date of the application. If 6 months has lapsed from the filing date of this application and the licensee has not received any indication of a secrecy order under 35 U.S.C. 181, the licensee may foreign file the application pursuant to 37 CFR 5.15(b).

UNITED STATES PATENT AND TRADEMARK OFFICE

UNITED STATES DEPARTMENT OF COMMERCE
United States Patent and Trademark Office
Address: COMMISSIONER FOR PATENTS
P.O. Box 1450
Alexandria, Virginia 22313-1450
www.uspto.gov

APPL NO.	FILING OR 371 (c) DATE	ART UNIT	FIL FEE REC'D	ATTY.DOCKET NO	DRAWINGS	TOT CLMS	IND CLMS
11/111,020	04/20/2005	2816	1130	TI-38418	12	6	2

CONFIRMATION NO. 2802

023494
TEXAS INSTRUMENTS INCORPORATED
P O BOX 655474, M/S 3999
DALLAS, TX 75265

UPDATED FILING RECEIPT

OC000000016445785

Date Mailed: 07/05/2005

Receipt is acknowledged of this regular Patent Application. It will be considered in its order and you will be notified as to the results of the examination. Be sure to provide the U.S. APPLICATION NUMBER, FILING DATE, NAME OF APPLICANT, and TITLE OF INVENTION when inquiring about this application. Fees transmitted by check or draft are subject to collection. Please verify the accuracy of the data presented on this receipt. **If an error is noted on this Filing Receipt, please mail to the Commissioner for Patents P.O. Box 1450 Alexandria Va 22313-1450. Please provide a copy of this Filing Receipt with the changes noted thereon. If you received a "Notice to File Missing Parts" for this application, please submit any corrections to this Filing Receipt with your reply to the Notice. When the USPTO processes the reply to the Notice, the USPTO will generate another Filing Receipt incorporating the requested corrections (if appropriate).**

Applicant(s)

Katsuya Ikezawa, Osaka, JAPAN;

Power of Attorney: None

Domestic Priority data as claimed by applicant

Foreign Applications

JAPAN 2004-130283 04/26/2004

If Required, Foreign Filing License Granted: 05/23/2005

The country code and number of your priority application, to be used for filing abroad under the Paris Convention, is US11/111,020

Projected Publication Date: 10/27/2005

Non-Publication Request: No

Early Publication Request: No

Title

Switching power supply device

Preliminary Class

327

PROTECTING YOUR INVENTION OUTSIDE THE UNITED STATES

Since the rights granted by a U.S. patent extend only throughout the territory of the United States and have no effect in a foreign country, an inventor who wishes patent protection in another country must apply for a patent in a specific country or in regional patent offices. Applicants may wish to consider the filing of an international application under the Patent Cooperation Treaty (PCT). An international (PCT) application generally has the same effect as a regular national patent application in each PCT-member country. The PCT process **simplifies** the filing of patent applications on the same invention in member countries, but **does not result** in a grant of "an international patent" and does not eliminate the need of applicants to file additional documents and fees in countries where patent protection is desired.

Almost every country has its own patent law, and a person desiring a patent in a particular country must make an application for patent in that country in accordance with its particular laws. Since the laws of many countries differ in various respects from the patent law of the United States, applicants are advised to seek guidance from specific foreign countries to ensure that patent rights are not lost prematurely.

Applicants also are advised that in the case of inventions made in the United States, the Director of the USPTO must issue a license before applicants can apply for a patent in a foreign country. The filing of a U.S. patent application serves as a request for a foreign filing license. The application's filing receipt contains further information and guidance as to the status of applicant's license for foreign filing.

Applicants may wish to consult the USPTO booklet, "General Information Concerning Patents" (specifically, the section entitled "Treaties and Foreign Patents") for more information on timeframes and deadlines for filing foreign patent applications. The guide is available either by contacting the USPTO Contact Center at 800-786-9199, or it can be viewed on the USPTO website at http://www.uspto.gov/web/offices/pac/doc/general/index.html.

LICENSE FOR FOREIGN FILING UNDER
Title 35, United States Code, Section 184
Title 37, Code of Federal Regulations, 5.11 & 5.15

GRANTED

The applicant has been granted a license under 35 U.S.C. 184, if the phrase "IF REQUIRED, FOREIGN FILING LICENSE GRANTED" followed by a date appears on this form. Such licenses are issued in all applications where the conditions for issuance of a license have been met, regardless of whether or not a license may be required as set forth in 37 CFR 5.15. The scope and limitations of this license are set forth in 37 CFR 5.15(a) unless an earlier license has been issued under 37 CFR 5.15(b). The license is subject to revocation upon written notification. The date indicated is the effective date of the license, unless an earlier license of similar scope has been granted under 37 CFR 5.13 or 5.14.

This license is to be retained by the licensee and may be used at any time on or after the effective date thereof unless it is revoked. This license is automatically transferred to any related applications(s) filed under 37 CFR 1.53(d). This license is not retroactive.

The grant of a license does not in any way lessen the responsibility of a licensee for the security of the subject matter as imposed by any Government contract or the provisions of existing laws relating to espionage and the national security or the export of technical data. Licensees should apprise themselves of current regulations especially with respect to certain countries, of other agencies, particularly the Office of Defense Trade Controls, Department of State (with respect to Arms, Munitions and Implements of War (22 CFR 121-128)); the Office of

Export Administration, Department of Commerce (15 CFR 370.10 (j)); the Office of Foreign Assets Control, Department of Treasury (31 CFR Parts 500+) and the Department of Energy.

NOT GRANTED

No license under 35 U.S.C. 184 has been granted at this time, if the phrase "IF REQUIRED, FOREIGN FILING LICENSE GRANTED" DOES NOT appear on this form. Applicant may still petition for a license under 37 CFR 5.12, if a license is desired before the expiration of 6 months from the filing date of the application. If 6 months has lapsed from the filing date of this application and the licensee has not received any indication of a secrecy order under 35 U.S.C. 181, the licensee may foreign file the application pursuant to 37 CFR 5.15(b).

UNITED STATES PATENT AND TRADEMARK OFFICE

Commissioner for Patents
United States Patent and Trademark Office
P.O. Box 1450
Alexandria, VA 22313-1450
www.uspto.gov

COPY MAILED
SEP 18 2006
OFFICE OF PETITIONS

O'KEEFE, EGAN & PETERMAN
1101 CAPITAL OF TEXAS HIGHWAY SOUTH
#C200
AUSTIN TX 78746

In re Application of	:	
TONGEN	:	
Application No. 11/142,141	:	DECISION ON PETITION
Filed: June 1, 2005	:	TO WITHDRAW
Attorney Docket No. DELL:029	:	FROM RECORD
	:	

This is a decision on the Request to Withdraw as attorney or agent of record under 37 C.F.R. § 1.36(b), filed May 12, 2006.

The request is **APPROVED**.

A grantable request to withdraw as attorney/agent of record must be signed by every attorney/agent seeking to withdraw or contain a clear indication that one attorney is signing on behalf of another/others. A request to withdraw will not be approved unless at least 30 (thirty) days would remain between the date of approval and the later of the expiration date of a time to file a response or the expiration date of the maximum time period which can be extended under 37 C.F.R. § 1.136(a).

The request was signed by Maximilian R. Peterson. Maximilian R. Peterson has been withdrawn as attorney or agent of record; all other attorneys remain of record. The correspondence address of record remains unchanged.

Telephone inquiries concerning this decision should be directed to Monica A. Graves at 571-272-7253.

Denise Pothier
Petitions Examiner
Office of Petitions

UNITED STATES PATENT AND TRADEMARK OFFICE

UNITED STATES DEPARTMENT OF COMMERCE
United States Patent and Trademark Office
Address: COMMISSIONER FOR PATENTS
P.O. Box 1450
Alexandria, Virginia 22313-1450
www.uspto.gov

VIDAS, ARRETT & STEINKRAUS, P.A.
SUITE 400, 6640 SHADY OAK ROAD
EDEN PRAIRIE, MN 55344

Mail Date: 04/21/2010

Applicant	: Mark W. Kroll	: DECISION ON REQUEST FOR
Patent Number	: 7654230	: RECALCULATION of PATENT
Issue Date	: 02/02/2010	: TERM ADJUSTMENT IN VIEW
Appliction No	: 11/142,149	: OF WYETH AND NOTICE OF INTENT TO
Filed	: 05/31/2005	: ISSUE CERTIFICATE OF CORRECTION
		:

The Request for Recalculation is **GRANTED** to the extent indicated.

The patent term adjustment has been determined to be **643** days. The USPTO will *sua sponte* issue a certificate of correction reflecting the amount of PTA days determined by the recalculation.

Prior to the issuance of the certificate of correction, the USPTO will afford patentee an opportunity to be heard and request reconsideration. Accordingly, patentee has **one month or thirty (30) days**, whichever is longer, to file a request for reconsideration of this patent term adjustment calculation. See 35 U.S.C. 154(b)(3)(B)(ii) and 37 CFR 1.322(a)(4). No extensions of time will be granted under 37 CFR 1.136.

Patentee should use document code PET.OP if electronically filing a request for reconsideration of this patent term adjustment calculation. The patentee must also include the information required by 37 CFR 1.705(b)(2) and the fee required by 37 CFR 1.18(e). If patentee does not file a timely request for reconsideration of this patent term adjustment calculation including the information required by 37 CFR 1.705(b)(2) and the fee required by 37 CFR 1.18(e), the USPTO will issue a certificate of correction reflecting the PTA determination noted above.

Patentee should be aware that in order to preserve the right to review in the United States District Court for the District of Columbia of the USPTO patent term adjustment determination, patentee must ensure that he or she also take the steps required under 35 U.S.C. 154(b)(4)(A) in a timely manner. Nothing in the request for recalculation should be construed as providing an alternative time frame for commencing a civil action under 35 U.S.C. 154(b)(4)(A).

Any questions concerning this decision should be directed to the Office of Patent Legal Administration at 571-272-7702.

UNITED STATES PATENT AND TRADEMARK OFFICE

Commissioner for Patents
United States Patent and Trademark Office
P.O. Box 1450
Alexandria, VA 22313-1450
www.uspto.gov

BOSTON SCIENTIFIC NEUROMODULATION CORP.
c/o DARBY & DARBY P.C.
P.O. BOX 770
CHURCH STREET STATION
NEW YORK, NY 10008-0770

COPY MAILED

JUN 0 6 2008

In re Application of	:	
HE, Tom Xiaohai	:	
Application No. 11/142,154	:	DECISION ON PETITION
Filed: June 1, 2005	:	TO WITHDRAW
Attorney Docket No. **20334/0202624-US0**	:	FROM RECORD
	:	

This is a decision on the Request to Withdraw as attorney or agent under 37 C.F.R. § 1.36(b) or 37 C.F.R. § 10.40 filed February 15, 2008.

The request is **NOT APPROVED**.

A review of the file record indicates that **FISH & RICHARDSON, PC** does not have power of attorney in this patent application nor is there any statement or evidence of record of employment in or otherwise being engaged in the proceedings in this patent application. Accordingly, the request to withdraw under 37 C.F.R. § 1.36(b) is not applicable.

All future communications from the Office will continue to be directed to the below-listed address until otherwise properly notified by the applicant.

Telephone inquires concerning this decision should be directed to the undersigned at 571-272-7253.

Monica A. Graves
Petitions Examiner
Office of Petitions

cc: **FISH & RICHARDSON, P.C.**
P.O. BOX 1022
MINNEAPOLIS, MN 55440-1022

UNITED STATES PATENT AND TRADEMARK OFFICE

Commissioner for Patents
United States Patent and Trademark Office
P.O. Box 1450
Alexandria, VA 22313-1450
www.uspto.gov

NORMAN P. SOLOWAY
HAYES SOLOWAY PC
3450 E SUNRISE DRIVE
SUITE 140
TUCSON AZ 85718

COPY MAILED

JUN 1 2 2009

OFFICE OF PETITIONS

In re Application of	:	
Everly Dean PUTNAM	:	
Application No. 11/142,158	:	DECISION ON PETITION
Filed: June 1, 2005	:	TO WITHDRAW
Attorney Docket No. MEDUSA 07.05	:	FROM RECORD
	:	

This is a decision on the Request to Withdraw as attorney or agent of record under 37 C.F.R. § 1.36(b), April 10, 2009.

The request is **APPROVED**.

A grantable request to withdraw as attorney/agent of record must be signed by every attorney/agent seeking to withdraw or contain a clear indication that one attorney is signing on behalf of another/others. The Office requires the practitioner(s) requesting withdrawal to certify that he, she, or they have: (1) given reasonable notice to the client, prior to the expiration of the response period, that the practitioner(s) intends to withdraw from employment; (2) delivered to the client or a duly authorized representative of the client all papers and property (including funds) to which the client is entitled; and (3) notified the client of any responses that may be due and the time frame within which the client must respond, pursuant 37 CFR 10.40(c).

The request was signed by Norman P. Soloway on behalf of all the attorneys of record.

All the attorneys of record have been withdrawn.

Applicant is reminded that there is no attorney of record at this time.

The correspondence address of record has been changed and the new correspondence address is the address indicated below until otherwise properly notified by the applicant.

Telephone inquiries concerning this decision should be directed to the undersigned at 571-272-6735.

Diane Goodwyn
Petitions Examiner
Office of Petitions

cc: MEDUSA SPECIAL PROJECTS, LLC
9121 E. TANQUE VERDE ROAD,
SUITE 105-419
TUCSON, AZ 85749

UNITED STATES PATENT AND TRADEMARK OFFICE

UNITED STATES DEPARTMENT OF COMMERCE
United States Patent and Trademark Office
Address: COMMISSIONER FOR PATENTS
P.O. Box 1450
Alexandria, Virginia 22313-1450
www.uspto.gov

APPLICATION NUMBER	FILING OR 371(C) DATE	FIRST NAMED APPLICANT	ATTY. DOCKET NO./TITLE
11/142,158	06/01/2005	Everly Dean Putnam	MEDUSA 07.05

CONFIRMATION NO. 5964

POWER OF ATTORNEY NOTICE

Norman P. Soloway
HAYES SOLOWAY P.C.
Suite 140
3450 E. Sunrise Drive
Tucson, AZ 85718

OC000000036445085

Date Mailed: 06/12/2009

NOTICE REGARDING CHANGE OF POWER OF ATTORNEY

This is in response to the Power of Attorney filed 04/10/2009.

- The withdrawal as attorney in this application has been accepted. Future correspondence will be mailed to the new address of record. 37 CFR 1.33.

/dcgoodwyn/

Office of Data Management, Application Assistance Unit (571) 272-4000, or (571) 272-4200, or 1-888-786-0101

UNITED STATES PATENT AND TRADEMARK OFFICE

UNITED STATES DEPARTMENT OF COMMERCE
United States Patent and Trademark Office
Address: COMMISSIONER FOR PATENTS
P.O. Box 1450
Alexandria, Virginia 22313-1450
www.uspto.gov

Beyer Law Group LLP
P.O. BOX 1687
Cupertino, CA 95015-1687

Mail Date: 04/20/2010

Applicant	: Ravi Mangalam Rangan	: DECISION ON REQUEST FOR
Patent Number	: 7617014	: RECALCULATION of PATENT
Issue Date	: 11/10/2009	: TERM ADJUSTMENT IN VIEW
Appliction No	: 11/142,164	: OF WYETH AND NOTICE OF INTENT TO
Filed	: 05/31/2005	: ISSUE CERTIFICATE OF CORRECTION
		:

The Request for Recalculation is **GRANTED** to the extent indicated.

The patent term adjustment has been determined to be **462** days. The USPTO will *sua sponte* issue a certificate of correction reflecting the amount of PTA days determined by the recalculation.

Prior to the issuance of the certificate of correction, the USPTO will afford patentee an opportunity to be heard and request reconsideration. Accordingly, patentee has **one month or thirty (30) days**, whichever is longer, to file a request for reconsideration of this patent term adjustment calculation. See 35 U.S.C. 154(b)(3)(B)(ii) and 37 CFR 1.322(a)(4). No extensions of time will be granted under 37 CFR 1.136.

Patentee should use document code PET.OP if electronically filing a request for reconsideration of this patent term adjustment calculation. The patentee must also include the information required by 37 CFR 1.705(b)(2) and the fee required by 37 CFR 1.18(e). If patentee does not file a timely request for reconsideration of this patent term adjustment calculation including the information required by 37 CFR 1.705(b)(2) and the fee required by 37 CFR 1.18(e), the USPTO will issue a certificate of correction reflecting the PTA determination noted above.

Patentee should be aware that in order to preserve the right to review in the United States District Court for the District of Columbia of the USPTO patent term adjustment determination, patentee must ensure that he or she also take the steps required under 35 U.S.C. 154(b)(4)(A) in a timely manner. Nothing in the request for recalculation should be construed as providing an alternative time frame for commencing a civil action under 35 U.S.C. 154(b)(4)(A).

Any questions concerning this decision should be directed to the Office of Patent Legal Administration at 571-272-7702.

UNITED STATES PATENT AND TRADEMARK OFFICE

Commissioner for Patents
United States Patent and Trademark Office
P.O. Box 1450
Alexandria, VA 22313-1450
www.uspto.gov

NORMAN P. SOLOWAY
HAYES SOLOWAY PC
3450 E SUNRISE DRIVE
SUITE 140
TUCSON AZ 85718

COPY MAILED

JUN 12 2009

OFFICE OF PETITIONS

In re Application of	:	
Everly Dean PUTNAM	:	
Application No. 11/142,168	:	DECISION ON PETITION
Filed: June 1, 2005	:	TO WITHDRAW
Attorney Docket No. MEDUSA 070.01	:	FROM RECORD
	:	

This is a decision on the Request to Withdraw as attorney or agent of record under 37 C.F.R. § 1.36(b), April 10, 2009.

The request is **APPROVED**.

A grantable request to withdraw as attorney/agent of record must be signed by every attorney/agent seeking to withdraw or contain a clear indication that one attorney is signing on behalf of another/others. The Office requires the practitioner(s) requesting withdrawal to certify that he, she, or they have: (1) given reasonable notice to the client, prior to the expiration of the response period, that the practitioner(s) intends to withdraw from employment; (2) delivered to the client or a duly authorized representative of the client all papers and property (including funds) to which the client is entitled; and (3) notified the client of any responses that may be due and the time frame within which the client must respond, pursuant 37 CFR 10.40(c).

The request was signed by Norman P. Soloway on behalf of all the attorneys of record.

All the attorneys of record have been withdrawn.

Applicant is reminded that there is no attorney of record at this time.

The correspondence address of record has been changed and the new correspondence address is the address indicated below until otherwise properly notified by the applicant.

Telephone inquiries concerning this decision should be directed to the undersigned at 571-272-6735.

Diane Goodwyn
Petitions Examiner
Office of Petitions

cc: MEDUSA SPECIAL PROJECTS, LLC
9121 E. TANQUE VERDE ROAD,
SUITE 105-419
TUCSON, AZ 85749

UNITED STATES PATENT AND TRADEMARK OFFICE

UNITED STATES DEPARTMENT OF COMMERCE
United States Patent and Trademark Office
Address: COMMISSIONER FOR PATENTS
P.O. Box 1450
Alexandria, Virginia 22313-1450
www.uspto.gov

APPLICATION NUMBER	FILING OR 371(C) DATE	FIRST NAMED APPLICANT	ATTY. DOCKET NO./TITLE
11/142,168	06/01/2005	Everly Dean Putnam	MEDUSA 070.01

CONFIRMATION NO. 5956

POWER OF ATTORNEY NOTICE

OC000000036418450

Nornam P. Soloway
HAYES SOLOWAY PC
3450 E Sunrise Drive
Suite 140
Tucson, AZ 85718

Date Mailed: 06/11/2009

NOTICE REGARDING CHANGE OF POWER OF ATTORNEY

This is in response to the Power of Attorney filed 04/10/2009.

- The withdrawal as attorney in this application has been accepted. Future correspondence will be mailed to the new address of record. 37 CFR 1.33.

/dcgoodwyn/

Office of Data Management, Application Assistance Unit (571) 272-4000, or (571) 272-4200, or 1-888-786-0101

UNITED STATES PATENT AND TRADEMARK OFFICE

UNITED STATES DEPARTMENT OF COMMERCE
United States Patent and Trademark Office
Address: COMMISSIONER FOR PATENTS
P.O. Box 1450
Alexandria, Virginia 22313-1450
www.uspto.gov

MARK A LAUER
6601 KOLL CENTER PARKWAY
SUITE 245
PLEASANTON, CA 94566

Mail Date: 04/21/2010

Applicant	: Mark A. Lauer	: DECISION ON REQUEST FOR
Patent Number	: 7580228	: RECALCULATION of PATENT
Issue Date	: 08/25/2009	: TERM ADJUSTMENT IN VIEW
Appliction No	: 11/142,170	: OF WYETH AND NOTICE OF INTENT TO
Filed	: 05/31/2005	: ISSUE CERTIFICATE OF CORRECTION
		:

The Request for Recalculation is **GRANTED** to the extent indicated.

The patent term adjustment has been determined to be **1070** days. The USPTO will *sua sponte* issue a certificate of correction reflecting the amount of PTA days determined by the recalculation.

Prior to the issuance of the certificate of correction, the USPTO will afford patentee an opportunity to be heard and request reconsideration. Accordingly, patentee has **one month or thirty (30) days**, whichever is longer, to file a request for reconsideration of this patent term adjustment calculation. See 35 U.S.C. 154(b)(3)(B)(ii) and 37 CFR 1.322(a)(4). No extensions of time will be granted under 37 CFR 1.136.

Patentee should use document code PET.OP if electronically filing a request for reconsideration of this patent term adjustment calculation. The patentee must also include the information required by 37 CFR 1.705(b)(2) and the fee required by 37 CFR 1.18(e). If patentee does not file a timely request for reconsideration of this patent term adjustment calculation including the information required by 37 CFR 1.705(b)(2) and the fee required by 37 CFR 1.18(e), the USPTO will issue a certificate of correction reflecting the PTA determination noted above.

Patentee should be aware that in order to preserve the right to review in the United States District Court for the District of Columbia of the USPTO patent term adjustment determination, patentee must ensure that he or she also take the steps required under 35 U.S.C. 154(b)(4)(A) in a timely manner. Nothing in the request for recalculation should be construed as providing an alternative time frame for commencing a civil action under 35 U.S.C. 154(b)(4)(A).

Any questions concerning this decision should be directed to the Office of Patent Legal Administration at 571-272-7702.

UNITED STATES PATENT AND TRADEMARK OFFICE

Commissioner for Patents
United States Patent and Trademark Office
P.O. Box 1450
Alexandria, VA 22313-1450
www.uspto.gov

Date Mailed: September 11, 2007

Starkweather and Associates
Suite 200
9035 South 1300 East
Sandy UT 84094

Applicant: Barlow
Appl. No.: 11/142,178
Filing Date: May 31, 2005
Title: MOBILE BILLBOARD ADVERTISING SYSTEM AND APPARATUSES
Attorney Docket No.: 3246.2.1 NP
Pub. No.: US 2006/0271428 A1
Pub. Date: November 30, 2006

This is a decision on the request for republication of patent application publication under 37 CFR 1.221(a), filed on June 18, 2007, for the above-identified application.

The request under 37 CFR 1.221(a) is DISMISSED.

37 CFR 1.221(a) requires "a copy of the application in compliance with the Office electronic filing system requirements and be accompanied by the publication fee set forth in § 1.18(d) and the processing fee set forth in § 1.17(i)". If the request for republication does not comply with the electronic filing system requirements, the republication will not take place and the publication fee set forth in § 1.18(d) will be refunded. The processing fee will be retained.

The applicant did not supply a copy of the application in compliance with the Office electronic filing system, as required by 37 CFR 1.221(a) because the Applicant submitted the papers as follow-on "Document", which are entered into the application file and not as a "Pre-Grant Publication" submission. The request for republication does not comply with the electronic filing system requirements, thus republication will not take place.

Any request for republication under 37 CFR 1.221(a), must be submitted via the EFS system, as a Pre-Grant publication submission.

Any questions or requests for reconsideration of the decision, should be addressed as follows:

By mail to: Mail Stop PGPUB
Commissioner for Patents
P.O. Box 1450
Alexandria, Va. 22313-1450

By facsimile: 571-273-8300

Telephone inquiries regarding this correspondence should be directed to The Office of Patent Publication, Pre-Grant Publication Division, 703-605-4283.

Tammy J. Koontz
Program & Management Analyst
Pre-Grant Publication Division
Office of Patent Publication

Adjustment date: 09/11/2007 KKING1
06/19/2007 NNGUYEN1 00000037 11142178
01 FC:1504 -300.00 OP

Refund Ref:
09/11/2007 0030044600

Credit Card Refund Total: $300.00

Am Exp..: XXXXXXXXXXX2003

UNITED STATES PATENT AND TRADEMARK OFFICE

UNITED STATES DEPARTMENT OF COMMERCE
United States Patent and Trademark Office
Address: COMMISSIONER FOR PATENTS
P.O. Box 1450
Alexandria, Virginia 22313-1450
www.uspto.gov

APPLICATION NO.	FILING DATE	FIRST NAMED INVENTOR	ATTORNEY DOCKET NO.	CONFIRMATION NO.
11/142,178	05/31/2005	Eslee Buckley Barlow	3614.FROG.PT	5923

27472 7590 08/11/2009
BATEMAN IP LAW GROUP
P.O. BOX 1319
SALT LAKE CITY, UT 84110

EXAMINER
MYHRE, JAMES W

ART UNIT	PAPER NUMBER
3688	

MAIL DATE	DELIVERY MODE
08/11/2009	PAPER

Please find below and/or attached an Office communication concerning this application or proceeding.

The time period for reply, if any, is set in the attached communication.

UNITED STATES PATENT AND TRADEMARK OFFICE

Commissioner for Patents
United States Patent and Trademark Office
P.O. Box 1450
Alexandria, VA 22313-1450
www.uspto.gov

BATEMAN IP LAW GROUP
P.O. BOX 1319
SALT LAKE CITY UT 84110

Applicant: Barlow
Appl. No.: 11/142,178
Filing Date: May 31, 2005
Title: MOBILE BILLBOARD ADVERTISING SYSTEM AND APPARATUSES
Attorney Docket No.: 3614.FROG.PT
Pub. No.: US 2006/0271428 A1
Pub. Date: November 30, 2006

This is a decision on the second request for republication of patent application publication under 37 CFR 1.221(a), filed on January 15, 2008, for the above-identified application.

The request under 37 CFR 1.221(a) is DISMISSED.

37 CFR 1.221(a) requires "a copy of the application in compliance with the Office electronic filing system requirements and be accompanied by the publication fee set forth in § 1.18(d) and the processing fee set forth in § 1.17(i)". If the request for republication does not comply with the electronic filing system requirements, the republication will not take place and the publication fee set forth in § 1.18(d) will be refunded. The processing fee will be retained. Office records indicate that the publication fee was refunded on June 12, 2008. Therefore, no refund is due at this time.

The applicant did not supply a copy of the application in compliance with the Office electronic filing system, as required by 37 CFR 1.221(a) because **the Applicant submitted the papers as a "Document for an existing application", which are entered into the application file, and not as a "Pre-Grant Publication" submission**. The request for republication does not comply with the electronic filing system requirements, thus republication will not take place.

Any request for republication under 37 CFR 1.221(a), must be submitted via the EFS system, as a Pre-Grant publication submission and must include a copy of the application in compliance with the Office electronic filing system requirements. The applicant is directed to the following

website for additional instructions on how to submit a Pre-Grant Publication submission via the electronic filing system:

http://www.uspto.gov/ebc/portal/efs/pgpub_quickstart.pdf

Any questions or requests for reconsideration of the decision should be addressed as follows:

By mail to: Mail Stop PGPUB
Commissioner for Patents
P.O. Box 1450
Alexandria, Va. 22313-1450

By facsimile: 571-273-8300

Telephone inquiries regarding this correspondence should be directed to The Office of Data Management at 571-272-4200.

Office of Data Management
United States Patent & Trademark Office

UNITED STATES PATENT AND TRADEMARK OFFICE

COMMISSIONER FOR PATENTS
UNITED STATES PATENT AND TRADEMARK OFFICE
P.O. BOX 1450
ALEXANDRIA, VA 22313-1450
www.uspto.gov

COPY MAILED

SEP 21 2007

OFFICE OF PETITIONS

AKIN GUMP STRAUSS HAUER & FELD L.L.P.
ONE COMMERCE SQUARE
2005 MARKET STREET, SUITE 2200
PHILADELPHIA PA 19103

In re Patent No. 7,069,899 Issue Date: July 4, 2006 Application No. 11/142,185 Filed: June 1, 2005 Attorney Docket No. 600791-16US (ZUS05-004TAE	: : : : : :	DECISION ON PETITION

This is a decision on the petition under 37 CFR 1.182, filed September 26, 2006, requesting issuance of a duplicate Letters Patent for the above-identified patent.

Patentee is entitled to one ribbon copy of the patent. Duplicate letters patent are not issued for the purpose requested in the instant petition; i.e., multiple assignees desiring an original letters patent.

A certified copy of the patent may be obtained by contacting **OPR** at: Mail Stop Document Services, Director of the United States Patent and Trademark Office, PO Box 1450, Alexandria, VA 22213-1450 or 571-272-3250.

In view thereof, the petition is hereby **DISMISSED**.

As authorized, the $400 fee for the petition under 37 CFR 1.182 has been assessed to petitioner's deposit account.

Inquiries concerning this decision may be directed to the undersigned at 571-272-3205.

Alesia M. Brown
Petitions Attorney
Office of Petitions

UNITED STATES PATENT AND TRADEMARK OFFICE

Commissioner for Patents
United States Patent and Trademark Office
P.O. Box 1450
Alexandria, VA 22313-1450
www.uspto.gov

DRINKER BIDDLE & REATH (DC)
1500 K STREET, NW
SUITE 1100
WASHINGTON, DC 20005-1209

COPY MAILED

SEP 2 0 2006

OFFICE OF PETITIONS

ON PETITION

In re Application of :
Clas Sjogren et al. :
Application No. 11/142,191 :
Filed: June 2, 2005 :
Attorney Docket No. 024445-584 :

This is a decision on the petition filed February 27, 2006, to withdraw the holding of abandonment under 37 CFR 1.181, in accordance with the reasoning of the decision in Delgar Inc. v. Schuyler, 172 USPQ 513. The petition also pleads in the alternative to waive extension of time fees.

The petition under 37 CFR 1.181(b) is **DISMISSED as involving moot issues.** The extension of time fees cannot be waived.

The file record discloses that a Notice to File Missing Parts was mailed August 2, 2005 to what was believed to be the address of record. However, petitioner contends that it was not received. In support of this contention, petitioner provides a statement from the previous attorneys of records claiming that as of July 19, 2005 they transferred the instant application and all related files to DRINKER BIDDLE & REATH (DC) and that they no longer kept a docket for this application.

Unfortunately, the requirement under 37 CFR 1.181, that copies of the actual docket records or file jacket be provided, has not been met. Neither was a proper change of correspondence address filed with the USPTO upon the transfer on July 19, 2005. No basis for withdrawing the holding of abandonment has been provided.

Alternatively, petitioners have filed a response to the Notice to File Missing Parts within the extendable period of time and a five month extension of time. Thus the oath or declaration has been accepted as a proper and timely reply to the Notice to File Missing Parts. In view of the extension of time, the application is not abandoned.

This matter is being referred to Technology Center to be examined in due course.

Telephone inquiries concerning this matter may be directed to the undersigned Petitions Attorney at (571) 272-3212.

Patricia Faison-Ball

Patricia Faison-Ball
Senior Petitions Attorney
Office of Petitions

UNITED STATES PATENT AND TRADEMARK OFFICE

Commissioner for Patents
United States Patent and Trademark Office
P.O. Box 1450
Alexandria, VA 22313-1450
www.uspto.gov

DILLON & YUDELL
8911 NORTH CAPITAL OF TEXAS HWY
SUITE 2110
AUSTIN, TX 78759

COPY MAILED
APR 25 2006
OFFICE OF PETITIONS

In re Application of	:	
Daniel G. Brawley et al	:	DECISION ON PETITION
Application No. 11/142,212	:	TO MAKE SPECIAL UNDER
Filed: June 1, 2005	:	37 CFR 1.102(c)(2)
Attorney Docket No. OWLGROUP.000002	:	

This is a decision on the petition under 37 CFR 1.102(c)(2)(i), filed March 16, 2006, to make the above-identified application special based on the invention materially enhancing the quality of the environment, as set forth in M.P.E.P. § 708.02, Section V.

The petition is DISMISSED.

A grantable petition to make an application special under 37 CFR 1.102(c)(2)(i) and MPEP § 708.02, Section V: Environmental Quality, must state that special status is sought because the invention materially enhances the quality of the environment by contributing to the restoration or maintenance of basic life-sustaining natural elements. If the disclosure is not clear on its face that the claimed invention materially enhances the quality of the environment by contributing to the restoration or maintenance of one of the basic life-sustaining natural elements, the petition must be accompanied by a statement by the applicant, assignee, or an attorney/agent registered to practice before the Office explaining how the materiality standard is met. No fee is required.

Applicants' invention is a method for issuing a life insurance policy. While this invention may be beneficial to the environment, a review of the disclosure and petition do not clearly articulate how the claimed invention materially enhances the quality of the environment. Therefore, it is unclear how applicants' invention would significantly contribute to the development or conservation of energy resources. The petition also accompanied a detailed discussion of how the claimed subject matter is patentable over the references in accordance with 37 CFR 1.111 (b) and (c). Petitioner may wish to filed a petition under 37 CFR 1.102(d) accompanied by the fee set forth in 37 CFR 1.17(h).

Further correspondence with respect to this matter should be addressed as follows:

By Mail: Mail Stop PETITION
Commissioner for Patents
P. O. Box 1450
Alexandria, VA 22313-1450

By hand: U. S. Patent and Trademark Office
Customer Service Window, Mail Stop Petitions
Randolph Building
401 Dulany Street
Alexandria, VA 22314

By FAX: (571) 273-8300

Telephone inquiries concerning this decision should be directed to Wan Laymon 571-272-3220.

All other inquiries concerning either the examination or status of the application should be directed to the Technology Center.

This application is being referred to Technology Center Art Unit 3672 for action in its regular turn.

Amelia Au
Petitions Examiner
Office of Petitions

UNITED STATES PATENT AND TRADEMARK OFFICE

Commissioner for Patents
United States Patent and Trademark Office
P.O. Box 1450
Alexandria, VA 22313-1450
www.uspto.gov

JUL 0 9 2009

Dillon & Yudell LLP
8911 North Capital of Texas Hwy
Suite 2110
Austin, TX 78759

In re application of Daniel G. Brawley et al. Application No. 11/142,212 Filed: June 1, 2005 For: METHOD, SYSTEM AND PROGRAM PRODUCT SUPPORTING INSURANCE-FUNDED END-OF-LIFTIME ACTIVITIES FOR A FACILITY	**DECISION ON PETITION TO MAKE SPECIAL FOR NEW APPLICATION UNDER 37 CFR 1.102**

This is in response to the petition filed on May 22, 2006 to make the above-identified application special on the basis of special examining procedure for certain new applications - accelerated examination as set forth in MPEP § 708.02 VIII.

The requirements for granting special status under this section are: (A) a petition to make special accompanied by the fee set forth in 37 CFR 1.17(i); (B) all claims being directed to a single invention, or an election without traverse if the Office determines that all the claims are not directed to a single invention; (C) a statement that a pre-examination search was made listing the field of search; (D) one copy of each of the references deemed most closely related to the subject matter encompassed by the claims if said references are not already of record; and (E) a detailed discussion of how the claimed subject matter is patentable over the references.

The petition filed May 22, 2206 fails to adequately meet requirements (B) above. Petitioner fails to indicate that all the claims are directed to a single invention, or that applicants agree that if the Examiner imposes a restriction requirement, the applicants will make an election without traverse.

It is also noted that in section III. Detailed Discussion of the References, petitioner has misidentified '768 Roberts patent. The reference identified does not match the reference number cited on the IDS filed June 1, 2005. Additionally, under section B. Discussion of claim invention, petitioner has made two references to independent claim 18 (see paragraph B.2. and B.3.)

For the above stated reasons, the petition is **DISMISSED**.

Petitioner is given one more opportunity to perfect the petition. Any request for reconsideration must be filed within TWO MONTHS of the date of this decision. Extensions of time under 37 CFR 1.136(a) are permitted.

Applicant should promptly submit a renewed petition to the Commissioner of Patents and Trademarks, P.O. Box 1450, Alexandria, VA 22313-1450. The envelope should indicate that the correspondence be brought to the attention of Technology Center 3600.

Until the renewed petition is submitted, the application will be returned to the examiner's docket to await treatment on the merits in the normal order of examination.

SUMMARY: Petition to Make Special **DISMISSED**.

Teri P. Luu,
Quality Assurance Specialist
Technology Center 3600

TL/tl: 07/09/09

UNITED STATES PATENT AND TRADEMARK OFFICE

Commissioner for Patents
United States Patent and Trademark Office
P.O. Box 1450
Alexandria, VA 22313-1450
www.uspto.gov

SUGHRUE, MION, ZINN, MACPEAK & SEAS, PLLC
2100 PENNSYLVANIA AVENUE, NW
WASHINGTON, DC 20037-3213

COPY MAILED

JUN 09 2008

OFFICE OF PETITIONS

In re Application of	:	
UENO, Ryuji	:	
Application No. 11/142,251	:	DECISION GRANTING PETITION
Filed: June 2, 2005	:	UNDER 37 CFR 1.313(c)(2)
Attorney Docket No. **A8932**	:	

This is a decision on the petition under 37 CFR 1.313(c)(2), filed March 4, 2008, to withdraw the above-identified application from issue after payment of the issue fee.

The petition is **GRANTED.**

The above-identified application is withdrawn from issue for consideration of a submission under 37 CFR 1.114 (request for continued examination). *See* 37 CFR 1.313(c)(2).

Petitioner is advised that the issue fee paid on April 25, 2008 cannot be refunded. If, however, this application is again allowed, petitioner may request that it be applied towards the issue fee required by the new Notice of Allowance.[1]

There is no indication that the person signing the petition was ever given a power of attorney or authorization of agent to prosecute the above-identified application. However, the signature of Keiko K. Takagi appearing on the petition shall constitute a representation to the United States Patent and Trademark Office that he or she is authorized to represent the particular party on whose behalf he acts in accordance with 37 CFR 1.34(a).

Telephone inquiries should be directed to Monica A. Graves at (571) 272-7253.

This application is being referred to Technology Center AU 1614 for processing of the request for continued examination under 37 CFR 1.114 and for consideration of the concurrently filed information disclosure statement.

Monica A. Graves
Petitions Examiner
Office of Petitions

---

[1] *The request to apply the issue fee to the new Notice may be satisfied by completing and returning the new Part B – Fee(s) Transmittal Form (along with any balance due at the time of submission). Petitioner is advised that the Issue Fee Transmittal Form* ***must*** *be completed and timely submitted to avoid abandonment of the application.*

UNITED STATES PATENT AND TRADEMARK OFFICE

Commissioner for Patents
United States Patent and Trademark Office
P.O. Box 1450
Alexandria, VA 22313-1450
www.uspto.gov

NIXON PEABODY LLP
401 9TH STREET, NW, SUITE 900
WASHINGTON, DC 20004-2128

COPY MAILED

AUG 0 8 2007

OFFICE OF PETITIONS

In re Application of :
Shunpei Yamazaki et al :
Application No. 11/142,275 : ON PETITION
Filed: June 2, 2005 :
Attorney Docket No. 740756-2856

This is a decision on the petition, filed August 7, 2007, which is being treated as a petition under 37 CFR 1.313(c)(2) to withdraw the above-identified application from issue after payment of the issue fee.

The petition is **GRANTED**.

The above-identified application is withdrawn from issue for consideration of a submission under 37 CFR 1.114 (request for continued examination). See 37 CFR 1.313(c)(2).

Petitioner is advised that the issue fee paid on July 5, 2007 in the above-identified application cannot be refunded. If, however, the above-identified application is again allowed, petitioner may request that it be applied towards the issue fee required by the new Notice of Allowance.[1]

Telephone inquiries should be directed to Irvin Dingle at (571) 272-3210.

This matter is being referred to Technology Center AU 2891 for processing of the request for continued examination under 37 CFR 1.114 and for consideration of the concurrently filed Information Disclosure Statement.

Irvin Dingle
Petitions Examiner
Office of Petitions

---

[1] The request to apply the issue fee to the new Notice may be satisfied by completing and returning the new Issue Fee Transmittal Form PTOL-85(b), which includes the following language thereon: Commissioner for Patents is requested to apply the Issue Fee and Publication Fee (if any) or re-apply any previously paid issue fee to the application identified above. Petitioner is advised that, whether a fee is indicated as being due or not, the Issue Fee Transmittal Form **must** be completed and timely submitted to avoid abandonment. Note the language in bold text on the first page of the Notice of Allowance and Fee(s) Due (PTOL-85).

UNITED STATES PATENT AND TRADEMARK OFFICE

Commissioner for Patents
United States Patent and Trademark Office
P.O. Box 1450
Alexandria, VA 22313-1450
www.uspto.gov

NIXON PEABODY, LLP
401 9TH STREET NW, SUITE 900
WASHINGTON DC 20004-2128

COPY MAILED

APR 0 1 2008

OFFICE OF PETITIONS

In re Application of	:	
YAMAZAKI, et al.	:	
Application No. 11/142,275	:	DECISION GRANTING PETITION
Filed: June 2, 2005	:	UNDER 37 CFR 1.313(c)(2)
Attorney Docket No. **740756-2856**	:	

This is a decision on the petition under 37 CFR 1.313(c)(2), filed March 31, 2008, to withdraw the above-identified application from issue after payment of the issue fee.

The petition is **GRANTED.**

The above-identified application is withdrawn from issue for consideration of a submission under 37 CFR 1.114 (request for continued examination). *See* 37 CFR 1.313(c)(2).

Petitioner is advised that the issue fee paid on July 5, 2007 cannot be refunded. If, however, this application is again allowed, petitioner may request that it be applied towards the issue fee required by the new Notice of Allowance.[1]

Telephone inquiries should be directed to the undersigned at (571) 272-7253.

This application is being referred to Technology Center AU 2891 for processing of the request for continued examination under 37 CFR 1.114 and for consideration of the concurrently filed information disclosure statement.

Monica A. Graves
Petitions Examiner
Office of Petitions

---

[1] *The request to apply the issue fee to the new Notice may be satisfied by completing and returning the new Part B – Fee(s) Transmittal Form (along with any balance due at the time of submission). Petitioner is advised that the Issue Fee Transmittal Form* ***must*** *be completed and timely submitted to avoid abandonment of the application.*

UNITED STATES PATENT AND TRADEMARK OFFICE

UNITED STATES DEPARTMENT OF COMMERCE
United States Patent and Trademark Office
Address: COMMISSIONER FOR PATENTS
P.O. Box 1450
Alexandria, Virginia 22313-1450
www.uspto.gov

NIXON & VANDERHYE, PC
901 NORTH GLEBE ROAD, 11TH FLOOR
ARLINGTON, VA 22203

Mail Date: 04/21/2010

Applicant	: Koichi Miyachi	: DECISION ON REQUEST FOR
Patent Number	: 7576820	: RECALCULATION of PATENT
Issue Date	: 08/18/2009	: TERM ADJUSTMENT IN VIEW
Appliction No	: 11/142,277	: OF WYETH AND NOTICE OF INTENT TO
Filed	: 06/02/2005	: ISSUE CERTIFICATE OF CORRECTION
		:

The Request for Recalculation is **GRANTED** to the extent indicated.

The patent term adjustment has been determined to be **0** days. The USPTO will *sua sponte* issue a certificate of correction reflecting the amount of PTA days determined by the recalculation.

Prior to the issuance of the certificate of correction, the USPTO will afford patentee an opportunity to be heard and request reconsideration. Accordingly, patentee has **one month or thirty (30) days**, whichever is longer, to file a request for reconsideration of this patent term adjustment calculation. See 35 U.S.C. 154(b)(3)(B)(ii) and 37 CFR 1.322(a)(4). No extensions of time will be granted under 37 CFR 1.136.

Patentee should use document code PET.OP if electronically filing a request for reconsideration of this patent term adjustment calculation. The patentee must also include the information required by 37 CFR 1.705(b)(2) and the fee required by 37 CFR 1.18(e). If patentee does not file a timely request for reconsideration of this patent term adjustment calculation including the information required by 37 CFR 1.705(b)(2) and the fee required by 37 CFR 1.18(e), the USPTO will issue a certificate of correction reflecting the PTA determination noted above.

Patentee should be aware that in order to preserve the right to review in the United States District Court for the District of Columbia of the USPTO patent term adjustment determination, patentee must ensure that he or she also take the steps required under 35 U.S.C. 154(b)(4)(A) in a timely manner. Nothing in the request for recalculation should be construed as providing an alternative time frame for commencing a civil action under 35 U.S.C. 154(b)(4)(A).

Any questions concerning this decision should be directed to the Office of Patent Legal Administration at 571-272-7702.

UNITED STATES PATENT AND TRADEMARK OFFICE

UNITED STATES DEPARTMENT OF COMMERCE
United States Patent and Trademark Office
Address: COMMISSIONER FOR PATENTS
P.O. Box 1450
Alexandria, Virginia 22313-1450
www.uspto.gov

NIXON & VANDERHYE, PC
901 NORTH GLEBE ROAD, 11TH FLOOR
ARLINGTON, VA 22203

Mail Date: 05/18/2010

Applicant : Koichi Miyachi
Patent Number : 7576820
Issue Date : 08/18/2009
Application No : 11/142,277
Filed : 06/02/2005

: NOTICE CONCERNING IMPROPER
: CALCULATION OF PATENT TERM
: ADJUSTMENT BASED UPON USPTO
: IMPROPERLY MEASURING REDUCTION
: PERIOD UNDER 37 CFR 1.704(c)(10).

The United States Patent and Trademark Office (USPTO) discovered that in processing the recent recalculation decisions mailed in response to patentee's filed Request for Recalculation of Patent Term Adjustment in view of Wyeth, the USPTO improperly measured the reduction period for reductions under 37 CFR 1.704(c)(10). Pursuant to 37 CFR 1.704(c)(10), patentee's reduction begins on the date of filing the amendment under 37 CFR 1.312 ("1.312 amendment") or other related paper and ends on the date that the Office mails a response to the filing of the 1.312 amendment or other paper. It has been discovered that during the recalculation, the calculation failed to the limit the reduction to the mail date of the response to the 1.312 amendment or other paper. Accordingly, patentee's reductions were greater than warranted.

This notice **VACATES** the previous GRANTED request for recalculation and provides patentee with a revised GRANTED recalculation.

The patent term adjustment has been determined to be **91** days. The USPTO will *sua sponte* issue a certificate of correction reflecting the amount of patent term adjustment (PTA) days determined by the recalculation.

Prior to the issuance of the certificate of correction, the USPTO will afford patentee an opportunity to be heard and request reconsideration. Accordingly, patentee has **one month or thirty (30) days** from the mail date of this notice, whichever is longer, to file a request for reconsideration of this PTA calculation. See 35 U.S.C. § 154(b)(3)(B)(ii) and 37 CFR 1.322(a)(4).

Patentee should use document code PET.OP if electronically filing a request for reconsideration of this PTA calculation. The patentee must also include the information required by 37 CFR 1.705(b)(2), and the fee required by 37 CFR 1.18(e). If patentee does not file a timely request for reconsideration of this PTA calculation, including the information required by 37 CFR 1.705(b)(2) and the fee required by 37 CFR 1.18(e), the USPTO will issue a certificate of correction reflecting the PTA determination noted above.

Patentee should be aware that in order to preserve the right of review of the USPTO's PTA determination in the United States District Court for the District of Columbia, patentee must ensure that the steps required under 35 U.S.C. § 154 (b)(4) are taken in a timely manner. Nothing in the request for recalculation should be construed as providing an alternative time frame for commencing a civil action under 35 U.S.C. § 154(b)(4).

SPE RESPONSE FOR CERTIFICATE OF CORRECTION

Paper No.: _____

DATE : 2/29/08

TO SPE OF : ART UNIT 2822

SUBJECT : Request for Certificate of Correction on Patent No.: 7298021

A response is requested with respect to the accompanying request for a certificate of correction.

Please complete this form and return with file, within 7 days to:
Palm location **7580, Certificates of Correction Branch – South Tower – 9A22**
If response is for an IFW, **return to employee (named below) via PUBSCofC Team in MADRAS.**
With respect to the change(s) requested, correcting Office and/or Applicant's errors, should the patent read as shown in the certificate of correction (COCIN)? No new matter should be introduced, nor should the scope or meaning of the claims be changed.

Valerie Jackson

Thank You For Your Assistance

Certificates of Correction Branch
Tel. No. 703-308-9390 ext. 114

The request for issuing the above-identified correction(s) is hereby:
Note your decision on the appropriate box.

- ☒ **Approved** — All changes apply.
- ☐ **Approved in Part** — Specify below which changes **do not** apply.
- ☐ **Denied** — State the reasons for denial below.

Comments:

SPE

2822
Art Unit

UNITED STATES PATENT AND TRADEMARK OFFICE

Commissioner for Patents
United States Patent and Trademark Office
P.O. Box 1450
Alexandria, VA 22313-1450
www.uspto.gov

COPY MAILED

JUN 13 2007

OFFICE OF PETITIONS

FOLEY AND LARDNER LLP
SUITE 500
3000 K STREET NW
WASHINGTON, DC 20007

In re Application of	:	
MURDIN, Andrew D.	:	
Application No. 11/142,306	:	DECISION ON PETITION
Filed: June 02, 2005	:	TO WITHDRAW
Attorney Docket No. **77813-27C-D /slr**	:	FROM RECORD
	:	

This is a decision on the Request to Withdraw as attorney or agent of record under 37 C.F.R. § 1.36(b), filed March 30, 2007.

The request is **NOT APPROVED** as moot.

A review of the file record indicates that the power of attorney to Foley & Lardner, LLP has been revoked by the assignee of the patent application on March 20, 2007. Accordingly, the request to withdraw under 37 C.F.R. § 1.36(b) is moot.

All future communications from the Office will continue to be directed to the below-listed address until otherwise notified by applicant.

Telephone inquires concerning this decision should be directed to Michelle R. Eason at 571-272-4231.

Terri Williams

Terri Williams
Petitions Examiner
Office of Petitions

cc: **SMART & BIGGAR**
P.O. BOX 2999, STATION D
900-55 METCALFE STREET
OTTAWA ON K1P5Y-6 CA CANADA

UNITED STATES PATENT AND TRADEMARK OFFICE

UNITED STATES DEPARTMENT OF COMMERCE
United States Patent and Trademark Office
Address: COMMISSIONER FOR PATENTS
P.O. Box 1450
Alexandria, Virginia 22313-1450
www.uspto.gov

SMART & BIGGAR
P.O. BOX 2999, STATION D
900-55 METCALFE STREET
OTTAWA, ON K1P 5Y6
CANADA

Mail Date: 06/18/2010

Applicant	: Andrew D. Murdin	: DECISION ON REQUEST FOR
Patent Number	: 7662391	: RECALCULATION of PATENT
Issue Date	: 02/16/2010	: TERM ADJUSTMENT IN VIEW
Application No	: 11/142,306	: OF WYETH AND NOTICE OF INTENT TO
Filed	: 06/02/2005	: ISSUE CERTIFICATE OF CORRECTION
		:

The Request for Recalculation is **GRANTED** to the extent indicated.

The patent term adjustment has been determined to be **541** days. The USPTO will *sua sponte* issue a certificate of correction reflecting the amount of PTA days determined by the recalculation.

Prior to the issuance of the certificate of correction, the USPTO will afford patentee an opportunity to be heard and request reconsideration. Accordingly, patentee has **one month or thirty (30) days**, whichever is longer, to file a request for reconsideration of this patent term adjustment calculation. See 35 U.S.C. 154(b)(3)(B)(ii) and 37 CFR 1.322(a)(4). No extensions of time will be granted under 37 CFR 1.136.

Patentee should use document code PET.OP if electronically filing a request for reconsideration of this patent term adjustment calculation. The patentee must also include the information required by 37 CFR 1.705(b)(2) and the fee required by 37 CFR 1.18(e). If patentee does not file a timely request for reconsideration of this patent term adjustment calculation including the information required by 37 CFR 1.705(b)(2) and the fee required by 37 CFR 1.18(e), the USPTO will issue a certificate of correction reflecting the PTA determination noted above.

Patentee should be aware that in order to preserve the right to review in the United States District Court for the District of Columbia of the USPTO patent term adjustment determination, patentee must ensure that he or she also take the steps required under 35 U.S.C. 154(b)(4)(A) in a timely manner. Nothing in the request for recalculation should be construed as providing an alternative time frame for commencing a civil action under 35 U.S.C. 154(b)(4)(A).

Any questions concerning this decision should be directed to the Office of Patent Legal Administration at 571-272-7702.

UNITED STATES PATENT AND TRADEMARK OFFICE

UNITED STATES DEPARTMENT OF COMMERCE
United States Patent and Trademark Office
Address: COMMISSIONER FOR PATENTS
P.O. Box 1450
Alexandria, Virginia 22313-1450
www.uspto.gov

APPLICATION NO.	FILING DATE	FIRST NAMED INVENTOR	ATTORNEY DOCKET NO.	CONFIRMATION NO.
11/142,318	06/02/2005	Yoshihiro Kikuchi	273476US2SRD CONT	7954

7590 07/02/2009
OBLON, SPIVAK, MCCLELLAND MAIER & NEUSTADT, P.C.
1940 DUKE STREET
ALEXANDRIA, VA 22314

EXAMINER
PATEL, NIHAR P

ART UNIT	PAPER NUMBER
2416	

NOTIFICATION DATE	DELIVERY MODE
07/02/2009	ELECTRONIC

DECISION GRANTING PETITION UNDER 37 CFR 1.138(d)

The declaration of express abandonment is recognized

This is in response to the petition under 37 CFR 1.138(d), requesting for a refund of any previously paid search fee and excess claims fee in the above-identified application.

The petition is granted.

The express abandonment is recognized. Any previously paid search fee and excess claims fee are hereby refunded.

Telephone inquiries should be directed to the Office of Data Management at (571) 272-4200.

Betty Powell

Patent Publication Branch
Office of Data Management

Adjustment date: 06/30/2009 BPOWELL
06/03/2005 FFANHEIN 00000043 11142318
02 FC:1111 -500.00 OP
04 FC:1201 -1600.00 OP
05 FC:1202 -200.00 OP

Adjustment date: 06/30/2009 BPOWELL
06/03/2005 FFANHEIN 00000043 11142318
02 FC:1111 -500.00 OP
04 FC:1201 -1600.00 OP
05 FC:1202 -200.00 OP

FORM PET651G (Rev. 08/07)

UNITED STATES PATENT AND TRADEMARK OFFICE

Commissioner for Patents
United States Patent and Trademark Office
P.O. Box 1450
Alexandria, VA 22313-1450
www.uspto.gov

VENABLE LLP
P.O. BOX 34385
WASHINGTON, DC 20043-9998

MAILED

SEP 29 2009

OFFICE OF PETITIONS

ON PETITION

In re Application of :
Alvin H. Schmaier et al :
Application No. 11/142,364 :
Filed: June 2, 2005 :
Attorney Docket No. 32921-216352 :

This is a decision on the petition under 37 CFR 1.137(b), filed August 10, 2009, to revive the above-identified application.

The petition is **GRANTED.**

The above-identified application became abandoned for failure to reply in a timely manner to the non-final Office action mailed October 15, 2008, which set a shortened statutory period for reply of three (3) months. No extension of time under the provisions of 37 CFR 1.136(a) was obtained. Accordingly, the above-identified application became abandoned on January 16, 2009.

The file does not indicate a change of address has been submitted, although the address given on the petition differs from the address of record. If appropriate, a change of address should be filed in accordance with MPEP 601.03. A courtesy copy of this decision is being mailed to the address given on the petition; however, the Office will mail all future correspondence solely to the address of record.

Telephone inquiries concerning this decision should be directed to Irvin Dingle at (571) 272-3210.

This matter is being referred to Technology Center AU 1654 for further processing.

Irvin Dingle
Petitions Examiner
Office of Petitions

cc: Marshall, Gerstein & Borun LLP
233 S. Wacker Drive, Suite 6300
Sears Tower
Chicago, IL 60606-6357

UNITED STATES PATENT AND TRADEMARK OFFICE

Commissioner for Patents
United States Patent and Trademark Office
P.O. Box 1450
Alexandria, VA 22313-1450
www.uspto.gov

MORGAN LEWIS & BOCKIUS LLP
1111 PENNSYLVANIA AVENUE NW
WASHINGTON DC 20004

COPY MAILED

JUN 10 2008

OFFICE OF PETITIONS

In re Application of Hoon Jeong Application No. 11/142365 Filed: 06/02/2005 Attorney Docket No. 041993-5213-01	: : : : :	DECISION ON PETITION UNDER 37 CFR 1.78(a)(3)

This is a decision on the petition under 37 CFR § 1.78(a)(3) , filed on April 24, 2008, to accept an unintentionally delayed claim under 35 U.S.C. § 120 for benefit of priority to the prior-filed applications set forth in the concurrently filed amendment.

The petition is **DISMISSED AS MOOT.**

Petitioner asserts that a typographical error was made in the claim to the benefit of prior-filed Application No. 10/438,855, in that an incorrect filing date for the prior-filed application was specified in the benefit claim as presented in a preliminary amendment present on filing of the original application papers. Petitioner further asserts "Office records no longer include the correct benefit claim due to previous confusions regarding the correct benefit claim data." Petitioner requests correction of the benefit claim to indicate the filing date of the prior-filed application as May 16, 2003, rather than March 16, 2003.

It is noted that the correct application number for the prior-filed nonprovisional application to which benefit is claimed was provided on filing. Although the filing date for the prior-filed nonprovisional application to which benefit is claimed was not correctly stated in the benefit claim as present on filing, no petition under 37 CFR 1.78(a)(3) or surcharge is required when the applicant is correcting the filing date of a prior-filed international, nonprovisional, or provisional application, because the Office was able to schedule the application for publication with the information provided. As the petition was not required, it will be dismissed as moot.

In the present case, the Office noted the correct filing date of the prior-filed nonprovisional application as shown by its inclusion on the filing receipt.

A review of Office records reveals that the benefit claim therein reflects the correct application number and filing date. A copy of the corrected Filing Receipt, reflecting the claim of benefit as currently contained in Office records, is enclosed for petitioner's convenience.

In view of the above, no petition fee is necessary. The petition fee has not been charged.

Any questions concerning this decision on petition may be directed to Senior Petitions Attorney Douglas I. Wood at (571) 272-3231. As the issue fee has been paid, all other inquiries concerning the status of the application should be directed to the Office of Data Management.

This application is being referred to the Office of Data Management for processing into a patent.

Anthony Knight
Supervisor
Office of Petitions

ENCL: CORRECTED FILING RECEIPT

UNITED STATES PATENT AND TRADEMARK OFFICE

UNITED STATES DEPARTMENT OF COMMERCE
United States Patent and Trademark Office
Address: COMMISSIONER FOR PATENTS
P.O. Box 1450
Alexandria, Virginia 22313-1450
www.uspto.gov

APPLICATION NUMBER	FILING or 371(c) DATE	GRP ART UNIT	FIL FEE REC'D	ATTY.DOCKET.NO	TOT CLAIMS	IND CLAIMS
11/142,365	06/02/2005	2871	1300	041993-5213-01	6	1

CONFIRMATION NO. 6871

CORRECTED FILING RECEIPT

9629
MORGAN LEWIS & BOCKIUS LLP
1111 PENNSYLVANIA AVENUE NW
WASHINGTON, DC 20004

OC000000030307181

Date Mailed: 06/10/2008

Receipt is acknowledged of this non-provisional patent application. The application will be taken up for examination in due course. Applicant will be notified as to the results of the examination. Any correspondence concerning the application must include the following identification information: the U.S. APPLICATION NUMBER, FILING DATE, NAME OF APPLICANT, and TITLE OF INVENTION. Fees transmitted by check or draft are subject to collection. Please verify the accuracy of the data presented on this receipt. **If an error is noted on this Filing Receipt, please submit a written request for a Filing Receipt Correction. Please provide a copy of this Filing Receipt with the changes noted thereon. If you received a "Notice to File Missing Parts" for this application, please submit any corrections to this Filing Receipt with your reply to the Notice. When the USPTO processes the reply to the Notice, the USPTO will generate another Filing Receipt incorporating the requested corrections**

Applicant(s)
Hoon Jeong, Gyeongsangbuk-Do, KOREA, REPUBLIC OF;

Assignment For Published Patent Application
LG PHILIPS LCD CO., LTD.

Power of Attorney: The patent practitioners associated with Customer Number 009629

Domestic Priority data as claimed by applicant
This application is a DIV of 10/438,855 05/16/2003 PAT 6,927,819

Foreign Applications
REPUBLIC OF KOREA 28742/2002 05/23/2002.

If Required, Foreign Filing License Granted: 06/14/2005

The country code and number of your priority application, to be used for filing abroad under the Paris Convention, is **US 11/142,365**

Projected Publication Date: Not Applicable

Non-Publication Request: No

Early Publication Request: No

Title

TRANSFLECTIVE LIQUID CRYSTAL DISPLAY DEVICE AND METHOD OF FABRICATING THE SAME

Preliminary Class

349

PROTECTING YOUR INVENTION OUTSIDE THE UNITED STATES

Since the rights granted by a U.S. patent extend only throughout the territory of the United States and have no effect in a foreign country, an inventor who wishes patent protection in another country must apply for a patent in a specific country or in regional patent offices. Applicants may wish to consider the filing of an international application under the Patent Cooperation Treaty (PCT). An international (PCT) application generally has the same effect as a regular national patent application in each PCT-member country. The PCT process **simplifies** the filing of patent applications on the same invention in member countries, but **does not result** in a grant of "an international patent" and does not eliminate the need of applicants to file additional documents and fees in countries where patent protection is desired.

Almost every country has its own patent law, and a person desiring a patent in a particular country must make an application for patent in that country in accordance with its particular laws. Since the laws of many countries differ in various respects from the patent law of the United States, applicants are advised to seek guidance from specific foreign countries to ensure that patent rights are not lost prematurely.

Applicants also are advised that in the case of inventions made in the United States, the Director of the USPTO must issue a license before applicants can apply for a patent in a foreign country. The filing of a U.S. patent application serves as a request for a foreign filing license. The application's filing receipt contains further information and guidance as to the status of applicant's license for foreign filing.

Applicants may wish to consult the USPTO booklet, "General Information Concerning Patents" (specifically, the section entitled "Treaties and Foreign Patents") for more information on timeframes and deadlines for filing foreign patent applications. The guide is available either by contacting the USPTO Contact Center at 800-786-9199, or it can be viewed on the USPTO website at http://www.uspto.gov/web/offices/pac/doc/general/index.html.

For information on preventing theft of your intellectual property (patents, trademarks and copyrights), you may wish to consult the U.S. Government website, http://www.stopfakes.gov. Part of a Department of Commerce initiative, this website includes self-help "toolkits" giving innovators guidance on how to protect intellectual property in specific countries such as China, Korea and Mexico. For questions regarding patent enforcement issues, applicants may call the U.S. Government hotline at 1-866-999-HALT (1-866-999-4158).

LICENSE FOR FOREIGN FILING UNDER

Title 35, United States Code, Section 184

Title 37, Code of Federal Regulations, 5.11 & 5.15

GRANTED

The applicant has been granted a license under 35 U.S.C. 184, if the phrase "IF REQUIRED, FOREIGN FILING LICENSE GRANTED" followed by a date appears on this form. Such licenses are issued in all applications where

the conditions for issuance of a license have been met, regardless of whether or not a license may be required as set forth in 37 CFR 5.15. The scope and limitations of this license are set forth in 37 CFR 5.15(a) unless an earlier license has been issued under 37 CFR 5.15(b). The license is subject to revocation upon written notification. The date indicated is the effective date of the license, unless an earlier license of similar scope has been granted under 37 CFR 5.13 or 5.14.

This license is to be retained by the licensee and may be used at any time on or after the effective date thereof unless it is revoked. This license is automatically transferred to any related applications(s) filed under 37 CFR 1.53(d). This license is not retroactive.

The grant of a license does not in any way lessen the responsibility of a licensee for the security of the subject matter as imposed by any Government contract or the provisions of existing laws relating to espionage and the national security or the export of technical data. Licensees should apprise themselves of current regulations especially with respect to certain countries, of other agencies, particularly the Office of Defense Trade Controls, Department of State (with respect to Arms, Munitions and Implements of War (22 CFR 121-128)); the Bureau of Industry and Security, Department of Commerce (15 CFR parts 730-774); the Office of Foreign AssetsControl, Department of Treasury (31 CFR Parts 500+) and the Department of Energy.

NOT GRANTED

No license under 35 U.S.C. 184 has been granted at this time, if the phrase "IF REQUIRED, FOREIGN FILING LICENSE GRANTED" DOES NOT appear on this form. Applicant may still petition for a license under 37 CFR 5.12, if a license is desired before the expiration of 6 months from the filing date of the application. If 6 months has lapsed from the filing date of this application and the licensee has not received any indication of a secrecy order under 35 U.S.C. 181, the licensee may foreign file the application pursuant to 37 CFR 5.15(b).

UNITED STATES PATENT AND TRADEMARK OFFICE

Commissioner for Patents
United States Patent and Trademark Office
P.O. Box 1450
Alexandria, VA 22313-1450
www.uspto.gov

MAILED

AUG 1 1 2005
Director's Office
Group 3700

Emanuel S. Kemeny
1400 S. Joyce St.
Apt. # 602
Arlington, VA 22202

In re application of Emanuel S. Kemeny	: :	**DECISION ON PETITION** **TO MAKE SPECIAL**
	:	**UNDER 37 CFR. 1.102(c)**
Serial Number: 11/142397 Filed: June 02, 2005	: :	

For: **ADHESIVE BANDAGE AND PACKAGING FOR-HANDED PLACEMENT**

This is a decision on the petition filed on June 24, 2005, under 37 CFR. 1.102(c) to make special the above identified application because of the age/health of the applicant. Since the requirements of the M.P.E.P Section 708.02 IV have been met, the petition will be GRANTED.

The examiner is directed (1) to make an interference search for possible interfering applications, (2) to promptly examine this application out of turn, and (3) if any interfering application is discovered, to examine such application simultaneously and state in the first official letter of such application that it is being taken out of turn because of a possible interference.

Petitioner is advised that this application will continue to be special, throughout its entire prosecution and pendency, including interference or appeal, if any, only is Petitioner makes a prompt bona-fide effort, in response to each Office action, to place the application in condition for allowance, even if it is necessary to conduct an interview with the Examiner to accomplish this purpose.

Summary: Decision on Petition **GRANTED**.

Richard A. Bertsch
Director
Technology Center 3700
(571) 272-3750

rt: 8/11/05

SPE RESPONSE FOR CERTIFICATE OF CORRECTION

Paper No.: _____

DATE : 1/22/10

TO SPE OF : ART UNIT 2874 Le Uyen Chau (Spe)

SUBJECT : Request for Certificate of Correction for Appl. No.: 11/142421 Patent No.: 7500792

Please respond to this request for a certificate of correction within 7 days.

FOR IFW FILES:

Please review the requested changes/corrections as shown in the **COCIN** document(s) in the IFW application image. No new matter should be introduced, nor should the scope or meaning of the claims be changed.

Please complete the response (see below) and forward the completed response to scanning using document code **COCX**.

FOR PAPER FILES:

Please review the requested changes/corrections as shown in the attached certificate of correction. Please complete this form (see below) and forward it with the file to:

Certificates of Correction Branch (CofC)
Randolph Square – 9D10-A
Palm Location 7580

Certificates of Correction Branch
703-756-1571 _____

Thank You For Your Assistance

The request for issuing the above-identified correction(s) is hereby:
Note your decision on the appropriate box.

- ☒ **Approved** — **All** changes apply.
- ☐ **Approved in Part** — Specify below which changes **do not** apply.
- ☐ **Denied** — State the reasons for denial below.

Comments: The Request for Certificate of Correction for the purpose of correcting the "opening 40" labeling in figure 1 and in specification.

/UYEN-CHAU N. LE/ — **SPE**

2874 — **Art Unit**

UNITED STATES PATENT AND TRADEMARK OFFICE

Commissioner for Patents
United States Patent and Trademark Office
P.O. Box 1450
Alexandria, VA 22313-1450
www.uspto.gov

MAILED

JUL 18 2005

Group 3700

Walter A. Hackler
2372 S.E. Bristol Street, Suite B
Newport Beach, CA 92660-0755

In re application of Wallace W. Grabbe	:	**DECISION ON PETITION TO MAKE SPECIAL UNDER 37 CFR. 1.102(c)**
Serial Number: 11/142425 Filed: June 01, 2005	:	

For: **ADJUSTABLE COMPRESSION RATIO APPARATUS**

This is a decision on the petition filed on June 01, 2005, under 37 CFR. 1.102(c) to make special the above identified application because of the age/health of the applicant. Since the requirements of the M.P.E.P Section 708.02 IV have been met, the petition will be GRANTED.

The examiner is directed (1) to make an interference search for possible interfering applications, (2) to promptly examine this application out of turn, and (3) if any interfering application is discovered, to examine such application simultaneously and state in the first official letter of such application that it is being taken out of turn because of a possible interference.

Petitioner is advised that this application will continue to be special, throughout its entire prosecution and pendency, including interference or appeal, if any, only is Petitioner makes a prompt bona-fide effort, in response to each Office action, to place the application in condition for allowance, even if it is necessary to conduct an interview with the Examiner to accomplish this purpose.

Summary: Decision on Petition **GRANTED**.

Richard A. Bertsch

Richard A. Bertsch
Director
Technology Center 3700
(571) 272-3750

rt: 7/14/05

UNITED STATES PATENT AND TRADEMARK OFFICE

Commissioner for Patents
United States Patent and Trademark Office
P.O. Box 1450
Alexandria, VA 22313-1450
www.uspto.gov

DANIEL L. DAWES
MYERS DAWER ANDRAS & SHERMAN LLP
SUITE 1150
19900 MACARTHUR BOULEVARD
IRVINE, CA 92612

COPY MAILED
MAY 0 3 2006
OFFICE OF PETITIONS

In re Application of	:	
Wells, Jan-Marie	:	DECISION ON PETITION
Application No. 11/142,427	:	TO WITHDRAW
Filed: June 1, 2005	:	FROM RECORD
Attorney Docket No. WEL1.PAU.02	:	

This is a decision on the request to withdraw as attorney of record under 37 C.F.R. § 1.36, filed October 3, 2005.

The request is **NOT APPROVED**.

A grantable request to withdraw as attorney of record must be signed by every attorney seeking to withdraw or contain a clear indication that one attorney is signing on behalf of another/others. A request to withdraw will not be approved unless at least 30 (thirty) days would remain between the date of approval and the later of the expiration date of a time to file a response or the expiration date of the maximum time period which can be extended under 37 C.F.R. § 1.136(a).

The request cannot be approved because petitioner failed to include a reason for the withdrawal.

All future communications from the Office will continue to be directed to the above-listed address until otherwise notified by applicant.

Telephone inquires concerning this decision should be directed to Petitions Examiner Liana Chase at 571-272-3206.

David Buoci
Petitions Examiner
Office of Petitions

Cc: JAN-MARIE WELLS
2960 CHAMPION WAY
UNIT #2209
TUSTIN, CA 92782

UNITED STATES PATENT AND TRADEMARK OFFICE

Commissioner for Patents
United States Patent and Trademark Office
P.O. Box 1450
Alexandria, VA 22313-1450
www.uspto.gov

DANIEL L. DAWES
MYERS DAWES ANDRAS & SHERMAN LLP
SUITE 1150
19900 MACARTHUR BOULEVARD
IRVINE, CA 92612

COPY MAILED

OCT 12 2006

OFFICE OF PETITIONS

In re Application of	:	
Wells, Jan-Marie	:	DECISION ON PETITION
Application No. 11/142,427	:	TO WITHDRAW
Filed: June 1, 2005	:	FROM RECORD
Attorney Docket No. WEL1.PAU.02	:	

This is a decision on the second Request to Withdraw as attorney or agent of record under 37 C.F.R.§ 1.36(b), filed June 22, 2006.

The request is **APPROVED**.

The request was signed by Daniel L. Dawes on behalf of all attorneys of record. All attorneys of record have been withdrawn. Applicant is reminded that there is no attorney of record at this time.

All future correspondence will be directed to the first named inventor Jan-Marie Wells at the address indicated below.

Telephone inquires concerning this decision should be directed to the undersigned at (571) 272-3206. All other inquires concerning either the examination or status of the application should be directed to the Technology Center.

Liana Chase Walsh
Petitions Examiner
Office of Petitions

Cc:

JAN-MARIE WELLS
2960 CHAMPION WAY
UNIT #2209
TUSTIN, CA 92782

UNITED STATES PATENT AND TRADEMARK OFFICE

Commissioner for Patents
United States Patent and Trademark Office
P.O. Box 1450
Alexandria, VA 22313-1450
www.uspto.gov

NORMAN P. SOLOWAY
HAYES SOLOWAY P.C.
3450 E. SUNRISE DRIVE, SUITE 140
TUCSON AZ 85718

MAILED

MAY 11 2009

OFFICE OF PETITIONS

In re Application of
PUTNAM, Everly Dean
Application No. 11/142,480
Filed: June 01, 2005
Attorney Docket No. **MEDUSA 07.06**

DECISION ON PETITION
TO WITHDRAW
FROM RECORD

This is a decision on the Request to Withdraw as attorney or agent of record under 37 C.F.R. § 1.36(b), filed April 10, 2009.

The request is **APPROVED**.

A grantable request to withdraw as attorney/agent of record must be signed by every attorney/agent seeking to withdraw or contain a clear indication that one attorney is signing on behalf of another/others. The Office requires the practitioner(s) requesting withdrawal to certify that he, she, or they have: (1) given reasonable notice to the client, prior to the expiration of the response period, that the practitioner(s) intends to withdraw from employment; (2) delivered to the client or a duly authorized representative of the client all papers and property (including funds) to which the client is entitled; and (3) notified the client of any responses that may be due and the time frame within which the client must respond, pursuant 37 CFR 10.40(c).

The request was signed by Norman P. Soloway on behalf of all attorneys of record. All attorneys/agents associated have been withdrawn. Applicant is reminded that there is no attorney of record at this time.

The request to change the correspondence address of record is not acceptable as the requested correspondence address is not that of: (1) the first named signing inventor; or (2) an intervening assignee of the entire interest under 37 C.F.R 3.71. All future communications from the Office will be directed to the first named signing inventor.

There is an outstanding Office action mailed November 25, 2008 that requires a reply from the applicant.

Telephone inquiries concerning this decision should be directed to Michelle R. Eason at 571-272-4231.

Michelle R. Eason
Paralegal Specialist
Office of Petitions

cc: **EVERLY DEAN PUTNAM**
4385 S.E. 16TH STREET
DES MOINES, IOWA 50320

cc: **MEDUSA SPECIAL PROJECTS, LLC**
9121 E. TANQUE VERDE ROAD
SUITE 105-419
TUCSAN, AZ 85749

UNITED STATES PATENT AND TRADEMARK OFFICE

COMMISSIONER FOR PATENTS
UNITED STATES PATENT AND TRADEMARK OFFICE
P.O. BOX 1450
ALEXANDRIA, VA 22313-1450
www.uspto.gov

Paper No.

Bristol-Myer Squibb Company
Route 206 & Province Line Road
Princeton NJ 08543

MAILED

MAR 31 2009

OFFICE OF PETITIONS

In re Patent No. 7,446,196	:	
Dong et al.	:	DECISION DISMISSING
Application No. 11/142,482	:	REQUEST FOR
Issue Date: November 4, 2008	:	RECONSIDERATION OF
Filed: June 1, 2005	:	PATENT TERM ADJUSTMENT
Attorney Docket No.: 010102.03	:	UNDER 37 CFR § 1.705(d)

This is a decision on the "REQUEST FOR RECONSIDERATION OF PATENT TERM ADJUSTMENT PERIOD IN GRANTED PATENT UNDER 37 C.F.R. §§1.181 & 705(d)," filed on November 24, 2008, requesting that the patent term adjustment determination for the above-identified patent be changed from four hundred and seventy-nine (479) to six hundred and thirty-five (635) days.

The request for reconsideration of patent term adjustment is **DISMISSED**.

STATUTE AND REGULATION

35 U.S.C. § 154(b) as amended by § 4402 of the American Inventors Protection Act of 1999[1] (AIPA) provides that:

> ADJUSTMENT OF PATENT TERM. –
> (1) PATENT TERM GUARANTEES. –
> (A) GUARANTEE OF PROMPT PATENT AND TRADEMARK OFFICE RESPONSES. – Subject to the limitations under paragraph (2), if the issue of an original patent is delayed due to the failure of the Patent and Trademark Office to –

[1] Public Law 106-113, 113 Stat. 1501, 1501A-557 through 1501A-560 (1999).

(i) provide at least one of the notifications under section 132 of this title or a notice of allowance under section 151 of this title not later than 14 months after –

(I) the date on which an application was filed under section 111(a) of this title; or

(II) the date on which an international application fulfilled the requirements of section 371 of this title;

(ii) respond to a reply under section 132, or to an appeal taken under section 134, within 4 months after the date on which the reply was filed or the appeal was taken;

(iii) act on an application within 4 months after the date of a decision by the Board of Patent Appeals and Interferences under section 134 or 135 or a decision by a Federal court under section 141, 145, or 146 in a case in which allowable claims remain in the application; or

(iv) issue a patent within 4 months after the date on which the issue fee was paid under section 151 and all outstanding requirements were satisfied, the term of the patent shall be extended 1 day for each day after the end of the period specified in clause (i), (ii), (iii), or (iv), as the case may be, until the action described in such clause is taken.

(B) GUARANTEE OF NO MORE THAN 3-YEAR APPLICATION PENDENCY. – Subject to the limitations under paragraph (2), if the issue of an original patent is delayed due to the failure of the United States Patent and Trademark Office to issue a patent within 3 years after the actual filing date of the application in the United States, not including –

(i) any time consumed by continued examination of the application requested by the applicant under section 132(b);

(ii) any time consumed by a proceeding under section 135(a), any time consumed by the imposition of an order under section 181, or any time consumed by appellate review by the Board of Patent Appeals and Interferences or by a Federal court; or

(iii) any delay in the processing of the application by the United States Patent and Trademark Office requested by the applicant except as permitted by paragraph (3)(C), the term of the patent shall be extended 1 day for each day after the end of that 3-year period until the patent is issued.

(C) GUARANTEE OR ADJUSTMENTS FOR DELAYS DUE TO INTERFERENCES, SECRECY ORDERS, AND APPEALS. — Subject to the limitations under paragraph (2), if the issue of an original patent is delayed due to —

(i) a proceeding under section 135(a);

(ii) the imposition of an order under section 181; or

(iii) appellate review by the Board of Patent Appeals and Interferences or by a Federal court in a case in which the patent was issued under a decision in the review reversing an adverse determination of patentability, the term of the patent shall be extended 1 day for each day of the pendency of the proceeding, order, or review, as the case may be.

(2) LIMITATIONS. —

(A) IN GENERAL. — To the extent that periods of delay attributable to grounds specified in paragraph (1) overlap, the period of any adjustment granted under this subsection shall not exceed the actual number of days the issuance of the patent was delayed.

The implementing regulation, **37 CFR § 1.702**, provides grounds for adjustment of patent term due to examination delay under the Patent Term Guarantee Act of 1999 (original applications, other than designs, filed on or after May 29, 2000).

(a) Failure to take certain actions within specified time frames. Subject to the provisions of 35 U.S.C. 154(b) and this subpart, the term of an original patent shall be adjusted if the issuance of the patent was delayed due to the failure of the Office to:

(1) Mail at least one of a notification under 35 U.S.C. 132 or a notice of allowance under 35 U.S.C. 151 not later than fourteen months after the date on which the application was filed under 35 U.S.C. 111(a) or fulfilled the requirements of 35 U.S.C. 371 in an international application;

(b) Failure to issue a patent within three years of the actual filing date of the application. Subject to the provisions of 35 U.S.C. 154(b) and this subpart, the term of an original patent shall be adjusted if the issuance of the patent was delayed due to the failure of the Office to issue a patent within three years after the date on which

the application was filed under 35 U.S.C. 111(a) or the national stage commenced under 35 U.S.C. 371(b) or (f) in an international application, but not including[2]:

In pertinent part, 37 CFR § 1.703 provides for calculation of the periods, as follows:

Period of adjustment of patent term due to examination delay.

(a) The period of adjustment under § 1.702(a) is the sum of the following periods:

(1) The number of days, if any, in the period beginning on the day after the date that is fourteen months after the date on which the application was filed under 35 U.S.C. 111(a) or fulfilled the requirements of 35 U.S.C. 371 and ending on the date of mailing of either an action under 35 U.S.C. 132, or a notice of allowance under 35 U.S.C. 151, whichever occurs first;

(b) The period of adjustment under § 1.702(b) is the number of days, if any, in the period beginning on the day after the date that is three years after the date on which the application was filed under 35 U.S.C. 111(a) or the national stage commenced under 35 U.S.C. 371(b) or (f) in an international application and ending on the date a patent was issued, but not including the sum of the following periods[3]:

---

[2] (1) Any time consumed by continued examination of the application under 35 U.S.C. 132(b);

(2) Any time consumed by an interference proceeding under 35 U.S.C. 135(a);

(3) Any time consumed by the imposition of a secrecy order under 35 U.S.C. 181;

(4) Any time consumed by review by the Board of Patent Appeals and Interferences or a Federal court; or

(5) Any delay in the processing of the application by the Office that was requested by the applicant.

[3] (1) The number of days, if any, in the period beginning on the date on which a request for continued examination of the application under 35 U.S.C. 132(b) was filed and ending on the date the patent was issued;

(2)(i) The number of days, if any, in the period beginning on the date an interference was declared or redeclared to involve the application in the interference and ending on the date that the interference was terminated with respect to the application; and (ii) The number of days, if any, in the period beginning on the date prosecution in the application was suspended by the Office due to interference proceedings under 35 U.S.C. 135(a) not involving the application and ending on the date of the termination of the suspension;

(3)(i) The number of days, if any, the application was maintained in a sealed condition under 35 U.S.C. 181; (ii) The number of days, if any, in the period beginning on the date of mailing of an examiner's answer under § 41.39 of this title in the application under secrecy order and ending on the date the secrecy order was removed; (iii) The number of days, if any, in the period beginning on the date applicant was notified that an interference would be declared but for the secrecy order and ending on the date the secrecy order was removed; and (iv) The number of days, if any, in the period beginning on the date of notification under § 5.3(c) of this chapter and ending on the date of mailing of the notice of allowance under 35 U.S.C. 151; and,

37 CFR 1.703(f) provides that:

> The adjustment will run from the expiration date of the patent as set forth in 35 U.S.C. 154(a)(2). To the extent that periods of delay attributable to the grounds specified in §1.702 overlap, the period of adjustment granted under this section shall not exceed the actual number of days the issuance of the patent was delayed. The term of a patent entitled to adjustment under § 1.702 and this section shall be adjusted for the sum of the periods calculated under paragraphs (a) through (e) of this section, to the extent that such periods are not overlapping, less the sum of the periods calculated under § 1.704. The date indicated on any certificate of mailing or transmission under § 1.8 shall not be taken into account in this calculation.

OPINION

On November 4, 2008, the application matured into U.S. Patent No. 7,446,196, with a revised patent term adjustment of 479 days.

On November 24, 2008, patentees timely submitted this request for reconsideration of patent term adjustment (with required fee) within two months of the issue date of the patent. Patentees argue, citing Wyeth v. Dudas, 580 F. Supp. 2d 138, 88 U.S.P.Q. 2d 1538 (D.D.C. 2008), that it is entitled to a total patent term adjustment of 635 days, which is the sum of the 156 days of patent term adjustment due to exceeding the three year pendency plus 507 days due to USPTO delay in prosecution, minus the 28 days of applicant delay.

It is noted that the instant patent issued 3 years and 156 days after its filing date. However, any days of delay for Office issuance of the patent more than 3 years after the filing date of the application, which overlap, with the days of patent term adjustment accorded prior to the issuance of the patent will not

---

(4) The number of days, if any, in the period beginning on the date on which a notice of appeal to the Board of Patent Appeals and Interferences was filed under 35 U.S.C. 134 and § 41.31 of this title and ending on the date of the last decision by the Board of Patent Appeals and Interferences or by a Federal court in an appeal under 35 U.S.C. 141 or a civil action under 35 U.S.C. 145, or on the date of mailing of either an action under 35 U.S.C. 132, or a notice of allowance under 35 U.S.C. 151, whichever occurs first, if the appeal did not result in a decision by the Board of Patent Appeals and Interferences.

result in any additional patent term adjustment. Further, in considering the overlap, the entire period during which the application was pending (except for periods excluded under 35 U.S.C. 154(b)(1)(B)(i)-(iii), and not just the period beginning three years after the actual filing date of the application, is the period of delay under 35 U.S.C. 154(b)(1)(B) in determining whether periods of delay overlap under 35 U.S.C. 154(b)(2)(A). See 35 U.S.C. 154(b) (1)(B); 35 U.S.C. 154(b)(2)(A); and 37 CFR 1.703(f). See also Revision of Patent Term Extension and Patent Term Adjustment Provisions; Final Rule, 69 Fed. Reg. 21704 (April 22, 2004). In this instance, the period of delay of 156 days attributable to the delay in the issuance of the patent overlaps with the adjustment of 507 days attributable to grounds specified in § 1.702(a)(1). Thus, at issuance, no additional period of adjustment was entered.

It follows that the proper period of adjustment for Office delay was properly calculated to be 507 days.

In view thereof, the patent issued with a revised patent term adjustment of 479 (507 - 28) days.

Patentees request recalculation of the patent term adjustment based on the decision in Wyeth v. Dudas, 580 F. Supp. 2d 138, 88 U.S.P.Q. 2d 1538 (D.D.C. 2008). Patentees assert that pursuant to Wyeth, a PTO delay under §154(b)(1)(A) overlaps with a delay under §154(b)(1)(B) only if the delays "occur on the same day." Patentees maintain that the period of adjustment due to the Three Year Delay by the Office, pursuant to 37 CFR § 1.703(b), of 156 days and the period of adjustment due to examination delay, pursuant to 37 CFR §1.702(a), of 507 days do not overlap as these periods do not occur on the same day.

Specifically, patentees argue that the period of adjustment due to the Three Year Delay by the Office, pursuant to 37 CFR § 1.703(b), is 156 days.[4] This 156 day period is calculated based on the application having been filed under 35 U.S.C. 111(a) on June 1, 2005, and the patent having not issued until November 4, 2008, three years and 156 days later.

In short, patentees do not agree with the Office's determination that the period of delay of 156 days attributable to the delay

[4] See petition, page 2.

in the issuance of the patent overlaps with the adjustment of 507 days attributable to grounds specified in § 1.702(a)(1).

The period of reduction of 28 days for applicant delay is not in dispute. Patentees maintain that the period of Office delay is the sum of the period of Three Years Delay (156 days) and the period of Examination Delay (507 days) to the extent that these periods of delay are not overlapping.

As such, patentees assert entitlement to a patent term adjustment of 635 days ((156 + 507) reduced by 28).

The Office agrees that the patent issued 3 years and 156 days after its filing date. The Office agrees that the actions detailed above were not taken within the specified timeframes, and thus, the entries of periods of adjustment of 507 days for Office delay and 28 days for Applicant delay are correct. At issue is whether the period of delay of 156 days attributable to the delay in the issuance of the patent overlaps with the adjustment of 507 days attributable to grounds specified in § 1.702(a)(1).

The Office maintains that the period of 156 attributable to delay in the issuance of the patent overlaps with the 507 days attributable to grounds specified in § 1.702(a)(1). Patentees' interpretation of the period of overlap has been considered. Patentees' calculation of the period of overlap is inconsistent with the Office's interpretation of this provision. 35 U.S.C. 154(b)(2)(A) limits the adjustment of patent term, as follows:

> to the extent that the periods of delay attributable to grounds specified in paragraph (1) overlap, the period of any adjustment granted under this subsection shall not exceed the actual number of days the issuance of the patent was delayed.

Likewise, 37 CFR 1.703(f) provides that:

> To the extent that periods of delay attributable to the grounds specified in §1.702 overlap, the period of adjustment granted under this section shall not exceed the actual number of days the issuance of the patent was delayed.

As explained in *Explanation of 37 CFR 1.703(f) and of the United States Patent and Trademark Office Interpretation of 35 U.S.C. 154(b)(2)(A)*, 69 Fed. Reg. 34283 (June 21, 2004), the Office interprets 35 U.S.C. 154(b)(2)(A) as permitting either patent term adjustment under 35 U.S.C. 154(b)(1)(A)(i)-(iv), or patent term adjustment under 35 U.S.C. 154(b)(1)(B), but not as permitting patent term adjustment under both 35 U.S.C. 154(b)(1)(A)(i)-(iv) and 154(b)(1)(B). Accordingly, the Office implements the overlap provision as follows:

> If an application is entitled to an adjustment under 35 U.S.C. 154(b)(1)(B), the entire period during which the application was pending (except for periods excluded under 35 U.S.C. 154(b)(1)(B)(i)-(iii)), and not just the period beginning three years after the actual filing date of the application, is the period of delay under 35 U.S.C. 154(b)(1)(B) in determining whether periods of delay overlap under 35 U.S.C. 154(b)(2)(A). Thus, any days of delay for Office issuance of the patent more than 3 years after the filing date of the application, which overlap with the days of patent term adjustment accorded prior to the issuance of the patent will not result in any additional patent term adjustment. See 35 U.S.C. 154(b)(1)(B), 35 U.S.C. 154(b)(2)(A), and 37 CFR § 1.703(f). See *Changes to Implement Patent Term Adjustment Under Twenty Year Term; Final Rule*, 65 Fed. Reg. 54366 (Sept. 18, 2000). See also *Revision of Patent Term Extension and Patent Term Adjustment Provisions; Final Rule*, 69 Fed. Reg. 21704 (April 22, 2004), 1282 Off. Gaz. Pat. Office 100 (June 1, 2004). See also *Explanation of 37 CFR 1.703(f) and of the United States Patent and Trademark Office Interpretation of 35 U.S.C. 154(b)(2)(A)*, 69 Fed. Reg. 34283 (June 21, 2004).

The current wording of § 1.703(f) was revised in response to the misinterpretation of this provision by a number of applicants. The rule was slightly revised to more closely track the corresponding language of 35 U.S.C. 154(b)(2)(A). The relevant portion differs only to the extent that the statute refers back to provisions of the statute whereas the rule refers back to sections of the rule. This was not a substantive change to the rule nor did it reflect a change of the Office's interpretation of 35 U.S.C. 154(b)(2)(A). As stated in the *Explanation of 37 CFR 1.703(f) and of the United States Patent and Trademark Office Interpretation of 35 U.S.C. 154(b)(2)(A)*, the Office has

consistently taken the position that if an application is entitled to an adjustment under the three-year pendency provision of 35 U.S.C. 154(b)(1)(B), the entire period during which the application was pending before the Office (except for periods excluded under 35 U.S.C. 154(b)(1)(B)(i)-(iii)), and not just the period beginning three years after the actual filing date of the application, is the relevant period under 35 U.S.C. 154(b)(1)(B) in determining whether periods of delay "overlap" under 35 U.S.C. 154(b)(2)(A).

This interpretation is consistent with the statute. Taken together the statute and rule provide that to the extent that periods of delay attributable to grounds specified in 35 U.S.C. 154(b)(1) and in corresponding §1.702 overlap, the period of adjustment granted shall not exceed the actual number of days the issuance of the patent was delayed. The grounds specified in these sections cover the A) guarantee of prompt Patent and Trademark Office responses, B) guarantee of no more than 3 year application pendency, and C) guarantee or adjustments for delays due to interference, secrecy orders and appeals. A section by section analysis of 35 U.S.C. 154(b)(2)(A) specifically provides that:

> Section 4402 imposes limitations on restoration of term. In general, pursuant to [35 U.S.C.] 154(b)(2)(A)-(C), total adjustments granted for restorations under [35 U.S.C. 154](b)(1) are reduced as follows: (1) To the extent that there are multiple grounds for extending the term of a patent that may exist simultaneously (e.g., delay due to a secrecy order under [35 U.S.C.] 181 and administrative delay under [35 U.S.C.] 154(b)(1)(A)), the term should not be extended for each ground of delay but only for the actual number of days that the issuance of a patent was delayed; See 145 Cong. Rec. S14,718[5]

As such, the period for over 3 year pendency does not overlap only to the extent that the actual dates in the period beginning three years after the date on which the application was filed overlap with the actual dates in the periods for failure of the Office to take action within specified time frames. In other

---

[5] The AIPA is title IV of the Intellectual Property and Communications Omnibus Reform Act of 1999 (S. 1948), which was incorporated and enacted as law as part of Pub. L. 106-113. The Conference Report for H.R. 3194, 106th Cong. 1st Sess. (1999), which resulted in Pub. L. 106-113, does not contain any discussion (other than the incorporated language) of S. 1948. A section-by-section analysis of S. 1948, however, was printed in the Congressional Record at the request of Senator Lott, See 145 Cong. Rec. S14,708-26 (1999)(daily ed. Nov. 17, 1999).

words, consideration of the overlap does not begin three years after the filing date of the application. Treating the relevant period as starting on June 1, 2008, the date that is 3 years after the actual filing date of the application, is incorrect.

In this instance, the relevant period under 35 U.S.C. 154(b)(1)(B) in determining whether periods of delay "overlap" under 35 U.S.C. 154(b)(2)(A) is the entire period during which the application was pending before the Office, June 1, 2005 to November 4, 2008. (There were no periods excluded under 35 U.S.C. 154(b)(1)(B)(i)-(iii)). During that time, the issuance of the patent was delayed by 507 days, not 507 + 156 days. The Office took 14 months and 507 days to issue a first Office action. Otherwise, the Office took all actions set forth in 37 C.F.R. § 1.702(a) within the prescribed timeframes. Nonetheless, given the initial 507 days of Office delay and the 28 days of applicant delay and the time allowed within the timeframes for processing and examination, the patent issued, three years and 156 days after its filing date. The Office did not delay 507 days and then an additional 156 days. Accordingly, 507 days of patent term adjustment (not 507 and 156 days) was properly entered since the period of delay of 156 days attributable to the delay in the issuance of the patent overlaps with the adjustment of 507 days attributable to grounds specified in § 1.702(a)(1). Entry of both periods is not warranted. 507 days is determined to be the actual number of days that the issuance of the patent was delayed, considering the 156 days over three years. Accordingly, at issuance, the Office properly entered 0 additional days of patent term adjustment specifically for the Office taking in excess of 3 years to issue the patent.

In view thereof, the Office affirms that the correct revised determination of patent term adjustment at the time of the issuance of the patent is 479 days. The patent properly issued with this indication contained thereon, and no further action is required.

CONCLUSION

The Office acknowledges submission of the $200.00 fee set forth in 37 CFR 1.18(e). No additional fees are required.

Telephone inquiries specific to this matter should be directed to Paul Shanoski, Senior Attorney, at (571) 272-3225.

Nancy Johnson
Senior Petitions Attorney
Office of Petitions

UNITED STATES PATENT AND TRADEMARK OFFICE

Commissioner for Patents
United States Patent and Trademark Office
P.O. Box 1450
Alexandria, VA 22313-1450
www.uspto.gov

TOWNSEND AND TOWNSEND AND CREW, LLP
TWO EMBARCADERO CENTER
EIGHTH FLOOR
SAN FRANCISCO, CA 94111-3834

COPY MAILED

AUG 29 2007

OFFICE OF PETITIONS

In re Application of	:	
THAVEEPRUNGSRIPORN, Visit et al.	:	
Application No. 11/142,508	:	DECISION ON PETITION
Filed: May 31, 2005	:	TO WITHDRAW
Attorney Docket No. **021612-002810US**	:	FROM RECORD
	:	

This is a decision on the Request to Withdraw as attorney or agent of record under 37 C.F.R. § 1.36(b), filed July 19, 2007.

The request is **NOT APPROVED** as moot.

A review of the file record indicates that the power of attorney to Townsend and Townsend and Crew, LLP has been revoked by the assignee of the patent application on July 30, 2007. Accordingly, the request to withdraw under 37 C.F.R. § 1.36(b) is moot.

All future communications from the Office will continue to be directed to the below-listed address until otherwise notified by applicant.

Telephone inquires concerning this decision should be directed to Michelle R. Eason at 571-272-4231.

T. Williams

Terri Williams
Petitions Examiner
Office of Petitions

cc: **INTELLECTUAL PROPERTY LAW OFFICE OF JOEL VOELZKE**
24772 SADDLE PEAK ROAD
MALIBU, CA 90265

UNITED STATES PATENT AND TRADEMARK OFFICE

Commissioner for Patents
United States Patent and Trademark Office
P.O. Box 1450
Alexandria, VA 22313-1450
www.uspto.gov

SQUIRE, SANDERS & DEMPSEY L.L.P
PATENT DEPARTMENT
ONE MARITIME PLAZA, SUITE 300
SAN FRANCISCO, CA 94111-3492

COPY MAILED

MAY 15 2009

OFFICE OF PETITIONS

In re Application of	:	
Zhiliang Zheng	:	DECISION ON PETITION
Application No. 11/142,510	:	TO WITHDRAW
Filed: May 31, 2005	:	FROM RECORD
Attorney Docket No. 58752-8005.US01	:	

This is a decision on the Request to Withdraw as attorney or agent of record under 37 C.F.R. § 1.36(b), filed August 29, 2005.

The request is **NOT APPROVED** because it is moot.

A review of the file record indicates that the power of attorney to practitioners associated with Squire, Sanders & Dempsey L.L.P, has been revoked by the applicant of the patent application on November 16, 2005. Accordingly, the request to withdraw under 37 C.F.R. § 1.36(b) is moot.

All future communications from the Office will continue to be directed to the below-listed address until otherwise notified by applicant.

Telephone inquires concerning this decision should be directed to the undersigned at 571-272-6059.

A. Kelley

Alicia Kelley
Petitions Examiner
Office of Petitions

cc: PERKINS COIE LLP
P.O. BOX 1208
SEATTLE, WA 98111-1208

UNITED STATES PATENT AND TRADEMARK OFFICE

Commissioner for Patents
United States Patent and Trademark Office
P.O. Box 1450
Alexandria, VA 22313-1450
www.uspto.gov

PERKINS COIE LLP
P.O. BOX 1208
SEATTLE, WA 98111-1208

MAILED

JUL 0 2 2009

OFFICE OF PETITIONS

In re Application of
Zhiliang Zheng
Application No. 11/142,510
Filed: May 31, 2005
Attorney Docket No. 58752-8005.US01

DECISION ON PETITION
TO WITHDRAW
FROM RECORD

This is a decision on the Request to Withdraw as attorney or agent of record under 37 C.F.R. § 1.36(b), filed April 16, 2009.

The request is **APPROVED**.

A grantable request to withdraw as attorney/agent of record must be signed by every attorney/agent seeking to withdraw or contain a clear indication that one attorney is signing on behalf of another/others. The Office will require the practitioner(s) to certify that he, she or they have: (1) given reasonable notice to the client, prior to the expiration of the reply period, which the practitioner(s) intends to withdraw from employment; (2) delivered to the client or a duly authorized representative of the client all papers and property (including funds) to which the client is entitled; and (3) notified the client of any replies that may be due and the time frame within which the client must respond, pursuant to 37 CFR 10.40 (c).

The request was signed by William F. Ahmann on behalf of all practitioners of record who are associated with Customer Number 22918.

All attorneys/agents associated with the Customer Number 22918 have been withdrawn. Applicant is reminded that there is no attorney of record at this time.

The correspondence address of record has been changed and the new correspondence address is the address indicated below.

There is an outstanding Non-Final Office action mailed March 23, 2009 that requires a reply from the applicant.

Telephone inquires concerning this decision should be directed to Alicia Kelley at (571) 272-6059. All other inquires concerning either the examination or status of the application should be directed to the Technology Center.

/Liana Walsh/
Liana Walsh
Petitions Examiner
Office of Petitions

cc: ZHILIANG ZHENG
P.O. BOX 60576
SUNNYVALE, CA 94088

UNITED STATES PATENT AND TRADEMARK OFFICE

UNITED STATES DEPARTMENT OF COMMERCE
United States Patent and Trademark Office
Address: COMMISSIONER FOR PATENTS
P.O. Box 1450
Alexandria, Virginia 22313-1450
www.uspto.gov

APPLICATION NUMBER	FILING OR 371(C) DATE	FIRST NAMED APPLICANT	ATTY. DOCKET NO./TITLE
11/142,510	05/31/2005	Zhiliang Zheng	

CONFIRMATION NO. 7694

POWER OF ATTORNEY NOTICE

22918
PERKINS COIE LLP
P.O. BOX 1208
SEATTLE, WA 98111-1208

OC000000036771716

Date Mailed: 07/02/2009

NOTICE REGARDING CHANGE OF POWER OF ATTORNEY

This is in response to the Power of Attorney filed 04/16/2009.

- The withdrawal as attorney in this application has been accepted. Future correspondence will be mailed to the new address of record. 37 CFR 1.33.

/atkelley/

Office of Data Management, Application Assistance Unit (571) 272-4000, or (571) 272-4200, or 1-888-786-0101

UNITED STATES PATENT AND TRADEMARK OFFICE

Commissioner for Patents
United States Patent and Trademark Office
P.O. Box 1450
Alexandria, VA 22313-1450
www.uspto.gov

PERKINS COIE LLP
P.O. BOX 1208
SEATTLE, WA 98111-1208

COPY MAILED

MAY 11 2009

OFFICE OF PETITIONS

In re Application of	:	
Zhuliang Zheng	:	
Application No. 11/142,516	:	DECISION ON PETITION
Filed: May 31, 2005	:	TO WITHDRAW
Attorney Docket No. 58752-8004.US01	:	FROM RECORD
	:	

This is a decision on the Request to Withdraw as attorney or agent of record under 37 C.F.R. § 1.36(b), filed April 16, 2009.

The request is **APPROVED**.

A grantable request to withdraw as attorney/agent of record must be signed by every attorney/agent seeking to withdraw or contain a clear indication that one attorney is signing on behalf of another/others.

The request was signed by William Ahmann on behalf of all attorneys of record who are associated with customer No. 22918. All attorneys/agents associated with the Customer Number 22918 have been withdrawn. Applicant is reminded that there is no attorney of record at this time.

The request to change the correspondence of record is not acceptable as the requested correspondence address is not that of: (1) the first named signing inventor; or (2) an intervening assignee of the entire interest under 37 C.F.R 3.71. All future communications from the Office will be directed to the first named signing inventor at the first copied address below until otherwise properly notified by the applicant.

In order to request or take action in a patent matter, the assignee must establish its ownership of the patent to the satisfaction of the Director. In this regard, a Statement under 37 CFR 3.73(b) must have either: (i) documentary evidence of a chain of title from the original owner to the assignee (*e.g.*, copy of an executed assignment), and a statement affirming that the documentary evidence of the chain of title from the original owner to the assignee was or concurrently is being submitted for recordation pursuant to § 3.11; or (ii) a statement specifying where documentary evidence of a chain of title from the original owner to the assignee is recorded in the assignment records of the Office (*e.g.*, reel and frame number).

There is an outstanding Office action mailed April 27, 2009 that requires a reply from the applicant.

Telephone inquiries concerning this decision should be directed to undersigned at 571-272-1642. All other inquiries concerning the examination or status of this application should be directed to the Technology Center.

/AMW/
April M. Wise
Petitions Examiner
Office of Petitions

cc: ZHILIANG ZHENG
PO BOX 60576
SUNNYVALE, CA 94088

cc: LYHOO, INC.
PO BOX 60576
SUNNY VALE, CA 94088

UNITED STATES PATENT AND TRADEMARK OFFICE

UNITED STATES DEPARTMENT OF COMMERCE
United States Patent and Trademark Office
Address: COMMISSIONER FOR PATENTS
P.O. Box 1450
Alexandria, Virginia 22313-1450
www.uspto.gov

APPLICATION NUMBER	FILING OR 371(C) DATE	FIRST NAMED APPLICANT	ATTY. DOCKET NO./TITLE
11/142,516	05/31/2005	Zhiliang Zheng	58752-8004.US01

CONFIRMATION NO. 7693

POWER OF ATTORNEY NOTICE

22918
PERKINS COIE LLP
P.O. BOX 1208
SEATTLE, WA 98111-1208

OC000000035764645

Date Mailed: 05/01/2009

NOTICE REGARDING CHANGE OF POWER OF ATTORNEY

This is in response to the Power of Attorney filed 04/16/2009.

- The withdrawal as attorney in this application has been accepted. Future correspondence will be mailed to the new address of record. 37 CFR 1.33.

/amwise/

Office of Data Management, Application Assistance Unit (571) 272-4000, or (571) 272-4200, or 1-888-786-0101

UNITED STATES PATENT AND TRADEMARK OFFICE

Commissioner for Patents
United States Patent and Trademark Office
P.O. Box 1450
Alexandria, VA 22313-1450
www.uspto.gov

SQUIRE, SANDERS & DEMPSEY L.L.P
PATENT DEPARTMENT
ONE MARITIME PLAZA, SUITE 300
SAN FRANCISCO, CA 94111-3492

COPY MAILED

MAY 11 2009

OFFICE OF PETITIONS

In re Application of	:	
Zhiliang Zheng	:	
Application No. 11/142,516	:	DECISION ON PETITION
Filed: May 31, 2005	:	TO WITHDRAW
Attorney Docket No. 65623.00002	:	FROM RECORD
	:	

This is a decision on the Request to Withdraw as attorney or agent of record under 37 C.F.R. § 1.36(b), filed August 29, 2005.

The request is **DISMISSED** as moot.

A review of the file record indicates that the power of attorney to Squire, Sanders & Dempsey, LLP has been revoked by the applicant of the patent application on November 16, 2005. Accordingly, the request to withdraw under 37 C.F.R. § 1.36(b) is moot.

All future communications from the Office will continue to be directed to the below-listed address until otherwise notified by applicant.

Telephone inquires concerning this decision should be directed to undersigned at 571-272- 1642. All other inquiries concerning the examination or status of this application should be directed to the Technology Center.

/AMW/
April M. Wise
Petitions Examiner
Office of Petitions

cc: WILLIAM F. AHMANN
PERKINS, COIE, LLP
101 JEFFERSON DRIVE
MENLO PARK, CA 94025

UNITED STATES PATENT AND TRADEMARK OFFICE

Commissioner for Patents
United States Patent and Trademark Office
P.O. Box 1450
Alexandria, VA 22313-1450
www.uspto.gov

JOSEPH CAGNO
SUITE B-5
215 CLAY STREET NW
AUBURN, WA 98001

COPY MAILED
APR 13 2006
OFFICE OF PETITIONS

In re Application of	:	
Clyde T. Carpenter	:	
Application No. 11/142,522	:	DECISION ON PETITION
Filed: June 1, 2005	:	TO MAKE SPECIAL UNDER
Attorney Docket No. 10.001	:	37 CFR 1.102(d)
	:	

This is a decision on the petition under 37 CFR § 1.102(d), filed March 6, 2006, to make the above-identified application special based on applicants who are small entities filing biotechnology applications as set forth in M.P.E.P. § 708.02, Section XII.

The petition is **DISMISSED**.

A grantable petition to make an application special under 37 CFR § 1.102(d) and MPEP § 708.02, Section XII: Special Status for Applications Relating to Biotechnology Filed by Applicants Who are Small Entities, must be accompanied by (1) the petition fee under 37 CFR 1.17(h); and (2) state:

> (A) That small entity status has been established or include a statement establishing small entity status;
>
> (B) That the subject of the patent application is a major asset of the small entity; and
>
> (c) That the development of the technology will be significantly impaired if examination of the patent application is delayed, including an explanation of the basis for making the statement.

To be granted special status, the application must be related to the field of Biotechnology.

The instant petition fails to meet the requirements set forth for the special status because it is not a biotechnical invention. Biotechnology is the industrial use of recombinant DNA, cell diffusion and novel bioprocessing techniques.

Further correspondence with respect to this matter should be addressed as follows:

By Mail: Mail Stop PETITION
Commissioner for Patents
P. O. Box 1450
Alexandria, VA 22313-1450

By hand: U. S. Patent and Trademark Office
Customer Service Window, Mail Stop Petitions
Randolph Building
401 Dulany Street
Alexandria, VA 22314

By FAX: (571) 273-8300

Telephone inquires concerning this decision should be directed to Wan Laymon at 571-272-3220.

All other inquiries concerning either the examination or status of the application should be directed to the Technology Center.

This application is being referred to Technology Center AU 3738 for action in its regular turn.

Amelia Au
Petitions Examiner
Office of Petitions

UNITED STATES PATENT AND TRADEMARK OFFICE

Commissioner for Patents
United States Patent and Trademark Office
P.O. Box 1450
Alexandria, VA 22313-1450
www.uspto.gov

PACIFIC INTELLECTUAL PROPERTY ASSOCIATES
P.O. BOX 28542
SEATTLE WA 98118

SEP 10 2007

In re Application of: CARPENTER Serial No.: 11/142,522 Filed: June 1, 2005 Title: ANATOMIC TOTAL DISC REPLACEMENT	:	DECISION ON PETITION TO MAKE SPECIAL FOR NEW APPLICATION UNDER 37 C.F.R. § 1.102 & M.P.E.P. § 708.02

This is a decision on the petition filed on August 29, 2006 to make the above-identified application special for accelerated examination procedure under 37 C.F.R. § 1.102(d).

The petition to make the application special is **DENIED**.

REGULATION AND PRACTICE

To be eligible for accelerated examination under 37 C.F.R. § 1.102(d) and pursuant to the "Change to Practice for Petitions in Patent Applications to Make Special and for Accelerated Examination" published in the Federal Register on June 26, 2006 (71 Fed. Reg. 36323), the following conditions must be satisfied:

1. The application must be a non-reissue utility or design application filed under 37 CFR 1.111(a);
2. The application, the petition and the required fees must be filed electronically using the USPTO's electronic filing system (EFS), or EFS-web; if not filed electronically, a statement asserting that EFS and EFS-web were not available during the normal business hours;
3. The application, at the time of filing, must be complete under 37 CFR 1.51 and in condition for examination;
4. The application must contain three or fewer independent claims and twenty or fewer total claims and the claims must be directed to a single invention.
5. The petition must be filed with the application.

The application as filed is not eligible for the accelerated examination under 37 C.F.R. § 1.102(d) because the petition was not filed with the application. As noted in the policy statement referenced above, any petition to make special filed on or after the effective date must meet the new requirements set forth in the 71 Fed. Reg. 36323 notice. Applications filed before

the effective date will not be eligible for the revised accelerated examination program. The effective date of the change in practice was August 25, 2006. Thus the instant petition must be reviewed under the revised practice and the instant application is ineligible.

The petition appears on its face to have been filed without recognition of the August 25, 2006 policy change to the petition to make special program. The changes to the program are substantial. A copy of Federal Register on June 26, 2006 (71 Fed. Reg. 36323) is being attached to the mailed decision for petitioner's review. Further guidance may be found at www.USPTO.gov under the accelerated examination link.

The petition also appears moot as presently application is undergoing examination.

For the above-stated reasons, the petition is **DENIED**. The application will therefore be taken up by the examiner for action in its regular turn.

Any inquiry regarding this decision should be directed to J. Harrison, TC 3700 Special Program Examiner, at (571) 272-4449.

J. Harrison
Special Program Examiner
Technology Center 3700

UNITED STATES PATENT AND TRADEMARK OFFICE

Commissioner for Patents
United States Patent and Trademark Office
P.O. Box 1450
Alexandria, VA 22313-1450
www.uspto.gov
DNW Jun-09

CHERNOFF, VILHAUER, MCCLUNG & STENZEL, LLP
601 SW Second Avenue
Suite 1600
PORTLAND OR 97204-3157

COPY MAILED

JUL 01 2009

OFFICE OF PETITIONS

In re Application of	:	
Clyde T. Carpenter	:	
Application Number: 11/142522	:	ON PETITION
Filing Date: 06/01/2005	:	
Attorney Docket Number:	:	
DBH:9209.0002	:	

This is a decision on the petition under 37 CFR 1.137(b)[1] filed on April 30, 2009, to revive the above-identified application.

The petition is **GRANTED**.

This application became abandoned on March 1, 2008, for failure to timely submit a response to the final Office action mailed on November 29, 2007, which set a three (3) month shortened statutory period for reply. No extensions of the time for reply in accordance with 37 CFR 1.136(a) were obtained. Notice of Abandonment was mailed on June 20, 2008.

---

[1] Effective December 1, 1997, the provisions of 37 CFR 1.137(b) now provide that where the delay in reply was unintentional, a petition may be filed to revive an abandoned application or a lapsed patent pursuant to 37 CFR 1.137(b). A grantable petition filed under the provisions of 37 CFR 1.137(b) must be accompanied by:

(1) the required reply, unless previously filed. In a nonprovisional application abandoned for failure to prosecute, the required reply may be met by the filing of a continuing application. In a nonprovisional application filed on or after June 8, 1995, and abandoned for failure to prosecute, the required reply may also be met by the filing of a request for continued examination in compliance with § 1.114. In an application or patent, abandoned or lapsed for failure to pay the issue fee or any portion thereof, the required reply must be the payment of the issue fee or any outstanding balance thereof. In an application abandoned for failure to pay the publication fee, the required reply must include payment of the publication fee.

(2) the petition fee as set forth in 37 CFR 1.17(m);

(3) a statement that the entire delay in filing the required reply from the due date for the reply until the filing of a grantable petition pursuant to 37 CFR 1.137(b) was unintentional. The Director may required additional information where there is a question whether the delay was unintentional; and

(4) any terminal disclaimer (and fee as set forth in 37 CFR 1.20(d)) required pursuant to 37 CFR 1.137(c)).

Petitioner has filed a Request for Continued Examination (RCE), and an amendment as the submission required under 37 CFR 1.114.

This application is being referred to Technology Center Art Unit 3733 for further processing.

Telephone inquiries concerning this matter may be directed to the undersigned at (571)272-3231.

D Wood

Douglas I. Wood
Senior Petitions Attorney
Office of Petitions

UNITED STATES PATENT AND TRADEMARK OFFICE

UNITED STATES DEPARTMENT OF COMMERCE
United States Patent and Trademark Office
Address: COMMISSIONER FOR PATENTS
P.O. Box 1450
Alexandria, Virginia 22313-1450
www.uspto.gov

MILLIPORE CORPORATION
290 CONCORD ROAD
BILLERICA, MA 01821

Mail Date: 04/21/2010

Applicant	: Richard T. Burnham	: DECISION ON REQUEST FOR
Patent Number	: 7618592	: RECALCULATION of PATENT
Issue Date	: 11/17/2009	: TERM ADJUSTMENT IN VIEW
Appliction No	: 11/142,542	: OF WYETH AND NOTICE OF INTENT TO
Filed	: 06/01/2005	: ISSUE CERTIFICATE OF CORRECTION
		:

The Request for Recalculation is **GRANTED** to the extent indicated.

The patent term adjustment has been determined to be **1071** days. The USPTO will *sua sponte* issue a certificate of correction reflecting the amount of PTA days determined by the recalculation.

Prior to the issuance of the certificate of correction, the USPTO will afford patentee an opportunity to be heard and request reconsideration. Accordingly, patentee has **one month or thirty (30) days**, whichever is longer, to file a request for reconsideration of this patent term adjustment calculation. See 35 U.S.C. 154(b)(3)(B)(ii) and 37 CFR 1.322(a)(4). No extensions of time will be granted under 37 CFR 1.136.

Patentee should use document code PET.OP if electronically filing a request for reconsideration of this patent term adjustment calculation. The patentee must also include the information required by 37 CFR 1.705(b)(2) and the fee required by 37 CFR 1.18(e). If patentee does not file a timely request for reconsideration of this patent term adjustment calculation including the information required by 37 CFR 1.705(b)(2) and the fee required by 37 CFR 1.18(e), the USPTO will issue a certificate of correction reflecting the PTA determination noted above.

Patentee should be aware that in order to preserve the right to review in the United States District Court for the District of Columbia of the USPTO patent term adjustment determination, patentee must ensure that he or she also take the steps required under 35 U.S.C. 154(b)(4)(A) in a timely manner. Nothing in the request for recalculation should be construed as providing an alternative time frame for commencing a civil action under 35 U.S.C. 154(b)(4)(A).

Any questions concerning this decision should be directed to the Office of Patent Legal Administration at 571-272-7702.

UNITED STATES PATENT AND TRADEMARK OFFICE

UNITED STATES DEPARTMENT OF COMMERCE
United States Patent and Trademark Office
Address: COMMISSIONER FOR PATENTS
P.O. Box 1450
Alexandria, Virginia 22313-1450
www.uspto.gov

WADDEY & PATTERSON, P.C.
1600 DIVISION STREET, SUITE 500
NASHVILLE, TN 37203

Mail Date: 04/20/2010

Applicant	: Nagendra Rangavajla	: DECISION ON REQUEST FOR
Patent Number	: 7618669	: RECALCULATION of PATENT
Issue Date	: 11/17/2009	: TERM ADJUSTMENT IN VIEW
Appliction No	: 11/142,544	: OF WYETH AND NOTICE OF INTENT TO
Filed	: 06/01/2005	: ISSUE CERTIFICATE OF CORRECTION
		:

The Request for Recalculation is **GRANTED** to the extent indicated.

The patent term adjustment has been determined to be **1038** days. The USPTO will *sua sponte* issue a certificate of correction reflecting the amount of PTA days determined by the recalculation.

Prior to the issuance of the certificate of correction, the USPTO will afford patentee an opportunity to be heard and request reconsideration. Accordingly, patentee has **one month or thirty (30) days**, whichever is longer, to file a request for reconsideration of this patent term adjustment calculation. See 35 U.S.C. 154(b)(3)(B)(ii) and 37 CFR 1.322(a)(4). No extensions of time will be granted under 37 CFR 1.136.

Patentee should use document code PET.OP if electronically filing a request for reconsideration of this patent term adjustment calculation. The patentee must also include the information required by 37 CFR 1.705(b)(2) and the fee required by 37 CFR 1.18(e). If patentee does not file a timely request for reconsideration of this patent term adjustment calculation including the information required by 37 CFR 1.705(b)(2) and the fee required by 37 CFR 1.18(e), the USPTO will issue a certificate of correction reflecting the PTA determination noted above.

Patentee should be aware that in order to preserve the right to review in the United States District Court for the District of Columbia of the USPTO patent term adjustment determination, patentee must ensure that he or she also take the steps required under 35 U.S.C. 154(b)(4)(A) in a timely manner. Nothing in the request for recalculation should be construed as providing an alternative time frame for commencing a civil action under 35 U.S.C. 154(b)(4)(A).

Any questions concerning this decision should be directed to the Office of Patent Legal Administration at 571-272-7702.

UNITED STATES PATENT AND TRADEMARK OFFICE

Commissioner for Patents
United States Patent and Trademark Office
P.O. Box 1450
Alexandria, VA 22313-1450
www.uspto.gov

NORMAN P. SOLOWAY
HAYES SOLOWAY P.C.
3450 E. SUNRISE DRIVE, SUITE 140
TUCSON AZ 85718

MAILED

MAY 07 2009

OFFICE OF PETITIONS

In re Application of	:	
PUTNAM, Everly D.	:	
Application No. 11/142,554	:	DECISION ON PETITION
Filed: June 01, 2005	:	TO WITHDRAW
Attorney Docket No. **MEDUSA 07.09**	:	FROM RECORD
	:	

This is a decision on the Request to Withdraw as attorney or agent of record under 37 C.F.R. § 1.36(b), filed April 10, 2009.

The request is **APPROVED**.

A grantable request to withdraw as attorney/agent of record must be signed by every attorney/agent seeking to withdraw or contain a clear indication that one attorney is signing on behalf of another/others. The Office requires the practitioner(s) requesting withdrawal to certify that he, she, or they have: (1) given reasonable notice to the client, prior to the expiration of the response period, that the practitioner(s) intends to withdraw from employment; (2) delivered to the client or a duly authorized representative of the client all papers and property (including funds) to which the client is entitled; and (3) notified the client of any responses that may be due and the time frame within which the client must respond, pursuant 37 CFR 10.40(c).

The request was signed by Norman Soloway on behalf of all attorneys of record who are associated. All attorneys/agents associated have been withdrawn. Applicant is reminded that there is no attorney of record at this time.

The request to change the correspondence address of record is not acceptable as the requested correspondence address is not that of: (1) the first named signing inventor; or (2) an intervening assignee of the entire interest under 37 C.F.R 3.71. All future communications from the Office will be directed to the first named signing inventor at the first copied address below until otherwise properly notified by the applicant.

There is an outstanding Office action mailed April 02, 2009 that requires a reply from the applicant.

Telephone inquiries concerning this decision should be directed to Tredelle Jackson at 571-272-2783.

Tredelle D. Jackson
Paralegal Specialist
Office of Petitions

cc: **EVERLY D. PUTNAM**
4385 S.E. 16TH STREET
DES MOINES IA 50320

cc: **MEDUSA SPECIAL PROJECTS, LLC**
9121 E. TANQUE VERDE ROAD
SUITE 105-419
TUCSON AZ 85749

UNITED STATES PATENT AND TRADEMARK OFFICE

OFFICE

SERIAL NUMBER	FILING DATE	FIRST NAMED APPLICANT	ATTORNEY DOCKET NO.
11/142588	06/01/05	HARWATH-SEYFRIED, WOLFGANG	2133.092USU

Charles N.J.Ruggiero, ESQ.
Ohlandt, Greley, Ruggiero & Perle, L.L.P.
10th Floor
One Landmark Square
Stamford CT 06901-2682

EXAMINER	
OJINI, ANTHONY	
ART UNIT	PAPER NUMBER
3723	

DATE MAILED: 1/31/07

NOTICE OF RESCINDED ABANDONMENT

☐ **In response to your communication filed _____**

☒ **Through inadvertence, a Notice of Abandonment was mailed in the above-identified application. The Notice of Abandonment is hereby rescinded.**

For Manager, Publications Division
Office of Patent Publication
571-272-4200

UNITED STATES PATENT AND TRADEMARK OFFICE

UNITED STATES DEPARTMENT OF COMMERCE
United States Patent and Trademark Office
Address: COMMISSIONER FOR PATENTS
P.O. Box 1450
Alexandria, Virginia 22313-1450
www.uspto.gov

YAMAHA
C/O KEATING & BENNETT, LLP
1800 Alexander Bell Drive
SUITE 200
Reston, VA 20191

Mail Date: 04/20/2010

Applicant	: Takashi Yamamura	: DECISION ON REQUEST FOR
Patent Number	: 7665770	: RECALCULATION of PATENT
Issue Date	: 02/23/2010	: TERM ADJUSTMENT IN VIEW
Appliction No	: 11/142,597	: OF WYETH AND NOTICE OF INTENT TO
Filed	: 06/01/2005	: ISSUE CERTIFICATE OF CORRECTION
		:

The Request for Recalculation is **GRANTED** to the extent indicated.

The patent term adjustment has been determined to be **202** days. The USPTO will *sua sponte* issue a certificate of correction reflecting the amount of PTA days determined by the recalculation.

Prior to the issuance of the certificate of correction, the USPTO will afford patentee an opportunity to be heard and request reconsideration. Accordingly, patentee has **one month or thirty (30) days**, whichever is longer, to file a request for reconsideration of this patent term adjustment calculation. See 35 U.S.C. 154(b)(3)(B)(ii) and 37 CFR 1.322(a)(4). No extensions of time will be granted under 37 CFR 1.136.

Patentee should use document code PET.OP if electronically filing a request for reconsideration of this patent term adjustment calculation. The patentee must also include the information required by 37 CFR 1.705(b)(2) and the fee required by 37 CFR 1.18(e). If patentee does not file a timely request for reconsideration of this patent term adjustment calculation including the information required by 37 CFR 1.705(b)(2) and the fee required by 37 CFR 1.18(e), the USPTO will issue a certificate of correction reflecting the PTA determination noted above.

Patentee should be aware that in order to preserve the right to review in the United States District Court for the District of Columbia of the USPTO patent term adjustment determination, patentee must ensure that he or she also take the steps required under 35 U.S.C. 154(b)(4)(A) in a timely manner. Nothing in the request for recalculation should be construed as providing an alternative time frame for commencing a civil action under 35 U.S.C. 154(b)(4)(A).

Any questions concerning this decision should be directed to the Office of Patent Legal Administration at 571-272-7702.

UNITED STATES PATENT AND TRADEMARK OFFICE

Commissioner for Patents
United States Patent and Trademark Office
P.O. Box 1450
Alexandria, VA 22313-1450
www.uspto.gov

MEREK, BLACKMON & VOORHEES, LLC
673 S. WASHINGTON ST
ALEXANDRIA, VA 22314

MAILED

JUN 15 2010

OFFICE OF PETITIONS

In re Application of
Murray S. GERTNER
Application No. 11/142,599
Filed: June 1, 2005
Attorney Docket No. **MSGA 3.0-001**

DECISION ON PETITION TO MAKE SPECIAL UNDER 37 CFR 1.102(c)(1)

This is a decision on the petition under 37 CFR 1.102(c)(1), filed May 20, 2010, to make the above-identified application special based on applicant's age as set forth in M.P.E.P. § 708.02, Section IV.

The petition is **GRANTED**.

A grantable petition to make an application special under 37 CFR 1.102(c)(1) and MPEP § 708.02, Section IV: Applicant's Age must be accompanied by evidence showing that at least one of the applicants is 65 years of age, or more, such as a birth certificate or a statement by applicant. No fee is required

The instant petition includes the certification of attorney John P. Shannon attesting to the age of inventor Murray S. Gertner. Accordingly, the above-identified application has been accorded "special" status.

Inquiries concerning either the examination or status of the application should be directed to the Technology Center at 571-272-3600.

Telephone inquiries concerning this decision should be directed to the undersigned at 571-272-7253.

The application is being forwarded to Technology Center Art Unit 3671 for action on the merits commensurate with this decision.

/Monica A. Graves/
Petitions Examiner, Office of Petitions

UNITED STATES PATENT AND TRADEMARK OFFICE

Commissioner for Patents
United States Patent and Trademark Office
P.O. Box 1450
Alexandria, VA 22313-1450
www.uspto.gov

SQUIRE, SANDERS & DEMPSEY L.L.P
PATENT DEPARTMENT
ONE MARITIME PLAZA, SUITE 300
SAN FRANCISCO, CA 94111-3492

MAILED

MAY 18 2009

OFFICE OF PETITIONS

In re Application of	:	
Zhiliang Zheng	:	DECISION ON PETITION
Application No. 11/142,634	:	TO WITHDRAW
Filed: May 31, 2005	:	FROM RECORD
Attorney Docket No. 65623.00006	:	

This is a decision on the Request to Withdraw as attorney or agent of record under 37 C.F.R. § 1.36(b), filed August 29, 2005.

The request is **NOT APPROVED** because it is moot.

A review of the file record indicates that the power of attorney to practitioners associated with Squire, Sanders & Dempsey L.L.P, has been revoked by the applicant of the patent application on November 16, 2005. Accordingly, the request to withdraw under 37 C.F.R. § 1.36(b) is moot.

All future communications from the Office will continue to be directed to the below-listed address until otherwise notified by applicant.

Telephone inquires concerning this decision should be directed to the undersigned at 571-272-6059.

A. Kelley

Alicia Kelley
Petitions Examiner
Office of Petitions

cc: PERKINS COIE LLP
P.O. BOX 1208
SEATTLE, WA 98111-1208

UNITED STATES PATENT AND TRADEMARK OFFICE

Commissioner for Patents
United States Patent and Trademark Office
P.O. Box 1450
Alexandria, VA 22313-1450
www.uspto.gov

PERKINS COIE LLP
P.O. BOX 1208
SEATTLE, WA 98111-1208

COPY MAILED

DEC 2 2 2009

OFFICE OF PETITIONS

In re Application of	:	
Zhiliang Zheng	:	DECISION ON PETITION
Application No. 11/142,634	:	TO WITHDRAW
Filed: May 31, 2005	:	FROM RECORD
Attorney Docket 58752-8007.US01	:	

This is a decision on the Request to Withdraw as attorney or agent of record under 37 C.F.R. § 1.36(b), filed October 23, 2009.

The request is **APPROVED**.

A grantable request to withdraw as attorney/agent of record must be signed by every attorney/agent seeking to withdraw or contain a clear indication that one attorney is signing on behalf of another/others. The Office will require the practitioner(s) to certify that he, she or they have: (1) given reasonable notice to the client, prior to the expiration of the reply period, which the practitioner(s) intends to withdraw from employment; (2) delivered to the client or a duly authorized representative of the client all papers and property (including funds) to which the client is entitled; and (3) notified the client of any replies that may be due and the time frame within which the client must respond, pursuant to 37 CFR 10.40 (c).

The request was signed by William Ahmann, on behalf of all practitioners of record who are associated with Customer Number 22918.

All attorneys/agents associated with the Customer Number 22918 have been withdrawn. Applicant is reminded that there is no attorney of record at this time.

The correspondence address of record has been changed and the new correspondence address is the address indicated below.

There are no outstanding Office actions that require a reply from the applicant.

Telephone inquires concerning this decision should be directed to the undersigned at (571) 272-6059. All other inquires concerning either the examination or status of the application should be directed to the Technology Center.

A. Kelley

Alicia Kelley
Petitions Examiner
Office of Petitions

cc: ZHILIANG ZHENG
P.O. BOX 60576
SUNNYVALE, CA 94088

UNITED STATES PATENT AND TRADEMARK OFFICE

UNITED STATES DEPARTMENT OF COMMERCE
United States Patent and Trademark Office
Address: COMMISSIONER FOR PATENTS
P.O. Box 1450
Alexandria, Virginia 22313-1450
www.uspto.gov

APPLICATION NUMBER	FILING OR 371(C) DATE	FIRST NAMED APPLICANT	ATTY. DOCKET NO./TITLE
11/142,634	05/31/2005	Zhiliang Zheng	

CONFIRMATION NO. 7846

POWER OF ATTORNEY NOTICE

22918
PERKINS COIE LLP
P.O. BOX 1208
SEATTLE, WA 98111-1208

OC000000039308184

Date Mailed: 12/18/2009

NOTICE REGARDING CHANGE OF POWER OF ATTORNEY

This is in response to the Power of Attorney filed 10/23/2009.

- The withdrawal as attorney in this application has been accepted. Future correspondence will be mailed to the new address of record. 37 CFR 1.33.

/atkelley/

Office of Data Management, Application Assistance Unit (571) 272-4000, or (571) 272-4200, or 1-888-786-0101

UNITED STATES PATENT AND TRADEMARK OFFICE

COMMISSIONER FOR PATENTS
UNITED STATES PATENT AND TRADEMARK OFFICE
P.O. BOX 1450
ALEXANDRIA, VA 22313-1450
www.uspto.gov

Paper No.

KRATZ, QUINTOS & HANSON, LLP
1420 K Street, N.W.
Suite 400
WASHINGTON DC 20005

COPY MAILED
AUG 1 1 2008

In re Application of :
Nakamura et al. : DECISION ON PETITION
Application No. 11/142,660 :
Filed: June 2, 2005 :
Attorney Docket No. 050351 :

This is a decision on the "REQUEST TO WITHDRAW NOTICE OF ABANDONMENT DATED JANUARY 4, 2008" filed February 1, 2008.

The petition under 37 CFR § 1.181 is **DISMISSED**.

Any request for reconsideration pursuant to § 1.181 must be filed within **TWO (2) MONTHS** of the date of this decision in order to be considered timely. See 37 CFR §1.181(f). No extensions of time are permitted.

The above-identified application became abandoned for failure to timely file corrected drawings as required by, and within the three-month period set in, the Notice of Allowability mailed August 27, 2007. No extension of time under the provisions of 37 CFR 1.136 is permitted for filing corrected drawings. No reply having been received, the above-identified application became abandoned on November 28, 2007. A courtesy Notice of Abandonment was mailed on January 4, 2008.

In response, applicants filed the instant petition. Applicants argue that as explained to Examiner H.C. Kim in a telephone conference between the Examiner and the applicants' undersigned representative (conducted on or about January 16, 2008), no corrected drawings had to be filed in this case. In effect, applicants argue that as the drawings as filed in this

application show every feature of the claimed invention; and thus, no claims had to be cancelled and no drawing corrections had to be made.

The facts and circumstances of the abandonment have been considered, and it has been determined that withdrawal of the abandonment is not warranted. 35 U.S.C. 133 provides that:

> Upon failure of the applicant to prosecute the application within six months after any action therein, of which notice has been given or mailed to the applicant, or within such shorter time, not less than thirty days, as fixed by the Director in such action, the application shall be regarded as abandoned by the parties thereto, unless it be shown to the satisfaction of the Director that such delay was unavoidable.
>
> (Amended Nov. 29, 1999, Public Law 106-113, sec. 1000(a)(9), 113 Stat. 1501A-582 (S. 1948 sec. 4732(a)(10)(A)).)

Accordingly, to prevent abandonment of an application, an applicant must take action to further prosecution within the time period set forth in any notice they receive from the Office. It is undisputed that the Notice of Allowability mailed August 27, 2007 required applicants to file corrected drawings within 3 months. Further, it is undisputed that applicants received the Notice of Allowability mailed August 27, 2007, but did not file a response to the Notice. Applicants did not file corrected drawings or even a written objection and request for withdrawal of the requirement. Rather, applicants allowed the period for response to expire without action. Thus, upon expiration of the period for reply, the application became abandoned by operation of law.

The examiner has no authority to act upon an application in which no action by applicant was taken during the period for reply. In this instance, applicants' referenced conversation with the examiner regarding the propriety of the requirement for corrected drawings did not occur until January 14, 2008, about 5 months after the mailing of the Notice and almost 2 months after the abandonment of the application. Thus, such belated action is ineffective to prevent abandonment or to cause the abandonment to be rescinded. (It is further noted that any such

request should have been timely made *in writing*. See 37 CFR 1.2)[1].

It is concluded that the application is properly regarded as abandoned and withdrawal of the abandonment is not warranted.

Applicants are not precluded from submitting a petition to revive pursuant to 37 CFR 1.137.

Further correspondence with respect to this decision should be addressed as follows:

By mail:	Mail Stop Petition Commissioner for Patents P.O. Box 1450 Alexandria, VA 22313-1450
By fax:	(571) 273-8300 ATTN: Office of Petitions
By hand:	Customer Service Window Randolph Building 401 Dulany Street Alexandria, VA 22314

Telephone inquiries concerning this decision should be directed to the undersigned at (571) 272-3219.

Nancy Johnson
Senior Petitions Attorney
Office of Petitions

---

[1] This decision is not meant to infer that in all instances filing a written objection to an Office action will prevent abandonment of the application (i.e. petitions under 1.181 do not toll periods for reply). To ensure that an application does not become abandoned, a sufficient reply for the particular Office action must be filed.

UNITED STATES PATENT AND TRADEMARK OFFICE

Commissioner for Patents
United States Patent and Trademark Office
P.O. Box 1450
Alexandria, VA 22313-1450
www.uspto.gov

Paper No.

KRATZ, QUINTOS & HANSON, LLP
1420 K Street, N.W.
Suite 400
WASHINGTON DC 20005

COPY MAILED
NOV 26 2008

In re Application of	:	
Nakamura et al.	:	DECISION ON PETITION
Application No. 11/142,660	:	
Filed: June 2, 2005	:	
Attorney Docket No. 050351	:	

This is a decision on the PETITION TO REVIVE UNDER 37 C.F.R. §1.137(b) IN RESPONSE TO DECISION ON PETITION DATED AUGUST 11, 2008, filed August 27, 2008.

The petition is **GRANTED**.

The above-identified application became abandoned effective November 28, 2007 for failure to timely file corrected drawings as required by, and within the three-month period set in, the Notice of Allowability mailed August 27, 2007. A courtesy Notice of Abandonment was mailed on January 4, 2008. By decision mailed August 11, 2008, a prior "REQUEST TO WITHDRAW NOTICE OF ABANDONMENT DATED JANUARY 4, 2008" filed February 1, 2008 was dismissed.

In response, applicants filed the instant petition. The petition includes the required reply[1] in the form of a response to the drawing objection set forth in the Notice of Allowability; payment of the petition fee set forth in 37 CFR § 1.17(m); and the required statement of unintentional delay. No terminal disclaimer is required.

[1] The Issue Fee and Publication Fee were timely paid on November 27, 2007.

The Office of Data Management has been advised of this decision. The application is, thereby, forwarded for processing into a patent.

Telephone inquiries related to this decision should be directed to the undersigned at (571) 272-3219.

Nancy Johnson
Senior Petitions Attorney
Office of Petitions

UNITED STATES PATENT AND TRADEMARK OFFICE

UNITED STATES DEPARTMENT OF COMMERCE
United States Patent and Trademark Office
Address: COMMISSIONER FOR PATENTS
P.O. Box 1450
Alexandria, Virginia 22313-1450
www.uspto.gov

BANNER & WITCOFF, LTD.
1100 13th STREET, N.W.
SUITE 1200
WASHINGTON, DC 20005-4051

Mail Date: 04/21/2010

Applicant	: Kurt Joseph Stockbridge	: DECISION ON REQUEST FOR
Patent Number	: 7634831	: RECALCULATION of PATENT
Issue Date	: 12/22/2009	: TERM ADJUSTMENT IN VIEW
Appliction No	: 11/142,674	: OF WYETH AND NOTICE OF INTENT TO
Filed	: 06/02/2005	: ISSUE CERTIFICATE OF CORRECTION
		:

The Request for Recalculation is **GRANTED** to the extent indicated.

The patent term adjustment has been determined to be **886** days. The USPTO will *sua sponte* issue a certificate of correction reflecting the amount of PTA days determined by the recalculation.

Prior to the issuance of the certificate of correction, the USPTO will afford patentee an opportunity to be heard and request reconsideration. Accordingly, patentee has **one month or thirty (30) days**, whichever is longer, to file a request for reconsideration of this patent term adjustment calculation. See 35 U.S.C. 154(b)(3)(B)(ii) and 37 CFR 1.322(a)(4). No extensions of time will be granted under 37 CFR 1.136.

Patentee should use document code PET.OP if electronically filing a request for reconsideration of this patent term adjustment calculation. The patentee must also include the information required by 37 CFR 1.705(b)(2) and the fee required by 37 CFR 1.18(e). If patentee does not file a timely request for reconsideration of this patent term adjustment calculation including the information required by 37 CFR 1.705(b)(2) and the fee required by 37 CFR 1.18(e), the USPTO will issue a certificate of correction reflecting the PTA determination noted above.

Patentee should be aware that in order to preserve the right to review in the United States District Court for the District of Columbia of the USPTO patent term adjustment determination, patentee must ensure that he or she also take the steps required under 35 U.S.C. 154(b)(4)(A) in a timely manner. Nothing in the request for recalculation should be construed as providing an alternative time frame for commencing a civil action under 35 U.S.C. 154(b)(4)(A).

Any questions concerning this decision should be directed to the Office of Patent Legal Administration at 571-272-7702.

UNITED STATES PATENT AND TRADEMARK OFFICE

UNITED STATES DEPARTMENT OF COMMERCE
United States Patent and Trademark Office
Address: COMMISSIONER FOR PATENTS
P.O. Box 1450
Alexandria, Virginia 22313-1450
www.uspto.gov

MICHAEL TOBIAS
1629 K ST NW
SUITE 300
WASHINGTON, DC 20006

Mail Date: 04/21/2010

Applicant	: Norichika Yamauchi	: DECISION ON REQUEST FOR
Patent Number	: 7632329	: RECALCULATION of PATENT
Issue Date	: 12/15/2009	: TERM ADJUSTMENT IN VIEW
Appliction No	: 11/142,679	: OF WYETH AND NOTICE OF INTENT TO
Filed	: 06/02/2005	: ISSUE CERTIFICATE OF CORRECTION
		:

The Request for Recalculation is **GRANTED** to the extent indicated.

The patent term adjustment has been determined to be **926** days. The USPTO will *sua sponte* issue a certificate of correction reflecting the amount of PTA days determined by the recalculation.

Prior to the issuance of the certificate of correction, the USPTO will afford patentee an opportunity to be heard and request reconsideration. Accordingly, patentee has **one month or thirty (30) days**, whichever is longer, to file a request for reconsideration of this patent term adjustment calculation. See 35 U.S.C. 154(b)(3)(B)(ii) and 37 CFR 1.322(a)(4). No extensions of time will be granted under 37 CFR 1.136.

Patentee should use document code PET.OP if electronically filing a request for reconsideration of this patent term adjustment calculation. The patentee must also include the information required by 37 CFR 1.705(b)(2) and the fee required by 37 CFR 1.18(e). If patentee does not file a timely request for reconsideration of this patent term adjustment calculation including the information required by 37 CFR 1.705(b)(2) and the fee required by 37 CFR 1.18(e), the USPTO will issue a certificate of correction reflecting the PTA determination noted above.

Patentee should be aware that in order to preserve the right to review in the United States District Court for the District of Columbia of the USPTO patent term adjustment determination, patentee must ensure that he or she also take the steps required under 35 U.S.C. 154(b)(4)(A) in a timely manner. Nothing in the request for recalculation should be construed as providing an alternative time frame for commencing a civil action under 35 U.S.C. 154(b)(4)(A).

Any questions concerning this decision should be directed to the Office of Patent Legal Administration at 571-272-7702.

UNITED STATES PATENT AND TRADEMARK OFFICE

Commissioner for Patents
United States Patent and Trademark Office
P.O. Box 1450
Alexandria, VA 22313-1450
www.uspto.gov
DIW Mar-09

RG & ASSOCIATES
1103 TWIN CREEKS DR.
ALLEN TX 75013

COPY MAILED

MAR 3 1 2009

OFFICE OF PETITIONS

In re Application of	:	
Monica Rose Martino	:	DECISION ON PETITION
Application Number: 11/142723	:	
Filing Date: 06/01/2005	:	
Attorney Docket Number: IPE	:	
CONT 2	:	

This is a decision on the petition filed on February 20, 2009, under 37 CFR 1.137(b)[1] to revive the above-identified application.

The petition is **GRANTED**.

This application became abandoned on January 8, 2009, for failure to timely submit corrected drawings as required by the Notice of Allowability mailed on October 7, 2008, which set a three (3) month statutory period for reply. Notice of Abandonment was mailed on February 2, 2009.

---

[1] Effective December 1, 1997, the provisions of 37 CFR 1.137(b) now provide that where the delay in reply was unintentional, a petition may be filed to revive an abandoned application or a lapsed patent pursuant to 37 CFR 1.137(b). A grantable petition filed under the provisions of 37 CFR 1.137(b) must be accompanied by:

(1) the required reply, unless previously filed. In a nonprovisional application abandoned for failure to prosecute, the required reply may be met by the filing of a continuing application. In a nonprovisional application filed on or after June 8, 1995, and abandoned for failure to prosecute, the required reply may also be met by the filing of a request for continued examination in compliance with § 1.114. In an application or patent, abandoned or lapsed for failure to pay the issue fee or any portion thereof, the required reply must be the payment of the issue fee or any outstanding balance thereof. In an application abandoned for failure to pay the publication fee, the required reply must include payment of the publication fee.

(2) the petition fee as set forth in 37 CFR 1.17(m);

(3) a statement that the entire delay in filing the required reply from the due date for the reply until the filing of a grantable petition pursuant to 37 CFR 1.137(b) was unintentional. The Director may required additional information where there is a question whether the delay was unintentional; and

(4) any terminal disclaimer (and fee as set forth in 37 CFR 1.20(d)) required pursuant to 37 CFR 1.137(d)).

Receipt of the corrected drawing sheet filed with the present petition is acknowledged.

The application is referred to the Office of Data Management for further processing.

Telephone inquiries concerning this matter may be directed to the undersigned at (571) 272-3231.

D Wood

Douglas I. Wood
Senior Petitions Attorney
Office of Petitions

UNITED STATES PATENT AND TRADEMARK OFFICE

Commissioner for Patents
United States Patent and Trademark Office
P.O. Box 1450
Alexandria, VA 22313-1450
www.uspto.gov

FITZPATRICK CELLA HARPER & SCINTO
30 ROCKEFELLER PLAZA
NEW YORK NY 10112

COPY MAILED

OCT 0 4 2005

OFFICE OF PETITIONS

In re Application of :
Yuji Suga :
Application No. 11/142,734 :
Filed: June 2, 2005 :
Attorney Docket No. 00862.109755 :

ON PETITION

This is a decision on the petition filed August 19, 2005, requesting that the above-identified application be accorded a filing date of June 2, 2005, with Figure 9 as described in the specification as part of the original disclosure.

On June 2, 2005, applicant filed the above-identified application. On June 20, 2005, the Office of Initial Patent Examination mailed a Notice to File Missing Parts of Nonprovisional Application, stating, *inter alia*, that the Office had accorded the application a filing date of June 2, 2005, and advising applicant that Figure 9 described in the specification appeared to be omitted from the application.

In response, on August 19, 2005, applicant submitted, *inter alia*, the present petition, the petition fee, and a copy of Figure 9. Additionally, applicant submitted a copy of his returned, date-stamped postcard receipt acknowledging receipt of 17 sheets of formal drawings in the USPTO on June 2, 2005. Applicant asserted that a total of 17 sheets of drawings (including Figure 9) were submitted on filing, as evidenced by the copy of the returned, date-stamped postcard receipt, the ADS, the Utility Patent Application Transmittal, and the Fee Transmittal.

The Office file is the official record of the papers originally filed in this application. A review of the original sheets of drawings in official file[1] reveals that Figure 9 was not located among the application papers. A petitioner alleging that a paper was filed in the Office and later misplaced has the burden of proving the allegation by a preponderance of the evidence.

A review of the record indicates that applicant did indeed file 17 sheets of drawings, which included Figures 1-8 and 10-17. However, the 17 drawing sheets did not include Figure 9, but rather consisted of 16 sheets of drawing figures and one blank sheet. Therefore, Figure 9 cannot be considered a part of the original disclosure of the application because it was not present on June 2, 2005; the date the application was filed. Accordingly, the application cannot be accorded the filing date of June 2, 2005, with Figure 9 as a part of the original disclosure.

[1] For the purpose of deciding the present petition, the Office obtained and reviewed the original paper drawing sheets submitted by applicant on June 2, 2005. Although the original paper drawing sheets were subsequently scanned into the Image File Wrapper Database, the USPTO retained a paper copy of the documents submitted on filing.

Accordingly, the petition is dismissed.

The Office of Initial Patent Examination is directed to process the application with a filing date of June 2, 2005, using only the drawings submitted on that date. Figure 9 submitted with the petition on August 19, 2005, will not be entered at this time.

Telephone inquiries specific to this matter should be directed to the undersigned at (571) 272-3211.

Christina Tartera Donnell

Christina Tartera Donnell
Senior Petitions Attorney
Office of Petitions

SPE RESPONSE FOR CERTIFICATE OF CORRECTION

Paper No.: X

DATE : **February 25, 2008**

TO SPE OF : ART UNIT **1647**

SUBJECT : Request for Certificate of Correction for Appl. No.: **11/142736** Patent No.: **7288632 B2**

A response is requested with respect to a request for a certificate of correction.

With respect to the change(s) requested to correct Office and/or Applicant's errors, should the patent read as shown in the certificate of correction attached herewith or the COCIN document(s), in IFW images for the above-identified patented application? No new matter should be introduced, nor should the scope or meaning of the claims be changed.

If the response is for an IFW, within 7 days, please complete and forward the response, to the employee (named below) via scanning into application images, using document code **COCX**.

DO NOT SENT TO ATTORNEY

If the response is for a paper file wrapper, please complete the response and forward the response with the paper file wrapper, to the employee (named below), within **7** days, to:

Certificates of Correction Branch (CofC)
South Tower - 9A22
Palm Location 7580

You can fax the Directors/SPE response to 571-270-9990

LAMONTE NEWSOME
Certificates of Correction Branch
703-308-9390 ext. 112

Thank You For Your Assistance

The request for issuing the above-identified correction(s) is hereby:
Note your decision on the appropriate box.

X Approved	**All** changes apply.
❑ **Approved in Part**	Specify below which changes **do not** apply.
❑ **Denied**	State the reasons for denial below.

Comments: _____

_____

[signature] 1647
SPE **Art Unit**

UNITED STATES PATENT AND TRADEMARK OFFICE

Commissioner for Patents
United States Patent and Trademark Office
P.O. Box 1450
Alexandria, VA 22313-1450
www.uspto.gov

CONLEY ROSE, P.C.
DAVID A. ROSE
P.O. BOX 3267
HOUSTON, TX 77253-3267

COPY MAILED

AUG 2 8 2008

OFFICE OF PETITIONS

In re Application of	:	
Palazzolo et al.	:	
Application No. 11/142,747	:	DECISION ON PETITION
Filed: June 1, 2005	:	
Attorney Docket No. 2238-02201	:	

This is a decision on the petition under the unintentional provisions of 37 CFR 1.137(b), filed June 13, 2008, to revive the above-identified application.

The petition is **GRANTED**.

This application became abandoned for failure to timely pay the issue and publication fees on or before April 26, 2007, as required by the Notice of Allowance and Fee(s) Due mailed January 26, 2007. Accordingly, the date of abandonment of this application is April 27, 2007. A Notice of Abandonment was mailed May 22, 2007.

The petition satisfies the requirements of 37 CFR 1.137(b) in that petitioner has supplied (1) the reply in the form of payment of the issue fee of $720.00 and the publication fee of $300.00, (2) the petition fee of $770.00; and (3) a proper statement of unintentional delay.

It is not apparent whether the statement of unintentional delay was signed by a person who would have been in a position of knowing that the **entire** delay in filing the required reply from the due date for the reply until the filing of a grantable petition pursuant to 37 CFR 1.137(b) was unintentional. Nevertheless, in accordance with 37 CFR 10.18, the statement is accepted as constituting a certification of unintentional delay. However, in the event that petitioner has no knowledge that the delay was unintentional, petitioner must make such an inquiry to ascertain that, in fact, the delay was unintentional. If petitioner discovers that the delay was intentional, petitioner must notify the Office.

Further, the Power of Attorney filed July 8, 2008 is hereby accepted. The Notice of Acceptance of Power of Attorney is enclosed.

Additionally, due to an overpayment of the issue fee, petitioner's deposit account will be refunded $420.00 in due course.

Telephone inquiries concerning this decision should be directed to Joan Olszewski at (571) 272-7751.

This application is being referred to the Office of Data Management for processing into a patent.

Liana Walsh
Petitions Examiner
Office of Petitions

Enclosure: Notice of Acceptance of Power of Attorney

UNITED STATES PATENT AND TRADEMARK OFFICE

UNITED STATES DEPARTMENT OF COMMERCE
United States Patent and Trademark Office
Address: COMMISSIONER FOR PATENTS
P.O. Box 1450
Alexandria, Virginia 22313-1450
www.uspto.gov

APPLICATION NUMBER	FILING OR 371(C) DATE	FIRST NAMED APPLICANT	ATTY. DOCKET NO./TITLE
11/142,747	06/01/2005	Alan Palazzolo	2238-02201TSW

CONFIRMATION NO. 8388

POA ACCEPTANCE LETTER

23505
CONLEY ROSE, P.C.
David A. Rose
P. O. BOX 3267
HOUSTON, TX 77253-3267

OC000000031703492

Date Mailed: 08/22/2008

NOTICE OF ACCEPTANCE OF POWER OF ATTORNEY

This is in response to the Power of Attorney filed 07/08/2008.

The Power of Attorney in this application is accepted. Correspondence in this application will be mailed to the above address as provided by 37 CFR 1.33.

/jolszewski/

Office of Data Management, Application Assistance Unit (571) 272-4000, or (571) 272-4200, or 1-888-786-0101

UNITED STATES PATENT AND TRADEMARK OFFICE

Commissioner for Patents
United States Patent and Trademark Office
P.O. Box 1450
Alexandria, VA 22313-1450
www.uspto.gov

FINNEGAN, HENDERSON, FARABOW
GARRETT & DUNNER, LLP
901 NEW YORK AVENUE, NW
WASHINGTON, DC 20001-4413

MAILED

AUG 19 2009

OFFICE OF PETITIONS

In re Application of	:	
David J. Pilling	:	
Application No. 11/142,758	:	DECISION ON PETITION
Filed: May 31, 2005	:	TO WITHDRAW FROM
Attorney Docket No. 9145.0018-01	:	RECORD

This is a decision on the Request to Withdraw as attorney or agent of record under 37 CFR § 1.36(b), filed July 9, 2009.

The request is **NOT APPROVED**.

The request cannot be approved because practitioner/practitioners associated with Customer Number 22852 requesting the withdrawal have not certified that they have (1) given reasonable notice to the client, prior to the expiration of the reply period, that the practitioner(s) intends to withdraw from employment; (2) delivered to the client or duly authorized representative of the client papers and property (including funds) to which the client is entitled; and (3) notified the client of any responses that may be due and the time frame within which the client must respond. The failure to do so may subject the practitioner to discipline[1]. *See USPTO Form No. PTO/SB/83.*

It is noted that the assignee of record has requested that the application be transferred to another law firm. However, the present request cannot be approved since the assignee has failed to properly intervene in the above-identified application by filing the required Statement under 37 CFR 3.73(b)[2]. *See USPTO Form No. PTO/SB/96.*

Additionally, the Office will also no longer change the correspondence address to that of a new practitioner unless the Request is accompanied by a power of attorney to a new practitioner (e.g., Form PTO/SB/82).

---

[1] Practitioner should note that false certification may violate a practitioners' duty under 37 CFR 10.23(b)(4) and (b)(5).

[2] In order to request or take action in a patent matter, the assignee must establish its ownership of the patent to the satisfaction of the Director. In this regard, a Statement under 37 CFR 3.73(b) must have either: (i) documentary evidence of a chain of title from the original owner to the assignee (*e.g.*, copy of an executed assignment), and a statement affirming that the documentary evidence of the chain of title from the original owner to the assignee was or concurrently is being submitted for recordation pursuant to § 3.11; or (ii) a statement specifying where documentary evidence of a chain of title from the original owner to the assignee is recorded in the assignment records of the Office (*e.g.*, reel and frame number).

All future communications from the Office will continue to be directed to the above-listed address until otherwise notified by the applicant.

Telephone inquiries concerning this decision should be directed to undersigned at (571) 272-3226. All other inquiries concerning the examination or status of this application should be directed to the Technology Center.

Andrea Smith
Petitions Examiner
Office of Petitions

cc: HAYNES AND BOONE, LLP
IP SECTION
2323 VICTORY AVENUE
SUITE 700
DALLAS, TX 75219

UNITED STATES PATENT AND TRADEMARK OFFICE

UNITED STATES DEPARTMENT OF COMMERCE
United States Patent and Trademark Office
Address: COMMISSIONER FOR PATENTS
P.O. Box 1450
Alexandria, Virginia 22313-1450
www.uspto.gov

APPLICATION NO.	FILING DATE	FIRST NAMED INVENTOR	ATTORNEY DOCKET NO.	CONFIRMATION NO.
11/142,762	06/01/2005	Bernd Krause	GP-305878	6713

65798 7590 05/14/2010
MILLER IP GROUP, PLC
GENERAL MOTORS CORPORATION
42690 WOODWARD AVENUE
SUITE 200
BLOOMFIELD HILLS, MI 48304

EXAMINER
MARKS, JACOB B

ART UNIT	PAPER NUMBER
1795	

MAIL DATE	DELIVERY MODE
05/14/2010	PAPER

Please find below and/or attached an Office communication concerning this application or proceeding.

The time period for reply, if any, is set in the attached communication.

UNITED STATES PATENT AND TRADEMARK OFFICE

Commissioner for Patents
United States Patent and Trademark Office
P.O. Box 1450
Alexandria, VA 22313-1450
www.uspto.gov

wk

Mailed : MAY 14 2010

In re Application of
Krause et. al.
Serial No. 11/142,762
Filed: June 1, 2005
For: REDUCTION OF VOLTAGE LOSS BY VOLTAGE CYCLE THROUGH THE USE OF SPECIALLY FORMED BIPOLAR PLATES

: DECISION ON PETITION

This is a decision on the PETITION FILED UNDER 37 CFR 1.144 on September 22, 2009. The delay in responding to this petition is regretted.

The Examiner required a restriction between Group I, claims 1-14, drawn to a fuel cell and Group II, claims 15-19, drawn to a method for reducing voltage cycling in a fuel cell. The Examiner further required an election of species if Group I, claims 1-14 was elected. The patentably distinct species were between claims 1-10 and claims 11-14. On March 17, 2009, applicant elected Group I, claims 1-14 and the species claims 1-10 with traverse.

Applicant asserts that the election of species is improper and should be withdrawn. The Examiner in the February 27, 2009 restriction states that no claim is generic. Applicant submits that independent claim 1 is generic to independent claim 11. Claim 1 claims a fuel cell comprising a flow field plate including primary flow channels and secondary flow channels where the primary flow channels have one flow property and the secondary flow channels have another flow property so that the primary flow channels and the secondary flow channels have different reactant gas low distributions. Claim 11 claims a fuel cell including a cathode side flow field plate and an anode side flow filed plate that both include primary flow channels and secondary flow channels, where the primary flow channels have a lower pressure drop than the pressure drop of the secondary flow channels. Applicant asserts that by stating that the primary and secondary flow channels have different pressure drops clearly means that they have different flow properties and different reactant gas flow distributions as set forth on claim 1. One of the flow properties set forth in dependent claim 2 states that the primary flow channels have a lower pressure drop than the pressure drop of the secondary flow channels.

The Examiner's position is that there is an examination and search burden for these patentably distinct species due to their mutually exclusive characteristics. The species require a different field of search and/or the prior art applicable to one species would not likely be applicable to another species and /or the species are likely to raise different non-prior art issues under35 USC 101 and /or 35 USC 112, first paragraph.

Where, as disclosed in the application, the several inventions claimed are related, and such related inventions are not patentably distinct as claimed, restriction under 35 U.S.C. 121 is never proper (MPEP § 806.05

Where the inventions as claimed are shown to be independent or distinct under the criteria of MPEP § 806.05(c) - § 806.06, the examiner, in order to establish reasons for insisting upon restriction, must explain why there would be a serious burden on the examiner if restriction is not required. Thus the examiner must show by appropriate explanation one of the following:

(A) **Separate classification thereof**: This shows that each invention has attained recognition in the art as a separate subject for inventive effort, and also a separate field of search. Patents need not be cited to show separate classification.

(B) **A separate status in the art when they are classifiable together**: Even though they are classified together, each invention can be shown to have formed a separate subject for inventive effort when the examiner can show recognition of separate inventive effort by inventors. Separate status in the art may be shown by citing patents which are evidence of such separate status, and also of a separate field of search.

(C) **A different field of search**: Where it is necessary to search for one of the inventions in a manner that is not likely to result in finding art pertinent to the other invention(s) (e.g., searching different classes/subclasses or electronic resources, or employing different search queries, a different field of search is shown, even though the two are classified together. The indicated different field of search must in fact be pertinent to the type of subject matter covered by the claims. Patents need not be cited to show different fields of search.

In the present case, however, the classification is the same and the field of search is the same and there is no clear indication of separate future classification and field of search, no reasons exist for dividing among independent or related inventions.

The Examiner has not demonstrated that there would be a serious burden if the restriction is not required. Claims are definitions or descriptions of inventions. *Claims themselves are never species.* The scope of a claim may be limited to a single disclosed embodiment (i.e., a single species, and thus be designated a *specific species claim*). Alternatively, a claim may *encompass two or more of the disclosed embodiments (and thus be designated *a generic or genus claim).*

Species always refer to the different embodiments of the invention.

Species may be either independent or related as disclosed (see MPEP § 806.04 and § 806.04(b)).

The Examiner has only identified Group I-A as claims 1-10, reciting the language in independent claims 1-10 and Group I-B as claimed 11-14, reciting the language in

independent claim 11. The Examiner has not identified the species as different embodiments, nor established that a serious burden would exist if claims 1-14 are examined together.

DECISION

The petition is **GRANTED.**

11/142,762

The Examiner is directed to examine claims 1-14 together and the requirement for election of the species of Group I-A and I-B is withdrawn. Claims 15-19 remain withdrawn from consideration.

/JACQUELINE STONE/

Jacqueline M. Stone, Director
Technology Center 1700
Chemical and Materials Engineering

John A. Miller
MILLER IP GROUP, PLC
GENERAL MOTORS CORPORATION
42690 WOODWARD AVENUE
SUITE 200
BLOOMFIELD HILLS MI 48304

UNITED STATES PATENT AND TRADEMARK OFFICE

Commissioner for Patents
United States Patent and Trademark Office
P.O. Box 1450
Alexandria, VA 22313-1450
www.uspto.gov

Rita Jean Carpenter
1609 Washington Street
Natchitoches LA 71457

COPY MAILED

SEP 20 2007

OFFICE OF PETITIONS

In re Application of	:	
Rita Jean Carpenter		:
Application No.: 11/142775	:	DECISION ON
Filing or 371(c) Date: 05/31/2005	:	PETITION
Title of Invention:	:	
HEART-SHAPED ELECTRICALLY	:	
HEATED HAIR CURLER SET	:	

This is a decision in response to the Petition for Revival of Application Abandoned Unintentionally Under 37 CFR 1.137(b), filed April 26, 2007. The delay in treating this petition is regretted.

This Petition is hereby **granted**.

The above-identified application became abandoned for failure to timely and properly reply to the Notice of Non-Compliant Amendment ("Notice"), mailed October 12, 2006. The Notice set a one (1) month period for reply. Extensions of time were available under 37 CFR 1.136(a). No reply having been received, the application became abandoned on November 13, 2006. A Notice of Abandonment was mailed February 23, 2007.

Applicant files the present petition and Amendment in response to the Notice. The petition satisfies the conditions for revival pursuant to the provisions of 37 CFR 1.137(b) in that the petition includes (1) the reply; (2) the petition fee; and (3) the required statement of unintentional delay. Accordingly, the reply is accepted as having been unintentionally delayed.

Applicant is advised that, because this application was filed on or after June 8, 1995, no Terminal Disclaimed (TD) is required. See, 37 CFR 1.137(b). As such, the TD will not be entered. The fee is unnecessary and will be refunded via Treasury Check.

This application is being referred to Technology Center Art Unit 3742 for processing of the reply to the Notice filed with the petition in due course.

Telephone inquiries concerning this decision should be directed to the undersigned at (571) 272-3232.

Derek L. Woods
Attorney
Office of Petitions

UNITED STATES PATENT AND TRADEMARK OFFICE

UNITED STATES DEPARTMENT OF COMMERCE
United States Patent and Trademark Office
Address: COMMISSIONER FOR PATENTS
P.O. Box 1450
Alexandria, Virginia 22313-1450
www.uspto.gov

SAP_DLG
7910 IVANHOE AVE.
325
LA JOLLA, CA 92037

Mail Date: 04/23/2010

Applicant	: David Brookler	: DECISION ON REQUEST FOR
Patent Number	: 7657511	: RECALCULATION of PATENT
Issue Date	: 02/02/2010	: TERM ADJUSTMENT IN VIEW
Appliction No	: 11/142,809	: OF WYETH AND NOTICE OF INTENT TO
Filed	: 05/31/2005	: ISSUE CERTIFICATE OF CORRECTION
		:

The Request for Recalculation is **GRANTED** to the extent indicated.

The patent term adjustment has been determined to be **292** days. The USPTO will *sua sponte* issue a certificate of correction reflecting the amount of PTA days determined by the recalculation.

Prior to the issuance of the certificate of correction, the USPTO will afford patentee an opportunity to be heard and request reconsideration. Accordingly, patentee has **one month or thirty (30) days**, whichever is longer, to file a request for reconsideration of this patent term adjustment calculation. See 35 U.S.C. 154(b)(3)(B)(ii) and 37 CFR 1.322(a)(4). No extensions of time will be granted under 37 CFR 1.136.

Patentee should use document code PET.OP if electronically filing a request for reconsideration of this patent term adjustment calculation. The patentee must also include the information required by 37 CFR 1.705(b)(2) and the fee required by 37 CFR 1.18(e). If patentee does not file a timely request for reconsideration of this patent term adjustment calculation including the information required by 37 CFR 1.705(b)(2) and the fee required by 37 CFR 1.18(e), the USPTO will issue a certificate of correction reflecting the PTA determination noted above.

Patentee should be aware that in order to preserve the right to review in the United States District Court for the District of Columbia of the USPTO patent term adjustment determination, patentee must ensure that he or she also take the steps required under 35 U.S.C. 154(b)(4)(A) in a timely manner. Nothing in the request for recalculation should be construed as providing an alternative time frame for commencing a civil action under 35 U.S.C. 154(b)(4)(A).

Any questions concerning this decision should be directed to the Office of Patent Legal Administration at 571-272-7702.

UNITED STATES PATENT AND TRADEMARK OFFICE

UNITED STATES DEPARTMENT OF COMMERCE
United States Patent and Trademark Office
Address: COMMISSIONER FOR PATENTS
P.O. Box 1450
Alexandria, Virginia 22313-1450
www.uspto.gov

SAP_DLG
7910 IVANHOE AVE.
325
LA JOLLA, CA 92037

Mail Date: 05/17/2010

Applicant : David Brookler
Patent Number : 7657511
Issue Date : 02/02/2010
Application No : 11/142,809
Filed : 05/31/2005

: NOTICE CONCERNING IMPROPER
: CALCULATION OF PATENT TERM
: ADJUSTMENT BASED UPON USPTO
: IMPROPERLY MEASURING REDUCTION
: PERIOD UNDER 37 CFR 1.704(c)(10).

The United States Patent and Trademark Office (USPTO) discovered that in processing the recent recalculation decisions mailed in response to patentee's filed Request for Recalculation of Patent Term Adjustment in view of Wyeth, the USPTO improperly measured the reduction period for reductions under 37 CFR 1.704(c)(10). Pursuant to 37 CFR 1.704(c)(10), patentee's reduction begins on the date of filing the amendment under 37 CFR 1.312 ("1.312 amendment") or other related paper and ends on the date that the Office mails a response to the filing of the 1.312 amendment or other paper. It has been discovered that during the recalculation, the calculation failed to the limit the reduction to the mail date of the response to the 1.312 amendment or other paper. Accordingly, patentee's reductions were greater than warranted.

This notice **VACATES** the previous GRANTED request for recalculation and provides patentee with a revised GRANTED recalculation.

The patent term adjustment has been determined to be **332** days. The USPTO will *sua sponte* issue a certificate of correction reflecting the amount of patent term adjustment (PTA) days determined by the recalculation.

Prior to the issuance of the certificate of correction, the USPTO will afford patentee an opportunity to be heard and request reconsideration. Accordingly, patentee has **one month or thirty (30) days** from the mail date of this notice, whichever is longer, to file a request for reconsideration of this PTA calculation. See 35 U.S.C. § 154(b)(3)(B)(ii) and 37 CFR 1.322(a)(4).

Patentee should use document code PET.OP if electronically filing a request for reconsideration of this PTA calculation. The patentee must also include the information required by 37 CFR 1.705(b)(2), and the fee required by 37 CFR 1.18(e). If patentee does not file a timely request for reconsideration of this PTA calculation, including the information required by 37 CFR 1.705(b)(2) and the fee required by 37 CFR 1.18(e), the USPTO will issue a certificate of correction reflecting the PTA determination noted above.

Patentee should be aware that in order to preserve the right of review of the USPTO's PTA determination in the United States District Court for the District of Columbia, patentee must ensure that the steps required under 35 U.S.C. § 154 (b)(4) are taken in a timely manner. Nothing in the request for recalculation should be construed as providing an alternative time frame for commencing a civil action under 35 U.S.C. § 154(b)(4).

UNITED STATES PATENT AND TRADEMARK OFFICE

COMMISSIONER FOR PATENTS
UNITED STATES PATENT AND TRADEMARK OFFICE
P.O. BOX 1450
ALEXANDRIA, VA 22313-1450
www.uspto.gov

Paper No.

PERKINS COIE LLP/MSFT
P. O. BOX 1247
SEATTLE WA 98111-1247

COPY MAILED

AUG 06 2009

OFFICE OF PETITIONS

In re Application of	:	
Xiao et al.	:	
Application No. 11/142,817	:	ON APPLICATION FOR
Filed: May 31, 2005	:	PATENT TERM ADJUSTMENT
Atty Docket No. 418268152US	:	
Title: ACCELERATED FACE	:	
DETECTION BASED ON PRIOR	:	
PROBABILITY OF A VIEW	:	

This is in response to the "APPLICATION FOR PATENT TERM ADJUSTMENT RECONSIDERATION UNDER 37 C.F.R. § 1.705(B)," filed January 22, 2009. Applicant submits that the correct patent term adjustment to be indicated on the patent is nine hundred and fifteen (915) days, not five hundred and twenty (520) days as calculated by the Office as of the mailing of the initial determination of patent term adjustment. Applicant requests this correction solely on the basis that the Office will take in excess of three years to issue this patent.

As the instant application for patent term adjustment requests reconsideration of the patent term adjustment as it relates to the Office's failure to issue the patent within 3 years of the filing date, the application for patent term adjustment under 37 CFR 1.705(b) is **DISMISSED as PREMATURE**.

Knowledge of the actual date the patent issues is required to calculate the amount, if any, of additional patent term patentee is entitled to for Office failure to issue the patent within 3 years. See § 1.702(b). (This is true even where a request for continued examination (RCE) was filed). The computer will not undertake the § 1.702(b) calculation until the actual date of issuance of the patent has been determined. Likewise, the computer will not calculate any further Office delay under § 1.702(a)(4) or applicant delay under § 1.704(c)(10) until the actual date of issuance of the patent has been determined. As

such, the Office can not make a determination on the correctness of the patent term adjustment until the patent has issued.

Requesting reconsideration of the patent term adjustment to be indicated on the patent under 37 CFR 1.705(b) based on the initial determination of patent term adjustment and a projected issuance date of the patent (or even the filing date of the request for continued examination) is premature. Accordingly, it is appropriate to dismiss as premature such a request.

Rather than file an application for patent term adjustment under 37 CFR 1.705(b) contesting the 37 CFR 1.702(b) calculation at the time of the mailing of the notice of allowance, applicant is advised that they may wait until the time of the issuance of the patent and file a request for reconsideration of the patent term adjustment pursuant to 37 CFR 1.705(d). As the USPTO does not calculate the amount of time earned pursuant to 37 CFR 1.702(b) until the time of the issuance of the patent, the Office will consider any request for reconsideration of the patent term adjustment due to an error in the calculation of 37 CFR 1.702(b) to be timely if the request for reconsideration is filed within two months of the issuance of the patent. However, as to all other bases for contesting the initial determination of patent term adjustment received with the notice of allowance, applicant must timely file an application for patent term adjustment prior to the payment of the issue fee[1].

The Office acknowledges submission of the $200.00 fee set forth in 37 CFR 1.18(e) for consideration of the application for patent term adjustment under 37 CFR 1.705(b).

Any request for reconsideration of the patent term adjustment indicated on the patent must be timely filed within 2 months

---

[1] For example, if applicant disputes both the calculation of patent term adjustment under 37 CFR 1.702(a)(1) for Office failure to mail a first Office action or notice of allowance not later than fourteen months after the date on which the application was filed and under 37 CFR 1.702(b) for Office failure to issue a patent within three years of the actual filing date of the application, then applicant must still timely file an application for patent term adjustment prior to the payment of the issue fee to contest the calculation of Office delay in issuing a first Office action or notice of allowance. See 37 CFR 1.705(b) and 35 U.S.C. 154(b)(3)(B). A dispute as to the calculation of the §1.702(a)(1) period raised on request for reconsideration of patent term adjustment under 37 CFR 1.705(d) will be dismissed as untimely filed.

after issuance pursuant to 37 CFR 1.705(d) and must include payment of the required fee under 37 CFR 1.18(e).

The Office of Data Management has been advised of this decision. This application is being referred to the Office of Data Management for issuance of the patent.

Telephone inquiries regarding this decision should be directed to Senior Attorney Paul Shanoski at (571) 272-3225.

Nancy Johnson
Senior Petitions Attorney
Office of Petitions

UNITED STATES PATENT AND TRADEMARK OFFICE

UNITED STATES DEPARTMENT OF COMMERCE
United States Patent and Trademark Office
Address: COMMISSIONER FOR PATENTS
P.O. Box 1450
Alexandria, Virginia 22313-1450
www.uspto.gov

PERKINS COIE LLP/MSFT
P. O. BOX 1247
SEATTLE, WA 98111-1247

Mail Date: 04/20/2010

Applicant	: Rong Xiao	: DECISION ON REQUEST FOR
Patent Number	: 7590267	: RECALCULATION of PATENT
Issue Date	: 09/15/2009	: TERM ADJUSTMENT IN VIEW
Appliction No	: 11/142,817	: OF WYETH AND NOTICE OF INTENT TO
Filed	: 05/31/2005	: ISSUE CERTIFICATE OF CORRECTION
		:

The Request for Recalculation is **GRANTED** to the extent indicated.

The patent term adjustment has been determined to be **992** days. The USPTO will *sua sponte* issue a certificate of correction reflecting the amount of PTA days determined by the recalculation.

Prior to the issuance of the certificate of correction, the USPTO will afford patentee an opportunity to be heard and request reconsideration. Accordingly, patentee has **one month or thirty (30) days**, whichever is longer, to file a request for reconsideration of this patent term adjustment calculation. See 35 U.S.C. 154(b)(3)(B)(ii) and 37 CFR 1.322(a)(4). No extensions of time will be granted under 37 CFR 1.136.

Patentee should use document code PET.OP if electronically filing a request for reconsideration of this patent term adjustment calculation. The patentee must also include the information required by 37 CFR 1.705(b)(2) and the fee required by 37 CFR 1.18(e). If patentee does not file a timely request for reconsideration of this patent term adjustment calculation including the information required by 37 CFR 1.705(b)(2) and the fee required by 37 CFR 1.18(e), the USPTO will issue a certificate of correction reflecting the PTA determination noted above.

Patentee should be aware that in order to preserve the right to review in the United States District Court for the District of Columbia of the USPTO patent term adjustment determination, patentee must ensure that he or she also take the steps required under 35 U.S.C. 154(b)(4)(A) in a timely manner. Nothing in the request for recalculation should be construed as providing an alternative time frame for commencing a civil action under 35 U.S.C. 154(b)(4)(A).

Any questions concerning this decision should be directed to the Office of Patent Legal Administration at 571-272-7702.

UNITED STATES PATENT AND TRADEMARK OFFICE

Commissioner for Patents
United States Patent and Trademark Office
P.O. Box 1450
Alexandria, VA 22313-1450
www.uspto.gov

Paper No.

MCANDREWS HELD & MALLOY, LTD
500 WEST MADISON STREET
SUITE 3400
CHICAGO IL 60661

MAILED

JUN 14 2010

OFFICE OF PETITIONS

In re Patent No. 7,522,098	:	
Diggelen	:	
Issue Date: April 21, 2009	:	
Application No. 11/142,824	:	LETTER REGARDING
Filed: June 1, 2005	:	FEE DEFICIENCY PAYMENT
Atty Docket No. 18984US01	:	

This is in response to the PETITION TO CORRECT SMALL ENTITY STATUS filed March 9, 2010. This responds to the letter entitled "Notice Under 37 C.F.R. §1.27(g) of Change in Small Entity Status and Payment of the Fees Due Under 37 C.F.R. §1.28(c)" filed May 15, 2007, notifying the Office of loss of entitlement to small entity status.

The Office no longer investigates or rejects original or reissue applications under 37 CFR 1.56. 1098 Off. Gaz. Pat. Office 502 (January 3, 1989). Therefore, nothing in this Notice is intended to imply that an investigation was done.

Petitioner notes that the status of the above-referenced patent application has never been changed from small entity to a large entity despite the filing of the notification on May 15, 2007, and requests that the status now be changed. It is acknowledged that an itemization of the fee deficiencies and payment as required by 37 CFR 1.28(c)(2)(ii) were previously filed on May 15, 2007. It is noted that Office records support a conclusion that the fees paid subsequent to the filing of the notification on May 15, 2007 were paid in the amount for a large entity.

Your notification of a loss of entitlement to small entity status is made of record and you fee deficiency submission under 37 CFR 1.28 is hereby **ACCEPTED**.

Telephone inquiries related to this decision should be directed to the undersigned at 571-272-3219.

Nancy Johnson
Senior Petitions Attorney
Office of Petitions

UNITED STATES PATENT AND TRADEMARK OFFICE

Commissioner for Patents
United States Patent and Trademark Office
P.O. Box 1450
Alexandria, VA 22313-1450
www.uspto.gov

CHARLES G. CALL
68 HORSE POND ROAD
WEST YARMOUTH MA 02673-2516

COPY MAILED

SEP 0 1 2006

OFFICE OF PETITIONS

In re Application of :
Logan, et al. :
Application No. 11/142,831 : ON PETITION
Filed: June 1, 2005 :
Attorney Docket No. F-22 :
For: METHODS AND APPARATUS FOR VENDING AND DELIVERING THE THE CONTENT OF DISK RECORDINGS

This is a decision on the petition under 37 CFR 1.137(b), filed April 7, 2006, to revive the above-identified application.

The above-identified application became abandoned for failure to reply to the Notice to File Missing Parts of Nonprovisional Application action mailed July 5, 2005, which set a period for reply of two (2) months. No extensions of time under the provisions of 37 CFR 1.136(a) were obtained. Accordingly, the application became abandoned on September 6, 2005. A Notice of Abandonment was mailed on March 16, 2006.

Petitioners have submitted filing fees, an executed declaration, and a surcharge in reply to the July 5, 2005 Notice, an acceptable statement of the unintentional nature of the delay in responding to the July 5, 2005 Notice, and the required petition fee.

The petition is **GRANTED**.

The application file is being forwarded to the Office of Initial Patent Examination for further processing.

Telephone inquiries concerning this decision should be directed to the undersigned at (571) 272-3230.

Shirene Willis Brantley

Shirene Willis Brantley
Senior Petitions Attorney
Office of Petitions
Office of the Deputy Commissioner
for Patent Examination Policy

UNITED STATES PATENT AND TRADEMARK OFFICE

Commissioner for Patents
United States Patent and Trademark Office
P.O. Box 1450
Alexandria, VA 22313-1450
www.uspto.gov

BANNER & WITCOFF LTD.,
ATTORNEYS FOR CLIENT NOS. 003797 & 013797
1001 G STREET , N.W.
SUITE 1100
WASHINGTON DC 20001-4597

COPY MAILED
JUN 23 2006
OFFICE OF PETITIONS

In re Application of :
Wang et al. :
Application No. 11/142,844 : ON PETITION
Filed: May 31, 2005 :
Title: Fast Error-Correcting of Embedded :
Interaction Codes

This is a decision on the petition under 37 CFR 1.181 to withdraw the holding of abandonment, filed April 17, 2006.

The petition to withdraw the holding of abandonment is **Dismissed**.

Any request for reconsideration should be filed within **TWO MONTHS** of the mailing date of this decision in order to be considered timely. 37 CFR 1.181(f). This time period may not be extended pursuant to 37 CFR 1.136.

This above-identified application became abandoned for failure to file a response to a Notice to File Missing Parts which was mailed on June 28, 2005. The Notice to File Missing Parts set an extendable two (2) month period for reply. No timely request for extension of time was obtained under the provisions of 37 CFR §1.136(a). Accordingly, this application became abandoned on August 28, 2005. A Notice of Abandonment was mailed on March 16, 2006.

Petitioner argues a response to the June 28, 2005 Notice was sent via facsimile on October 27, 2005. In support of the petition, petitioner has provided a copy of the correspondence which contains a certificate of transmission pursuant to 37 CFR 1.8, a statement from applicant's attorney and a copy of the sending unit's report confirming transmission.

However, a review of the documents submitted on petition, shows that the oath or declaration has not been provided. It is noted that two sheets of paper which are illegible have been scanned into the application. To the extent petitioner contends that the oath or declaration was submitted with the petition, a clear copy of the declaration should be submitted on renewed petition.

Further correspondence with respect to this matter should be addressed as follows:

By mail:	Mail Stop Petition Commissioner for Patents P.O. Box 1450 Alexandria, VA 22313-1450
By facsimile:	(571) 273-8300
By delivery service: (FedEx, UPS, DHL, etc.)	U.S. Patent and Trademark Office Customer Service Window, Randolph Building 401 Dulany Street Alexandria, VA 22314

Telephone inquiries concerning this matter should be directed to the undersigned at (571) 272-3215.

Charlema R. Grant

Charlema R. Grant
Petitions Attorney
Office of Petitions

UNITED STATES PATENT AND TRADEMARK OFFICE

Commissioner for Patents
United States Patent and Trademark Office
P.O. Box 1450
Alexandria, VA 22313-1450
www.uspto.gov

BANNER & WITCOFF, LTD.
ATTORNEYS FOR CLIENT NOS. 003797 & 013797
1100 13th STREET, N.W.
SUITE 1200
WASHINGTON DC 20005-4051

COPY MAILED
SEP 19 2008

In re Application of	:	
Wang et al.	:	
Application No. 11/142,844	:	DECISION ON PETITION
Filed: May 31, 2005	:	
Attorney Docket No. 003797.01178	:	

This is a decision on the renewed petition, filed July 19, 2006, which is being treated as a petition under 37 CFR 1.8(b), requesting withdrawal of the holding of abandonment in the above-identified application.

The petition is **GRANTED**.

This above-identified application became abandoned for failure to file a response to a Notice to File Missing Parts, which was mailed on June 28, 2005. The Notice to File Missing Parts set an extendable two (2) month period for reply. No timely request for extension of time was obtained under the provisions of 37 CFR §1.136(a). Accordingly, this application became abandoned on August 28, 2005. A Notice of Abandonment was mailed on March 16, 2006. A petition under 37 CFR 1.181 was dismissed June 23, 2006.

Petitioner argues a response to the June 28, 2005 Notice was sent via facsimile on October 27, 2005. In support of the petition, petitioner has provided a copy of the correspondence which contains a certificate of transmission pursuant to 37 CFR 1.8, a statement from applicant's attorney and a copy of the sending unit's report confirming transmission. A two month request for extension of time was also included in the reply.

The file record does not include the originally submitted papers. Failure to receive correspondence which includes a certificate of mailing or certificate of facsimile transmission is addressed in 37 CFR 1.8(b), reproduced below:

> In the event that correspondence is considered timely filed by being mailed or transmitted in accordance with paragraph (a) of this section, but not received in the U.S. Patent and Trademark Office after a reasonable amount of time has elapsed from the time of mailing or transmitting of the correspondence, or after the application is held to be abandoned, or after the proceeding is

dismissed, terminated, or decided with prejudice, the correspondence will be considered timely if the party who forwarded such correspondence:

(1) Informs the Office of the previous mailing or transmission of the correspondence promptly after becoming aware that the Office has no evidence of receipt of the correspondence;

(2) Supplies an additional copy of the previously mailed or transmitted correspondence and certificate; and

(3) Includes a statement which attests on a personal knowledge basis or to the satisfaction of the Director to the previous timely mailing or transmission. If the correspondence was sent by facsimile transmission, a copy of the sending unit's report confirming transmission may be used to support this statement.

The petition satisfies the above requirements of 37 CFR 1.8(b). Accordingly, the holding of abandonment for failure to timely file a reply to the Notice of Missing Parts of June 28, 2005 is hereby withdrawn and the application restored to pending status.

The copy of the reply received with the petition will be accepted in place of the reply shown to have been mailed (or transmitted by facsimile) on October 27, 2005.

This application is being referred to the Office of Patent Application Processing for appropriate action in the normal course of business on the reply received with petition.

Charlema Grant
Petitions Attorney
Office of Petitions

UNITED STATES PATENT AND TRADEMARK OFFICE

Commissioner for Patents
United States Patent and Trademark Office
P.O. Box 1450
Alexandria, VA 22313-1450
www.uspto.gov

HAYNES AND BOONE, LLP
901 MAIN STREET, SUITE 3100
DALLAS, TX 75202

COPY MAILED

JUL 0 5 2007

OFFICE OF PETITIONS

In re Application of

COOK, Robert L. et al.
Application No. 11/142,856
Filed: June 01, 2005
Attorney Docket No. **25791.367**

DECISION ON PETITION
TO WITHDRAW
FROM RECORD

This is a decision on the Request to Withdraw as attorney or agent of record under 37 C.F.R. § 1.36(b), filed April 19, 2007.

The request is **NOT APPROVED**.

A grantable request to withdraw as attorney/agent of record must be signed by every attorney/agent seeking to withdraw or contain a clear indication that one attorney is signing on behalf of another/others. A request to withdraw will not be approved unless at least 30 (thirty) days would remain between the date of approval and the later of the expiration date of a time to file a response or the expiration date of the maximum time period which can be extended under 37 C.F.R. § 1.136(a).

The request cannot be approved because no reasons for withdrawal have been provided. The Office cannot, at this time, determine whether practitioner's request is one of the mandatory or permissive reasons enumerated in 37 CFR 10.40. Any subsequent requests must include reasons for withdrawal. Please note that there is a space provided for on PTO/SB/83 (Request to Withdraw as Attorney or Agent) to supply practitioner's reasons.

All future communications from the Office will continue to be directed to the above-listed address until otherwise notified by applicant.

Telephone inquiries concerning this decision should be directed to Michelle R. Eason at 571-272- 4231.

Terri Williams

Terri Willliams
Petitions Examiner
Office of Petitions

cc: **KING & SPALDING, L.L.P.**
TODD MATTINGLY
1100 LOUISIANA STREET, SUITE 4000
HOUSTON, TX 77002

UNITED STATES PATENT AND TRADEMARK OFFICE

UNITED STATES DEPARTMENT OF COMMERCE
United States Patent and Trademark Office
Address: COMMISSIONER FOR PATENTS
P.O. Box 1450
Alexandria, Virginia 22313-1450
www.uspto.gov

APPLICATION NO.	FILING DATE	FIRST NAMED INVENTOR	ATTORNEY DOCKET NO.	CONFIRMATION NO.
11/142,865	06/02/2005	Thomas Tuschl	2923-710	8055

6449 7590 02/22/2010
ROTHWELL, FIGG, ERNST & MANBECK, P.C.
1425 K STREET, N.W.
SUITE 800
WASHINGTON, DC 20005

EXAMINER
BOWMAN, AMY HUDSON

ART UNIT	PAPER NUMBER
1635	

NOTIFICATION DATE	DELIVERY MODE
02/22/2010	ELECTRONIC

Please find below and/or attached an Office communication concerning this application or proceeding.

The time period for reply, if any, is set in the attached communication.

Notice of the Office communication was sent electronically on above-indicated "Notification Date" to the following e-mail address(es):

PTO-PAT-Email@rfem.com

UNITED STATES PATENT AND TRADEMARK OFFICE

FEB 2 2 2010

Commissioner for Patents
United States Patent and Trademark Office
P.O. Box 1450
Alexandria, VA 22313-1450
www.uspto.gov

ROTHWELL, FIGG, ERNST & MANBECK, P.C.
1425 K STREET, N.W.
SUITE 800
WASHINGTON DC 20005

In re Application of:	:
Tuschl et al.	:
Serial No.: 11/142,865	: PETITION DECISION
Filed: June 2, 2005	:
Attorney Docket No.: **2923-710**	

This is in response to the petition under 37 CFR § 1.59(b), filed February 12, 2010 to expunge information from the above identified application. This application has not been allowed.

Petitioner requests that information subjected to a protective order submitted on February 12, 2010, be expunged from the record. Petitioner states either: (A) that the information contains trade secret material, proprietary material and/or material that is subject to a protective order which has not been made public; or (B) that the information submitted was unintentionally submitted and the failure to obtain its return would cause irreparable harm to the party who submitted the information or to the party in interest on whose behalf the information was submitted, and the information has not otherwise been made public. The petition fee set forth in 37 CFR § 1.17(g) has been paid.

This is an examined application which is currently under non-final rejection. As such the information provided has been reviewed, in part, but proceedings in the application have not been terminated. As stated in M.P.E.P. 724, upon allowance or other action closing prosecution in an application, petition may be made for return of Proprietary information. The information cannot be expunged at this time.

The petition is **DISMISSED**. Petitioner may resubmit the petition subsequent to a Notice of Allowability or *ex parte Quayle* action being mailed in the application. No additional petition fee will be required at that time.

Should there be any questions about this decision please contact Marianne C. Seidel by letter addressed to Director, TC 1600, at the address listed above, or by telephone at 571-272-0584 or by facsimile sent to the general Office facsimile number, 703-872-9306.

Marianne C. Seidel
Quality Assurance Specialist
Technology Center 1600

UNITED STATES PATENT AND TRADEMARK OFFICE

UNITED STATES DEPARTMENT OF COMMERCE
United States Patent and Trademark Office
Address: COMMISSIONER FOR PATENTS
P.O. Box 1450
Alexandria, Virginia 22313-1450
www.uspto.gov

APPLICATION NO.	FILING DATE	FIRST NAMED INVENTOR	ATTORNEY DOCKET NO.	CONFIRMATION NO.
11/142,866	06/02/2005	Thomas Tuschl	2923-711	8071

6449 7590 02/22/2010
ROTHWELL, FIGG, ERNST & MANBECK, P.C.
1425 K STREET, N.W.
SUITE 800
WASHINGTON, DC 20005

EXAMINER
BOWMAN, AMY HUDSON

ART UNIT	PAPER NUMBER
1635	

NOTIFICATION DATE	DELIVERY MODE
02/22/2010	ELECTRONIC

Please find below and/or attached an Office communication concerning this application or proceeding.

The time period for reply, if any, is set in the attached communication.

Notice of the Office communication was sent electronically on above-indicated "Notification Date" to the following e-mail address(es):

PTO-PAT-Email@rfem.com

UNITED STATES PATENT AND TRADEMARK OFFICE

Commissioner for Patents
United States Patent and Trademark Office
P.O. Box 1450
Alexandria, VA 22313-1450
www.uspto.gov

FEB 22 2010

ROTHWELL, FIGG, ERNST & MANBECK, P.C.
1425 K STREET, N.W.
SUITE 800
WASHINGTON DC 20005

In re Application of:	:
Tuschl et al.	:
Serial No.: 11/142,866	: PETITION DECISION
Filed: June 2, 2005	:
Attorney Docket No.: **2923-711**	

This is in response to the petition under 37 CFR § 1.59(b), filed February 12, 2010 to expunge information from the above identified application. This application has not been allowed.

Petitioner requests that information subjected to a protective order submitted on February 12, 2010, be expunged from the record. Petitioner states either: (A) that the information contains trade secret material, proprietary material and/or material that is subject to a protective order which has not been made public; or (B) that the information submitted was unintentionally submitted and the failure to obtain its return would cause irreparable harm to the party who submitted the information or to the party in interest on whose behalf the information was submitted, and the information has not otherwise been made public. The petition fee set forth in 37 CFR § 1.17(g) has been paid.

This is an examined application which is currently under non-final rejection. As such the information provided has been reviewed, in part, but proceedings in the application have not been terminated. As stated in M.P.E.P. 724, upon allowance or other action closing prosecution in an application, petition may be made for return of Proprietary information. The information cannot be expunged at this time.

The petition is **DISMISSED**. Petitioner may resubmit the petition subsequent to a Notice of Allowability or *ex parte Quayle* action being mailed in the application. No additional petition fee will be required at that time.

Should there be any questions about this decision please contact Marianne C. Seidel by letter addressed to Director, TC 1600, at the address listed above, or by telephone at 571-272-0584 or by faesimile sent to the general Office facsimile number, 703-872-9306.

Marianne C. Seidel
Quality Assurance Specialist
Technology Center 1600

UNITED STATES PATENT AND TRADEMARK OFFICE

Commissioner for Patents
United States Patent and Trademark Office
P.O. Box 1450
Alexandria, VA 22313-1450
www.uspto.gov

MCDONNELL BOEHNEN HULBERT & BERGHOFF LLP
300 S. WACKER DRIVE
32ND FLOOR
CHICAGO, IL 60606

COPY MAILED

FEB 1 2 2007

OFFICE OF PETITIONS

In re Application of Krafft et al. :
Application No. 11/142,869 :
Filing Date: June 1, 2005 :
Attorney Docket No. 02-1039-A2 :

Decision on Petition

This is a decision on the petition under 37 CFR 1.137(b), filed February 2, 2007, to revive the above-identified application. This is also a decision on the petition under 37 CFR 1.182 filed February 9, 2007, requesting expedited consideration of the petition under 37 CFR 1.137(b).

The petition under 37 CFR 1.137(b) is **granted**.

The petition under 37 CFR 1.182 is **granted**.

The above-identified application became abandoned for failure to file a proper and complete reply to the Notice to File Missing Parts of Application (Notice) mailed July 12, 2005. The Notice set a period for reply of two (2) months from the mail date of the Notice. Petitioner obtained a five-month extension of time. Therefore, the above-identified application became abandoned on February 13, 2006. A Notice of Abandonment was mailed on September 22, 2006.

The instant petition requests revival of the application.

Petitioner has met the requirements to revive the above-identified application pursuant to 37 CFR 1.137(b). Therefore, the petition is granted and the application is revived.

The Office of Initial Patent Examination will be informed of the instant decision and will take steps to prepare the application for examination in due course.

Telephone inquiries regarding this communication should be directed to Petitions Attorney Steven Brantley at (571) 272-3203.

Charles Steven Brantley
Senior Petitions Attorney
Office of Petitions

UNITED STATES PATENT AND TRADEMARK OFFICE

UNITED STATES DEPARTMENT OF COMMERCE
United States Patent and Trademark Office
Address: COMMISSIONER FOR PATENTS
P.O. Box 1450
Alexandria, Virginia 22313-1450
www.uspto.gov

PERKINS COIE LLP/MSFT
P. O. BOX 1247
SEATTLE, WA 98111-1247

Mail Date: 04/20/2010

Applicant	: Elena Apreutesei	: DECISION ON REQUEST FOR
Patent Number	: 7594020	: RECALCULATION of PATENT
Issue Date	: 09/22/2009	: TERM ADJUSTMENT IN VIEW
Appliction No	: 11/142,901	: OF WYETH AND NOTICE OF INTENT TO
Filed	: 05/31/2005	: ISSUE CERTIFICATE OF CORRECTION
		:

The Request for Recalculation is **GRANTED** to the extent indicated.

The patent term adjustment has been determined to be **782** days. The USPTO will *sua sponte* issue a certificate of correction reflecting the amount of PTA days determined by the recalculation.

Prior to the issuance of the certificate of correction, the USPTO will afford patentee an opportunity to be heard and request reconsideration. Accordingly, patentee has **one month or thirty (30) days**, whichever is longer, to file a request for reconsideration of this patent term adjustment calculation. See 35 U.S.C. 154(b)(3)(B)(ii) and 37 CFR 1.322(a)(4). No extensions of time will be granted under 37 CFR 1.136.

Patentee should use document code PET.OP if electronically filing a request for reconsideration of this patent term adjustment calculation. The patentee must also include the information required by 37 CFR 1.705(b)(2) and the fee required by 37 CFR 1.18(e). If patentee does not file a timely request for reconsideration of this patent term adjustment calculation including the information required by 37 CFR 1.705(b)(2) and the fee required by 37 CFR 1.18(e), the USPTO will issue a certificate of correction reflecting the PTA determination noted above.

Patentee should be aware that in order to preserve the right to review in the United States District Court for the District of Columbia of the USPTO patent term adjustment determination, patentee must ensure that he or she also take the steps required under 35 U.S.C. 154(b)(4)(A) in a timely manner. Nothing in the request for recalculation should be construed as providing an alternative time frame for commencing a civil action under 35 U.S.C. 154(b)(4)(A).

Any questions concerning this decision should be directed to the Office of Patent Legal Administration at 571-272-7702.

UNITED STATES PATENT AND TRADEMARK OFFICE

UNITED STATES DEPARTMENT OF COMMERCE
United States Patent and Trademark Office
Address: COMMISSIONER FOR PATENTS
P.O. Box 1450
Alexandria, Virginia 22313-1450
www.uspto.gov

PERKINS COIE LLP/MSFT
P. O. BOX 1247
SEATTLE, WA 98111-1247

Mail Date: 05/17/2010

Applicant : Elena Apreutesei
Patent Number : 7594020
Issue Date : 09/22/2009
Application No : 11/142,901
Filed : 05/31/2005

: NOTICE CONCERNING IMPROPER
: CALCULATION OF PATENT TERM
: ADJUSTMENT BASED UPON USPTO
: IMPROPERLY MEASURING REDUCTION
: PERIOD UNDER 37 CFR 1.704(c)(10).

The United States Patent and Trademark Office (USPTO) discovered that in processing the recent recalculation decisions mailed in response to patentee's filed Request for Recalculation of Patent Term Adjustment in view of Wyeth, the USPTO improperly measured the reduction period for reductions under 37 CFR 1.704(c)(10). Pursuant to 37 CFR 1.704(c)(10), patentee's reduction begins on the date of filing the amendment under 37 CFR 1.312 ("1.312 amendment") or other related paper and ends on the date that the Office mails a response to the filing of the 1.312 amendment or other paper. It has been discovered that during the recalculation, the calculation failed to the limit the reduction to the mail date of the response to the 1.312 amendment or other paper. Accordingly, patentee's reductions were greater than warranted.

This notice **VACATES** the previous GRANTED request for recalculation and provides patentee with a revised GRANTED recalculation.

The patent term adjustment has been determined to be **822** days. The USPTO will *sua sponte* issue a certificate of correction reflecting the amount of patent term adjustment (PTA) days determined by the recalculation.

Prior to the issuance of the certificate of correction, the USPTO will afford patentee an opportunity to be heard and request reconsideration. Accordingly, patentee has **one month or thirty (30) days** from the mail date of this notice, whichever is longer, to file a request for reconsideration of this PTA calculation. See 35 U.S.C. § 154(b)(3)(B)(ii) and 37 CFR 1.322(a)(4).

Patentee should use document code PET.OP if electronically filing a request for reconsideration of this PTA calculation. The patentee must also include the information required by 37 CFR 1.705(b)(2), and the fee required by 37 CFR 1.18(e). If patentee does not file a timely request for reconsideration of this PTA calculation, including the information required by 37 CFR 1.705(b)(2) and the fee required by 37 CFR 1.18(e), the USPTO will issue a certificate of correction reflecting the PTA determination noted above.

Patentee should be aware that in order to preserve the right of review of the USPTO's PTA determination in the United States District Court for the District of Columbia, patentee must ensure that the steps required under 35 U.S.C. § 154 (b)(4) are taken in a timely manner. Nothing in the request for recalculation should be construed as providing an alternative time frame for commencing a civil action under 35 U.S.C. § 154(b)(4).

UNITED STATES PATENT AND TRADEMARK OFFICE

Commissioner for Patents
United States Patent and Trademark Office
P.O. Box 1450
Alexandria, VA 22313-1450
www.uspto.gov

BROWN, RAYSMAN, MILLSTEIN, FELDER & STEINER LLP
900 THIRD AVENUE
NEW YORK, NY 10022

COPY MAILED

MAR 0 9 2006

OFFICE OF PETITIONS

In re Application of	:	
Hausman et al.	:	
Application No. 11/142,908	:	Decision According Status
Filed: May 31, 2005	:	Under 37 CFR 1.47(a)
Attorney Docket No. 3524/76B CON	:	
For: Counterparty Credit Limits In	:	
Computerized Trading	:	

This is a decision on the petition under 37 CFR 1.47(a), filed December 19, 2005.

The petition is **granted**.

The above-identified application and papers have been reviewed and found in compliance with 37 CFR 1.47(a). This application is hereby accorded Rule 1.47(a) status.

As provided in Rule 1.47(c), this Office will forward notice of this application's filing to the non-signing inventor at the address given in the petition. Notice of the filing of this application will also be published in the Official Gazette.

The Office of Initial Patent Examination will be informed of the instant decision so that it may continue to prepare the application for examination.

Telephone inquiries regarding this communication should be directed to Petitions Attorney Steven Brantley at (571) 272-3203.

Charles Steven Brantley
Senior Petitions Attorney
Office of Petitions

UNITED STATES PATENT AND TRADEMARK OFFICE

UNITED STATES DEPARTMENT OF COMMERCE
United States Patent and Trademark Office
Address: COMMISSIONER FOR PATENTS
P.O. Box 1450
Alexandria, Virginia 22313-1450
www.uspto.gov

DUANE MORRIS LLP - Atlanta
IP DEPARTMENT
ATLANTIC CENTER PLAZA
1180 WEST PEACHTREE STREET, NW SUITE 700
ATLANTA, GA 30309-3348

Mail Date: 04/21/2010

Applicant	: David J. Benes	: DECISION ON REQUEST FOR
Patent Number	: 7658051	: RECALCULATION of PATENT
Issue Date	: 02/09/2010	: TERM ADJUSTMENT IN VIEW
Appliction No	: 11/142,909	: OF WYETH AND NOTICE OF INTENT TO
Filed	: 06/01/2005	: ISSUE CERTIFICATE OF CORRECTION
		:

The Request for Recalculation is **GRANTED** to the extent indicated.

The patent term adjustment has been determined to be **1105** days. The USPTO will *sua sponte* issue a certificate of correction reflecting the amount of PTA days determined by the recalculation.

Prior to the issuance of the certificate of correction, the USPTO will afford patentee an opportunity to be heard and request reconsideration. Accordingly, patentee has **one month or thirty (30) days**, whichever is longer, to file a request for reconsideration of this patent term adjustment calculation. See 35 U.S.C. 154(b)(3)(B)(ii) and 37 CFR 1.322(a)(4). No extensions of time will be granted under 37 CFR 1.136.

Patentee should use document code PET.OP if electronically filing a request for reconsideration of this patent term adjustment calculation. The patentee must also include the information required by 37 CFR 1.705(b)(2) and the fee required by 37 CFR 1.18(e). If patentee does not file a timely request for reconsideration of this patent term adjustment calculation including the information required by 37 CFR 1.705(b)(2) and the fee required by 37 CFR 1.18(e), the USPTO will issue a certificate of correction reflecting the PTA determination noted above.

Patentee should be aware that in order to preserve the right to review in the United States District Court for the District of Columbia of the USPTO patent term adjustment determination, patentee must ensure that he or she also take the steps required under 35 U.S.C. 154(b)(4)(A) in a timely manner. Nothing in the request for recalculation should be construed as providing an alternative time frame for commencing a civil action under 35 U.S.C. 154(b)(4)(A).

Any questions concerning this decision should be directed to the Office of Patent Legal Administration at 571-272-7702.

UNITED STATES PATENT AND TRADEMARK OFFICE

UNITED STATES DEPARTMENT OF COMMERCE
United States Patent and Trademark Office
Address: COMMISSIONER FOR PATENTS
P.O. Box 1450
Alexandria, Virginia 22313-1450
www.uspto.gov

PERKINS COIE LLP/MSFT
P. O. BOX 1247
SEATTLE, WA 98111-1247

Mail Date: 04/20/2010

Applicant	: Jian Wamg	: DECISION ON REQUEST FOR
Patent Number	: 7580576	: RECALCULATION of PATENT
Issue Date	: 08/25/2009	: TERM ADJUSTMENT IN VIEW
Appliction No	: 11/142,910	: OF WYETH AND NOTICE OF INTENT TO
Filed	: 06/02/2005	: ISSUE CERTIFICATE OF CORRECTION
		:

The Request for Recalculation is **GRANTED** to the extent indicated.

The patent term adjustment has been determined to be **802** days. The USPTO will *sua sponte* issue a certificate of correction reflecting the amount of PTA days determined by the recalculation.

Prior to the issuance of the certificate of correction, the USPTO will afford patentee an opportunity to be heard and request reconsideration. Accordingly, patentee has **one month or thirty (30) days**, whichever is longer, to file a request for reconsideration of this patent term adjustment calculation. See 35 U.S.C. 154(b)(3)(B)(ii) and 37 CFR 1.322(a)(4). No extensions of time will be granted under 37 CFR 1.136.

Patentee should use document code PET.OP if electronically filing a request for reconsideration of this patent term adjustment calculation. The patentee must also include the information required by 37 CFR 1.705(b)(2) and the fee required by 37 CFR 1.18(e). If patentee does not file a timely request for reconsideration of this patent term adjustment calculation including the information required by 37 CFR 1.705(b)(2) and the fee required by 37 CFR 1.18(e), the USPTO will issue a certificate of correction reflecting the PTA determination noted above.

Patentee should be aware that in order to preserve the right to review in the United States District Court for the District of Columbia of the USPTO patent term adjustment determination, patentee must ensure that he or she also take the steps required under 35 U.S.C. 154(b)(4)(A) in a timely manner. Nothing in the request for recalculation should be construed as providing an alternative time frame for commencing a civil action under 35 U.S.C. 154(b)(4)(A).

Any questions concerning this decision should be directed to the Office of Patent Legal Administration at 571-272-7702.

UNITED STATES PATENT AND TRADEMARK OFFICE

Commissioner for Patents
United States Patent and Trademark Office
P.O. Box 1450
Alexandria, VA 22313-1450
www.uspto.gov

TRELLIS INTELLECTUAL PROPERTY LAW GROUP PC
1900 EMBARCADERO ROAD, SUITE 109
PALO ALTO CA 94303

COPY MAILED

MAR 27 2007

OFFICE OF PETITIONS

In re Application of
PASCH, Nicholas F.
Application No. 11/142,926
Filed: June 1, 2005
Attorney Docket No. 100115-001000US

DECISION ON PETITION TO WITHDRAW FROM RECORD

This is a decision on the Request to Withdraw as attorney or agent of record under 37 C.F.R. § 1.36(b), filed October 24, 2006.

The request is **NOT APPROVED**.

A grantable request to withdraw as attorney/agent of record must be signed by every attorney/agent seeking to withdraw or contain a clear indication that one attorney is signing on behalf of another/others. A request to withdraw will not be approved unless at least 30 (thirty) days would remain between the date of approval and the later of the expiration date of a time to file a response or the expiration date of the maximum time period which can be extended under 37 C.F.R. § 1.136(a).

The Office cannot approve the request at this time since the reasons provided do not meet any of the conditions under the mandatory or permissive categories enumerated in 37 CFR 10.40. Section 10.40 of Title 37 of the Code of Federal Regulation states, "[a] practitioner shall not withdraw from employment in a proceeding before the Office without permission from the Office[.]" More specifically, 37 CFR 10.40 states, "[i]f paragraph (b) of this section is not applicable, a practitioner may not request permission to withdraw in matter pending before the Office unless such request or such withdrawal is" for one the permissive reasons listed in 37 CFR 10.40(c). The reasons set forth in the request, "termination of services", does not meet any of the conditions set forth in 37 CFR 10.40.

All future communications from the Office will continue to be directed to the above-listed address until otherwise notified by applicant.

Telephone inquiries concerning this decision should be directed to the undersigned at 571-272- 7253.

Monica A. Graves
Petitions Examiner
Office of Petitions

cc: **MITCHELL AND CULP PLLC**
ATTN: Richard M. Mitchell, Esq.
1001 MOREHEAD SQUARE DRIVE, SUITE 330
CHARLOTTE, NC 28203-4268

UNITED STATES PATENT AND TRADEMARK OFFICE

Commissioner for Patents
United States Patent and Trademark Office
P.O. Box 1450
Alexandria, VA 22313-1450
www.uspto.gov

TRELLIS INTELLECTUAL PROPERTY LAW GROUP PC
1900 EMBARCADERO ROAD, SUITE 109
PALO ALTO CA 94303

COPY MAILED

AUG 0 3 2007

OFFICE OF PETITIONS

In re Application of :

PASCH, Nicholas F. :
Application No. 11/142,926 :
Filed: June 1, 2005 :
Attorney Docket No. **100115-001000US** :

DECISION ON PETITION
TO WITHDRAW
FROM RECORD

This is a decision on the Request to Withdraw as attorney or agent of record under 37 C.F.R. § 1.36(b), filed March 28, 2007.

The request is **APPROVED.**

A grantable request to withdraw as attorney/agent of record must be signed by every attorney/agent seeking to withdraw or contain a clear indication that one attorney is signing on behalf of another/others. A request to withdraw will not be approved unless at least 30 (thirty) days would remain between the date of approval and the later of the expiration date of a time to file a response or the expiration date of the maximum time period which can be extended under 37 C.F.R. § 1.136(a).

The request was signed by Charles Kulas on behalf of all attorneys of record. All attorneys/agents associated have been withdrawn. Applicant is reminded that there is no attorney of record at this time.

The request to change the correspondence of record is not acceptable as the requested correspondence address is not that of: (1) the first named signing inventor; or (2) an intervening assignee of the entire interest under 37 C.F.R 3.71. All future communications from the Office will be directed to the first named signing inventor at the first copied address below until otherwise properly notified by the applicant.

There is an outstanding Office action mailed June 25, 2007 that requires a reply from the applicant.

Telephone inquiries concerning this decision should be directed to the undersigned at (571) 272-7253.

Monica A. Graves
Petitions Examiner
Office of Petitions

cc: **NICHOLAS F. PASCH**
1470 DE SOLO DRIVE
PACIFICA, CA 94044-4004

cc: **MITCHELL & CULP, PLLC**
ATTN: RICHARD M, MITCHELL, ESQ.
1001 MOREHEAD SQUARE DRIVE, SUITE 330
CHARLOTTE, NC 28203-4268

UNITED STATES PATENT AND TRADEMARK OFFICE

UNITED STATES DEPARTMENT OF COMMERCE
United States Patent and Trademark Office
Address: COMMISSIONER FOR PATENTS
P.O. Box 1450
Alexandria, Virginia 22313-1450
www.uspto.gov

PHILIP S. JOHNSON
JOHNSON & JOHNSON
ONE JOHNSON & JOHNSON PLAZA
NEW BRUNSWICK, NJ 08933-7003

Mail Date: 04/20/2010

Applicant	: Bradford S. Grant	: DECISION ON REQUEST FOR
Patent Number	: 7637394	: RECALCULATION of PATENT
Issue Date	: 12/29/2009	: TERM ADJUSTMENT IN VIEW
Appliction No	: 11/142,940	: OF WYETH AND NOTICE OF INTENT TO
Filed	: 06/02/2005	: ISSUE CERTIFICATE OF CORRECTION
		:

The Request for Recalculation is **GRANTED** to the extent indicated.

The patent term adjustment has been determined to be **115** days. The USPTO will *sua sponte* issue a certificate of correction reflecting the amount of PTA days determined by the recalculation.

Prior to the issuance of the certificate of correction, the USPTO will afford patentee an opportunity to be heard and request reconsideration. Accordingly, patentee has **one month or thirty (30) days**, whichever is longer, to file a request for reconsideration of this patent term adjustment calculation. See 35 U.S.C. 154(b)(3)(B)(ii) and 37 CFR 1.322(a)(4). No extensions of time will be granted under 37 CFR 1.136.

Patentee should use document code PET.OP if electronically filing a request for reconsideration of this patent term adjustment calculation. The patentee must also include the information required by 37 CFR 1.705(b)(2) and the fee required by 37 CFR 1.18(e). If patentee does not file a timely request for reconsideration of this patent term adjustment calculation including the information required by 37 CFR 1.705(b)(2) and the fee required by 37 CFR 1.18(e), the USPTO will issue a certificate of correction reflecting the PTA determination noted above.

Patentee should be aware that in order to preserve the right to review in the United States District Court for the District of Columbia of the USPTO patent term adjustment determination, patentee must ensure that he or she also take the steps required under 35 U.S.C. 154(b)(4)(A) in a timely manner. Nothing in the request for recalculation should be construed as providing an alternative time frame for commencing a civil action under 35 U.S.C. 154(b)(4)(A).

Any questions concerning this decision should be directed to the Office of Patent Legal Administration at 571-272-7702.

UNITED STATES PATENT AND TRADEMARK OFFICE

Commissioner for Patents
United States Patent and Trademark Office
P.O. Box 1450
Alexandria, VA 22313-1450
www.uspto.gov

MAILED

JUN 22 2006

Technology Center 2100

Paper No.

Daniel A. Rosenberg
DAVIS, BROWN, KOEHN,
SHORS & ROBERTS, P.C.
666 Walnut St., Suite 2500
Des Moines, Iowa 50309

In re Application of:
Wesley C. Sampson, et al.
Application No. 11/142,942
Filed: June 2, 2005
For: METHOD FOR THE RECORDING, IDENTIFICATION, SELECTION AND REPORTING NETWORK TRANSVERSAL PATHS

DECISION ON PETITION TO MAKE SPECIAL UNDER 37 C.F.R. ∋1.102(c) AND MPEP ∋708.02 (IV): APPLICANT'S AGE

This is a decision on the petition, filed October 12, 2005, under 37 C.F.R. ∋1.102(c) and M.P.E.P. ∋708.02(IV): Applicant's Age, to make the above-identified application special.

A grantable petition to make special under 37 C.F.R. ∋1.102 and in accordance with M.P.E.P. ∋708.02, Section IV must include a showing, as by a birth certificate or the applicant's statement, that the applicant is sixty five (65) years of age or more. No fee is required for this petition.

The petition includes a Declaration of Fact of establishing that applicant Mr. Wesley C. Sampson is sixty five (65) years of age or more. Accordingly, the petition is **GRANTED.**

The application is being forwarded to the examiner for expedited prosecution.

James R. Matthews

FM Vincent Trans
Special Programs Examiner
Technology Center 2100
Computer Architecture, Software, and Information Security
(571) 272-3613

UNITED STATES PATENT AND TRADEMARK OFFICE

Commissioner for Patents
United States Patent and Trademark Office
P.O. Box 1450
Alexandria, VA 22313-1450
www.uspto.gov

HOFFMANN & BARON, LLP
6900 JERICHO TURNPIKE
SYOSSET NY 11791

COPY MAILED

MAR 0 8 2006

OFFICE OF PETITIONS

In re Application of	:	
Crawford, Ross B.	:	DECISION ON PETITION
Application No. 11/142,958	:	TO WITHDRAW
Filed: June 2, 2005	:	FROM RECORD
Attorney Docket No. 1540-2	:	

This is a decision on the Request to Withdraw as attorney or agent of record under 37 C.F.R. § 1.36(b), filed November 14, 2005.

The request is **APPROVED**.

A grantable request to withdraw as attorney/agent of record must be signed by every attorney/agent seeking to withdraw or contain a clear indication that one attorney is signing on behalf of another/others. A request to withdraw will not be approved unless at least 30 (thirty) days would remain between the date of approval and the later of the expiration date of a time to file a response or the expiration date of the maximum time period which can be extended under 37 C.F.R. § 1.136(a).

The request was signed by Ronald J. Baron on behalf of all attorneys of record who are associated with Customer Number 23869.

All attorneys/agents associated with Customer Number 23869 have been withdrawn. Applicant is reminded that there is no attorney of record at this time.

The correspondence address of record remains unchanged.

Telephone inquires concerning this decision should be directed to Petitions Examiner Liana Chase at (571) 272-3206. All other inquires concerning either the examination or status of the application should be directed to the Technology Center.

David Bucci
Petitions Examiner
Office of Petitions

UNITED STATES PATENT AND TRADEMARK OFFICE

Commissioner for Patents
United States Patent and Trademark Office
P.O. Box 1450
Alexandria, VA 22313-1450
www.uspto.gov

MARK TERRY
950 PENINSULA CORPORATE CIRCLE
SUITE 3020
BOCA RATON FL 33487

MAILED

FEB 09 2009

OFFICE OF PETITIONS

In re Application of	:	
BENZRIHEM, Albert et al.	:	
Application No. 11/142,974	:	DECISION ON PETITION
Filed: June 02, 2005	:	TO WITHDRAW
Attorney Docket No. **Courteasy**	:	FROM RECORD
	:	

This is a decision on the Request to Withdraw as attorney or agent of record under 37 C.F.R. § 1.36(b), filed January 05, 2009.

The request is **APPROVED**.

A grantable request to withdraw as attorney/agent of record must be signed by every attorney/agent seeking to withdraw or contain a clear indication that one attorney is signing on behalf of another/others. The Office requires the practitioner(s) requesting withdrawal to certify that he, she, or they have: (1) given reasonable notice to the client, prior to the expiration of the response period, that the practitioner(s) intends to withdraw from employment; (2) delivered to the client or a duly authorized representative of the client all papers and property (including funds) to which the client is entitled; and (3) notified the client of any responses that may be due and the time frame within which the client must respond, pursuant 37 CFR 10.40(c).

The request was signed by Mark Terry, the sole attorney of record. Mark Terry has been withdrawn as attorney or agent of record. Applicant is reminded that there is no attorney of record at this time.

All future correspondence will be directed to the first named inventor Albert Benzrihem at the address indicated below.

Telephone inquiries concerning this decision should be directed to Tredelle Jackson at 571-272-2783.

Tredelle D. Jackson
Paralegal Specialist
Office of Petitions

cc: **ALBERT BENZRIHEM**
4132 SW 130TH AVENUE
DAVIE, FL 33330

cc: **HENRY SELDEN**
GALLERIA INTERNATIONAL BLDG
301 CLEMATIS ST., SUITE 201
WEST PALM BEACH FL 33401

UNITED STATES PATENT AND TRADEMARK OFFICE

Commissioner for Patents
United States Patent and Trademark Office
P.O. Box 1450
Alexandria, VA 22313-1450
www.uspto.gov

COPY MAILED

NOV 0 4 2009

OFFICE OF PETITIONS

James David Johnson, P.A.
401 East Las Olas Boulevard
Suite 130-290
Fort Lauderdale, FL 33301

In re Application of	:	
Brian David Udell, et al.	:	
Application No. 11/142,976	:	DECISION ON PETITION
Filed: June 2, 2005	:	TO WITHDRAW
Attorney Docket No. 46571-0004	:	FROM RECORD
	:	

This is a decision on the Request to Withdraw as attorney or agent of record under 37 C.F.R. § 1.36(b), filed September 24, 2009.

The request is **APPROVED**.

A grantable request to withdraw as attorney/agent of record must be signed by every attorney/agent seeking to withdraw or contain a clear indication that one attorney is signing on behalf of another/others. A request to withdraw will not be approved unless at least 30 (thirty) days would remain between the date of approval and the later of the expiration date of a time to file a response or the expiration date of the maximum time period which can be extended under 37 C.F.R. § 1.136(a).

The request was signed by James David Johnson, P.A. on behalf of all attorneys of record. All attorneys/agents have been withdrawn. Applicant is reminded that there is no attorney of record at this time.

All future correspondence will be directed to the first named inventor Brian David Udell at the address indicated below.

There is an outstanding Office action mailed June 18, 2009 that requires a reply from the applicant.

Telephone inquiries concerning this decision should be directed to Terri Johnson at 571-272-2991.

Terri Johnson

Terri Johnson
Petitions Examiner
Office of Petitions

cc: **Brian David Udell, MD**
401 East Las Olas Blvd.
Suite 1400
Ft. Lauderdale, FL 33301

UNITED STATES PATENT AND TRADEMARK OFFICE

UNITED STATES DEPARTMENT OF COMMERCE
United States Patent and Trademark Office
Address: COMMISSIONER FOR PATENTS
P.O. Box 1450
Alexandria, Virginia 22313-1450
www.uspto.gov

APPLICATION NUMBER	FILING OR 371(C) DATE	FIRST NAMED APPLICANT	ATTY. DOCKET NO./TITLE
11/142,976	06/02/2005	Brian David Udell	46571-0004

CONFIRMATION NO. 7657

POWER OF ATTORNEY NOTICE

43463
James David Johnson, P.A.
401 East Las Olas Boulevard
Suite 130-290
Fort Lauderdale, FL 33301

OC000000038604765

Date Mailed: 11/04/2009

NOTICE REGARDING CHANGE OF POWER OF ATTORNEY

This is in response to the Power of Attorney filed 09/24/2009.

- The withdrawal as attorney in this application has been accepted. Future correspondence will be mailed to the new address of record. 37 CFR 1.33.

/tsjohnson/

Office of Data Management, Application Assistance Unit (571) 272-4000, or (571) 272-4200, or 1-888-786-0101

UNITED STATES PATENT AND TRADEMARK OFFICE

Commissioner for Patents
United States Patent and Trademark Office
P.O. Box 1450
Alexandria, VA 22313-1450
www.uspto.gov

MAILED

SEP 01 2009

OFFICE OF PETITIONS

STITES & HARBISON PLLC
401 COMMERCE STREET
SUITE 800
NASHVILLE TN 37219

In re Application of	:	
Phillip G. PITTS et al.	:	
Application No. 11/142,983	:	DECISION ON PETITION
Filed: June 02, 2005	:	
Attorney Docket No. 11515N/020282DIV	:	

This is a decision on the petition under the unintentional provisions of 37 CFR 1.137(b), filed July 22, 2009, to revive the above-identified application.

The petition is **GRANTED**.

The application became abandoned for failure to timely file a reply within two (2) of the Notice of Appeal filed September 25, 2008. A five (5) month extension of time under the provisions of 37 CFR 1.136(a) was obtained. The proposed reply required for consideration of a petition to revive must be an appeal brief under 37 CFR 41.37 and the appeal brief fee required by 37 CFR 41.20(b)(2), a Request for Continued Examination and submission (37 CFR 1.114), or the filing of a continuing application under 37 CFR 1.53(b). Accordingly, the date of abandonment of this application is April 26, 2009.

The petition satisfies the requirements of 37 CFR 1.137(b) in that petitioner has supplied (1) the reply in the form of a Request for Continued Examination (RCE) and fee of $405.00, and the submission required by 37 CFR 1.114; (2) the petition fee of $810.00; and (3) a proper statement of unintentional delay. Accordingly, the reply to the Notice of Appeal filed September 25, 2008 is accepted as having been unintentionally delayed.

An extension of time under 37 CFR 1.136 must be filed prior to the expiration of the maximum extendable period for reply. *See* In re Application of S., 8 USPQ2d 1630, 1631 (Comm'r Pats. 1988). Since the $1,175.00 extension of time fee submitted on May 26, 2009 was subsequent to the maximum extendable period for reply, this fee is unnecessary and will be credited to petitioner's deposit account.

Telephone inquiries concerning this decision should be directed to the undersigned at (571) 272-4231.

This application is being referred to Technology Center AU 1793 for processing of the RCE and for appropriate action by the Examiner in the normal course of business on the amendment submitted in accordance with 37 CFR 1.114.

Michelle R. Eason
Paralegal Specialist
Office of Petition

UNITED STATES PATENT AND TRADEMARK OFFICE

UNITED STATES DEPARTMENT OF COMMERCE
United States Patent and Trademark Office
Address: COMMISSIONER FOR PATENTS
P.O. Box 1450
Alexandria, Virginia 22313-1450
www.uspto.gov

KNOBBE MARTENS OLSON & BEAR LLP
2040 MAIN STREET
FOURTEENTH FLOOR
IRVINE, CA 92614

Mail Date: 04/20/2010

Applicant	: Michael L. Green	: DECISION ON REQUEST FOR
Patent Number	: 7585311	: RECALCULATION of PATENT
Issue Date	: 09/08/2009	: TERM ADJUSTMENT IN VIEW
Appliction No	: 11/143,007	: OF WYETH AND NOTICE OF INTENT TO
Filed	: 06/01/2005	: ISSUE CERTIFICATE OF CORRECTION
		:

The Request for Recalculation is **GRANTED** to the extent indicated.

The patent term adjustment has been determined to be **1126** days. The USPTO will *sua sponte* issue a certificate of correction reflecting the amount of PTA days determined by the recalculation.

Prior to the issuance of the certificate of correction, the USPTO will afford patentee an opportunity to be heard and request reconsideration. Accordingly, patentee has **one month or thirty (30) days**, whichever is longer, to file a request for reconsideration of this patent term adjustment calculation. See 35 U.S.C. 154(b)(3)(B)(ii) and 37 CFR 1.322(a)(4). No extensions of time will be granted under 37 CFR 1.136.

Patentee should use document code PET.OP if electronically filing a request for reconsideration of this patent term adjustment calculation. The patentee must also include the information required by 37 CFR 1.705(b)(2) and the fee required by 37 CFR 1.18(e). If patentee does not file a timely request for reconsideration of this patent term adjustment calculation including the information required by 37 CFR 1.705(b)(2) and the fee required by 37 CFR 1.18(e), the USPTO will issue a certificate of correction reflecting the PTA determination noted above.

Patentee should be aware that in order to preserve the right to review in the United States District Court for the District of Columbia of the USPTO patent term adjustment determination, patentee must ensure that he or she also take the steps required under 35 U.S.C. 154(b)(4)(A) in a timely manner. Nothing in the request for recalculation should be construed as providing an alternative time frame for commencing a civil action under 35 U.S.C. 154(b)(4)(A).

Any questions concerning this decision should be directed to the Office of Patent Legal Administration at 571-272-7702.

UNITED STATES PATENT AND TRADEMARK OFFICE

Commissioner for Patents
United States Patent and Trademark Office
P.O. Box 1450
Alexandria, VA 22313-1450
www.uspto.gov

FINNEGAN, HENDERSON, FARABOW
GARRETT & DUNNER, LLP
901 NEW YORK AVENUE, NW
WASHINGTON, DC 20001-4413

MAILED

AUG 19 2009

OFFICE OF PETITIONS

In re Application of	:	
Jason Mo	:	
Application No. 11/143,010	:	DECISION ON PETITION
Filed: June 1, 2005	:	TO WITHDRAW FROM
Attorney Docket No. 9145.0025-00	:	RECORD

This is a decision on the Request to Withdraw as attorney or agent of record under 37 CFR § 1.36(b), filed July 9, 2009.

The request is **NOT APPROVED**.

The request cannot be approved because practitioner/practitioners associated with Customer Number 22852 requesting the withdrawal have not certified that they have (1) given reasonable notice to the client, prior to the expiration of the reply period, that the practitioner(s) intends to withdraw from employment; (2) delivered to the client or duly authorized representative of the client papers and property (including funds) to which the client is entitled; and (3) notified the client of any responses that may be due and the time frame within which the client must respond. The failure to do so may subject the practitioner to discipline[1]. *See USPTO Form No. PTO/SB/83.*

It is noted that the assignee of record has requested that the application be transferred to another law firm. However, the present request cannot be approved since the assignee has failed to properly intervene in the above-identified application by filing the required Statement under 37 CFR 3.73(b)[2]. *See USPTO Form No. PTO/SB/96.*

Additionally, the Office will also no longer change the correspondence address to that of a new practitioner unless the Request is accompanied by a power of attorney to a new practitioner (e.g., Form PTO/SB/82).

---

[1] Practitioner should note that false certification may violate a practitioners' duty under 37 CFR 10.23(b)(4) and (b)(5).

[2] In order to request or take action in a patent matter, the assignee must establish its ownership of the patent to the satisfaction of the Director. In this regard, a Statement under 37 CFR 3.73(b) must have either: (i) documentary evidence of a chain of title from the original owner to the assignee (*e.g.*, copy of an executed assignment), and a statement affirming that the documentary evidence of the chain of title from the original owner to the assignee was or concurrently is being submitted for recordation pursuant to § 3.11; or (ii) a statement specifying where documentary evidence of a chain of title from the original owner to the assignee is recorded in the assignment records of the Office (*e.g.*, reel and frame number).

All future communications from the Office will continue to be directed to the above-listed address until otherwise notified by the applicant.

Telephone inquiries concerning this decision should be directed to undersigned at (571) 272-3226. All other inquiries concerning the examination or status of this application should be directed to the Technology Center.

Andrea Smith
Petitions Examiner
Office of Petitions

cc: HAYNES AND BOONE, LLP
IP SECTION
2323 VICTORY AVENUE
SUITE 700
DALLAS, TX 75219

UNITED STATES PATENT AND TRADEMARK OFFICE

Commissioner for Patents
United States Patent and Trademark Office
P.O. Box 1450
Alexandria, VA 22313-1450
www.uspto.gov

HAYNES AND BOONE, LLP
IP SECTION
2323 VICTORY AVENUE
SUITE 700
DALLAS, TX 75219

COPY MAILED

NOV 27 2009

OFFICE OF PETITIONS

In re Application of	:	
Jason Mo	:	
Application No. 11/143,010	:	DECISION ON PETITION
Filed: June 1, 2005	:	TO WITHDRAW FROM
Attorney Docket No. 9145.0025-00	:	RECORD

This is a decision on the renewed Request to Withdraw as attorney or agent of record under 37 CFR §§ 1.36(b) or 10.40, filed October 6, 2009.

The request is **NOT APPROVED AS MOOT**.

A review of the file record indicates that the power of attorney to attorneys/agents associated with Customer Number 22852 has been revoked by the assignee of the patent application on November 12, 2009. Accordingly, the request to withdraw under 37 CFR § 1.36(b) is moot.

It is noted that the assignee's statement under 37 CFR 3.73(b) did not include the language that "[t]he undersigned (whose title is supplied below) is authorized to act on behalf of the assignee". However, the Office has acknowledged and will construe the title "VP, General Counsel" associated with the person who signed the power of attorney as having apparent authority to sign on behalf of the assignee. *See MPEP § 324(V)(A)*.

All future communications from the Office will be directed to the above-listed address until otherwise notified by the applicant.

This application is being referred to Technology Center Art Unit 2477 for review of the response filed on September 11, 2009.

Telephone inquiries concerning this decision should be directed to undersigned at (571) 272-3226. All other inquiries concerning the examination or status of this application should be directed to the Technology Center.

Andrea Smith
Petitions Examiner
Office of Petitions

cc: FINNEGAN, HENDERSON, FARABOW
GARRETT & DUNNER, LLP
901 NEW YORK AVENUE, NW
WASHINGTON, DC 20001-4413

UNITED STATES PATENT AND TRADEMARK OFFICE

UNITED STATES DEPARTMENT OF COMMERCE
United States Patent and Trademark Office
Address: COMMISSIONER FOR PATENTS
P.O. Box 1450
Alexandria, Virginia 22313-1450
www.uspto.gov

Snell & Wilmer L.L.P. (AMEX)
ONE ARIZONA CENTER
400 E. VAN BUREN STREET
PHOENIX, AZ 85004-2202

Mail Date: 04/26/2010

Applicant	: Jeffrey Stuart Horwitz	: DECISION ON REQUEST FOR
Patent Number	: 7594222	: RECALCULATION of PATENT
Issue Date	: 09/22/2009	: TERM ADJUSTMENT IN VIEW
Application No	: 11/143,016	: OF WYETH AND NOTICE OF INTENT TO
Filed	: 06/01/2005	: ISSUE CERTIFICATE OF CORRECTION
		:

The Request for Recalculation is **GRANTED** to the extent indicated.

The patent term adjustment has been determined to be **1148** days. The USPTO will *sua sponte* issue a certificate of correction reflecting the amount of PTA days determined by the recalculation.

Prior to the issuance of the certificate of correction, the USPTO will afford patentee an opportunity to be heard and request reconsideration. Accordingly, patentee has **one month or thirty (30) days**, whichever is longer, to file a request for reconsideration of this patent term adjustment calculation. See 35 U.S.C. 154(b)(3)(B)(ii) and 37 CFR 1.322(a)(4). No extensions of time will be granted under 37 CFR 1.136.

Patentee should use document code PET.OP if electronically filing a request for reconsideration of this patent term adjustment calculation. The patentee must also include the information required by 37 CFR 1.705(b)(2) and the fee required by 37 CFR 1.18(e). If patentee does not file a timely request for reconsideration of this patent term adjustment calculation including the information required by 37 CFR 1.705(b)(2) and the fee required by 37 CFR 1.18(e), the USPTO will issue a certificate of correction reflecting the PTA determination noted above.

Patentee should be aware that in order to preserve the right to review in the United States District Court for the District of Columbia of the USPTO patent term adjustment determination, patentee must ensure that he or she also take the steps required under 35 U.S.C. 154(b)(4)(A) in a timely manner. Nothing in the request for recalculation should be construed as providing an alternative time frame for commencing a civil action under 35 U.S.C. 154(b)(4)(A).

Any questions concerning this decision should be directed to the Office of Patent Legal Administration at 571-272-7702.

UNITED STATES PATENT AND TRADEMARK OFFICE

UNITED STATES DEPARTMENT OF COMMERCE
United States Patent and Trademark Office
Address: COMMISSIONER FOR PATENTS
P.O. Box 1450
Alexandria, Virginia 22313-1450
www.uspto.gov

APPLICATION NO.	FILING DATE	FIRST NAMED INVENTOR	ATTORNEY DOCKET NO.	CONFIRMATION NO.
11/143,025	05/31/2005	In Kyu Chun	OPP-GZ-2005-0054-US-00	8124

36872 7590 09/10/2009
THE LAW OFFICES OF ANDREW D. FORTNEY, PH.D., P.C.
215 W FALLBROOK AVE SUITE 203
FRESNO, CA 93711

EXAMINER
NGUYEN, THANH T

ART UNIT	PAPER NUMBER
2893	

MAIL DATE	DELIVERY MODE
09/10/2009	PAPER

Please find below and/or attached an Office communication concerning this application or proceeding.

The time period for reply, if any, is set in the attached communication.

UNITED STATES PATENT AND TRADEMARK OFFICE

Commissioner for Patents
United States Patent and Trademark Office
P.O. Box 1450
Alexandria, VA 22313-1450
www.uspto.gov

Andrew D. Fortney
THE LAW OFFICES OF ANDREW D. FORTNEY
401 W. Fallbrook Avenue, Suite 204
Fresno, California 93711

In re Application of:
CHUN
Serial No.: 11/143,025
Filed: May 31, 2005
Attorney Docket No.: **OPP-GZ-2005-0054-US-00**

DECISION ON PETITION
TO WITHDRAW HOLDING
OF FINALITY

This is a decision on the petition, filed March 26, 2009, requesting that the finality of the Office action dated September 26, 2008 be withdrawn.

The petition is **dismissed.**

In the Office action of September 26, 2008, the Examiner inadvertently checked both the non-final rejection box and the final rejection box on the Office Action Summary form. In the Office action itself, there were no statements that the Office action was a final rejection. Also, the Petitioner confirms that during an interview with the Examiner on October 2, 2008, the Examiner confirmed that the Office action was a non-final rejection.

Since it has previously been clarified on the record that the Office action of September 26, 2008 is a non-final rejection, this petition is moot and hereby dismissed.

The application will be forwarded to the Examiner for prompt consideration of the amendment filed on March 26, 2009. No further response is required from the applicant at this time.

Inquiries regarding this decision should be directed to Davienne Monbleau, Supervisory Patent Examiner of Art Unit 2893, at (571) 272-1945.

Richard Seidel, Director
Technology Center 2800
Semiconductors, Electrical and Optical
Systems and Components

UNITED STATES PATENT AND TRADEMARK OFFICE

Commissioner for Patents
United States Patent and Trademark Office
P.O. Box 1450
Alexandria, VA 22313-1450
www.uspto.gov

HOWREY LLP-HN
C/O IP DOCKETING DEPARTMENT
2941 FAIRVIEW PARK DRIVE, SUITE 200
FALLS CHURCH VA 22042-7195

MAILED

JAN 19 2010

OFFICE OF PETITIONS

In re Application.	:	
Maldonado et al.	:	DECISION ON PETITION
Application No. 11/143,035	:	TO WITHDRAW
Filed: June 2, 2005	:	FROM RECORD
Attorney Docket No. 13608.0013.NPUS02	:	

This is a decision on the Request to Withdraw as attorney or agent of record under 37 C.F.R. § 1.36(b) filed November 17, 2009, which is being treated as a request to withdraw from employment in a proceeding before the Office under 37 C.F.R. § 10.40.

The request is **DISMISSED**.

A review of the file record indicates that Howery LLP-HN was not appointed power of attorney in this patent application. Accordingly, the request to withdraw under 37 C.F.R. § 1.36(b) is not applicable.

There is an outstanding Final Office action mailed October 29, 2009, that requires a reply from the applicant.

Telephone inquires concerning this decision should be directed to the undersigned at 571-272-6059.

Alicia Kelley
Petitions Examiner
Office of Petitions

UNITED STATES PATENT AND TRADEMARK OFFICE

Commissioner for Patents
United States Patent and Trademark Office
P.O. Box 1450
Alexandria, VA 22313-1450
www.uspto.gov

HOWREY LLP-HN
C/O IP DOCKETING DEPARTMENT
2941 FAIRVIEW PARK DRIVE, SUITE 200
FALLS CHURCH, VA 22042-7195

COPY MAILED
MAR 04 2010

In re Application of	:	
Maldonado et al.	:	DECISION ON PETITION
Application No. 11/143,035	:	TO WITHDRAW
Filed: June 2, 2005	:	FROM RECORD
Attorney Docket: 13608.0013.NPUS02 IGLO:01	:	

This is a decision on the Request to Withdraw as attorney or agent of record under 37 C.F.R. § 1.36(b), filed December 23, 2009.

The request is **APPROVED**.

A grantable request to withdraw as attorney/agent of record must be signed by every attorney/agent seeking to withdraw or contain a clear indication that one attorney is signing on behalf of another/others. The Office will require the practitioner(s) to certify that he, she or they have: (1) given reasonable notice to the client, prior to the expiration of the reply period, which the practitioner(s) intends to withdraw from employment; (2) delivered to the client or a duly authorized representative of the client all papers and property (including funds) to which the client is entitled; and (3) notified the client of any replies that may be due and the time frame within which the client must respond, pursuant to 37 CFR 10.40 (c).

The request was signed by Gregg A. Duffey on behalf of all practitioners of record associated with Customer Number 23369.

Customer Number 23369 has been withdrawn as attorney of record. Applicant is reminded that there is no attorney of record at this time.

The correspondence address of record has been changed and the new correspondence address is the address indicated below.

There is an outstanding Office action mailed October 29, 2009 requires a reply from the applicant.

Telephone inquires concerning this decision should be directed to the undersigned at (571) 272-6059. All other inquires concerning either the examination or status of the application should be directed to the Technology Center.

Alicia Kelley
Petitions Examiner
Office of Petitions

cc: IGLOO PRODUCT CORP.
NICOLE FIORI
777 IGLOO ROAD
KATY, TX 77494

UNITED STATES PATENT AND TRADEMARK OFFICE

UNITED STATES DEPARTMENT OF COMMERCE
United States Patent and Trademark Office
Address: COMMISSIONER FOR PATENTS
P.O. Box 1450
Alexandria, Virginia 22313-1450
www.uspto.gov

APPLICATION NUMBER	FILING OR 371(C) DATE	FIRST NAMED APPLICANT	ATTY. DOCKET NO./TITLE
11/143,035	06/02/2005	John Maldonado	13608.0013.NPUS02 IGLO:01

CONFIRMATION NO. 8122

POWER OF ATTORNEY NOTICE

OC000000040358359

23369
HOWREY LLP-HN
C/O IP DOCKETING DEPARTMENT
2941 FAIRVIEW PARK DRIVE, SUITE 200
FALLS CHURCH, VA 22042-7195

Date Mailed: 03/01/2010

NOTICE REGARDING CHANGE OF POWER OF ATTORNEY

This is in response to the Power of Attorney filed 01/28/2010.

- The withdrawal as attorney in this application has been accepted. Future correspondence will be mailed to the new address of record. 37 CFR 1.33.

/atkelley/

Office of Data Management, Application Assistance Unit (571) 272-4000, or (571) 272-4200, or 1-888-786-0101

UNITED STATES PATENT AND TRADEMARK OFFICE

UNITED STATES DEPARTMENT OF COMMERCE
United States Patent and Trademark Office
Address: COMMISSIONER FOR PATENTS
P.O. Box 1450
Alexandria, Virginia 22313-1450
www.uspto.gov

TEXAS INSTRUMENTS INCORPORATED
P O BOX 655474, M/S 3999
DALLAS, TX 75265

Mail Date: 04/20/2010

Applicant	: Theodore W. Houston	: DECISION ON REQUEST FOR
Patent Number	: 7570527	: RECALCULATION of PATENT
Issue Date	: 08/04/2009	: TERM ADJUSTMENT IN VIEW
Appliction No	: 11/143,038	: OF WYETH AND NOTICE OF INTENT TO
Filed	: 06/02/2005	: ISSUE CERTIFICATE OF CORRECTION
		:

The Request for Recalculation is **GRANTED** to the extent indicated.

The patent term adjustment has been determined to be **209** days. The USPTO will *sua sponte* issue a certificate of correction reflecting the amount of PTA days determined by the recalculation.

Prior to the issuance of the certificate of correction, the USPTO will afford patentee an opportunity to be heard and request reconsideration. Accordingly, patentee has **one month or thirty (30) days**, whichever is longer, to file a request for reconsideration of this patent term adjustment calculation. See 35 U.S.C. 154(b)(3)(B)(ii) and 37 CFR 1.322(a)(4). No extensions of time will be granted under 37 CFR 1.136.

Patentee should use document code PET.OP if electronically filing a request for reconsideration of this patent term adjustment calculation. The patentee must also include the information required by 37 CFR 1.705(b)(2) and the fee required by 37 CFR 1.18(e). If patentee does not file a timely request for reconsideration of this patent term adjustment calculation including the information required by 37 CFR 1.705(b)(2) and the fee required by 37 CFR 1.18(e), the USPTO will issue a certificate of correction reflecting the PTA determination noted above.

Patentee should be aware that in order to preserve the right to review in the United States District Court for the District of Columbia of the USPTO patent term adjustment determination, patentee must ensure that he or she also take the steps required under 35 U.S.C. 154(b)(4)(A) in a timely manner. Nothing in the request for recalculation should be construed as providing an alternative time frame for commencing a civil action under 35 U.S.C. 154(b)(4)(A).

Any questions concerning this decision should be directed to the Office of Patent Legal Administration at 571-272-7702.

UNITED STATES PATENT AND TRADEMARK OFFICE

Commissioner for Patents
United States Patent and Trademark Office
P.O. Box 1450
Alexandria, VA 22313-1450
www.uspto.gov

WITHROW & TERRANOVA, P.L.L.C.
P.O. BOX 1287
CARY NC 27512

COPY MAILED

SEP 27 2005

OFFICE OF PETITIONS

In re Application of
Jesse Chen, Patrick Vandenameele, Steven Thoen, Alex Zenkin, Pengfei Zhang, Peter Hanson, Dmitri Varsanofiev, and Peter Cnudde
Application No.11/143,042
Filed: June 2, 2005
Attorney Docket No. 2867-332
Title of Invention: I/Q MISMATCH CALIBRATION OF DIRECT CONVERSION RECEIVERS USING RADIO FREQUENCY NOISE

DECISION GRANTING STATUS UNDER 37 CFR 1.47(A)

This is in response to the petition under 37 CFR 1.47(a) filed September 13, 2005.

The petition is GRANTED.

Petitioner has shown that non-signing inventors Vandenameele and Thoen have not been located. The efforts outlined by petitioner demonstrate diligent effort was used to attempt to locate non-signing inventors Vandenameele and Thoen.

The above-identified application and papers have been reviewed and found in compliance with 37 CFR 1.47(a). This application is hereby accorded Rule 1.47(a) status.

As provided in Rule 1.47(c), this Office will forward notice of this application's filing to the non-signing inventor at the address given in the petition. Notice of the filing of this application will also be published in the Official Gazette.

After this decision is mailed, the application will be forwarded to the Office of Initial Patent Examination for further processing.

Telephone inquiries regarding this communication should be directed to the undersigned at (571) 272-3215.

Charlema R. Grant

Charlema R. Grant
Petitions Attorney
Office of Petitions

UNITED STATES PATENT AND TRADEMARK OFFICE

Commissioner for Patents
United States Patent and Trademark Office
P.O. Box 1450
Alexandria, VA 22313-1450
www.uspto.gov

Patrick Vandenameele
Baanakkerweg 3
Bertem 3060
Belgium

In re Application of
Jesse Chen, Patrick Vandenameele, Steven Thoen, Alex Zenkin, Pengfei Zhang, Peter Hanson, Dmitri Varsanofiev, and Peter Cnudde
Application No.11/143,042
Filed: June 2, 2005
Attorney Docket No. 2867-332
Title of Invention: I/Q MISMATCH CALIBRATION OF DIRECT CONVERSION RECEIVERS USING RADIO FREQUENCY NOISE

: LETTER

COPY MAILED

SEP 27 2005

OFFICE OF PETITIONS

Dear Mr. Vandenameele :

You are named as a joint inventor in the above-identified United States patent application filed under the provisions of 35 U.S.C. 116 (United States Code) and 37 C.F.R. § 1.47(a), Rules of Practice in Patent Cases. Should a patent be granted on the application you will be designated therein as a joint inventor.

As a named inventor you are entitled to inspect any paper in the file wrapper of the application, order copies of all or any part thereof (at a prepaid cost as per 37 C.F.R. § 1.19) or make your position of record in the application. Alternatively, you may arrange to do any of the preceding through a registered patent attorney or agent presenting written authorization from you. If you care to join the application, applicant (see below) would presumably assist you. Joining in the application would entail the filing of an appropriate oath or declaration by you pursuant to 37 C.F.R. § 1.63.

Telephone inquiries regarding this communication should be directed to Petitions Attorney Charlema R. Grant at (571) 272-3215. Requests for information regarding your application should be directed to the File Information Unit at (703) 308-2733. Information regarding how to pay for and order a copy of the application, or a specific paper in the application, should be directed to Certification Division at (703) 308-9726 or 1-800-972-6382 (outside the Washington D.C. area).

Charlema R. Grant

Charlema R. Grant
Petitions Attorney
Office of Petitions

WITHROW & TERRANOVA, P.L.L.C.
P.O. BOX 1287
CARY NC 27512
ATTN: BENJAMIN S. WITHROW

UNITED STATES PATENT AND TRADEMARK OFFICE

Commissioner for Patents
United States Patent and Trademark Office
P.O. Box 1450
Alexandria, VA 22313-1450
www.uspto.gov

Steven Thoen
Brusselsestraat 154 Bus 1
Leven 3000
Belgium

In re Application of
Jesse Chen, Patrick Vandenameele, Steven Thoen, Alex Zenkin, Pengfei Zhang, Peter Hanson, Dmitri Varsanofiev, and Peter Cnudde
Application No.11/143,042
Filed: June 2, 2005
Attorney Docket No. 2867-332
Title of Invention: I/Q MISMATCH CALIBRATION OF DIRECT CONVERSION RECEIVERS USING RADIO FREQUENCY NOISE

: LETTER

COPY MAILED

SEP 27 2005

OFFICE OF PETITIONS

Dear Mr. Thoen :

You are named as a joint inventor in the above-identified United States patent application filed under the provisions of 35 U.S.C. 116 (United States Code) and 37 C.F.R. § 1.47(a), Rules of Practice in Patent Cases. Should a patent be granted on the application you will be designated therein as a joint inventor.

As a named inventor you are entitled to inspect any paper in the file wrapper of the application, order copies of all or any part thereof (at a prepaid cost as per 37 C.F.R. § 1.19) or make your position of record in the application. Alternatively, you may arrange to do any of the preceding through a registered patent attorney or agent presenting written authorization from you. If you care to join the application, applicant (see below) would presumably assist you. Joining in the application would entail the filing of an appropriate oath or declaration by you pursuant to 37 C.F.R. § 1.63.

Telephone inquiries regarding this communication should be directed to Petitions Attorney Charlema R. Grant at (571) 272-3215. Requests for information regarding your application should be directed to the File Information Unit at (703) 308-2733. Information regarding how to pay for and order a copy of the application, or a specific paper in the application, should be directed to Certification Division at (703) 308-9726 or 1-800-972-6382 (outside the Washington D.C. area).

Charlema R. Grant

Charlema R. Grant
Petitions Attorney
Office of Petitions

WITHROW & TERRANOVA, P.L.L.C.
P.O. BOX 1287
CARY NC 27512
ATTN: BENJAMIN S. WITHROW

UNITED STATES PATENT AND TRADEMARK OFFICE

COMMISSIONER FOR PATENTS
UNITED STATES PATENT AND TRADEMARK OFFICE
P.O. BOX 1450
ALEXANDRIA, VA 22313-1450
www.uspto.gov

JEFFREY ANDERSON
PO BOX 590262
ORLANDO FL 32859

MAILED

JUN 15 2009

OFFICE OF PETITIONS

Applicant: Anderson
Application No. 11/143,048
Filed: June 2, 2005
For: SEX AID INCORPORATING MEMBRANE EDGES
Pub. No.: US 2006/0272648 A1
Pub. Date: December 7, 2006

: Decision on Petition

This is a decision in response to the papers received on May 18, 2009 and May 20, 2009, which are being treated as a request for information. Applicant is requesting that the Office withdraw application Publication No. 2006/0272648 A1 from publication or in the alternative modify the publication to change the name to Applicant's first initial and last name.

Applicant's request is essentially a petition for suspension or waiver of the rules under 37 CFR 1.183, which requires a petition fee (currently $400). The rules and statutory provisions governing the operations of the USPTO require payment of a fee on filing each petition. *See* 35 U.S.C. § 41(a)(7). The petition fee $400 required for a petition under 37 CFR 1.183 has not been paid.

Applicant's request cannot be granted.

35 U.S.C. 122(b) requires the United States Patent and Trademark Office to publish utility and plant applications filed on or after November 29, 2000, unless, on filing, applicant requested nonpublication with the required certification. The statute also permits the Office to publish applications filed before November 29, 2000, when applicant requests publication of such an application.

To avoid pre-grant publication of a patent application, applicant must certify that the invention disclosed in the application has not and will not be the subject of an application filed in another country, or under a multilateral international agreement, that requires publication of applications 18 months after filing. See 35 U.S.C. 122(b)(2)(B)(I) and 37 CFR 1.213. Applicant did not file the application with a nonpublication request in compliance with the statute and the application published on December 7, 2006 as US 2006/0272648 A1.

The Office has no statutory authority to withdraw a properly published patent application publication. The Pre-Grant Publication numbers listed as withdrawn subsequent to publication

on the USPTO website at the link noted by Applicant are for applications which were improperly published. The USPTO did not have the statutory authority to publish the applications, thus the patent application publications were withdrawn. Applicant did not file the application with a nonpublication request and the application is not subject to a secrecy order, so therefore the application was properly published in accordance with established procedure.

The Office has no statutory authority to correct, redact or simply abbreviate a name on a properly published patent application publication. In accordance with Office procedures, the names of the inventors and a correspondence address are published on the patent application publications.

To facilitate matching papers to an application, Office procedures require that all correspondence related to a national patent application already filed with the U.S. Patent and Trademark Office must include the identification of the application number or the serial number and the filing date assigned to the application by the Office. It would be of great assistance to the Office if all incoming papers pertaining to a filed application carried the following items:

(A) Application number (checked for accuracy, including series code and serial no.).
(B) Art Unit number (copied from most recent Office communication).
(C) Filing date.
(D) Name of the examiner who prepared the most recent Office action.
(E) Title of invention.
(F) Confirmation number (see MPEP § 503).

Telephone inquiries regarding this communication should be directed the undersigned at (571) 272-7709.

Mark Polutta
Senior Legal Advisor
Office of Patent Legal Administration
Office of the Deputy Commissioner
for Patent Examination Policy

UNITED STATES PATENT AND TRADEMARK OFFICE

UNITED STATES DEPARTMENT OF COMMERCE
United States Patent and Trademark Office
Address: COMMISSIONER FOR PATENTS
P.O. Box 1450
Alexandria, Virginia 22313-1450
www.uspto.gov

APPLICATION NO.	FILING DATE	FIRST NAMED INVENTOR	ATTORNEY DOCKET NO.	CONFIRMATION NO.
11/143,048	06/02/2005	Jeffrey James Anderson		8790

7590 06/26/2009
JEFFREY ANDERSON
PO BOX 590262
ORLANDO, FL 32859

EXAMINER
JACKSON, BRANDON LEE

ART UNIT	PAPER NUMBER
3772	

MAIL DATE	DELIVERY MODE
06/26/2009	PAPER

DECISION DISMISSING PETITION UNDER 37 CFR 1.138(c)

The declaration of express abandonment will not be recognized

This is in response to the petition under 37 CFR 1.138(c), for express abandonment to avoid publication of the above-identified application.

The petition is dismissed.

The express abandonment will **not** be recognized for the reason(s) indicated below:

1. ☑ The petition under 37 CFR 1.138(c) was not filed in sufficient time to permit the appropriate officials to recognize the abandonment and remove the application from the publication process.
2. ☐ The petition was not signed by a party authorized by 37 CFR 1.33(b)(1), (3) or (4).
3. ☐ The Application was published in compliance with 35 U.S.C. 122(b), and it is available on the USPTO web site at http://www.uspto.gov/patft/index.html.
4. ☐ Petition fee was not paid.

The application **has/will be published** as scheduled.

Telephone inquiries should be directed to the Office of Data Management at (571) 272-4200.

Zalitus Buchanan

Patent Publication Branch
Office of Data Management

FORM PET650D (Rev. 08/07)

UNITED STATES PATENT AND TRADEMARK OFFICE

Commissioner for Patents
United States Patent and Trademark Office
P.O. Box 1450
Alexandria, VA 22313-1450
www.uspto.gov

MAILED

OCT 26 2009

OFFICE OF PETITIONS

PERKINS COIE LLP
P.O. BOX 1208
SEATTLE WA 98111-1208

In re Application of
Jeffery James Anderson
Application No. 11/143,048
Filed: June 2, 2005
Attorney Docket No. **71739-8001.US01**

DECISION ON PETITION

This is a decision on the petition under 37 CFR 1.182, filed August 25, 2009, requesting that the Office modify and reprint the application Publication No. 2006/0272648 so as change the manner in which the inventor is identified and change the address associated with the application to that of applicant's representative.

The petition is **DISMISSED AS MOOT**.

A review of the application file history reveals that a decision on petition was mailed June 15, 2009, which essentially addressed the issues iterated in the instant petition. The petition decision of June 15, 2009, concluded that it would be improper to correct, redact, or abbreviate a name on a properly published patent application publication. It follows that it would be improper to change the address associated with the application on a properly published patent application. The instant petition under 37 CFR 1.182 has presented no additional information that would allow the undersigned to reach a different conclusion. The petition is dismissed accordingly.

Petitioner may wish to file a petition under 37 CFR 1.183 to waive the requirements of the relevant rules. It is noted that petitioner was informed of the option to file a petition under 37 CFR 1.183 in the petition decision mailed June 15, 2009.

A copy of the petition decision mailed June 15, 2009, is attached for petitioner's reference.

Further correspondence with respect to this matter should be addressed as follows:

By Mail: Mail Stop PETITION
Commissioner for Patents
P. O. Box 1450
Alexandria, VA 22313-1450

By facsimile: **(571) 273-8300**
Attn: Office of Petitions

Telephone inquiries concerning this decision should be directed to the undersigned at (571) 272-3222.

Kenya A. McLaughlin
Petitions Attorney
Office of Petitions

Enclosure: Petition Decision mailed June 15, 2009--COPY

COPY

UNITED STATES PATENT AND TRADEMARK OFFICE

COMMISSIONER FOR PATENTS
UNITED STATES PATENT AND TRADEMARK OFFICE
P.O. BOX 1450
ALEXANDRIA, VA 22313-1450
www.uspto.gov

JEFFREY ANDERSON
PO BOX 590262
ORLANDO FL 32859

MAILED

JUN 15 2009

OFFICE OF PETITIONS

Applicant: Anderson	:
Application No. 11/143,048	:
Filed: June 2, 2005	: Decision on
For: SEX AID INCORPORATING	: Petition
MEMBRANE EDGES	:
Pub. No.: US 2006/0272648 A1	:
Pub. Date: December 7, 2006	:

This is a decision in response to the papers received on May 18, 2009 and May 20, 2009, which are being treated as a request for information. Applicant is requesting that the Office withdraw application Publication No. 2006/0272648 A1 from publication or in the alternative modify the publication to change the name to Applicant's first initial and last name.

Applicant's request is essentially a petition for suspension or waiver of the rules under 37 CFR 1.183, which requires a petition fee (currently $400). The rules and statutory provisions governing the operations of the USPTO require payment of a fee on filing each petition. *See* 35 U.S.C. § 41(a)(7). The petition fee $400 required for a petition under 37 CFR 1.183 has not been paid.

Applicant's request cannot be granted.

35 U.S.C. 122(b) requires the United States Patent and Trademark Office to publish utility and plant applications filed on or after November 29, 2000, unless, on filing, applicant requested nonpublication with the required certification. The statute also permits the Office to publish applications filed before November 29, 2000, when applicant requests publication of such an application.

To avoid pre-grant publication of a patent application, applicant must certify that the invention disclosed in the application has not and will not be the subject of an application filed in another country, or under a multilateral international agreement, that requires publication of applications 18 months after filing. See 35 U.S.C. 122(b)(2)(B)(I) and 37 CFR 1.213. Applicant did not file the application with a nonpublication request in compliance with the statute and the application published on December 7, 2006 as US 2006/0272648 A1.

The Office has no statutory authority to withdraw a properly published patent application publication. The Pre-Grant Publication numbers listed as withdrawn subsequent to publication

on the USPTO website at the link noted by Applicant are for applications which were improperly published. The USPTO did not have the statutory authority to publish the applications, thus the patent application publications were withdrawn. Applicant did not file the application with a nonpublication request and the application is not subject to a secrecy order, so therefore the application was properly published in accordance with established procedure.

The Office has no statutory authority to correct, redact or simply abbreviate a name on a properly published patent application publication. In accordance with Office procedures, the names of the inventors and a correspondence address are published on the patent application publications.

To facilitate matching papers to an application, Office procedures require that all correspondence related to a national patent application already filed with the U.S. Patent and Trademark Office must include the identification of the application number or the serial number and the filing date assigned to the application by the Office. It would be of great assistance to the Office if all incoming papers pertaining to a filed application carried the following items:

(A) Application number (checked for accuracy, including series code and serial no.).
(B) Art Unit number (copied from most recent Office communication).
(C) Filing date.
(D) Name of the examiner who prepared the most recent Office action.
(E) Title of invention.
(F) Confirmation number (see MPEP § 503).

Telephone inquiries regarding this communication should be directed the undersigned at (571) 272-7709.

Mark Polutta
Senior Legal Advisor
Office of Patent Legal Administration
Office of the Deputy Commissioner
for Patent Examination Policy

UNITED STATES PATENT AND TRADEMARK OFFICE

Commissioner for Patents
United States Patent and Trademark Office
P.O. Box 1450
Alexandria, VA 22313-1450
www.uspto.gov

DELPHI TECHNOLOGIES, INC.
M/C 480-410-202
PO BOX 5052
TROY, MI 48007

COPY MAILED

OCT 27 2008

OFFICE OF PETITIONS

In re Application of	:	
Ting Z. Wang	:	
Application No. 11/143,054	:	ON PETITION
Filed: June 2, 2005	:	
Attorney Docket No. DP-312506	:	

This is a decision on the petition under the unintentional provisions of 37 CFR 1.137(b), filed July 10, 2008, to revive the above-identified application.

The petition is **GRANTED**.

The application became abandoned for failure to timely file a reply within the meaning of 37 CFR 1.113 to the final Office action of December 12, 2007. The proposed reply required for consideration of a petition to revive must be a Notice of Appeal (and appeal fee required by 37 CFR 41.20(b)(2), an amendment that *prima facie* places the application in condition for allowance, a Request for Continued Examination and submission (37 CFR 1.114), or the filing of a continuing application under 37 CFR 1.53(b). See MPEP 711.03(c)(III)(A)(2). No extension of time pursuant to the provisions of 37 CFR 1.136(a) was obtained. Accordingly, the date of abandonment of this application is March 13, 2008.

The petition satisfies the requirements of 37 CFR 1.137(b) in that petitioner has supplied (1) the reply in the form of a Request for Continued Examination (RCE) and fee of $810 and the submission required by 37 CFR 1.114; (2) the petition fee of $1540; and (3) a proper statement of unintentional delay.

Telephone inquiries concerning this decision should be directed to the undersigned at (571) 272-3210.

This application is being referred to Technology Center AU 2169 for processing of the RCE and for appropriate action by the Examiner in the normal course of business on the amendment submitted in accordance with 37 CFR 1.114.

Irvin Dingle
Petition Examiner
Office of Petitions

UNITED STATES PATENT AND TRADEMARK OFFICE

Commissioner for Patents
United States Patent and Trademark Office
P.O. Box 1450
Alexandria, VA 22313-1450
www.uspto.gov

March 3, 2010

Steven W. Stewart
Digimarc Corporation
9405 SW Gemini Drive
Beaverton, OR 97008

Patent No.: 7,668,334 B2
Application No.: 11/143,088
Inventor(s): Alastair M. Reed, et al.
Issued: February 23, 2010
Title: **CONDITIONING IMAGERY TO BETTER RECEIVE STEGANOGRAPHIC ENCODING**

Re: Request for Certificate of Correction

Consideration has been given your request for the issuance of a certificate of correction for the above-identified patent under the provisions of Rule(s) 1.322 and/or 1.323.

Assignees' names and addresses (assignment data) printed in a patent, are based *solely* on information supplied in the appropriate space for identifying the assignment data, i.e., item 3 of the Issue Fee Transmittal Form PTOL-85B. Granting of a request under 37 CFR 3.81(b) is required to correct applicant's error providing ***incorrect or erroneous*** assignment data, *before* issuance of a Certificate of Correction, under 37 CFR 1.323 *(see Manual of Patent Examining Procedures (M.P.E.P) Chp.1400, sect. 1481).* This procedure is required *at any time after the issue fee is paid*, including after issuance of the patent.

In view of the foregoing, your request, in this matter, is hereby denied.

A request to correct the Assignee under 37 CFR 3.81(b) should include:

A. **the processing fee set forth in 37 CFR 1.117(h) (currently $130);**
B. a statement that the failure to include the correct assignee name on the PTOL-85B was inadvertent; and
C. a copy of the Notice of Recordation of Assignment Document, reflecting the reel and frame number where the assignment(s) is recorded and/or reflecting proof of *the date* the assignment was submitted for recordation.

In the Request, Applicant(s) may request that the file be forwarded to Certificates of Correction Branch, for issuance of a Certificate of Correction, if the Request is granted.

Any request under 37 CFR 3.81(b) should be directed to the following address or facsimile number:

By mail:	Mail Stop PETITIONS Commissioner for Patents Post Office Box 1450 Alexandria, VA 22313-1450
By hand:	Customer Service Window Mail Stop Petitions Randolph Building 401 Dulany Street Alexandria, VA 22314
By fax:	(571) 273-0025 ATTN: Office of Petitions

If a fee (currently $100) was previously submitted for consideration of a Request for Certificate of Correction, under CFR 1.323, to correct assignment data, no additional fee is required.

/Virginia Tolbert/
Virginia Tolbert
For Mary Diggs, Supervisor
Decisions & Certificate of Correction Branch
571- 272-0460 (voice)
571-270-9892 (fax)

vt

UNITED STATES PATENT AND TRADEMARK OFFICE

Commissioner for Patents
United States Patent and Trademark Office
P.O. Box 1450
Alexandria, VA 22313-1450
www.uspto.gov

MAILED

MAY 21 2010

OFFICE OF PETITIONS

DIGIMARC CORPORATION
9405 SW GEMINI DRIVE
BEAVERTON OR 97008

In re Patent No. 7,668,334	:	
Issue Date: February 23, 2010	:	
Application No. 11/143,088	:	ON PETITION
Filed: June 1, 2005	:	
Attorney Docket No. P1115W	:	

This is a decision on the petition filed April 6, 2010, which is being treated as a request under 37 CFR 3.81(b)[1] to correct the name of the assignee on the front page of the above-identified patent by way of a Certificate of Correction.

The request is **GRANTED**.

Telephone inquiries concerning this decision may be directed to Terri Johnson at (571) 272-2991. Inquiries regarding the issuance of a certificate of correction should be directed to the Certificate of Correction Branch at (571) 272-4200.

The Certificates of Correction Branch will be notified of this decision granting the petition under 37 CFR 3.81(b) and directing issuance of the requested Certificate of Correction.

Terri Johnson
Petitions Examiner
Office of Petitions

[1] *See* MPEP 1309, subsection II; and Official Gazette of June 22, 2004.

UNITED STATES PATENT AND TRADEMARK OFFICE

Commissioner for Patents
United States Patent and Trademark Office
P.O. Box 1450
Alexandria, VA 22313-1450
www.uspto.gov

OBER/KALER
c/o Royal W. Craig
120 East Baltimore Street
Baltimore MD 21202

MAILED

JUN 29 2009

OFFICE OF PETITIONS

ON PETITION

In re Application of :
Tae Young Ahn et al. :
Application No. 11/143,108 :
Filed: June 2, 2005 :
Attorney Docket No. CIP-1-AHN :

This is a decision on the petition under 37 CFR 1.137(b), filed May 6, 2009, to revive the above-identified application.

The petition is **GRANTED**.

The above-identified application became abandoned for failure to reply in a timely manner to the non-final Office action mailed March 27, 2008, which set a shortened statutory period for reply of three (3) months. No extensions of time under the provisions of 37 CFR 1.136(a) were obtained. Accordingly, the above-identified application became abandoned on June 28, 2008.

The petition satisfies the conditions for revival pursuant to the provisions of 37 CFR 1.137(b) in that (1) the reply in the form of an amendment; (2) the petition fee of $810; and (3) the required statement of unintentional delay have been received. Accordingly, the reply to the non-final Office Action of March 27, 2008 is accepted as having been unintentionally delayed.

Telephone inquiries concerning this decision should be directed to Ron Abelson at (571) 272-3165 or in his absence, the undersigned at (571) 272-7099.

The application file is being referred to Technology Center AU 3762 for appropriate action on the concurrently filed amendment.

David Bucci
Petitions Examiner
Office of Petitions

UNITED STATES PATENT AND TRADEMARK OFFICE

Commissioner for Patents
United States Patent and Trademark Office
P.O. Box 1450
Alexandria, VA 22313-1450
www.uspto.gov

COPY MAILED

SEP 2 4 2008

OFFICE OF PETITIONS

SONNENSCHEIN NATH & ROSENTHAL LLP
P.O. BOX 061080
WACKER DRIVE STATION, SEARS TOWER
CHICAGO, IL 60606-1080

In re Application of
Morad Heiman, et al.
Application No. 11/143,131
Filed: June 1, 2005
Attorney Docket No. 40007541-0002-002

ON PETITION

This is a decision in response to the petition, filed June 2, 2008, to revive the above-identified application under the provisions of 37 CFR 1.137(b).

The petition is **GRANTED**.

The above-identified application became abandoned for failure to reply in a timely manner to a Notice of Non-Compliant Amendment mailed September 25, 2007. A Notice of Abandonment was mailed on May 14, 2008. On June 2, 2008, the present petition was filed.

The petition is not signed by a registered patent attorney or patent agent of record. However, in accordance with 37 CFR 1.34, the signature of Mr. Oren Reches appearing on the correspondence shall constitute a representation to the United States Patent and Trademark Office that he is authorized to represent the particular party on whose behalf he acts. If, Mr. Reches desires to receive correspondence regarding this file, the appropriate power of attorney documents must be submitted. A courtesy copy of this decision is being mailed to Mr. Reches the petitioner herein. However, until otherwise instructed, all future correspondence regarding this application file will be directed solely to the above-noted correspondence address of record.

The petition satisfies the requirements of 37 CFR 1.137(b) in that petitioner has supplied (1) the reply in the form of amendment; (2) the petition fee of $770; and (3) an adequate statement of unintentional delay[1].

Petitioner requests a refund of the 3-month extension fee paid on March 25, 2008. 37 CFR 1.136(a)(2) states, "[t]he date on which the petition and the fee have been filed is the date for purposes of determining the period of extension and the corresponding amount of the fee..." In

[1] 37 CFR 1.137(b)(3) requires a statement that the entire delay in filing the required reply from the due date for the reply until the filing of a grantable petition pursuant to 37 CFR 1.137(b) was unintentional. While the statement is not made by an attorney of record, such statement is being treated as having been made as the result of a reasonable inquiry into the facts and circumstances of such delay. See 37 CFR 10.18(b) and Changes to Patent Practice and Procedure; Final Rule Notice, 62 Fed. Reg. 53131, 53178 (October 10, 1997), 1203 Off. Gaz. Pat. Office 63, 103 (October 21, 1997). In the event that such an inquiry has not been made, petitioner must make such an inquiry. If such inquiry results in the discovery that it is not correct that the entire delay in filing the required reply from the due date for the reply until the filing of a grantable petition pursuant to 37 CFR 1.137(b) was unintentional, petitioner must notify the Office.

this case, applicant submitted the fee for a 3-month extension of time within the fifth month. Since the fee was submitted after abandonment and in an amount insufficient to effectively extend the period for reply until the fifth month, the $525 fee is being refunded.

The application is being referred to Technology Center AU 2612 for appropriate action by the Examiner in the normal course of business.

Telephone inquiries concerning this decision should be directed to the undersigned at (571) 272-3204. Inquiries relating to further prosecution should be directed to the Technology Center.

Sherry D. Brinkley
Petitions Examiner
Office of Petitions

cc: OREN RECHES
SUITE 100, 211 NORTH UNION STREET
ALEXANDRIA, VA 22314

UNITED STATES PATENT & TRADEMARK OFFICE
Washington, D.C. 20231

REQUEST FOR PATENT FEE REFUND

1 Date of Request: 09/22/08

2 Serial/Patent # 11/143,131

	3 Please refund the following fee(s):	4 PAPER NUMBER	5 DATE FILED	6 AMOUNT
	Filing			$
	Amendment			$
X	Extension of Time	WFEE	03/25/08	$ 525.00
	Notice of Appeal/Appeal			$
	Petition			$
	Issue			$
	Cert of Correction/Terminal Disc.			$
	Maintenance			$
	Assignment			$
	Other			$

7 TOTAL AMOUNT OF REFUND $ 525.00

8 TO BE REFUNDED BY: CREDIT CARD

	Treasury Check
	Credit Deposit A/C #:

9 [ ][ ]--[ ][ ][ ][ ]

10 REASON:

	Overpayment
	Duplicate Payment
X	No Fee Due (Explanation):

Fee was insufficient

11 REFUND REQUESTED BY:

TYPED/PRINTED NAME: Sherry D. Brinkley TITLE: Petitions Examiner

SIGNATURE: Sherry D. Brinkley PHONE: (571) 272-3204

OFFICE: Office of Petitions

****

THIS SPACE RESERVED FOR FINANCE USE ONLY:

APPROVED: [signature] DATE: 09/29/08

Instructions for completion of this form appear on the back. After completion, attach white and yellow copies to the official file and mail or hand-carry to:

Office of Finance
Refund Branch
Crystal Park One, Room 802B

FORM PTO 1577
(01/90)

Electronic Acknowledgement Receipt

EFS ID:	3045310
Application Number:	11143131
International Application Number:	
Confirmation Number:	8345
Title of Invention:	Adjustment date: 09/24/2008 GARIAS 03/25/2008 INTEFSW 00004512 11143131 01 FC:2253 -525.00 OP RFID-based toy and system
First Named Inventor/Applicant Name:	Morad Heiman
Customer Number:	26263
Filer:	Oren Reches
Filer Authorized By:	
Attorney Docket Number:	40007541-0002-002
Receipt Date:	25-MAR-2008
Filing Date:	01-JUN-2005
Time Stamp:	04:46:01
Application Type:	Utility under 35 USC 111(a)

Payment information:

Submitted with Payment	yes	Refund Ref:
Payment Type	Credit Card	09/24/2008 0030061515
Payment was successfully received in RAM	$525	Credit Card Refund Total: $525.00
RAM confirmation Number	4512	
Deposit Account		VISA....: XXXXXXXXXXXX0716
Authorized User		

File Listing:

Document Number	Document Description	File Name	File Size(Bytes) /Message Digest	Multi Part /.zip	Pages (if appl.)

UNITED STATES PATENT AND TRADEMARK OFFICE

Commissioner for Patents
United States Patent and Trademark Office
P.O. Box 1450
Alexandria, VA 22313-1450
www.uspto.gov

TROXELL LAW OFFICE PLLC
5205 LEESBURG PIKE SUITE 1404
FALLS CHURCH, VA 22041

COPY MAILED

JAN 04 2007

OFFICE OF PETITIONS

In re Application of	:	
Chen, Li-Hsueh	:	
Application No. 11/143,136	:	ON PETITION
Filed: June 3, 2005	:	
Attorney Docket No. 3097-134	:	

This is a decision on the petition under 37 C.F.R. § 1.137(b), filed August 21, 2006, to revive the above-identified application.

The petition is **GRANTED.**

The petition satisfies the conditions for revival pursuant to the provisions of 37 CFR 1.137(b) in that (1) the reply in the form of payment of the issue and publication fees; (2) the petition fee; and (3) the required statement of unintentional delay have been received. Accordingly, the response has been accepted as having been unintentionally delayed.

Although petitioner indicated that the Issue Fee Transmittal Form (PTOL-85b) was submitted with the instant petition, the document cannot be located in the application file. Accordingly, if petitioner desires to have the information normally found thereon printed on the patent, the attached blank Issue Fee Transmittal Form should be completed and returned to the Publishing Division within **ONE MONTH** from the mail date of this decision.

This matter is being referred to the Publishing Division for processing into a patent.

Telephone inquiries regarding this decision should be directed to the undersigned at (571) 272-3206.

Liana Walsh
Petitions Examiner
Office of Petitions

Enclosure: Issue Fee Transmittal Form (PTOL-85b)

PART B - FEE(S) TRANSMITTAL

Complete and send this form, together with applicable fee(s), to: Mail **Mail Stop ISSUE FEE**
Commissioner for Patents
P.O. Box 1450
Alexandria, Virginia 22313-1450
or Fax (571)-273-2885

INSTRUCTIONS: This form should be used for transmitting the ISSUE FEE and PUBLICATION FEE (if required). Blocks 1 through 5 should be completed where appropriate. All further correspondence including the Patent, advance orders and notification of maintenance fees will be mailed to the current correspondence address as indicated unless corrected below or directed otherwise in Block 1, by (a) specifying a new correspondence address; and/or (b) indicating a separate "FEE ADDRESS" for maintenance fee notifications.

CURRENT CORRESPONDENCE ADDRESS (Note: Use Block 1 for any change of address)

Note: A certificate of mailing can only be used for domestic mailings of the Fee(s) Transmittal. This certificate cannot be used for any other accompanying papers. Each additional paper, such as an assignment or formal drawing, must have its own certificate of mailing or transmission.

Certificate of Mailing or Transmission

I hereby certify that this Fee(s) Transmittal is being deposited with the United States Postal Service with sufficient postage for first class mail in an envelope addressed to the Mail Stop ISSUE FEE address above, or being facsimile transmitted to the USPTO (571) 273-2885, on the date indicated below.

(Depositor's name)

(Signature)

(Date)

APPLICATION NO.	FILING DATE	FIRST NAMED INVENTOR	ATTORNEY DOCKET NO.	CONFIRMATION NO.

TITLE OF INVENTION:

APPLN. TYPE	SMALL ENTITY	ISSUE FEE DUE	PUBLICATION FEE DUE	PREV. PAID ISSUE FEE	TOTAL FEE(S) DUE	DATE DUE

EXAMINER	ART UNIT	CLASS-SUBCLASS

1. Change of correspondence address or indication of "Fee Address" (37 CFR 1.363).

☐ Change of correspondence address (or Change of Correspondence Address form PTO/SB/122) attached.

☐ "Fee Address" indication (or "Fee Address" Indication form PTO/SB/47; Rev 03-02 or more recent) attached. **Use of a Customer Number is required.**

2. For printing on the patent front page, list

(1) the names of up to 3 registered patent attorneys or agents OR, alternatively, 1_____

(2) the name of a single firm (having as a member a registered attorney or agent) and the names of up to 2 registered patent attorneys or agents. If no name is listed, no name will be printed. 2_____ 3_____

3. ASSIGNEE NAME AND RESIDENCE DATA TO BE PRINTED ON THE PATENT (print or type)

PLEASE NOTE: Unless an assignee is identified below, no assignee data will appear on the patent. If an assignee is identified below, the document has been filed for recordation as set forth in 37 CFR 3.11. Completion of this form is NOT a substitute for filing an assignment.

(A) NAME OF ASSIGNEE (B) RESIDENCE: (CITY and STATE OR COUNTRY)

Please check the appropriate assignee category or categories (will not be printed on the patent) : ☐ Individual ☐ Corporation or other private group entity ☐ Government

4a. The following fee(s) are submitted:

☐ Issue Fee

☐ Publication Fee (No small entity discount permitted)

☐ Advance Order - # of Copies _____

4b. Payment of Fee(s): **(Please first reapply any previously paid issue fee shown above)**

☐ A check is enclosed.

☐ Payment by credit card. Form PTO-2038 is attached.

☐ The Director is hereby authorized to charge the required fee(s), any deficiency, or credit any overpayment, to Deposit Account Number _____ (enclose an extra copy of this form).

5. **Change in Entity Status** (from status indicated above)

☐ a. Applicant claims SMALL ENTITY status. See 37 CFR 1.27.

☐ b. Applicant is no longer claiming SMALL ENTITY status. See 37 CFR 1.27(g)(2).

NOTE: The Issue Fee and Publication Fee (if required) will not be accepted from anyone other than the applicant; a registered attorney or agent; or the assignee or other party in interest as shown by the records of the United States Patent and Trademark Office.

Authorized Signature _____ Date _____

Typed or printed name _____ Registration No. _____

This collection of information is required by 37 CFR 1.311. The information is required to obtain or retain a benefit by the public which is to file (and by the USPTO to process) an application. Confidentiality is governed by 35 U.S.C. 122 and 37 CFR 1.14. This collection is estimated to take 12 minutes to complete, including gathering, preparing, and submitting the completed application form to the USPTO. Time will vary depending upon the individual case. Any comments on the amount of time you require to complete this form and/or suggestions for reducing this burden, should be sent to the Chief Information Officer, U.S. Patent and Trademark Office, U.S. Department of Commerce, P.O. Box 1450, Alexandria, Virginia 22313-1450. DO NOT SEND FEES OR COMPLETED FORMS TO THIS ADDRESS. SEND TO: Commissioner for Patents, P.O. Box 1450, Alexandria, Virginia 22313-1450.

Under the Paperwork Reduction Act of 1995, no persons are required to respond to a collection of information unless it displays a valid OMB control number.

Privacy Act Statement

The **Privacy Act of 1974 (P.L. 93-579)** requires that you be given certain information in connection with your submission of the attached form related to a patent application or patent. Accordingly, pursuant to the requirements of the Act, please be advised that: (1) the general authority for the collection of this information is 35 U.S.C. 2(b)(2); (2) furnishing of the information solicited is voluntary; and (3) the principal purpose for which the information is used by the U.S. Patent and Trademark Office is to process and/or examine your submission related to a patent application or patent. If you do not furnish the requested information, the U.S. Patent and Trademark Office may not be able to process and/or examine your submission, which may result in termination of proceedings or abandonment of the application or expiration of the patent.

The information provided by you in this form will be subject to the following routine uses:

1. The information on this form will be treated confidentially to the extent allowed under the Freedom of Information Act (5 U.S.C. 552) and the Privacy Act (5 U.S.C 552a). Records from this system of records may be disclosed to the Department of Justice to determine whether disclosure of these records is required by the Freedom of Information Act.
2. A record from this system of records may be disclosed, as a routine use, in the course of presenting evidence to a court, magistrate, or administrative tribunal, including disclosures to opposing counsel in the course of settlement negotiations.
3. A record in this system of records may be disclosed, as a routine use, to a Member of Congress submitting a request involving an individual, to whom the record pertains, when the individual has requested assistance from the Member with respect to the subject matter of the record.
4. A record in this system of records may be disclosed, as a routine use, to a contractor of the Agency having need for the information in order to perform a contract. Recipients of information shall be required to comply with the requirements of the Privacy Act of 1974, as amended, pursuant to 5 U.S.C. 552a(m).
5. A record related to an International Application filed under the Patent Cooperation Treaty in this system of records may be disclosed, as a routine use, to the International Bureau of the World Intellectual Property Organization, pursuant to the Patent Cooperation Treaty.
6. A record in this system of records may be disclosed, as a routine use, to another federal agency for purposes of National Security review (35 U.S.C. 181) and for review pursuant to the Atomic Energy Act (42 U.S.C. 218(c)).
7. A record from this system of records may be disclosed, as a routine use, to the Administrator, General Services, or his/her designee, during an inspection of records conducted by GSA as part of that agency's responsibility to recommend improvements in records management practices and programs, under authority of 44 U.S.C. 2904 and 2906. Such disclosure shall be made in accordance with the GSA regulations governing inspection of records for this purpose, and any other relevant (*i.e.*, GSA or Commerce) directive. Such disclosure shall not be used to make determinations about individuals.
8. A record from this system of records may be disclosed, as a routine use, to the public after either publication of the application pursuant to 35 U.S.C. 122(b) or issuance of a patent pursuant to 35 U.S.C. 151. Further, a record may be disclosed, subject to the limitations of 37 CFR 1.14, as a routine use, to the public if the record was filed in an application which became abandoned or in which the proceedings were terminated and which application is referenced by either a published application, an application open to public inspection or an issued patent.
9. A record from this system of records may be disclosed, as a routine use, to a Federal, State, or local law enforcement agency, if the USPTO becomes aware of a violation or potential violation of law or regulation.

UNITED STATES PATENT AND TRADEMARK OFFICE

Commissioner for Patents
United States Patent and Trademark Office
P.O. Box 1450
Alexandria, VA 22313-1450
www.uspto.gov

JJGJR.: 07-05

Paper No: __

COPY MAILED

SEP 2 2 2005

OFFICE OF PETITIONS

INTELLECTUAL PROPERTY
LAW GROUP LLP
12 SOUTH FIRST STREET
SUITE 1205
SAN JOSE CA 95113

In re Application of	:	
Tsujino et al.	:	
Application No. 11/143,141	:	DECISION ON PETITION
Filing Date: 1 June, 2005	:	
Attorney Docket No. SOHMEI.PT1013	:	

This is a decision on the petition filed 20 July, 2005, under 37 C.F.R. §1.53.

The petition is **GRANTED in part**, and **DISMISSED in part**.

BACKGROUND

The application was deposited on 1 June, 2005.

On 15 July, 2005, the Office of Initial Patent Examination (OIPE) mailed a Notice of Incomplete Application (the Notice) stating that the application had not been accorded a filing date because it had been deposited without drawings as required under 35 U.S.C. 113 (first sentence).

OIPE indicated that Petitioner might:

- contend via petition that the drawings were submitted, or that they were not necessary for a filing date; or

- submit the drawings and accept the date of submission as the filing date.

OIPE set a two- (2-) month period for reply.

On 20 July, 2005, Petitioner submitted the instant petition, seeking a 1 June, 2005, filing date for the application. Petitioner acknowledges therein that the figures were omitted in error, however, Petitioner alleges that the application incorporates by reference "the parent [A]pplication [No]. 09/928,836, filed 08/11/2001."

ANALYSIS

Although Petitioner has failed to allege, *inter alia*, that the instant application does not require drawings for the understanding of the subject matter to be patented, a review of the application indicates that, *inter alia*, the title of the application is: "Low-Reflection Glass Article and Method for Manufacturing," (emphasis supplied) and further review indicates that Claim 1 is a method claim. (See: MPEP §601.01(f)(A).)

It is the practice of the Office to treat an application that contains at least one process or method claim as an application for which a drawing is not necessary for the understanding of the invention under 35 U.S.C. §113 (first sentence). (See: MPEP §601.01[1])

---

[1] The commentary at MPEP §601.01 provides in pertinent part:

* * *

601.01(f) Applications Filed Without Drawings

35 U.S.C. 111(a)(2)(B) and 35 U.S.C. 111(b)(1)(B) each provide, in part, that an "application shall include . . . a drawing as prescribed by section 113 of this title" and 35 U.S.C. 111(a)(4) and 35 U.S.C. 111(b)(4) each provide, in part, that the "filing date . . . shall be the date on which . . . any required drawing are received in the Patent and Trademark Office." 35 U.S.C. 113 (first sentence) in turn provides that an "applicant shall furnish a drawing where necessary for the understanding of the subject matter sought to be patented.

Applications filed without drawings are initially inspected to determine whether a drawing is referred to in the specification, and if not, whether a drawing is necessary for the understanding of the invention. 35 U.S.C. 113 (first sentence).

It has been USPTO practice to treat an application that contains at least one process or method claim as an application for which a drawing is not necessary for an understanding of the invention under 35 U.S.C. 113 (first sentence). The same practice has been followed in composition applications.

The same practice has been followed in composition applications. Other situations in which drawings are usually not considered necessary for the understanding of the invention under 35
U.S.C. 113 (first sentence) are:

(A) *Coated articles or products*: where the invention resides solely in coating or impregnating a conventional sheet (*e.g.*, paper or cloth, or an article of known and conventional character with a particu lar composition), unless significant details of structure or arrangement are involved in the article claims;

* * *

A nonprovisional application having at least one claim, or a provisional application having at least some disclosure, directed to the subject matter discussed above for which a drawing is usually not considered essential for a filing date, not describing drawing figures in the specification, and filed without drawings will simply be processed for examination, so long as the application contains something that can be construed as a written description. A nonprovisional application having at least one claim, or a provisional application having at least some disclosure, directed to the subject matter discussed above for which a drawing is usually not considered essential for a filing date, describing drawing figure(s) in the specification, but filed without drawings will be treated as an application filed without all of the drawing figures referred to in the specification as discussed in MPEP § 601.01(g), so long as the application contains something that can be construed as a written description. In a situation in which the appropriate Technology Center (TC) determines that drawings are necessary under 35 U.S.C. 113

The arguments in the petition will be construed, in part, to mean that Petitioner, a registered practitioner before the Office, asserts that drawings are not necessary for a filing date in this application. Drawings will not be further considered as a part of this case.

In view of the above, the Notice mailed on 15 July, 2005, hereby is withdrawn to the extent that it indicates no filing date will be granted.

CONCLUSION

The petition is **granted in part**, to the extent that the application will be accorded the filing date of 1 June, 2005, without the drawings containing Figures 1 and 2 as part of the original disclosure of the application; in all other respects the petition **is dismissed**. The petition fee is waived and will be refunded.

As to Petitioner's averment that the parent application was incorporated by reference, this incorporation may be proper in practice before the Office. (See: MPEP §201.06(c) (in pertinent part).)[2]

As a matter of expediting prosecution, Petitioner may submit a copy of the parent application as filed with a preliminary amendment and seek entry of that amendment by the Examiner.

No petition is required for that purpose.

(first sentence) the filing date issue will be reconsidered by the USPTO.

* * *

[2] The commentary at MPEP §201.06(c) provides in pertinent part:

* * *

INCORPORATION BY REFERENCE

* * *

In a continuation or divisional application, the safe-guard (petition and fee under former 37 C.F.R. 1.60(b)) concerning the filing of an application lacking all of the pages of the specification or sheets of drawings of the prior application has not been retained in 37 C.F.R. 1.53(b) since the specification and drawings of a continuation or divisional application are not limited to a reproduction or a "true copy" of the prior application. As a safeguard, however, an applicant may incorporate by reference the prior application by including, in the continuation or divisional application-as-filed, a statement that such specifically enumerated prior application or applications are "hereby incorporated herein by reference." The statement may appear in the specification or in the application transmittal letter. The incorporation by reference statement can only be relied upon to permit the entering of a portion of the prior application into the continuation or divisional application when the portion of the prior application has been inadvertently omitted from the submitted application papers in the continuation or divisional application The inclusion of this incorporation by reference of the prior application(s) will permit an applicant to amend the continuation or divisional application to include any subject matter in such prior application(s), without the need for a petition provided the continuation or divisional application is entitled to a filing date notwithstanding the incorporation by reference. (Emphasis supplied.).

The application is being referred to the Office of Initial Patent Examination to be processed for correction of the filing date to 1 June, 2005, with the 51 pages of specification (description, claims, abstract) deposited on 1 June, 2005, and no drawings as the original disclosure.

As indicated above, the matter of incorporation by reference is exclusively the purview of the Examiner and shall be considered by the Examiner as a preliminary amendment submitted by Petitioner.

Telephone inquiries specific to this decision may be directed to the undersigned at (571) 272-3214.

John J. Gillon, Jr.
Senior Attorney
Office of Petitions

SPE RESPONSE FOR CERTIFICATE OF CORRECTION

Paper No.:

DATE :

TO SPE OF : ART UNIT

SUBJECT : Request for Certificate of Correction on Patent No.:

A response is requested with respect to the accompanying request for a certificate of correction.

Please complete this form and return with file, within **7** days to:
Certificates of Correction Branch - ST (South Tower) 9A22
Palm location **7590** - Tel. No. (703) 305-8309

With respect to the change(s) requested, correcting Office and/or Applicant's errors, should the patent read as shown in the certificate of correction? No new matter should be introduced, nor should the scope or meaning of the claims be changed.

Thank You For Your Assistance **Certificates of Correction Branch**

The request for issuing the above-identified correction(s) is hereby:

Note your decision on the appropriated box.

☐ **Approved** All changes apply.

☐ **Approved in Part** Specify below which changes **do not** apply.

☐ **Denied** State the reasons for denial below.

Comments:

UNITED STATES PATENT AND TRADEMARK OFFICE

Commissioner for Patents
United States Patent and Trademark Office
P.O. Box 1450
Alexandria, VA 22313-1450
www.uspto.gov

KEAN, MILLER, HAWTHORNE, D'ARMOND,
MCCOWAN & JARMAN, L.L.P.
ONE AMERICAN PLACE, 22ND FLOOR
P.O. BOX 3513
BATON ROUGE LA 70821

COPY MAILED

JUL 19 2007

OFFICE OF PETITIONS

In re Application of	:	
Paul HEBERT	:	
Application No. 11/143,166	:	DECISION ON PETITION
Filed: June 2, 2005	:	UNDER 37 CFR 1.137(b)
Attorney Docket No. 18096-0	:	

This is a decision on the petition, filed May 2, 2007, which is being treated as a petition under 37 CFR 1.137(b) to revive the instant nonprovisional application for failure to timely notify the U.S. Patent and Trademark (USPTO) of the filing of an application in a foreign country, or under a multinational treaty that requires publication of applications eighteen months after filing. *See* 37 CFR 1.137(f).

The petition is **GRANTED**.

Petitioner states that this nonprovisional application is the subject of an application filed in an eighteen-month publication country on June 1, 2006. However, the USPTO was unintentionally not notified of this filing within 45 days subsequent to the filing of the subject application in an eighteen-month publication country.

In view of the above, this application became abandoned pursuant to 35 U.S.C. § 122(b)(2)(B)(iii) and 37 CFR 1.213(c) for failure to timely notify the Office of the filing of an application in a foreign country or under a multilateral international agreement that requires publication of applications 18 months after filing.

A petition to revive an application abandoned pursuant to 35 U.S.C. 122(b)(2)(B)(iii) for failure to notify the USPTO of a foreign filing must be accompanied by:

(1) the required reply which is met by the notification of such filing in a foreign country or under a multinational treaty;
(2) the petition fee as set forth in 37 CFR 1.17(m); and
(3) a statement that the entire delay in filing the required reply from the due date of the reply until the filing of a grantable petition was unintentional.

The petition has been found to be in compliance with 37 CFR 1.137(b). Accordingly, the failure to timely notify the USPTO of a foreign or international filing within 45 days after the date of filing of such foreign or international application as provided by 35 U.S.C. § 122(b)(2)(B)(iii) and 37 CFR 1.213(c) is accepted as having been unintentionally delayed.

The previous Request and Certification under 35 U.S.C. § 122(b)(2)(B)(i) has been rescinded. A Communication Regarding Rescission of Nonpublication Request, which sets forth the projected publication date of October 25, 2007, has been mailed under separate cover.

Telephone inquiries concerning this decision should be directed to the undersigned at (571) 272-3218.

This application is being referred to Technology Center Art Unit 1746 for examination in due course.

Frances Hicks
Petitions Examiner
Office of Petitions

UNITED STATES PATENT AND TRADEMARK OFFICE

Commissioner for Patents
United States Patent and Trademark Office
P.O. Box 1450
Alexandria, VA 22313-1450
www.uspto.gov

BEYER LAW GROUP, LLP
P.O. BOX 1687
CUPERTINO, CA 95015-1687

COPY MAILED

OCT 27 2008

OFFICE OF PETITIONS

In re Application of	:	
Yoshihiro Someno	:	
Application No. 11/143,210	:	DECISION ON PETITION
Filed: June 1, 2005	:	TO WITHDRAW
Attorney Docket No. ALPSP206	:	FROM RECORD
	:	

This is a decision on the Request to Withdraw as attorney or agent of record under 37 C.F.R. § 1.36(b), filed February 6, 2008.

The request is **APPROVED**.

A grantable request to withdraw as attorney/agent of record must be signed by every attorney/agent seeking to withdraw or contain a clear indication that one attorney is signing on behalf of another/others. A request to withdraw will not be approved unless at least 30 (thirty) days would remain between the date of approval and the later of the expiration date of a time to file a response or the expiration date of the maximum time period which can be extended under 37 C.F.R. § 1.136(a).

The request was signed by James E. Austin on behalf of Haro Yawata.

Haro Yawata has been withdrawn as attorneys or agents of record; all other attorneys remain of record.
The correspondence address of record remains unchanged.

There are no pending Office actions at the present time.

Telephone inquiries concerning this decision should be directed to undersigned at 571-272-1642.

/April M. Wise/
April M. Wise
Petitions Examiner
Office of Petitions

UNITED STATES PATENT AND TRADEMARK OFFICE

Commissioner for Patents
United States Patent and Trademark Office
P.O. Box 1450
Alexandria, VA 22313-1450
www.uspto.gov

DR. BOLESH J. SKUTNIK
BJ ASSOCIATES
51 BANBURY LANE
WEST HARTFORD, CT 06107

COPY MAILED

FEB 03 2009

OFFICE OF PETITIONS

In re Application of	:	
John R. **ZEBRYK Jr, et al.**	:	
Application No. 11/143,217	:	DECISION ON PETITION
Filed: June 2, 2005	:	Under 37 CFR 1.137(b)
Attorney Docket No. **BJA1251A**	:	

This is a decision on the petition under 37 CFR 1.137(b), filed October 1, 2007 and re-submitted May 30, 2008, to revive the above-identified application.

The petition is **GRANTED**.

The application became abandoned for failure to reply in a timely manner to the non-final Office action mailed, March 22, 2006, which set a shortened statutory period for reply of three (3) months. No extensions of time under the provisions of 37 CFR 1.136(a) were obtained. Accordingly, the application became abandoned on June 23, 2006.

The petition satisfies the requirements of 37 CFR 1.137(b) in that petitioner has supplied (1) the reply in the form of an amendment with corrected drawings; (2) the petition fee of $770; and (3) an adequate statement of unintentional delay.

The application is being referred to Technology Center Art Unit 3673 for consideration of the amendment filed October 1, 2007 and re-submitted May 30, 2008.

Telephone inquiries concerning this decision should be directed to Monica A. Graves at (571) 272-7253.

Brian W. Brown
Petitions Examiner
Office of Petitions

UNITED STATES PATENT AND TRADEMARK OFFICE

Commissioner for Patents
United States Patent and Trademark Office
P.O. Box 1450
Alexandria, VA 22313-1450
www.uspto.gov

Gary F. Matz
NOVA Chemicals Inc.
Westpointe Center
1550 Coraopolis Heights Road
Moon Township PA 15108

MAILED

MAR 13 2009

OFFICE OF PETITIONS

In re Application of	:
Steven Michael Krupinski et al.	:
Application No. 11/143,267	: DECISION ON PETITIONS
Filed: June 2, 2005	: UNDER 37 CFR 1.78(a)(3) AND (a)(6)
Attorney Docket No. 9288 USA-NONP	:

This is a decision on the petitions under 37 CFR 1.78(a)(3) filed November 11, 2008 which is being treated as a petition under 37 CFR §§ 1.78(a)(3) and 1.78(a)(6), to accept an unintentionally delayed claim under 35 U.S.C. §§120 and 119(e) for the benefit of the prior-filed applications set forth in the concurrently filed amendment.

The petitions are **GRANTED.**

A petition for acceptance of a claim for late priority under 37 CFR §§ 1.78(a)(3) and 1.78(a)(6) is only applicable to those applications filed on or after November 29, 2000. Further, the petition is appropriate only after the expiration of the period specified in 37 CFR §§ 1.78(a)(2)(ii) and 1.78(a)(5)(ii). In addition, the petition under 37 CFR §§ 1.78(a)(3) and 1.78(a)(6) must be accompanied by:

(1) the reference required by 35 U.S.C. §§ 120 and 119(e) and 37 CFR §§ 1.78(a)(2)(i) and 1.78(a)(5)(i) of the prior-filed application, unless previously submitted;

(2) the surcharge set forth in § 1.17(t); and

(3) a statement that the entire delay between the date the claim was due under 37 CFR §§ 1.78(a)(2)(ii) and 1.78(a)(5)(ii) and the date the claim was filed was unintentional. The Director may require additional information where there is a question whether the delay was unintentional.

Additionally, the instant nonprovisional application must be pending at the time of filing of the reference to the prior-filed provisional application as required by 37 CFR 1.78(a)(5)(ii). Further,

the nonprovisional application claiming the benefit of the prior-filed provisional application must have been filed within twelve months of the filing date of the prior-filed provisional application. All the above requirements having been satisfied, the late claim for benefit of priority under 35 U.S.C. §§ 120 and 119(e) is accepted as being unintentionally delayed.

The granting of the petition to accept the delayed benefit claim to the prior-filed applications under 37 CFR §§ 1.78(a)(3) and 1.78(a)(6) should not be construed as meaning that this application is entitled to the benefit of the filing date of the prior-filed applications. In order for this application to be entitled to the benefit of the prior-filed applications, all other requirements under 35 U.S.C. §§120 and 1.78(a)(1) and (a)(2) and under 35 U.S.C. §119(e) and 37 CFR 1.78(a)(4) and (a)(5) must be met. Similarly, the fact that the corrected Filing Receipt accompanying this decision on petition includes the prior-filed applications should not be construed as meaning that applicant is entitled to the claim for benefit of priority to the prior-filed applications noted thereon. Accordingly, the examiner will, in due course, consider this benefit claim and determine whether the application is entitled to the benefit of the earlier filing date.

A corrected Filing Receipt, which includes the priority claim to the prior-filed applications, accompanies this decision on petition.

Any questions concerning this matter may be directed to Carl Friedman at (571) 272-6842. All other inquiries concerning either the examination procedures or status of the application should be directed to the Technology Center.

This application is being forwarded to Technology Center Art Unit 1794 for consideration by the examiner of the claim under 35 U.S.C. § §120 and 119(e) of the prior-filed nonprovisional and provisional applications.

David Bucci
Petitions Examiner
Office of Petitions

ATTACHMENT : Corrected Filing Receipt

UNITED STATES PATENT AND TRADEMARK OFFICE

UNITED STATES DEPARTMENT OF COMMERCE
United States Patent and Trademark Office
Address: COMMISSIONER FOR PATENTS
P.O. Box 1450
Alexandria, Virginia 22313-1450
www.uspto.gov

APPLICATION NUMBER	FILING or 371(c) DATE	GRP ART UNIT	FIL FEE REC'D	ATTY.DOCKET.NO	TOT CLAIMS	IND CLAIMS
11/143,267	06/02/2005	1794	2360	9288 USA-NONP	30	3

CONFIRMATION NO. 8370

CORRECTED FILING RECEIPT

OC000000034999533

Gary F. Matz
NOVA Chemicals Inc.
Westpointe Center
1550 Coraopolis Heights Road
Moon Township, PA 15108

Date Mailed: 03/13/2009

Receipt is acknowledged of this non-provisional patent application. The application will be taken up for examination in due course. Applicant will be notified as to the results of the examination. Any correspondence concerning the application must include the following identification information: the U.S. APPLICATION NUMBER, FILING DATE, NAME OF APPLICANT, and TITLE OF INVENTION. Fees transmitted by check or draft are subject to collection. Please verify the accuracy of the data presented on this receipt. **If an error is noted on this Filing Receipt, please submit a written request for a Filing Receipt Correction. Please provide a copy of this Filing Receipt with the changes noted thereon. If you received a "Notice to File Missing Parts" for this application, please submit any corrections to this Filing Receipt with your reply to the Notice. When the USPTO processes the reply to the Notice, the USPTO will generate another Filing Receipt incorporating the requested corrections**

Applicant(s)

Steven Michael Krupinski, Pittsburgh, PA;
Charlie Ravagni, Lowell, MA;
Thomas J. Styranec, Poland, OH;
Richard Delaney JR., Lunenburg, MA;
Don Thomas Harris, Cranberry Township, PA;

Power of Attorney:
James Franks--42552
William Mitchell--30574
Gary Matz--45504

Domestic Priority data as claimed by applicant

This appln claims benefit of 60/650,992 02/08/2005
and is a CIP of 10/807,621 03/24/2004 PAT 7,294,676
which claims benefit of 60/489,773 07/24/2003

Foreign Applications

If Required, Foreign Filing License Granted: 07/06/2005

The country code and number of your priority application, to be used for filing abroad under the Paris Convention, is **US 11/143,267**

Projected Publication Date: Not Applicable

Non-Publication Request: No

Early Publication Request: No

Title

Foamed sheet containing a styrenic copolymer

Preliminary Class

428

PROTECTING YOUR INVENTION OUTSIDE THE UNITED STATES

Since the rights granted by a U.S. patent extend only throughout the territory of the United States and have no effect in a foreign country, an inventor who wishes patent protection in another country must apply for a patent in a specific country or in regional patent offices. Applicants may wish to consider the filing of an international application under the Patent Cooperation Treaty (PCT). An international (PCT) application generally has the same effect as a regular national patent application in each PCT-member country. The PCT process **simplifies** the filing of patent applications on the same invention in member countries, but **does not result** in a grant of "an international patent" and does not eliminate the need of applicants to file additional documents and fees in countries where patent protection is desired.

Almost every country has its own patent law, and a person desiring a patent in a particular country must make an application for patent in that country in accordance with its particular laws. Since the laws of many countries differ in various respects from the patent law of the United States, applicants are advised to seek guidance from specific foreign countries to ensure that patent rights are not lost prematurely.

Applicants also are advised that in the case of inventions made in the United States, the Director of the USPTO must issue a license before applicants can apply for a patent in a foreign country. The filing of a U.S. patent application serves as a request for a foreign filing license. The application's filing receipt contains further information and guidance as to the status of applicant's license for foreign filing.

Applicants may wish to consult the USPTO booklet, "General Information Concerning Patents" (specifically, the section entitled "Treaties and Foreign Patents") for more information on timeframes and deadlines for filing foreign patent applications. The guide is available either by contacting the USPTO Contact Center at 800-786-9199, or it can be viewed on the USPTO website at http://www.uspto.gov/web/offices/pac/doc/general/index.html.

For information on preventing theft of your intellectual property (patents, trademarks and copyrights), you may wish to consult the U.S. Government website, http://www.stopfakes.gov. Part of a Department of Commerce initiative, this website includes self-help "toolkits" giving innovators guidance on how to protect intellectual property in specific countries such as China, Korea and Mexico. For questions regarding patent enforcement issues, applicants may call the U.S. Government hotline at 1-866-999-HALT (1-866-999-4158).

LICENSE FOR FOREIGN FILING UNDER

Title 35, United States Code, Section 184

Title 37, Code of Federal Regulations, 5.11 & 5.15

GRANTED

The applicant has been granted a license under 35 U.S.C. 184, if the phrase "IF REQUIRED, FOREIGN FILING LICENSE GRANTED" followed by a date appears on this form. Such licenses are issued in all applications where the conditions for issuance of a license have been met, regardless of whether or not a license may be required as

set forth in 37 CFR 5.15. The scope and limitations of this license are set forth in 37 CFR 5.15(a) unless an earlier license has been issued under 37 CFR 5.15(b). The license is subject to revocation upon written notification. The date indicated is the effective date of the license, unless an earlier license of similar scope has been granted under 37 CFR 5.13 or 5.14.

This license is to be retained by the licensee and may be used at any time on or after the effective date thereof unless it is revoked. This license is automatically transferred to any related applications(s) filed under 37 CFR 1.53(d). This license is not retroactive.

The grant of a license does not in any way lessen the responsibility of a licensee for the security of the subject matter as imposed by any Government contract or the provisions of existing laws relating to espionage and the national security or the export of technical data. Licensees should apprise themselves of current regulations especially with respect to certain countries, of other agencies, particularly the Office of Defense Trade Controls, Department of State (with respect to Arms, Munitions and Implements of War (22 CFR 121-128)); the Bureau of Industry and Security, Department of Commerce (15 CFR parts 730-774); the Office of Foreign AssetsControl, Department of Treasury (31 CFR Parts 500+) and the Department of Energy.

NOT GRANTED

No license under 35 U.S.C. 184 has been granted at this time, if the phrase "IF REQUIRED, FOREIGN FILING LICENSE GRANTED" DOES NOT appear on this form. Applicant may still petition for a license under 37 CFR 5.12, if a license is desired before the expiration of 6 months from the filing date of the application. If 6 months has lapsed from the filing date of this application and the licensee has not received any indication of a secrecy order under 35 U.S.C. 181, the licensee may foreign file the application pursuant to 37 CFR 5.15(b).

UNITED STATES PATENT AND TRADEMARK OFFICE

Commissioner for Patents
United States Patent and Trademark Office
P.O. Box 1450
Alexandria, VA 22313-1450
www.uspto.gov

JOAN MARIE AMBROSE
2323 PENNERTON DRIVE
P.O. BOX 10366
GLENDALE, CA 91209

COPY MAILED

MAY 3 1 2006

OFFICE OF PETITIONS

In re Application of :
Joan Marie Ambrose :
Application No. 11/143,274 :
Filed: May 26, 2005 :
Attorney Docket No. N/A :

ON PETITION

This is a decision on the papers filed March 27, 2006, which have been treated as a petition under 37 CFR 1.181 to withdraw the holding of abandonment.

The petition is **dismissed**.

Any request for reconsideration of this decision must be submitted within TWO (2) MONTHS from the mail date of this decision. Extensions of time under 37 CFR 1.136(a) are permitted. The reconsideration request should include a cover letter entitled "Renewed Petition under 37 CFR 1.181."

The above-identified application became abandoned for failure to reply in a timely manner to the Notice to File Missing Parts of Application (Notice) mailed June 24, 2005. The Notice set a period for reply of two (2) months from the mail date of the Notice. No extensions of time under the provisions of 37 CFR 1.136(a) were obtained. Accordingly, the above-identified application became abandoned on August 25, 2005. A Notice of Abandonment was mailed on March 16, 2006.

Petitioner contends the Office communication was never received. The showing required to establish non-receipt of an Office communication must include a statement from the practitioner stating that the Office communication was not received by the practitioner and attesting to the fact that a search of the file jacket and docket records indicates that the Office communication was not received. A copy of the docket record where the non-received Office communication would have been entered had it been received and docketed must be attached to and referenced in practitioner's statement. See Withdrawing the Holding of Abandonment When Office Actions Are Not Received; Notice 1156 Off. Gaz. Pat. Office 53 (November 16, 1993) and MPEP 711.03(c). Pro Se applicants should submit documentary evidence of a similar nature.

The required copy of the docket record where the non-received Office communication would have been entered had it been received and docketed and referenced in practitioner's statement has not been submitted. As such, the petition must be dismissed.

Further correspondence with respect to this matter should be addressed as follows:

By mail: Mail Stop Petition
Commissioner for Patents
Box 1450
Alexandria, VA 22313

By FAX: (571) 273-8300
Attn: Office of Petitions

By hand: Customer Service Window
Randolph Building
401 Dulany Street
Alexandria, VA 22314

Telephone inquiries concerning this matter may be directed to the undersigned at (571) 272-3228.

Edward J. Tannouse
Petitions Attorney
Office of Petitions
Office of the Deputy Commissioner
for Patent Examination Policy

UNITED STATES PATENT AND TRADEMARK OFFICE

Commissioner for Patents
United States Patent and Trademark Office
P.O. Box 1450
Alexandria, VA 22313-1450
www.uspto.gov

Joan Marie Ambrose
2323 Pennerton Drive
P.O. Box 10366
Glendale CA 91209

COPY MAILED

MAR 1 5 2007

OFFICE OF PETITIONS

In re Application of :
Ambrose : DECISION ON PETITION
Application No. 11/143,274 :
Filed: May 26, 2005 :
Atty. Dkt. No.: STAR POWER :

This decision is in response to the renewed petition, filed June 30, 2006, under 37 CFR 1.181 to withdraw the holding of abandonment.

The petition under 37 CFR 1.181 to withdraw the holding of abandonment is hereby **GRANTED**.

This application was held abandoned August 25, 2005 for failure to timely submit a proper reply to the Notice to File Missing Parts of Nonprovisional Application (Notice) mailed June 24, 2005. The Notice set a two month shortened statutory period of time for reply. Notice of Abandonment was mailed March 16, 2006. A petition under 37 CFR 1.181 was filed March 27, 2006 and dismissed May 31, 2006.

Petitioner alleges non-receipt of the Notice mailed June 24, 2005.

In the absence of any irregularity in the mailing of the Notice, there is a strong presumption that the Notice was properly mailed to the address of record. This presumption may be overcome by a showing that the Notice was not in fact received. The showing required to establish non-receipt of an Office communication must include a statement from the applicant stating that the Office communication was not received and attesting to the fact that a search of the file jacket and docket records indicates that the Office communication was not received. A copy of the docket record where the non-received Office communication would have been entered had it been received and docketed must be attached to and referenced in practitioner's statement. *See*, MPEP 711.03(c). The showing outlined above may not be sufficient if there are circumstances that point to a conclusion that the Office communication may

have been lost after receipt rather than a conclusion that the Office communication was lost in the mail.

Office records indicate the Office communication was properly mailed to the correspondence address of record at the time of mailing. Accordingly, there was no irregularity in mailing the Office communication on the part of the United States Patent and Trademark Office.

The arguments and supporting documentation presented have been carefully considered and support the conclusion that the Notice was not received.

In view thereof the Notice of Abandonment is hereby **VACATED** and the holding of abandonment is **WITHDRAWN**.

The application file is being forwarded to the Office of Initial Patent Examination for further processing and a determination of the sufficiency of the response to the Notice submitted March 27, 2006.

Telephone inquiries concerning this matter may be directed to the undersigned at (571) 272-3205.

Alesia M. Brown
Petitions Attorney
Office of Petitions

UNITED STATES PATENT AND TRADEMARK OFFICE

COMMISSIONER FOR PATENTS
UNITED STATES PATENT AND TRADEMARK OFFICE
P.O. BOX 1450
ALEXANDRIA, VA 22313-1450
WWW.USPTO.GOV

Paper No.

COPY MAILED
SEP 15 2008

Joan Marie Ambrose
P.O. Box 1173
Corona Del Mar CA 92625

In re Application of	:	DECISION ON PETITION
Joan Marie Ambrose	:	PURSUANT TO
Application No. 11/143,274	:	37 C.F.R. § 1.181
Filed: May 26, 2005	:	
Title: STAR POWER	:	

This is a decision on the petition filed on June 9, 2008, pursuant to 37 C.F.R. § 1.181, requesting that the holding of abandonment in the above-identified application be withdrawn.

This petition is **DISMISSED**.

The concurrently submitted request to change the correspondence address has been entered and made of record.

BACKGROUND

The above-identified application became abandoned for failure to reply in a timely manner to the non-final Office action, mailed June 14, 2007, which set a shortened statutory period for reply of three months. A response was received on September 17, 2007, but an extension of time under the provisions of 37 C.F.R. § 1.136(a) was not included. Accordingly, the above-identified application became abandoned on September 15, 2007. A notice of abandonment was mailed on April 17, 2008.

RELEVANT PORTIONS OF THE C.F.R. AND MPEP

MPEP § 502.03(V): Interviews (Article 8).

Internet e-mail shall NOT be used to conduct an exchange of communications similar to those exchanged during telephone or personal interviews unless a written authorization has been given under Patent Internet Usage Policy Article 5 to use Internet e-mail. In such cases, a paper copy of the Internet e-mail contents MUST be made and placed in the patent application file, as required by the Federal Records Act, in the same manner as an Examiner Interview Summary Form is entered.

37 C.F.R. § 1.2 Business to be transacted in writing.

All business with the Patent and Trademark Office should be transacted in writing. The personal attendance of applicants or their attorneys or agents at the Patent and Trademark Office is unnecessary. The action of the Patent and Trademark Office will be based exclusively on the written record in the Office. No attention will be paid to any alleged oral promise, stipulation, or understanding in relation to which there is disagreement or doubt.

37 C.F.R. § 1.134: Time period for reply to an Office action.

An Office action will notify the applicant of any non-statutory or shortened statutory time period set for reply to an Office action. Unless the applicant is notified in writing that a reply is required in less than six months, a maximum period of six months is allowed.

37 C.F.R. § 1.135: Abandonment for failure to reply within time period.

(a) If an applicant of a patent application fails to reply within the time period provided under § 1.134 and § 1.136, the application will become abandoned unless an Office action indicates otherwise.
(b) Prosecution of an application to save it from abandonment pursuant to paragraph (a) of this section must include such complete and proper reply as the condition of the application may require. The admission of, or refusal to admit, any amendment after final rejection or any amendment not responsive to the last action, or any related proceedings, will not operate to save the application from abandonment.
(c) When reply by the applicant is a bona fide attempt to advance the application to final action, and is substantially a complete reply to the non-final Office action, but consideration of some matter or compliance with some requirement has been inadvertently omitted, applicant may be given a new time period for reply under § 1.134 to supply the omission.

ANALYSIS

This application went abandoned for a single reason. A non-final Office action was mailed on June 14, 2007 (first Office action), which set a shortened statutory period for reply of three months. As such, a response was due no later than September 14, 2007. A response was received on September 17, 2007. The response does not contain a certificate of mailing, and no extensions of time under the provisions of 37 C.F.R. § 1.136(a) were requested. Accordingly, Petitioner **failed to respond to the first Office action in a timely manner**, and consequently, this application became abandoned by operation of law on September 15, 2007, pursuant to 37 C.F.R. § 1.135(a), reproduced above.

Any Office action or correspondence received with respect to this application that was mailed after the date of abandonment does not remove the fact that this application is abandoned. In this regard, the non-final Office action mailed September 24, 2007 (second Office action), after the date of abandonment, is hereby **VACATED**. The notice of abandonment mailed April 17, 2008, is hereby **RATIFIED**, albeit as being based upon the Office action mailed June 14, 2007.

As set forth in 37 C.F.R. § 1.2, the business of the U.S. Patent and Trademark Office shall be conducted in writing. "No attention will be paid to any alleged oral promise, stipulation, or understanding in relation to which there is disagreement or doubt." Therefore, it is only the written response by Applicant or the mailing of a new Office action by the Examiner that will restart the period for reply. Such a response or Office action must be filed or mailed, respectively, within the period for response with any extension of time fees having been paid as appropriate. In no event may the period for response be extended beyond the six-month statutory period.

Pursuant to the above discussion, Applicant has not established that the holding of abandonment should be withdrawn.

CONCLUSION

Any reply to this decision must be submitted within **TWO MONTHS** from the mail date of this decision. Extensions of time under 37 C.F.R. § 1.136(a) are permitted.

The reply should include a cover letter entitled "Renewed Petition pursuant to 37 C.F.R. § 1.181(a)." This is not a final agency action within the meaning of 5 U.S.C § 704.

Petitioner may also file a petition pursuant to 37 C.F.R. §§ 1.137(a) and/or (b), which may be filed independently or concurrently with any renewed petition pursuant to 37 C.F.R. § 1.181.

Any submission in response to this decision should indicate in a prominent manner that the attorney handling this matter is Paul Shanoski, and may be submitted by mail[1], hand-delivery[2], or facsimile[3]. Registered users of EFS-Web may alternatively submit a response to this decision via EFS-Web[4].

If responding by mail, Petitioner is advised not to place the undersigned's name on the envelope. Only the information that appears in the footnote should be included - adding anything else to the address will delay the delivery of the response to the undersigned.

Telephone inquiries regarding *this decision* should be directed to the undersigned at (571) 272-3225[5]. All other inquiries concerning examination procedures or status of the application should be directed to the Technology Center.

/Paul Shanoski/
Paul Shanoski
Senior Attorney
Office of Petitions

---

1 Mail Stop Petition, Commissioner for Patents, United States Patent and Trademark Office, P.O. Box 1450, Alexandria, VA, 22313-1450.
2 Customer Window, Randolph Building, 401 Dulaney Street, Alexandria, VA, 22314.
3 (571) 273-8300- please note this is a central facsimile number.
4 https://sportal.uspto.gov/authenticate/authenticateuserlocalepf.html
5 Petitioner will note that all practice before the Office should be in writing, and the action of the Office will be based exclusively on the written record in the Office. See 37 C.F.R. § 1.2. As such, Petitioner is reminded that no telephone discussion may be controlling or considered authority for Petitioner's further action(s).

UNITED STATES PATENT AND TRADEMARK OFFICE

UNITED STATES DEPARTMENT OF COMMERCE
United States Patent and Trademark Office
Address: COMMISSIONER FOR PATENTS
P.O. Box 1450
Alexandria, Virginia 22313-1450
www.uspto.gov

INTELLECTUAL PROPERTY MANAGEMENT
BOEING MANAGEMENT COMPANY
P.O. BOX 2515
MAIL CODE 110-SD54
SEAL BEACH, CA 90740-1515

Mail Date: 04/20/2010

Applicant	: Chris H. Balsillie	: DECISION ON REQUEST FOR
Patent Number	: 7578474	: RECALCULATION of PATENT
Issue Date	: 08/25/2009	: TERM ADJUSTMENT IN VIEW
Appliction No	: 11/143,287	: OF WYETH AND NOTICE OF INTENT TO
Filed	: 06/02/2005	: ISSUE CERTIFICATE OF CORRECTION
		:

The Request for Recalculation is **GRANTED** to the extent indicated.

The patent term adjustment has been determined to be **502** days. The USPTO will *sua sponte* issue a certificate of correction reflecting the amount of PTA days determined by the recalculation.

Prior to the issuance of the certificate of correction, the USPTO will afford patentee an opportunity to be heard and request reconsideration. Accordingly, patentee has **one month or thirty (30) days**, whichever is longer, to file a request for reconsideration of this patent term adjustment calculation. See 35 U.S.C. 154(b)(3)(B)(ii) and 37 CFR 1.322(a)(4). No extensions of time will be granted under 37 CFR 1.136.

Patentee should use document code PET.OP if electronically filing a request for reconsideration of this patent term adjustment calculation. The patentee must also include the information required by 37 CFR 1.705(b)(2) and the fee required by 37 CFR 1.18(e). If patentee does not file a timely request for reconsideration of this patent term adjustment calculation including the information required by 37 CFR 1.705(b)(2) and the fee required by 37 CFR 1.18(e), the USPTO will issue a certificate of correction reflecting the PTA determination noted above.

Patentee should be aware that in order to preserve the right to review in the United States District Court for the District of Columbia of the USPTO patent term adjustment determination, patentee must ensure that he or she also take the steps required under 35 U.S.C. 154(b)(4)(A) in a timely manner. Nothing in the request for recalculation should be construed as providing an alternative time frame for commencing a civil action under 35 U.S.C. 154(b)(4)(A).

Any questions concerning this decision should be directed to the Office of Patent Legal Administration at 571-272-7702.

UNITED STATES PATENT AND TRADEMARK OFFICE

UNITED STATES DEPARTMENT OF COMMERCE
United States Patent and Trademark Office
Address: COMMISSIONER FOR PATENTS
P.O. Box 1450
Alexandria, Virginia 22313-1450
www.uspto.gov

KENYON & KENYON LLP
ONE BROADWAY
NEW YORK, NY 10004

Mail Date: 04/21/2010

Applicant	: Csaba Szabo	: DECISION ON REQUEST FOR
Patent Number	: 7589128	: RECALCULATION of PATENT
Issue Date	: 09/15/2009	: TERM ADJUSTMENT IN VIEW
Appliction No	: 11/143,312	: OF WYETH AND NOTICE OF INTENT TO
Filed	: 06/01/2005	: ISSUE CERTIFICATE OF CORRECTION
		:

The Request for Recalculation is **GRANTED** to the extent indicated.

The patent term adjustment has been determined to be **692** days. The USPTO will *sua sponte* issue a certificate of correction reflecting the amount of PTA days determined by the recalculation.

Prior to the issuance of the certificate of correction, the USPTO will afford patentee an opportunity to be heard and request reconsideration. Accordingly, patentee has **one month or thirty (30) days**, whichever is longer, to file a request for reconsideration of this patent term adjustment calculation. See 35 U.S.C. 154(b)(3)(B)(ii) and 37 CFR 1.322(a)(4). No extensions of time will be granted under 37 CFR 1.136.

Patentee should use document code PET.OP if electronically filing a request for reconsideration of this patent term adjustment calculation. The patentee must also include the information required by 37 CFR 1.705(b)(2) and the fee required by 37 CFR 1.18(e). If patentee does not file a timely request for reconsideration of this patent term adjustment calculation including the information required by 37 CFR 1.705(b)(2) and the fee required by 37 CFR 1.18(e), the USPTO will issue a certificate of correction reflecting the PTA determination noted above.

Patentee should be aware that in order to preserve the right to review in the United States District Court for the District of Columbia of the USPTO patent term adjustment determination, patentee must ensure that he or she also take the steps required under 35 U.S.C. 154(b)(4)(A) in a timely manner. Nothing in the request for recalculation should be construed as providing an alternative time frame for commencing a civil action under 35 U.S.C. 154(b)(4)(A).

Any questions concerning this decision should be directed to the Office of Patent Legal Administration at 571-272-7702.

SPE RESPONSE FOR CERTIFICATE OF CORRECTION

Paper No.: _____

DATE : 12/4/09

TO SPE OF : ART UNIT 1626

SUBJECT : Request for Certificate of Correction for Appl. No.: 11143334 Patent No.: 7345077

Please respond to this request for a certificate of correction within 7 days.

FOR IFW FILES:

Please review the requested changes/corrections as shown in the **COCIN** document(s) in the IFW application image. No new matter should be introduced, nor should the scope or meaning of the claims be changed.

Please complete the response (see below) and forward the completed response to scanning using document code **COCX**.

FOR PAPER FILES:

Please review the requested changes/corrections as shown in the attached certificate of correction. Please complete this form (see below) and forward it with the file to:

Certificates of Correction Branch (CofC)
Randolph Square – 9D10-A
Palm Location 7580

Certificates of Correction Branch

703-756-1573

Thank You For Your Assistance

The request for issuing the above-identified correction(s) is hereby:
Note your decision on the appropriate box.

XApproved	**All** changes apply.
❑ **Approved in Part**	Specify below which changes **do not** apply.
❑ **Denied**	State the reasons for denial below.

Comments: _____

/Joseph K. McKane/ — **SPE**

1626 — **Art Unit**

UNITED STATES PATENT AND TRADEMARK OFFICE

Commissioner for Patents
United States Patent and Trademark Office
P.O. Box 1450
Alexandria, VA 22313-1450
www.uspto.go

VOLPE AND KOENIG, P.C.
UNITED PLAZA, SUITE 1600
30 SOUTH 17TH STREET
PHILADELPHIA PA 19103

COPY MAILED

DEC 29 2006

OFFICE OF PETITIONS

In re Application of	:	
Viktor Lichtenwald et al.	:	
Application No. 11/143,343	:	DECISION ON PETITION
Filed: June 2, 2005	:	UNDER 37 CFR 1.55(c)
Attorney Docket No. **INA-PT125 (4418-18-US)**	:	

This is a decision on the petition filed April 27, 2006 under 37 CFR 1.78(a)(3) . As the petition references a claim for benefit of priority to a foreign application, the petition is being treated as a petition under 37 CFR 1.55(c) to accept an unintentionally delayed claim under 35 U.S.C. § 119(a)-(d) to foreign German Application No. DE 10 2004 026 863.0, filed June 2, 2004.

The petition is **DISMISSED**.

This application was filed after November 29, 2000, and did not include a reference to the foreign application, for which benefit is now sought, within the later of four months from the actual filing date of the application or sixteen months from the filing date of the prior foreign application. Since the claim for priority is submitted after the period specified in 37 CFR 1.55(a)(1)(i), this is an appropriate petition under the provisions of 37 CFR 1.55(c).

A petition under 37 CFR 1.55(c) to accept an unintentionally delayed claim for priority requires:

(1) The nonprovisional application claiming the benefit of an earlier filing date must be filed on or after November 29, 2000;
(2) the claim submitted with the petition must identify the prior foreign application for which priority is claimed, as well as any foreign application for the same subject matter and having a filing date before that of the application for which priority is claimed, by the application number, country, and the filing date, **and be included either in an oath or declaration (37 CFR 1.63(c)(2)) or in an Application Data Sheet (37 CFR 1.76(b)(6))**;
(3) the surcharge as set forth in 37 CFR 1.17(t);
(4) a statement that the entire delay between the date the claim was due under 37 CFR 1.55(a)(1) and the date the claim was filed was unintentional (the Director may require additional information where there is a question whether the delay was unintentional); and

(5) the above-identified nonprovisional application must be filed within 12 months of the filing date of the foreign application.

The petition fails to comply with item (2) above.

With regard to item (2), a review of the file record fails to disclose that the foreign priority information to Application No. DE 10 2004 026 863.0 was included in an oath or declaration or in an Application Data Sheet (ADS) in accordance with 37 CFR 1.76(b)(6). Unless provided in an ADS, 37 CFR 1.63(c)(2) requires that the oath or declaration must identify the foreign application for patent (or inventor's certificate) for which priority is claimed under 37 CFR 1.55, and any foreign application having a filing date before that of the application on which priority is claimed, by specifying the application number, country, day, month, and year of its filing. *Note* MPEP 201.14.

In view of the above, compliance with 37 CFR 1.63(c)(2) or 37 CFR 1.76(b)(6) must be satisfied if applicant desires to claim benefit of priority to the foreign application noted in the petition. Any future petition should include a cover letter and be entitled "Renewed Petition under 37 CFR 1.55(c)."

The rule at 37 CFR § 1.55(c) requires a statement that the entire delay between the date the claim was due under 37 CFR § 1.55(a)(1) and the date the claim was filed was unintentional. Since the statement appearing in the petition varies from the required language, the statement is being construed as the statement required by 37 CFR §1.55(c). If this is not a correct reading of the statement appearing in the petition, petitioner should promptly notify the Office.

Petitioner is advised that, while this application may seek a claim for benefit of priority to foreign Application No. DE 10 2004 026 863.0, filed June 2, 2004, since it was filed within one year of the filing date of the present application, a claim for benefit of priority to foreign Application No. DE 103 60 718.8, filed December 24, 2003 is improper since the present application was filed more than one year from the filing date of that foreign application. Accordingly, a reference under the foreign priority information to this application should not appear on the ADS or oath or declaration.

Further correspondence with respect to this matter should be addressed as follows:

By mail: Mail Stop PETITION
Commissioner for Patents
Post Office Box 1450
Alexandria, VA 22313-1450

By hand: Customer Service Window
Mail Stop Petitions
Randolph Building
40I Dulany Street
Alexandria, VA 22314

By fax: (571) 273-8300
ATTN: Office of Petitions

The renewed petition under 37 CFR 1.55(c) and oath or declaration or ADS may also be filed electronically by the Electronic Filing System(EFS).

Any inquiries directly pertaining to this matter may be directed to Senior Petitions Attorney Patricia Faison-Ball at (571) 272-3212.

Frances Hicks

Frances Hicks
Petitions Examiner
Office of Petitions

UNITED STATES PATENT AND TRADEMARK OFFICE

Commissioner for Patents
United States Patent and Trademark Office
P.O. Box 1450
Alexandria, VA 22313-1450
www.uspto.go

COPY MAILED

JUN 22 2007

OFFICE OF PETITIONS

VOLPE AND KOENIG, P.C.
UNITED PLAZA, SUITE 1600
30 SOUTH 17TH STREET
PHILADELPHIA PA 19103

In re Application of Viktor Lichtenwald et al. Application No. 11/143,343 Filed: June 2, 2005 Attorney Docket No. **INA-PT125 (4418-18-US)**	: : : : :	DECISION ON PETITION UNDER 37 CFR 1.55(c)

This is a decision on the renewed petition filed January 22, 2007 under 37 CFR 1.55(c) to accept an unintentionally delayed claim under 35 U.S.C. § 119(a)-(d) for the benefit of priority to foreign German Application No. DE 10 2004 026 863.0 filed June 2, 2004.

The petition is **DISMISSED**.

A petition under 37 CFR 1.55(c) to accept an unintentionally delayed claim for priority requires:

(1) The nonprovisional application claiming the benefit of an earlier filing date must be filed on or after November 29, 2000;
(2) the claim submitted with the petition must identify the prior foreign application for which priority is claimed, as well as any foreign application for the same subject matter and having a filing date before that of the application for which priority is claimed, by the application number, country, and the filing date, **and be included either in an oath or declaration (37 CFR 1.63(c)(2)) or in an Application Data Sheet (37 CFR 1.76(b)(6);**
(3) the surcharge as set forth in 37 CFR 1.17(t);
(4) a statement that the entire delay between the date the claim was due under 37 CFR 1.55(a)(1) and the date the claim was filed was unintentional. (The Director may require additional information where there is a question whether the delay was unintentional.); and
(5) the above-identified nonprovisional application must be filed within 12 months of the filing date of the foreign application.

On renewed petition, petitioner submits a supplemental Application Data Sheet, including the foreign priority claim. However, a supplemental ADS must be described

as supplemental and must be signed in compliance with 37 CFR 1.33(b). See MPEP 601.05. The supplemental ADS submitted is not signed and therefore, is unacceptable.

The petition still does not satisfy item (2) above.

Before the petition under 37 CFR 1.55(c) can be granted, a renewed petition and either a Supplemental Application Data Sheet (signed in compliance with 37 CFR 1.33(b) and in compliance with 37 CFR 1.76) or an oath or declaration (complying with the provisions of 37 CFR 1.63(c)(2)) to correct the above matters are required.

Further correspondence with respect to this matter should be addressed as follows:

By mail: Mail Stop PETITIONS
Commissioner for Patents
Post Office Box 1450
Alexandria, VA 22313-1450

By fax: (571) 273-8300
ATTN: Office of Petitions

Any inquiries concerning this decision may be directed to Senior Petitions Attorney Patricia Faison-Ball at (571) 272-3212.

Nancy Johnson
Senior Petitions Attorney
Office of Petitions

UNITED STATES PATENT AND TRADEMARK OFFICE

Commissioner for Patents
United States Patent and Trademark Office
P.O. Box 1450
Alexandria, VA 22313-1450
www.uspto.go

VOLPE AND KOENIG, P.C.
UNITED PLAZA, SUITE 1600
30 SOUTH 17TH STREET
PHILADELPHIA PA 19103

COPY MAILED

OCT 18 2007

OFFICE OF PETITIONS

In re Application of
Viktor Lichtenwald et al.
Application No. 11/143,343
Filed: June 2, 2005
Attorney Docket No. **INA-PT125 (4418-18-US)**

DECISION ON PETITION
UNDER 37 CFR 1.55(c)

This is a decision on the renewed petition filed July 20, 2007 under 37 CFR 1.78(a)(3). The petition is being properly treated under 37 CFR 1.55(c) to accept an unintentionally delayed claim under 35 U.S.C. § 119(a)-(d) for the benefit of priority to foreign German Application No. DE 10 2004 026 863.0.

The petition is **GRANTED**.

This pending nonprovisional application was filed after November 29, 2000, and did not include a reference to the foreign application, for which benefit is now sought; within the later of four months from the actual filing date of the application or sixteen months from the filing date of the prior foreign application. Since the claim for priority is submitted after the period specified in 37 CFR 1.55(a)(1)(i), this is an appropriate petition under the provisions of 37 CFR 1.55(c).

A petition under 37 CFR 1.55(c) to accept an unintentionally delayed claim for priority requires:

(1) The nonprovisional application claiming the benefit of an earlier filing date must be filed on or after November 29, 2000;

(2) the claim submitted with the petition must identify the prior foreign application for which priority is claimed, as well as any foreign application for the same subject matter and having a filing date before that of the application for which priority is claimed, by the application number, country, and the filing date and be included either in an oath or declaration (37 CFR 1.63(c)(2)) or in an Application Data Sheet (37 CFR 1.76(b)(6);

(3) the surcharge as set forth in 37 CFR 1.17(t);

(4) a statement that the entire delay between the date the claim was due under 37 CFR 1.55(a)(1) and the date the claim was filed was due under 37 CFR 1.55(a)(1) and the date the claim was filed was unintentional (the Director may require additional information where there is a question whether the delay was unintentional); and

(5) the above-identified nonprovisional application must be filed within 12 months of the filing date of the foreign application.

This application was filed on June 2, 2005, which is after November 29, 2000 and within 12 months of June 2, 2004 (the filing date of the foreign application to which benefit is now being claimed). On July 20, 2007, a signed Supplemental Application Data Sheet was received which identifies the foreign application for which priority is claimed by application number, country and filing date. The required petition fee of $ 1370.00 was received April 27, 2006. Lastly, petitioner has provided an adequate statement of unintentional delay.

Finally, it appears that any late claim for priority to Foreign Application DE 103 60 718.8 filed December 24, 2003 has been deleted. On the unsigned ADS on filing, petitioner noted but did not claim priority to Foreign Application DE 103 60 718.8. On unsigned ADS filed on initial petition, petitioner claimed priority to the foreign application. The ADS was not accepted because it was unsigned. The ADS filed with the instant petition deleted the claim. Thus, no claim under 37 CFR 1.55 has been entered. If it is petitioner's intention to claim priority to Foreign Application DE 103 60 718.8 a petition and fee under 37 CFR 1.55 will need to be filed.

All of the above requirements having been satisfied, the late claim for priority under 35 U.S.C. § 119(a)-(d) is accepted as being unintentionally delayed.

The granting of the petition to accept the delayed benefit claim to the prior-filed application under 37 CFR 1.55(c) should not be construed as meaning that this application is entitled to the benefit of the prior-filed application. In order for this application to be entitled to the benefit of the prior-filed application, all other requirements under 35 U.S.C. § 119(a)-(d) and 37 CFR 1.55(a)(1) must be met. Accordingly, the examiner will, in due course, consider this benefit claim and determine whether this application is entitled to the benefit of the earlier filing date.

This application is being referred to Technology Center AU 3748 for examination in due course and for consideration by the examiner of record of the foreign priority claim under 35 U.S.C. § 119(a)-(d).

Any inquiries directly pertaining to this matter may be directed to Senior Petitions Attorney Patricia Faison-Ball at (571) 272-3212.

Nancy Johnson
Senior Petitions Attorney
Office of Petitions

UNITED STATES PATENT AND TRADEMARK OFFICE

Commissioner for Patents
United States Patent and Trademark Office
P.O. Box 1450
Alexandria, VA 22313-1450
www.uspto.gov

JAN 31 2008

BUCKMAN AND ARCHER
1077 NOTRHERN BOULEVARD
ROSLYN, NY 11576

In re Application of:
FENG et al
Application Serial No.: 11/143,349
Filed: June 2, 2005
For: BOTTOM LIGHTING

DECISION ON PETITION FOR COLOR DRAWINGS
37 CFR 1.84(a)(2)

This is a decision is in response to the petition filed June 2, 2005 in the above-identified application. Petition requests that color drawings be accepted in accordance with 37 C.F.R. 1.84 (a)(2).

The petition states that Figures 1-10c are color drawings necessary because such drawings are the only practical medium by which to disclose the subject matter to be patented in a printed utility patent. The petition must include the following :(i) The appropriate fee set forth in §1.17 (h) and (ii) three sets of color drawings and The petition is further accompanied by an amendment which places the specification in compliance with the requirement set forth in 37 C.F.R. 1.84 (a)(2) (iii).

However, the papers filed on June 2, 2005 do **NOT** fulfill the requirements set forth in 37 C.F.R. 1.84 (a)(2) because Applicants failed to file three sets of color drawings and the amendment to the specification to insert the language as the first paragraph of the brief description of the drawings.

Accordingly, the petition is **DENIED**.

Jong-Suk (James) Lee
Supervisory Patent Examiner
Art Unit 2885

UNITED STATES PATENT AND TRADEMARK OFFICE

Commissioner for Patents
United States Patent and Trademark Office
P.O. Box 1450
Alexandria, VA 22313-1450
www.uspto.gov

FEB 21 2008

BUCKMAN AND ARCHER
1077 NOTRHERN BOULEVARD
ROSLYN, NY 11576

In re Application of:
FENG et al
Application Serial No.: 11/143,349
Filed: June 2, 2005
For: BOTTOM LIGHTING

DECISION ON PETITION FOR COLOR DRAWINGS
37 CFR 1.84(a)(2)

This is a decision is in response to the petition filed June 2, 2005 in the above-identified application. Petition requests that color drawings be accepted in accordance with 37 C.F.R. 1.84 (a)(2).

The petition states that Figures 1-10c are color drawings necessary because such drawings are the only practical medium by which to disclose the subject matter to be patented in a printed utility patent. The petition must include the following :(i) The appropriate fee set forth in §1.17 (h) and (ii) three sets of color drawings and The petition is further accompanied by an amendment which places the specification in compliance with the requirement set forth in 37 C.F.R. 1.84 (a)(2) (iii).

The three sets of color drawings and the amendment for the specification filed on January 28, 2008 do fulfill the requirements set forth in 37 C.F.R. 1.84 (a)(2) in addition to the papers filed June 5, 2005.

Accordingly, the petition is **GRANTED.**

The application has been forwarded to issue branch for processing into a patent.

Jong-Suk (James) Lee
Supervisory Patent Examiner
Art Unit 2885

UNITED STATES PATENT AND TRADEMARK OFFICE

COMMISSIONER FOR PATENTS
UNITED STATES PATENT AND TRADEMARK OFFICE
P.O. BOX 1450
ALEXANDRIA, VA 22313-1450
WWW.USPTO.GOV

Paper No. None

MORRIS MANNING & MARTIN LLP
1600 ATLANTA FINANCIAL CENTER
3343 PEACHTREE ROAD, NE
ATLANTA GA 30326-1044

COPY MAILED
AUG 0 3 2005
OFFICE OF PETITIONS

In re Application of	:	
Qi-Fei Fan et al.	:	
Application No. 11/143,360	:	DECISION ON PETITION
Filed: June 2, 2005	:	
Attorney Docket No.: 14963-50146	:	
Title: PORTABLE COMPUTER WITH	:	
HANDLE ATTACHED THERETO	:	

This is a decision on the petition filed June 28, 2005, requesting that the above-identified application, including page 6 of the specification, be accorded a filing date of June 2, 2005 as part of the original disclosure.

The application was deposited on June 2, 2005. However, on June 16, 2005, the Office of Initial Patent Examination (OIPE) mailed a "Notice of Omitted Item(s) in a Nonprovisional Application" (notice), stating that the application had been accorded a filing date, and advising applicants that page 6 of the specification appeared to have been omitted. The notice set a two-month period of reply.

In response, on June 28, 2005, applicants filed the present petition. The petition is further accompanied by a copy of page 6 of the specification, along with a copy of applicants' postcard receipt acknowledging receipt of "Nine (9) pgs of Specification (including Four (4) pages of Claims)" in the United States Patent and Trademark Office (Office) on June 2, 2005. Applicants request that page 6 of the specification be accorded a filing date of June 2, 2005.

It is noted that Electronic file contains 5 pages of spec, 3 pages of claims, and a 1 page abstract. Page 6 is missing, which is the first page of the claims.

Upon review of the record, the above-mentioned page has not been located among the application papers. However, the evidence is convincing that the application papers deposited on June 2, 2005

included page 6 of the specification, and this sheet was subsequently misplaced in the Office.

Therefore, the application, including page 6 of the specification, was complete on filing and entitled to a filing date of June 2, 2005 as part of the original disclosure.

Accordingly, the petition is **GRANTED**.

The notice mailed June 16, 2005 was sent in error, and is hereby **VACATED**. Therefore, no petition fee is necessary, and the petition fee will be refunded via the mailing of a Treasury Check in due course.

OIPE will be advised to process the application with a filing date of June 2, 2005, using the original application papers filed on that date, as well as page 6 of the specification submitted on June 28, 2005, and for noting in Office records that this page was present on filing.

Telephone inquiries regarding this decision should be directed to the undersigned at (571) 272-3225. All other inquiries concerning examination procedures or status of the application should be directed to the Technology Center.

Paul Shanoski
Senior Attorney
Office of Petitions
United States Patent and Trademark Office

UNITED STATES PATENT AND TRADEMARK OFFICE

Commissioner for Patents
United States Patent and Trademark Office
P.O. Box 1450
Alexandria, VA 22313-1450
www.uspto.gov

MAIL
JUL 17 2008
DIRECTOR'S OFFICE
TECHNOLOGY CENTER 2600

MCANDREWS HELD & MALLOY, LTD
500 WEST MADISON STREET
SUITE 3400
CHICAGO IL 60661

In re Application of
DESAI, PRASANNA, et. al.
Application No. 11/143378
Filed: June 2, 2005
Attorney Docket Number: **16040US02**
For: **METHOD AND SYSTEM FOR SHARING A SINGLE ANTENNA ON PLATFORMS WITH COLLOCATED BLUETOOTH AND IEEE 802.11 B/G DEVICES**

DECISION ON PETITION
UNDER 37 CFR 1.59

This is a response to the petition under 37 CFR 1.59(b), filed April 25, 2008, to expunge information from the above identified application.

The decision on the petition will be held in abeyance until allowance of the application or mailing of an *Ex Parte Quayle* action or a Notice of Abandonment, at which time the petition will be decided.

Petitioner requests that the proprietary material submitted March 20, 2007, be expunged from the record. Petitioner states that the information contains trade secret material, proprietary material and/or material that is subject to a protective order which has not been made public, and the information has not otherwise been made public. The petition fee set forth in 37 CFR 1.17(h) has been paid.

The decision on the petition is held in abeyance because prosecution on the merits is not closed. Accordingly, it is not appropriate to make a final determination of whether or not the material requested to be expunged is "material", with "materiality" being defined as any information which the examiner considers as being important to a determination of patentability of the claims. Thus, the decision on the petition to expunge must be held in abeyance at this time.

During prosecution on the merits, the examiner will determine whether or not the identified document is considered to be "material". If the information is not considered by the examiner to be material, the information will be returned to applicant.

The document in question will not be available to the public during prosecution.

/Eileen D. Lillis/

Eileen D. Lillis
Quality Assurance Specialist
Technology Center 2600
Communications

UNITED STATES PATENT AND TRADEMARK OFFICE

Commissioner for Patents
United States Patent and Trademark Office
P.O. Box 1450
Alexandria, VA 22313-1450
www.uspto.gov

MARSHALL, GERSTEIN & BORUN LLP (MICROSOFT)
233 SOUTH WACKER DRIVE
6300 SEARS TOWER
CHICAGO IL 60606

COPY MAILED

APR 0 9 2009

OFFICE OF PETITIONS

In re Application of	:	
Roberts et al.	:	
Application No. 11/143,385	:	ON PETITION
Filed: June 2, 2005	:	
Attorney Docket No. 30835/312154B	:	

This is a decision on the petition under 37 C.F.R. § 1.137(b), filed January 12, 2009, to revive the above-identified application.

The petition is **GRANTED**.

The petition satisfies the requirements of 37 CFR 1.137(b) in that petitioner has supplied (1) the reply in the form of a Request for Continued Examination (RCE) and an Amendment, (2) the petition fee, and (3) a proper statement of unintentional delay.

As the petitioner was only recently given Power of Attorney in the instant application, it is not apparent whether the statement of unintentional delay was signed by a person who would have been in a position of knowing that the entire delay in filing the required reply from the due date for the reply until the filing of a grantable petition pursuant to 37 CFR 1.137(b) was unintentional. Nevertheless, in accordance with 37 CFR 10.18, the statement is accepted as constituting a certification of unintentional delay. However, in the event that petitioner has no knowledge that the delay was unintentional, petitioner must make such an inquiry to ascertain that, in fact, the delay was unintentional. If petitioner discovers that the delay was intentional, petitioner must notify the Office.

Telephone inquiries concerning this decision should be directed to the undersigned at (571) 272-3206.

This matter is being referred to Technology Center AU 2618 for processing of the RCE under 37 CFR 1.114 filed concurrently with the instant petition.

Liana Walsh
Petitions Examiner
Office of Petitions

UNITED STATES PATENT AND TRADEMARK OFFICE

UNITED STATES DEPARTMENT OF COMMERCE
United States Patent and Trademark Office
Address: COMMISSIONER FOR PATENTS
P.O. Box 1450
Alexandria, Virginia 22313-1450
www.uspto.gov

MARSHALL, GERSTEIN & BORUN LLP (MICROSOFT)
233 SOUTH WACKER DRIVE
6300 WILLIS TOWER
CHICAGO, IL 60606

Mail Date: 04/21/2010

Applicant	: David A. Roberts	: DECISION ON REQUEST FOR
Patent Number	: 7616594	: RECALCULATION of PATENT
Issue Date	: 11/10/2009	: TERM ADJUSTMENT IN VIEW
Appliction No	: 11/143,385	: OF WYETH AND NOTICE OF INTENT TO
Filed	: 06/02/2005	: ISSUE CERTIFICATE OF CORRECTION
		:

The Request for Recalculation is **GRANTED** to the extent indicated.

The patent term adjustment has been determined to be **522** days. The USPTO will *sua sponte* issue a certificate of correction reflecting the amount of PTA days determined by the recalculation.

Prior to the issuance of the certificate of correction, the USPTO will afford patentee an opportunity to be heard and request reconsideration. Accordingly, patentee has **one month or thirty (30) days**, whichever is longer, to file a request for reconsideration of this patent term adjustment calculation. See 35 U.S.C. 154(b)(3)(B)(ii) and 37 CFR 1.322(a)(4). No extensions of time will be granted under 37 CFR 1.136.

Patentee should use document code PET.OP if electronically filing a request for reconsideration of this patent term adjustment calculation. The patentee must also include the information required by 37 CFR 1.705(b)(2) and the fee required by 37 CFR 1.18(e). If patentee does not file a timely request for reconsideration of this patent term adjustment calculation including the information required by 37 CFR 1.705(b)(2) and the fee required by 37 CFR 1.18(e), the USPTO will issue a certificate of correction reflecting the PTA determination noted above.

Patentee should be aware that in order to preserve the right to review in the United States District Court for the District of Columbia of the USPTO patent term adjustment determination, patentee must ensure that he or she also take the steps required under 35 U.S.C. 154(b)(4)(A) in a timely manner. Nothing in the request for recalculation should be construed as providing an alternative time frame for commencing a civil action under 35 U.S.C. 154(b)(4)(A).

Any questions concerning this decision should be directed to the Office of Patent Legal Administration at 571-272-7702.

UNITED STATES PATENT AND TRADEMARK OFFICE

Commissioner for Patents
United States Patent and Trademark Office
P.O. Box 1450
Alexandria, VA 22313-1450
www.uspto.gov

FINNEGAN, HENDERSON, FARABOW
GARRETT & DUNNER, LLP
901 NEW YORK AVENUE, NW
WASHINGTON, DC 20001-4413

MAILED

AUG 19 2009

OFFICE OF PETITIONS

In re Application of	:	
Sangho Shin, et al.	:	
Application No. 11/143,391	:	DECISION ON PETITION
Filed: June 1, 2005	:	TO WITHDRAW FROM
Attorney Docket No. 70107.63 (IDT-1935)	:	RECORD

This is a decision on the Request to Withdraw as attorney or agent of record under 37 CFR § 1.36(b), filed July 9, 2009.

The request is **NOT APPROVED**.

The request cannot be approved because practitioner/practitioners associated with Customer Number 22852 requesting the withdrawal have not certified that they have (1) given reasonable notice to the client, prior to the expiration of the reply period, that the practitioner(s) intends to withdraw from employment; (2) delivered to the client or duly authorized representative of the client papers and property (including funds) to which the client is entitled; and (3) notified the client of any responses that may be due and the time frame within which the client must respond. The failure to do so may subject the practitioner to discipline[1]. *See USPTO Form No. PTO/SB/83.*

It is noted that the assignee of record has requested that the application be transferred to another law firm. However, the present request cannot be approved since the assignee has failed to properly intervene in the above-identified application by filing the required Statement under 37 CFR 3.73(b)[2]. *See USPTO Form No. PTO/SB/96.*

Additionally, the Office will also no longer change the correspondence address to that of a new practitioner unless the Request is accompanied by a power of attorney to a new practitioner (e.g., Form PTO/SB/82).

---

[1] Practitioner should note that false certification may violate a practitioners' duty under 37 CFR 10.23(b)(4) and (b)(5).

[2] In order to request or take action in a patent matter, the assignee must establish its ownership of the patent to the satisfaction of the Director. In this regard, a Statement under 37 CFR 3.73(b) must have either: (i) documentary evidence of a chain of title from the original owner to the assignee (*e.g.*, copy of an executed assignment), and a statement affirming that the documentary evidence of the chain of title from the original owner to the assignee was or concurrently is being submitted for recordation pursuant to § 3.11; or (ii) a statement specifying where documentary evidence of a chain of title from the original owner to the assignee is recorded in the assignment records of the Office (*e.g.*, reel and frame number).

All future communications from the Office will continue to be directed to the above-listed address until otherwise notified by the applicant.

Telephone inquiries concerning this decision should be directed to undersigned at (571) 272-3226. All other inquiries concerning the examination or status of this application should be directed to the Technology Center.

Andrea Smith
Petitions Examiner
Office of Petitions

cc: HAYNES AND BOONE, LLP
IP SECTION
2323 VICTORY AVENUE
SUITE 700
DALLAS, TX 75219

UNITED STATES PATENT AND TRADEMARK OFFICE

Commissioner for Patents
United States Patent and Trademark Office
P.O. Box 1450
Alexandria, VA 22313-1450
www.uspto.gov

HAYNES AND BOONE, LLP
IP SECTION
2323 VICTORY AVENUE
SUITE 700
DALLAS, TX 75219

COPY MAILED

DEC 0 2 2009

OFFICE OF PETITIONS

In re Application of	:	
Sangho Shin, et al.	:	
Application No. 11/143,391	:	DECISION ON PETITION
Filed: June 1, 2005	:	TO WITHDRAW FROM
Attorney Docket No. 70107.63 (IDT-1935)	:	RECORD

This is a decision on the renewed Request to Withdraw as attorney or agent of record under 37 CFR §§ 1.36(b) or 10.40, filed October 6, 2009.

The request is **NOT APPROVED AS MOOT**.

A review of the file record indicates that the power of attorney to attorneys/agents associated with Customer Number 22852 has been revoked by the assignee of the patent application on November 12, 2009. Accordingly, the request to withdraw under 37 CFR § 1.36(b) is moot.

It is noted that the assignee's statement under 37 CFR 3.73(b) did not include the language that "[t]he undersigned (whose title is supplied below) is authorized to act on behalf of the assignee". However, the Office has acknowledged and will construe the title "VP, General Counsel" associated with the person who signed the power of attorney as having apparent authority to sign on behalf of the assignee. *See MPEP § 324(V)(A)*.

All future communications from the Office will be directed to the above-listed address until otherwise notified by the applicant.

This application is being referred to Technology Center Art Unit 2186 for review of the response filed on October 19, 2009.

Telephone inquiries concerning this decision should be directed to undersigned at (571) 272-3226. All other inquiries concerning the examination or status of this application should be directed to the Technology Center.

Andrea Smith
Petitions Examiner
Office of Petitions

cc: FINNEGAN, HENDERSON, FARABOW
GARRETT & DUNNER, LLP
901 NEW YORK AVENUE, NW
WASHINGTON, DC 20001-4413

UNITED STATES PATENT AND TRADEMARK OFFICE

Commissioner for Patents
United States Patent and Trademark Office
P.O. Box 1450
Alexandria, VA 22313-1450
www.uspto.gov

REED SMITH, LLP
TWO EMBARCADERO CENTER
SUITE 2000
SAN FRANCISCO CA 94111

COPY MAILED
OCT 1 0 2006
OFFICE OF PETITIONS

In re Application of	:	
Berman	:	
Application No. 11/143,408	:	DECISION ON PETITION
Filed: June 1, 2005	:	TO WITHDRAW
Attorney Docket No. 356508.05000	:	FROM RECORD
	:	

This is a decision on the Request to Withdraw as attorney or agent of record under 37 C.F.R. § 1.36(b), filed June 14, 2006.

The request is **APPROVED**.

A grantable request to withdraw as attorney/agent of record must be signed by every attorney/agent seeking to withdraw or contain a clear indication that one attorney is signing on behalf of another/others. A request to withdraw will not be approved unless at least 30 (thirty) days would remain between the date of approval and the later of the expiration date of a time to file a response or the expiration date of the maximum time period which can be extended under 37 C.F.R. § 1.136(a).

The request was signed by Doyle Johnson on behalf of all attorneys of record who are associated with this application.

All attorneys/agents associated with this application have been withdrawn.

Applicant is reminded that there is no attorney of record at this time.

The request to change the correspondence of record is not acceptable as the requested correspondence address is not that of: (1) the first named signing inventor; or (2) an intervening assignee of the entire interest under 37 C.F.R 3.71. All future communications from the Office will be directed to the first named signing inventor at the first copied address below until otherwise properly notified by the applicant.

In order to request or take action in a patent matter, the assignee must establish its ownership of the patent to the satisfaction of the Director. In this regard, a Statement under 37 CFR 3.73(b) must have either: (i) documentary evidence of a chain of title from the original owner to the assignee (*e.g.*, copy of an executed assignment), and a statement affirming that the documentary evidence of the chain of title from the original owner to the assignee was or concurrently is being submitted for recordation pursuant to § 3.11; or (ii) a statement specifying where documentary evidence of a chain of title from the original owner to the assignee is recorded in the assignment records of the Office (*e.g.*, reel and frame number).

Telephone inquiries concerning this decision should be directed to April Wise at 571-272-1642.

April M. Wise
Petitions Examiner
Office of Petitions

cc: ARTHUR BERMAN
5635 SNOWDON PLACE
SAN JOSE, CA 95138

cc: ARTHUR BERMAN
10440 BUBB ROAD
SUITE B
CUPERTINO, CA 95014

UNITED STATES PATENT AND TRADEMARK OFFICE

UNITED STATES DEPARTMENT OF COMMERCE
United States Patent and Trademark Office
Address: COMMISSIONER FOR PATENTS
P.O. Box 1450
Alexandria, Virginia 22313-1450
www.uspto.gov

APPLICATION NUMBER	FILING OR 371 (c) DATE	FIRST NAMED APPLICANT	ATTY. DOCKET NO./TITLE
11/143,408	06/01/2005	Arthur Berman	356508.05000

CONFIRMATION NO. 9862

OC000000020723757

OC000000020723757

58076
REED SMITH, LLP
TWO EMBARCADERO CENTER
SUITE 2000
SAN FRANCISCO, CA 94111

Date Mailed: 10/05/2006

NOTICE REGARDING CHANGE OF POWER OF ATTORNEY

This is in response to the Power of Attorney filed 06/14/2006.

- The withdrawal as attorney in this application has been accepted. Future correspondence will be mailed to the new address of record. 37 CFR 1.33.

April M Wise

APRIL M WISE
OP (571) 272-1642

FORMER ATTORNEY/AGENT COPY

UNITED STATES PATENT AND TRADEMARK OFFICE

Commissioner for Patents
United States Patent and Trademark Office
P.O. Box 1450
Alexandria, VA 22313-1450
www.uspto.gov

MAILED

JUN 18 2010

OFFICE OF PETITIONS

BURNS & LEVINSON, LLP
125 SUMMER STREET
BOSTON MA 02110

In re Application of	:	
Geffken, et al.	:	
Application No. 11/143,421	:	ON APPLICATION FOR
Filed: June 2, 2005	:	PATENT TERM ADJUSTMENT
Atty Docket No. 11460-135US	:	

This is in response to the REQUEST FOR RECONSIDERATION OF PATENT TERM ADJUSTMENT UNDER 37 C.F.R. § 1.704(b)," filed January 7, 2010. The request was amended on February 13, 2010. Applicants submit that the patent term adjustment to be indicated on the patent should be no less than four hundred thirty (430) days, not zero (0) days as calculated by the Office as of the mailing of the initial determination of patent term adjustment. Applicants request this correction on the basis that the Office will take in excess of three years to issue this patent.

In addition to the three year argument, applicants set forth expressly and impliedly three additional bases for correction of the patent term adjustment. First, applicants argue that pursuant to 37 CFR 1.702(a)(1), a period of adjustment of 70 days should be entered for the Office's alleged failure to mail at least one of a notification under 35 U.S.C. 132 or a notice of allowance under 35 U.S.C. 151 not later than fourteen months after the date on which the application was filed under 35 U.S.C. 111(a). Second, applicants argue that no reduction pursuant to 37 CFR 1.704(c)(7) should be charged against applicants in connection with filing a complete reply to the September 24, 2007 non-final Office Action. Third, applicants dispute a 6 day reduction for a delayed response to the October 11, 2006 non-final Office action.

To the extent that applicants request reconsideration of the patent term adjustment as it relates to the Office's failure to issue the patent within 3 years of the filing date, the application for patent term adjustment under 37 CFR 1.705(b) is **DISMISSED as PREMATURE**.

Knowledge of the actual date the patent issues is required to calculate the amount, if any, of additional patent term patentees are entitled to for Office failure to issue the patent within 3 years. See § 1.702(b). This is true even where a request for continued examination (RCE) was filed. The computer will not undertake the § 1.702(b) calculation until the actual date of issuance of the patent has been determined. Likewise, the computer will not calculate any further Office delay under § 1.702(a)(4) or applicant delay under § 1.704(c)(10) until the actual date of issuance of the patent has been determined. As such, the Office cannot make a determination on the correctness of the patent term adjustment until the patent has issued.

Requesting reconsideration of the patent term adjustment to be indicated on the patent under 37 CFR 1.705(b) based on the initial determination of patent term adjustment and a projected issuance date of the patent or even the filing date of the request for continued examination is premature. Accordingly, it is appropriate to dismiss as premature such a request.

Rather than file an application for patent term adjustment under 37 CFR 1.705(b) contesting the 37 CFR 1.702(b) calculation at the time of the mailing of the notice of allowance, applicants are advised that they may wait until the time of the issuance of the patent and file a request for reconsideration of the patent term adjustment pursuant to 37 CFR 1.705(d). As the USPTO does not calculate the amount of time earned pursuant to 37 CFR 1.702(b) until the time of the issuance of the patent, the Office will consider any request for reconsideration of the patent term adjustment due to an error in the calculation of 37 CFR 1.702(b) to be timely if the request for reconsideration is filed within two months of the issuance of the patent. However, as to all other bases for contesting the initial determination of patent term adjustment received with the notice of allowance, applicants must timely file an application for patent term adjustment prior to the payment of the issue fee[1].

---

[1] For example, if applicant disputes both the calculation of patent term adjustment under 37 CFR 1.702(a)(1) for Office failure to mail a first Office action or notice of allowance not later than fourteen months after the date on which the application was filed and under 37 CFR 1.702(b) for Office failure to issue a patent within three years of the actual filing date of the application, then applicant must still timely file an application for patent term adjustment prior to the payment of the issue fee to contest the calculation of Office delay in issuing a first Office action or notice of allowance. See 37 CFR 1.705(b) and 35 U.S.C. 154(b)(3)(B). A dispute as to the calculation of the §1.702(a)(1) period raised on request for

To the extent that applicants otherwise request correction of the initial determination of patent term adjustment (PTA), the application for patent term adjustment is **DISMISSED.**

Applicants argue that pursuant to 37 CFR 1.702(a)(1), a period of adjustment of 70 days should be entered for the Office's alleged failure to mail at least one of a notification under 35 U.S.C. 132 or a notice of allowance under 35 U.S.C. 151 not later than fourteen months after the date on which the application was filed under 35 U.S.C. 111(a). Applicants argue that the restriction requirement, mailed June 27, 2006, is not a notice issued as a result of examination conducted pursuant to 35 U.S.C. 131, and as such, is not a notification under 35 U.S.C. 132. The Office disagrees. A restriction requirement is an action within the meaning of 35 U.S.C. 132 that stops the clock for the 14 month calculation. The restriction requirement of June 27, 2006 was mailed within 14 months of the application's filing date. Therefore, no reduction pursuant to 37 CFR 1.702(a)(1)is warranted.

Next, applicants dispute the reduction of 104 days associated with filing a complete reply to the non-final Office action of September 24, 2007.

On September 24, 2007, the Office mailed a non-final Office action. On February 21, 2008, applicants filed a response to the September 24, 2007 non-final Office action. Pursuant to 37 CFR 1.704(b), a fifty-nine (59) day reduction was entered (December 25, 2007 to February 21, 2008). This reduction is not disputed by applicants. In an Office letter mailed May 21, 2008, the examiner states that the February 21, 2008 response was *bona fide*. However, it was deemed non-compliant.

A compliant amendment was filed on June 4, 2008.

Applicants request reinstatement of the 104 day period of reduction.

37 CFR 1.704(c)(7) establishes submission of a reply having an omission (37 CFR 1.135(c)) as a circumstance that constitutes a failure of an applicant to engage in reasonable efforts to conclude processing or examination of an application. Submitting a reply having an omission requires the Office to issue an

---

reconsideration of patent term adjustment under 37 CFR 1.705(d) will be dismissed as untimely filed.

action under 37 CFR 1.135(c) and await and process the applicant's reply to the action under 37 CFR 1.135(c) before the initial reply (as corrected) can be treated on its merits. In addition, 37 CFR 1.704(c)(7) provides that in such a case the period of adjustment set forth in 37 CFR 1.703 shall be reduced by the number of days, if any, beginning on the day after the date the reply having an omission was filed and ending on the date that the reply or other paper correcting the omission was filed.

On February 21, 2008, applicants filed a reply to the non-final Office action mailed September 24, 2007. This reply after non-final Office action was filed beyond the three-month period provided for in section 1.704(b). Accordingly, a 59 day period of Applicant Delay was entered pursuant to 37 CFR 1.704(b). However, by Notice mailed May 21, 2008, pursuant to 35 CFR 135(c), applicants were advised that the February 21, 2008 reply was non-compliant. The response correcting the omission was not filed until June 4, 2008. It is noted that applicants did not argue the propriety/merits of the May 21, 2008 Notice of Non-Compliant Amendment when the June 4, 2008 amendment was filed. The 104 day period is calculated beginning on the day after the date the initial reply was filed, February 22, 2008, and ending on the date that a complete reply was filed, June 4, 2008. Thus, entry of a period of reduction of 104 days pursuant to 37 CFR 1.704(c)(7) was warranted.

While not explicitly addressed in the instant request, it is noted that applicants have failed to include a 6 day reduction for a delayed response to the October 11, 2006 non-final Office action in their calculation of the patent term adjustment. A reply after non-final Office action was filed on January 17, 2007, beyond the three-month period provided for in section 1.704(b). Accordingly, a 6 day period of applicant delay was properly entered pursuant to 37 CFR 1.704(b)(January 12, 2006 to January 17, 2007).

In view thereof, the correct patent term adjustment at the time of mailing of the notice of allowance is **zero days** (0 days of Office delay - 228 Applicant delay (6+59+104+59).

The Office acknowledges receipt of the $200.00 fee set forth in 37 CFR 1.18(e). No additional fees are required.

Applicants are reminded that any delays by the Office pursuant to 37 CFR 1.702(a)(4) and 1.702(b) and any applicant delays under 37 CFR 1.704(c)(10) will be calculated at the time of the

issuance of the patent and applicants will be notified in the Issue Notification letter that is mailed to applicants approximately three weeks prior to issuance.

The Office of Data Management has been advised of this decision. This matter is being referred to the Office of Data Management for issuance of the patent.

Telephone inquiries specific to this decision should be directed to Shirene Willis Brantley, Senior Petitions Attorney, at (571) 272-3230.

Anthony Knight
Director
Office of Petitions

Enclosure: Copy of PALM screen

Day : Monday
Date: 5/31/2010

PALM INTRANET

Time: 09:13:36

PTA Calculations for Application: 11/143421			
Application Filing Date:	06/02/2005	PTO Delay (PTO):	0
Issue Date of Patent:		Three Years:	0
Pre-Issue Petitions:	0	Applicant Delay (APPL):	228
Post-Issue Petitions:	0	Total PTA (days):	0
PTO Delay Adjustment:	0		

File Contents History

Number	Date	Contents Description	PTO	APPL	START
90	10/09/2009	MAIL NOTICE OF ALLOWANCE			
89	10/08/2009	ISSUE REVISION COMPLETED			
88	10/08/2009	DOCUMENT VERIFICATION			
87	10/08/2009	NOTICE OF ALLOWANCE DATA VERIFICATION COMPLETED			
86	10/08/2009	CASE DOCKETED TO EXAMINER IN GAU			
85	10/05/2009	EXAMINER INTERVIEW SUMMARY RECORD (PTOL - 413)			
84	10/06/2009	EXAMINER'S AMENDMENT COMMUNICATION			
83	10/06/2009	NOTICE OF ALLOWABILITY			
82	09/28/2009	DATE FORWARDED TO EXAMINER			
81	09/23/2009	REQUEST FOR CONTINUED EXAMINATION (RCE)			
80	09/28/2009	DISPOSAL FOR A RCE / CPA / R129			
79	09/28/2009	DATE FORWARDED TO EXAMINER			
78	09/23/2009	AMENDMENT SUBMITTED/ENTERED WITH FILING OF CPA/RCE			
77	09/23/2009	WORKFLOW - REQUEST FOR RCE - BEGIN			
76	09/03/2009	MAIL ADVISORY ACTION (PTOL - 303)			
75	09/02/2009	ADVISORY ACTION (PTOL-303)			
74	08/29/2009	DATE FORWARDED TO EXAMINER			
73	08/28/2009	AMENDMENT AFTER FINAL REJECTION			
72	06/23/2009	MAIL FINAL REJECTION (PTOL - 326)			
71	06/19/2009	FINAL REJECTION			
70	03/02/2009	INFORMATION DISCLOSURE STATEMENT CONSIDERED			
69	03/02/2009	ELECTRONIC INFORMATION DISCLOSURE STATEMENT		0	67

68	04/16/2009	DATE FORWARDED TO EXAMINER			
67	03/02/2009	RESPONSE AFTER NON-FINAL ACTION		59	64
66	03/02/2009	REQUEST FOR EXTENSION OF TIME - GRANTED			
65	03/02/2009	INFORMATION DISCLOSURE STATEMENT (IDS) FILED			
64	10/02/2008	MAIL NON-FINAL REJECTION			
63	09/29/2008	NON-FINAL REJECTION			
58	07/01/2008	DATE FORWARDED TO EXAMINER			
57	06/04/2008	RESPONSE AFTER NON-FINAL ACTION		104	54
56	05/21/2008	MAIL NOTICE OF INFORMAL OR NON-RESPONSIVE AMENDMENT			
55	03/21/2008	DATE FORWARDED TO EXAMINER			
54.1	02/21/2008	INFORMAL OR NON-RESPONSIVE AMENDMENT AFTER EXAMINER ACTION			
54	02/21/2008	RESPONSE AFTER NON-FINAL ACTION		59	50
53	02/21/2008	REQUEST FOR EXTENSION OF TIME - GRANTED			
52	12/10/2007	CASE DOCKETED TO EXAMINER IN GAU			
51	10/04/2007	CASE DOCKETED TO EXAMINER IN GAU			
50	09/24/2007	MAIL NON-FINAL REJECTION			
49	09/17/2007	NON-FINAL REJECTION			
48	07/07/2007	DATE FORWARDED TO EXAMINER			
47	07/05/2007	RESPONSE AFTER NON-FINAL ACTION			
46	04/27/2007	MISCELLANEOUS INCOMING LETTER			
45	04/05/2007	MAIL NON-FINAL REJECTION			
44	04/02/2007	NON-FINAL REJECTION			
43	11/02/2006	INFORMATION DISCLOSURE STATEMENT CONSIDERED			
42	01/27/2007	DATE FORWARDED TO EXAMINER			
41	01/17/2007	RESPONSE AFTER NON-FINAL ACTION		6	38
40	11/02/2006	INFORMATION DISCLOSURE STATEMENT (IDS) FILED			
39	11/02/2006	INFORMATION DISCLOSURE STATEMENT (IDS) FILED			
38	10/11/2006	MAIL NON-FINAL REJECTION			
37	10/02/2006	NON-FINAL REJECTION			
36	07/21/2006	DATE FORWARDED TO EXAMINER			
35	07/17/2006	RESPONSE TO ELECTION / RESTRICTION FILED			

34	06/27/2006	MAIL RESTRICTION REQUIREMENT			
33	06/26/2006	REQUIREMENT FOR RESTRICTION / ELECTION			
19	10/31/2005	INFORMATION DISCLOSURE STATEMENT CONSIDERED			
18	03/20/2006	CASE DOCKETED TO EXAMINER IN GAU			
17	12/16/2005	IFW TSS PROCESSING BY TECH CENTER COMPLETE			
16	12/16/2005	CASE DOCKETED TO EXAMINER IN GAU			
15	10/31/2005	REFERENCE CAPTURE ON IDS			
14.7	10/31/2005	INFORMATION DISCLOSURE STATEMENT (IDS) FILED			
14	10/31/2005	INFORMATION DISCLOSURE STATEMENT (IDS) FILED			
13	08/31/2005	APPLICATION DISPATCHED FROM OIPE			
12	08/31/2005	APPLICATION IS NOW COMPLETE			
11	06/02/2005	CLAIM PRELIMINARY AMENDMENT			
8	08/22/2005	ADDITIONAL APPLICATION FILING FEES			
7	08/22/2005	A STATEMENT BY ONE OR MORE INVENTORS SATISFYING THE REQUIREMENT UNDER 35 USC 115, OATH OF THE APPLIC			
6	07/14/2005	NOTICE MAILED--APPLICATION INCOMPLETE--FILING DATE ASSIGNED			
5	06/30/2005	CLEARED BY L&R (LARS)			
4	06/13/2005	REFERRED TO LEVEL 2 (LARS) BY OIPE CSR			
3	06/13/2005	CASE CLASSIFIED BY OIPE			
2	06/09/2005	IFW SCAN & PACR AUTO SECURITY REVIEW			
1	06/02/2005	INITIAL EXAM TEAM NN			

Search Another: Application# [ ] Search

EXPLANATION OF PTA CALCULATION

EXPLANATION OF PTE CALCULATION

To go back, right click here and select Back. To go forward, right click here and select Forward. To refresh, right click here and select Refresh.

Back to OASIS | Home page

UNITED STATES PATENT AND TRADEMARK OFFICE

UNITED STATES DEPARTMENT OF COMMERCE
United States Patent and Trademark Office
Address: COMMISSIONER FOR PATENTS
P.O. Box 1450
Alexandria, Virginia 22313-1450
www.uspto.gov

STANZIONE & KIM, LLP
919 18TH STREET, N.W.
SUITE 440
WASHINGTON, DC 20006

Mail Date: 04/21/2010

Applicant	: Kyung-sun Min	: DECISION ON REQUEST FOR
Patent Number	: 7633556	: RECALCULATION of PATENT
Issue Date	: 12/15/2009	: TERM ADJUSTMENT IN VIEW
Appliction No	: 11/143,454	: OF WYETH AND NOTICE OF INTENT TO
Filed	: 06/03/2005	: ISSUE CERTIFICATE OF CORRECTION
		:

The Request for Recalculation is **GRANTED** to the extent indicated.

The patent term adjustment has been determined to be **1190** days. The USPTO will *sua sponte* issue a certificate of correction reflecting the amount of PTA days determined by the recalculation.

Prior to the issuance of the certificate of correction, the USPTO will afford patentee an opportunity to be heard and request reconsideration. Accordingly, patentee has **one month or thirty (30) days**, whichever is longer, to file a request for reconsideration of this patent term adjustment calculation. See 35 U.S.C. 154(b)(3)(B)(ii) and 37 CFR 1.322(a)(4). No extensions of time will be granted under 37 CFR 1.136.

Patentee should use document code PET.OP if electronically filing a request for reconsideration of this patent term adjustment calculation. The patentee must also include the information required by 37 CFR 1.705(b)(2) and the fee required by 37 CFR 1.18(e). If patentee does not file a timely request for reconsideration of this patent term adjustment calculation including the information required by 37 CFR 1.705(b)(2) and the fee required by 37 CFR 1.18(e), the USPTO will issue a certificate of correction reflecting the PTA determination noted above.

Patentee should be aware that in order to preserve the right to review in the United States District Court for the District of Columbia of the USPTO patent term adjustment determination, patentee must ensure that he or she also take the steps required under 35 U.S.C. 154(b)(4)(A) in a timely manner. Nothing in the request for recalculation should be construed as providing an alternative time frame for commencing a civil action under 35 U.S.C. 154(b)(4)(A).

Any questions concerning this decision should be directed to the Office of Patent Legal Administration at 571-272-7702.

UNITED STATES PATENT AND TRADEMARK OFFICE

UNITED STATES DEPARTMENT OF COMMERCE
United States Patent and Trademark Office
Address: COMMISSIONER FOR PATENTS
P.O. Box 1450
Alexandria, Virginia 22313-1450
www.uspto.gov

MCDERMOTT WILL & EMERY LLP
600 13TH STREET, NW
WASHINGTON, DC 20005-3096

Mail Date: 05/03/2010

Applicant	: Toshinobu Hatano	: DECISION ON REQUEST FOR
Patent Number	: 7656455	: RECALCULATION of PATENT
Issue Date	: 02/02/2010	: TERM ADJUSTMENT IN VIEW
Application No	: 11/143,481	: OF WYETH AND NOTICE OF INTENT TO
Filed	: 06/03/2005	: ISSUE CERTIFICATE OF CORRECTION
		:

The Request for Recalculation is **GRANTED** to the extent indicated.

The patent term adjustment has been determined to be **1262** days. The USPTO will *sua sponte* issue a certificate of correction reflecting the amount of PTA days determined by the recalculation.

Prior to the issuance of the certificate of correction, the USPTO will afford patentee an opportunity to be heard and request reconsideration. Accordingly, patentee has **one month or thirty (30) days**, whichever is longer, to file a request for reconsideration of this patent term adjustment calculation. See 35 U.S.C. 154(b)(3)(B)(ii) and 37 CFR 1.322(a)(4). No extensions of time will be granted under 37 CFR 1.136.

Patentee should use document code PET.OP if electronically filing a request for reconsideration of this patent term adjustment calculation. The patentee must also include the information required by 37 CFR 1.705(b)(2) and the fee required by 37 CFR 1.18(e). If patentee does not file a timely request for reconsideration of this patent term adjustment calculation including the information required by 37 CFR 1.705(b)(2) and the fee required by 37 CFR 1.18(e), the USPTO will issue a certificate of correction reflecting the PTA determination noted above.

Patentee should be aware that in order to preserve the right to review in the United States District Court for the District of Columbia of the USPTO patent term adjustment determination, patentee must ensure that he or she also take the steps required under 35 U.S.C. 154(b)(4)(A) in a timely manner. Nothing in the request for recalculation should be construed as providing an alternative time frame for commencing a civil action under 35 U.S.C. 154(b)(4)(A).

Any questions concerning this decision should be directed to the Office of Patent Legal Administration at 571-272-7702.

UNITED STATES PATENT AND TRADEMARK OFFICE

UNITED STATES DEPARTMENT OF COMMERCE
United States Patent and Trademark Office
Address: COMMISSIONER FOR PATENTS
P.O. Box 1450
Alexandria, Virginia 22313-1450
www.uspto.gov

RABIN & BERDO, P.C.
Suite 500
1101 14th Street, N.W.
Washington, DC 20005

Mail Date: 04/21/2010

Applicant	: Kang-Hung Liu	: DECISION ON REQUEST FOR
Patent Number	: 7641935	: RECALCULATION of PATENT
Issue Date	: 01/05/2010	: TERM ADJUSTMENT IN VIEW
Appliction No	: 11/143,487	: OF WYETH AND NOTICE OF INTENT TO
Filed	: 06/03/2005	: ISSUE CERTIFICATE OF CORRECTION
		:

The Request for Recalculation is **GRANTED** to the extent indicated.

The patent term adjustment has been determined to be **1221** days. The USPTO will *sua sponte* issue a certificate of correction reflecting the amount of PTA days determined by the recalculation.

Prior to the issuance of the certificate of correction, the USPTO will afford patentee an opportunity to be heard and request reconsideration. Accordingly, patentee has **one month or thirty (30) days**, whichever is longer, to file a request for reconsideration of this patent term adjustment calculation. See 35 U.S.C. 154(b)(3)(B)(ii) and 37 CFR 1.322(a)(4). No extensions of time will be granted under 37 CFR 1.136.

Patentee should use document code PET.OP if electronically filing a request for reconsideration of this patent term adjustment calculation. The patentee must also include the information required by 37 CFR 1.705(b)(2) and the fee required by 37 CFR 1.18(e). If patentee does not file a timely request for reconsideration of this patent term adjustment calculation including the information required by 37 CFR 1.705(b)(2) and the fee required by 37 CFR 1.18(e), the USPTO will issue a certificate of correction reflecting the PTA determination noted above.

Patentee should be aware that in order to preserve the right to review in the United States District Court for the District of Columbia of the USPTO patent term adjustment determination, patentee must ensure that he or she also take the steps required under 35 U.S.C. 154(b)(4)(A) in a timely manner. Nothing in the request for recalculation should be construed as providing an alternative time frame for commencing a civil action under 35 U.S.C. 154(b)(4)(A).

Any questions concerning this decision should be directed to the Office of Patent Legal Administration at 571-272-7702.

UNITED STATES PATENT AND TRADEMARK OFFICE

UNITED STATES DEPARTMENT OF COMMERCE
United States Patent and Trademark Office
Address: COMMISSIONER FOR PATENTS
P.O. Box 1450
Alexandria, Virginia 22313-1450
www.uspto.gov

CARR & FERRELL LLP
2200 GENG ROAD
PALO ALTO, CA 94303

Mail Date: 04/21/2010

Applicant	: Mark L. Major	: DECISION ON REQUEST FOR
Patent Number	: 7631650	: RECALCULATION of PATENT
Issue Date	: 12/15/2009	: TERM ADJUSTMENT IN VIEW
Appliction No	: 11/143,504	: OF WYETH AND NOTICE OF INTENT TO
Filed	: 06/02/2005	: ISSUE CERTIFICATE OF CORRECTION
		:

The Request for Recalculation is **GRANTED** to the extent indicated.

The patent term adjustment has been determined to be **336** days. The USPTO will *sua sponte* issue a certificate of correction reflecting the amount of PTA days determined by the recalculation.

Prior to the issuance of the certificate of correction, the USPTO will afford patentee an opportunity to be heard and request reconsideration. Accordingly, patentee has **one month or thirty (30) days**, whichever is longer, to file a request for reconsideration of this patent term adjustment calculation. See 35 U.S.C. 154(b)(3)(B)(ii) and 37 CFR 1.322(a)(4). No extensions of time will be granted under 37 CFR 1.136.

Patentee should use document code PET.OP if electronically filing a request for reconsideration of this patent term adjustment calculation. The patentee must also include the information required by 37 CFR 1.705(b)(2) and the fee required by 37 CFR 1.18(e). If patentee does not file a timely request for reconsideration of this patent term adjustment calculation including the information required by 37 CFR 1.705(b)(2) and the fee required by 37 CFR 1.18(e), the USPTO will issue a certificate of correction reflecting the PTA determination noted above.

Patentee should be aware that in order to preserve the right to review in the United States District Court for the District of Columbia of the USPTO patent term adjustment determination, patentee must ensure that he or she also take the steps required under 35 U.S.C. 154(b)(4)(A) in a timely manner. Nothing in the request for recalculation should be construed as providing an alternative time frame for commencing a civil action under 35 U.S.C. 154(b)(4)(A).

Any questions concerning this decision should be directed to the Office of Patent Legal Administration at 571-272-7702.

UNITED STATES PATENT AND TRADEMARK OFFICE

UNITED STATES DEPARTMENT OF COMMERCE
United States Patent and Trademark Office
Address: COMMISSIONER FOR PATENTS
P.O. Box 1450
Alexandria, Virginia 22313-1450
www.uspto.gov

THE PROCTER & GAMBLE COMPANY
Global Legal Department - IP
Sycamore Building - 4th Floor
299 East Sixth Street
CINCINNATI, OH 45202

Mail Date: 04/21/2010

Applicant	: Peter Jonathan Wyatt	: DECISION ON REQUEST FOR
Patent Number	: 7654271	: RECALCULATION of PATENT
Issue Date	: 02/02/2010	: TERM ADJUSTMENT IN VIEW
Appliction No	: 11/143,525	: OF WYETH AND NOTICE OF INTENT TO
Filed	: 06/02/2005	: ISSUE CERTIFICATE OF CORRECTION
		:

The Request for Recalculation is **GRANTED** to the extent indicated.

The patent term adjustment has been determined to be **568** days. The USPTO will *sua sponte* issue a certificate of correction reflecting the amount of PTA days determined by the recalculation.

Prior to the issuance of the certificate of correction, the USPTO will afford patentee an opportunity to be heard and request reconsideration. Accordingly, patentee has **one month or thirty (30) days**, whichever is longer, to file a request for reconsideration of this patent term adjustment calculation. See 35 U.S.C. 154(b)(3)(B)(ii) and 37 CFR 1.322(a)(4). No extensions of time will be granted under 37 CFR 1.136.

Patentee should use document code PET.OP if electronically filing a request for reconsideration of this patent term adjustment calculation. The patentee must also include the information required by 37 CFR 1.705(b)(2) and the fee required by 37 CFR 1.18(e). If patentee does not file a timely request for reconsideration of this patent term adjustment calculation including the information required by 37 CFR 1.705(b)(2) and the fee required by 37 CFR 1.18(e), the USPTO will issue a certificate of correction reflecting the PTA determination noted above.

Patentee should be aware that in order to preserve the right to review in the United States District Court for the District of Columbia of the USPTO patent term adjustment determination, patentee must ensure that he or she also take the steps required under 35 U.S.C. 154(b)(4)(A) in a timely manner. Nothing in the request for recalculation should be construed as providing an alternative time frame for commencing a civil action under 35 U.S.C. 154(b)(4)(A).

Any questions concerning this decision should be directed to the Office of Patent Legal Administration at 571-272-7702.

UNITED STATES PATENT AND TRADEMARK OFFICE

UNITED STATES DEPARTMENT OF COMMERCE
United States Patent and Trademark Office
Address: COMMISSIONER FOR PATENTS
P.O. Box 1450
Alexandria, Virginia 22313-1450
www.uspto.gov

THE PROCTER & GAMBLE COMPANY
Global Legal Department - IP
Sycamore Building - 4th Floor
299 East Sixth Street
CINCINNATI, OH 45202

Mail Date: 04/30/2010

Applicant	: Peter Jonathan Wyatt	: DECISION ON REQUEST FOR
Patent Number	: 7654271	: RECALCULATION of PATENT
Issue Date	: 02/02/2010	: TERM ADJUSTMENT IN VIEW
Application No	: 11/143,525	: OF WYETH AND NOTICE OF INTENT TO
Filed	: 06/02/2005	: ISSUE CERTIFICATE OF CORRECTION
		:

The Request for Recalculation is **GRANTED** to the extent indicated.

The patent term adjustment has been determined to be **568** days. The USPTO will *sua sponte* issue a certificate of correction reflecting the amount of PTA days determined by the recalculation.

Prior to the issuance of the certificate of correction, the USPTO will afford patentee an opportunity to be heard and request reconsideration. Accordingly, patentee has **one month or thirty (30) days**, whichever is longer, to file a request for reconsideration of this patent term adjustment calculation. See 35 U.S.C. 154(b)(3)(B)(ii) and 37 CFR 1.322(a)(4). No extensions of time will be granted under 37 CFR 1.136.

Patentee should use document code PET.OP if electronically filing a request for reconsideration of this patent term adjustment calculation. The patentee must also include the information required by 37 CFR 1.705(b)(2) and the fee required by 37 CFR 1.18(e). If patentee does not file a timely request for reconsideration of this patent term adjustment calculation including the information required by 37 CFR 1.705(b)(2) and the fee required by 37 CFR 1.18(e), the USPTO will issue a certificate of correction reflecting the PTA determination noted above.

Patentee should be aware that in order to preserve the right to review in the United States District Court for the District of Columbia of the USPTO patent term adjustment determination, patentee must ensure that he or she also take the steps required under 35 U.S.C. 154(b)(4)(A) in a timely manner. Nothing in the request for recalculation should be construed as providing an alternative time frame for commencing a civil action under 35 U.S.C. 154(b)(4)(A).

Any questions concerning this decision should be directed to the Office of Patent Legal Administration at 571-272-7702.

UNITED STATES PATENT AND TRADEMARK OFFICE

Commissioner for Patents
United States Patent and Trademark Office
P.O. Box 1450
Alexandria, VA 22313-1450
www.uspto.gov

SONNENSCHEIN NATH & ROSENTHAL LLP
P.O. BOX 061080
WACKER DRIVE STATION, SEARS TOWER
CHICAGO, IL 60606-1080

COPY MAILED

AUG 0 7 2007

OFFICE OF PETITIONS

In re Application of Jonathan Kahn, et al. Application No. 11/143,530 Filed: June 2, 2005 Attorney Docket No. 09761730-0015.002	DECISION ON PETITION TO WITHDRAW FROM RECORD

This is a decision on the Request to Withdraw as attorney or agent of record under 37 C.F.R. § 1.36(b) filed March 21, 2007.

The request is **APPROVED**.

A grantable request to withdraw as attorney/agent of record must be signed by every attorney/agent seeking to withdraw or contain a clear indication that one attorney is signing on behalf of another/others. A request to withdraw will not be approved unless at least 30 (thirty) days would remain between the date of approval and the later of the expiration date of a time to file a response or the expiration date of the maximum time period which can be extended under 37 C.F.R. § 1.136(a).

The request was signed by David R. Metzger on behalf of all attorneys of record who are associated with customer No. 26263.

All attorneys/agents associated with the Customer Number 26263 have been withdrawn.

Applicant is reminded that there is no attorney of record at this time.

The request to change the correspondence of record is not acceptable as the requested correspondence address is not that of: (1) the first named signing inventor; or (2) an intervening assignee of the entire interest under 37 C.F.R 3.71. All future communications from the Office will be directed to the first named signing inventor at the first copied address below until otherwise properly notified by the applicant.

In order to request or take action in a patent matter, the assignee must establish its ownership of the patent to the satisfaction of the Director. In this regard, a Statement under 37 CFR 3.73(b) must

have either: (i) documentary evidence of a chain of title from the original owner to the assignee (*e.g.*, copy of an executed assignment), and a statement affirming that the documentary evidence of the chain of title from the original owner to the assignee was or concurrently is being submitted for recordation pursuant to § 3.11; or (ii) a statement specifying where documentary evidence of a chain of title from the original owner to the assignee is recorded in the assignment records of the Office (*e.g.*, reel and frame number).

There is an outstanding Office actions mailed August 3, 2007 that requires a reply from applicant.

Telephone inquiries concerning this decision should be directed to undersigned at 571-272-1642.

April M. Wise
Petitions Examiner
Office of Petitions

cc: JONATHAN KAHN
1108 CHEYENNE DRIVE
CROWN POINT, IN 46307

cc: JORDAN A SIGALE
LOEB & LOEB, LLP
321 NORTH CLARK
SUITE 2300
CHICAGO, IL 60610

UNITED STATES PATENT AND TRADEMARK OFFICE

UNITED STATES DEPARTMENT OF COMMERCE
United States Patent and Trademark Office
Address: COMMISSIONER FOR PATENTS
P.O. Box 1450
Alexandria, Virginia 22313-1450
www.uspto.gov

APPLICATION NUMBER	FILING OR 371 (c) DATE	FIRST NAMED APPLICANT	ATTY. DOCKET NO./TITLE
11/143,530	06/02/2005	Jonathan Kahn	09761730-0015.002

CONFIRMATION NO. 9250

OC000000025198127

26263
SONNENSCHEIN NATH & ROSENTHAL LLP
P.O. BOX 061080
WACKER DRIVE STATION, SEARS TOWER
CHICAGO, IL 60606-1080

Date Mailed: 08/06/2007

NOTICE REGARDING CHANGE OF POWER OF ATTORNEY

This is in response to the Power of Attorney filed 03/21/2007.

- The withdrawal as attorney in this application has been accepted. Future correspondence will be mailed to the new address of record. 37 CFR 1.33.

Office of Initial Patent Examination (571) 272-4000, or 1-800-PTO-9199
FORMER ATTORNEY/AGENT COPY

UNITED STATES PATENT AND TRADEMARK OFFICE

Commissioner for Patents
United States Patent and Trademark Office
P.O. Box 1450
Alexandria, VA 22313-1450
www.uspto.gov

Howard J. Greenwald, P.C.
349 W. Commercial Street
Suite 2490
East Rochecter, NY 14445

COPY MAILED
JUL 21 2006
OFFICE OF PETITIONS

In re Application of	:	
Jack KOTOVSKY	:	
Application No. 11/143,543	:	DECISION ON PETITION
Filed: June 1, 2005	:	TO WITHDRAW
Attorney Docket No. IL-11313	:	FROM RECORD
	:	

This is a decision on the Request to Withdraw as attorney or agent under 37 C.F.R. § 1.36(b) or 37 C.F.R. § 10.40 filed September 30, 2005.

The request is **NOT APPROVED**.

A review of the file record indicates that Howard J Greenwald and attorneys associated with customer number 37282 do not have power of attorney in this patent application nor are there any statements or evidence of record of employment in or otherwise being engaged in the proceedings in this patent application. Accordingly, the request to withdraw under 37 C.F.R. § 1.36(b) is not applicable.

Please note that attorney docket number MPA-817 provided on request differs from that of record.

All future communications from the Office will continue to be directed to the below-listed address until otherwise properly notified by the applicant.

Telephone inquires concerning this decision should be directed to Monica Graves at 571-272-7253.

for David Bucci
Petitions Examiner
Office of Petitions

Conferee:

cc: Eddie E. Scott
Assistant Laboratory Counsel
Lawrence Livermore National Laboratory
P.O. Box 808, L-703
Livermore, CA 94551

cc: Michael L. Weiner
Advanced Resuscitation
150 Lucius Gordon Drive
Suite 215
West Henriette, NY 14568

UNITED STATES PATENT AND TRADEMARK OFFICE

UNITED STATES DEPARTMENT OF COMMERCE
United States Patent and Trademark Office
Address: COMMISSIONER FOR PATENTS
P.O. Box 1450
Alexandria, Virginia 22313-1450
www.uspto.gov

Lawrence Livermore National Security, LLC
LAWRENCE LIVERMORE NATIONAL LABORATORY
PO BOX 808, L-703
LIVERMORE, CA 94551-0808

Mail Date: 04/21/2010

Applicant	: Jack Kotovsky	: DECISION ON REQUEST FOR
Patent Number	: 7311009	: RECALCULATION of PATENT
Issue Date	: 12/25/2007	: TERM ADJUSTMENT IN VIEW
Appliction No	: 11/143,543	: OF WYETH
Filed	: 06/01/2005	:
		:

The Patentee's Request for Recalculation is **DISMISSED.**

This Request is deemed ineligible for consideration for one or more of the following reasons:

(A). The patent for which PTA recalculation is requested is either a design or reissue application or is a reexamination proceeding;

(B). The patent for which PTA recalculation is requested resulted from a utility or plant application filed under 35 USC 111(a) before May 29, 2000 and no CPA filed in the application on/after May 29, 2000;

(C). The patent for which PTA recalculation is requested resulted from an international application in which the international filing date was before May 29, 2000 and no CPA filed in the application on/after May 29, 2000;

(D). The patent for which PTA recalculation is requested issued on/after March 2, 2010;

(E). The Request for Recalculation was filed more than 180 days after the grant date of the patent and the request was not filed within two months of a dismissal of a request for reconsideration of the of the patent term under 37 CFR 1.705(d);

(F). The Request for Recalculation is not solely limited to USPTO pre-Wyeth interpretation of 35 U.S.C. 154(b)(2)(A);

or

(G). A civil action was filed pursuant to 35 U.S.C. 154(b)(4)(A)concerning the same patent at issue in this request.

Patentee may file a reply to this decision dismissing the Request for Recalculation. Patentee must file such reply within one month or thirty days, whichever is longer, of the mail date of the decision dismissing the Request for Recalculation. No fee is required if patentee is asserting in the reply that the dismissal for ineligibility is improper.

Patentee should use document code PET.OP if electronically filing a reply to this dismissal. If the USPTO finds that the request was improperly deemed ineligible, the USPTO will mail applicant a recalculation determination.

Patentee should be aware that in order to preserve the right to review in the United States District Court for the District of Columbia of the USPTO patent term adjustment determination, patentee must ensure that he or she also take the steps required under 35 U.S.C. 154(b)(4)(A). Nothing in the request for recalculation should be construed as providing an alternative time frame for commencing a civil action under 35 U.S.C. 154 (b)(4)(A).

Any questions concerning this decision should be directed to the Office of Patent Legal Administration at 571-272-7702.

UNITED STATES PATENT AND TRADEMARK OFFICE

Commissioner for Patents
United States Patent and Trademark Office
P.O. Box 1450
Alexandria, VA 22313-1450
www.uspto.gov

TYCO HEALTHCARE-EDWARD S. JARMOLOWICZ
15 HAMPSHIRE STREET
MANSFIELD, MA 02048

COPY MAILED

NOV 26 2007

OFFICE OF PETITIONS

In re Application of	:
Matthew J. Perry et al	:
Application No. 11/143,548	: DECISION GRANTING PETITION
Filed: June 2, 2005	: UNDER 37 CFR 1.313(c)(2)
Attorney Docket No. 1828 (1)K	:

This is a decision on the petition, filed November 21, 2007, under 37 CFR 1.313(c)(2) to withdraw the above-identified application from issue after payment of the issue fee.

The petition is **GRANTED**.

The above-identified application is withdrawn from issue for consideration of a submission under 37 CFR 1.114 (request for continued examination). See 37 CFR 1.313(c)(2).

Petitioner is advised that the issue fee paid on August 16, 2007 in the above-identified application cannot be refunded. If, however, the above-identified application is again allowed, petitioner may request that it be applied towards the issue fee required by the new Notice of Allowance.[1]

Telephone inquiries should be directed to the undersigned at (571) 272-3218.

This matter is being referred to Technology Center AU 3772 for processing of the request for continued examination under 37 CFR 1.114 and for consideration of the Information Disclosure Statement.

Frances Hicks
Petitions Examiner
Office of Petitions

C:\Documents and Settings\fhicks\My Documents\470\nov11\143548.wpd

---

[1] *The request to apply the issue fee to the new Notice may be satisfied by completing and returning the new Part B – Fee(s) Transmittal Form (along with any balance due at the time of submission). Petitioner is advised that the Issue Fee Transmittal Form* ***must*** *be completed and timely submitted to avoid abandonment.*

UNITED STATES PATENT AND TRADEMARK OFFICE

Commissioner for Patents
United States Patent and Trademark Office
P.O. Box 1450
Alexandria, VA 22313-1450
www.uspto.gov

HARNESS, DICKEY & PIERCE
P.O. BOX 828
BLOOMFIELD HILLS MI 48203

COPY MAILED

MAY 22 2007

OFFICE OF PETITIONS

ON PETITION

In re Application of	:	
Ryosuke Nakamura et al	:	
Application No. 11/143,553	:	
Filed: June 2, 2005	:	
Attorney Docket No. 9319S-001201	:	

This is a decision on the petition, filed May 18, 2007, under 37 CFR 1.313(c)(2) to withdraw the above-identified application from issue after payment of the issue fee.

The petition is **GRANTED.**

The above-identified application is withdrawn from issue for consideration of a submission under 37 CFR 1.114 (request for continued examination). See 37 CFR 1.313(c)(2).

Petitioner is advised that the issue fee paid on May 3, 2007 in the above-identified application cannot be refunded. If, however, the above-identified application is again allowed, petitioner may request that it be applied towards the issue fee required by the new Notice of Allowance.[1]

Telephone inquiries should be directed to the undersigned at (571) 272-3208.

The examiner of Technology Center AU 2874 will consider the request for continued examination under 37 CFR 1.114.

Karen Creasy

Karen Creasy
Petitions Examiner
Office of Petitions

---

[1] The request to apply the issue fee to the new Notice may be satisfied by completing and returning the new Issue Fee Transmittal Form PTOL-85(b), which includes the following language thereon: "Commissioner for Patents is requested to apply the Issue Fee and Publication Fee (if any) or re-apply any previously paid issue fee to the application identified above." Petitioner is advised that, whether a fee is indicated as being due or not, the Issue Fee Transmittal Form **must** be completed and timely submitted to avoid abandonment. Note the language in bold text on the first page of the Notice of Allowance and Fee(s) Due (PTOL-85).

UNITED STATES PATENT AND TRADEMARK OFFICE

Commissioner for Patents
United States Patent and Trademark Office
P.O. Box 1450
Alexandria, VA 22313-1450
www.uspto.gov

Paper No. None

COPY MAILED

SEP 22 2005

OFFICE OF PETITIONS

FRISHAUF, HOLTZ, GOODMAN & CHICK, PC
220 5TH AVE FL 16
NEW YORK NY 10001-7708

In re Application of
Hiroyuki Yanagisawa
Application No. 11/143,563
Filing Date: June 2, 2005
Attorney Docket No. 05351/HG
Title: PHOTOTHERMOGRAPHIC MATERIAL, DEVELOPMENT METHOD AND THERMAL DEVELOPMENT DEVICE THEREOF

DECISION ON PETITION UNDER 37 C.F.R. §1.10(D)

This is a decision on the petition under 37 C.F.R. §1.10(d), filed August 25, 2005, requesting the according of a filing date of June 2, 2005 to application number 11/143,563.

The application was deposited on June 2, 2005. Shortly thereafter, the Office mailed a filing receipt, indicating that application number 11/143,563 had been accorded a filing date of June 3, 2005.

With the present petition, Petitioner has included a copy of the Express Mail label number EV701317023[1].

Petitioner has alleged that the application was deposited on June 2, 2005, and the Patent Office has incorrectly assigned a filing date of June 3, 2005 to the instant application. Petitioner has included a copy of the Express Mail label, and it is noted that it bears a "date-in" of June 3, 2005. Petitioner has asserted that this information was incorrectly entered, and the field should indicate that the package was received by the USPS on June 2, 2005.

1 The Utility Patent Application Transmittal sheet has been located in the electronic file, and it is noted that it contains this same Express Mail label number.

A check of the Office's USPS Express Mail Finder Database computer program was inconclusive. A check of the United States Postal Service's website (http://www.usps.com/shipping/trackandconfirm.htm) was also inconclusive, in that it stated that the information pertaining to this Express Mail label number is stored off-line.

However, Petitioner has enclosed a print-out of this same website, presumably from prior to the information being taken off-line. This print-out shows an entry of "Acceptance, June 2, 2005. 6:34 pm, New York, New York, 10199." Thus, it is clear that the USPS had possession of this package on this date.

Although the application received a filing date of June 3, 2005, the evidence is convincing that the application papers were filed on June 2, 2005, and the Patent Office assigned the incorrect date to the application based on the incorrect entry which appears on the Express Mail label. Therefore, the application was entitled to a filing date of June 2, 2005.

Accordingly, the petition is **GRANTED**.

The application file is being returned to the Office of Initial Patent Examination for further processing with a filing date of June 2, 2005, as well as the mailing of a corrected filing receipt.

The general phone number for the Office of Petitions which should be used for status requests is (571) 272-3282. Telephone inquiries regarding this decision should be directed to the undersigned at (571) 272-3225.

Paul Shanoski
Senior Attorney
Office of Petitions
United States Patent and Trademark Office

UNITED STATES PATENT AND TRADEMARK OFFICE

Commissioner for Patents
United States Patent and Trademark Office
P.O. Box 1450
Alexandria, VA 22313-1450
www.uspto.gov

Date : June 5, 2007

Patent No. :7,208,997
Inventor(s) :Yasuyuki Sohara
Issued :April 24, 2007
Doc./File No. :050083-0225

Re: Request for Certificate of Correction

Consideration has been given your request for the issuance of a certificate of correction for the above identified patent.

Applicants' proposed request to change data within the Abstract, Item (57) is not warranted. The changes as presented in the Letters Patent is the result of a decision made by the examiner and is therefore considered in accordance with the records of the Patent and Trademark Office.

In view of the forgoing applicants' request in this matter is hereby denied.

Any inquiry concerning this communication should be directed to Ms. A. Green at (703) 308-9380 ext. 123.

Argol. Green

Cecelia Newman
Decisions & Certificates
of Correction Branch
(703) 308-9390 or (703) 308- 9380 Ext. 123

Stephen A. Becker
McDermott, Will & Emery LLP
600 13th Street, N.W.
Washington, DC 20005-3096

CBN/arg

UNITED STATES PATENT AND TRADEMARK OFFICE

Commissioner for Patents
United States Patent and Trademark Office
P.O. Box 1450
Alexandria, VA 22313-1450
www.uspto.gov

FOLEY AND LARDNER LLP
SUITE 500
3000 K STREET NW
WASHINGTON DC 20007

COPY MAILED

APR 1 3 2007

OFFICE OF PETITIONS

ON PETITION

In re Application of	:	
Hisayo Momose et al	:	
Application No. 11/143,594	:	
Filed: June 3, 2005	:	
Attorney Docket No. 016887-1120	:	

This is a decision on the petition, filed April 13, 2007, under 37 CFR 1.313(c)(2) to withdraw the above-identified application from issue after payment of the issue fee.

The petition is **GRANTED.**

The above-identified application is withdrawn from issue for consideration of a submission under 37 CFR 1.114 (request for continued examination). See 37 CFR 1.313(c)(2).

Petitioner is advised that the issue fee paid on March 6, 2007 in the above-identified application cannot be refunded. If, however, the above-identified application is again allowed, petitioner may request that it be applied towards the issue fee required by the new Notice of Allowance.[1]

Telephone inquiries should be directed to the undersigned at (571) 272-3208.

The examiner of Technology Center AU 2826 will consider the request for continued examination under 37 CFR 1.114.

Karen Creasy

Karen Creasy
Petitions Examiner
Office of Petitions

---

[1] The request to apply the issue fee to the new Notice may be satisfied by completing and returning the new Issue Fee Transmittal Form PTOL-85(b), which includes the following language thereon: "Commissioner for Patents is requested to apply the Issue Fee and Publication Fee (if any) or re-apply any previously paid issue fee to the application identified above." Petitioner is advised that, whether a fee is indicated as being due or not, the Issue Fee Transmittal Form **must** be completed and timely submitted to avoid abandonment. Note the language in bold text on the first page of the Notice of Allowance and Fee(s) Due (PTOL-85).

UNITED STATES PATENT AND TRADEMARK OFFICE

COMMISSIONER FOR PATENTS
UNITED STATES PATENT AND TRADEMARK OFFICE
P.O. BOX 1450
ALEXANDRIA, VA 22313-1450
www.uspto.gov

TROXELL LAW OFFICE PLLC
SUITE 1404
5205 LEESBURG PIKE
FALLS CHURCH, VA 22041

COPY MAILED

JAN 24 2007

OFFICE OF PETITIONS

In re Application of
Chiu-Chih Chung
Application No. 11/143,624
Filed: June 3, 2005
Attorney Docket No. BHT-3110-240

ON PETITION

This is a decision on the petition under 37 CFR 1.137(b) to revive the above-identified application, filed October 18, 2006.

The petition is **GRANTED**.

The application became abandoned for failure to pay the issue fee on or before July 18, 2006. A Notice of Abandonment was mailed on August 25, 2006. On October 16, 2006, the present petition was filed.

The petition satisfies the requirements of 37 CFR 1.137(b) in that petitioner has supplied (1) the reply in the form of the requisite issue/publication fee; (2) the petition fee of $750; and (3) an adequate statement of unintentional delay.

The application is being referred to the Office of Publications to be processed into a patent.

Telephone inquires related to this decision should be directed to the undersigned at (571) 272-3204. Telephone inquiries related to processing at Publishing Division should be directed to (571) 272-4200.

Sherry D. Brinkley
Petitions Examiner
Office of Petitions

UNITED STATES PATENT AND TRADEMARK OFFICE

Commissioner for Patents
United States Patent and Trademark Office
P.O. Box 1450
Alexandria, VA 22313-1450
www.uspto.gov

ARENT FOX LLP
1050 CONNECTICUT AVENUE, N.W.
SUITE 400
WASHINGTON DC 20036

COPY MAILED
SEP 02 2008

In re Application of	:	
Yonekawa	:	
Application No. 11/143,643	:	DECISION
Filed: 3 June, 2005	:	
Attorney Docket No. 024016-00127	:	

This is a decision on the petition filed on 15 May, 2008, considered as a petition under 37 C.F.R. §1.181 (no fee) requesting withdrawal of the holding of abandonment in the above-identified application

The petition under 37 C.F.R. §1.181 is **GRANTED**.

As to the Request to Withdraw
the Holding of Abandonment

A proper showing (for relief under 37 C.F.R. §1.181):

- (as to non-receipt) requires at the very minimum: a statement from practitioner stating that the Office action was not received by the practitioner; a statement from the practitioner attesting to the fact that a search of the file jacket and docket records for the application indicates that the Office action was not received with a copy of those docket records; and a brief statement of the calendaring process and a copy of the due-date (calendar) docket record(s) where the nonreceived Office action would have been scheduled for reply had it been received must be attached to and referenced in the practitioner's statement; alternatively,

- (for a showing of timely and proper reply) requires a statement from practitioner stating that the reply was timely submitted by the practitioner; and copies of all papers submitted as and/or in support of that reply, with/and a copy of the date-stamped receipt card, Office FAX receipt acknowledgement (not simply Petitioner's FAX transmittal), or EFS receipt acknowledgment from the Office, along with practitioner's attestation as to the correctness/completeness of his/her records.

The showing(s) must include that of the person(s) with first-hand knowledge and an acknowledgment by the Petitioner that he/she has reviewed that information in compliance with his/her duty of candor to the Office. Petitioner's attention is drawn to the guidance in the Commentary at MPEP §711.03(c).[1]

---

[1] The Commentary at MPEP §711.03(c) provides in pertinent part:

*****

I. PETITION TO WITHDRAW HOLDING OF ABANDONMENT

A petition to revive an abandoned application (discussed below) should not be confused with a petition from an examiner's holding of abandonment. Where an applicant contends that the application is not in fact abandoned (e.g., there is disagreement as to the sufficiency of the reply, or as to controlling dates), a petition under 37 CFR 1.181(a) requesting withdrawal of the holding of abandonment is the appropriate course of action, and such petition does not require a fee. Where there is no dispute as to whether an application is abandoned (e.g., the applicant's contentions merely involve the cause of abandonment), a petition under 37 CFR 1.137 (accompanied by the appropriate petition fee) is necessary to revive the abandoned application.

Two additional procedures are available for reviving an application that has become abandoned due to a failure to reply to an Office Action: (1) a petition under 37 CFR 1.137(a) based on unavoidable delay; and (2) a petition under 37 CFR 1.137(b) based on unintentional delay.

A. Petition To Withdraw Holding of Abandonment Based on Failure To Receive Office Action

In *Delgar v. Schulyer*, 172 USPQ 513 (D.D.C. 1971), the court decided that the Office should mail a new Notice of Allowance in view of the evidence presented in support of the contention that the applicant's representative did not receive the original Notice of Allowance. Under the reasoning of *Delgar*, an allegation that an Office action was never received may be considered in a petition to withdraw the holding of abandonment. If adequately supported, the Office may grant the petition to withdraw the holding of abandonment and remail the Office action. That is, the reasoning of *Delgar* is applicable regardless of whether an application is held abandoned for failure to timely pay the issue fee (35 U.S.C. 151) or for failure to prosecute (35 U.S.C. 133).

To minimize costs and burdens to practitioners and the Office, the Office has modified the showing required to establish nonreceipt of an Office action. The showing required to establish nonreceipt of an Office communication must include a statement from the practitioner **>describing the system used for recording an Office action received at the correspondence address of record with the USPTO. The statement should establish that the docketing system is sufficiently reliable. It is expected that the record would include, but not be limited to, the application number, attorney docket number, the mail date of the Office action and the due date for the response.

Practitioner must state that the Office action was not received at the correspondence address of record, and that a search of the practitioner's record(s), including any file jacket or the equivalent, and the application contents, indicates that the Office action was not received. A copy of the record(s) used by the practitioner where the non-received Office action would have been entered had it been received is required.

A copy of the practitioner's record(s) required to show non-receipt of the Office action should include the master docket for the firm. That is, if a three month period for reply was set in the nonreceived Office action, a copy of the master docket report showing all replies docketed for a date three months from the mail date of the nonreceived Office action must be submitted as documentary proof of nonreceipt of the Office action. If no such master docket exists, the practitioner should so state and provide other evidence such as, but not limited to, the following: the application file jacket; incoming mail log; calendar; reminder system; or the individual docket record for the application in question.<

The showing outlined above may not be sufficient if there are circumstances that point to a conclusion that the Office action may have been lost after receipt rather than a conclusion that the Office action was lost in the mail (e.g., if the practitioner has a history of not receiving Office actions).

Evidence of nonreceipt of an Office communication or action (e.g., Notice of Abandonment or an advisory action) other than that action to which reply was required to avoid abandonment would not warrant withdrawal of the holding of abandonment. Abandonment takes place by operation of law for failure to reply to an Office action or timely pay the issue fee, not by operation of the mailing of a Notice of Abandonment. See *Lorenz v. Finkl*, 333 F.2d 885, 889-90, 142 USPQ 26, 29-30 (CCPA 1964); *Krahn v. Commissioner*, 15 USPQ2d 1823, 1824 (E.D. Va 1990); *In re Application of Fischer*, 6 USPQ2d 1573, 1574 (Comm'r Pat. 1988).

B. Petition To Withdraw Holding of Abandonment Based on Evidence That a Reply Was Timely Mailed or Filed

37 CFR 1.10(c) through 1.10(e) and 1.10(g) set forth procedures for petitioning the Director of the USPTO to accord a filing date to correspondence as of the date of deposit of the correspondence as "Express Mail." A petition to withdraw the holding of abandonment relying upon a timely reply placed in "Express Mail" must include an appropriate petition under 37 CFR 1.10(c), (d), (e), or (g) (see MPEP § 513). When a paper is shown to have been mailed to the Office using the "Express Mail" procedures, the paper must be entered in PALM with the "Express Mail" date.

BACKGROUND

The record reflects as follows:

Petitioner failed to reply timely and properly to the non-final Office action mailed on 19 April, 2007, with reply due absent extension of time on or before 19 July, 2007.

The application went abandoned by operation of law after midnight 19 July, 2007.

The Office mailed the Notice of Abandonment on 10 April, 2008.

On 15 May, 2008, Petitioner filed the instant petition averring, *inter alia*, that a reply in the form of an amendment was filed on 11 May, 2007, and evidenced that with what was averred to be true copies of the date-stamped ("MAY 11 2007") receipt card and of the reply in the form of the amendment previously submitted.

(It is noted that there does not appear to a certificate of mailing/transmission under 37 C.F.R. §1.8 with/on the reply submitted.)

Out of an abundance of caution, Petitioners always are reminded that the filing of a petition under 37 C.F.R. §1.181 does not toll any periods that may be running any action by the Office and a petition seeking relief under the regulation must be filed within two (2) months of the act

---

Similarly, applicants may establish that a reply was filed with a postcard receipt that properly identifies the reply and provides *prima facie* evidence that the reply was timely filed. See MPEP § 503. For example, if the application has been held abandoned for failure to file a reply to a first Office action, and applicant has a postcard receipt showing that an amendment was timely filed in response to the Office action, then the holding of abandonment should be withdrawn upon the filing of a petition to withdraw the holding of abandonment. When the reply is shown to have been timely filed based on a postcard receipt, the reply must be entered into PALM using the date of receipt of the reply as shown on the post card receipt.

Where a certificate of mailing under 37 CFR 1.8, but not a postcard receipt, is relied upon in a petition to withdraw the holding of abandonment, see 37 CFR 1.8(b) and MPEP § 512. As stated in 37 CFR 1.8(b)(3) the statement that attests to the previous timely mailing or transmission of the correspondence must be on a personal knowledge basis, or to the satisfaction of the Director of the USPTO. If the statement attesting to the previous timely mailing is not made by the person who signed the Certificate of Mailing (i.e., there is no personal knowledge basis), then the statement attesting to the previous timely mailing should include evidence that supports the conclusion that the correspondence was actually mailed (e.g., copies of a mailing log establishing that correspondence was mailed for that application). When the correspondence is shown to have been timely filed based on a certificate of mailing, the correspondence is entered into PALM with the actual date of receipt (i.e., the date that the duplicate copy of the papers was filed with the statement under 37 CFR 1.8).

37 CFR 1.8(b) also permits applicant to notify the Office of a previous mailing or transmission of correspondence and submit a statement under 37 CFR 1.8(b)(3) accompanied by a duplicate copy of the correspondence when a reasonable amount of time (e.g., more than one month) has elapsed from the time of mailing or transmitting of the correspondence. Applicant does not have to wait until the application becomes abandoned before notifying the Office of the previous mailing or transmission of the correspondence. Applicant should check the private Patent Application Information Retrieval (PAIR) system for the status of the correspondence before notifying the Office. See MPEP §512.

C. Treatment of Untimely Petition To Withdraw Holding of Abandonment

37 CFR 1.181(f) provides that, *inter alia*, except as otherwise provided, any petition not filed within 2 months from the action complained of may be dismissed as untimely. Therefore, any petition (under 37 CFR 1.181) to withdraw the holding of abandonment not filed within 2 months of the mail date of a notice of abandonment (the action complained of) may be dismissed as untimely. 37 CFR 1.181(f).
Rather than dismiss an untimely petition to withdraw the holding of abandonment under 37 CFR 1.181(f), the Office may require a terminal disclaimer as a condition of granting an untimely petition to withdraw the holding of abandonment.

*****

complained of (*see*: 37 C.F.R. §1.181(f)), and that those registered to practice and all others who make representations before the Office are reminded to inquire into the underlying facts of representations made to the Office and support averments with the appropriate documentation–since all owe to the Office the continuing duty to disclose.[2]

The availability of applications and application papers online to applicants/practitioners who diligently associate their Customer Number with the respective application(s) now provides an applicant/practitioner on-demand information as to events/transactions in an application.

Allegations as to the Request to
Withdraw the Holding of Abandonment

The courts have determined the construct for properly supporting a petition seeking withdrawal of a holding of abandonment.[3] (*See*, also, the commentary at MPEP §711.03(c)(I)(A) and (B).) And the regulation requires that relief be sought within two (2) months of the act complained of.

Petitioner appears to have satisfied the showing required.

CONCLUSION

Accordingly, The petition under 37 C.F.R. §1.181 is **granted** and the 10 April, 2008, Notice of Abandonment is **vacated**.

The instant application is released to Technology Center/AU 2817 for further processing in due course.

Petitioner may find it beneficial to view Private PAIR within a fortnight of the instant decision to ensure that the revival has been acknowledged by the Technology Center/AU in response to this decision—and it is noted that all inquiries with regard to that change in status should be directed to the Technology Center/AU where that change of status must be effected.

---

[2] See supplement of 17 June, 1999. The Patent and Trademark Office is relying on Petitioner's duty of candor and good faith and accepting a statement made by Petitioner. See Changes to Patent Practice and Procedure, 62 Fed. Reg. at 53160 and 53178, 1203 Off. Gaz. Pat. Office at 88 and 103 (responses to comments 64 and 109)(applicant obligated under 37 C.F.R. §10.18 to inquire into the underlying facts and circumstances when providing statements to the Patent and Trademark Office).

[3] See: Delgar v. Schulyer, 172 USPQ 513 (D.D.C. 1971).

While telephone inquiries regarding this decision may be directed to the undersigned at (571) 272-3214, it is noted that all practice before the Office is in writing (see: 37 C.F.R. §1.2[4]) and the proper authority for action on any matter in this regard are the statutes (35 U.S.C.), regulations (37 C.F.R.) and the commentary on policy (MPEP). Therefore, no telephone discussion may be controlling or considered authority for Petitioner's action(s).

/John J. Gillon, Jr./
John J. Gillon, Jr.
Senior Attorney
Office of Petitions

[4] The regulations at 37 C.F.R. §1.2 provide:

§1.2 Business to be transacted in writing.

All business with the Patent and Trademark Office should be transacted in writing. The personal attendance of applicants or their attorneys or agents at the Patent and Trademark Office is unnecessary. The action of the Patent and Trademark Office will be based exclusively on the written record in the Office. No attention will be paid to any alleged oral promise, stipulation, or understanding in relation to which there is disagreement or doubt.

UNITED STATES PATENT AND TRADEMARK OFFICE

Commissioner for Patents
United States Patent and Trademark Office
P.O. Box 1450
Alexandria, VA 22313-1450
www.uspto.gov

ARENT FOX LLP
1050 CONNECTICUT AVENUE, N.W.
SUITE 400
WASHINGTON DC 20036

MAILED

MAR 06 2009

OFFICE OF PETITIONS

In re Patent No. 7,482,882	:	
Issue Date: January 27, 2009	:	
Application No. 11/143,643	:	ON PETITION
Filed: June 3, 2005	:	
Attorney Docket No. 024016-00127	:	

This is a decision on the petition filed February 6, 2009, which is being treated as a request under 37 CFR 3.81(b)[1] to correct the name of the assignee on the front page of the above-identified patent by way of a Certificate of Correction.

The request is **GRANTED**.

Telephone inquiries concerning this decision may be directed to the undersigned at (571) 272-3208. Inquiries regarding the issuance of a certificate of correction should be directed to the Certificate of Correction Branch at (571) 272-4200.

The Certificates of Correction Branch will be notified of this decision granting the petition under 37 CFR 3.81(b) and directing issuance of the requested Certificate of Correction.

Karen Creasy

Karen Creasy
Petitions Examiner
Office of Petitions

---

[1] *See* MPEP 1309, subsection II; and Official Gazette of June 22, 2004.

UNITED STATES PATENT AND TRADEMARK OFFICE

Commissioner for Patents
United States Patent and Trademark Office
P.O. Box 1450
Alexandria, VA 22313-1450
www.uspto.gov

RABIN & BERDO, PC
1101 14TH STREET, NW
SUITE 500
WASHINGTON, DC 20005

COPY MAILED

JAN 17 2008

OFFICE OF PETITIONS

In re Application of :
Eiji Takaara :
Application No. 11/143,651 : ON PETITION
Filed: June 3, 2005 :
Attorney Docket No. OKI 365D1

This is a decision on the petition, filed January 14, 2008 under 37 CFR 1.313(c)(2) to withdraw the above-identified application from issue after payment of the issue fee.

The petition is **GRANTED**.

The above-identified application is withdrawn from issue for consideration of a submission under 37 CFR 1.114 (request for continued examination). See 37 CFR 1.313(c)(2).

Petitioner is advised that the issue fee paid on December 27, 2007 in the above-identified application cannot be refunded. If, however, the above-identified application is again allowed, petitioner may request that it be applied towards the issue fee required by the new Notice of Allowance.[1]

Telephone inquiries should be directed to Irvin Dingle at (571) 272-3210.

This matter is being referred to Technology Center AU 2812 for processing of the request for continued examination under 37 CFR 1.114 and for consideration of the concurrently filed Information Disclosure Statement.

Irvin Dingle
Petitions Examiner
Office of Petitions

---

[1] The request to apply the issue fee to the new Notice may be satisfied by completing and returning the new Issue Fee Transmittal Form PTOL-85(b), which includes the following language thereon: Commissioner for Patents is requested to apply the Issue Fee and Publication Fee (if any) or re-apply any previously paid issue fee to the application identified above. Petitioner is advised that, whether a fee is indicated as being due or not, the Issue Fee Transmittal Form **must** be completed and timely submitted to avoid abandonment. Note the language in bold text on the first page of the Notice of Allowance and Fee(s) Due (PTOL-85).

UNITED STATES PATENT AND TRADEMARK OFFICE

UNITED STATES DEPARTMENT OF COMMERCE
United States Patent and Trademark Office
Address: COMMISSIONER FOR PATENTS
P.O. Box 1450
Alexandria, Virginia 22313-1450
www.uspto.gov

BACON & THOMAS, PLLC
625 SLATERS LANE
FOURTH FLOOR
ALEXANDRIA, VA 22314-1176

Mail Date: 07/13/2010

Applicant	: Kuo-Tai Wu	: DECISION ON REQUEST FOR
Patent Number	: 7643854	: RECALCULATION of PATENT
Issue Date	: 01/05/2010	: TERM ADJUSTMENT IN VIEW
Application No	: 11/143,668	: OF WYETH AND NOTICE OF INTENT TO
Filed	: 06/03/2005	: ISSUE CERTIFICATE OF CORRECTION
		:

The Request for Recalculation is **GRANTED** to the extent indicated.

The patent term adjustment has been determined to be **1251** days. The USPTO will *sua sponte* issue a certificate of correction reflecting the amount of PTA days determined by the recalculation.

Prior to the issuance of the certificate of correction, the USPTO will afford patentee an opportunity to be heard and request reconsideration. Accordingly, patentee has **one month or thirty (30) days**, whichever is longer, to file a request for reconsideration of this patent term adjustment calculation. See 35 U.S.C. 154(b)(3)(B)(ii) and 37 CFR 1.322(a)(4). No extensions of time will be granted under 37 CFR 1.136.

Patentee should use document code PET.OP if electronically filing a request for reconsideration of this patent term adjustment calculation. The patentee must also include the information required by 37 CFR 1.705(b)(2) and the fee required by 37 CFR 1.18(e). If patentee does not file a timely request for reconsideration of this patent term adjustment calculation including the information required by 37 CFR 1.705(b)(2) and the fee required by 37 CFR 1.18(e), the USPTO will issue a certificate of correction reflecting the PTA determination noted above.

Patentee should be aware that in order to preserve the right to review in the United States District Court for the District of Columbia of the USPTO patent term adjustment determination, patentee must ensure that he or she also take the steps required under 35 U.S.C. 154(b)(4)(A) in a timely manner. Nothing in the request for recalculation should be construed as providing an alternative time frame for commencing a civil action under 35 U.S.C. 154(b)(4)(A).

Any questions concerning this decision should be directed to the Office of Patent Legal Administration at 571-272-7702.

UNITED STATES PATENT AND TRADEMARK OFFICE

Commissioner for Patents
United States Patent and Trademark Office
P.O. Box 1450
Alexandria, VA 22313-1450
www.uspto.gov

AUSTIN RAPP & HARDMAN
170 South Main Street, Suite 735
SALT LAKE CITY UT 84101

COPY MAILED
JAN 1 1 2010

In re Application of	:	
R-Ming Hsu	:	
Application No. 11/143,674	:	DECISION ON PETITION
Filed: June 3, 2005	:	
Attorney Docket No. 3557.2.244	:	

This is a decision on the petition under the unintentional provisions of 37 CFR 1.137(b), filed November 3, 2009, to revive the above-identified application.

The petition is **GRANTED**.

The application became abandoned for failure to reply in a timely manner to the Notice of Non-Compliant Amendment (37 CFR 1.121), mailed December 12, 2008, which set a shortened statutory period for reply of one (1) month or thirty (30) days (whichever is later). No extensions of time under the provisions of 37 CFR 1.136(a) was obtained. Accordingly, the application became abandoned on January 13, 2009. The Notice of Abandonment was mailed August 18, 2009.

The petition satisfies the requirements of 37 CFR 1.137(b) in that petitioner has supplied (1) the reply in the form of an amendment, (2) the petition fee of $1,620, and (3) a proper statement of unintentional delay.

Telephone inquiries concerning this decision should be directed to Terri Johnson at (571) 272-2991.

This application is being referred to Technology Center AU 2183 for appropriate action by the Examiner in the normal course of business on the reply received.

Terri Johnson
Terri Johnson
Petitions Examiner
Office of Petitions

UNITED STATES PATENT AND TRADEMARK OFFICE

Commissioner for Patents
United States Patent and Trademark Office
P.O. Box 1450
Alexandria, VA 22313-1450
www.uspto.gov

JOHN J. YIM, ESQ.
4TH FLOOR
1750 TYSONS BLVD.
MCLEAN VA 22102

COPY MAILED

OCT 0 2 2007

OFFICE OF PETITIONS

In re Application of

ADAMS, Michael Shane
Application No. 11/143,679
Filed: June 03, 2005
Attorney Docket No. **MAdams-00002**

DECISION ON PETITION
TO WITHDRAW
FROM RECORD

This is a decision on the Request to Withdraw as attorney or agent of record under 37 C.F.R. § 1.36(b), filed August 24, 2007.

The request is **NOT APPROVED**.

A grantable request to withdraw as attorney/agent of record must be signed by every attorney/agent seeking to withdraw or contain a clear indication that one attorney is signing on behalf of another/others. A request to withdraw will not be approved unless at least 30 (thirty) days would remain between the date of approval and the later of the expiration date of a time to file a response or the expiration date of the maximum time period which can be extended under 37 C.F.R. § 1.136(a).

The Office cannot approve the request at this time since the reasons provided do not meet any of the conditions under the mandatory or permissive categories enumerated in 37 CFR 10.40. Section 10.40 of Title 37 of the Code of Federal Regulation states, "[a] practitioner shall not withdraw from employment in a proceeding before the Office without permission from the Office[.]" More specifically, 37 CFR 10.40 states, "[i]f paragraph (b) of this section is not applicable, a practitioner may not request permission to withdraw in matter pending before the Office unless such request or such withdrawal is" for one the permissive reasons listed in 37 CFR 10.40(c). The reasons set forth in the request, termination of representation, does not meet any of the conditions set forth in 37 CFR 10.40.

All future communications from the Office will continue to be directed to the above-listed address until otherwise notified by applicant.

Telephone inquiries concerning this decision should be directed to Tredelle Jackson at 571-272- 2783.

Monica A. Graves
Petitions Examiner
Office of Petitions

cc: **MICHAEL SHANE ADAMS**
1129 EAST MILADA DR.
PHOENIX, AZ 85042

UNITED STATES PATENT AND TRADEMARK OFFICE

Commissioner for Patents
United States Patent and Trademark Office
P.O. Box 1450
Alexandria, VA 22313-1450
www.uspto.gov

COPY MAILED

DEC 26 2007

OFFICE OF PETITIONS

JOHN J. YIM, ESQ.
4TH FLOOR
1750 TYSONS BLVD.
MCLEAN VA 22102

In re Application of	:	
ADAMS, Michael S.	:	
Application No. 11/143,679	:	DECISION ON PETITION
Filed: June 03, 2005	:	TO WITHDRAW
Attorney Docket No. **MAdams-00002**	:	FROM RECORD
	:	

This is a decision on the Request to Withdraw as attorney or agent of record under 37 C.F.R. § 1.36(b), filed October 29, 2007.

The request is **APPROVED**.

A grantable request to withdraw as attorney/agent of record must be signed by every attorney/agent seeking to withdraw or contain a clear indication that one attorney is signing on behalf of another/others. A request to withdraw will not be approved unless at least 30 (thirty) days would remain between the date of approval and the later of the expiration date of a time to file a response or the expiration date of the maximum time period which can be extended under 37 C.F.R. § 1.136(a).

The request was signed by John J. Yim, the sole attorney of record. John Yim has been withdrawn as attorney or agent of record. Applicant is reminded that there is no attorney of record at this time.

All future correspondence will be directed to the first named inventor Michael Adams at the address indicated below.

Telephone inquiries concerning this decision should be directed to Tredelle Jackson at 571-272-2783.

Monica A. Graves
Petitions Examiner
Office of Petitions

cc: **MICHAEL S. ADAMS**
1129 EAST MILADA DRIVE
PHOENIX, AZ 85042

UNITED STATES PATENT AND TRADEMARK OFFICE

Commissioner for Patents
United States Patent and Trademark Office
P.O. Box 1450
Alexandria, VA 22313-1450
www.uspto.gov

LAW OFFICE OF ANDREW P. LAHSER
13239 N. LA MONTANA
SUITE 215
FOUNTAIN HILLS AZ 85268

COPY MAILED

AUG 0 3 2009

OFFICE OF PETITIONS

In re Application of
Michael Shane Adams
Application No. 11/143,679
Filed: June 3, 2005
Attorney Docket No. 08-209

DECISION ON PETITION

This is a decision on the petition under the unintentional provisions of 37 CFR 1.137(b), filed June 15, 2009, to revive the above-identified application.

The petition is **GRANTED**.

The petition satisfies the conditions for revival pursuant to the provisions of 37 CFR 1.137(b) in that (1) the reply in the form of an amendment; (2) the petition fee; and (3) the required statement of unintentional delay have been received. Accordingly, the reply to the nonfinal rejection mailed October 15, 2008, is accepted as having been unintentionally delayed.

Telephone inquiries concerning this decision should be directed to the undersigned at (571) 272-3208.

This application is being referred to Technology Center AU 3629 for appropriate action by the Examiner in the normal course of business on the reply received June 15, 2009.

/KOC/
Karen Creasy
Petitions Examiner
Office of Petitions

UNITED STATES PATENT AND TRADEMARK OFFICE

Commissioner for Patents
United States Patent and Trademark Office
P.O. Box 1450
Alexandria, VA 22313-1450
www.uspto.gov

COPY MAILED

FEB 0 4 2008

OFFICE OF PETITIONS

JOHN YIM
JOHN J. YIM & ASSOCIATES, LLC
1750 TYSONS, BOULEVARD
4TH FOOOR
MCLEAN, VA 22102

In re Application of	:	
Michael Shane Adams	:	
Application No. 11/143,680	:	DECISION ON PETITION
Filed: June 3, 2005	:	TO WITHDRAW
Attorney Docket No. Madams-00001	:	FROM RECORD
	:	

This is a decision on the Request to Withdraw as attorney or agent of record under 37 C.F.R. § 1.36(b) filed August 24, 2007.

The request is **DISMISSED** as moot.

A review of the file record indicates that the power of attorney to John J. Yim & Associates has been revoked by the applicant of the patent application on December 18, 2007. Accordingly, the request to withdraw under 37 C.F.R. § 1.36(b) is moot.

All future communications from the Office will continue to be directed to the below-listed address until otherwise notified by applicant.

Telephone inquires concerning this decision should be directed to undersigned at 571-272- 1642.

April M. Wise
Petitions Examiner
Office of Petitions

cc: MICHAEL SHANE ADAMS
1129 EAST MILADA DR.
PHOENIX, AZ 85042

UNITED STATES PATENT AND TRADEMARK OFFICE

UNITED STATES DEPARTMENT OF COMMERCE
United States Patent and Trademark Office
Address: COMMISSIONER FOR PATENTS
P.O. Box 1450
Alexandria, Virginia 22313-1450
www.uspto.gov

APPLICATION NUMBER	FILING OR 371(C) DATE	FIRST NAMED APPLICANT	ATTY. DOCKET NO./TITLE
11/143,680	06/03/2005	Michael Shane Adams	MAdams-00001

CONFIRMATION NO. 1271

POA ACCEPTANCE LETTER

56680
LAW OFFICE OF ANDREW P. LAHSER, PLC
13239 N. LA MONTANA
SUITE 215
FOUNTAIN HILLS, AZ 85268

OC000000028086773

Date Mailed: 02/04/2008

NOTICE OF ACCEPTANCE OF POWER OF ATTORNEY

This is in response to the Power of Attorney filed 12/18/2007.

The Power of Attorney in this application is accepted. Correspondence in this application will be mailed to the above address as provided by 37 CFR 1.33.

/amwise/

Office of Initial Patent Examination (571) 272-4000 or 1-800-PTO-9199

UNITED STATES PATENT AND TRADEMARK OFFICE

UNITED STATES DEPARTMENT OF COMMERCE
United States Patent and Trademark Office
Address: COMMISSIONER FOR PATENTS
P.O. Box 1450
Alexandria, Virginia 22313-1450
www.uspto.gov

DICKSTEIN SHAPIRO LLP
1825 EYE STREET NW
Washington, DC 20006-5403

Mail Date: 07/07/2010

Applicant	: John Bogild Hansen	: DECISION ON REQUEST FOR
Patent Number	: 7641994	: RECALCULATION of PATENT
Issue Date	: 01/05/2010	: TERM ADJUSTMENT IN VIEW
Application No	: 11/143,708	: OF WYETH AND NOTICE OF INTENT TO
Filed	: 06/03/2005	: ISSUE CERTIFICATE OF CORRECTION
		:

The Request for Recalculation is **GRANTED** to the extent indicated.

The patent term adjustment has been determined to be **1211** days. The USPTO will *sua sponte* issue a certificate of correction reflecting the amount of PTA days determined by the recalculation.

Prior to the issuance of the certificate of correction, the USPTO will afford patentee an opportunity to be heard and request reconsideration. Accordingly, patentee has **one month or thirty (30) days**, whichever is longer, to file a request for reconsideration of this patent term adjustment calculation. See 35 U.S.C. 154(b)(3)(B)(ii) and 37 CFR 1.322(a)(4). No extensions of time will be granted under 37 CFR 1.136.

Patentee should use document code PET.OP if electronically filing a request for reconsideration of this patent term adjustment calculation. The patentee must also include the information required by 37 CFR 1.705(b)(2) and the fee required by 37 CFR 1.18(e). If patentee does not file a timely request for reconsideration of this patent term adjustment calculation including the information required by 37 CFR 1.705(b)(2) and the fee required by 37 CFR 1.18(e), the USPTO will issue a certificate of correction reflecting the PTA determination noted above.

Patentee should be aware that in order to preserve the right to review in the United States District Court for the District of Columbia of the USPTO patent term adjustment determination, patentee must ensure that he or she also take the steps required under 35 U.S.C. 154(b)(4)(A) in a timely manner. Nothing in the request for recalculation should be construed as providing an alternative time frame for commencing a civil action under 35 U.S.C. 154(b)(4)(A).

Any questions concerning this decision should be directed to the Office of Patent Legal Administration at 571-272-7702.

Newsome, Lamonte

From: Maguire, Lindsay M.
Sent: Wednesday, May 13, 2009 3:19 PM
To: Newsome, Lamonte
Cc: Abdi, Kambiz
Subject: RE: 11143710

Changes are OK with me.

From: Newsome, Lamonte
Sent: Wednesday, May 13, 2009 3:02 PM
To: Maguire, Lindsay M.
Cc: Abdi, Kambiz
Subject: 11143710

Paper No.: _____

DATE : 5/13/09

TO SPE OF : ART UNIT 3692

SUBJECT : Request for Certificate of Correction for Appl. No.: 11143710 Patent No.: 7526444 B2

Please respond to this request for a certificate of correction within 7 days.

FOR IFW FILES:

Please review the requested changes/corrections as shown in the **COCIN** document(s) in the IFW application image. No new matter should be introduced, nor should the scope or meaning of the claims be changed.

Please complete the response (see below) and forward the completed response to scanning using document code **COCX**.

FOR PAPER FILES:

Please review the requested changes/corrections as shown in the attached certificate of correction. Please complete this form (see below) and forward it with the file to:

Certificates of Correction Branch (CofC)
South Tower - 9A22
Palm Location 7580
You can fax the Directors/SPE response to 571-270-9990

LAMONTE

NEWSOME

Certificates of

Correction Branch

703-756-1574

Thank You For Your Assistance

The request for issuing the above-identified correction(s) is hereby:
Note your decision on the appropriate box.

- ❑ **Approved** — **All** changes apply.
- ❑ **Approved in Part** — Specify below which changes **do not** apply.
- ❑ **Denied** — State the reasons for denial below.

Comments:

_____

_____

_____

_____

_____

_____

SPE
Art Unit

Paper No.: _____

DATE : 5/13/09

TO SPE OF : ART UNIT 3692

SUBJECT : Request for Certificate of Correction for Appl. No.: 11143710 Patent No.: 7526444 B2

Please respond to this request for a certificate of correction within 7 days.

FOR IFW FILES:

Please review the requested changes/corrections as shown in the **COCIN** document(s) in the IFW application image. No new matter should be introduced, nor should the scope or meaning of the claims be changed.

Please complete the response (see below) and forward the completed response to scanning using document code **COCX**.

FOR PAPER FILES:

Please review the requested changes/corrections as shown in the attached certificate of correction. Please complete this form (see below) and forward it with the file to:

Certificates of Correction Branch (CofC)
South Tower - 9A22
Palm Location 7580
You can fax the Directors/SPE response to 571-270-9990

LAMONTE NEWSOME
Certificates of Correction

Branch

703-756-1574

Thank You For Your Assistance

The request for issuing the above-identified correction(s) is hereby:
Note your decision on the appropriate box.

- ☑ **Approved** — All changes apply.
- ☐ **Approved in Part** — Specify below which changes **do not** apply.
- ☐ **Denied** — State the reasons for denial below.

Comments: please make the correction

SPE

3692
Art Unit

UNITED STATES PATENT AND TRADEMARK OFFICE

UNITED STATES DEPARTMENT OF COMMERCE
United States Patent and Trademark Office
Address: COMMISSIONER FOR PATENTS
P.O. Box 1450
Alexandria, Virginia 22313-1450
www.uspto.gov

BANNER & WITCOFF, LTD.
ATTORNEYS FOR CLIENT NO. 016689
1100 13th STREET, N.W.
SUITE 1200
WASHINGTON, DC 20005-4051

Mail Date: 04/21/2010

Applicant	: Takahiro Ikeno	: DECISION ON REQUEST FOR
Patent Number	: 7580168	: RECALCULATION of PATENT
Issue Date	: 08/25/2009	: TERM ADJUSTMENT IN VIEW
Appliction No	: 11/143,733	: OF WYETH AND NOTICE OF INTENT TO
Filed	: 06/03/2005	: ISSUE CERTIFICATE OF CORRECTION
		:

The Request for Recalculation is **GRANTED** to the extent indicated.

The patent term adjustment has been determined to be **1094** days. The USPTO will *sua sponte* issue a certificate of correction reflecting the amount of PTA days determined by the recalculation.

Prior to the issuance of the certificate of correction, the USPTO will afford patentee an opportunity to be heard and request reconsideration. Accordingly, patentee has **one month or thirty (30) days**, whichever is longer, to file a request for reconsideration of this patent term adjustment calculation. See 35 U.S.C. 154(b)(3)(B)(ii) and 37 CFR 1.322(a)(4). No extensions of time will be granted under 37 CFR 1.136.

Patentee should use document code PET.OP if electronically filing a request for reconsideration of this patent term adjustment calculation. The patentee must also include the information required by 37 CFR 1.705(b)(2) and the fee required by 37 CFR 1.18(e). If patentee does not file a timely request for reconsideration of this patent term adjustment calculation including the information required by 37 CFR 1.705(b)(2) and the fee required by 37 CFR 1.18(e), the USPTO will issue a certificate of correction reflecting the PTA determination noted above.

Patentee should be aware that in order to preserve the right to review in the United States District Court for the District of Columbia of the USPTO patent term adjustment determination, patentee must ensure that he or she also take the steps required under 35 U.S.C. 154(b)(4)(A) in a timely manner. Nothing in the request for recalculation should be construed as providing an alternative time frame for commencing a civil action under 35 U.S.C. 154(b)(4)(A).

Any questions concerning this decision should be directed to the Office of Patent Legal Administration at 571-272-7702.

SPE: D. Gray

SPE RESPONSE FOR CERTIFICATE OF CORRECTION

Paper No.: _____

DATE : 6/25/07

TO SPE OF : ART UNIT 2852

SUBJECT : Request for Certificate of Correction for Appl. No.: 11/143,736 Patent No.: 7039339

Please respond to this request for a certificate of correction within 7 days.

Please review the requested changes/corrections as shown in the **COCIN** document(s) in the IFW application image. No new matter should be introduced, nor should the scope or meaning of the claims be changed.

Please complete the response (see below) and forward the completed response to scanning using document code **COCX**.

Lamonte M. Newsome
Certificates of Correction Branch
703-308-9390 ext. 112

Thank You For Your Assistance

The request for issuing the above-identified correction(s) is hereby:
Note your decision on the appropriate box.

- ■ **Approved** — All changes apply.
- ☐ **Approved in Part** — Specify below which changes **do not** apply.
- ☐ **Denied** — State the reasons for denial below.

Comments: _____

DAVID M. GRAY
SUPERVISORY PATENT EXAMINER

SPE — 2852 **Art Unit**

UNITED STATES PATENT AND TRADEMARK OFFICE

Commissioner for Patents
United States Patent and Trademark Office
P.O. Box 1450
Alexandria, VA 22313-1450
www.uspto.gov

MILES & STOCKBRIDGE PC
1751 PINNACLE DRIVE
SUITE 500
MCLEAN VA 22102-3833

COPY MAILED

MAY 1 9 2008

OFFICE OF PETITIONS

In re Application of	:	
Pun et al.	:	
Application No. 11/143,739	:	DECISION ON PETITION
Filed: June 3, 2005	:	
Attorney Docket No. T3716-9904US01	:	

This is a decision on the petition under the unintentional provisions of 37 CFR 1.137(b), filed April 24, 2008, to revive the above-identified application.

The petition is **GRANTED**.

The petition satisfies the requirements of 37 CFR 1.137(b) in that petitioner has supplied (1) the reply in the form of an Amendment, (2) the petition fee, and (3) a proper statement of unintentional delay.

An extension of time under 37 CFR 1.136 must be filed prior to the expiration of the maximum extendable period for reply. See In re Application of S., 8 USPQ2d 1630, 1631 (Comm'r Pats. 1988). Accordingly, since the $525.00 extension of time fee submitted with the petition on April 24,2 008 was subsequent to the maximum extendable period for reply, this fee is unnecessary and will be refunded to petitioner's credit card.

The file does not indicate a change of address has been submitted, although the address given on the petition differs from the address of record. If appropriate, a request to change the address of record should be filed. A courtesy copy of this decision is being mailed to the address given on the petition; however, the Office will mail all future correspondence solely to the address of record.

Telephone inquiries concerning this decision should be directed to the undersigned at (571) 272-3206.

This matter is being referred to Technology Center 2891 for further examination on the merits.

Liana Walsh
Petitions Examiner
Office of Petitions

cc:

DENNIS CLARKE & ASSOCIATES
7422 OLD MAPLE SQUARE
MCLEAN, VA 22102

UNITED STATES PATENT AND TRADEMARK OFFICE

Commissioner for Patents
United States Patent and Trademark Office
P.O. Box 1450
Alexandria, VA 22313-1450
www.uspto.gov

COPY MAILED

SEP 30 2009

OFFICE OF PETITIONS

MILES & STOCKBRIDGE PC
1751 Pinnacle Drive
Suite 500
Mclean, VA 22102-3833

In re Application of	:	
Arthur F. Pun, et al.	:	
Application No. 11/143,739	:	DECISION ON PETITION
Filed: June 3, 2005	:	TO WITHDRAW
Attorney Docket No. T3716-9904US01	:	FROM RECORD
	:	

This is a decision on the Request to Withdraw as attorney or agent of record under 37 C.F.R. § 1.36(b), filed August 31, 2009.

The request is **APPROVED**.

A grantable request to withdraw as attorney/agent of record must be signed by every attorney/agent seeking to withdraw or contain a clear indication that one attorney is signing on behalf of another/others. A request to withdraw will not be approved unless at least 30 (thirty) days would remain between the date of approval and the later of the expiration date of a time to file a response or the expiration date of the maximum time period which can be extended under 37 C.F.R. § 1.136(a).

The request was signed by Gianne J. Arnold on behalf of all attorneys of record. All attorneys/agents have been withdrawn. Applicant is reminded that there is no attorney of record at this time.

All future correspondence will be directed to the first named inventor Arthur F. Pun at the address indicated below.

Telephone inquiries concerning this decision should be directed to Terri Johnson at 571-272-2991.

Terri Johnson
Petitions Examiner
Office of Petitions

cc: **Arthur F. Pun**
3300 Dartmouth Drive
Tallahassee, FL 32317

UNITED STATES PATENT AND TRADEMARK OFFICE

UNITED STATES DEPARTMENT OF COMMERCE
United States Patent and Trademark Office
Address: COMMISSIONER FOR PATENTS
P.O. Box 1450
Alexandria, Virginia 22313-1450
www.uspto.gov

APPLICATION NUMBER	FILING OR 371(C) DATE	FIRST NAMED APPLICANT	ATTY. DOCKET NO./TITLE
11/143,739	06/03/2005	Arthur F. Pun	T3716-9904US01

CONFIRMATION NO. 8104

POWER OF ATTORNEY NOTICE

181
MILES & STOCKBRIDGE PC
1751 PINNACLE DRIVE
SUITE 500
MCLEAN, VA 22102-3833

OC000000038041696

Date Mailed: 09/29/2009

NOTICE REGARDING CHANGE OF POWER OF ATTORNEY

This is in response to the Power of Attorney filed 08/31/2009.

- The withdrawal as attorney in this application has been accepted. Future correspondence will be mailed to the new address of record. 37 CFR 1.33.

/tsjohnson/

Office of Data Management, Application Assistance Unit (571) 272-4000, or (571) 272-4200, or 1-888-786-0101

UNITED STATES PATENT AND TRADEMARK OFFICE

UNITED STATES DEPARTMENT OF COMMERCE
United States Patent and Trademark Office
Address: COMMISSIONER FOR PATENTS
P.O. Box 1450
Alexandria, Virginia 22313-1450
www.uspto.gov

BANNER & WITCOFF, LTD.
ATTORNEYS FOR CLIENT NO. 016689
1100 13th STREET, N.W.
SUITE 1200
WASHINGTON, DC 20005-4051

Mail Date: 04/21/2010

Applicant	: Hiroto Sugahara	: DECISION ON REQUEST FOR
Patent Number	: 7591542	: RECALCULATION of PATENT
Issue Date	: 09/22/2009	: TERM ADJUSTMENT IN VIEW
Appliction No	: 11/143,753	: OF WYETH AND NOTICE OF INTENT TO
Filed	: 06/03/2005	: ISSUE CERTIFICATE OF CORRECTION
		:

The Request for Recalculation is **GRANTED** to the extent indicated.

The patent term adjustment has been determined to be **657** days. The USPTO will *sua sponte* issue a certificate of correction reflecting the amount of PTA days determined by the recalculation.

Prior to the issuance of the certificate of correction, the USPTO will afford patentee an opportunity to be heard and request reconsideration. Accordingly, patentee has **one month or thirty (30) days**, whichever is longer, to file a request for reconsideration of this patent term adjustment calculation. See 35 U.S.C. 154(b)(3)(B)(ii) and 37 CFR 1.322(a)(4). No extensions of time will be granted under 37 CFR 1.136.

Patentee should use document code PET.OP if electronically filing a request for reconsideration of this patent term adjustment calculation. The patentee must also include the information required by 37 CFR 1.705(b)(2) and the fee required by 37 CFR 1.18(e). If patentee does not file a timely request for reconsideration of this patent term adjustment calculation including the information required by 37 CFR 1.705(b)(2) and the fee required by 37 CFR 1.18(e), the USPTO will issue a certificate of correction reflecting the PTA determination noted above.

Patentee should be aware that in order to preserve the right to review in the United States District Court for the District of Columbia of the USPTO patent term adjustment determination, patentee must ensure that he or she also take the steps required under 35 U.S.C. 154(b)(4)(A) in a timely manner. Nothing in the request for recalculation should be construed as providing an alternative time frame for commencing a civil action under 35 U.S.C. 154(b)(4)(A).

Any questions concerning this decision should be directed to the Office of Patent Legal Administration at 571-272-7702.

UNITED STATES PATENT AND TRADEMARK OFFICE

UNITED STATES DEPARTMENT OF COMMERCE
United States Patent and Trademark Office
Address: COMMISSIONER FOR PATENTS
P.O. Box 1450
Alexandria, Virginia 22313-1450
www.uspto.gov

BANNER & WITCOFF, LTD.
ATTORNEYS FOR CLIENT NO. 016689
1100 13th STREET, N.W.
SUITE 1200
WASHINGTON, DC 20005-4051

Mail Date: 05/18/2010

Applicant : Hiroto Sugahara
Patent Number : 7591542
Issue Date : 09/22/2009
Application No : 11/143,753
Filed : 06/03/2005

: NOTICE CONCERNING IMPROPER
: CALCULATION OF PATENT TERM
: ADJUSTMENT BASED UPON USPTO
: IMPROPERLY MEASURING REDUCTION
: PERIOD UNDER 37 CFR 1.704(c)(10).

The United States Patent and Trademark Office (USPTO) discovered that in processing the recent recalculation decisions mailed in response to patentee's filed Request for Recalculation of Patent Term Adjustment in view of Wyeth, the USPTO improperly measured the reduction period for reductions under 37 CFR 1.704(c)(10). Pursuant to 37 CFR 1.704(c)(10), patentee's reduction begins on the date of filing the amendment under 37 CFR 1.312 ("1.312 amendment") or other related paper and ends on the date that the Office mails a response to the filing of the 1.312 amendment or other paper. It has been discovered that during the recalculation, the calculation failed to the limit the reduction to the mail date of the response to the 1.312 amendment or other paper. Accordingly, patentee's reductions were greater than warranted.

This notice **VACATES** the previous GRANTED request for recalculation and provides patentee with a revised GRANTED recalculation.

The patent term adjustment has been determined to be **689** days. The USPTO will *sua sponte* issue a certificate of correction reflecting the amount of patent term adjustment (PTA) days determined by the recalculation.

Prior to the issuance of the certificate of correction, the USPTO will afford patentee an opportunity to be heard and request reconsideration. Accordingly, patentee has **one month or thirty (30) days** from the mail date of this notice, whichever is longer, to file a request for reconsideration of this PTA calculation. See 35 U.S.C. § 154(b)(3)(B)(ii) and 37 CFR 1.322(a)(4).

Patentee should use document code PET.OP if electronically filing a request for reconsideration of this PTA calculation. The patentee must also include the information required by 37 CFR 1.705(b)(2), and the fee required by 37 CFR 1.18(e). If patentee does not file a timely request for reconsideration of this PTA calculation, including the information required by 37 CFR 1.705(b)(2) and the fee required by 37 CFR 1.18(e), the USPTO will issue a certificate of correction reflecting the PTA determination noted above.

Patentee should be aware that in order to preserve the right of review of the USPTO's PTA determination in the United States District Court for the District of Columbia, patentee must ensure that the steps required under 35 U.S.C. § 154 (b)(4) are taken in a timely manner. Nothing in the request for recalculation should be construed as providing an alternative time frame for commencing a civil action under 35 U.S.C. § 154(b)(4).

UNITED STATES PATENT AND TRADEMARK OFFICE

Commissioner for Patents
United States Patent and Trademark Office
P.O. Box 1450
Alexandria, VA 22313-1450
www.uspto.gov

CHARLES J. PRESCOTT, P.A.
SUITE 115
2033 WOOD STREET
SARASOTA, FL 34237

COPY MAILED

FEB 24 2006

OFFICE OF PETITIONS

In re Application of	:	
Miles A. Seter	:	DECISION ON PETITION
Application No. 11/143,790	:	TO MAKE SPECIAL UNDER
Filed: June 2, 2005	:	37 CFR 1.102(c)(1)
Attorney Docket No. P-1946	:	

This is a decision on the petition under 37 CFR 1.102(c)(1), filed January 17, 2006, to make the above-identified application special based on applicant's age as set forth in M.P.E.P. § 708.02, Section IV.

The petition is **GRANTED**.

A grantable petition to make an application special under 37 CFR 1.102(c)(1) and MPEP § 708.02, Section IV: Applicant's Age must be accompanied by evidence showing that at least one of the applicants is 65 years of age, or more, such as a birth certificate or a statement by applicant. No fee is required

The petition includes an affidavit by Miles A. Seter attesting that he is over 65 years of age. Accordingly, the above-identified application has been accorded "special" status.

Telephone inquiries concerning this decision should be directed to Wan Laymon at 571-272-3220.

All other inquiries concerning either the examination or status of the application should be directed to the Technology Center.

This matter is being referred to Technology Center AU 3617 for action on the merits commensurate with this decision.

Wan Laymon

Wan Laymon
Petitions Examiner
Office of Petitions

UNITED STATES PATENT AND TRADEMARK OFFICE

Commissioner for Patents
United States Patent and Trademark Office
P.O. Box 1450
Alexandria, VA 22313-1450
www.uspto.gov

SONNENSCHEIN NATH & ROSENTHAL LLP
P.O. BOX 061080
WACKER DRIVE STATION, SEARS TOWER
CHICAGO IL 60606-1080

COPY MAILED
DEC 12 2008

In re Application of	:	
Yoshiaki Watanabe, et al.	:	
Application No. 11/143,806	:	DECISION GRANTING PETITION
Filed: June 2, 2005	:	UNDER 37 CFR 1.313(c)(2)
Attorney Docket No. 09792909-6220	:	

This is a decision on the petition under 37 CFR 1.313(c)(2), filed December 11, 2008, to withdraw the above-identified application from issue after payment of the issue fee.

The petition is **GRANTED**.

The above-identified application is withdrawn from issue for consideration of a submission under 37 CFR 1.114 (request for continued examination). *See* 37 CFR 1.313(c)(2).

Petitioner is advised that the issue fee paid on November 25, 2008 cannot be refunded. If, however, this application is again allowed, petitioner may request that it be applied towards the issue fee required by the new Notice of Allowance.[1]

Telephone inquiries regarding this decision should be directed to undersigned at (571) 272-1642.

This application is being referred to Technology Center AU 2828 for processing of the request for continued examination under 37 CFR 1.114 and for consideration of the concurrently filed information disclosure statement.

/AMW/
April M. Wise
Petitions Examiner
Office of Petitions

---

[1] *The request to apply the issue fee to the new Notice may be satisfied by completing and returning the new Part B – Fee(s) Transmittal Form (along with any balance due at the time of submission). Petitioner is advised that the Issue Fee Transmittal Form* ***must*** *be completed and timely submitted to avoid abandonment of the application.*

OIPE IAP85
OCT 2 1 2005
PATENT & TRADEMARK OFFICE

IN THE UNITED STATES PATENT AND TRADEMARK OFFICE

Applicant:	Edward J. McCrink	Art Unit: 1725
Application No:	11/143,848	Confirmation No. 9082
Filed:	June 1, 2005	
Title:	SEAM-WELDED AIR HARDENABLE STEEL CONSTRUCTIONS	

PETITION TO MAKE SPECIAL PURSUANT TO 37 C.F.R. § 1.102(c)

Commissioner for Patents
P.O. Box 1450
Alexandria, VA 22313-1350

Sir:

Applicant respectfully requests that the above-identified Patent Application be made special.

This Petition is made pursuant to 37 C.F.R. § 1.102(c). The inventor of the present invention, Edward McCrink, is 84 years old. Pursuant to M.P.E.P. § 708.02, a true a correct copy of Edward McCrink's drivers license is submitted herewith as proof that he is over 65 years old.

PETITION GRANTED

William Krynski
Quality Assurance Specialist
Technology Center 1700
JUN - 7 2007

UNITED STATES PATENT AND TRADEMARK OFFICE

Commissioner for Patents
United States Patent and Trademark Office
P.O. Box 1450
Alexandria, VA 22313-1450
www.uspto.gov

Brinks Hofer Gilson & Lione
NBC Tower-Suite 3600
455 N. Cityfront Plaza Drive
Chicago, IL 60611-5599

COPY MAILED

DEC 27 2007

OFFICE OF PETITIONS

In re Application of
Nelson et al
Application No. 11/143,888
Filed: June 1, 2005
Attorney Docket No. 11867-38

: DECISION GRANTING LETTER

This decision is in response to Patentees's REQUEST FOR REVIEW OF PATENT TERM ADJUSTMENT" filed on November 8, 2007 requesting that the USPTO review the PTA determination at the time of the mailing of the notice of allowance. The applicants believe that they may have been granted too much time in the determination accompanying the notice of allowance.. The Office thanks patentees for the good faith and candor in bringing this matter to the attention of the Office

Patentee's letter concerning PTA is **GRANTED.** The Office will adjust the PTA calculation at the time of the mailing of the notice of allowance to reflect a determination of **412 days** of PTA. A copy of the adjusted PTA calculation is provided with this determination
Patentees are given THIRTY days to reply if applicants disagree with this decision. No extensions of time are available under 37 CFR 1.136.

Applicant asserts that the USPTO may have granted too much PTA at the time of the notice of allowance. Applicant requests review of the PTA determination. Applicants do not provide any specific reason as to why the PTA may have been longer than entitled.

A review of the record reflects that applicant is correct. The Office failed to reduce the PTA for the preliminary paper filed on September 24, 2007. The specific submission was an IDS submission. On September 27, 2007, the Office issued a notice of allowance and in response to the submission of the IDS on October 15, 2007, the Office mailed a supplemental notice of allowability acknowledging the IDS submitted on September 24, 2007.

According to 37 CFR 1.704(c)(6), the Office fails to engage in reasonable efforts to conclude prosecution of the application if the applicants submit a preliminary paper less that one month before the mailing of an Office action under 35 U.S.C. 132 or the mailing of a notice of allowance under 35 U.S.C. 151 that requires the Office to mail a supplemental Office action or notice of allowance.[1] The reduction period begins on the day after the mailing date of the

[1]The Office does not see any statement that would meet the requirements of 37 CFR 1.704(d). Therefore there is no waiver of the reduction for the preliminary submission under 37 CFR 1.702(c)(6).

original office action and ends on the date of the supplemental Office action.[2] Accordingly, the Office failed to take into consideration the 18 day reduction under 37 CFR 1.704(c)(6).

After the mailing of this decision, the Office will forward this application to the publication branch for a prompt issuance of the application.

Because applicants were providing good faith and candor notice as to the amount of PTA, no fee is being assessed.

Any questions concerning this decision should be directed to Kery Fries, Office of Patent Legal Administration, Office of Deputy Commissioner for Patent Examination Policy, at 571-272-7757.

Kery A Fries

Kery A. Fries
Senior Legal Advisor,
Office of Patent Legal Administration
Office of Deputy Commissioner
For Patent Examination Policy

cc: Adjusted PAIR calculation

[2]The reduction began on September 28, 2007 and ended on October 15, 2007, inclusive of both days.

Day : Tuesday
Date: 12/11/2007

PALM INTRANET

Time: 18:10:24

PTA Calculations for Application: 11/143888			
Application Filing Date:	06/01/2005	PTO Delay (PTO):	430
Issue Date of Patent:		Three Years:	0
Pre-Issue Petitions:	0	Applicant Delay (APPL):	0
Post-Issue Petitions:	0	Total PTA (days):	412
PTO Delay Adjustment:	-18		

File Contents History

Number	Date	Contents Description	PTO	APPL	START
55	12/11/2007	ADJUSTMENT OF PTA CALCULATION BY PTO		18	
39	10/05/2007	MAIL NOTICE OF ALLOWANCE	430		-1
38	10/05/2007	MAIL EXAMINER'S AMENDMENT			
31	09/17/2007	ISSUE REVISION COMPLETED			
30	09/17/2007	DOCUMENT VERIFICATION			
29	09/17/2007	NOTICE OF ALLOWANCE DATA VERIFICATION COMPLETED			
28	09/17/2007	CASE DOCKETED TO EXAMINER IN GAU			
27	09/17/2007	EXAMINER'S AMENDMENT COMMUNICATION			
26	09/17/2007	NOTICE OF ALLOWABILITY			
23	08/26/2005	INFORMATION DISCLOSURE STATEMENT CONSIDERED			
22	09/02/2005	INFORMATION DISCLOSURE STATEMENT CONSIDERED			
21	04/28/2006	INFORMATION DISCLOSURE STATEMENT CONSIDERED			
20	12/01/2006	INFORMATION DISCLOSURE STATEMENT CONSIDERED			
19	08/21/2007	INFORMATION DISCLOSURE STATEMENT CONSIDERED			
18	08/21/2007	INFORMATION DISCLOSURE STATEMENT (IDS) FILED			
17	08/29/2007	CASE DOCKETED TO EXAMINER IN GAU			
16	08/13/2007	TRANSFER INQUIRY TO GAU			
15	08/26/2005	INFORMATION DISCLOSURE STATEMENT (IDS) FILED			
14	12/01/2006	REFERENCE CAPTURE ON IDS			
13.7	12/01/2006	INFORMATION DISCLOSURE STATEMENT (IDS)			

		FILED			
13	12/01/2006	INFORMATION DISCLOSURE STATEMENT (IDS) FILED			
12	11/09/2006	IFW TSS PROCESSING BY TECH CENTER COMPLETE			
11.7	04/28/2006	INFORMATION DISCLOSURE STATEMENT (IDS) FILED			
11	04/28/2006	INFORMATION DISCLOSURE STATEMENT (IDS) FILED			
10.7	09/02/2005	INFORMATION DISCLOSURE STATEMENT (IDS) FILED			
10	09/02/2005	INFORMATION DISCLOSURE STATEMENT (IDS) FILED			
9	09/01/2005	APPLICATION DISPATCHED FROM OIPE			
8	09/01/2005	APPLICATION IS NOW COMPLETE			
7	08/22/2005	PAYMENT OF ADDITIONAL FILING FEE/PREEXAM			
6	08/22/2005	A STATEMENT BY ONE OR MORE INVENTORS SATISFYING THE REQUIREMENT UNDER 35 USC 115, OATH OF THE APPLIC			
5	06/20/2005	NOTICE MAILED--APPLICATION INCOMPLETE--FILING DATE ASSIGNED			
3	06/14/2005	CLEARED BY OIPE CSR			
2	06/09/2005	IFW SCAN & PACR AUTO SECURITY REVIEW			
1	06/01/2005	INITIAL EXAM TEAM NN			

Search Another: Application# [ ] Search

EXPLANATION OF PTA CALCULATION

EXPLANATION OF PTE CALCULATION

To go back use Back button on your browser toolbar.

Back to PALM | ASSIGNMENT | OASIS | Home page

UNITED STATES PATENT AND TRADEMARK OFFICE

UNITED STATES DEPARTMENT OF COMMERCE
United States Patent and Trademark Office
Address: COMMISSIONER FOR PATENTS
P.O. Box 1450
Alexandria, Virginia 22313-1450
www.uspto.gov

BRINKS HOFER GILSON & LIONE
P.O. BOX 10395
CHICAGO, IL 60610

Mail Date: 04/21/2010

Applicant	: Vernon Brent Barnes	: DECISION ON REQUEST FOR
Patent Number	: 7597105	: RECALCULATION of PATENT
Issue Date	: 10/06/2009	: TERM ADJUSTMENT IN VIEW
Appliction No	: 11/143,889	: OF WYETH AND NOTICE OF INTENT TO
Filed	: 06/01/2005	: ISSUE CERTIFICATE OF CORRECTION
		:

The Request for Recalculation is **GRANTED** to the extent indicated.

The patent term adjustment has been determined to be **1048** days. The USPTO will *sua sponte* issue a certificate of correction reflecting the amount of PTA days determined by the recalculation.

Prior to the issuance of the certificate of correction, the USPTO will afford patentee an opportunity to be heard and request reconsideration. Accordingly, patentee has **one month or thirty (30) days**, whichever is longer, to file a request for reconsideration of this patent term adjustment calculation. See 35 U.S.C. 154(b)(3)(B)(ii) and 37 CFR 1.322(a)(4). No extensions of time will be granted under 37 CFR 1.136.

Patentee should use document code PET.OP if electronically filing a request for reconsideration of this patent term adjustment calculation. The patentee must also include the information required by 37 CFR 1.705(b)(2) and the fee required by 37 CFR 1.18(e). If patentee does not file a timely request for reconsideration of this patent term adjustment calculation including the information required by 37 CFR 1.705(b)(2) and the fee required by 37 CFR 1.18(e), the USPTO will issue a certificate of correction reflecting the PTA determination noted above.

Patentee should be aware that in order to preserve the right to review in the United States District Court for the District of Columbia of the USPTO patent term adjustment determination, patentee must ensure that he or she also take the steps required under 35 U.S.C. 154(b)(4)(A) in a timely manner. Nothing in the request for recalculation should be construed as providing an alternative time frame for commencing a civil action under 35 U.S.C. 154(b)(4)(A).

Any questions concerning this decision should be directed to the Office of Patent Legal Administration at 571-272-7702.

UNITED STATES PATENT AND TRADEMARK OFFICE

Commissioner for Patents
United States Patent and Trademark Office
P.O. Box 1450
Alexandria, VA 22313-1450
www.uspto.gov

TOLER SCHAFFER, LLP
5000 PLAZA ON THE LAKES
SUITE 265
AUSTIN, TX 78746

COPY MAILED

SEP 1 1 2006

OFFICE OF PETITIONS

In re Application of	:	
Lipscher, et al.	:	
Application No. 11/143,892	:	DECISION ON PETITION
Filed: June 2, 2005	:	TO WITHDRAW
Attorney Docket No. 1039-0170-US	:	FROM RECORD
	:	

This is a decision on the Request to Withdraw as attorney or agent of record under 37 C.F.R. § 1.36(b), filed May 19, 2006.

The request is **NOT APPROVED**.

A grantable request to withdraw as attorney/agent of record must be signed by every attorney/agent seeking to withdraw or contain a clear indication that one attorney is signing on behalf of another/others. A request to withdraw will not be approved unless at least 30 (thirty) days would remain between the date of approval and the later of the expiration date of a time to file a response or the expiration date of the maximum time period which can be extended under 37 C.F.R. § 1.136(a).

The request cannot be approved because no reasons for withdrawal have been provided. The Office cannot, at this time, determine whether practitioner's request is one of the mandatory or permissive reasons enumerated in 37 CFR 10.40. Any subsequent requests must include reasons for withdrawal. Please note that there is a space provided for on PTO/SB/83 (Request to Withdraw as Attorney or Agent) to supply practitioner's reasons.

All future communications from the Office will continue to be directed to the above-listed address until otherwise notified by applicant.

Telephone inquiries concerning this decision should be directed to April Wise at 571-272-1642.

April M. Wise
Petitions Examiner
Office of Petitions

cc: LARSON NEWMAN ABEL
POLANSKY & WHITE, LLP
5914 WEST COURTYARD DRIVE
SUITE 200
AUSTIN, TX 78730

UNITED STATES PATENT AND TRADEMARK OFFICE

UNITED STATES DEPARTMENT OF COMMERCE
United States Patent and Trademark Office
Address: COMMISSIONER FOR PATENTS
P.O. Box 1450
Alexandria, Virginia 22313-1450
www.uspto.gov

DOV ROSENFELD
5507 COLLEGE AVE
SUITE 2
OAKLAND, CA 94618

Mail Date: 04/28/2010

Applicant	: Janet Yu	: DECISION ON REQUEST FOR
Patent Number	: 7610286	: RECALCULATION of PATENT
Issue Date	: 10/27/2009	: TERM ADJUSTMENT IN VIEW
Application No	: 11/143,908	: OF WYETH AND NOTICE OF INTENT TO
Filed	: 06/02/2005	: ISSUE CERTIFICATE OF CORRECTION
		:

The Request for Recalculation is **GRANTED** to the extent indicated.

The patent term adjustment has been determined to be **408** days. The USPTO will *sua sponte* issue a certificate of correction reflecting the amount of PTA days determined by the recalculation.

Prior to the issuance of the certificate of correction, the USPTO will afford patentee an opportunity to be heard and request reconsideration. Accordingly, patentee has **one month or thirty (30) days**, whichever is longer, to file a request for reconsideration of this patent term adjustment calculation. See 35 U.S.C. 154(b)(3)(B)(ii) and 37 CFR 1.322(a)(4). No extensions of time will be granted under 37 CFR 1.136.

Patentee should use document code PET.OP if electronically filing a request for reconsideration of this patent term adjustment calculation. The patentee must also include the information required by 37 CFR 1.705(b)(2) and the fee required by 37 CFR 1.18(e). If patentee does not file a timely request for reconsideration of this patent term adjustment calculation including the information required by 37 CFR 1.705(b)(2) and the fee required by 37 CFR 1.18(e), the USPTO will issue a certificate of correction reflecting the PTA determination noted above.

Patentee should be aware that in order to preserve the right to review in the United States District Court for the District of Columbia of the USPTO patent term adjustment determination, patentee must ensure that he or she also take the steps required under 35 U.S.C. 154(b)(4)(A) in a timely manner. Nothing in the request for recalculation should be construed as providing an alternative time frame for commencing a civil action under 35 U.S.C. 154(b)(4)(A).

Any questions concerning this decision should be directed to the Office of Patent Legal Administration at 571-272-7702.

UNITED STATES PATENT AND TRADEMARK OFFICE

UNITED STATES DEPARTMENT OF COMMERCE
United States Patent and Trademark Office
Address: COMMISSIONER FOR PATENTS
P.O. Box 1450
Alexandria, Virginia 22313-1450
www.uspto.gov

KATTEN MUCHIN ROSENMAN LLP
575 MADISON AVENUE
NEW YORK, NY 10022-2585

Mail Date: 04/21/2010

Applicant	: Tetsuo Tomita	: DECISION ON REQUEST FOR
Patent Number	: 7613149	: RECALCULATION of PATENT
Issue Date	: 11/03/2009	: TERM ADJUSTMENT IN VIEW
Appliction No	: 11/143,924	: OF WYETH AND NOTICE OF INTENT TO
Filed	: 06/02/2005	: ISSUE CERTIFICATE OF CORRECTION
		:

The Request for Recalculation is **GRANTED** to the extent indicated.

The patent term adjustment has been determined to be **997** days. The USPTO will *sua sponte* issue a certificate of correction reflecting the amount of PTA days determined by the recalculation.

Prior to the issuance of the certificate of correction, the USPTO will afford patentee an opportunity to be heard and request reconsideration. Accordingly, patentee has **one month or thirty (30) days**, whichever is longer, to file a request for reconsideration of this patent term adjustment calculation. See 35 U.S.C. 154(b)(3)(B)(ii) and 37 CFR 1.322(a)(4). No extensions of time will be granted under 37 CFR 1.136.

Patentee should use document code PET.OP if electronically filing a request for reconsideration of this patent term adjustment calculation. The patentee must also include the information required by 37 CFR 1.705(b)(2) and the fee required by 37 CFR 1.18(e). If patentee does not file a timely request for reconsideration of this patent term adjustment calculation including the information required by 37 CFR 1.705(b)(2) and the fee required by 37 CFR 1.18(e), the USPTO will issue a certificate of correction reflecting the PTA determination noted above.

Patentee should be aware that in order to preserve the right to review in the United States District Court for the District of Columbia of the USPTO patent term adjustment determination, patentee must ensure that he or she also take the steps required under 35 U.S.C. 154(b)(4)(A) in a timely manner. Nothing in the request for recalculation should be construed as providing an alternative time frame for commencing a civil action under 35 U.S.C. 154(b)(4)(A).

Any questions concerning this decision should be directed to the Office of Patent Legal Administration at 571-272-7702.

UNITED STATES PATENT AND TRADEMARK OFFICE

Commissioner for Patents
United States Patent and Trademark Office
P.O. Box 1450
Alexandria, VA 22313-1450
www.uspto.gov

POSZ LAW GROUP, PLC
12040 SOUTH LAKES DRIVE
SUITE 101
RESTON VA 20191

COPY MAILED

JUL 0 5 2006

OFFICE OF PETITIONS

In re Application of	:	
Gainey et al.	:	
Application No. 11/143,927	:	ON PETITION
Filed: June 3, 2005	:	
Attorney Docket No. 27-014	:	

This is a decision on the petition under 37 CFR 1.102(c)(1), filed May 16, 2006, to make the above-identified application special based on applicant's age as set forth in M.P.E.P. § 708.02, Section IV.

The petition is **GRANTED**.

A grantable petition to make an application special under 37 CFR 1.102(c)(1) and MPEP § 708.02, Section IV: Applicant's Age must be accompanied by evidence showing that at least one of the applicants is 65 years of age, or more, such as a birth certificate or a statement by applicant. No fee is required.

The instant petition includes a statement from the applicant, James C. Otto. Accordingly, the above-identified application has been accorded "special" status.

Telephone inquiries concerning this decision should be directed to the undersigned at 571-272-3206. All other inquiries concerning either the examination or status of the application should be directed to the Technology Center.

This matter is being referred to the Technology Center Art Unit 2618 for action on the merits commensurate with this decision.

Liana Chase
Petitions Examiner
Office of Petitions

UNITED STATES PATENT AND TRADEMARK OFFICE

COMMISSIONER FOR PATENTS
UNITED STATES PATENT AND TRADEMARK OFFICE
P.O. BOX 1450
ALEXANDRIA, VA 22313-1450
www.uspto.gov

COPY MAILED

FEB 0 2 2007

OFFICE OF PETITIONS

POSZ LAW GROUP, PLC
12040 SOUTH LAKES DRIVE
SUITE 101
RESTON, VA 20191

In re Application of
Kenneth M. Gainey, et al.
Application No. 11/143,927
Filed: June 3, 2005
Attorney Docket No. 27-014

ON PETITION

This is a decision in response to the petitions filed January 16, 2007 and January 25, 2007 requesting, respectively, that the above-identified application be revived under the provisions of 37 CFR 1.137(b); and that expedited consideration of the instant petition be given under 37 CFR 1.182.

The petition under 37 CFR 1.182 is **GRANTED**. A decision on the petition under 37 CFR 1.137(b) follows.

A review of the record discloses that the above-identified application became abandoned for failure to respond in a timely manner to a Notice of Allowability mailed September 13, 2006. A Notice of Abandonment was mailed on January 9, 2007. In response, on January 16, 2006, the present petition was filed.

The petition satisfies the requirements of 37 CFR 1.137(b) in that petitioner has supplied (1) the reply in the form of corrected drawings; (2) the petition fee of $1,500; and (3) an adequate statement of unintentional delay.

Accordingly, the petition under 37 CFR 1.137(b) is **GRANTED**.

The application is being referred to the Office of Publications to oversee the review of the drawing filed January 16, 2007.

Telephone inquires related to this decision may be directed to the undersigned at (571) 272-3204. Status inquires related to processing at Publishing Division should be directed to (571) 272-4200.

Sherry D. Brinkley
Petitions Examiner
Office of Petitions

UNITED STATES PATENT AND TRADEMARK OFFICE

UNITED STATES DEPARTMENT OF COMMERCE
United States Patent and Trademark Office
Address: COMMISSIONER FOR PATENTS
P.O. Box 1450
Alexandria, Virginia 22313-1450
www.uspto.gov

BROWDY AND NEIMARK, P.L.L.C.
624 NINTH STREET, NW
SUITE 300
WASHINGTON, DC 20001-5303

Mail Date: 04/21/2010

Applicant	: Jan Bergman	: DECISION ON REQUEST FOR
Patent Number	: 7589093	: RECALCULATION of PATENT
Issue Date	: 09/15/2009	: TERM ADJUSTMENT IN VIEW
Appliction No	: 11/143,935	: OF WYETH AND NOTICE OF INTENT TO
Filed	: 06/03/2005	: ISSUE CERTIFICATE OF CORRECTION
		:

The Request for Recalculation is **GRANTED** to the extent indicated.

The patent term adjustment has been determined to be **1068** days. The USPTO will *sua sponte* issue a certificate of correction reflecting the amount of PTA days determined by the recalculation.

Prior to the issuance of the certificate of correction, the USPTO will afford patentee an opportunity to be heard and request reconsideration. Accordingly, patentee has **one month or thirty (30) days**, whichever is longer, to file a request for reconsideration of this patent term adjustment calculation. See 35 U.S.C. 154(b)(3)(B)(ii) and 37 CFR 1.322(a)(4). No extensions of time will be granted under 37 CFR 1.136.

Patentee should use document code PET.OP if electronically filing a request for reconsideration of this patent term adjustment calculation. The patentee must also include the information required by 37 CFR 1.705(b)(2) and the fee required by 37 CFR 1.18(e). If patentee does not file a timely request for reconsideration of this patent term adjustment calculation including the information required by 37 CFR 1.705(b)(2) and the fee required by 37 CFR 1.18(e), the USPTO will issue a certificate of correction reflecting the PTA determination noted above.

Patentee should be aware that in order to preserve the right to review in the United States District Court for the District of Columbia of the USPTO patent term adjustment determination, patentee must ensure that he or she also take the steps required under 35 U.S.C. 154(b)(4)(A) in a timely manner. Nothing in the request for recalculation should be construed as providing an alternative time frame for commencing a civil action under 35 U.S.C. 154(b)(4)(A).

Any questions concerning this decision should be directed to the Office of Patent Legal Administration at 571-272-7702.

UNITED STATES PATENT AND TRADEMARK OFFICE

Commissioner for Patents
United States Patent and Trademark Office
P.O. Box 1450
Alexandria, VA 22313-1450
www.uspto.gov

Paper No.

GREENBERG-TRAURIG
1750 TYSONS BOULEVARD,
12TH FLOOR
MCLEAN, VA 22102

COPY MAILED
JAN 24 2006
OFFICE OF PETITIONS

In re Application of :
Langberg et al. : DECISION ON PETITION
Application No. 11/143,948 :
Filed: June 3, 2005 :
Atty Docket No. 43689.017000 :

This is a decision on the PETITION UNDER 37 C.F.R. ¶ 1.53 filed December 14, 2005, requesting that the above-identified application be accorded a filing date of June 3, 2005.

Application papers in the above-identified application were filed on June 3, 2005. However, on October 12, 2005, the Initial Patent Examination Division (IPED) mailed a "Notice of Incomplete Nonprovisional Application," notifying applicant that the application papers had not been accorded a filing date because the application was deposited without drawings. (In addition, certain filing fees were due).

In reply, applicants timely filed the instant petition. Applicants assert that at the time of filing, a complete application, including specification, claims and drawings were filed. In support thereof, applicants submit a copy of their date-stamped receipt from the Office of Initial Patent Examination (OIPE) and a copy of a page from the attorney's log book. Applicants further state that replacement drawings were filed on November 29, 2005. No copy of the drawings as applicants maintain they were originally filed on June 3, 2005 were enclosed.

A postcard receipt, which itemizes and properly identifies the items, which are being filed, serves as *prima facie* evidence of

receipt in the Office of all items listed thereon on the date stamped thereon by the Office. See MPEP 503. A review of applicants' receipt for delivery by hand shows that 1) it bears an OIPE date-stamp of receipt of June 3, 2005, 2) it identifies "6 Sheets of Drawings (Figures 1-7)" among the items being filed, and 3) it lacks a notation of non-receipt of any item listed. Thus, it is concluded that applicants have shown that the application as filed on June 3, 2005 included 6 Sheets of Drawings, and thus, is entitled to a filing date of June 3, 2005.

However, on petition, petitioner has not supplied a copy of the drawing sheets containing the missing sheets of drawings as applicants maintain they were filed on June 3, 2005. Rather, applicants seek to use later-filed replacement drawings. Receipt of the sheets of drawings referenced on the return receipt is required before the Office can grant the petition, if appropriate, and return the application to the Office of Initial Patent Examination (OIPE) for processing as a nonprovisional application entitled to a filing date.

Accordingly, the petition is **dismissed** without prejudice to reconsideration upon the submission of the "6 Sheets of Drawings" identified on the return receipt.

Applicants are given ONE (1) MONTH from the mailing date of this decision to submit the drawing sheets as applicants maintain it was originally filed. This period is not extendable under 37 CFR 1.136(a).

Further correspondence with respect to this decision should be addressed as follows:

By mail: Mail Stop Petition
Commissioner for Patents
P.O. Box 1450
Alexandria, VA 22313-1450

By hand: Customer Service Window
Randolph Building
401 Dulany Street
Alexandria, VA 22314

As the drawings are to be part of the original application disclosure, the drawings may not be faxed. See § 1.6(d)(3).

Telephone inquiries specific to this matter should be directed to the undersigned at (571) 272-3219.

Nancy Johnson
Senior Petitions Attorney
Office of Petitions

UNITED STATES PATENT AND TRADEMARK OFFICE

Commissioner for Patents
United States Patent and Trademark Office
P.O. Box 1450
Alexandria, VA 22313-1450
www.uspto.gov

Paper No.

GREENBERG-TRAURIG
1750 TYSONS BOULEVARD,
12TH FLOOR
MCLEAN, VA 22102

COPY MAILED
APR 7 2006
OFFICE OF PETITIONS

In re Application of :
Langberg et al. : DECISION ON PETITION
Application No. 11/143,948 :
Filed: June 3, 2005 :
Atty Docket No. 43689.017000 :

This is in response to the RESPONSE TO DECISION ON PETITION filed January 27, 2006, requesting that the above-identified application be accorded a filing date of June 3, 2005.

Application papers in the above-identified application were filed on June 3, 2005. In response to the "Notice of Incomplete Nonprovisional Application" mailed October 12, 2005, notifying applicants that the application papers had not been accorded a filing date because the application was deposited without drawings, on December 14, 2005, applicants filed the initial petition. Applicants asserted that the application as filed was entitled to a filing date of June 3, 2005. In support thereof, applicants submitted a postcard receipt, itemizing the drawings as among the items enclosed. However, by decision mailed January 24, 2006, the petition was dismissed for failure to supply a copy of the "6 sheets of drawings" identified on the return receipt.

On instant request for reconsideration, applicants submitted true and correct copies of the six sheets of drawings (Figures 1-7).

In view thereof, and for the reasons stated on previous decision, the petition is now **GRANTED**.

The Office of Initial Patent Examination (OIPE) has been advised of this decision. The application is thereby forwarded to OIPE for correction of the filing date to June 3, 2005, using the application papers received on that date and the 6 sheets of drawings supplied on renewed petition filed January 27, 2006.

Telephone inquiries specific to this matter should be directed to the undersigned at (571) 272-3219.

Nancy Johnson
Senior Petitions Attorney
Office of Petitions

UNITED STATES PATENT AND TRADEMARK OFFICE

Commissioner for Patents
United States Patent and Trademark Office
P.O. Box 1450
Alexandria, VA 22313-1450
www.uspto.gov

ASHKAN NAJAFI, P.A.
6817 SOUTHPOINT PARKWAY
SUITE 2301
JACKSONVILLE FL 32216

COPY MAILED
AUG 27 2007
OFFICE OF PETITIONS

In re Application of	:	
Benedict Keenan, et al	:	
Application No. 11/143,977	:	ON PETITION
Filed: June 3, 2005	:	
Attorney Docket No. LIN1358	:	

This is a decision on the petition under 37 CFR 1.137(b), filed by facsimile on July 16, 2007, to revive the above-identified application.

The petition is **GRANTED**.

The application became abandoned for failure submit the issue fee and publication fee in a timely manner in reply to the Notice of Allowance and Fee(s) Due, mailed February 16, 2007, which set a statutory period for reply of three (3) months. Accordingly, the application became abandoned at midnight on May 16, 2007.

The petition satisfies the requirements of 37 CFR 1.137(b) in that petitioner has supplied (1) the reply in the form of issue fee and publication fee; (2) the petition fee of $750.00; and (3) an adequate statement of unintentional delay.

The Office acknowledges receipt of the issue fee payment on May 17, 2007.

Telephone inquiries concerning this decision should be directed to the undersigned at (571)272-3213.

The application file is being forwarded to the Publishing Division to be processed into a patent.

Cheryl Gibson Baylor

Cheryl Gibson-Baylor
Petitions Examiner
Office of Petitions

CENTRAL FAX CENTER

JUL 1 6 2007

PTO/SB/64 (04-07)
Approved for use through 09/30/2007. OMB 0651-0031
U.S. Patent and Trademark Office; U.S. DEPARTMENT OF COMMERCE

Under the Paperwork Reduction Act of 1995, no persons are required to respond to a collection of information unless it displays a valid OMB control number.

PETITION FOR REVIVAL OF AN APPLICATION FOR PATENT ABANDONED UNINTENTIONALLY UNDER 37 CFR 1.137(b)

Docket Number (Optional) LIN1358

First named inventor: BENEFICT KEENAN

Application No.: 11/143977

Art Unit: 3618

Filed: 6-3-05

Examiner: JOHN DANIEL WALTERS

Title: MOTORCYCLE DOLLY

Attention: Office of Petitions
Mail Stop Petition
Commissioner for Patents
P.O. Box 1450
Alexandria, VA 22313-1450
FAX (571) 273-8300

NOTE: If information or assistance is needed in completing this form, please contact Petitions Information at (571) 272-3282.

The above-identified application became abandoned for failure to file a timely and proper reply to a notice or action by the United States Patent and Trademark Office. The date of abandonment is the day after the expiration date of the period set for reply in the office notice or action plus an extensions of time actually obtained.

APPLICANT HEREBY PETITIONS FOR REVIVAL OF THIS APPLICATION

NOTE: A grantable petition requires the following items:
(1) Petition fee;
(2) Reply and/or issue fee;
(3) Terminal disclaimer with disclaimer fee - required for all utility and plant applications filed before June 8, 1995; and for all design applications; and
(4) Statement that the entire delay was unintentional.

1. Petition fee

☑ Small entity-fee $ 750.00 (37 CFR 1.17(m)). Applicant claims small entity status. See 37 CFR 1.27.

☐ Other than small entity – fee $ _____ (37 CFR 1.17(m))

2. Reply and/or fee

A. The reply and/or fee to the above-noted Office action in the form of ISSUE FEE PAYMENT AND FORMALIZED DRAWINGS (identify type of reply):

☑ has been filed previously on MAY 17, 2007.
☐ is enclosed herewith.

B. The issue fee and publication fee (if applicable) of $ 700.00 07/18/2007 EAREGAY1 00000028 503702 11143977
☑ has been paid previously on MAY 17, 2007 01 FC:2453 750.00 DA
☐ is enclosed herewith.

This collection of information is required by 37 CFR 1.137(b). The information is required to obtain or retain a benefit by the public which is to file (and by the USPTO to process) an application. Confidentiality is governed by 35 U.S.C. 122 and 37 CFR 1.11 and 1.14. This collection is estimated to take 1.0 hour to complete, including gathering, preparing, and submitting the completed application form to the USPTO. Time will vary depending upon the individual case. Any comments on the amount of time you require to complete this form and/or suggestions for reducing this burden, should be sent to the Chief Information Officer, U.S. Patent and Trademark Office, U.S. Department of Commerce, P.O. Box 1450, Alexandria, VA 22313-1450. DO NOT SEND FEES OR COMPLETED FORMS TO THIS ADDRESS. SEND TO: Mail Stop Petition, Commissioner for Patents, P.O. Box 1450, Alexandria, VA 22313-1450.

If you need assistance in completing the form, call 1-800-PTO-9199 and select option 2.

PTO/SB/64 (04-07)
Approved for use through 09/30/2007 OMB 0651-0031
U.S. Patent and Trademark Office; U.S. DEPARTMENT OF COMMERCE
Under the Paperwork Reduction Act of 1995, no persons are required to respond to a collection of information unless it displays a valid OMB control number.

3. Terminal disclaimer with disclaimer fee

☑ Since this utility/plant application was filed on or after June 8, 1995, no terminal disclaimer is required.

☐ A terminal disclaimer (and disclaimer fee (37 CFR 1.20(d)) of $ ___ for a small entity or $ _____ for other than a small entity) disclaiming the required period of time is enclosed herewith (see PTO/SB/63).

4. STATEMENT: The entire delay in filing the required reply from the due date for the required reply until the filing of a grantable petition under 37 CFR 1.137(b) was unintentional. [NOTE: The United States Patent and Trademark Office may require additional information if there is a question as to whether either the abandonment or the delay in filing a petition under 37 CFR 1.137(b) was unintentional (MPEP 711.03(c), subsections (III)(C) and (D)).]

WARNING:

Petitioner/applicant is cautioned to avoid submitting personal information in documents filed in a patent application that may contribute to identity theft. Personal information such as social security numbers, bank account numbers, or credit card numbers (other than a check or credit card authorization form PTO-2038 submitted for payment purposes) is never required by the USPTO to support a petition or an application. If this type of personal information is included in documents submitted to the USPTO, petitioners/applicants should consider redacting such personal information from the documents before submitting them to the USPTO. Petitioner/applicant is advised that the record of a patent application is available to the public after publication of the application (unless a non-publication request in compliance with 37 CFR 1.213(a) is made in the application) or issuance of a patent. Furthermore, the record from an abandoned application may also be available to the public if the application is referenced in a published application or an issued patent (see 37 CFR 1.14). Checks and credit card authorization forms PTO-2038 submitted for payment purposes are not retained in the application file and therefore are not publicly available.

Signature	7.16.07 Date
ASHKAN NAJAFI Typed or printed name	49078 Registration Number, if applicable
6817 SOUTHPOINT PARKWAY, SUITE 2301 Address	904-296-0055 Telephone Number
JACKSONVILLE, FL 32216 Address	

Enclosures: ☑ Fee Payment

☑ Reply

☐ Terminal Disclaimer Form

☐ Additional sheets containing statements establishing unintentional delay

☒ Other: copy of front/back of Applicant's check

CERTIFICATE OF MAILING OR TRANSMISSION [37 CFR 1.8(a)]

I hereby certify that this correspondence is being:

☐ Deposited with the United States Postal Service on the date shown below with sufficient postage as first class mail in an envelope addressed to: Mail Stop Petition, Commissioner for Patents, P. O. Box 1450, Alexandria, VA 22313-1450.

☑ Transmitted by facsimile on the date shown below to the United States Patent and Trademark Office at (571) 273-8300.

7.16.07 Date	Signature
	ASHKAN NAJAFI Typed or printed name of person signing certificate

PAGE 5/11 * RCVD AT 7/16/2007 11:31:40 AM [Eastern Daylight Time] * SVR:USPTO-EFXRF-3/13 * DNIS:2738300 * CSID:9042960056 * DURATION (mm-ss):04-20

PTO/SB/21 (09-06)
Approved for use through 03/31/2007. OMB 0651-0031
U.S. Patent and Trademark Office; U.S. DEPARTMENT OF COMMERCE
Under the Paperwork Reduction Act of 1995, no persons are required to respond to a collection of information unless it displays a valid OMB control number.

TRANSMITTAL FORM

(to be used for all correspondence after initial filing)

Application Number	11/143977
Filing Date	6-3-05
First Named Inventor	BENEDICT KEENAN
Art Unit	3616
Examiner Name	JOHN DANIEL WALTERS
Total Number of Pages in This Submission	11
Attorney Docket Number	LIN1358

RECEIVED
CENTRAL FAX CENTER
JUL 16 2007

ENCLOSURES *(Check all that apply)*

- [x] Fee Transmittal Form
  - [x] Fee Attached
- [x] Amendment/Reply
  - [ ] After Final
  - [ ] Affidavits/declaration(s)
- [ ] Extension of Time Request
- [ ] Express Abandonment Request
- [ ] Information Disclosure Statement
- [ ] Certified Copy of Priority Document(s)
- [ ] Reply to Missing Parts/ Incomplete Application
  - [ ] Reply to Missing Parts under 37 CFR 1.52 or 1.53
- [ ] Drawing(s)
- [ ] Licensing-related Papers
- [x] Petition
- [ ] Petition to Convert to a Provisional Application
- [ ] Power of Attorney, Revocation Change of Correspondence Address
- [ ] Terminal Disclaimer
- [ ] Request for Refund
- [ ] CD, Number of CD(s) _____
  - [ ] Landscape Table on CD
- [ ] After Allowance Communication to TC
- [ ] Appeal Communication to Board of Appeals and Interferences
- [ ] Appeal Communication to TC (Appeal Notice, Brief, Reply Brief)
- [ ] Proprietary Information
- [ ] Status Letter
- [x] Other Enclosure(s) (please identify below):

Remarks

PETITION TO REVIVE UNINTENTIONALLY ABANDONED PATENT APPLICATION
COPY OF CASHED CHECK AND DRAWINGS

SIGNATURE OF APPLICANT, ATTORNEY, OR AGENT

Firm Name	LAW OFFICE OF ASHKAN NAJAFI, PA		
Signature	Ashkan Najafi		
Printed name	ASHKAN NAJAFI		
Date	7.16.07	Reg. No.	49078

CERTIFICATE OF TRANSMISSION/MAILING

I hereby certify that this correspondence is being facsimile transmitted to the USPTO or deposited with the United States Postal Service with sufficient postage as first class mail in an envelope addressed to: Commissioner for Patents, P.O. Box 1450, Alexandria, VA 22313-1450 on the date shown below:

Signature	Ashkan Najafi		
Typed or printed name	Ashkan Najafi	Date	7.16.07

This collection of information is required by 37 CFR 1.5. The information is required to obtain or retain a benefit by the public which is to file (and by the USPTO to process) an application. Confidentiality is governed by 35 U.S.C. 122 and 37 CFR 1.11 and1.14. This collection is estimated to 2 hours to complete, including gathering, preparing, and submitting the completed application form to the USPTO. Time will vary depending upon the individual case. Any comments on the amount of time you require to complete this form and/or suggestions for reducing this burden, should be sent to the Chief Information Officer, U.S. Patent and Trademark Office, U.S. Department of Commerce, P.O. Box 1450, Alexandria, VA 22313-1450. DO NOT SEND FEES OR COMPLETED FORMS TO THIS ADDRESS. SEND TO: Commissioner for Patents, P.O. Box 1450, Alexandria, VA 22313-1450.

If you need assistance in completing the form, call 1-800-PTO-9199 and select option 2.

RECEIVED
CENTRAL FAX CENTER
JUL 1 6 2007

UNITED STATES PATENT AND TRADEMARK OFFICE

Appl. No.	:	11/143977
Applicant	:	Benedict Keenan
Filed	:	6-3-05
TC/AU	:	3618
Docket No.	:	LIN1358
Customer No.	:	34356

Commissioner for Patents
P.O. Box 1450
Alexandria, VA 22313-1450

PETITION TO THE COMMISSIONER UNDER 37 C.F.R. 1.181(a)

Sir:

Applicant respectfully requests the Notice of Abandonment dated 06/11/2007 (included herewith) to be withdrawn because Applicant submitted a complete and timely response to the Notice Of Allowance dated 03/16/2007, of which a complete copy is enclosed. A copy of the front and back of applicant's cashed check is also included herewith and is also enclosed as prima facie evidence of a proper and timely filed response. A petition fee of $750.00 is also enclosed. Applicant respectfully requests that a timely Issue Notification be issued in this case.

Respectfully submitted,
Law Office of Ashkan Najafi, P.A.

By _____
Ashkan Najafi, Esq.
Reg. No. 49,078
Customer No. 34,356

6817 Southpoint Parkway
Suite 2301
Jacksonville, FL 32216
Telephone: 904-296-0055
Facsimile: 904-296-0056
patentattorney@patent-usa.com

PAGE 2/11 * RCVD AT 7/16/2007 11:31:40 AM [Eastern Daylight Time] * SVR:USPTO-EFXRF-3/13 * DNIS:2738300 * CSID:9042960056 * DURATION (mm-ss):04-20

RECEIVED
CENTRAL FAX CENTER
JUL 1 6 2007

PTO/SB/17 (07-07)
Approved for use through 06/30/2010. OMB 0651-0032
U.S. Patent and Trademark Office; U.S. DEPARTMENT OF COMMERCE

Under the Paperwork Reduction Act of 1995, no persons are required to respond to a collection of information unless it displays a valid OMB control number

Effective on 12/08/2004.
Fees pursuant to the Consolidated Appropriations Act, 2005 (H.R. 4818).

FEE TRANSMITTAL
For FY 2007

☑ Applicant claims small entity status. See 37 CFR 1.27

TOTAL AMOUNT OF PAYMENT ($) 750.00

Complete if Known	
Application Number	11/143977
Filing Date	6-3-05
First Named Inventor	BENEDICT KEENAN
Examiner Name	JOHN DANIEL WALTERS
Art Unit	3618
Attorney Docket No.	LIN1358

METHOD OF PAYMENT (check all that apply)

☐ Check ☐ Credit Card ☐ Money Order ☐ None ☐ Other (please identify): _____

☑ Deposit Account Deposit Account Number: 503702 Deposit Account Name: ASHKAN NAJAFI

For the above-identified deposit account, the Director is hereby authorized to: (check all that apply)

☑ Charge fee(s) indicated below ☐ Charge fee(s) indicated below, except for the filing fee

☐ Charge any additional fee(s) or underpayments of fee(s) under 37 CFR 1.16 and 1.17 ☑ Credit any overpayments

WARNING: Information on this form may become public. Credit card information should not be included on this form. Provide credit card information and authorization on PTO-2038.

FEE CALCULATION

1. BASIC FILING, SEARCH, AND EXAMINATION FEES

	FILING FEES		SEARCH FEES		EXAMINATION FEES		
Application Type	Fee ($)	Small Entity Fee ($)	Fee ($)	Small Entity Fee ($)	Fee ($)	Small Entity Fee ($)	Fees Paid ($)
Utility	300	150	500	250	200	100	
Design	200	100	100	50	130	65	
Plant	200	100	300	150	160	80	
Reissue	300	150	500	250	600	300	
Provisional	200	100	0	0	0	0	

2. EXCESS CLAIM FEES

Fee Description	Fee ($)	Small Entity Fee ($)
Each claim over 20 (including Reissues)	50	25
Each independent claim over 3 (including Reissues)	200	100
Multiple dependent claims	360	180

Total Claims _____ - 20 or HP = _____ x _____ = _____ (Extra Claims, Fee ($), Fee Paid ($))

HP = highest number of total claims paid for, if greater than 20.

Indep. Claims _____ - 3 or HP = _____ x _____ = _____ (Extra Claims, Fee ($), Fee Paid ($))

HP = highest number of independent claims paid for, if greater than 3.

Multiple Dependent Claims: Fee ($) _____ Fee Paid ($) _____

3. APPLICATION SIZE FEE

If the specification and drawings exceed 100 sheets of paper (excluding electronically filed sequence or computer listings under 37 CFR 1.52(e)), the application size fee due is $250 ($125 for small entity) for each additional 50 sheets or fraction thereof. See 35 U.S.C. 41(a)(1)(G) and 37 CFR 1.16(s).

Total Sheets _____ - 100 = _____ Extra Sheets / 50 = _____ Number of each additional 50 or fraction thereof (round up to a whole number) x _____ Fee ($) = _____ Fee Paid ($)

4. OTHER FEE(S)

	Fees Paid ($)
Non-English Specification, $130 fee (no small entity discount)	
Other (e.g., late filing surcharge): 37 CFR 1.17(M)	750.00

SUBMITTED BY

Signature	[signature]	Registration No. (Attorney/Agent) 49078	Telephone 904-221-6611
Name (Print/Type)	ASHKAN NAJAFI		Date 7.16.07

This collection of information is required by 37 CFR 1.136. The information is required to obtain or retain a benefit by the public which is to file (and by the USPTO to process) an application. Confidentiality is governed by 35 U.S.C. 122 and 37 CFR 1.14. This collection is estimated to take 30 minutes to complete, including gathering, preparing, and submitting the completed application form to the USPTO. Time will vary depending upon the individual case. Any comments on the amount of time you require to complete this form and/or suggestions for reducing this burden, should be sent to the Chief Information Officer, U.S. Patent and Trademark Office, U.S. Department of Commerce, P.O. Box 1450, Alexandria, VA 22313-1450. DO NOT SEND FEES OR COMPLETED FORMS TO THIS ADDRESS. SEND TO: Commissioner for Patents, P.O. Box 1450, Alexandria, VA 22313-1450.
If you need assistance in completing the form, call 1-800-PTO-9199 and select option 2.

RECEIVED
CENTRAL FAX CENTER
JUL 16 2007

OIPE
MAY 17 2007

PART B - FEE(S) TRANSMITTAL

Complete and send this form, together with applicable fee(s), to: Mail Mail Stop ISSUE FEE
Commissioner for Patents
P.O. Box 1450
Alexandria, Virginia 22313-1450
or Fax (571)-273-2885

INSTRUCTIONS: This form should be used for transmitting the ISSUE FEE and PUBLICATION FEE (if required). Blocks 1 through 5 should be completed where appropriate. All further correspondence including the Patent, advance orders and notification of maintenance fees will be mailed to the current correspondence address as indicated unless corrected below or directed otherwise in Block 1, by (a) specifying a new correspondence address; and/or (b) indicating a separate "FEE ADDRESS" for maintenance fee notifications.

CURRENT CORRESPONDENCE ADDRESS (Note: Use Block 1 for any change of address)

34356 - 7590 02/16/2007

ASHKAN NAJAFI, P.A.
6817 SOUTHPOINT PARKWAY
SUITE 2301
JACKSONVILLE, FL 32216

05/17/2007 FHETEKI2 00000055 11143977

01 FC:2501 700.00 OP

Note: A certificate of mailing can only be used for domestic mailings of the Fee(s) Transmittal. This certificate cannot be used for any other accompanying papers. Each additional paper, such as an assignment or formal drawing, must have its own certificate of mailing or transmission.

Certificate of Mailing or Transmission

I hereby certify that this Fee(s) Transmittal is being deposited with the United States Postal Service with sufficient postage for first class mail in an envelope addressed to the Mail Stop ISSUE FEE address above, or being facsimile transmitted to the USPTO (571) 273-2885, on the date indicated below.

(Depositor's name)
(Signature)
(Date)

APPLICATION NO.	FILING DATE	FIRST NAMED INVENTOR	ATTORNEY DOCKET NO.	CONFIRMATION NO.
11/143,977	06/03/2005	Benedict Keenan	LIN1358	9391

TITLE OF INVENTION: MOTORCYCLE DOLLY

APPLN. TYPE	SMALL ENTITY	ISSUE FEE DUE	PUBLICATION FEE DUE	PREV. PAID ISSUE FEE	TOTAL FEE(S) DUE	DATE DUE
nonprovisional	YES	$700	$0	$0	$700	05/16/2007

EXAMINER	ART UNIT	CLASS-SUBCLASS
WALTERS, JOHN DANIEL	3618	280-079400

1. Change of correspondence address or indication of "Fee Address" (37 CFR 1.363).
   - ☐ Change of correspondence address (or Change of Correspondence Address form PTO/SB/122) attached.
   - ☐ "Fee Address" indication (or "Fee Address" Indication form PTO/SB/47; Rev 03-02 or more recent) attached. Use of a Customer Number is required.

2. For printing on the patent front page, list
   (1) the names of up to 3 registered patent attorneys or agents OR, alternatively,
   (2) the name of a single firm (having as a member a registered attorney or agent) and the names of up to 2 registered patent attorneys or agents. If no name is listed, no name will be printed.
   1 ____
   2 ____
   3 ____

3. ASSIGNEE NAME AND RESIDENCE DATA TO BE PRINTED ON THE PATENT (print or type)

PLEASE NOTE: Unless an assignee is identified below, no assignee data will appear on the patent. If an assignee is identified below, the document has been filed for recordation as set forth in 37 CFR 3.11. Completion of this form is NOT a substitute for filing an assignment.

(A) NAME OF ASSIGNEE (B) RESIDENCE: (CITY and STATE OR COUNTRY)

Please check the appropriate assignee category or categories (will not be printed on the patent): ☐ Individual ☐ Corporation or other private group entity ☐ Government

4a. The following fee(s) are submitted:
- ☐ Issue Fee
- ☐ Publication Fee (No small entity discount permitted)
- ☐ Advance Order - # of Copies ____

4b. Payment of Fee(s): (Please first reapply any previously paid issue fee shown above)
- ☐ A check is enclosed.
- ☐ Payment by credit card. Form PTO-2038 is attached.
- ☐ The Director is hereby authorized to charge the required fee(s), any deficiency, or credit any overpayment, to Deposit Account Number ____ (enclose an extra copy of this form).

5. Change in Entity Status (from status indicated above)
- ☐ a. Applicant claims SMALL ENTITY status. See 37 CFR 1.27.
- ☐ b. Applicant is no longer claiming SMALL ENTITY status. See 37 CFR 1.27(g)(2).

NOTE: The Issue Fee and Publication Fee (if required) will not be accepted from anyone other than the applicant; a registered attorney or agent; or the assignee or other party in interest as shown by the records of the United States Patent and Trademark Office.

Authorized Signature ____ Date 5-14-07

Typed or printed name ASHKAN NAJAFI Registration No. 49078

This collection of information is required by 37 CFR 1.311. The information is required to obtain or retain a benefit by the public which is to file (and by the USPTO to process) an application. Confidentiality is governed by 35 U.S.C. 122 and 37 CFR 1.14. This collection is estimated to take 12 minutes to complete, including gathering, preparing, and submitting the completed application form to the USPTO. Time will vary depending upon the individual case. Any comments on the amount of time you require to complete this form and/or suggestions for reducing this burden, should be sent to the Chief Information Officer, U.S. Patent and Trademark Office, U.S. Department of Commerce, P.O. Box 1450, Alexandria, Virginia 22313-1450. DO NOT SEND FEES OR COMPLETED FORMS TO THIS ADDRESS. SEND TO: Commissioner for Patents, P.O. Box 1450, Alexandria, Virginia 22313-1450.

Under the Paperwork Reduction Act of 1995, no persons are required to respond to a collection of information unless it displays a valid OMB control number.

PAGE 6/11 * RCVD AT 7/16/2007 11:31:40 AM [Eastern Daylight Time] * SVR:USPTO-EFXRF-3/13 * DNIS:2738300 * CSID:9042960056 * DURATION (mm-ss):04-20

Check Detail

Check #: 1034 Date Cleared: 05-23-2007 Amount: $700.00

1:53 PM 6/22/2007

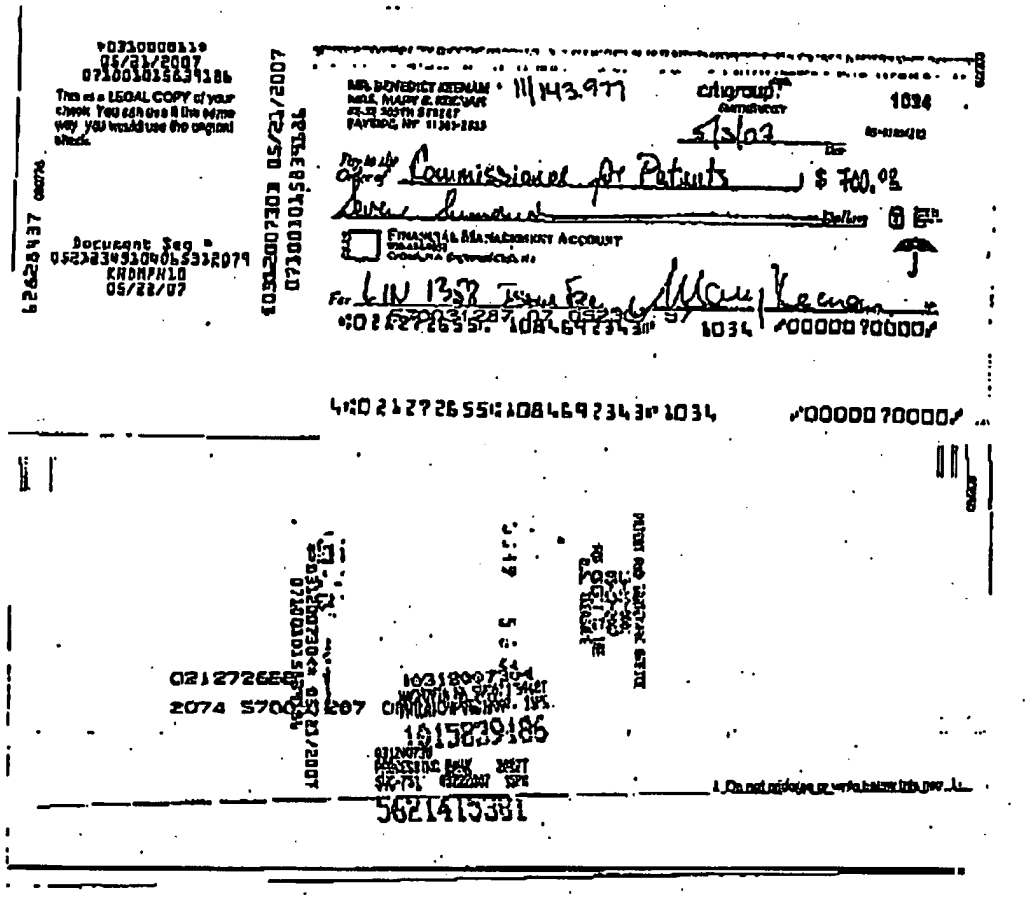

UNITED STATES PATENT AND TRADEMARK OFFICE

UNITED STATES DEPARTMENT OF COMMERCE
United States Patent and Trademark Office
Address: COMMISSIONER FOR PATENTS
P.O. Box 1450
Alexandria, Virginia 22313-1450
www.uspto.gov

APPLICATION NO.	FILING DATE	FIRST NAMED INVENTOR	ATTORNEY DOCKET NO.	CONFIRMATION NO.
11/143,977	06/03/2005	Benedict Keenan	LIN1358	9391

34356 7590 06/11/2007
ASHKAN NAJAFI, P.A.
6817 SOUTHPOINT PARKWAY
SUITE 2301
JACKSONVILLE, FL 32216

EXAMINER
WALTERS, JOHN DANIEL

ART UNIT	PAPER NUMBER
3618	

MAIL DATE	DELIVERY MODE
06/11/2007	PAPER

Please find below and/or attached an Office communication concerning this application or proceeding.

The time period for reply, if any, is set in the attached communication.

Notice of Abandonment	Application No.	Applicant(s)	
	11/143,977	KEENAN	
	Examiner	Art Unit	
	WALTERS	3618	

-- The MAILING DATE of this communication appears on the cover sheet with the correspondence address--

This application is abandoned in view of:

1. ☐ Applicant's failure to timely file a proper reply to the Office letter mailed on _____.
   (a) ☐ A reply was received on _____ (with a Certificate of Mailing or Transmission dated _____), which is after the expiration of the period for reply (including a total extension of time of _____ month(s)) which expired on _____.
   (b) ☐ A proposed reply was received on _____, but it does not constitute a proper reply under 37 CFR 1.113 (a) to the final rejection.
   (A proper reply under 37 CFR 1.113 to a final rejection consists only of: (1) a timely filed amendment which places the application in condition for allowance; (2) a timely filed Notice of Appeal (with appeal fee); or (3) a timely filed Request for Continued Examination (RCE) in compliance with 37 CFR 1.114).
   (c) ☐ A reply was received on _____ but it does not constitute a proper reply, or a bona fide attempt at a proper reply, to the non-final rejection. See 37 CFR 1.85(a) and 1.111. (See explanation in box 7 below).
   (d) ☐ No reply has been received.

2. ☒ Applicant's failure to timely pay the required issue fee and publication fee, if applicable, within the statutory period of three months from the mailing date of the Notice of Allowance (PTOL-85).
   (a) ☒ The issue fee and publication fee, if applicable, was received on 5/17/07 (with a Certificate of Mailing or Transmission dated _____), which is after the expiration of the statutory period for payment of the issue fee (and publication fee) set in the Notice of Allowance (PTOL-85).
   (b) ☐ The submitted fee of $_____ is insufficient. A balance of $_____ is due.
   The issue fee required by 37 CFR 1.18 is $_____. The publication fee, if required by 37 CFR 1.18(d), is $_____.
   (c) ☐ The issue fee and publication fee, if applicable, has not been received.

3. ☐ Applicant's failure to timely file corrected drawings as required by, and within the three-month period set in, the Notice of Allowability (PTO-37).
   (a) ☐ Proposed corrected drawings were received on _____ (with a Certificate of Mailing or Transmission dated _____), which is after the expiration of the period for reply.
   (b) ☐ No corrected drawings have been received.

4. ☐ The letter of express abandonment which is signed by the attorney or agent of record, the assignee of the entire interest, or all of the applicants.

5. ☐ The letter of express abandonment which is signed by an attorney or agent (acting in a representative capacity under 37 CFR 1.34(a)) upon the filing of a continuing application.

6. ☐ The decision by the Board of Patent Appeals and Interference rendered on _____ and because the period for seeking court review of the decision has expired and there are no allowed claims.

7. ☐ The reason(s) below:

lgd

Petitions to revive under 37 CFR 1.137(a) or (b), or requests to withdraw the holding of abandonment under 37 CFR 1.181, should be promptly filed to minimize any negative effects on patent term.

UNITED STATES PATENT AND TRADEMARK OFFICE

COMMISSIONER FOR PATENTS
UNITED STATES PATENT AND TRADEMARK OFFICE
P.O. BOX 1450
ALEXANDRIA, VA 22313-1450
www.uspto.gov

Paper No.

WYETH LLC
PATENT LAW GROUP
5 GIRALDA FARMS
MADISON NJ 07940

MAILED

MAY 26 2010

OFFICE OF PETITIONS

In re Patent No. 7,507,752	:	DECISION ON REQUEST
He et al.	:	FOR
Issue Date: March 24, 2009	:	RECONSIDERATION OF
Application No. 11/143,980	:	PATENT TERM ADJUSTMENT
Filed: June 3, 2005	:	and
Atty Docket No. AM101426	:	NOTICE OF INTENT TO ISSUE
	:	CERTIFICATE OF CORRECTION

This is a decision on the petition filed on February 10, 2009, which is being treated as a petition under 37 CFR 1.705(d) requesting that the patent term adjustment indicated on the above-identified patent be corrected to indicate that the term of the above-identified patent is extended or adjusted by four hundred ninety-seven (497) days.

The petition to correct the patent term adjustment indicated on the above-identified patent is **GRANTED to the extent indicated herein**. The patent term adjustment is corrected to indicate that the term of the above-identified patent is extended or adjusted by **four hundred eighty-four (484)** days.

As the period from the filing date of the request for continued examination (RCE) to the issue date of the patent is not included in the "B" delay period, the over three year period begins on June 4, 2008 and ends on September 22, 2008, the day before the RCE was filed. As such, the over three-year pendency period began on June 4, 2008 and ended on September 22, 2008. See 35 U.S.C. 154(b)(1)(B)(i). Thus, the "B" delay is 110, not 112, days for the period beginning on June 4, 2008 and ending on September 22, 2008.

Moreover, 16 calendar days of the "A" delay beginning on June 8, 2008 and ending on June 23, 2008 occur on calendar days during the over three-year period, June 4, 2008 and ending on September 22, 2008. Thus, 16 days of "A" delay overlap with the "B" delay. As such, the patent term adjustment is increased by 94 (110 - 16) days.

However, a review of the record also reveals entry of a period of reduction of 11 days pursuant to 37 CFR 1.704(C)(10). After the mailing of the notice of allowance on November 10, 2008, patentee filed a request for correction of inventorship on February 10, 2009. The Office took action in response on February 20, 2009. Thus, entry of a period of reduction of 11 days is warranted. Thus, the patent term adjustment is also reduced by 11 days to a revised patent term adjustment of four hundred eighty-four (484) days.

The Office will sua sponte issue a certificate of correction. Pursuant to 37 CFR 1.322, the Office will not issue a certificate of correction without first providing assignee or patentee an opportunity to be heard. Accordingly, patentees are given **one (1) month or thirty (30) days**, whichever is longer, from the mail date of this decision to respond. No extensions of time will be granted under § 1.136.

The Office acknowledges submission of the $200.00 fee set forth in 37 CFR 1.18(e). No additional fees are required.

The application is being forwarded to the Certificates of Branch for issuance of a certificate of correction. The Office will issue a certificate of correction indicating that the term of the above-identified patent is extended or adjusted by **four hundred eighty-four (484)** days.

Telephone inquiries specific to this matter should be directed to the undersigned at (571) 272-3219.

Nancy Johnson
Senior Petitions Attorney
Office of Petitions

Enclosure: Copy of DRAFT Certificate of Correction

UNITED STATES PATENT AND TRADEMARK OFFICE

CERTIFICATE OF CORRECTION

PATENT : 7,507,752 B2

DATED : **March 24, 2009** **DRAFT**

INVENTOR(S) : He et al.

It is certified that error appears in the above-identified patent and that said Letters Patent is hereby corrected as shown below:

On the cover page,

[*] Notice: Subject to any disclaimer, the term of this patent is extended or adjusted under 35 USC 154(b) by 401 days

Delete the phrase "by 401 days" and insert – by 484 days--

UNITED STATES PATENT AND TRADEMARK OFFICE

UNITED STATES DEPARTMENT OF COMMERCE
United States Patent and Trademark Office
Address: COMMISSIONER FOR PATENTS
P.O. Box 1450
Alexandria, Virginia 22313-1450
www.uspto.gov

SIDLEY AUSTIN LLP
717 NORTH HARWOOD
SUITE 3400
DALLAS, TX 75201

Mail Date: 04/20/2010

Applicant	: Koichi Kamon	: DECISION ON REQUEST FOR
Patent Number	: 7667764	: RECALCULATION of PATENT
Issue Date	: 02/23/2010	: TERM ADJUSTMENT IN VIEW
Appliction No	: 11/143,988	: OF WYETH AND NOTICE OF INTENT TO
Filed	: 06/02/2005	: ISSUE CERTIFICATE OF CORRECTION
		:

The Request for Recalculation is **GRANTED** to the extent indicated.

The patent term adjustment has been determined to be **1301** days. The USPTO will *sua sponte* issue a certificate of correction reflecting the amount of PTA days determined by the recalculation.

Prior to the issuance of the certificate of correction, the USPTO will afford patentee an opportunity to be heard and request reconsideration. Accordingly, patentee has **one month or thirty (30) days**, whichever is longer, to file a request for reconsideration of this patent term adjustment calculation. See 35 U.S.C. 154(b)(3)(B)(ii) and 37 CFR 1.322(a)(4). No extensions of time will be granted under 37 CFR 1.136.

Patentee should use document code PET.OP if electronically filing a request for reconsideration of this patent term adjustment calculation. The patentee must also include the information required by 37 CFR 1.705(b)(2) and the fee required by 37 CFR 1.18(e). If patentee does not file a timely request for reconsideration of this patent term adjustment calculation including the information required by 37 CFR 1.705(b)(2) and the fee required by 37 CFR 1.18(e), the USPTO will issue a certificate of correction reflecting the PTA determination noted above.

Patentee should be aware that in order to preserve the right to review in the United States District Court for the District of Columbia of the USPTO patent term adjustment determination, patentee must ensure that he or she also take the steps required under 35 U.S.C. 154(b)(4)(A) in a timely manner. Nothing in the request for recalculation should be construed as providing an alternative time frame for commencing a civil action under 35 U.S.C. 154(b)(4)(A).

Any questions concerning this decision should be directed to the Office of Patent Legal Administration at 571-272-7702.

UNITED STATES PATENT AND TRADEMARK OFFICE

COMMISSIONER FOR PATENTS
UNITED STATES PATENT AND TRADEMARK OFFICE
P.O. BOX 1450
ALEXANDRIA, VA 22313-1450
www.uspto.gov

Patton Boggs, LLP
2001 Ross Avenue, Suite 3000
Dallas, TX 75201

MAILED

FEB 11 2009

OFFICE OF PETITIONS

In re Application of	:	
Michelle A. Tecco et al.	:	
Application No. 11/144,003	:	DECISION ON PETITION
Filed: June 2, 2005	:	TO WITHDRAW
Attorney Docket No. 50172/P002US	:	FROM RECORD
	:	

This is a decision on the Request to Withdraw as attorney or agent of record under 37 C.F.R. § 1.36(b), filed January 7, 2009.

The request is **moot because a revocation of power of attorney has been filed**.

A review of the file record indicates that the power of attorney to V. Craig Belair and all attorneys/agents associated with customer number 44124 have been revoked by the assignee of the patent application on January 22, 2009. Accordingly, the request to withdraw under 37 C.F.R. § 1.36(b) is moot.

All future communications from the Office will be directed to the below-listed address until otherwise notified by applicant.

Telephone inquires concerning this decision should be directed to Kimberly Inabinet at 571-272- 4618.

Kimberly Inabinet
Petitions Examiner
Office of Petitions

cc: Winstead, PC
P.O. Box 50784
Dallas, TX 75201

UNITED STATES PATENT AND TRADEMARK OFFICE

Commissioner for Patents
United States Patent and Trademark Office
P.O. Box 1450
Alexandria, VA 22313-1450
www.uspto.gov

WINSTEAD PC
P.O. BOX 50784
DALLAS, TX 75201

MAILED

MAY 14 2009

OFFICE OF PETITIONS

In re Application of Tecco et al. :
Application No. 11/144,003 :
Filing Date: June 2, 2005 :
Attorney Docket No. 50172-P002US :

Decision on Petition

This is a decision on the petition under 37 CFR 1.137(b), filed February 28, 2009, to revive the above-identified application.

The petition is **granted**.

The above-identified application became abandoned for failure to reply in a timely manner to the non-final Office action mailed July 9, 2008, which set a shortened statutory period for reply of three (3) months. An extension of time under the provisions of 37 CFR 1.136(a) was not obtained. Accordingly, the above-identified application became abandoned on October 10, 2008.

The instant petition requests revival of the application.

A grantable petition under 37 CFR 1.137(b) must be accompanied by:

(1) the reply required to the outstanding Office action or notice, unless previously filed,
(2) the petition fee,
(3) a statement that the entire delay in filing the required reply from the due date for the reply until the filing of a grantable petition pursuant to 37 CFR 1.137(b) was unintentional, and
(4) a terminal disclaimer and fee if the application was filed on or before June 8, 1995 or if the application is a design application.

Petitioner has submitted a reply to the non-final Office action. Petitioner has submitted the required petition fee. Petitioner has stated the entire delay in filing the required reply from the due date for the reply until the filing of a grantable petition pursuant to 37 CFR 1.137(b) was unintentional.

Petitioner has met the requirements to revive the above-identified application pursuant to 37 CFR 1.137(b). Therefore, the petition is granted and the application is revived.

The petition is accompanied by payment of $555 for a three-month extension of time. However, an extension of time is unnecessary when reviving an application. Therefore, the $555 has been credited back to petitioner's deposit account.

Technology Center Art Unit 1615 will be informed of the instant decision and the application will be further examined in due course.

Telephone inquiries regarding this communication should be directed to Petitions Attorney Steven Brantley at (571) 272-3203.

Charles Steven Brantley
Senior Petitions Attorney
Office of Petitions

UNITED STATES PATENT AND TRADEMARK OFFICE

Commissioner for Patents
United States Patent and Trademark Office
P.O. Box 1450
Alexandria, VA 22313-1450
www.uspto.gov

Rene A. Vazquez
Williams Mullen
8270 Greensboro Drive, Suite 700
McLean VA 22102

COPY MAILED
OCT 01 2008

In re Application of	:	
David Bagley	:	
Application No. 11/144,047	:	DECISION GRANTING PETITION
Filed: June 3, 2005	:	UNDER 37 CFR 1.313(c)(2)
Attorney Docket No. AFW-0093	:	

This is a decision on the petition under 37 CFR 1.313(c)(2), filed September 30, 2008, to withdraw the above-identified application from issue after payment of the issue fee.

The petition is **GRANTED**.

The above-identified application is withdrawn from issue for consideration of a submission under 37 CFR 1.114 (request for continued examination). *See* 37 CFR 1.313(c)(2).

Petitioner is advised that the issue fee paid on August 25, 2008 cannot be refunded. If, however, this application is again allowed, petitioner may request that it be applied towards the issue fee required by the new Notice of Allowance.[1]

Telephone inquiries should be directed to Terri Williams at (571) 272-2991.

This application is being referred to Technology Center AU 1797 for processing of the request for continued examination under 37 CFR 1.114 and for consideration of the concurrently filed information disclosure statement.

Terri Williams
Petitions Examiner
Office of Petitions

---

[1] *The request to apply the issue fee to the new Notice may be satisfied by completing and returning the new Part B – Fee(s) Transmittal Form (along with any balance due at the time of submission). Petitioner is advised that the Issue Fee Transmittal Form must be completed and timely submitted to avoid abandonment of the application.*

UNITED STATES PATENT AND TRADEMARK OFFICE

Commissioner for Patents
United States Patent and Trademark Office
P.O. Box 1450
Alexandria, VA 22313-1450
www.uspto.gov

Rene A. Vazquez
Williams Mullen
8270 Greensboro Drive, Suite 700
McLean VA 22102

COPY MAILED
OCT 01 2008

In re Application of	:	
David Bagley	:	
Application No. 11/144,050	:	DECISION GRANTING PETITION
Filed: June 30, 2005	:	UNDER 37 CFR 1.313(c)(2)
Attorney Docket No. AFW-0094	:	

This is a decision on the petition under 37 CFR 1.313(c)(2), filed September 30, 2008, to withdraw the above-identified application from issue after payment of the issue fee.

The petition is **GRANTED**.

The above-identified application is withdrawn from issue for consideration of a submission under 37 CFR 1.114 (request for continued examination). *See* 37 CFR 1.313(c)(2).

Petitioner is advised that the issue fee paid on August 29, 2008 cannot be refunded. If, however, this application is again allowed, petitioner may request that it be applied towards the issue fee required by the new Notice of Allowance.[1]

Telephone inquiries should be directed to Terri Williams at (571) 272-2991.

This application is being referred to Technology Center AU 1797 for processing of the request for continued examination under 37 CFR 1.114 and for consideration of the concurrently filed information disclosure statement.

Terri Williams
Terri Williams
Petitions Examiner
Office of Petitions

---

[1] *The request to apply the issue fee to the new Notice may be satisfied by completing and returning the new Part B – Fee(s) Transmittal Form (along with any balance due at the time of submission). Petitioner is advised that the Issue Fee Transmittal Form* ***must*** *be completed and timely submitted to avoid abandonment of the application.*

UNITED STATES PATENT AND TRADEMARK OFFICE

Commissioner for Patents
United States Patent and Trademark Office
P.O. Box 1450
Alexandria, VA 22313-1450
www.uspto.gov

Rene A. Vazquez
Williams Mullen
8270 Greensboro Drive, Suite 700
McLean VA 22102

COPY MAILED
SEP 22 2008

In re Application of	:	
David Bagley	:	
Application No. 11/144,054	:	DECISION GRANTING PETITION
Filed: June 3, 2005	:	UNDER 37 CFR 1.313(c)(2)
Attorney Docket No. AFW-0082	:	

This is a decision on the petition under 37 CFR 1.313(c)(2), filed September 22, 2008, to withdraw the above-identified application from issue after payment of the issue fee.

The petition is **GRANTED**.

The above-identified application is withdrawn from issue for consideration of a submission under 37 CFR 1.114 (request for continued examination). *See* 37 CFR 1.313(c)(2).

Petitioner is advised that the issue fee paid on August 14, 2008 cannot be refunded. If, however, this application is again allowed, petitioner may request that it be applied towards the issue fee required by the new Notice of Allowance.[1]

There is no indication that the person signing the petition was ever given a power of attorney to prosecute the application. If the person signing the petition desires to receive future correspondence regarding this application, the appropriate power of attorney documents must be submitted. While a courtesy copy of this decision is being mailed to the person signing the petition, all future correspondence will be directed to the address currently of record until appropriate instructions are received.

Telephone inquiries should be directed to Terri Williams at (571) 272-2991.

---

[1] *The request to apply the issue fee to the new Notice may be satisfied by completing and returning the new Part B – Fee(s) Transmittal Form (along with any balance due at the time of submission). Petitioner is advised that the Issue Fee Transmittal Form* ***must*** *be completed and timely submitted to avoid abandonment of the application.*

This application is being referred to Technology Center AU 1797 for processing of the request for continued examination under 37 CFR 1.114 and for consideration of the concurrently filed information disclosure statement.

Terri Williams
Petitions Examiner
Office of Petitions

cc: **William Mullen**
222 Central Park Avenue, Suite 1700
Virginia Beach, VA 23462

UNITED STATES PATENT AND TRADEMARK OFFICE

Commissioner for Patents
United States Patent and Trademark Office
P.O. Box 1450
Alexandria, VA 22313-1450
www.uspto.gov

Rene A. Vazquez
Williams Mullen
8270 Greensboro Drive, Suite 700
McLean VA 22102

COPY MAILED
SEP 22 2008

COPY MAILED
SEP 22 2008

In re Application of	:	
David Bagley	:	
Application No. 11/144,060	:	DECISION GRANTING PETITION
Filed: June 3, 2005	:	UNDER 37 CFR 1.313(c)(2)
Attorney Docket No. AFW-0088	:	

This is a decision on the petition under 37 CFR 1.313(c)(2), filed September 22, 2008, to withdraw the above-identified application from issue after payment of the issue fee.

The petition is **GRANTED**.

The above-identified application is withdrawn from issue for consideration of a submission under 37 CFR 1.114 (request for continued examination). *See* 37 CFR 1.313(c)(2).

Petitioner is advised that the issue fee paid on August 14, 2008 cannot be refunded. If, however, this application is again allowed, petitioner may request that it be applied towards the issue fee required by the new Notice of Allowance.[1]

There is no indication that the person signing the petition was ever given a power of attorney to prosecute the application. If the person signing the petition desires to receive future correspondence regarding this application, the appropriate power of attorney documents must be submitted. While a courtesy copy of this decision is being mailed to the person signing the petition, all future correspondence will be directed to the address currently of record until appropriate instructions are received.

Telephone inquiries should be directed to Terri Williams at (571) 272-2991.

---

[1] *The request to apply the issue fee to the new Notice may be satisfied by completing and returning the new Part B – Fee(s) Transmittal Form (along with any balance due at the time of submission). Petitioner is advised that the Issue Fee Transmittal Form* ***must*** *be completed and timely submitted to avoid abandonment of the application.*

This application is being referred to Technology Center AU 1797 for processing of the request for continued examination under 37 CFR 1.114 and for consideration of the concurrently filed information disclosure statement.

Terri Williams
Petitions Examiner
Office of Petitions

cc: **William Mullen**
222 Central Park Avenue, Suite 1700
Virginia Beach, VA 23642

UNITED STATES PATENT AND TRADEMARK OFFICE

Commissioner for Patents
United States Patent and Trademark Office
P.O. Box 1450
Alexandria, VA 22313-1450
www.uspto.gov

FOX ROTHSCHILD LLP
PRINCETON PIKE CORPORATE
CENTER
2000 Market Street
Tenth Floor
Philadelphia PA 19103

COPY MAILED

JUN 19 2009

OFFICE OF PETITIONS

In re Application of

Chandran, et al.

Application No. 11/144,087

Filed: June 3, 2005

Attorney Docket No. 70439.00105

DECISION ON PETITION

This is a decision on the petition under 37 CFR 1.137(b), filed May 19, 2009, to revive the above-identified application.

The petition is **GRANTED**.

The above-identified application became abandoned for failure to file a proper response to the final Office action mailed November 17, 2008. The final Office action set a shortened statutory period for reply of three months from its mailing date. A response was not received within the allowable period and the application became abandoned on August 20, 2008.

The Request for Continued Examination and amendment filed May 19, 2009, are noted.

The application file is being forwarded to Technology Center 1700, GAU 1792 for further processing.

Telephone inquiries concerning this decision should be directed to the undersigned at (571) 272-3222.

Kenya A. McLaughlin
Petitions Attorney
Office of Petitions

UNITED STATES PATENT AND TRADEMARK OFFICE

Commissioner for Patents
United States Patent and Trademark Office
P.O. Box 1450
Alexandria, VA 22313-1450
www.uspto.gov

In re Application of	:	
Cole, et al.	:	
Application No. 11/144,091	:	DECISION ON PETITION
Filing Date: June 2, 2005	:	
For: METHOD AND APPARATUS FOR PREDICTING	:	
PREGNANCY OUTCOME	:	

This is a decision on the petition under 37 CFR § 1.48(b) filed October 2, 2006. On October 2, 2006, the present petition and a check for $130.00 petition fee were filed. Petitioners request amendment of the inventorship to delete Francis W. BYRN. In support of the petition, a statement from inventor Francis W. BYRN acknowledging that she did not invent the claimed subject matter, has been submitted. Petitioners request that the actual inventorship be given as Laurence A. COLE and Jaime M. RILEY.

37 CFR 1.48 Correction of inventorship states, in part:

(b) Nonprovisional application —fewer inventors due to amendment or cancellation of claims . If the correct inventors are named in a nonprovisional application, and the prosecution of the nonprovisional application results in the amendment or cancellation of claims so that fewer than all of the currently named inventors are the actual inventors of the invention being claimed in the nonprovisional application, an amendment must be filed requesting deletion of the name or names of the person or persons who are not inventors of the invention being claimed. If the application is involved in an interference, the amendment must comply with the requirements of this section and must be accompanied by a motion under § 1.634. Amendment of the inventorship requires:
(1) A request, signed by a party set forth in § 1.33(b), to correct the inventorship that identifies the named inventor or inventor's being deleted and acknowledges that the inventor's invention is no longer being claimed in the nonprovisional application; and
(2) The processing fee set forth in § 1.17(i).

A review of the record reveals that petitioner has complied with all the conditions in 37 CFR § 1.48(a). The petition is granted. A corrected filing receipt naming the actual inventors of the above-identified patent, namely, Laurence A. COLE and Jaime M. RILEY.

PETITION GRANTED

Jill Warden
Supervisory Patent Examiner
Art Unit 1743

Henry D. Coleman
714 Colorado Avenue
Bridgeport, CT 06605

UNITED STATES PATENT AND TRADEMARK OFFICE

UNITED STATES DEPARTMENT OF COMMERCE
United States Patent and Trademark Office
Address: COMMISSIONER FOR PATENTS
P.O. Box 1450
Alexandria, Virginia 22313-1450
www.uspto.gov

Henry D. Coleman
714 Colorado Avenue
Bridgeport, CT 06605

Mail Date: 04/21/2010

Applicant	: Laurence A. Cole	: DECISION ON REQUEST FOR
Patent Number	: 7572639	: RECALCULATION of PATENT
Issue Date	: 08/11/2009	: TERM ADJUSTMENT IN VIEW
Appliction No	: 11/144,091	: OF WYETH AND NOTICE OF INTENT TO
Filed	: 06/02/2005	: ISSUE CERTIFICATE OF CORRECTION
		:

The Request for Recalculation is **GRANTED** to the extent indicated.

The patent term adjustment has been determined to be **1037** days. The USPTO will *sua sponte* issue a certificate of correction reflecting the amount of PTA days determined by the recalculation.

Prior to the issuance of the certificate of correction, the USPTO will afford patentee an opportunity to be heard and request reconsideration. Accordingly, patentee has **one month or thirty (30) days**, whichever is longer, to file a request for reconsideration of this patent term adjustment calculation. See 35 U.S.C. 154(b)(3)(B)(ii) and 37 CFR 1.322(a)(4). No extensions of time will be granted under 37 CFR 1.136.

Patentee should use document code PET.OP if electronically filing a request for reconsideration of this patent term adjustment calculation. The patentee must also include the information required by 37 CFR 1.705(b)(2) and the fee required by 37 CFR 1.18(e). If patentee does not file a timely request for reconsideration of this patent term adjustment calculation including the information required by 37 CFR 1.705(b)(2) and the fee required by 37 CFR 1.18(e), the USPTO will issue a certificate of correction reflecting the PTA determination noted above.

Patentee should be aware that in order to preserve the right to review in the United States District Court for the District of Columbia of the USPTO patent term adjustment determination, patentee must ensure that he or she also take the steps required under 35 U.S.C. 154(b)(4)(A) in a timely manner. Nothing in the request for recalculation should be construed as providing an alternative time frame for commencing a civil action under 35 U.S.C. 154(b)(4)(A).

Any questions concerning this decision should be directed to the Office of Patent Legal Administration at 571-272-7702.

UNITED STATES PATENT AND TRADEMARK OFFICE

Commissioner for Patents
United States Patent and Trademark Office
P.O. Box 1450
Alexandria, VA 22313-1450
www.uspto.gov

FOLEY & LARDNER
2029 CENTURY PARK EAST
SUITE 3500
LOS ANGELES, CA 90067

COPY MAILED

JUL 26 2006

OFFICE OF PETITIONS

In re Application of :
Bac Pham et al :
Application No. 11/144,096 :
Filed: June 3, 2005 :
Attorney Docket No. 3123-650 (043886-0242) :

ON PETITION

This is in response to the petition under 37 CFR 1.47(a), filed December 27, 2005 and resubmitted on April 10, 2006.

The petition is dismissed.

Rule 47 applicant is given TWO MONTHS from the mailing date of this decision to reply, correcting the below-noted deficiencies. Any reply should be entitled "Request for Reconsideration of Petition Under 37 CFR 1.47(a)," and should only address the deficiencies noted below, except that the reply may include an oath or declaration executed by the non-signing inventor. **FAILURE TO RESPOND WILL RESULT IN ABANDONMENT OF THE APPLICATION.** Any extensions of time will be governed by 37 CFR 1.136(a).

A grantable petition under 37 CFR 1.47(a) requires: (1) proof that the non-signing inventor cannot be reached or refuses to sign the oath or declaration after having been presented with the application papers (specification, claims and drawings); (2) an acceptable oath or declaration in compliance with 35 U.S.C. §§ 115 and 116; (3) the petition fee; and (4) a statement of the last known address of the non-signing inventor. Applicant lacks item (1) set forth above.

As to item (1), the applicable statute (35 USC 116) requires that a "diligent effort" have been expended in attempting to find or reach the nonsigning inventor. See MPEP 409.03(a).

In the instant case, Rule 47 applicant has failed to show or provide proof that the nonsigning inventor has refused to sign the declaration after having been presented with a copy of the application papers (specification, claims, and drawings). Before an allegation can be made that the inventor has refused to sign an oath or declaration, she must have been presented with a copy of the application papers. The current record fails to demonstrate that the inventor was ever presented with a copy of the application papers. Did the nonsigning inventor receive a copy of the application papers? Unless the

nonsigning inventor was presented with a copy of the application papers, she could not attest that she has "reviewed and understands the application papers" and therefore could not sign the declaration for the instant application. See MPEP 409.03(d). While it is recognized that efforts have been made to contact the inventor, it does appear that the certified letter was forwarded to the "San Juan Capistrano" address. Accordingly, petitioner should at least send by certified letter a copy of the application papers (specification, claims, and drawings) to the last known address, in the hope that the correspondence will be forwarded to the San Juan Capistrano address. Petitioner must show that a copy of the application papers was presented to the nonsigning inventor or attempted to be presented, at the last known address of the inventor. A cover letter of instructions should accompany the mailing of the application papers setting a deadline or a statement that no response will constitute a refusal. This sort of ultimatum lends support to a finding of refusal by conduct. The proof of the pertinent events should be made by a statement of someone with firsthand knowledge of the events and should include documentary evidence, such as certified mail return receipt, cover letter of instructions, telegrams, etc. See MPEP 409.03(d).

When it is concluded by the rule 47 applicant that an omitted inventor's conduct constitutes a refusal, all facts upon which that conclusion is based should be stated in an affidavit or declaration. If there is documentary evidence to support facts alleged in the affidavit or declaration, such evidence must be submitted.

Whenever an omitted inventor gives a reason for refusing to sign the application oath or declaration, that reason should be stated in the affidavit or declaration.

Further correspondence with respect to this matter should be addressed as follows:

By mail: Mail Stop PETITION
Commissioner for Patents
Post Office Box 1450
Alexandria, VA 22313-1450

By hand: Customer Service Window
Randolph Building
401 Dulany Street
Alexandria, VA 22314

By fax: (571) 273-8300
Attn: Office of Petitions

Telephone inquiries related to this decision should be directed to the undersigned at (571) 272-3218.

Frances Hicks
Petitions Examiner
Office of Petitions

UNITED STATES PATENT AND TRADEMARK OFFICE

COMMISSIONER FOR PATENTS
UNITED STATES PATENT AND TRADEMARK OFFICE
P.O. BOX 1450
ALEXANDRIA, VA 22313-1450
www.uspto.gov

Paper No.

FOLEY & LARDNER
2029 CENTURY PARK EAST
SUITE 3500
LOS ANGELES CA 90067

COPY MAILED

FEB 21 2007

OFFICE OF PETITIONS

In re Application of	:
Bac Pham and	:
Xiaokun Chew	: DECISION ACCORDING STATUS
Application No. 11/144,096	: UNDER 37 C.F.R. § 1.47(a)
Filed: June 3, 2005	:
Atty Docket No. 3123-650	:
(043886-0242)	:

This is a decision on the PETITION UNDER 37 CFR 1.47(a) filed October 26, 2006.

The petition is **GRANTED**.

The above-identified application was filed on June 3, 2005, without an executed oath or declaration. In response to the "Notice to File Missing Parts of Application" mailed June 30, 2005, on December 27, 2005, applicant filed the initial petition under 37 CFR 1.47(a). However, by decision mailed July 26, 2006, the petition was dismissed for failure to provide adequate proof of the unavailability of nonsigning inventor Chew.

On instant renewed petition, applicant has cured this deficiency. By statement of facts of Ted Rittmaster and Maureen Sileo, and supporting documentary evidence, applicant has shown that after having been presented with the application papers inventor Chew is unavailable to join in the application. She has not responded to the presentation of all of the application papers at her last known address. It is noted that the evidence confirms that the papers were delivered to the address

determined to be her last known. Further, diligent efforts were made to locate the inventor and to verify her address.

The declaration filed December 27, 2005, has been reviewed and found in compliance with § 1.63. The petition includes the petition fee and the last known address of inventor Chew.

In view thereof, this application is hereby accorded Rule 1.47(a) status.

As provided in new Rule 1.47(c), this Office will forward notice of this application's filing to the non-signing inventor at the address given in the petition. Notice of the filing of this application will also be published in the Official Gazette.

Telephone inquiries related to this decision should be directed to the undersigned at (571) 272-3219.

Nancy Johnson
Senior Petitions Attorney
Office of Petitions

UNITED STATES PATENT AND TRADEMARK OFFICE

COMMISSIONER FOR PATENTS
UNITED STATES PATENT AND TRADEMARK OFFICE
P.O. BOX 1450
ALEXANDRIA, VA 22313-1450
www.uspto.gov

Xiaokun Chew
30672 Marbella Vis
San Juan Capistrano, CA
92675-1720

COPY MAILED

FEB 21 2007

OFFICE OF PETITIONS

In re Application of :
Bac Pham and :
Xiaokun Chew :
Application No. 11/144,096 : LETTER
Filed: June 3, 2005 :
Atty Docket No. 3123-650 :
(043886-0242) :

Dear Ms. Chew:

You are named as a joint inventor in the above-identified United States patent application filed under the provisions of 35 U.S.C. 116 (United States Code) and 37 CFR 1.47(a), Rules of Practice in Patent Cases. Should a patent be granted on the application you will be designated therein as a joint inventor.

As a named inventor you are entitled to inspect any paper in the file wrapper of the application, order copies of all or any part thereof (at a prepaid cost per 37 CFR 1.19) or make your position of record in the application. Alternatively, you may arrange to do any of the preceding through a registered patent attorney or agent presenting written authorization from you. If you care to join the application, counsel of record (see below) would presumably assist you. Joining in the application would entail the filing of an appropriate oath or declaration by you pursuant to 37 CFR 1.63. However, no action on your part is required for this patent to issue with you as a named inventor.

Telephone inquiries regarding this communication should be directed to Petitions Attorney Nancy Johnson at (571) 272-3219.

Requests for information regarding your application should be directed to the File Information Unit at (703) 308-2733. Information regarding how to pay for and order a copy of the application, or a specific paper in the application, should be directed to the Certification Division at (571) 272-3150 or 1-800-972-6382 (outside the Washington D.C. area).

Nancy Johnson
Senior Petitions Attorney
Office of Petitions

FOLEY & LARDNER
2029 CENTURY PARK EAST
SUITE 3500
LOS ANGELES CA 90067

UNITED STATES PATENT AND TRADEMARK OFFICE

Commissioner for Patents
United States Patent and Trademark Office
P.O. Box 1450
Alexandria, VA 22313-1450
www.uspto.gov

GUNNISON MCKAY & HODGSON, LLP
1900 GARDEN ROAD
SUITE 220
MONTEREY, CA 93940

COPY MAILED

JAN 0 5 2006

OFFICE OF PETITIONS

In re Application of
Shailender Chaudhry et al.
Application No. 11/144,097
Filed: June 20, 2005
Attorney Docket No. SUN040800

: DECISION ACCORDING STATUS
: UNDER 37 CFR 1.47(a)

This is in response to the petition filed December 5, 2005 under 37 CFR 1.47(a).

The petition is **GRANTED**.

The above-identified application was filed on June 2, 2005, naming Shailender Chaudhry, Quinn A. Jacobson and Ashley Saulsbury as joint inventors but without a signed declaration. Accordingly, on July 1, 2005, a "Notice To File Missing Parts of Application" was mailed, requiring *inter alia* a properly executed oath or declaration.

In response, an oath or declaration executed by all inventors except joint inventor Jacobson, a petition under 37 CFR 1.47(a) and a request for a three month extension of time was filed. The petition argues that joint inventor Jacobson has refused to sign the oath or declaration and to cooperate with the filing of the instant application.

A grantable petition under 37 CFR 1.47(a) requires: (1) proof that the non-signing inventor cannot be reached or refuses to sign the oath or declaration after having been presented with the application papers (specification, claims and drawings); (2) an acceptable oath or declaration in compliance with 35 U.S.C. §§ 115 and 116; (3) the petition fee; and (4) a statement of the last known address of the non-signing inventor.

The petition bears proof that joint inventor Jacobson has expressly, in writing, refused to accept receipt of the application papers and to cooperate with the filing of the instant application. Petitioners state further that Mr. Jacobson has advised that he will also not be able to cooperate with the filing of <u>any</u> applications filed by SUN Microsystems as any such cooperation would be a conflict of interest in view of his current employment with INTEL, a competitor of SUN Microsystems.

The above-identified application and papers have been reviewed and found in compliance with 37 CFR 1.47(a). In view thereof, this application is hereby <u>accorded Rule 1.47(a) status</u>.

Thus, as provided in Rule 1.47c, this Office will forward notice of this application's filing to the non-signing inventor at the address given in the petition. Notice of the filing of this application will also be published in the Official Gazette.

This matter is being referred to the Office of Initial Patent Examination for further pre-examination processing.

Telephone inquiries concerning this matter may be directed to the undersigned Petitions Attorney at (571) 272-3212.

Patricia Faison-Ball

Patricia Faison-Ball
Senior Petitions Attorney
Office of Petitions

UNITED STATES PATENT AND TRADEMARK OFFICE

Commissioner for Patents
United States Patent and Trademark Office
P.O. Box 1450
Alexandria, VA 22313-1450
www.uspto.gov

QUINN A. JACOBSON
598 SUNNYMOUNT AVE.
SUNNYVALE, CA 94087

COPY MAILED

JAN 0 5 2006

OFFICE OF PETITIONS

In re Application of
Shailender Chaudhry et al.
Application No. 11/144,097
Filed: June 2, 2005
For: LOGGING OF LEVEL-TWO CACHE TRANSACTIONS INTO BANKS OF THE LEVEL-TWO CACHE FOR SYSTEM ROLLBACK

Dear Mr. Jacobson:

You are named as a joint inventor in the above identified United States patent application, filed under the provisions of 35 U.S.C. 116 (United States Code), and 37 CFR 1.47(a), Rules of Practice in Patent Cases. Should a patent be granted on the application you will be designated therein as a joint inventor.

As a named inventor you are entitled to inspect any paper in the file wrapper of the application, order copies of all or any part thereof (at a prepaid cost per 37 CFR 1.19) or make your position of record in the application. Alternatively, you may arrange to do any of the preceding through a registered patent attorney or agent presenting written authorization from you. If you care to join the application, counsel of record (see below) would presumably assist you. Joining in the application would entail the filing of an appropriate oath or declaration by you pursuant to 37 CFR 1.63.

Telephone inquiries regarding this communication should be directed to the undersigned Petitions Attorney at (571) 272-3212. Requests for information regarding your application should be directed to the File Information Unit at 703/308-2733. Information regarding how to pay for and order a copy of the application, or a specific paper in the application, should be directed to Certification Division at 703/308-9726 or 1-800-972-6382 (outside the Washington D.C. area).

Patricia Faison-Ball

Patricia Faison-Ball
Senior Petitions Attorney
Office of Petitions

cc:
GUNNISON MCKAY & HODGSON, LLP
1900 GARDEN ROAD
SUITE 220
MONTEREY, CA 93940

UNITED STATES PATENT AND TRADEMARK OFFICE

UNITED STATES DEPARTMENT OF COMMERCE
United States Patent and Trademark Office
Address: COMMISSIONER FOR PATENTS
P.O. Box 1450
Alexandria, Virginia 22313-1450
www.uspto.gov

DEAN D. SMALL
THE SMALL PATENT LAW GROUP LLP
225 S. MERAMEC, STE. 725T
ST. LOUIS, MO 63105

Mail Date: 04/20/2010

Applicant	: Ytzhak Klein	: DECISION ON REQUEST FOR
Patent Number	: 7592596	: RECALCULATION of PATENT
Issue Date	: 09/22/2009	: TERM ADJUSTMENT IN VIEW
Appliction No	: 11/144,120	: OF WYETH AND NOTICE OF INTENT TO
Filed	: 06/03/2005	: ISSUE CERTIFICATE OF CORRECTION
		:

The Request for Recalculation is **GRANTED** to the extent indicated.

The patent term adjustment has been determined to be **945** days. The USPTO will *sua sponte* issue a certificate of correction reflecting the amount of PTA days determined by the recalculation.

Prior to the issuance of the certificate of correction, the USPTO will afford patentee an opportunity to be heard and request reconsideration. Accordingly, patentee has **one month or thirty (30) days**, whichever is longer, to file a request for reconsideration of this patent term adjustment calculation. See 35 U.S.C. 154(b)(3)(B)(ii) and 37 CFR 1.322(a)(4). No extensions of time will be granted under 37 CFR 1.136.

Patentee should use document code PET.OP if electronically filing a request for reconsideration of this patent term adjustment calculation. The patentee must also include the information required by 37 CFR 1.705(b)(2) and the fee required by 37 CFR 1.18(e). If patentee does not file a timely request for reconsideration of this patent term adjustment calculation including the information required by 37 CFR 1.705(b)(2) and the fee required by 37 CFR 1.18(e), the USPTO will issue a certificate of correction reflecting the PTA determination noted above.

Patentee should be aware that in order to preserve the right to review in the United States District Court for the District of Columbia of the USPTO patent term adjustment determination, patentee must ensure that he or she also take the steps required under 35 U.S.C. 154(b)(4)(A) in a timely manner. Nothing in the request for recalculation should be construed as providing an alternative time frame for commencing a civil action under 35 U.S.C. 154(b)(4)(A).

Any questions concerning this decision should be directed to the Office of Patent Legal Administration at 571-272-7702.

SPE RESPONSE FOR CERTIFICATE OF CORRECTION

Paper No.: _____

DATE : Jan. 2, 2008

TO SPE OF : ART UNIT 1624
SUBJECT : Request for Certificate of Correction for Appl. No.:/11/144126 /7428270

Please respond to this request for a certificate of correction within 7 days.

FOR IFW FILES:

Please review the requested changes/corrections as shown in the **COCIN** document(s) in the IFW application image. No new matter should be introduced, nor should the scope or meaning of the claims be changed.

Please complete the response (see below) and forward the completed response to scanning using document code **COCX**.

FOR PAPER FILES:

Please review the requested changes/corrections as shown in the attached certificate of correction. Please complete this form (see below) and forward it with the file to:

Certificates of Correction Branch (CofC)
South Tower - 9A22
Palm Location 7580

Magdalene Talley
Certificates of Correction Branch
703-308-9390 ext. 116

Thank You For Your Assistance

The request for issuing the above-identified correction(s) is hereby:
Note your decision on the appropriate box.

- [X] **Approved** — **All** changes apply.
- [ ] **Approved in Part** — Specify below which changes **do not** apply.
- [ ] **Denied** — State the reasons for denial below.

Comments: _____

1624

UNITED STATES PATENT AND TRADEMARK OFFICE

Commissioner for Patents
United States Patent and Trademark Office
P.O. Box 1450
Alexandria, VA 22313-1450
www.uspto.gov

APPLICATION NUMBER	FILING/RECEIPT DATE	FIRST NAMED APPLICANT	ATTORNEY DOCKET NUMBER
11/144,127	06/03/2005	Mark Meyerhofer	03226.000122.

FITZPATRICK CELLA HARPER & SCINTO
30 ROCKEFELLER PLAZA
NEW YORK NY 10112

DATE MAILED: March 20, 2007

DECISION GRANTING PETITION UNDER 37 CFR 1.138(d)
The declaration of express abandonment is recognized

This is in response to the petition under 37 CFR 1.138(d) filed March 15, 2007, requesting for a refund of any previously paid search fee and excess claims fee in the above-identified application.

The petition is granted.

The express abandonment is recognized. Any previously paid search fee and excess claims fee are hereby refunded.

Any inquiries concerning this decision should be directed to the Pre-Grant Publication Division at (703) 605-4283.

Barbara J. Debnam
Pre-Grant Publication Division

UNITED STATES PATENT AND TRADEMARK OFFICE

Commissioner for Patents
United States Patent and Trademark Office
P.O. Box 1450
Alexandria, VA 22313-1450
www.uspto.gov

MBHB/TRADING TECHNOLOGIES
300 SOUTH WACKER DRIVE
SUITE 3200
CHICAGO IL 60606

MAILED

JUL 13 2009

OFFICE OF PETITIONS

In re Application :
Simeon C. Peebler :
Application No. 11/144,134 : DECISION ON APPLICATION
Filed: June 3, 2005 : FOR PATENT TERM ADJUSTMENT
Attorney Docket No. 05-512 :

This is in response to the REQUEST FOR RECONSIDERATION OF THE PATENT TERM ADJUSTMENT filed June 17, 2009. Applicant requests that the determination of patent term adjustment be corrected from four hundred five (405) days to five hundred fifty-nine (559) days. Applicant requests this correction on the basis that the Office will take in excess of three years to issue this patent and in light of the recent court decision in Wyeth v. Dudas, No. 07-1492 (D.D.C. September 30, 2008).

As the instant application for patent term adjustment requests reconsideration of the patent term adjustment as it relates to the Office's failure to issue the patent within 3 years of the filing date, a decision is being **HELD IN ABEYANCE** until after the actual patent date. Knowledge of the actual date the patent issues is required to calculate the amount, if any, of additional patent term patentee is entitled to for Office failure to issue the patent within 3 years. See § 1.703(b). This is true even in this instance where a request for continued examination (RCE) was filed.

Applicant is given TWO (2) MONTHS from the issue date of the patent to file a written request for reconsideration of the patent term adjustment for Office failure to issue the patent within 3 years. A copy of this decision should accompany the request. Applicant may seek such consideration without payment of an additional fee. However, as to all other bases for seeking reconsideration of the patent term adjustment indicated in the patent, all requirements of § 1.705(d) must be met. Requests for reconsideration on other bases must be timely filed and must include payment of the required fee.

Rather than file the request for reconsideration of Patent Term Adjustment at the time of the mailing of the notice of allowance, applicant is advised that they may wait until the time of the issuance of the patent and file a request for reconsideration of the patent

term pursuant to 37 CFR 1.705(d). The USPTO notes that it does not calculate the amount of time earned pursuant to 37 CFR 1.702(b) until the time of the issuance of the patent and accordingly, the Office will consider any request for reconsideration of the patent term adjustment due to an error in the calculation of 37 CFR 1.702(b) to be timely if the request for reconsideration is filed within two months of the issuance of the patent.

The Office acknowledges submission of the $200.00 fee set forth in 37 CFR 1.18(e). No additional fees are required.

The application is being forwarded to the Office of Data Management for issuance of the patent. The patent term adjustment indicated on the patent (as shown on the Issue Notification mailed about three weeks prior to patent issuance) will include any additional adjustment accrued both for Office delay in issuing the patent more than four months after payment of the issue fee and satisfaction of all outstanding requirements, and for the Office taking in excess of three years to issue the patent (to the extent that the three-year period does not overlap with periods already accorded).

Telephone inquiries specific to this decision should be directed to Senior Petitions Attorney Patricia Faison-Ball at (571) 272-3212.

Kery A. Fries
Senior Legal Advisor
Office of Patent Legal Administration
Office of Deputy Commissioner
for Examination Policy

IN THE UNITED STATES PATENT AND TRADEMARK OFFICE
(Attorney Docket No. 05-512)

Appl. No.	:	11/144,134	Confirmation No. 9697
Applicant	:	Simeon C. Peebler	
Filed	:	06/03/2005	
Art Unit	:	3692	
Examiner	:	Benjamin S. Fields	

Commissioner for Patents
P.O. Box 1450
Alexandria, VA 22313-1450

REQUEST FOR RECONSIDERATION OF PATENT TERM ADJUSTMENT

Dear Sir:

Applicant requests reconsideration of the patent term adjustment (PTA) in light of the *Wyeth v. Dudas* decision (D.D.C., Memorandum Opinion for Case No. 07-1492, Sept. 30, 2008).

Applicant agrees with the USPTO's calculation of 497 days of "A delay" and 92 days of Applicant delay, which resulted in the Determination of Patent Term Adjustment mailed with the March 30, 2009 Notice of Allowance being equal to 405 days.

Pursuant to 37 C.F.R. § 1.705(b), Applicant hereby requests an additional 154 days of "B delay". Applicant arrived at this number by calculating 154 days as the difference between (a) the November 4, 2008 filing of a Request for Continued Examination (RCE) and (b) the June 3, 2008 3-year anniversary from filing. There is no overlap between "A delay" and "B delay".

Thus, Applicant respectfully requests that the USPTO reconsider the PTA calculation, and adjust the total from 405 days, up by 154 days, for a new total of **559 days**. If a telephone conference would expedite the prosecution of this Request for Reconsideration of Patent Term Adjustment, please contact the undersigned attorney at (312) 913-0001.

Respectfully submitted,

McDonnell Boehnen Hulbert & Berghoff LLP

Date: June 17, 2009

By: /Scott M. Miller/
Scott M. Miller, Reg. No. 62,967

UNITED STATES PATENT AND TRADEMARK OFFICE

Commissioner for Patents
United States Patent and Trademark Office
P.O. Box 1450
Alexandria, VA 22313-1450
www.uspto.gov

MBHB/TRADING TECHNOLOGIES
300 SOUTH WACKER DRIVE
SUITE 3200
CHICAGO IL 60606

COPY MAILED

DEC 22 2009

OFFICE OF PETITIONS

In re Patent No. 7,574,388	:
Issued: August 11, 2009	: DECISION ON REQUEST
Application No. 11/144,134	: FOR RECONSIDERATION OF
Filed: June 3, 2005	: PATENT TERM ADJUSTMENT
Attorney Docket No. 05-512	:

This is a decision on the "REQUEST FOR RECONSIDERATION OF PATENT TERM ADJUSTMENT" filed October 7, 2009 requesting that the patent term adjustment determination for the above-identified patent be changed from four hundred five (405) days to five hundred fifty-nine (559) days.

The request for reconsideration of patent term adjustment is **DISMISSED**.

On August 11, 2009, the above-identified application matured into US Patent No. 7,574,388 with a patent term adjustment of 405 days. This request for reconsideration of patent term adjustment was timely filed within two months of the issue date of the patent. See 37 CFR 1.705(d).

The Office acknowledges submission of the $200.00 fee set forth in 37 CFR 1.18(e). No additional fees are required.

Patentees request recalculation of the patent term adjustment based on the decision in Wyeth v. Dudas, 580 F. Supp. 2d 138, 88 U.S.P.Q. 2d 1538 (D.D.C. 2008). Patentees assert that in view of the decision in Wyeth, they are entitled to a total patent term adjustment of 559 days, which includes 154 days due to exceeding three year pendency.

Patentees do not dispute that the total period of Office delay is the sum of the period of Three Years Delay (154 days) and the period of Examination Delay (497 days) to the extent that these periods of delay are not overlapping. However, in effect, patentees contend that no portion of the Three Year Delay period overlaps with the period of examination delay. As such, patentees assert entitlement to a patent term adjustment of 559 days 497 + 154 reduced by 0 overlap – 92 (applicant delay)).

The Office contends that all 154 days for over three year pendency overlap with the 497 days accorded for Office delay during the pendency of the application, and thus, no additional days were entered for over three year delay. Patentees' calculation of the period of overlap is inconsistent with the Office's interpretation of this provision. 35 U.S.C. 154(b)(2)(A) limits the adjustment of patent term, as follows:

> to the extent that the periods of delay attributable to grounds specified in paragraph (1) overlap, the period of any adjustment granted under this subsection shall not exceed the actual number of days the issuance of the patent was delayed.

Likewise, 35 CFR 1.703(f) provides that:

> To the extent that periods of delay attributable to the grounds specified in § 1.702 overlap, the period of adjustment granted under this section shall not exceed the actual number of days the issuance of the patent was delayed.

As explained in *Explanation of 37 CFR 1.703(f) and of the United States Patent and Trademark Office Interpretation of 35 U.S.C. 154(b)(2)(A)*, 69 Fed. Reg. 34283 (June 21, 2004), the Office interprets 35 U.S.C. 154(b)(2)(A) as permitting either patent term adjustment under 35 U.S.C. 154(b)(1)(A)(i)-(iv), or patent term adjustment under 35 U.S.C. 154(b)(1)(B), but not as permitting patent term adjustment under both 35 U.S.C. 154(b)(1)(A)(i)-(iv) and 154(b)(1)(B). Accordingly, the Office implements the overlap provision as follows:

> If an application is entitled to an adjustment under 35 U.S.C. 154(b)(1)(B), the entire period during which the application was pending (except for periods excluded under 35 U.S.C. 154(b)(1)(B)(i)-(iii)), and not just the period beginning three years after the actual filing date of the application, is the period of delay under 35 U.S.C. 154(b)(1)(B) in determining whether periods of delay overlap under 35 U.S.C. 154(b)(2)(A). Thus, any days of delay for Office issuance of the patent more than 3 years after the filing date of the application, which overlap with the days of patent term adjustment accorded prior to the issuance of the patent will not result in any additional patent term adjustment. See 35 U.S.C. 154(b)(1)(B), 35 U.S.C. 154(b)(2)(A), and 37 CFR § 1.703(f). See *Changes to Implement Patent Term Adjustment Under Twenty Year Term; Final Rule*, 65 Fed. Reg. 56366 (Sept. 18, 2000). See also *Revision of Patent Term Extension and Patent Term Adjustment Provisions; Final Rule*, 69 Fed. Reg. 21704 (April 22, 2004), 1282 Off. Gaz. Pat. Office 100 (May 18, 2004). See also *Explanation*

of 37 CFR 1.703(f) and of the United States Patent and Trademark Office Interpretation of 35 U.S.C. 154(b)(2)(A), 69 Fed. Reg. 34283 (June 21, 2004).

As stated in the *Explanation of 37 CFR 1.703(f) and of the United States Patent and Trademark Office Interpretation of 35 U.S.C. 154(b)(2)(A)*, the Office has consistently taken the position that if an application is entitled to an adjustment under the three-year pendency provision of 35 U.S.C. 154(b)(1)(B), the entire period during which the application was pending before the Office (except for periods excluded under 35 U.S.C. 154(b)(1)(B)(i)-(iii)), and not just the period beginning three years after the actual filing date of the application, is the relevant period under 35 U.S.C. 154(b)(1)(B) in determining whether periods of delay "overlap" under 35 U.S.C. 154(b)(2)(A).

This interpretation is consistent with the statute. Taken together the statute and rule provide that to the extent that periods of delay attributable to grounds specified in 35 U.S.C. 154(b)(1) and in corresponding § 1.702 overlap, the period of adjustment granted shall not exceed the actual number of days the issuance of the patent was delayed.

As such, the period for over three-year pendency does not overlap only to the extent that the actual dates in the period beginning three years after the date on which the application was filed overlap with the actual dates in the periods for failure of the Office to take action within specified time frames. In other words, consideration of the overlap does not begin three years after the filing date of the application.

In this instance, the relevant period under 35 U.S.C. 154(b)(1)(B) in determining whether periods of delay "overlap" under 35 U.S.C. 154(b)(2)(A) is the entire period during which the application was pending before the Office, June 3, 2005, to the date the patent the first Request for Continued Examination was filed November 4, 2008. Prior to the issuance of the patent, 497 days of patent term adjustment were accorded for the Office failing to respond within a specified time frame during the pendency of the application. All of the 154 days for Office delay in issuing the patent overlap with the 497 days of Examination delay. During that time, the issuance of the patent was delayed by 497 days, not 497 + 154 days. The Office experienced 497 days of examination delay. Otherwise, the Office took all actions set forth in 37 CFR 1.702(a)(1) and (a)(2) within the prescribed time frames. Nonetheless, given the 154 days of Office delay and the time allowed within the time frames for processing and examination, the application was pending three years and 154 days. The Office did not delay 497 days and then an additional 154 days. Accordingly, 497 days of patent term adjustment (not 497 and 154 days) was properly entered. The period of delay of 154 days attributable to the delay in the issuance of the patent overlaps with the adjustment of 497 days attributable to grounds specified in § 1.702(a)(1) and (a)(2). Entry of both

periods is not warranted. 497 days is determined to be the actual number of days that the issuance of the patent was delayed, considering the 154 days over three years to the issuance of the patent.

Accordingly, at issuance, the Office properly entered 0 additional days of patent term adjustment for the Office taking in excess of three years to issue the patent.

In view thereof, no adjustment to the patent term will be made.

Telephone inquiries specific to this decision should be directed to Senior Petitions Attorney Patricia Faison-Ball at (571) 272-3212.

/Kery A. Fries/

Kery A. Fries
Senior Legal Advisor
Office of Patent Legal Administration
Office of Deputy Commissioner
for Examination Policy

UNITED STATES PATENT AND TRADEMARK OFFICE

UNITED STATES DEPARTMENT OF COMMERCE
United States Patent and Trademark Office
Address: COMMISSIONER FOR PATENTS
P.O. Box 1450
Alexandria, Virginia 22313-1450
www.uspto.gov

MBHB/TRADING TECHNOLOGIES
300 SOUTH WACKER DRIVE
SUITE 3200
CHICAGO, IL 60606

Mail Date: 04/20/2010

Applicant	: Simeon C. Peebler	: DECISION ON REQUEST FOR
Patent Number	: 7574388	: RECALCULATION of PATENT
Issue Date	: 08/11/2009	: TERM ADJUSTMENT IN VIEW
Appliction No	: 11/144,134	: OF WYETH AND NOTICE OF INTENT TO
Filed	: 06/03/2005	: ISSUE CERTIFICATE OF CORRECTION
		:

The Request for Recalculation is **GRANTED** to the extent indicated.

The patent term adjustment has been determined to be **558** days. The USPTO will *sua sponte* issue a certificate of correction reflecting the amount of PTA days determined by the recalculation.

Prior to the issuance of the certificate of correction, the USPTO will afford patentee an opportunity to be heard and request reconsideration. Accordingly, patentee has **one month or thirty (30) days**, whichever is longer, to file a request for reconsideration of this patent term adjustment calculation. See 35 U.S.C. 154(b)(3)(B)(ii) and 37 CFR 1.322(a)(4). No extensions of time will be granted under 37 CFR 1.136.

Patentee should use document code PET.OP if electronically filing a request for reconsideration of this patent term adjustment calculation. The patentee must also include the information required by 37 CFR 1.705(b)(2) and the fee required by 37 CFR 1.18(e). If patentee does not file a timely request for reconsideration of this patent term adjustment calculation including the information required by 37 CFR 1.705(b)(2) and the fee required by 37 CFR 1.18(e), the USPTO will issue a certificate of correction reflecting the PTA determination noted above.

Patentee should be aware that in order to preserve the right to review in the United States District Court for the District of Columbia of the USPTO patent term adjustment determination, patentee must ensure that he or she also take the steps required under 35 U.S.C. 154(b)(4)(A) in a timely manner. Nothing in the request for recalculation should be construed as providing an alternative time frame for commencing a civil action under 35 U.S.C. 154(b)(4)(A).

Any questions concerning this decision should be directed to the Office of Patent Legal Administration at 571-272-7702.

UNITED STATES PATENT AND TRADEMARK OFFICE

Commissioner for Patents
United States Patent and Trademark Office
P.O. Box 1450
Alexandria, VA 22313-1450
www.uspto.gov

Morrison & Foerster LLP
755 Page Mill Road
Palo Alto, CA 94304-1018

COPY MAILED

FEB 21 2008

In re Application of	:	
Kevin Kawasaki	:	
Application No. 11/144,153	:	DECISION ON PETITION
Filed: June 2, 2005	:	TO WITHDRAW
Attorney Docket No. 544122000301	:	FROM RECORD
	:	

This is a decision on the Request to Withdraw as attorney or agent of record under 37 C.F.R. § 1.36(b), filed November 20, 2007.

The request is **APPROVED**.

A grantable request to withdraw as attorney/agent of record must be signed by every attorney/agent seeking to withdraw or contain a clear indication that one attorney is signing on behalf of another/others. A request to withdraw will not be approved unless at least 30 (thirty) days would remain between the date of approval and the later of the expiration date of a time to file a response or the expiration date of the maximum time period which can be extended under 37 C.F.R. § 1.136(a).

The request was signed by Charles Holland on behalf of all attorneys of record. All attorneys/agents have been withdrawn. Applicant is reminded that there is no attorney of record at this time.

The request to change the correspondence of record is not acceptable as the requested correspondence address is not that of: (1) the first named signing inventor; or (2) an intervening assignee of the entire interest under 37 C.F.R 3.71. All future communications from the Office will be directed to the first named signing inventor t at the first copied address below until otherwise properly notified by the applicant.

There is no outstanding Office action at this time.

Telephone inquiries concerning this decision should be directed to Terri Williams at 571-272-2991.

T. Williams

Terri Williams
Petitions Examiner
Office of Petitions

cc: **Kevin Kawasaki**
1 Oxford Ct. North
Belmont, CA 94002

cc: **E. Thomas Wheelock**
Patent Attorney
P.O. Box 61168
Palo Alto, CA 94306

UNITED STATES PATENT AND TRADEMARK OFFICE

UNITED STATES DEPARTMENT OF COMMERCE
United States Patent and Trademark Office
Address: COMMISSIONER FOR PATENTS
P.O. Box 1450
Alexandria, Virginia 22313-1450
www.uspto.gov

APPLICATION NUMBER	FILING OR 371(C) DATE	FIRST NAMED APPLICANT	ATTY. DOCKET NO./TITLE
11/144,153	06/02/2005	Kevin Kawasaki	544122000301

CONFIRMATION NO. 3708

POWER OF ATTORNEY NOTICE

25226
MORRISON & FOERSTER LLP
755 PAGE MILL RD
PALO ALTO, CA 94304-1018

OC000000028392095

Date Mailed: 02/20/2008

NOTICE REGARDING CHANGE OF POWER OF ATTORNEY

This is in response to the Power of Attorney filed 11/20/2007.

- The withdrawal as attorney in this application has been accepted. Future correspondence will be mailed to the new address of record. 37 CFR 1.33.

/tswilliams/

Office of Initial Patent Examination (571) 272-4000 or 1-800-PTO-9199

UNITED STATES PATENT AND TRADEMARK OFFICE

UNITED STATES DEPARTMENT OF COMMERCE
United States Patent and Trademark Office
Address: COMMISSIONER FOR PATENTS
P.O. Box 1450
Alexandria, Virginia 22313-1450
www.uspto.gov

Perkins Coie
1201 Third Avenue, Suite 4800
Seattle, WA 98101-3099

Mail Date: 04/20/2010

Applicant	: Howard R. Levin	: DECISION ON REQUEST FOR
Patent Number	: 7647115	: RECALCULATION of PATENT
Issue Date	: 01/12/2010	: TERM ADJUSTMENT IN VIEW
Appliction No	: 11/144,173	: OF WYETH AND NOTICE OF INTENT TO
Filed	: 06/03/2005	: ISSUE CERTIFICATE OF CORRECTION
		:

The Request for Recalculation is **GRANTED** to the extent indicated.

The patent term adjustment has been determined to be **783** days. The USPTO will *sua sponte* issue a certificate of correction reflecting the amount of PTA days determined by the recalculation.

Prior to the issuance of the certificate of correction, the USPTO will afford patentee an opportunity to be heard and request reconsideration. Accordingly, patentee has **one month or thirty (30) days**, whichever is longer, to file a request for reconsideration of this patent term adjustment calculation. See 35 U.S.C. 154(b)(3)(B)(ii) and 37 CFR 1.322(a)(4). No extensions of time will be granted under 37 CFR 1.136.

Patentee should use document code PET.OP if electronically filing a request for reconsideration of this patent term adjustment calculation. The patentee must also include the information required by 37 CFR 1.705(b)(2) and the fee required by 37 CFR 1.18(e). If patentee does not file a timely request for reconsideration of this patent term adjustment calculation including the information required by 37 CFR 1.705(b)(2) and the fee required by 37 CFR 1.18(e), the USPTO will issue a certificate of correction reflecting the PTA determination noted above.

Patentee should be aware that in order to preserve the right to review in the United States District Court for the District of Columbia of the USPTO patent term adjustment determination, patentee must ensure that he or she also take the steps required under 35 U.S.C. 154(b)(4)(A) in a timely manner. Nothing in the request for recalculation should be construed as providing an alternative time frame for commencing a civil action under 35 U.S.C. 154(b)(4)(A).

Any questions concerning this decision should be directed to the Office of Patent Legal Administration at 571-272-7702.

UNITED STATES PATENT AND TRADEMARK OFFICE

Commissioner for Patents
United States Patent and Trademark Office
P.O. Box 1450
Alexandria, VA 22313-1450
www.uspto.gov

SAWYER LAW GROUP LLP
P.O. BOX 51418
PALO ALTO, CA 94303

COPY MAILED

MAR 17 2008

In re Application of	:	
BEDARIDA, Lorenzo et al.	:	
Application No. 11/144,174	:	DECISION ON PETITION
Filed: June 02, 2005	:	TO WITHDRAW
Attorney Docket No. **3235P**	:	FROM RECORD

This is a decision on the Request to Withdraw as attorney or agent of record under 37 C.F.R. § 1.36(b), filed January 02, 2008.

The request is **APPROVED**.

A grantable request to withdraw as attorney/agent of record must be signed by every attorney/agent seeking to withdraw or contain a clear indication that one attorney is signing on behalf of another/others. A request to withdraw will not be approved unless at least 30 (thirty) days would remain between the date of approval and the later of the expiration date of a time to file a response or the expiration date of the maximum time period which can be extended under 37 C.F.R. § 1.136(a).

The request was signed by Joseph A. Sawyer, Jr. on behalf of all attorneys of record who are associated with customer No. 29141. All attorneys/agents associated have been withdrawn. Applicant is reminded that there is no attorney of record at this time.

The request to change the correspondence of record is not acceptable as the requested correspondence address is not that of: (1) the first named signing inventor; or (2) an intervening assignee of the entire interest under 37 C.F.R 3.71. All future communications from the Office will be directed to the first named signing inventor.

There is an outstanding Office action mailed March 17, 2008 that requires a reply from the applicant.

Telephone inquiries concerning this decision should be directed to the undersigned at 571-272-4231.

Michelle R. Eason
Paralegal Specialist
Office of Petitions

cc: **LORENZO BEDARIDA**
P. ZA MARCONI 7A VIMERCATE
MILANO, ITALY 20059

cc: **SCHWEGMAN, LUNDBERG & WOESSNER / ATMEL**
P.O. BOX 2938
MINNEAPOLIS, MN 55402

UNITED STATES PATENT AND TRADEMARK OFFICE

Commissioner for Patents
United States Patent and Trademark Office
P.O. Box 1450
Alexandria, VA 22313-1450
www.uspto.gov

ERIC HANSCOM
7395 PORTAGE WAY
CARLSBAD CA 92011

COPY MAILED

JAN 08 2009

OFFICE OF PETITIONS

In re Application of	:	
Curtis Robert Lubben	:	
Application No. 11/144,186	:	DECISION ON PETITION
Filed: June 4, 2005	:	
Attorney Docket No. LUBBEN, POD HARNESS	:	

This is a decision on the petition under the unintentional provisions of 37 CFR 1.137(b), filed December 11, 2008, to revive the above-identified application.

The petition is **GRANTED**.

This application became abandoned for failure to timely pay the issue and publication fees on or before November 15, 2008, as required by the Notice of Allowance and Fee(s) Due, mailed August 15, 2008. Accordingly, the date of abandonment of this application is November 16, 2008.

The petition satisfies the requirements of 37 CFR 1.137(b) in that petitioner has supplied (1) the reply in the form of payment of the issue fee of $720 and the publication fee of $300, (2) the petition fee of $810; and (3) a proper statement of unintentional delay.

Telephone inquiries concerning this decision should be directed to Denise Williams at (571) 272-8930.

This application is being referred to the Office of Data Management for processing into a patent.

Andrea Smith
Petitions Examiner
Office of Petitions

UNITED STATES PATENT AND TRADEMARK OFFICE

Commissioner for Patents
United States Patent and Trademark Office
P.O. Box 1450
Alexandria, VA 22313-1450
www.uspto.gov

TEXAS INSTRUMENTS INCORPORATED
P O BOX 655474, M/S 3999
DALLAS TX 75265

COPY MAILED
NOV 3 0 2006
OFFICE OF PETITIONS

In re Application of :
Adam, et al. :
Application No. 11/144,202 : ON PETITION
Filed: June 2, 2005 :
Attorney Docket No. TI-36390.1 :
For: TRI-GATE LOW POWER DEVICE AND METHOD FOR MANUFACTURING THE SAME

This is a decision on the petition under 37 CFR 1.137(b), filed August 22, 2006 to revive the above-identified application. In addition, the transmittal letter is being treated as a petition under 1.181 to withdraw the holding of abandonment.

The petition under 37 CFR 1.181 is **GRANTED**.

The petition under 37 CFR 1.137(b) is **DISMISSED AS MOOT**.

The Office contended that the above-identified application became abandoned for failure to submit a reply to the December 14, 2005 non-final Office action, which set a three month extendable period for reply. No extensions of time or reply being received, the Office contended that this application became abandoned on March 15, 2006. A Notice of Abandonment was mailed on August 10, 2006.

Petitioners allege that the December 14, 2005 non-final Office action was not received.

The showing required to establish non-receipt of an Office communication must include:

1. A statement from the practitioner stating that the Office communication was not received by the practitioner and attesting to the fact that a search of the file jacket and docket records indicates that the Office communication was not received.
2. A copy of the docket record where the non-received Office communication would have been entered had it been received and docketed must be attached to and referenced in practitioner's statement.[1]

[1] See notice entitled "Withdrawing the Holding of Abandonment When Office Actions Are Not Received," 1156 O.G. 53 (November 16, 1993).

Petitioners have submitted a copy of the docket record where the requirement would have been entered had the December 14, 2005 non-final Office action been received. In addition, practitioner referenced the record in the petition and stated that a review of the application's file jacket and docket records for the December 14, 2005 non-final Office action was fruitless.

Petitioners have established non-receipt. The petition is **granted**, the Notice of Abandonment is **vacated**, and the holding of abandonment is withdrawn.

The petition under 37 CFR 1.137(b) is **DISMISSED AS MOOT**. The $1,500.00 petition fee will be credited to deposit account no. 20-0668.

It is unnecessary to re-mail the Office action in question because petitioners filed a response with the present petition. After the mailing of this decision, the application will be returned to Technology Center A.U. 2815 for consideration of the amendment filed on August 22, 2006.

Telephone inquiries may be directed to the undersigned at (571) 272-3230.

Shirene Willis Brantley

Shirene Willis Brantley
Senior Petitions Attorney
Office of Petitions

UNITED STATES PATENT AND TRADEMARK OFFICE

Commissioner for Patents
United States Patent and Trademark Office
P.O. Box 1450
Alexandria, VA 22313-1450
www.uspto.gov

ROPES & GRAY LLP
PATENT DOCKETING 39/361
1211 AVENUE OF THE AMERICAS
NEW YORK NY 10036-8704

MAILED

MAR 0 1 2010

OFFICE OF PETITIONS

In re Application of :
Cohen, et al. :
Application No. 11/144,222 : ON APPLICATION FOR
Filed: June 2, 2005 : PATENT TERM ADJUSTMENT
Atty Docket No. 000659-0032-103

This is in response to the APPLICATION FOR PATENT TERM ADJUSTMENT, filed September 24, 2009. Applicants submit that the patent term adjustment to be indicated on the patent is at minimum six hundred eighty-eight(688) days, not one hundred sixty-nine (169) days as calculated by the Office as of the mailing of the initial determination of patent term adjustment. Applicants request this correction on the basis that the Office will take in excess of three years to issue this patent.

In addition, applicants dispute the period of reduction of 40 days for applicant delay entered for the purported filing of an Information Disclosure Statement (IDS) on January 20, 2008.

To the extent that applicants request reconsideration of the patent term adjustment as it relates to the Office's failure to issue the patent within 3 years of the filing date, the application for patent term adjustment under 37 CFR 1.705(b) is **DISMISSED as PREMATURE**.

Knowledge of the actual date the patent issues is required to calculate the amount, if any, of additional patent term patentees are entitled to for Office failure to issue the patent within 3 years. See § 1.702(b). The computer will not undertake the § 1.702(b) calculation until the actual date of issuance of the patent has been determined. Likewise, the computer will not calculate any further Office delay under § 1.702(a)(4) or applicant delay under § 1.704(c)(10) until the actual date of issuance of the patent has been determined. As such, the Office cannot make a determination on the correctness of the patent term adjustment until the patent has issued.

Requesting reconsideration of the patent term adjustment to be indicated on the patent under 37 CFR 1.705(b) based on the initial determination of patent term adjustment and a projected issuance date of the patent is premature. Accordingly, it is appropriate to dismiss as premature such a request.

Rather than file an application for patent term adjustment under 37 CFR 1.705(b) contesting the 37 CFR 1.702(b) calculation at the time of the mailing of the notice of allowance, applicants are advised that they may wait until the time of the issuance of the patent and file a request for reconsideration of the patent term adjustment pursuant to 37 CFR 1.705(d). As the USPTO does not calculate the amount of time earned pursuant to 37 CFR 1.702(b) until the time of the issuance of the patent, the Office will consider any request for reconsideration of the patent term adjustment due to an error in the calculation of 37 CFR 1.702(b) to be timely if the request for reconsideration is filed within two months of the issuance of the patent. However, as to all other bases for contesting the initial determination of patent term adjustment received with the notice of allowance, applicants must timely file an application for patent term adjustment prior to the payment of the issue fee[1].

To the extent that applicants otherwise request correction of the initial determination of patent term adjustment (PTA), the application for patent term adjustment is **GRANTED**.

The Office has updated the PALM screen to reflect that the correct Patent Term Adjustment determination at the time of the mailing of the Notice of Allowance is one hundred eighty-two (182) days. A copy of the updated PALM screen, showing the determination, is enclosed.

On June 24, 2009, the Office mailed the Determination of Patent Term Adjustment under 35 U.S.C. 154(b) in the above-identified application. The Notice stated that the patent term adjustment

---

[1] For example, if applicant disputes both the calculation of patent term adjustment under 37 CFR 1.702(a)(1) for Office failure to mail a first Office action or notice of allowance not later than fourteen months after the date on which the application was filed and under 37 CFR 1.702(b) for Office failure to issue a patent within three years of the actual filing date of the application, then applicant must still timely file an application for patent term adjustment prior to the payment of the issue fee to contest the calculation of Office delay in issuing a first Office action or notice of allowance. See 37 CFR 1.705(b) and 35 U.S.C. 154(b)(3)(B). A dispute as to the calculation of the §1.702(a)(1) period raised on request for reconsideration of patent term adjustment under 37 CFR 1.705(d) will be dismissed as untimely filed.

to date is 169 days. Applicants dispute the reduction of 40 days associated with the purported filing of an Information Disclosure Statement (IDS) on January 20, 2008.

Applicants' argument with respect to the IDS purportedly filed on January 20, 2008 has been considered and found persuasive. A review of the image file wrapper of this application reveals that no correspondence was filed on January 20, 2008. As such, entry of a period of reduction of 40 days is not warranted and will be removed.

However a review of the PTA calculations for the application reveals another basis for reduction. After applicants filed a reply on December 11, 2007 to a restriction requirement, applicants submitted a supplemental reply or paper in the form of an Information Disclosure Statement (IDS) on January 7, 2008. The record does not support a conclusion that the examiner expressly requested the filing of the IDS. Further, a review of the IDS, filed January 7, 2008, reveals that applicants did not include a statement under 37 CFR 1.704(d).[2] Thus, applicants failed to engage in reasonable efforts to conclude prosecution of the application. The period of adjustment should have been reduced by 27 days pursuant to 37 CFR 1.704(c)(8), counting the number of days beginning on the day after the date the initial reply was filed, December 12, 2007, and ending on the date that the IDS was filed, January 7, 2008. Accordingly, a period of reduction of 27 days will be entered.

In view thereof, the correct patent term adjustment at the time of mailing of the notice of allowance is **182 days** (379 days of Office delay - 197 days of applicant delay).

---

[2] Pursuant to 37 CFR § 1.704(d):

> A paper containing only an information disclosure statement in compliance with §§ 1.97 and 1.98 will not be considered a failure to engage in reasonable efforts to conclude prosecution (processing or examination) of the application under paragraphs (c)(6), (c)(8), (c)(9), or (c)(10) of this section if it is accompanied by a statement that each item of information contained in the information disclosure statement was first cited in any communication from a foreign patent office in a counterpart application and that this communication was not received by any individual designated in § 1.56(c) more than thirty days prior to the filing of the information disclosure statement. This thirty-day period is not extendable.

The Office acknowledges receipt of the $200.00 fee set forth in 37 CFR 1.18(e) for consideration of the application for patent term adjustment under 37 CFR 1.705(b).

Any request for reconsideration of the patent term adjustment indicated on the patent must be timely filed within 2 months after issuance pursuant to 37 CFR 1.705(d) and must include payment of the required fee under 37 CFR 1.18(e).

The Office of Data Management has been advised of this decision. This application is being referred to the Office of Data Management for issuance of the patent.

Telephone inquiries specific to this decision should be directed to Senior Petitions Attorney Shirene Willis Brantley at (571) 272-3230.

Nancy Johnson
Senior Petitions Attorney
Office of Petitions

Enclosure: Copy of adjusted PALM calculation

Day : Friday
Date: 2/26/2010

PALM INTRANET

Time: 17:13:27

PTA Calculations for Application: 11/144222			
Application Filing Date:	06/02/2005	PTO Delay (PTO):	379
Issue Date of Patent:		Three Years:	0
Pre-Issue Petitions:	0	Applicant Delay (APPL):	210
Post-Issue Petitions:	0	Total PTA (days):	182
PTO Delay Adjustment:	13		

File Contents History

Number	Date	Contents Description	PTO	APPL	START
127	02/26/2010	ADJUSTMENT OF PTA CALCULATION BY PTO		27	
126	02/26/2010	ADJUSTMENT OF PTA CALCULATION BY PTO	40		
95	06/24/2009	MAIL NOTICE OF ALLOWANCE			
94	06/22/2009	ISSUE REVISION COMPLETED			
93	06/22/2009	DOCUMENT VERIFICATION			
92	06/22/2009	NOTICE OF ALLOWANCE DATA VERIFICATION COMPLETED			
91	06/22/2009	CASE DOCKETED TO EXAMINER IN GAU			
90	06/19/2009	EXAMINER'S AMENDMENT COMMUNICATION			
89	06/19/2009	NOTICE OF ALLOWABILITY			
88	06/09/2009	EXAMINER INTERVIEW SUMMARY RECORD (PTOL - 413)			
87	05/26/2009	INFORMATION DISCLOSURE STATEMENT CONSIDERED			
86	05/26/2009	REFERENCE CAPTURE ON IDS			
85	05/26/2009	INFORMATION DISCLOSURE STATEMENT (IDS) FILED			
84	06/01/2009	DATE FORWARDED TO EXAMINER			
83	05/26/2009	AMENDMENT/ARGUMENT AFTER NOTICE OF APPEAL			
82	05/26/2009	NOTICE OF APPEAL FILED			
81	05/26/2009	INFORMATION DISCLOSURE STATEMENT (IDS) FILED			
80	05/07/2009	MAIL EXAMINER INTERVIEW SUMMARY (PTOL - 413)			
79	05/04/2009	EXAMINER INTERVIEW SUMMARY RECORD (PTOL - 413)			
77	03/02/2009	MAIL FINAL REJECTION (PTOL - 326)			

76	01/28/2009	INFORMATION DISCLOSURE STATEMENT (IDS) FILED		79	61
75	01/20/2009	REFERENCE CAPTURE ON IDS			
74	01/20/2008	INFORMATION DISCLOSURE STATEMENT (IDS) FILED		40	32
73	06/25/2008	REFERENCE CAPTURE ON IDS			
72	06/25/2008	INFORMATION DISCLOSURE STATEMENT (IDS) FILED		64	42
71	02/17/2009	FINAL REJECTION			
70	01/28/2009	INFORMATION DISCLOSURE STATEMENT CONSIDERED			
69	01/20/2009	INFORMATION DISCLOSURE STATEMENT CONSIDERED			
68	01/20/2009	INFORMATION DISCLOSURE STATEMENT (IDS) FILED			
67	01/28/2009	INFORMATION DISCLOSURE STATEMENT (IDS) FILED			
62	12/11/2008	DATE FORWARDED TO EXAMINER			
61	11/10/2008	RESPONSE AFTER NON-FINAL ACTION		2	59
60	11/10/2008	NEW OR ADDITIONAL DRAWING FILED			
59	08/08/2008	MAIL NON-FINAL REJECTION			
58	08/04/2008	NON-FINAL REJECTION			
56	08/29/2005	INFORMATION DISCLOSURE STATEMENT CONSIDERED			
55	09/19/2005	INFORMATION DISCLOSURE STATEMENT CONSIDERED			
54	05/04/2007	INFORMATION DISCLOSURE STATEMENT CONSIDERED			
53	05/30/2007	INFORMATION DISCLOSURE STATEMENT CONSIDERED			
52	09/19/2007	INFORMATION DISCLOSURE STATEMENT CONSIDERED			
51	01/07/2008	INFORMATION DISCLOSURE STATEMENT CONSIDERED			
50	06/25/2008	INFORMATION DISCLOSURE STATEMENT CONSIDERED			
45	06/25/2008	INFORMATION DISCLOSURE STATEMENT (IDS) FILED			
43	05/31/2008	DATE FORWARDED TO EXAMINER			
42	04/22/2008	RESPONSE TO ELECTION / RESTRICTION FILED			
41	04/22/2008	REQUEST FOR EXTENSION OF TIME - GRANTED			

40	04/22/2008	CASE DOCKETED TO EXAMINER IN GAU			
39	03/19/2008	MAIL RESTRICTION REQUIREMENT			
38	03/17/2008	REQUIREMENT FOR RESTRICTION / ELECTION			
35	01/07/2008	INFORMATION DISCLOSURE STATEMENT (IDS) FILED			
34	01/07/2008	INFORMATION DISCLOSURE STATEMENT (IDS) FILED			
33	01/02/2008	DATE FORWARDED TO EXAMINER			
32	12/11/2007	RESPONSE TO ELECTION / RESTRICTION FILED		25	29
31	12/03/2007	MAIL NOTICE OF INFORMAL OR NON-RESPONSIVE AMENDMENT			
30	11/30/2007	DATE FORWARDED TO EXAMINER			
29.1	11/16/2007	INFORMAL OR NON-RESPONSIVE AMENDMENT AFTER EXAMINER ACTION			
29	11/16/2007	RESPONSE TO ELECTION / RESTRICTION FILED			
28	11/16/2007	REQUEST FOR EXTENSION OF TIME - GRANTED			
27	09/19/2007	INFORMATION DISCLOSURE STATEMENT (IDS) FILED			
26	09/19/2007	INFORMATION DISCLOSURE STATEMENT (IDS) FILED			
25	08/16/2007	MAIL RESTRICTION REQUIREMENT	379		-1
24	08/15/2007	REQUIREMENT FOR RESTRICTION / ELECTION			
23	05/30/2007	INFORMATION DISCLOSURE STATEMENT (IDS) FILED			
22	05/30/2007	INFORMATION DISCLOSURE STATEMENT (IDS) FILED			
20	05/04/2007	INFORMATION DISCLOSURE STATEMENT (IDS) FILED			
19	09/19/2005	REFERENCE CAPTURE ON IDS			
18.7	09/19/2005	INFORMATION DISCLOSURE STATEMENT (IDS) FILED			
18	09/19/2005	INFORMATION DISCLOSURE STATEMENT (IDS) FILED			
17	09/14/2005	IFW TSS PROCESSING BY TECH CENTER COMPLETE			
16	09/14/2005	CASE DOCKETED TO EXAMINER IN GAU			
15	08/29/2005	REFERENCE CAPTURE ON IDS			
14.7	08/29/2005	INFORMATION DISCLOSURE STATEMENT (IDS) FILED			

14	08/29/2005	INFORMATION DISCLOSURE STATEMENT (IDS) FILED			
13	06/02/2005	PRELIMINARY AMENDMENT			
12	09/12/2005	APPLICATION RETURN FROM OIPE			
11	09/12/2005	APPLICATION IS NOW COMPLETE			
10	09/12/2005	APPLICATION RETURN TO OIPE			
9	09/12/2005	APPLICATION DISPATCHED FROM OIPE			
8	09/12/2005	APPLICATION IS NOW COMPLETE			
7	09/06/2005	CRF IS GOOD TECHNICALLY / ENTERED INTO DATABASE			
6	06/02/2005	CRF DISK HAS BEEN RECEIVED BY PREEXAM / GROUP / PCT			
5	07/05/2005	CLEARED BY L&R (LARS)			
4	06/15/2005	REFERRED TO LEVEL 2 (LARS) BY OIPE CSR			
3	06/15/2005	CASE CLASSIFIED BY OIPE			
2	06/14/2005	IFW SCAN & PACR AUTO SECURITY REVIEW			
1	06/02/2005	INITIAL EXAM TEAM NN			

Search Another: Application# Search

EXPLANATION OF PTA CALCULATION

EXPLANATION OF PTE CALCULATION

To go back, right click here and select Back. To go forward, right click here and select Forward. To refresh, right click here and select Refresh.

Back to OASIS | Home page

UNITED STATES PATENT AND TRADEMARK OFFICE

Commissioner for Patents
United States Patent and Trademark Office
P.O. Box 1450
Alexandria, VA 22313-1450
www.uspto.gov

MORGAN, LEWIS & BOCKIUS LLP (SF)
One Market, Spear Street Tower, Suite 2800
San Francisco, CA 94105

MAILED

OCT 23 2009

OFFICE OF PETITIONS

In re Application of DeFrees et al. :
Application No. 11/144,223 :
Filing Date: June 2, 2005 :
Attorney Docket No. 101961-01-5142US01 :

Decision Dismissing Petitions
Under 37 CFR 1.78(a)(3) and (a)(6)

This is a decision on the petition under 37 CFR §§ 1.78(a)(3) and 1.78(a)(6), filed May 11, 2009, to accept an unintentionally delayed claim under 35 U.S.C. §§ 120 and 119(e) for the benefit of priority to the prior-filed nonprovisional and provisional applications set forth in the concurrently filed amendment.

The petition is **DISMISSED**.

A petition for acceptance of a claim for late priority under 37 CFR §§ 1.78(a)(3) and 1.78(a)(6) is only applicable to those applications filed on or after November 29, 2000 and after the expiration of the period specified in 37 CFR §§ 1.78(a)(2)(ii) and 1.78(a)(5)(ii). In addition, the petition under 37 CFR §§ 1.78(a)(3) and 1.78(a)(6) must be accompanied by:

(1) the reference required by 35 U.S.C. §§ 120 and 119(e) and 37 CFR §§ 1.78(a)(2)(i) and 1.78(a)(5)(i) of the prior-filed application, unless previously submitted;
(2) the surcharge set forth in § 1.17(t); and
(3) a statement that the entire delay between the date the claim was due under 37 CFR §§ 1.78(a)(2)(ii) and 1.78(a)(5)(ii) and the date the claim was filed was unintentional. The Director may require additional where there is a question whether the delay was unintentional.

The petition does not comply with item (1).

The Supplemental Application Data Sheet

Petitioner has filed a Supplemental Application Data Sheet ("Supplemental ADS"). Although priority claims may be set forth in a Supplemental ADS, the Supplemental ADS filed May 11, 2009, cannot be accepted.

The Supplemental ADS indicates the instant application *and* Application No. 10/997,405 claim priority to Application No. 60/685,007. Application No. 10/997,405 was filed November 24, 2004, *prior to* May 25, 2005, the filing date of Application No. 60/685,007. Therefore, the Supplemental ADS cannot be accepted at this time.

The Amendment to the Specification

The amendment to the specification does not indicate Application No. 10/997,405 is claiming priority based on Application No. 60/685,007. However, the amendment cannot be accepted because the amendment improperly incorporates by reference prior-filed applications. An incorporation by reference statement added after an application's filing date is not effective because no new matter can be added to an application after its filing date (*see* 35 U.S.C. § 132(a)). If an incorporation by reference statement is included in an amendment to the specification to add a benefit claim under 35 U.S.C. § 120 after the filing date of the application, the amendment would not be proper. When a benefit claim under 35 U.S.C. § 120 is submitted after the filing of an application, the reference to the prior application cannot include an incorporation by reference statement of the prior application. *See Dart Industries v. Banner*, 636 F.2d 684, 207 U.S.P.Q. (BNA) 273 (C.A.D.C. 1980). *Note* MPEP §§ 201.06(c) and 608.04(b).

Conclusion

Before the petition under 37 CFR §§ 1.78(a)(3) and 1.78(a)(6) can be granted, a renewed petition and either a new Supplemental Application Data Sheet or a proper substitute amendment (complying with the provisions of 37 CFR 1.121 and 37 CFR 1.76(b)(5)) to correct the above matters is required.

The Office strongly suggests any request for reconsideration include a Supplemental ADS *and* a new amendment. By including both documents with any request for reconsideration, petitioner can minimize the risk of an error in the priority claims appearing on the face of any patent that issues based on the instant application.

Further correspondence with respect to this matter should be addressed as follows:

By mail: Mail Stop PETITIONS
Commissioner for Patents
Post Office Box 1450
Alexandria, VA 22313-1450

By hand: Customer Service Window
Mail Stop Petitions
Randolph Building
401 Dulany Street
Alexandria, VA 22314

By fax: (571) 273-8300
ATTN: Office of Petitions

Any questions concerning this matter may be directed to Steven Brantley at (571) 272-3203.

Charles Steven Brantley
Senior Petitions Attorney
Office of Petitions

UNITED STATES PATENT AND TRADEMARK OFFICE

Commissioner for Patents
United States Patent and Trademark Office
P.O. Box 1450
Alexandria, VA 22313-1450
www.uspto.gov

MAILED

MAY 1 1 2010

OFFICE OF PETITIONS

LEYDIG VOIT & MAYER, LTD
TWO PRUDENTIAL PLAZA, SUITE 4900
180 NORTH STETSON AVENUE
CHICAGO IL 60601-6731

In re Application of	:	Decision Granting Petition Under
DeFrees et al.	:	Under 37 CFR 1.78(a)(6) and
Application No. 11/144,223	:	Notice in Response to Submission
Filing Date: June 2, 2005	:	Under 37 CFR 1.28(c)
Attorney Docket No. 101961-01-5142US01	:	

This is a decision on the petition under 37 CFR 1.78(a)(6) filed November 10, 2009, to accept an unintentionally delayed claim under 35 U.S.C. § 119(e) for the benefit of the prior-filed provisional applications set forth in the concurrently filed amendment and supplemental application data sheet. This is also a notice regarding the request for acceptance of the fee deficiency submission under 37 CFR 1.28(c) filed September 11, 2009.

The petition under 37 CFR 1.78(a)(6) is **granted**.

The fee deficiency is **accepted**.

The Petition Under 37 CFR 1.78(a)(6)

A petition under 37 CFR 1.78(a)(6) is only applicable to those applications filed on or after November 29, 2000. Further, the petition is appropriate only after expiration of the period specified in 37 CFR 1.78(a)(5)(ii) and must be filed during the pendency of the nonprovisional application. In addition, the petition must be accompanied by:

(1) the reference required by 35 U.S.C. § 119(e) and 37 CFR 1.78(a)(5)(i) to the prior-filed application, unless previously submitted;
(2) the surcharge set forth in § 1.17(t); and
(3) a statement that the entire delay between the date the claim was due under 37 CFR 1.78(a)(5)(ii) and the date the claim was filed was unintentional. The Director may require additional information where there is a question whether the delay was unintentional.

Additionally, the instant nonprovisional application must be pending at the time of filing of the reference to the prior-filed provisional application as required by 37 CFR 1.78(a)(5)(ii). Further, the nonprovisional application claiming the benefit of the prior-filed provisional application must have been filed within twelve months of the filing date of the prior-filed provisional application.

All of the prior requirements have been satisfied and the late claim for priority under 35 U.S.C. § 119(e) is accepted as being unintentionally delayed.

The granting of the petition to accept the delayed benefit claim to the prior-filed applications under 37 CFR 1.78(a)(6) should not be construed as meaning that this application is entitled to the benefit of the filing date of the prior-filed applications. In order for this application to be entitled to the benefit of the prior-filed applications, all other requirements under 35 U.S.C. § 119(e) and 37 CFR 1.78(a)(4) and (a)(5) must be met. Similarly, the fact that the corrected Filing Receipt accompanying this decision on petition includes the prior-filed applications should not be construed as meaning that applicant is entitled to the claim for benefit of priority to the prior-filed applications noted thereon. Accordingly, the examiner will, in due course, consider this benefit claim and determine whether the application is entitled to the benefit of the earlier filing dates.

A corrected Filing Receipt, which includes the priority claim to the prior-filed provisional applications, accompanies this decision on petition.

The Submission Under 37 CFR 1.28(c)

The deficiency payment of $3,497 is hereby accepted.

As authorized in the September 11, 2009 letter, the fee of $3,497 has been charged to Deposit Account no. 50-0310.

The change of status to large entity has been entered and made of record.

The application is being forwarded to Technology Center Art Unit 1654 for consideration by the examiner of the claim under 35 U.S.C. § 119(e) for the benefit of priority to the prior-filed provisional applications.

Any inquiries concerning this decision may be directed to Senior Petitions Attorney Steven Brantley at (571) 272-3203. All other inquiries concerning either the examination procedures or status of the application should be directed to the Technology Center.

Charles Steven Brantley
Senior Petitions Attorney
Office of Petitions

ATTACHMENT: Corrected Filing Receipt

UNITED STATES PATENT AND TRADEMARK OFFICE

UNITED STATES DEPARTMENT OF COMMERCE
United States Patent and Trademark Office
Address: COMMISSIONER FOR PATENTS
P.O. Box 1450
Alexandria, Virginia 22313-1450
www.uspto.gov

APPLICATION NUMBER	FILING or 371(c) DATE	GRP ART UNIT	FIL FEE REC'D	ATTY.DOCKET.NO	TOT CLAIMS	IND CLAIMS
11/144,223	06/02/2005	1654	2480	705710	46	3

CONFIRMATION NO. 2761

CORRECTED FILING RECEIPT

23460
LEYDIG VOIT & MAYER, LTD
TWO PRUDENTIAL PLAZA, SUITE 4900
180 NORTH STETSON AVENUE
CHICAGO, IL 60601-6731

OC000000041539182

Date Mailed: 05/10/2010

Receipt is acknowledged of this non-provisional patent application. The application will be taken up for examination in due course. Applicant will be notified as to the results of the examination. Any correspondence concerning the application must include the following identification information: the U.S. APPLICATION NUMBER, FILING DATE, NAME OF APPLICANT, and TITLE OF INVENTION. Fees transmitted by check or draft are subject to collection. Please verify the accuracy of the data presented on this receipt. **If an error is noted on this Filing Receipt, please submit a written request for a Filing Receipt Correction. Please provide a copy of this Filing Receipt with the changes noted thereon. If you received a "Notice to File Missing Parts" for this application, please submit any corrections to this Filing Receipt with your reply to the Notice. When the USPTO processes the reply to the Notice, the USPTO will generate another Filing Receipt incorporating the requested corrections**

Applicant(s)

Shawn DeFrees, North Wales, PA;
Robert J. Bayer, San Diego, CA;
David A. Zopf, Wayne, PA;

Assignment For Published Patent Application

Neose Technologies, Inc., Horsham, PA

Power of Attorney: The patent practitioners associated with Customer Number 23460

Domestic Priority data as claimed by applicant

This appln claims benefit of 60/685,007 05/25/2005
and is a CIP of 10/997,405 11/24/2004 PAT 7,405,198
which claims benefit of 60/524,989 11/24/2003
and claims benefit of 60/539,387 01/26/2004
and claims benefit of 60/555,504 03/22/2004
and claims benefit of 60/590,573 07/23/2004
and claims benefit of 60/592,744 07/29/2004
and claims benefit of 60/614,518 09/29/2004
and claims benefit of 60/623,387 10/29/2004

Foreign Applications

UNITED STATES OF AMERICA PCT/US04/39712 11/24/2004

If Required, Foreign Filing License Granted: 07/08/2005

The country code and number of your priority application, to be used for filing abroad under the Paris Convention, is **US 11/144,223**

Projected Publication Date: Not Applicable

Non-Publication Request: No

Early Publication Request: No
**** SMALL ENTITY ****
Title

Glycopegylated erythropoietin

Preliminary Class

514

PROTECTING YOUR INVENTION OUTSIDE THE UNITED STATES

Since the rights granted by a U.S. patent extend only throughout the territory of the United States and have no effect in a foreign country, an inventor who wishes patent protection in another country must apply for a patent in a specific country or in regional patent offices. Applicants may wish to consider the filing of an international application under the Patent Cooperation Treaty (PCT). An international (PCT) application generally has the same effect as a regular national patent application in each PCT-member country. The PCT process **simplifies** the filing of patent applications on the same invention in member countries, but **does not result** in a grant of "an international patent" and does not eliminate the need of applicants to file additional documents and fees in countries where patent protection is desired.

Almost every country has its own patent law, and a person desiring a patent in a particular country must make an application for patent in that country in accordance with its particular laws. Since the laws of many countries differ in various respects from the patent law of the United States, applicants are advised to seek guidance from specific foreign countries to ensure that patent rights are not lost prematurely.

Applicants also are advised that in the case of inventions made in the United States, the Director of the USPTO must issue a license before applicants can apply for a patent in a foreign country. The filing of a U.S. patent application serves as a request for a foreign filing license. The application's filing receipt contains further information and guidance as to the status of applicant's license for foreign filing.

Applicants may wish to consult the USPTO booklet, "General Information Concerning Patents" (specifically, the section entitled "Treaties and Foreign Patents") for more information on timeframes and deadlines for filing foreign patent applications. The guide is available either by contacting the USPTO Contact Center at 800-786-9199, or it can be viewed on the USPTO website at http://www.uspto.gov/web/offices/pac/doc/general/index.html.

For information on preventing theft of your intellectual property (patents, trademarks and copyrights), you may wish to consult the U.S. Government website, http://www.stopfakes.gov. Part of a Department of Commerce initiative, this website includes self-help "toolkits" giving innovators guidance on how to protect intellectual property in specific countries such as China, Korea and Mexico. For questions regarding patent enforcement issues, applicants may call the U.S. Government hotline at 1-866-999-HALT (1-866-999-4158).

LICENSE FOR FOREIGN FILING UNDER

Title 35, United States Code, Section 184

Title 37, Code of Federal Regulations, 5.11 & 5.15

GRANTED

The applicant has been granted a license under 35 U.S.C. 184, if the phrase "IF REQUIRED, FOREIGN FILING LICENSE GRANTED" followed by a date appears on this form. Such licenses are issued in all applications where the conditions for issuance of a license have been met, regardless of whether or not a license may be required as set forth in 37 CFR 5.15. The scope and limitations of this license are set forth in 37 CFR 5.15(a) unless an earlier license has been issued under 37 CFR 5.15(b). The license is subject to revocation upon written notification. The date indicated is the effective date of the license, unless an earlier license of similar scope has been granted under 37 CFR 5.13 or 5.14.

This license is to be retained by the licensee and may be used at any time on or after the effective date thereof unless it is revoked. This license is automatically transferred to any related applications(s) filed under 37 CFR 1.53(d). This license is not retroactive.

The grant of a license does not in any way lessen the responsibility of a licensee for the security of the subject matter as imposed by any Government contract or the provisions of existing laws relating to espionage and the national security or the export of technical data. Licensees should apprise themselves of current regulations especially with respect to certain countries, of other agencies, particularly the Office of Defense Trade Controls, Department of State (with respect to Arms, Munitions and Implements of War (22 CFR 121-128)); the Bureau of Industry and Security, Department of Commerce (15 CFR parts 730-774); the Office of Foreign AssetsControl, Department of Treasury (31 CFR Parts 500+) and the Department of Energy.

NOT GRANTED

No license under 35 U.S.C. 184 has been granted at this time, if the phrase "IF REQUIRED, FOREIGN FILING LICENSE GRANTED" DOES NOT appear on this form. Applicant may still petition for a license under 37 CFR 5.12, if a license is desired before the expiration of 6 months from the filing date of the application. If 6 months has lapsed from the filing date of this application and the licensee has not received any indication of a secrecy order under 35 U.S.C. 181, the licensee may foreign file the application pursuant to 37 CFR 5.15(b).

SPE RESPONSE FOR CERTIFICATE OF CORRECTION

Paper No.: _____

DATE : 5-15-08

TO SPE OF : ART UNIT 2824

SUBJECT : Request for Certificate of Correction for Appl. No.: 11/144229 Patent No.: 7193927

Please respond to this request for a certificate of correction within 7 days.

Please review the requested changes/corrections as shown in the **COCIN** document(s) in the IFW application image. No new matter should be introduced, nor should the scope or meaning of the claims be changed.

Should Drawings / Cols. be approved

Please complete the response (see below) and forward the completed response to scanning using document code **COCX**.

Emma Young

Certificates of Correction Branch

703-308-9390 ext. 117

Thank You For Your Assistance

The request for issuing the above-identified correction(s) is hereby:

Note your decision on the appropriate box.

- ☐ **Approved** — All changes apply.
- ☐ **Approved in Part** — Specify below which changes do not apply.
- ☐ **Denied** — State the reasons for denial below.

Comments: _____

_____

_____

_____

_____

_____ SPE _____ Art Unit

UNITED STATES PATENT AND TRADEMARK OFFICE

Commissioner for Patents
United States Patent and Trademark Office
P.O. Box 1450
Alexandria, VA 22313-1450
www.uspto.gov

TOWNSEND AND TOWNSEND AND CREW, LLP
TWO EMBARCADERO CENTER
EIGHTH FLOOR
SAN FRANCISCO, CA 94111-3834

COPY MAILED

MAY 15 2009

OFFICE OF PETITIONS

In re Application of	:	DECISION ON PETITION
Liu et al.	:	TO WITHDRAW
Application No. 11/144,234	:	FROM RECORD
Filed: June 2, 2005	:	
Attorney Docket No. 600189-286	:	

This is a decision on the Request to Withdraw as attorney or agent of record under 37 C.F.R. § 1.36(b), filed October 24, 2005.

The request is **NOT APPROVED** because it is moot.

A review of the file record indicates that the power of attorney to practitioners associated with Townsend and Townsend and Crew, LLP, has been revoked by the assignee of the patent application on February 10, 2006. Accordingly, the request to withdraw under 37 C.F.R. § 1.36(b) is moot.

All future communications from the Office will continue to be directed to the below-listed address until otherwise notified by applicant.

Telephone inquires concerning this decision should be directed to the undersigned at 571-272-6059.

A. Kelley

Alicia Kelley
Petitions Examiner
Office of Petitions

cc: YAHOO! INC.
C/O OSTROW KAUFMAN & FRANKL LLP
THE CHRYSLER BUILDING
405 LEXINGTON AVENUE, 62ND FLOOR
NEW YORK, NY 10174

UNITED STATES PATENT AND TRADEMARK OFFICE

COMMISSIONER FOR PATENTS
UNITED STATES PATENT AND TRADEMARK OFFICE
P.O. BOX 1450
ALEXANDRIA, VA 22313-1450
www.uspto.gov

MAILED

JUL 2 0 2006

Technology Center 2100

SAWYER LAW GROUP LLP
P.O. Box 51418
Palo Alto, CA 94303

In re Application of:
Fred A. BOWER III, et al.
Application No. 11/144,246
Filed: June 2, 2005
For: DISTRIBUTED COMPUTING ENVIRONMENT WITH REMOTE DATA COLLECTION MANAGEMENT

DECISION ON PETITION
UNDER 37 CFR § 1.48(a)

This is a decision on the petition, filed on 09 February 2006, under 37 C.F.R. § 1.48(a).

The petition is **GRANTED**.

The application is being forward to Technology Center Support Staff to enter inventor Celia A. SCHREIBER in the PALM database and to mail a corrected filing receipt.

Vincent N. Trans
Special Program Examiner
Technology Center 2100
Computer Architecture, Software, and
Information Security
571-272-3613

UNITED STATES PATENT AND TRADEMARK OFFICE

UNITED STATES DEPARTMENT OF COMMERCE
United States Patent and Trademark Office
Address: COMMISSIONER FOR PATENTS
P.O. Box 1450
Alexandria, Virginia 22313-1450
www.uspto.gov

SPRINT COMMUNICATIONS COMPANY L.P.
6391 SPRINT PARKWAY
KSOPHT0101-Z2100
OVERLAND PARK, KS 66251-2100

Mail Date: 04/21/2010

Applicant	: Mohammed Ghouse Mohiuddin	: DECISION ON REQUEST FOR
Patent Number	: 7665135	: RECALCULATION of PATENT
Issue Date	: 02/16/2010	: TERM ADJUSTMENT IN VIEW
Appliction No	: 11/144,258	: OF WYETH AND NOTICE OF INTENT TO
Filed	: 06/03/2005	: ISSUE CERTIFICATE OF CORRECTION
		:

The Request for Recalculation is **GRANTED** to the extent indicated.

The patent term adjustment has been determined to be **1097** days. The USPTO will *sua sponte* issue a certificate of correction reflecting the amount of PTA days determined by the recalculation.

Prior to the issuance of the certificate of correction, the USPTO will afford patentee an opportunity to be heard and request reconsideration. Accordingly, patentee has **one month or thirty (30) days**, whichever is longer, to file a request for reconsideration of this patent term adjustment calculation. See 35 U.S.C. 154(b)(3)(B)(ii) and 37 CFR 1.322(a)(4). No extensions of time will be granted under 37 CFR 1.136.

Patentee should use document code PET.OP if electronically filing a request for reconsideration of this patent term adjustment calculation. The patentee must also include the information required by 37 CFR 1.705(b)(2) and the fee required by 37 CFR 1.18(e). If patentee does not file a timely request for reconsideration of this patent term adjustment calculation including the information required by 37 CFR 1.705(b)(2) and the fee required by 37 CFR 1.18(e), the USPTO will issue a certificate of correction reflecting the PTA determination noted above.

Patentee should be aware that in order to preserve the right to review in the United States District Court for the District of Columbia of the USPTO patent term adjustment determination, patentee must ensure that he or she also take the steps required under 35 U.S.C. 154(b)(4)(A) in a timely manner. Nothing in the request for recalculation should be construed as providing an alternative time frame for commencing a civil action under 35 U.S.C. 154(b)(4)(A).

Any questions concerning this decision should be directed to the Office of Patent Legal Administration at 571-272-7702.

UNITED STATES PATENT AND TRADEMARK OFFICE

UNITED STATES DEPARTMENT OF COMMERCE
United States Patent and Trademark Office
Address: COMMISSIONER FOR PATENTS
P.O. Box 1450
Alexandria, Virginia 22313-1450
www.uspto.gov

CARLSON, GASKEY & OLDS, P.C.
400 WEST MAPLE ROAD
SUITE 350
BIRMINGHAM, MI 48009

Mail Date: 06/10/2010

Applicant	: Andrew J. Wisniewski	: DECISION ON REQUEST FOR
Patent Number	: 7628948	: RECALCULATION of PATENT
Issue Date	: 12/08/2009	: TERM ADJUSTMENT IN VIEW
Application No	: 11/144,282	: OF WYETH AND NOTICE OF INTENT TO
Filed	: 06/03/2005	: ISSUE CERTIFICATE OF CORRECTION
		:

The Request for Recalculation is **GRANTED** to the extent indicated.

The patent term adjustment has been determined to be **1223** days. The USPTO will *sua sponte* issue a certificate of correction reflecting the amount of PTA days determined by the recalculation.

Prior to the issuance of the certificate of correction, the USPTO will afford patentee an opportunity to be heard and request reconsideration. Accordingly, patentee has **one month or thirty (30) days**, whichever is longer, to file a request for reconsideration of this patent term adjustment calculation. See 35 U.S.C. 154(b)(3)(B)(ii) and 37 CFR 1.322(a)(4). No extensions of time will be granted under 37 CFR 1.136.

Patentee should use document code PET.OP if electronically filing a request for reconsideration of this patent term adjustment calculation. The patentee must also include the information required by 37 CFR 1.705(b)(2) and the fee required by 37 CFR 1.18(e). If patentee does not file a timely request for reconsideration of this patent term adjustment calculation including the information required by 37 CFR 1.705(b)(2) and the fee required by 37 CFR 1.18(e), the USPTO will issue a certificate of correction reflecting the PTA determination noted above.

Patentee should be aware that in order to preserve the right to review in the United States District Court for the District of Columbia of the USPTO patent term adjustment determination, patentee must ensure that he or she also take the steps required under 35 U.S.C. 154(b)(4)(A) in a timely manner. Nothing in the request for recalculation should be construed as providing an alternative time frame for commencing a civil action under 35 U.S.C. 154(b)(4)(A).

Any questions concerning this decision should be directed to the Office of Patent Legal Administration at 571-272-7702.

UNITED STATES PATENT AND TRADEMARK OFFICE

UNITED STATES DEPARTMENT OF COMMERCE
United States Patent and Trademark Office
Address: COMMISSIONER FOR PATENTS
P.O. Box 1450
Alexandria, Virginia 22313-1450
www.uspto.gov

APPLICATION NO.	FILING DATE	FIRST NAMED INVENTOR	ATTORNEY DOCKET NO.	CONFIRMATION NO.
11/144,285	06/03/2005	Helmut Reichelt	NEU.00052	1857

7590 05/23/2008
MCNAIR LAW FIRM, P.A.
P.O. BOX 10827
GREENVILLE, SC 29603-0827

EXAMINER
BOLES, DEREK

ART UNIT	PAPER NUMBER
3749	

MAIL DATE	DELIVERY MODE
05/23/2008	PAPER

DECISION GRANTING PETITION UNDER 37 CFR 1.138(d)

The declaration of express abandonment is recognized

This is in response to the petition under 37 CFR 1.138(d), requesting for a refund of any previously paid search fee and excess claims fee in the above-identified application.

The petition is granted.

The express abandonment is recognized. Any previously paid search fee and excess claims fee are hereby refunded.

Telephone inquiries should be directed to the Office of Data Management at (571) 272-4200.

Nioni Farmer

Patent Publication Branch
Office of Data Management

Adjustment date: 05/28/2008 NFARMER
06/07/2005 STEUMEL1 00000084 502079 11144285
02 FC:1111 500.00 CR
04 FC:1202 200.00 CR

FORM PET651G (Rev. 08/07)

UNITED STATES PATENT AND TRADEMARK OFFICE

UNITED STATES DEPARTMENT OF COMMERCE
United States Patent and Trademark Office
Address: COMMISSIONER FOR PATENTS
P.O. Box 1450
Alexandria, Virginia 22313-1450
www.uspto.gov

INTERNATIONAL BUSINESS MACHINES CORPORATION
INTELLECTUAL PROPERTY LAW, DEPT. QPZA/ 210
8501 IBM DRIVE
CHARLOTTE, NC 28262

Mail Date: 04/21/2010

Applicant	: Michael A. Duncan	: DECISION ON REQUEST FOR
Patent Number	: 7658380	: RECALCULATION of PATENT
Issue Date	: 02/09/2010	: TERM ADJUSTMENT IN VIEW
Appliction No	: 11/144,312	: OF WYETH AND NOTICE OF INTENT TO
Filed	: 06/03/2005	: ISSUE CERTIFICATE OF CORRECTION
		:

The Request for Recalculation is **GRANTED** to the extent indicated.

The patent term adjustment has been determined to be **1286** days. The USPTO will *sua sponte* issue a certificate of correction reflecting the amount of PTA days determined by the recalculation.

Prior to the issuance of the certificate of correction, the USPTO will afford patentee an opportunity to be heard and request reconsideration. Accordingly, patentee has **one month or thirty (30) days**, whichever is longer, to file a request for reconsideration of this patent term adjustment calculation. See 35 U.S.C. 154(b)(3)(B)(ii) and 37 CFR 1.322(a)(4). No extensions of time will be granted under 37 CFR 1.136.

Patentee should use document code PET.OP if electronically filing a request for reconsideration of this patent term adjustment calculation. The patentee must also include the information required by 37 CFR 1.705(b)(2) and the fee required by 37 CFR 1.18(e). If patentee does not file a timely request for reconsideration of this patent term adjustment calculation including the information required by 37 CFR 1.705(b)(2) and the fee required by 37 CFR 1.18(e), the USPTO will issue a certificate of correction reflecting the PTA determination noted above.

Patentee should be aware that in order to preserve the right to review in the United States District Court for the District of Columbia of the USPTO patent term adjustment determination, patentee must ensure that he or she also take the steps required under 35 U.S.C. 154(b)(4)(A) in a timely manner. Nothing in the request for recalculation should be construed as providing an alternative time frame for commencing a civil action under 35 U.S.C. 154(b)(4)(A).

Any questions concerning this decision should be directed to the Office of Patent Legal Administration at 571-272-7702.

UNITED STATES PATENT AND TRADEMARK OFFICE

Commissioner for Patents
United States Patent and Trademark Office
P.O. Box 1450
Alexandria, VA 22313-1450
www.uspto.gov

THE PROCTER & GAMBLE COMPANY
INTELLECTUAL PROPERTY DIVISION - WEST BLDG.
WINTON HILL BUSINESS CENTER - BOX 412
6250 CENTER HILL AVENUE
CINCINNATI, OH 45224

COPY MAILED

JUL 07 2008

OFFICE OF PETITIONS

In re Application of	:	
Christine Marie CAHEN	:	
Application No. 11/144,313	:	DECISION ON PETITION
Filed: June 03, 2005	:	
Attorney Docket No. CM2874	:	

This is a decision on the petition under the unintentional provisions of 37 CFR 1.137(b), filed May 05, 2008, to revive the above-identified application.

The petition is **GRANTED**.

The application became abandoned for failure to reply in a timely manner to the non-final Office action mailed, November 02, 2007, which set a shortened statutory period for reply of three (3) months. No extensions of time under the provisions of 37 CFR 1.136(a) were obtained. Accordingly, the application became abandoned on February 5, 2008.

The petition satisfies the requirements of 37 CFR 1.137(b) in that petitioner has supplied (1) the reply in the form of an amendment; (2) the petition fee of $1540.00; and (3) a proper statement of unintentional delay. Accordingly, the reply to the non-final Office action of November 02, 2007 is accepted as having been unintentionally delayed.

An extension of time under 37 CFR 1.136 must be filed prior to the expiration of the maximum extendable period for reply. *See* In re Application of S., 8 USPQ2d 1630, 1631 (Comm'r Pats. 1988). Since the $1,050.00 extension of time fee submitted with the petition on May 05, 2008 was subsequent to the maximum extendable period for reply, this fee is unnecessary and will be credited to petitioner's deposit account.

Telephone inquiries concerning this decision should be directed to the undersigned at (571) 272- 4231.

The application file is being referred to Technology Center AU 1796 for appropriate action on the concurrently filed amendment.

Michelle R. Eason
Paralegal Specialist
Office of Petitions

UNITED STATES PATENT AND TRADEMARK OFFICE

Commissioner for Patents
United States Patent and Trademark Office
P.O. Box 1450
Alexandria, VA 22313-1450
www.uspto.gov

Paper No.

MERCK AND CO., INC
P O BOX 2000
RAHWAY NJ 07065-0907

MAILED

AUG 3 1 2009

OFFICE OF PETITIONS

In re Application of	:	
Parmee et al.	:	
Application No. 11/144,332	:	ON APPLICATION FOR
Filed: June 3, 2005	:	PATENT TERM ADJUSTMENT
Atty Docket No. 21679Y	:	

This is in response to the PETITION PURSUANT TO 37 C.F.R. §1.181 AND APPLICATION FOR RECONSIDERATION OF PATENT TERM ADJUSTMENT filed March 9, 2009, which is properly treated as an application for patent term adjustment under 37 CFR 1.705(b). Applicants submit that the patent term adjustment to be indicated on the patent is at least five hundred fifty-eight (558) days[1], not five hundred fifteen (515) days as calculated by the Office as of the mailing of the initial determination of patent term adjustment. Applicants request this correction on the basis that the Office will take in excess of three years to issue this patent.

In addition, applicants dispute the periods of reduction for applicant delay entered for the filing of Information Disclosure Statements on March 27, 2008 and October 27, 2008. (It is noted that the later IDS was actually filed on October 2, 2008).

To the extent that applicants request reconsideration of the patent term adjustment as it relates to the Office's failure to issue the patent within 3 years of the filing date, the application for patent term adjustment under 37 CFR 1.705(b) is DISMISSED as PREMATURE.

---

[1] Plus the full period of time calculated from the date that is three years after the filing date until the patent is granted, less any actual days of overlap (zero days) plus any additional time that is incurred, in effect, pursuant to 37 CFR 1.702(a)(4).

Knowledge of the actual date the patent issues is required to calculate the amount, if any, of additional patent term patentee is entitled to for Office failure to issue the patent within 3 years. See § 1.702(b). (This is true even where a request for continued examination (RCE) was filed). The computer will not undertake the § 1.702(b) calculation until the actual date of issuance of the patent has been determined. Likewise, the computer will not calculate any further Office delay under § 1.702(a)(4) or applicant delay under § 1.704(c)(10) until the actual date of issuance of the patent has been determined. As such, the Office cannot make a determination on the correctness of the patent term adjustment until the patent has issued.

Requesting reconsideration of the patent term adjustment to be indicated on the patent under 37 CFR 1.705(b) based on the initial determination of patent term adjustment and a projected issuance date of the patent (or even the filing date of the request for continued examination) is premature. Accordingly, it is appropriate to dismiss as premature such a request.

Rather than file an application for patent term adjustment under 37 CFR 1.705(b) contesting the 37 CFR 1.702(b) calculation at the time of the mailing of the notice of allowance, applicant is advised that they may wait until the time of the issuance of the patent and file a request for reconsideration of the patent term adjustment pursuant to 37 CFR 1.705(d). As the USPTO does not calculate the amount of time earned pursuant to 37 CFR 1.702(b) until the time of the issuance of the patent, the Office will consider any request for reconsideration of the patent term adjustment due to an error in the calculation of 37 CFR 1.702(b) to be timely if the request for reconsideration is filed within two months of the issuance of the patent. However, as to all other bases for contesting the initial determination of patent term adjustment received with the notice of allowance, applicant must timely file an application for patent term adjustment prior to the payment of the issue fee[2].

---

[2] For example, if applicant disputes both the calculation of patent term adjustment under 37 CFR 1.702(a)(1) for Office failure to mail a first Office action or notice of allowance not later than fourteen months after the date on which the application was filed and under 37 CFR 1.702(b) for Office failure to issue a patent within three years of the actual filing date of the application, then applicant must still timely file an application for patent term adjustment prior to the payment of the issue fee to contest the calculation of Office delay in issuing a first Office action or notice of allowance. See 37 CFR 1.705(b) and 35 U.S.C. 154(b)(3)(B). A dispute as to

To the extent that applicants otherwise request correction of the initial determination of patent term adjustment (PTA), the application for patent term adjustment is **GRANTED to the extent indicated herein.**

The Office has updated the PALM screen to reflect that the Patent Term Adjustment (PTA) determination at the time of the mailing of the Notice of Allowance is five hundred thirty-seven **(537)** days. A copy of the updated PALM screen, showing the determination, is enclosed.

On December 8, 2008, the Office mailed the Determination of Patent Term Adjustment under 35 U.S.C. 154(b) in the above-identified application. The Notice stated that the patent term adjustment to date is 515 days. However, applicants dispute the reductions of 21 and 22 days associated with the filing of Information Disclosure Statements (IDSs) on March 27, 2008 and October 27, 2008. Applicants argue that no actual delay occurred within the Patent Office in the examination or prosecution of the application due to these submissions. As such, applicants maintain that they did not fail to engage in reasonable efforts to conclude examination on the merits.

Applicants' argument has been considered, but not found wholly persuasive. 37 CFR 1.704 (c) provides that:

> Circumstances that constitute a failure of the applicant to engage in reasonable efforts to conclude processing or examination of an application also include the following circumstances, which will result in the following reduction of the period of adjustment set forth in § 1.703 to the extent that the periods are not overlapping:
>
> (8) Submission of a supplemental reply or other paper, other than a supplemental reply or other paper expressly requested by the examiner, after a reply has been filed, in which case the period of adjustment set forth in § 1.703 shall be reduced by the number of days, if any, beginning on the day after the date the initial reply was filed and ending on the date that the supplemental reply or other such paper was filed;

---

the calculation of the §1.702(a)(1) period raised on request for reconsideration of patent term adjustment under 37 CFR 1.705(d) will be dismissed as untimely filed.

However, 37 CFR 1.704(d) provides that:

> A paper containing only an information disclosure statement in compliance with §§ 1.97 and 1.98 will not be considered a failure to engage in reasonable efforts to conclude prosecution (processing or examination) of the application under paragraphs (c)(6), (c)(8), (c)(9), or (c)(10) of this section if it is accompanied by a statement that each item of information contained in the information disclosure statement was first cited in any communication from a foreign patent office in a counterpart application and that this communication was not received by any individual designated in § 1.56(c) more than thirty days prior to the filing of the information disclosure statement. This thirty-day period is not extendable.

In this instance, applicants filed responses to Office actions on March 6, 2008 and September 10, 2008. It is undisputed that after the filing of each of these responses on March 27, 2008 and October 2 (not 27), 2008, applicants filed Information Disclosure Statements. The IDSs were not expressly requested by the examiner. Moreover, a review of the record reveals that the IDS filed March 27, 2008 did not include a 1.704(d) statement; however, the IDS filed October 2, 2008. As such, the filing of the IDS on October 2, 2008 was not a failure to engage within the meaning of 37 CFR 1.704(c)(8). However, by their act in filing the IDS on March 27, 2008 under the circumstances filed, applicants failed to engage in reasonable efforts to conclude examination within the meaning of 37 CFR 1.704(c)(8). Accordingly, the period of reduction of 21 days for the IDS filed March 27, 2008 is being retained and the period of reduction of 22 days for the IDS filed October 2, 2008 is being removed.

In view thereof, the determination of patent term adjustment at the time of the mailing of the notice of allowance is five hundred thirty-seven (537) days.

The Office acknowledges submission of the $200.00 fee set forth in 37 CFR 1.18(e) for consideration of the application for patent term adjustment under 37 CFR 1.705(b).

Any request for reconsideration of the patent term adjustment indicated on the patent must be timely filed within 2 months

after issuance pursuant to 37 CFR 1.705(d) and must include payment of the required fee under 37 CFR 1.18(e).

The Office of Data Management has been advised of this decision. This application is being referred to the Office of Data Management for issuance of the patent.

Telephone inquiries specific to this decision should be directed to the undersigned at (571) 272-3219.

Nancy Johnson
Senior Petitions Attorney
Office of Petitions

Enclosure: Copy of REVISED PALM Screen

Day : Wednesday

PALM INTRANET

Date: 8/26/2009
Time: 13:31:28

PTA Calculations for Application: 11/144332			
Application Filing Date:	06/03/2005	PTO Delay (PTO):	558
Issue Date of Patent:		Three Years:	0
Pre-Issue Petitions:	0	Applicant Delay (APPL):	43
Post-Issue Petitions:	0	Total PTA (days):	537
PTO Delay Adjustment:	22		

File Contents History

Number	Date	Contents Description	PTO	APPL	START
63	08/26/2009	ADJUSTMENT OF PTA CALCULATION BY PTO	22		
52	12/08/2008	MAIL NOTICE OF ALLOWANCE			
51	12/05/2008	ISSUE REVISION COMPLETED			
50	12/05/2008	DOCUMENT VERIFICATION			
49	12/05/2008	NOTICE OF ALLOWANCE DATA VERIFICATION COMPLETED			
48	12/05/2008	CASE DOCKETED TO EXAMINER IN GAU			
47	12/04/2008	EXAMINER'S AMENDMENT COMMUNICATION			
46	12/04/2008	NOTICE OF ALLOWABILITY			
45	10/02/2008	INFORMATION DISCLOSURE STATEMENT CONSIDERED			
44	09/10/2008	INFORMATION DISCLOSURE STATEMENT CONSIDERED			
43	10/02/2008	REFERENCE CAPTURE ON IDS			
42	10/02/2008	INFORMATION DISCLOSURE STATEMENT (IDS) FILED		22	37
40	10/02/2008	INFORMATION DISCLOSURE STATEMENT (IDS) FILED			
39	09/10/2008	INFORMATION DISCLOSURE STATEMENT (IDS) FILED			
38	10/06/2008	DATE FORWARDED TO EXAMINER			
37	09/10/2008	RESPONSE AFTER NON-FINAL ACTION			
36	09/10/2008	INFORMATION DISCLOSURE STATEMENT (IDS) FILED			
35	06/11/2008	MAIL NON-FINAL REJECTION			
34	06/09/2008	NON-FINAL REJECTION			
31	03/27/2008	INFORMATION DISCLOSURE STATEMENT CONSIDERED			

30	03/06/2008	INFORMATION DISCLOSURE STATEMENT CONSIDERED			
29	11/30/2007	INFORMATION DISCLOSURE STATEMENT CONSIDERED			
28	09/19/2006	INFORMATION DISCLOSURE STATEMENT CONSIDERED			
27	03/27/2008	REFERENCE CAPTURE ON IDS			
26	03/27/2008	INFORMATION DISCLOSURE STATEMENT (IDS) FILED		21	22
25	03/06/2008	REFERENCE CAPTURE ON IDS			
24	03/06/2008	INFORMATION DISCLOSURE STATEMENT (IDS) FILED			
23	04/05/2008	DATE FORWARDED TO EXAMINER			
22	03/06/2008	RESPONSE TO ELECTION / RESTRICTION FILED			
21	03/27/2008	INFORMATION DISCLOSURE STATEMENT (IDS) FILED			
20	03/06/2008	INFORMATION DISCLOSURE STATEMENT (IDS) FILED			
19	11/30/2007	REFERENCE CAPTURE ON IDS			
18	11/30/2007	INFORMATION DISCLOSURE STATEMENT (IDS) FILED			
17	02/12/2008	MAIL RESTRICTION REQUIREMENT	558		-1
16	02/08/2008	REQUIREMENT FOR RESTRICTION / ELECTION			
15	11/30/2007	INFORMATION DISCLOSURE STATEMENT (IDS) FILED			
14	09/19/2006	REFERENCE CAPTURE ON IDS			
13.7	09/19/2006	INFORMATION DISCLOSURE STATEMENT (IDS) FILED			
13	09/19/2006	INFORMATION DISCLOSURE STATEMENT (IDS) FILED			
12	08/11/2005	IFW TSS PROCESSING BY TECH CENTER COMPLETE			
11	08/11/2005	CASE DOCKETED TO EXAMINER IN GAU			
10	07/11/2005	APPLICATION RETURN FROM OIPE			
9	07/12/2005	APPLICATION IS NOW COMPLETE			
8	07/11/2005	APPLICATION RETURN TO OIPE			
7	07/11/2005	APPLICATION DISPATCHED FROM OIPE			
6	07/11/2005	APPLICATION IS NOW COMPLETE			
5	07/06/2005	CLEARED BY L&R (LARS)			
4	06/15/2005	REFERRED TO LEVEL 2 (LARS) BY OIPE CSR			

3	06/15/2005	CASE CLASSIFIED BY OIPE			
2	06/14/2005	IFW SCAN & PACR AUTO SECURITY REVIEW			
1	06/03/2005	INITIAL EXAM TEAM NN			

Search Another: Application# Search

EXPLANATION OF PTA CALCULATION

EXPLANATION OF PTE CALCULATION

To go back, right click here and select Back. To go forward, right click here and select Forward. To refresh, right click here and select Refresh.

Back to OASIS | Home page

SPE RESPONSE FOR CERTIFICATE OF CORRECTION

Paper No.: _____

DATE : 12-*07-09

TO SPE OF : ART UNIT 1626

SUBJECT : Request for Certificate of Correction for Appl. No.: 11144332 Patent No.: 7598285

Please respond to this request for a certificate of correction within 7 days.

FOR IFW FILES:

Please review the requested changes/corrections as shown in the **COCIN** document(s) in the IFW application image. No new matter should be introduced, nor should the scope or meaning of the claims be changed.

Please complete the response (see below) and forward the completed response to scanning using document code **COCX**.

FOR PAPER FILES:

Please review the requested changes/corrections as shown in the attached certificate of correction. Please complete this form (see below) and forward it with the file to:

Certificates of Correction Branch (CofC)
Randolph Square – 9D10-A
Palm Location 7580

Angela Green 703-756-1541
Certificates of Correction Branch
703-756-1814

Thank You For Your Assistance

The request for issuing the above-identified correction(s) is hereby:
Note your decision on the appropriate box.

- ☒ **Approved** — **All** changes apply.
- ☐ **Approved in Part** — Specify below which changes **do not** apply.
- ☐ **Denied** — State the reasons for denial below.

Comments: _____

Joseph K McKane

JOSEPH K. McKANE
SUPERVISORY PATENT EXAMINER
TECHNOLOGY CENTER 1600

_____ SPE

1626 Art Unit

UNITED STATES PATENT AND TRADEMARK OFFICE

UNITED STATES DEPARTMENT OF COMMERCE
United States Patent and Trademark Office
Address: COMMISSIONER FOR PATENTS
P.O. Box 1450
Alexandria, Virginia 22313-1450
www.uspto.gov

REISING ETHINGTON P.C.
P O BOX 4390
TROY, MI 48099-4390

Mail Date: 04/21/2010

Applicant	: Peter P. Kuperus	: DECISION ON REQUEST FOR
Patent Number	: 7618241	: RECALCULATION of PATENT
Issue Date	: 11/17/2009	: TERM ADJUSTMENT IN VIEW
Appliction No	: 11/144,344	: OF WYETH AND NOTICE OF INTENT TO
Filed	: 06/03/2005	: ISSUE CERTIFICATE OF CORRECTION
		:

The Request for Recalculation is **GRANTED** to the extent indicated.

The patent term adjustment has been determined to be **1123** days. The USPTO will *sua sponte* issue a certificate of correction reflecting the amount of PTA days determined by the recalculation.

Prior to the issuance of the certificate of correction, the USPTO will afford patentee an opportunity to be heard and request reconsideration. Accordingly, patentee has **one month or thirty (30) days**, whichever is longer, to file a request for reconsideration of this patent term adjustment calculation. See 35 U.S.C. 154(b)(3)(B)(ii) and 37 CFR 1.322(a)(4). No extensions of time will be granted under 37 CFR 1.136.

Patentee should use document code PET.OP if electronically filing a request for reconsideration of this patent term adjustment calculation. The patentee must also include the information required by 37 CFR 1.705(b)(2) and the fee required by 37 CFR 1.18(e). If patentee does not file a timely request for reconsideration of this patent term adjustment calculation including the information required by 37 CFR 1.705(b)(2) and the fee required by 37 CFR 1.18(e), the USPTO will issue a certificate of correction reflecting the PTA determination noted above.

Patentee should be aware that in order to preserve the right to review in the United States District Court for the District of Columbia of the USPTO patent term adjustment determination, patentee must ensure that he or she also take the steps required under 35 U.S.C. 154(b)(4)(A) in a timely manner. Nothing in the request for recalculation should be construed as providing an alternative time frame for commencing a civil action under 35 U.S.C. 154(b)(4)(A).

Any questions concerning this decision should be directed to the Office of Patent Legal Administration at 571-272-7702.

UNITED STATES PATENT AND TRADEMARK OFFICE

UNITED STATES DEPARTMENT OF COMMERCE
United States Patent and Trademark Office
Address: COMMISSIONER FOR PATENTS
P.O. Box 1450
Alexandria, Virginia 22313-1450
www.uspto.gov

REISING ETHINGTON P.C.
P O BOX 4390
TROY, MI 48099-4390

Mail Date: 05/18/2010

Applicant : Peter P. Kuperus
Patent Number : 7618241
Issue Date : 11/17/2009
Application No : 11/144,344
Filed : 06/03/2005

: NOTICE CONCERNING IMPROPER
: CALCULATION OF PATENT TERM
: ADJUSTMENT BASED UPON USPTO
: IMPROPERLY MEASURING REDUCTION
: PERIOD UNDER 37 CFR 1.704(c)(10).

The United States Patent and Trademark Office (USPTO) discovered that in processing the recent recalculation decisions mailed in response to patentee's filed Request for Recalculation of Patent Term Adjustment in view of Wyeth, the USPTO improperly measured the reduction period for reductions under 37 CFR 1.704(c)(10). Pursuant to 37 CFR 1.704(c)(10), patentee's reduction begins on the date of filing the amendment under 37 CFR 1.312 ("1.312 amendment") or other related paper and ends on the date that the Office mails a response to the filing of the 1.312 amendment or other paper. It has been discovered that during the recalculation, the calculation failed to the limit the reduction to the mail date of the response to the 1.312 amendment or other paper. Accordingly, patentee's reductions were greater than warranted.

This notice **VACATES** the previous GRANTED request for recalculation and provides patentee with a revised GRANTED recalculation.

The patent term adjustment has been determined to be **1169** days. The USPTO will *sua sponte* issue a certificate of correction reflecting the amount of patent term adjustment (PTA) days determined by the recalculation.

Prior to the issuance of the certificate of correction, the USPTO will afford patentee an opportunity to be heard and request reconsideration. Accordingly, patentee has **one month or thirty (30) days** from the mail date of this notice, whichever is longer, to file a request for reconsideration of this PTA calculation. See 35 U.S.C. § 154(b)(3)(B)(ii) and 37 CFR 1.322(a)(4).

Patentee should use document code PET.OP if electronically filing a request for reconsideration of this PTA calculation. The patentee must also include the information required by 37 CFR 1.705(b)(2), and the fee required by 37 CFR 1.18(e). If patentee does not file a timely request for reconsideration of this PTA calculation, including the information required by 37 CFR 1.705(b)(2) and the fee required by 37 CFR 1.18(e), the USPTO will issue a certificate of correction reflecting the PTA determination noted above.

Patentee should be aware that in order to preserve the right of review of the USPTO's PTA determination in the United States District Court for the District of Columbia, patentee must ensure that the steps required under 35 U.S.C. § 154 (b)(4) are taken in a timely manner. Nothing in the request for recalculation should be construed as providing an alternative time frame for commencing a civil action under 35 U.S.C. § 154(b)(4).

UNITED STATES PATENT AND TRADEMARK OFFICE

Commissioner for Patents
United States Patent and Trademark Office
P.O. Box 1450
Alexandria, VA 22313-1450
www.uspto.gov

APPLE C/O MORRISON AND
FOERSTER ,LLP
LOS ANGELES
555 WEST FIFTH STREET SUITE 3500
LOS ANGELES CA 90013-1024

MAILED

MAR 2 9 2010

OFFICE OF PETITIONS

In re Application :
Krah, al. :
Application No. 11/144,345 : PATENT TERM ADJUSTMENT
Filed: June 3, 2005 :
Dkt. No.: 106842024300 :

This is in response to the "REQUEST FOR RECONSIDERATION OF PTO CALCULATION OF PATENT TERM ADJUSTMENT UNDER 35 U.S.C. §154(b)(3)(B)," filed January 26, 2010. This matter is being properly treated under 37 CFR 1.705(b) as an application for patent term adjustment. Applicants submit that the correct patent term adjustment to be indicated on the patent is 796 days, not 602 days as calculated by the Office as of the mailing of the initial determination of patent term adjustment. Applicant requests this correction on the basis that the Office will take in excess of three years to issue this patent.

Insofar as the instant application for patent term adjustment requests reconsideration of the patent term adjustment as it relates to the Office's failure to issue the patent within 3 years of the filing date, the application for patent term adjustment under 37 CFR 1.705(b) is DISMISSED as PREMATURE.

Knowledge of the actual date the patent issues is required to calculate the amount, if any, of additional patent term patentee is entitled to for Office failure to issue the patent within 3 years. See, § 1.702(b). (This is true even where a request for continued examination (RCE) was filed). The computer will not undertake the § 1.702(b) calculation until the actual date of issuance of the patent has been determined. Likewise, the computer will not calculate any further Office delay under § 1.702(a)(4) or applicant delay under § 1.704(c)(10) until the actual date of issuance of the patent has been determined. As such, the Office can not make a determination on the correctness of the patent term adjustment until the patent has issued.

Requesting reconsideration of the patent term adjustment to be indicated on the patent based on the initial determination of patent term adjustment and a projected issuance date of the patent (or even the filing date of the request for continued examination) is premature. Accordingly, it is appropriate to dismiss as premature such a request.

Applicant is advised that they may wait until the time of the issuance of the patent and file a request for reconsideration of the patent term adjustment pursuant to 37 CFR 1.705(d). As the

USPTO does not calculate the amount of time earned pursuant to 37 CFR 1.702(b) until the time of the issuance of the patent, the Office will consider any request for reconsideration of the patent term adjustment due to an error in the calculation of 37 CFR 1.702(b) to be timely if the request for reconsideration is filed within two months of the issuance of the patent. However, as to all other bases for contesting the initial determination of patent term adjustment received with the notice of allowance, applicant must timely file an application for patent term adjustment prior to the payment of the issue fee[1].

The receipt is acknowledged of the required patent term adjustment application fee under 37 CFR 1.705(b) of $200.00. See, 37 CFR 1.18(e).

However, any request for reconsideration of the patent term adjustment indicated on the patent must be timely filed within 2 months after issuance pursuant to 37 CFR 1.705(d) and **must** include payment of the required fee under 37 CFR 1.18(e).

The application file is being forwarded to the Office of Data Management for issuance of the patent. The patent term adjustment indicated on the patent (as shown on the Issue Notification mailed about three weeks prior to patent issuance) will include any additional adjustment accrued both for Office delay in issuing the patent more than four months after payment of the issue fee and satisfaction of all outstanding requirements, and for the Office taking in excess of three years to issue the patent (to the extent that the three-year period does not overlap with periods already accorded).

Telephone inquiries specific to this decision should be directed to the undersigned at (571) 272-3205.

/ALESIA M. BROWN/

Alesia M. Brown
Petitions Attorney
Office of Petitions

---

[1] For example, if applicant disputes both the calculation of patent term adjustment under 37 CFR 1.702(a)(1) for Office failure to mail a first Office action or notice of allowance not later than fourteen months after the date on which the application was filed and under 37 CFR 1.702(b) for Office failure to issue a patent within three years of the actual filing date of the application, then applicant must still timely file an application for patent term adjustment prior to the payment of the issue fee to contest the calculation of Office delay in issuing a first Office action or notice of allowance. See 37 CFR 1.705(b) and 35 U.S.C. 154(b)(3)(B). A dispute as to the calculation of the §1.702(a)(1) period raised on request for reconsideration of patent term adjustment under 37 CFR 1.705(d) will be dismissed as untimely filed.

UNITED STATES PATENT AND TRADEMARK OFFICE

Commissioner for Patents
United States Patent and Trademark Office
P.O. Box 1450
Alexandria, VA 22313-1450
www.uspto.gov

PAUL, HASTINGS, JANOFSKY & WALKER LLP
875 15TH STREET, NW
WASHINGTON, DC 20005

COPY MAILED

MAY 15 2009

OFFICE OF PETITIONS

In re Application of	:	
Kevin V. Martin	:	DECISION ON PETITION
Application No. 11/144,348	:	TO WITHDRAW
Filed: June 3, 2005	:	FROM RECORD
Attorney Docket No. 2358.0190001/RWE	:	

This is a decision on the Request to Withdraw as attorney or agent of record under 37 C.F.R. § 1.36(b), filed October 3, 2005.

The request is **NOT APPROVED** because it is moot.

A review of the file record indicates that the power of attorney to practitioners associated with Paul, Hastings, Janofsky & Walker LLP, has been revoked by the assignee of the patent application on January 5, 2006. Accordingly, the request to withdraw under 37 C.F.R. § 1.36(b) is moot.

All future communications from the Office will continue to be directed to the below-listed address until otherwise notified by applicant.

Telephone inquires concerning this decision should be directed to the undersigned at 571-272-6059.

A. Kelley

Alicia Kelley
Petitions Examiner
Office of Petitions

cc: ARNOLD & PORTER LLP
555 TWELFTH ST., N.W.
ATTN: IP DOCKETING DEPT.
WASHINGTON, DC 20004-1206

UNITED STATES PATENT AND TRADEMARK OFFICE

UNITED STATES DEPARTMENT OF COMMERCE
United States Patent and Trademark Office
Address: COMMISSIONER FOR PATENTS
P.O. Box 1450
Alexandria, Virginia 22313-1450
www.uspto.gov

Arnold & Porter LLP (23032)
555 Twelfth St., N.W.
Attn: IP Docketing Dept.
Washington, DC 20004-1206

Mail Date: 04/20/2010

Applicant	: Kevin V. Martin	: DECISION ON REQUEST FOR
Patent Number	: 7582758	: RECALCULATION of PATENT
Issue Date	: 09/01/2009	: TERM ADJUSTMENT IN VIEW
Appliction No	: 11/144,348	: OF WYETH AND NOTICE OF INTENT TO
Filed	: 06/03/2005	: ISSUE CERTIFICATE OF CORRECTION
		:

The Request for Recalculation is **GRANTED** to the extent indicated.

The patent term adjustment has been determined to be **982** days. The USPTO will *sua sponte* issue a certificate of correction reflecting the amount of PTA days determined by the recalculation.

Prior to the issuance of the certificate of correction, the USPTO will afford patentee an opportunity to be heard and request reconsideration. Accordingly, patentee has **one month or thirty (30) days**, whichever is longer, to file a request for reconsideration of this patent term adjustment calculation. See 35 U.S.C. 154(b)(3)(B)(ii) and 37 CFR 1.322(a)(4). No extensions of time will be granted under 37 CFR 1.136.

Patentee should use document code PET.OP if electronically filing a request for reconsideration of this patent term adjustment calculation. The patentee must also include the information required by 37 CFR 1.705(b)(2) and the fee required by 37 CFR 1.18(e). If patentee does not file a timely request for reconsideration of this patent term adjustment calculation including the information required by 37 CFR 1.705(b)(2) and the fee required by 37 CFR 1.18(e), the USPTO will issue a certificate of correction reflecting the PTA determination noted above.

Patentee should be aware that in order to preserve the right to review in the United States District Court for the District of Columbia of the USPTO patent term adjustment determination, patentee must ensure that he or she also take the steps required under 35 U.S.C. 154(b)(4)(A) in a timely manner. Nothing in the request for recalculation should be construed as providing an alternative time frame for commencing a civil action under 35 U.S.C. 154(b)(4)(A).

Any questions concerning this decision should be directed to the Office of Patent Legal Administration at 571-272-7702.

UNITED STATES PATENT AND TRADEMARK OFFICE

COMMISSIONER FOR PATENTS
UNITED STATES PATENT AND TRADEMARK OFFICE
P.O. BOX 1450
ALEXANDRIA, VA 22313-1450
www.uspto.gov

Paper No.

DAIMLERCHRYSLER INTELLECTUAL
CAPITAL CORPORATION
CIMS 483-02-19
800 CHRYSLER DR EAST
AUBURN HILLS, MI 48326-2757

COPY MAILED

DEC 0 2 2005

OFFICE OF PETITIONS

In re Application of	:	
Sean Bannon	:	
Application No. 11/144,350	:	DECISION ON PETITION
Filed: June 3, 2005	:	
Atty Docket No. 706289US2	:	

This is a decision on "PETITION IN RESPONSE TO NOTICE OF OMITTED ITEMS," filed August 31, 2005, requesting that the above-identified application be accorded a filing date of June 3, 2005.

Application papers in the above-identified application were filed on June 3, 2005. However, on July 1, 2005, the Initial Patent Examination Division mailed applicant a "Notice of Omitted Item(s) in a Nonprovisional Application." Applicant was notified that the application papers had been accorded a filing date of June 3, 2005; however, page 16 of the specification appeared to have been omitted.

In reply, applicant timely filed the instant petition, asserting that the item referenced therein as being omitted, i.e., Page 16 of the specification, was in fact included with the original patent application deposited in the U.S. Patent and Trademark Office on June 3, 2005. Applicant states that due to a clerical error, the settings of the automatic page numbering for this application caused page number 16 to be skipped and to be erroneously numbered as page 17. In support thereof, applicant submitted a copy of pages 15 and 16 of the specification.

It is obvious from the petition that the content of page 16 was not actually missing on June 3, 2005. Rather, the page was simply misnumbered as a result of applicant's filing error. However, the "Notice of Omitted Item(s)" mailed July 1, 2005, was correct in stated that page 16 of the specification appeared to have been omitted. Therefore, the "Notice" was properly mailed and will not be withdrawn.

To the extent the petition requests withdrawal of the Notice, the petition is **DISMISSED**.

The petition fee is required, since the petition was not necessary to correct any PTO error.

This application is being forwarded to the Office of Initial Patent Examination for processing with a filing date of June 3, 2005, and as appropriate, for processing of the substitute specification supplied on petition filed August 31, 2005.

Telephone inquiries concerning this decision should be directed to the undersigned at (571) 272-3219.

Nancy Johnson
Senior Petitions Attorney
Office of Petitions

UNITED STATES PATENT AND TRADEMARK OFFICE

COMMISSIONER FOR PATENTS
UNITED STATES PATENT AND TRADEMARK OFFICE
P.O. BOX 1450
ALEXANDRIA, VA 22313-1450
www.uspto.gov

Paper No.

Zackson Law LLC
1015 Locust Street Suite 750
St. Louis MO 63101-1324

MAILED
JUL 08 2010
OFFICE OF PETITIONS

In re Application of :
Milbrandt et al. :
Application No. 11/144,358 : ON APPLICATION FOR
Filed: June 3, 2005 : PATENT TERM ADJUSTMENT
Atty Docket No. 1001-0172 :
Title: METHODS AND :
COMPOSITIONS FOR TREATING :
NEUROPATHIES :

This is in response to the "STATEMENT UNDER 37 C.F.R. §1.705(b)(2)," filed June 2, 2010. Applicant submits that the correct patent term adjustment to be indicated on the patent is four hundred and four (404) days, not two hundred and seventy (270) days as calculated by the Office as of the mailing of the initial determination of patent term adjustment. Applicant requests this correction solely on the basis that the Office will take in excess of three years to issue this patent.

As the instant application for patent term adjustment requests reconsideration of the patent term adjustment as it relates to the Office's failure to issue the patent within 3 years of the filing date, the application for patent term adjustment under 37 CFR 1.705(b) is **DISMISSED as PREMATURE**.

Knowledge of the actual date the patent issues is required to calculate the amount, if any, of additional patent term patentee is entitled to for Office failure to issue the patent within 3 years. See § 1.702(b). (This is true even where a request for continued examination (RCE) was filed). The computer will not undertake the § 1.702(b) calculation until the actual date of issuance of the patent has been determined. Likewise, the computer will not calculate any further Office delay under § 1.702(a)(4) or applicant delay under § 1.704(c)(10) until the actual date of issuance of the patent has been determined. As

such, the Office cannot make a determination on the correctness of the patent term adjustment until the patent has issued.

Requesting reconsideration of the patent term adjustment to be indicated on the patent under 37 CFR 1.705(b) based on the initial determination of patent term adjustment and a projected issuance date of the patent (or even the filing date of the request for continued examination) is premature. Accordingly, it is appropriate to dismiss as premature such a request.

Rather than file an application for patent term adjustment under 37 CFR 1.705(b) contesting the 37 CFR 1.702(b) calculation at the time of the mailing of the notice of allowance, applicant is advised that they may wait until the time of the issuance of the patent and file a request for reconsideration of the patent term adjustment pursuant to 37 CFR 1.705(d). As the USPTO does not calculate the amount of time earned pursuant to 37 CFR 1.702(b) until the time of the issuance of the patent, the Office will consider any request for reconsideration of the patent term adjustment due to an error in the calculation of 37 CFR 1.702(b) to be timely if the request for reconsideration is filed within two months of the issuance of the patent. However, as to all other bases for contesting the initial determination of patent term adjustment received with the notice of allowance, applicant must timely file an application for patent term adjustment prior to the payment of the issue fee.[1]

The $200.00 fee set forth in 37 CFR 1.18(e) will be charged to Deposit Account No. 50-5219 in due course, as authorized on the Issue Fee Transmittal submitted concurrently with this petition. No additional fees are required.

Any request for reconsideration of the patent term adjustment indicated on the patent must be timely filed within 2 months

---

[1] For example, if applicant disputes both the calculation of patent term adjustment under 37 CFR 1.702(a)(1) for Office failure to mail a first Office action or notice of allowance not later than fourteen months after the date on which the application was filed and under 37 CFR 1.702(b) for Office failure to issue a patent within three years of the actual filing date of the application, then applicant must still timely file an application for patent term adjustment prior to the payment of the issue fee to contest the calculation of Office delay in issuing a first Office action or notice of allowance. See 37 CFR 1.705(b) and 35 U.S.C. 154(b)(3)(B). A dispute as to the calculation of the §1.702(a)(1) period raised on request for reconsideration of patent term adjustment under 37 CFR 1.705(d) will be dismissed as untimely filed.

after issuance pursuant to 37 CFR 1.705(d) and must include payment of the required fee under 37 CFR 1.18(e).

The Office of Data Management has been advised of this decision. This application is being referred to the Office of Data Management for issuance of the patent.

Telephone inquiries regarding this decision should be directed to Senior Attorney Paul Shanoski at (571) 272-3225.

Nancy Johnson
Senior Petitions Attorney
Office of Petitions

UNITED STATES PATENT AND TRADEMARK OFFICE

Commissioner for Patents
United States Patent and Trademark Office
P.O. Box 1450
Alexandria, VA 22313-1450
www.uspto.gov

HAHN LOESER & PARKS, LLP
ONE GOJO PLAZA, SUITE 300
AKRON, OH 44311-1076

COPY MAILED

SEP 1 0 2008

OFFICE OF PETITIONS

In re Application of	:	
Harrison Robert PAYNE	:	
Application No. 11/144,376	:	DECISION ON PETITION
Filed: June 3, 2005	:	TO WITHDRAW
Attorney Docket No. 200165.00007	:	FROM RECORD
	:	

This is a decision on the Request to Withdraw as attorney or agent of record under 37 C.F.R. § 1.36(b), filed July 25, 2008.

The request is **APPROVED**.

A grantable request to withdraw as attorney/agent of record must be signed by every attorney/agent seeking to withdraw or contain a clear indication that one attorney is signing on behalf of another/others. The Office requires the practitioner(s) requesting withdrawal to certify that he, she, or they have: (1) given reasonable notice to the client, prior to the expiration of the response period, that the practitioner(s) intends to withdraw from employment; (2) delivered to the client or a duly authorized representative of the client all papers and property (including funds) to which the client is entitled; and (3) notified the client of any responses that may be due and the time frame within which the client must respond, pursuant 37 CFR 10.40(c).

The request was signed by Mark A. Watkins on behalf of all attorneys associated with Customer Number 21324. All attorneys of record associated with Customer Number 21324 have been withdrawn.

Applicant is reminded that there is no attorney of record at this time.

The correspondence address of record has been changed and the new correspondence address is the address indicated below.

Telephone inquiries concerning this decision should be directed to the undersigned at 571-272-6735.

Diane Goodwyn
Petitions Examiner
Office of Petitions

cc: HARRISON PAYNE
468 N. CAMDEN DRIVE #300
BEVERLY HILLS, CA 90210-4520

Staple Here Only

UNITED STATES PATENT AND TRADEMARK OFFICE
CERTIFICATE OF CORRECTION

PATENT NO. .: 7,191,019

APPLICATION NO .: 11/144,381

DATED .: MARCH 13, 2007

INVENTOR(S) .: EDDY VERSTRAETEN

It is certified that an error appears in the above-identified patent and that said Letters Patent is hereby corrected as shown below:

Under "U.S. Patent Documents" please add the following:

6,125,904 A 10/03/2000 Kane et al.

MAILING ADDRESS OF SENDER:

Faustino A. Lichauco
Fish & Richardson P.C.
P.O. Box 1022
Minneapolis, Minnesota 55440-1022

SPE RESPONSE FOR CERTIFICATE OF CORRECTION

DATE : 10/18/07

Paper No.: ____

TO SPE OF : ART UNIT 2125

SUBJECT : Request for Certificate of Correction on Patent No.: 7191019

A response is requested with respect to the accompanying request for a certificate of correction.

Please complete this form and return with file, within 7 days to:
Palm location 7580, **Certificates of Correction Branch – South Tower – 9A22**
If response is for an IFW, **return to employee (named below) via PUBSCofC Team in MADRAS.**
With respect to the change(s) requested, correcting Office and/or Applicant's errors, should the patent read as shown in the certificate of correction (COCIN)? No new matter should be introduced, nor should the scope or meaning of the claims be changed.

Valerie Jackson

Thank You For Your Assistance

Certificates of Correction Branch
Tel. No. 703-308-9390 ext. 114

The request for issuing the above-identified correction(s) is hereby:
Note your decision on the appropriate box.

- xx ☐ **Approved** — All changes apply.
- ☐ **Approved in Part** — Specify below which changes **do not** apply.
- ☐ **Denied** — State the reasons for denial below.

Comments:

Please approve issue correction

Albert DeCady
SPE

2121
Art Unit

UNITED STATES PATENT AND TRADEMARK OFFICE

Commissioner for Patents
United States Patent and Trademark Office
P.O. Box 1450
Alexandria, VA 22313-1450
www.uspto.gov

MORRISON & FOERSTER LLP
425 MARKET STREET
SAN FRANCISCO, CA 94105-2482

COPY MAILED

JUN 19 2007

OFFICE OF PETITIONS

In re Application of
KUEHLMANN, Andreas et al.
Application No. 11/144,389
Filed: June 02, 2005
Attorney Docket No. **188122005800**

DECISION ON PETITION
TO WITHDRAW
FROM RECORD

This is a decision on the Request to Withdraw as attorney or agent of record under 37 C.F.R. § 1.36(b), filed March 14, 2007.

The request is **NOT APPROVED** as moot.

A review of the file record indicates that the power of attorney to Morrison & Foerster LLP has been revoked by the assignee of the patent application on April 26, 2007. Accordingly, the request to withdraw under 37 C.F.R. § 1.36(b) is moot.

All future communications from the Office will continue to be directed to the below-listed address until otherwise notified by applicant.

Telephone inquires concerning this decision should be directed to Michelle R. Eason at 571-272-4231.

Terri Williams
Petitions Examiner
Office of Petitions

cc: **SAN FRANCISCO OFFICE OF**
NOVAK, DRUCE & QUIGG LLP
1000 LOUISIANA STREET
FIFTY-THIRD FLOOR
HOUSTON TX 77002

UNITED STATES PATENT AND TRADEMARK OFFICE

Commissioner for Patents
United States Patent and Trademark Office
P.O. Box 1450
Alexandria, VA 22313-1450
www.uspto.gov

BRINKS HOFER GILSON & LIONE/INFINEON
INFINEON
P.O. BOX 10395
CHICAGO, IL 60610

COPY MAILED

APR 04 2008

OFFICE OF PETITIONS

In re Application of :
Martin Kerber :
Application No. 11/144,392 : ON PETITION
Filed: June 3, 2005 :
Attorney Docket No. 10808-255

This is a decision on the petition, filed April 2, 2008 under 37 CFR 1.313(c)(2) to withdraw the above-identified application from issue after payment of the issue fee.

The petition is **GRANTED**.

The above-identified application is withdrawn from issue for consideration of a submission under 37 CFR 1.114 (request for continued examination). See 37 CFR 1.313(c)(2).

Petitioner is advised that the issue fee paid on March 31, 2008 in the above-identified application cannot be refunded. If, however, the above-identified application is again allowed, petitioner may request that it be applied towards the issue fee required by the new Notice of Allowance.[1]

Telephone inquiries should be directed to Irvin Dingle at (571) 272-3210.

This matter is being referred to Technology Center AU 2812 for processing of the request for continued examination under 37 CFR 1.114 and for consideration of the concurrently filed Information Disclosure Statement.

Irvin Dingle
Petitions Examiner
Office of Petitions

---

[1] The request to apply the issue fee to the new Notice may be satisfied by completing and returning the new Issue Fee Transmittal Form PTOL-85(b), which includes the following language thereon: Commissioner for Patents is requested to apply the Issue Fee and Publication Fee (if any) or re-apply any previously paid issue fee to the application identified above. Petitioner is advised that, whether a fee is indicated as being due or not, the Issue Fee Transmittal Form **must** be completed and timely submitted to avoid abandonment. Note the language in bold text on the first page of the Notice of Allowance and Fee(s) Due (PTOL-85).

UNITED STATES PATENT AND TRADEMARK OFFICE

Commissioner for Patents
United States Patent and Trademark Office
P.O. Box 1450
Alexandria, VA 22313-1450
www.uspto.gov

BRINKS HOFER GILSON & LIONE/INFINEON
PO BOX 10395
CHICAGO, IL 60610

COPY MAILED
SEP 03 2008

In re Application of	:	
KERBER, Martin	:	
Application No. 11/144,392	:	DECISION GRANTING PETITION
Filed: June 3, 2005	:	UNDER 37 CFR 1.313(c)(2)
Attorney Docket No. 10808-255	:	

This is a decision on the petition under 37 CFR 1.313(c)(2), filed September 2, 2008, to withdraw the above-identified application from issue after payment of the issue fee.

The petition is GRANTED.

The above-identified application is withdrawn from issue for consideration of a submission under 37 CFR 1.114 (request for continued examination). *See* 37 CFR 1.313(c)(2).

Petitioner is advised that the issue fee paid on July 31, 2008 cannot be refunded. If, however, this application is again allowed, petitioner may request that it be applied towards the issue fee required by the new Notice of Allowance.[1]

Telephone inquiries should be directed to the undersigned at (571) 272-7253.

This application is being referred to Technology Center AU 2812 for processing of the request for continued examination under 37 CFR 1.114 and for consideration of the concurrently filed information disclosure statement.

Monica A. Graves
Petitions Examiner
Office of Petitions

---

[1] *The request to apply the issue fee to the new Notice may be satisfied by completing and returning the new Part B – Fee(s) Transmittal Form (along with any balance due at the time of submission). Petitioner is advised that the Issue Fee Transmittal Form* ***must*** *be completed and timely submitted to avoid abandonment of the application.*

UNITED STATES PATENT AND TRADEMARK OFFICE

COMMISSIONER FOR PATENTS
UNITED STATES PATENT AND TRADEMARK OFFICE
P.O. BOX 1450
ALEXANDRIA, VA 22313-1450
www.uspto.gov

FELLERS, SNIDER, BLANKENSHIP, BAILEY & TIPPENS, P.C.
100 NORTH BROADWAY
SUITE 1700
OKLAHOMA CITY, OK 73102-8820

MAILED
DEC 27 2005
Technology Center 2100

In re Application of: LUBBERS
Application No. 11/144,468
Filed: June 2, 2005
For: STRIPE BUFFER LIST

DECISION ON PETITION
TO MAKE SPECIAL
(ACCELERATED EXAMINATION)
UNDER M.P.E.P. §708.02 (VIII)

This is a response to the petition filed 28 October 2005 under 37 C.F.R. §1.102(d) and M.P.E.P. §708.02 (VIII): Accelerated Examination, to make the above-identified application special.

The Petition is **DISMISSED**.

M.P.E.P. §708.02, Section VIII which sets out the prerequisites for a grantable petition for Accelerated Examination under 37 C.F.R. §1.102(d) states in relevant part:

A new application (one which has not received any examination by the examiner) may be granted special status provided that applicant (and this term includes applicant's attorney or agent) complies with each of the following items:

(a) Submits a petition to make special accompanied by the fee set forth in **37 CFR 1.17(h)**;

(b) Presents all claims directed to a single invention, or if the Office determines that all the claims presented are not obviously directed to a single invention, will make an election without traverse as a prerequisite to the grant of special status;

(c) Submits a statement(s) that a pre-examination search was made, listing the field of search by class and subclass, publication, Chemical Abstracts, foreign patents, etc. The pre-examination search must be directed to the invention as claimed in the application for which special status is requested. A search made by a foreign patent office satisfies this requirement;

(d) Submits one copy each of the references deemed most closely related to the subject matter encompassed by the claims if said references are not already of record; and

(e) Submits a detailed discussion of the references, which discussion points out, with the particularity required by 37 CFR 1.111 (b) and (c), how the claimed subject matter is patentable over the references.

In those instances where the request for this special status does not meet all the prerequisites set forth above, **applicant will be notified and the defects in the request will be stated**. The application will remain in the status of a new application awaiting action in its regular turn. In those instances where a request is defective in one or more respects,

applicant will be given one opportunity to perfect the request in a renewed petition to make special. If perfected, the request will then be granted. If not perfected in the first renewed petition, any additional renewed petitions to make special may or may not be considered at the discretion of the Technology Center (TC) Special Program Examiner.

The petition filed 28 October 2005 fails to adequately meet requirement (e) of the criteria set forth above. The discussion of the references deemed most closely related is not sufficiently detailed. The description of each reference is only a few sentences long and gives only a cursory description. The description also fails to point to specific sections of the reference, e.g., column and line numbers or paragraph numbers. Additionally, the discussion of the references does not point out with the particularity required by 37 CFR 1.111(b) and (c) how the claimed subject matter is patentable over the references. It is not clear from the discussion how the claims are intended to distinguish from the references. For each reference it is stated that "aligning dedicated buffers in cache memory with virtual disc stripes in accordance with embodiments of the present invention" is not shown. However, the independent claims do not appear to require "aligning dedicated buffers in cache memory with virtual disc stripes" and it is not clear what is meant by the phrase "in accordance with embodiments of the present invention". If this phrase is intended to mean that the entirety of the independent claims are not shown by any of the references, it is noted that such a statement is not a sufficient detailed description as to anticipation. The discussion fails to point out which particular feature or features are not shown by the references such that the claims are not anticipated. I.e., regarding anticipation, stating that the references fail to show the claim in its entirety is simply a general allegation that does not comply with the requirements of 37 CFR 1.111(b) and (c).

Petition to Make Special **DISMISSED**.

Petitioner is given one opportunity to perfect the petition. Any request for reconsideration must be filed within TWO MONTHS of the mail date of this decision.

Until the renewed petition is submitted, the application will be returned to the examiner's docket to await treatment on the merits in the normal order of examination.

Pinchus M. Laufer
Special Program Examiner
Technology Center 2100
Computer Architecture, Software and Information Security
571-272-3599

ds

UNITED STATES PATENT AND TRADEMARK OFFICE

Commissioner for Patents
United States Patent and Trademark Office
P.O. Box 1450
Alexandria, VA 22313-1450
www.uspto.gov

FELLERS, SNIDER, BLANKENSHIP, BAILEY & TIPPENS, P.C.
100 NORTH BROADWAY, SUITE 1700
OKLAHOMA CITY, OK 73102-8820

MAILED

SEP 28 2006

TECHNOLOGY CENTER 2100

In re Application of: Clark E. LUBBERS
Application No. 11/144,468
Filed: June 2, 2005
For: STRIPE BUFFER LIST

DECISION ON PETITION
TO MAKE SPECIAL
(ACCELERATED EXAMINATION)
UNDER M.P.E.P. §708.02 (VIII)

This is a decision on the Request for Reconsideration filed February 27, 2006 on the petition to make special under 37 C.F.R. §102(d) and M.P.E.P. §708.02(VIII): Accelerated Examination, originally filed on October 28, 2005 and dismissed on December 27, 2005.

The Petition is **GRANTED**.

M.P.E.P. §708.02, Section VIII which sets out the prerequisites for a grantable petition for Accelerated Examination under 37 C.F.R. §1.102(d) states in relevant part:

A new application (one which has not received any examination by the examiner) may be granted special status provided that applicant (and this term includes applicant's attorney or agent) complies with each of the following items:

(a) Submits a petition to make special accompanied by the fee set forth in 37 CFR 1.17(h);

(b) Presents all claims directed to a single invention, or if the Office determines that all the claims presented are not obviously directed to a single invention, will make an election without traverse as a prerequisite to the grant of special status;

(c) Submits a statement(s) that a pre-examination search was made, listing the field of search by class and subclass, publication, Chemical Abstracts, foreign patents, etc. The pre-examination search must be directed to the invention as claimed in the application for which special status is requested. A search made by a foreign patent office satisfies this requirement;

(d) Submits one copy each of the references deemed most closely related to the subject matter encompassed by the claims if said references are not already of record; and

(e) Submits a detailed discussion of the references, which discussion points out, with the particularity required by 37 CFR 1.111 (b) and (c), how the claimed subject matter is patentable over the references.

Petition to Make Special **GRANTED** since all of the requirements for special status under MPEP § 708.02(VIII) have now been met.

The application file is being forwarded to the Examiner for accelerated examination in accordance with M.P.E.P. §708.02, Section VIII. If the application is subsequently allowed, it will be given priority for printing. See M.P.E.P. §1309.

Brian L. Johnson
Special Program Examiner
Technology Center 2100
Computer Architecture, Software and Information Security
571-272-3595

UNITED STATES PATENT AND TRADEMARK OFFICE

Commissioner for Patents
United States Patent and Trademark Office
P.O. Box 1450
Alexandria, VA 22313-1450
www.uspto.gov

WILLIAM W. HAEFLIGER
201 S. LAKE AVE, SUITE 512
PASADENA CA 91101

DEC 05 2005

In re Application of:	:	
GALVEZ, JAMES M.	:	DECISION ON PETITION
Serial No.: 11/144,515	:	TO MAKE SPECIAL
Filed: June 03, 2005	:	
Docket No.: **12744**	:	

This is a decision on the petition under 37 C.F.R. § 1.102(c), filed June 06, 2005, to make the above-identified application special.

Petitioner requests that the above-identified application be made special under the accelerated examination procedure set forth in the Manual of Patent Examining Procedure (M.P.E.P.) § 708.02, Section IV: Applicant's Age.

A grantable petition to make special under 37 C.F.R. § 1.102, and in accordance with M.P.E.P. § 708.02, Section IV, must include evidence showing that the applicant is sixty five (65) years of age or more. No fee is required for this petition.

The petition includes a statement from the applicant, James Galvez, stating that he is sixty-five (65) years of age or more.

Accordingly, the petition is GRANTED.

The application is being forwarded to the examiner for expedited prosecution. If the examiner can make this application special without prejudice to any possible interfering applications, and s/he should make a rigid search for such, s/he is authorized to do so for the next action. Should the application be rejected, the application will not be considered special for the subsequent action unless the applicant promptly makes a bona fide effort to place the application in condition for allowance, even if it is necessary to have an interview with the examiner to accomplish this purpose.

If the examiner finds any interfering application for the same subject matter, s/he should consider such application simultaneously with this application and should state in the official letter of such application that s/he is taking it out of its turn because of possible interference.

Should an appeal be taken in this application or should this application become involved in an interference, consideration of the appeal and the interference will be expedited by all Patent and

Trademark Office officials concerned, contingent likewise upon diligent prosecution by the applicant.

After allowance, this application will be given priority for printing. See M.P.E.P. § 1309.

Inquiries regarding this decision should be directed to Jose Dees at (571) 272-1569.

Jose Dees, Special Programs Examiner
Technology Center 2800
Semiconductors, Electrical and Optical
Systems and Components

UNITED STATES PATENT AND TRADEMARK OFFICE

Commissioner for Patents
United States Patent and Trademark Office
P.O. Box 1450
Alexandria, VA 22313-1450
www.uspto.gov

COPY MAILED

AUG 11 2009

OFFICE OF PETITIONS

BALLY GAMING INC.
6601 S. BERMUDA ROAD
LAS VEGAS NV 89119

In re Application of	:	
Robert A. LUCIANO, JR. et al.	:	
Application No. 11/144,519	:	DECISION ON PETITION
Filed: June 03, 2005	:	
Attorney Docket No. **1111-140-1003R**	:	

This is a decision on the petition under the unintentional provisions of 37 CFR 1.137(b), filed May 13, 2009, to revive the above-identified application.

The petition is **GRANTED**.

The application became abandoned for failure to reply in a timely manner to the non-final Office action mailed, May 28, 2008, which set a shortened statutory period for reply of three (3) months. No extensions of time under the provisions of 37 CFR 1.136(a) were obtained. Accordingly, the application became abandoned on August 29, 2008.

The petition satisfies the requirements of 37 CFR 1.137(b) in that petitioner has supplied (1) the reply in the form of an amendment, (2) the petition fee of $1620, and (3) a proper statement of unintentional delay. Accordingly, the reply to the non-final Office action of May 28, 2008 is accepted as having been unintentionally delayed.

An extension of time under 37 CFR 1.136 must be filed prior to the expiration of the maximum extendable period for reply. See In re Application of S., 8 USPQ2d 1630, 1631 (Comm'r Pats. 1988). Since the $1110 extension of time fee submitted with the petition on May 13, 2009 was subsequent to the maximum extendable period for reply, this fee is unnecessary and will be credited to petitioner's deposit account.

Telephone inquiries concerning this decision should be directed to Tredelle Jackson at (571) 272-2783.

This application is being referred to Technology Center AU 3714 for appropriate action on the concurrently filed amendment.

Ramesh Krishnamurthy

Ramesh Krishnamurthy
Petitions Examiner
Office of Petitions

UNITED STATES PATENT AND TRADEMARK OFFICE

COMMISSIONER FOR PATENTS
UNITED STATES PATENT AND TRADEMARK OFFICE
P.O. BOX 1450
ALEXANDRIA, VA 22313-1450
www.uspto.gov

EDWARDS LIFESCIENCES CORPORATION
LEGAL DEPARTMENT
ONE EDWARDS WAY
IRVINE, CA 92614

COPY MAILED

SEP 22 2005

OFFICE OF PETITIONS

In re Application of	:
Solem, et al.	: DECISION REFUSING STATUS
Application No. 11/144,521	: UNDER 37 CFR 1.47(a)
Filed: June 3, 2005	:
Atty. Dkt. No.: PVI-5840	:
For: DEVICES AND METHODS FOR	:
PERCUTANEOUS REPAIR OF THE	:
MITRAL VALVE VIA THE CORONARY	:
SINUS	:

This decision is in response to the petition under 37 CFR 1.47(a), filed September 1, 2005.

The petition is **DISMISSED**.

Rule 47 applicant is given TWO MONTHS from the mailing date of this decision to reply, correcting the below-noted deficiencies. Any reply should be entitled "Request for Reconsideration of Petition Under 37 CFR 1.47(a)," and should only address the deficiencies noted below, except that the reply may include an oath or declaration executed by the non-signing inventor. Failure to respond will result in abandonment of the application. Any extensions of time will be governed by 37 CFR 1.136(a).

The above-identified application was filed June 3, 2005 without an executed oath or declaration. Accordingly, a Notice to File Missing Parts of Nonprovisional Application was mailed July 1, 2005 requiring an executed oath or declaration and a surcharge.

A grantable petition under 37 CFR 1.47(a) requires: (1) proof that the non-signing inventor cannot be reached or refuses to sign the oath or declaration after having been presented with the application papers (specification, claims and drawings); (2) an acceptable oath or declaration in compliance with 35 U.S.C. §§ 115 and 116; (3) the petition fee; and (4) a statement of the last known address of the non-signing inventor.

The instant petition fails to satisfy requirement (1) set forth above. Petitioners allege that the USPS attempted without success to deliver a package containing a declaration and assignment document to the non-signing inventor.

It is unclear if petitioners are alleging that the inventor cannot be reached or located or that the inventor is refusing to execute the declaration.

Petitioners have failed to establish that inventor Octavian Iancea cannot be reached or located as petitioners have set forth no evidence of efforts made to locate the non-signing inventor.

Where inability to reach or locate a non-signing inventor is alleged, petitioners are required to establish that diligent effort was made to locate the non-signing inventor and provide the non-signing inventor with a complete copy of the patent application (specification, including claims, drawings, and oath or declaration).

To the extent petitioners allege the inventor cannot be reached or located, any renewed petition must be supported by evidence that sufficiently establishes that despite diligent effort, the non-signing inventor cannot be located. A statement of facts should be submitted that fully describes the exact facts that are relied on to establish that a *diligent effort* was made to locate the non-signing inventor. The statement of facts must be signed, where at all possible, by a person having *firsthand knowledge* of the facts recited therein. Statements based on hearsay, will not normally be accepted. At the very least, a search of the internet, telephone directories, and international registries should be undertaken in regions where it is suspected the non-signing inventor may reside. Petitioner should reference and supply evidence of any such searches in a renewed petition. *See*, MPEP 409.03(d).

Petitioners have further failed to establish that the non-signing refused to execute the oath or declaration after having been presented with the application papers.

Before a refusal to sign an oath or declaration can be alleged, it must be demonstrated that a *bona fide* effort has been made to present a copy of the application papers (specification, including claims, drawings, and oath or declaration) to the non-signing inventor. Petitioners have failed to establish that the non-signing inventor received a copy of the application papers

(specification, claims, drawings, and oath or declaration) and thereafter refused to execute the oath or declaration.

To the extent petitioners allege the non-signing inventor has refused to execute the oath or declaration, any renewed petition should be accompanied by evidence to establish that the non-signing inventor was sent a complete copy of the application papers (specification, claims, drawings, and oath or declaration) and thereafter refused to execute the declaration. Petitioner may wish to provide the Office copies of letters sent to the inventors indicating the enclosure of the application papers (specification, claims, drawings, and oath or declaration). If after the inventor receives the application papers and requests to execute the oath or declaration are refused, these facts should be set forth in a statement of facts signed by the person to whom the refusals were made and detailing with specificity the exact manner of the refusals. If a written refusal has been made, a copy of the written refusal should be included on renewed petition.

Further correspondence with respect to this matter should be addressed as follows:

By mail: Mail Stop Petition
Commissioner for Patents
P.O. Box 1450
Alexandria, VA 22313-1450

By facsimile: (571) 273-8300

By hand: U.S. Patent and Trademark Office
Customer Service Window
Mail Stop Petition
Randolph Building
401 Dulaney Street
Alexandria, VA 22314

Telephone inquiries regarding this decision should be directed to the undersigned at (571) 272-3205.

Alesia M. Brown
Petitions Attorney
Office of Petitions

UNITED STATES PATENT AND TRADEMARK OFFICE

COMMISSIONER FOR PATENTS
UNITED STATES PATENT AND TRADEMARK OFFICE
P.O. BOX 1450
ALEXANDRIA, VA 22313-1450
www.uspto.gov

COPY MAILED

MAR 1 5 2006

OFFICE OF PETITIONS

EDWARDS LIFESCIENCES CORPORATION
LEGAL DEPARTMENT
ONE EDWARDS WAY
IRVINE, CA 92614

In re Application of	:
Solem, et al.	: DECISION GRANTING STATUS
Application No. 11/144,521	: UNDER 37 CFR 1.47(a)
Filed: June 3, 2005	:
Atty. Dkt. No.: PVI-5840	:
For: DEVICES AND METHODS FOR	:
PERCUTANEOUS REPAIR OF THE	:
MITRAL VALVE VIA THE CORONARY	:
SINUS	:

This decision is in response to the renewed petition under 37 CFR 1.47(a), filed November 22, 2005.

The petition is **GRANTED**.

Petitioner has shown that inventor Octavian Iancea cannot be reached or located for presentation of the application papers.

The above-identified application and papers have been reviewed and found in compliance with 37 CFR 1.47(a). This application is hereby accorded Rule 1.47(a) status.

As provided in Rule 1.47(c), this Office will forward notice of this application's filing to the non-signing inventors at the addresses given in the petition. Notice of the filing of this application will also be published in the Official Gazette.

After this decision is mailed, the above-identified application will be returned to the Office of Initial Patent Examination for further processing.

Telephone inquiries regarding this decision should be directed to the undersigned at (571) 272-3205.

Alesia M. Brown
Petitions Attorney
Office of Petitions

UNITED STATES PATENT AND TRADEMARK OFFICE

COMMISSIONER FOR PATENTS
UNITED STATES PATENT AND TRADEMARK OFFICE
P.O. BOX 1450
ALEXANDRIA, VA 22313-1450
www.uspto.gov

OCTAVIAN IANCEA
287 GIOTTO STREET
IRVINE, CA 92614

In re Application of Solem, et al. Application No. 11/144,521 Filed: June 3, 2005 Atty. Dkt. No.: PVI-5840 For: DEVICES AND METHODS FOR PERCUTANEOUS REPAIR OF THE MITRAL VALVE VIA THE CORONARY SINUS	: LETTER	COPY MAILED MAR 15 2006 OFFICE OF PETITIONS

Dear Sir:

You are named as an inventor in the above-identified United States patent application filed under the provisions of 35 U.S.C. 116 (United States Code) and 37 C.F.R. § 1.47(a), Rules of Practice in Patent Cases. Should a patent be granted on the application you will be designated therein as a joint inventor.

As a named inventor you are entitled to inspect any paper in the file wrapper of the application, order copies of all or any part thereof (at a prepaid cost as per 37 C.F.R. § 1.19) or make your position of record in the application. Alternatively, you may arrange to do any of the preceding through a registered patent attorney or agent presenting written authorization from you. If you care to join the application, counsel of record (see below) would presumably assist you. Joining in the application would entail the filing of an appropriate oath or declaration by you pursuant to 37 C.F.R. § 1.63.

Telephone inquiries regarding this communication should be directed to the undersigned at (571) 272-3205. Requests for information regarding your application should be directed to the File Information Unit at (703) 308-2733. Information regarding how to pay for and order a copy of the application, or a specific paper in the application, should be directed to Certification Division at (703) 308-9726 or 1-800-972-6382 (outside the Washington D.C. area).

Telephone inquiries regarding this matter should be directed to the undersigned at (571) 272-3205.

Alesia M. Brown
Petitions Attorney
Office of Petitions

UNITED STATES PATENT AND TRADEMARK OFFICE

Commissioner for Patents
United States Patent and Trademark Office
P.O. Box 1450
Alexandria, VA 22313-1450
www.uspto.gov

DEBORAH NEVILLE
PO BOX 61063
PALO ALTO, CA 94306

MAILED

MAR 2 9 2010

OFFICE OF PETITIONS

In re Application of
Peter Bostwick
Application No. 11/144,528
Filed: June 2, 2005
Attorney Docket No. BOS06022005

DECISION ON PETITION
TO WITHDRAW
FROM RECORD

This is a decision on the Request to Withdraw as attorney or agent of record under 37 C.F.R. § 1.36(b), filed January 14, 2010.

The request is **APPROVED**.

A grantable request to withdraw as attorney/agent of record must be signed by every attorney/agent seeking to withdraw or contain a clear indication that one attorney is signing on behalf of another/others.

The request was signed by Deborah Neville on behalf of all attorneys of record who are associated with this application. All attorneys/agents associated with this application have been withdrawn. Applicant is reminded that there is no attorney of record at this time.

The correspondence address of record has been changed and the new correspondence address is the address indicated below.

There is an outstanding Office action mailed January 5, 2010 that requires a reply from the applicant.

Telephone inquiries concerning this decision should be directed to undersigned at 571-272-1642. All other inquiries concerning the examination or status of this application should be directed to the Technology Center.

/AMW/
April M. Wise
Petitions Examiner
Office of Petitions

cc: PETER BOSTWICK
405 EL CAMINO REAL, #303
MENLO PARK, CA 94025

UNITED STATES PATENT AND TRADEMARK OFFICE

UNITED STATES DEPARTMENT OF COMMERCE
United States Patent and Trademark Office
Address: COMMISSIONER FOR PATENTS
P.O. Box 1450
Alexandria, Virginia 22313-1450
www.uspto.gov

APPLICATION NUMBER	FILING OR 371(C) DATE	FIRST NAMED APPLICANT	ATTY. DOCKET NO./TITLE
11/144,528	06/02/2005	Peter Bostwick	BOS06022005

CONFIRMATION NO. 1123

POWER OF ATTORNEY NOTICE

Deborah Neville
PO BOX 61063
Palo Alto, CA 94306

OC000000040758060

Date Mailed: 03/23/2010

NOTICE REGARDING CHANGE OF POWER OF ATTORNEY

This is in response to the Power of Attorney filed 01/14/2010.

- The withdrawal as attorney in this application has been accepted. Future correspondence will be mailed to the new address of record. 37 CFR 1.33.

/amwise/

Office of Data Management, Application Assistance Unit (571) 272-4000, or (571) 272-4200, or 1-888-786-0101

UNITED STATES PATENT AND TRADEMARK OFFICE

Commissioner for Patents
United States Patent and Trademark Office
P.O. Box 1450
Alexandria, VA 22313-1450
www.uspto.gov

MORRISON AND FOERSTER, LLP
425 MARKET STREET
SAN FRANCISCO, CA 94105

COPY MAILED

AUG 09 2007

OFFICE OF PETITIONS

In re Application of	:	
Michael D. KENNEDY, et al	:	
Application No. 11/144,538	:	DECISION ON PETITION
Filed: June 3, 2005	:	TO WITHDRAW
Attorney Docket No. 146712015911	:	FROM RECORD
	:	

This is a decision on the Request to Withdraw as attorney or agent of record under 37 C.F.R. § 1.36(b), filed May 9, 2007.

The request is **DISMISSED** as moot.

A review of the file record indicates that the power of attorney given to Morrison and Foerster, LLP has been revoked by the applicant of the patent application on June 30, 2007. Accordingly, the request to withdraw under 37 C.F.R. § 1.36(b) is moot.

The correspondence address of record has been changed and the new correspondence address is the address indicated below.

Telephone inquires concerning this decision should be directed to Diane Goodwyn at 571-272-6735.

April Wise
Petitions Examiner
Office of Petitions

cc: STEPHEN C. DURANT
NOVAK DRUCE & QUIGG, LLP
SPEAR STREET TOWER, 35TH FLOOR
ONE MARKET PLAZA
SAN FRANCISO, CA 94105

UNITED STATES PATENT AND TRADEMARK OFFICE

Commissioner for Patents
United States Patent and Trademark Office
P.O. Box 1450
Alexandria, VA 22313-1450
www.uspto.gov

DOW AGROSCIENCES LLC
9330 ZIONSVILLE RD
INDIANAPOLIS, IN 46268

COPY MAILED

SEP 26 2005

OFFICE OF PETITIONS

In re Application of	:
Paulo Jesus Pereira	:
Application No. 11/144,554	: DECISION REFUSING STATUS
Filed: June 3, 2005	: UNDER 37 CFR 1.47(b)
Attorney Docket No. 63,523A	:
For: INBRED CORN LINE BS112	

This is a decision on the petition under 37 CFR 1.47(b), filed September 6, 2005.

The petition under 37 CFR 1.47(b) is **dismissed.**

Any request for reconsideration under this decision must be submitted within TWO (2) MONTHS from the mail date of this decision. Extensions of time under 37 CFR 1.136(a) are permitted. Failure to respond will result in the abandonment of this application. Any response should be titled "Request for Reconsideration of Petition Under 37 CFR 1.47(b).

The above-identified application was filed on June 3, 2005, without an executed oath or declaration or filing fee. Accordingly, a "Notice to File Missing Parts Nonprovisional Application" (the "Notice") was mailed on July 6, 2005, requiring an executed oath or declaration and a surcharge for the late filing of the oath or declaration. The instant petition was filed on September 6, 2005.

A grantable petition under 37 CFR 1.47(b) requires:

(1) proof that the non-signing inventor(s) cannot be reached or refuses to sign the oath or declaration after having been presented with the application papers (specification, claims, and drawings);

(2) an acceptable oath or declaration in compliance with 35 U.S.C. §§ 115 and 116;

(3) the petition fee

(4) a statement of the last known address of the non-signing inventor,

(5) proof of proprietary interest, and

(6) a showing (statement) that such action is necessary to preserve the rights of the parties or to prevent irreparable damage.

The instant petition lacks items (2), (5), and (6) as set forth above.

As to item (2), the declaration filed is not executed by an authorized party. Section 409.03(b) of the *Manual of Patent Examining Procedure* ("MPEP") states, in pertinent part, that:

> [t]he 37 CFR 1.47(b) applicant must make the oath required by 37 CFR 1.63 and 1.64 or 1.175. Where a corporation is the 37 CFR 1.47(b) applicant, an officer (President, Vice-President, Secretary, Treasurer, or Chief Executive Officer) thereof should normally sign the necessary oath or declaration. A corporation may authorize any person including an attorney or agent registered to practice before the US Patent and Trademark Office, to sign the application oath or declaration on its behalf. Where an oath is signed by a registered attorney or agent on behalf of a corporation, either proof of the attorney's or agent's authority in the form of a statement signed by an appropriate corporate officer must be submitted, or the attorney or agent may simply state that he or she is authorized to sign on behalf of the corporation.

The declaration filed is not executed by anyone. A signature of an authorized corporate official, attorney or agent, is necessary in order for the declaration to be considered valid. Petitioner is also cautioned to adhere to the guidance provided in Section 409.03(b) relative to establishing that person signing the declaration is, in fact, authorized to make the representations on behalf of the company.

Further as to item (2), if the 37 CFR 1.47(b) is an assignee, the declaration cannot be accepted until the assignee demonstrates that it has the power to prosecute the application. Section 409.03(b) of the *Manual of Patent Examining Procedure* provides, in pertinent part, that, "[w]here the oath or declaration is being signed on behalf of an assignee, see MPEP 324." Section 324 of the Manual of Patent Examining Procedure cites 37 CFR 3.71(c) which states that, "[a]n assignee becomes of record either in a national patent application or a reexamination proceeding by filing a statement in compliance with 3.73(b) that is signed by a party who is authorized to act on behalf of the assignee." Petitioner should note that 37 CFR 3.73 requires that before an assignee can take action in a patent matter, the assignee must establish ownership of the patent property in accordance with 37 CFR 3.73(b)(1)(i) or (ii). No statement or certificate meeting the requirements of 37 CFR 3.73 was found with the petition. Petitioner must properly establish ownership of the patent property before the assignee will be granted authority under 37 CFR 1.47(b) to prosecute the application. Enclosed is a "Statement Under 37 CFR 3.73(b)" that petitioner may use to satisfy this requirement.

As to item (6), petitioner has not established that a filing date is necessary to preserve the rights of the party or prevent irreparable harm. This showing may be made by a statement to that effect and should accompany any renewed petition filed. *See MPEP* 409.03(g).

Further correspondence with respect to this matter should be addressed as follows:

By mail: Mail Stop Petitions
Commissioner for Patents
P.O. Box 1450
Alexandria, VA 22313-1450

By FAX: (571) 273-8300
Attn: Office of Petitions

Telephone inquiries should be directed to the undersigned at (571) 272-3222.

Kenya A. McLaughlin
Petitions Attorney
Office of Petitions

Enclosure: Form PTO/SB/96—"Statement Under 37 CFR 3.73(b)"

UNITED STATES PATENT AND TRADEMARK OFFICE

Commissioner for Patents
United States Patent and Trademark Office
P.O. Box 1450
Alexandria, VA 22313-1450
www.uspto.gov

DOW AGROSCIENCES LLC
9330 ZIONSVILLE RD
INDIANAPOLIS, IN 46268

COPY MAILED
DEC 12 2005
OFFICE OF PETITIONS

In re Application of :
Paulo Jesus Pereira :
Application No. 11/144,554 : DECISION ACCORDING STATUS
Filed: June 3, 2005 : UNDER 37 CFR 1.47(b)
Attorney Docket No. 63,523A :
For: INBRED CORN LINE BS112

This is in response to the renewed petition under 37 CFR 1.47(b), filed November 28, 2005 (certificate of mailing dated November 22, 2005).

The renewed petition is **GRANTED**.

The above-identified application and papers have been reviewed and found in compliance with 37 CFR 1.47(b). This application is hereby accorded Rule 1.47(b) status.

The above-identified application was filed on June 3, 2005, without an executed oath or declaration or filing fee. Accordingly, a "Notice to File Missing Parts Nonprovisional Application" (the "Notice") was mailed on July 6, 2005, requiring an executed oath or declaration and a surcharge for the late filing of the oath or declaration. A petition under 37 CFR 1.47(b) was filed on September 6, 2005, and dismissed by a decision mailed September 26, 2005.

By the instant petition and evidentiary documents, petitioner has established that the sole inventor has refused to join the prosecution of the application and that the 37 CFR 1.47(b) applicant has sufficient proprietary interest to proceed with prosecution of the application without the sole inventor.

As provided in Rule 1.47(c), this Office will forward notice of this application's filing to the non-signing inventor at the address given in the petition. Notice of the filing of this application will also be published in the Official Gazette.

This application will be forwarded to the Office of Initial Patent Examination for further processing.

Telephone inquiries should be directed to the undersigned at (571) 272-3222.

Kenya A. McLaughlin
Petitions Attorney
Office of Petitions

UNITED STATES PATENT AND TRADEMARK OFFICE

JUL 25 2007

Commissioner for Patents
United States Patent and Trademark Office
P.O. Box 1450
Alexandria, VA 22313-1450
www.uspto.gov

DOW AGROSCIENCES LLC
9330 ZIONSVILLE RD
INDIANAPOLIS IN 46268

In re Application of :	:
Paulo Jesus Pereira	:
Serial No.: 11/144,554	: PETITION DECISION
Filed: June 3, 2005	:
Attorney Docket No.: 63,523A	

This is in response to the petition under 37 CFR § 1.59(b), filed July 5, 2007, to expunge information from the above identified application. This application has not been allowed.

Petitioner requests that the Reply to Request for Information Under 37 CFR 1.105, and attachment thereto, submitted to the Patent Office on July 5, 2007, be expunged from the record. Petitioner states either: (A) that the information contains trade secret material, proprietary material and/or material that is subject to a protective order which has not been made public; or (B) that the information submitted was unintentionally submitted and the failure to obtain its return would cause irreparable harm to the party who submitted the information or to the party in interest on whose behalf the information was submitted, and the information has not otherwise been made public. The petition fee set forth in 37 CFR § 1.17(g) has been paid.

This is an examined application which is currently under non-final rejection. As such the information provided has been reviewed, in part, but proceedings in the application have not been terminated. As stated in M.P.E.P. 724, upon allowance or other action closing prosecution in an application, petition may be made for return of Proprietary information. The information cannot be expunged at this time.

The petition is **DISMISSED**. Applicants may resubmit the petition subsequent to a Notice of Allowability or *ex parte Quayle* action being mailed in the application. No additional petition fee will be required at that time.

Should there be any questions about this decision please contact Marianne C. Seidel by letter addressed to Director, TC 1600, at the address listed above, or by telephone at 571-272-0584 or by facsimile sent to the general Office facsimile number, 703-872-9306.

Marianne C. Seidel
Quality Assurance Specialist/Program Examiner
Technology Center 1600

UNITED STATES PATENT AND TRADEMARK OFFICE

COMMISSIONER FOR PATENTS
UNITED STATES PATENT AND TRADEMARK OFFICE
P.O. BOX 1450
ALEXANDRIA, VA 22313-1450
www.uspto.gov

DEC -7 2005

In re Application of	:	
Peter F. Van Dyke	:	
Serial No. 11/144,563	:	DECISION ON PETITION
Filed: June 3, 2005	:	TO MAKE SPECIAL
For: APPARATUS AND METHOD FOR	:	
PRACTICING GOLF BALL PUTTING	:	

Applicant's petition, filed August 2, 2005, requests that this application be rendered special for examination in that applicant is over sixty-five (65) years of age.

The petition has been reviewed and is found to be in compliance with the requirements for special status as set forth in Section 708.02(IV) of the Manual of Patent Examining Procedure (MPEP).

PETITION GRANTED.

Richard A. Bertsch, Director
Technology Center 3700

Robert H. Resis
Banner and Witcoff, Ltd.
Ten South Wacker Drive, Suite 3000
Chicago, IL 60606

UNITED STATES PATENT AND TRADEMARK OFFICE

Commissioner for Patents
United States Patent and Trademark Office
P.O. Box 1450
Alexandria, VA 22313-1450
www.uspto.gov

ROPES & GRAY LLP
PATENT DOCKETING 39/361
1211 AVENUE OF THE AMERICAS
NEW YORK NY 10036-8704

MAILED

FEB 23 2010

OFFICE OF PETITIONS

In re Patent No. 6,990,865	:	
Issue Date: January 31, 2006	:	
Application No. 11/144,581	:	ON PETITION
Filed: June 3, 2005	:	
Attorney Docket No. WR-2 DIV. 1	:	

This is a notice regarding your request for acceptance of a fee deficiency submission under 37 CFR 1.28. On September 1, 1998, the Court of Appeals for the Federal Circuit held that 37 CFR 1.28(c) is the sole provision governing the time for correction of the erroneous payment of the issue fee as a small entity. **See DH Technology v. Synergystex International, Inc. 154 F.3d 1333, 47 USPQ2d 1865 (Fed. Cir. Sept. 1, 1998).**

The Office no longer investigates or rejects original or reissue applications under 37 CFR 1.56. **1098 Off. Gaz. Pat. Office 502 (January 3, 1989)**. Therefore, nothing in this Notice is intended to imply that an investigation was done.

Your fee deficiency submission under 37 CFR 1.28 is hereby **ACCEPTED**.

It is not apparent whether the person signing the instant petition was ever given a power of attorney or authorization of agent to prosecute this patent. In accordance with 37 CFR 1.34(a), the signature appearing on the petition shall constitute a representation to the United States Patent and Trademark Office that he/she is authorized to represent the particular party in whose behalf he/she acts. Further, the address given on the petition differs from the address of record. A courtesy copy of this decision is being mailed to the address given on the petition; however, the Office will mail all future correspondence solely to the address of record.

This patent is no longer entitled to small entity status. Accordingly, all future fees paid in this patent must be paid at the large entity rate.

Telephone inquiries concerning this decision should be directed to the undersigned at (571) 272-7751.

Joan Olszewski
Petitions Examiner
Office of Petitions

cc: Harris A. Wolin
Graham Curtin, P.A.
4 Headquarters Plaza
P.O. Box 1991
Morristown, NJ 07962-1991

UNITED STATES PATENT AND TRADEMARK OFFICE

Commissioner for Patents
United States Patent and Trademark Office
P.O. Box 1450
Alexandria, VA 22313-1450
www.uspto.gov

BLAKELY SOKOLOFF TAYLOR & ZAFMAN
1279 OAKMEAD PARKWAY
SUNNYVALE CA 94085-4040

COPY MAILED

MAY 2 0 2008

OFFICE OF PETITIONS

In re Application of	:	
Thomas **Mossberg** et al.	:	
Application No. 11/144,583	:	DECISION ON PETITION
Filed: June 03, 2005	:	
Attorney Docket No. 42P13961X2D2	:	

This is a decision on the petition under the unintentional provisions of 37 CFR 1.137(b), filed February 28, 2008, to revive the above-identified application.

The petition is **GRANTED**.

The two-month period for filing an appeal brief under 37 CFR 41.37 (accompanied by the fee required by 37 CFR 41.20(b)(2)), runs from the date of this decision.

This application became abandoned for failure to timely file a reply within the meaning of 37 CFR 1.113 to the final Office action of May 18, 2007. The proposed reply required for consideration of a petition to revive must be a Notice of Appeal (and appeal fee required by 37 CFR 41.20(b)(2)), an amendment that *prima facie* places the application in condition for allowance, a Request for Continued Examination (RCE) and submission (37 CFR 1.114), or the filing of a continuing application under 37 CFR 1.53(b). See MPEP 711.03(c)(III)(A)(2). No extensions of time pursuant to the provisions of 37 CFR 1.136(a) were obtained. Accordingly, the date of abandonment of this application is August 19, 2007.

The petition satisfies the requirements of 37 CFR 1.137(b) in that petitioner has supplied (1) the reply in the form of Notice of Appeal under 37 CFR 41.31; (2) the petition fee of $1,540.00; and (3) a statement of unintentional delay.

37 CFR 1.137(b)(3) requires a statement that "the entire delay in filing the required reply from the due date for the reply until the filing of a grantable petition pursuant to 37 CFR 1.137(b) was unintentional." Since the statement appearing in the petition varies from the language required by 37 CFR 1.137(b)(3), the statement is being construed as the required statement. Petitioner must notify the Office if this is **not** a correct reading of the statement appearing in the petition.

Telephone inquiries concerning this decision should be directed to Thuy Pardo at (571) 272-6052 or in her absence, the undersigned at (571) 272-7099.

This application is being referred to Technology Center AU 2872 for appropriate action by the Examiner in the normal course of business on the reply received

for David A. Bucci
Petitions Examiner
Office of Petitions

UNITED STATES PATENT AND TRADEMARK OFFICE

Commissioner for Patents
United States Patent and Trademark Office
P.O. Box 1450
Alexandria, VA 22313-1450
www.uspto.gov
DIW Dec-08

JOSEPH D'ANGELO
11 WASHINGTON ST.
CONCORD NH 03301

COPY MAILED
DEC 1 2 2008

In re Application of	:	
Arias-Vargas et al.	:	DECISION ON PETITION
Application Number: 11/144585	:	
Filing Date: 06/04/2005	:	
Attorney Docket Number: JD-05-001	:	

This is a decision on the petition, filed on July 3, 2008, requesting that papers filed on June 30, 2008 be expunged.

The petition is **DISMISSED**.

Petitioner states that the response to the Office action mailed on January 31, 2008 contained an incorrect document. Petitioners request that the incorrect reply which was previously filed be removed from the file and replaced with the amendment filed with the subject petition.

Petitioner therefore seeks to have the reply filed on June 30, 2008, expunged from the file.

37 C.F.R. §1.59 sets forth:

(a)
(1) Information in an application will not be expunged, except as provided in paragraph (b) of this section or § 41.7(a) of this title.
(2) Information forming part of the original disclosure (i.e., written specification including the claims, drawings, and any preliminary amendment specifically incorporated into an executed oath or declaration under §§ 1.63 and 1.175) will not be expunged from the application file.
(b) An applicant may request that the Office expunge information, other than what is excluded by paragraph (a)(2) of this section, by filing a petition under this paragraph. Any petition to expunge information from an application must include the fee set forth in § 1.17(g) and establish to the satisfaction of the Director that the expungement of the information is appropriate in which case a notice granting the petition for expungement will be provided.

(c) Upon request by an applicant and payment of the fee specified in § 1.19(b), the Office will furnish copies of an application, unless the application has been disposed of (see §§ 1.53(e), (f) and (g)). The Office cannot provide or certify copies of an application that has been disposed of. [48 FR 2710, Jan. 20, 1983, effective Feb. 27, 1983; 49 FR 554, Jan. 4, 1984, effective Apr. 1, 1984; 49 FR 48416, Dec. 12, 1984, effective Feb. 11, 1985; 50 FR 23123, May 31, 1985, effective Feb. 11, 1985; revised, 60 FR 20195, Apr. 25, 1995, effective June 8, 1995; revised, 62 FR 53131, Oct. 10, 1997, effective Dec. 1, 1997; para. (b) revised, 65 FR 54604, Sept. 8, 2000, effective Nov. 7, 2000; para. (b) revised, 68 FR 14332, Mar. 25, 2003, effective May 1, 2003; revised, 68 FR 38611, June 30, 2003, effective July 30, 2003; para. (a)(1) revised, 69 FR 49959, Aug. 12, 2004, effective Sept. 13, 2004; para. (b) revised, 69 FR 56481, Sept. 21, 2004, effective Nov. 22, 2004]

The petition lacks the $200.00 fee required by 37 CFR 1.17(g) as specified in 37 CFR 1.59(b).

37 CFR 1.22(a) states that patent fees and charges payable to the United States Patent and Trademark Office are required to be paid in advance; that is, at the time of requesting any action by the Office for which a fee or charge is payable with the exception that under § 1.53 applications for patent may be assigned a filing date without payment of the basic filing fee.

It is further noted that on June 30, 2008, a two (2) month extension of time fee was paid with the reply filed. A three (3) month extension of time is required to have been filed with the reply filed on July 3, 2008, however, for that reply to be timely filed. However, no extension of time fee or authorization to charge the extension of time fee was filed with the amendment filed on July 3, 2008. A request for an extension of time and the proper fee must be submitted during the relevant period being extended. Accordingly, if the petition is granted, and the reply filed on June 30, 2008, is expunged, the application will be **abandoned** for failure to timely file a reply to the non-final Office action mailed on January 31, 2008.

The address in the petition is different than the correspondence address. A courtesy copy of this decision will be mailed to the address in the petition. All future correspondence, however, will be mailed solely to the address of record. A change of correspondence address should be filed if the correspondence address needs to be updated.

Further correspondence with respect to this matter should be addressed as follows:

By mail: Mail Stop Petition
Commissioner for Patents
P.O. Box 1450
Alexandria, VA 22313-1450

By FAX: (571) 273-8300
Attn: Office of Petitions

By hand: Customer Service Window
Mail Stop Petition
Randolph Building
401 Dulany Street
Alexandria, VA 22314

Telephone inquiries concerning this matter may be directed to Senior Petitions Attorney Douglas I. Wood at (571) 272-3231.

Anthony Knight
Supervisor
Office of Petitions

Cc:

JOSEPH J. D'ANGELO
15A CHURCH ST.
HOPKINTON MA 01748

UNITED STATES PATENT AND TRADEMARK OFFICE

UNITED STATES DEPARTMENT OF COMMERCE
United States Patent and Trademark Office
Address: COMMISSIONER FOR PATENTS
P.O. Box 1450
Alexandria, Virginia 22313-1450
www.uspto.gov

QUARLES & BRADY LLP
RENAISSANCE ONE
TWO NORTH CENTRAL AVENUE
PHOENIX, AZ 85004-2391

Mail Date: 04/20/2010

Applicant	: Chris J. Warner	: DECISION ON REQUEST FOR
Patent Number	: 7603432	: RECALCULATION of PATENT
Issue Date	: 10/13/2009	: TERM ADJUSTMENT IN VIEW
Appliction No	: 11/144,611	: OF WYETH AND NOTICE OF INTENT TO
Filed	: 06/06/2005	: ISSUE CERTIFICATE OF CORRECTION
		:

The Request for Recalculation is **GRANTED** to the extent indicated.

The patent term adjustment has been determined to be **671** days. The USPTO will *sua sponte* issue a certificate of correction reflecting the amount of PTA days determined by the recalculation.

Prior to the issuance of the certificate of correction, the USPTO will afford patentee an opportunity to be heard and request reconsideration. Accordingly, patentee has **one month or thirty (30) days**, whichever is longer, to file a request for reconsideration of this patent term adjustment calculation. See 35 U.S.C. 154(b)(3)(B)(ii) and 37 CFR 1.322(a)(4). No extensions of time will be granted under 37 CFR 1.136.

Patentee should use document code PET.OP if electronically filing a request for reconsideration of this patent term adjustment calculation. The patentee must also include the information required by 37 CFR 1.705(b)(2) and the fee required by 37 CFR 1.18(e). If patentee does not file a timely request for reconsideration of this patent term adjustment calculation including the information required by 37 CFR 1.705(b)(2) and the fee required by 37 CFR 1.18(e), the USPTO will issue a certificate of correction reflecting the PTA determination noted above.

Patentee should be aware that in order to preserve the right to review in the United States District Court for the District of Columbia of the USPTO patent term adjustment determination, patentee must ensure that he or she also take the steps required under 35 U.S.C. 154(b)(4)(A) in a timely manner. Nothing in the request for recalculation should be construed as providing an alternative time frame for commencing a civil action under 35 U.S.C. 154(b)(4)(A).

Any questions concerning this decision should be directed to the Office of Patent Legal Administration at 571-272-7702.

UNITED STATES PATENT AND TRADEMARK OFFICE

UNITED STATES DEPARTMENT OF COMMERCE
United States Patent and Trademark Office
Address: COMMISSIONER FOR PATENTS
P.O. Box 1450
Alexandria, Virginia 22313-1450
www.uspto.gov

QUARLES & BRADY LLP
RENAISSANCE ONE
TWO NORTH CENTRAL AVENUE
PHOENIX, AZ 85004-2391

Mail Date: 05/17/2010

Applicant : Chris J. Warner
Patent Number : 7603432
Issue Date : 10/13/2009
Application No : 11/144,611
Filed : 06/06/2005

: NOTICE CONCERNING IMPROPER
: CALCULATION OF PATENT TERM
: ADJUSTMENT BASED UPON USPTO
: IMPROPERLY MEASURING REDUCTION
: PERIOD UNDER 37 CFR 1.704(c)(10).

The United States Patent and Trademark Office (USPTO) discovered that in processing the recent recalculation decisions mailed in response to patentee's filed Request for Recalculation of Patent Term Adjustment in view of Wyeth, the USPTO improperly measured the reduction period for reductions under 37 CFR 1.704(c)(10). Pursuant to 37 CFR 1.704(c)(10), patentee's reduction begins on the date of filing the amendment under 37 CFR 1.312 ("1.312 amendment") or other related paper and ends on the date that the Office mails a response to the filing of the 1.312 amendment or other paper. It has been discovered that during the recalculation, the calculation failed to the limit the reduction to the mail date of the response to the 1.312 amendment or other paper. Accordingly, patentee's reductions were greater than warranted.

This notice **VACATES** the previous GRANTED request for recalculation and provides patentee with a revised GRANTED recalculation.

The patent term adjustment has been determined to be **699** days. The USPTO will *sua sponte* issue a certificate of correction reflecting the amount of patent term adjustment (PTA) days determined by the recalculation.

Prior to the issuance of the certificate of correction, the USPTO will afford patentee an opportunity to be heard and request reconsideration. Accordingly, patentee has **one month or thirty (30) days** from the mail date of this notice, whichever is longer, to file a request for reconsideration of this PTA calculation. See 35 U.S.C. § 154(b)(3)(B)(ii) and 37 CFR 1.322(a)(4).

Patentee should use document code PET.OP if electronically filing a request for reconsideration of this PTA calculation. The patentee must also include the information required by 37 CFR 1.705(b)(2), and the fee required by 37 CFR 1.18(e). If patentee does not file a timely request for reconsideration of this PTA calculation, including the information required by 37 CFR 1.705(b)(2) and the fee required by 37 CFR 1.18(e), the USPTO will issue a certificate of correction reflecting the PTA determination noted above.

Patentee should be aware that in order to preserve the right of review of the USPTO's PTA determination in the United States District Court for the District of Columbia, patentee must ensure that the steps required under 35 U.S.C. § 154 (b)(4) are taken in a timely manner. Nothing in the request for recalculation should be construed as providing an alternative time frame for commencing a civil action under 35 U.S.C. § 154(b)(4).

UNITED STATES PATENT AND TRADEMARK OFFICE

Commissioner for Patents
United States Patent and Trademark Office
P.O. Box 1450
Alexandria, VA 22313-1450
www.uspto.gov

GREENBLUM & BERNSTEIN, P.L.C.
1950 ROLAND CLARKE PLACE
RESTON VA 20191

COPY MAILED
MAY 19 2006
OFFICE OF PETITIONS

In re Application of :
Kim, et al. :
Application No. 11/144,616 : ON PETITION
Filed: June 6, 2005 :
Attorney Docket No. P27999.A01 :
For: SUSPENSION APPARATUS AND RESONANCE AVOIDING METHOD OF DRUM-TYPE WASHING MACHINE

This is a decision on the petition under 37 CFR 1.181, filed March 27, 2006, to withdraw the holding of abandonment of the above-identified application.

The petition under 37 CFR 1.181 is **granted**.

This application was held abandoned for failure to respond in a timely manner to the Notice to File Missing Parts of Nonprovisional Application, mailed on June 30, 2005, which set an extendable two month period for reply. The Office has no record of receiving an extension of time or a reply to the June 30, 2005 Notice in application no. 11/144,616. Therefore, the Office considered the application abandoned on August 31, 2005. A Notice of Abandonment was mailed on March 16, 2006.

Petitioners assert that a proper response in the form of an executed declaration and surcharge was timely filed on August 16, 2005. Petitioners explain that through inadvertent error, petitioners listed the application number as 11/114,616 on the cover letter for the executed declaration, surcharge, and certified copy of a priority document. Therefore, the items filed on August 16, 2005 were not associated with application no. 11/114,616's file.

A review of the copy of cover letter confirms that petitioners cited application no. 11/114,616. A review of the contents of application no. 11/114,616 reveals that the August 16, 2005 correspondence is present.

Even though petitioners cited the wrong application number on the cover letter, under MPEP 502, " A minor error in the identification of the application can be corrected by the group provided the correct identification can be quickly discovered. Examples of minor errors are transposed numbers, typographical errors, and listing the parent application number." The undersigned believes that a relatively simple review of Office records would have yielded the correct application number to enable the Office to match the August 16, 2005 correspondence

with this application file. A cross-referencing of any of the accurate identifiers found on the cover letter with Office databases would have revealed the typographical error.

The undersigned will request that the August 16, 2005 correspondence be removed from the file of application no. 11/114,616 and placed in the file of the above-identified application.

The August 16, 2005 executed declaration and surcharge were timely filed. Accordingly, the petition is **GRANTED**, the Notice of Abandonment is hereby vacated, and the holding of abandonment withdrawn.

The application file will be forwarded to the Office of Initial Patent Examination for further processing.

Telephone inquiries pertaining to this matter may be directed to the undersigned at (571) 272-3230.

E. Shirene Willis

E. Shirene Willis
Senior Petitions Attorney
Office of Petitions
Office of the Deputy Commissioner
for Patent Examination Policy

UNITED STATES PATENT AND TRADEMARK OFFICE

Commissioner for Patents
United States Patent and Trademark Office
P.O. Box 1450
Alexandria, VA 22313-1450
www.uspto.gov

HDSL
4331 STEVENS BATTLE LANE
FAIRFAX, VA 22033

COPY MAILED

SEP 14 2005

OFFICE OF PETITIONS

In re Application of :
Liu, et al. :
Application No. 11/144,677 :
Filed: June 6, 2005 :
Attorney Docket No. PB040751 :

ON PETITION

This is a decision on papers styled, "Petition To Supply Omitted Item(s)" filed on September 2, 2005, which is being treated as a petition under 37 CFR 1.53, requesting that the above-identified application be accorded a filing date of June 6, 2005, including Figure 7 described in the specification.

The application was submitted on June 6, 2005. However, on July 5, 2005, the Office of Initial Patent Examination (OIPE) mailed a "Notice of Omitted Items in a Nonprovisional Application" (Notice) that stated the application had been accorded a filing date, and that Figure 7 described in the specification appears to have been omitted.

In response, on September 2, 2005, the instant petition was submitted. Petitioner states, in pertinent part:

> "When we filed the application on the behavior of the Taiwan inventors, which claimed Taiwan patent application 931401455 filed on Dec. 24, 2004, due to a clerk's error, he misplaced the page of figure 7 so that figure 7 was missed from the original filing package. However, the specification of this application clearly specifies that figure 7 is an integrated part of the application and we did submit figures 1-6 (total 7 figures in this application), and the submitted priority document of Taiwan patent application has includes all drawings of figure 1-7."

It appears that petitioner wishes to add the omitted drawing by way of the foreign priority document submitted on June 6, 2005. A petition, however, is not required for such action.

See 37 CFR 1.57, effective November 22, 2004:

"37 CFR § 1.57, Incorporation by reference.

> (a) Subject to the conditions and requirements of this paragraph, if all or a portion of the specification or drawing(s) is inadvertently omitted from an application, but the application contains a claim under § 1.55 for priority of a prior-filed foreign application, or a claim under § 1.78 for the benefit of a prior-filed provisional, nonprovisional, or international application, that was present on the filing date of the application, and the inadvertently omitted portion of the specification or drawing(s) is completely contained in the prior-filed application, the claim under § 1.55 or § 1.78 shall also be considered an incorporation by reference of the prior-filed application as to the inadvertently omitted portion of the specification or drawing(s).
>
> > (1) The application must be amended to include the inadvertently omitted portion of the specification or drawing(s) within any time period set by the Office, but in no case later than the close of prosecution as defined by § 1.114(b), or abandonment of the application, whichever occurs earlier. The applicant is also required to:
> >
> > > (i) Supply a copy of the prior-filed application, except where the prior-filed application is an application filed under 35 U.S.C. 111;
> > >
> > > (ii) Supply an English language translation of any prior-filed application that is in a language other than English; and
> > >
> > > (iii) Identify where the inadvertently omitted portion of the specification or drawings can be found in the prior-filed application."

If applicants' desire that Figure 7 described in the specification be added to the application, the appropriate procedure is by way of amendment requesting the entry of the Figure (*see* 37 CFR 1.57, above). Any such amendment should be filed prior to the first action on the merits and will be considered by the primary examiner.

Accordingly, the petition is <u>dismissed</u>.

Please note, the petition fee will not be refunded, since the petition was not necessitated by any error on the part of the USPTO.

The application will be forwarded to the Office of Initial Patent Examination for further processing using only the application papers originally submitted on June 6, 2005.

Telephone inquiries should be directed to the undersigned at (571) 272-3228.

Edward J. Tannouse
Petitions Attorney
Office of Petitions
Office of the Deputy Commissioner
for Patent Examination Policy

OIPE IAP13
SEP 02 2005
PATENT & TRADEMARK OFFICE

IPW

PATENT

IN THE UNITED STATES PATENT AND TRADEMARK OFFICE

In the PATENT APPLICATION of:		
	Ping-Chun Liu	Our File: PB040751
Application No.:	11/144,677	Date: September 2, 2005
Filed:	June 6, 2005	
For:	Anode Layer Particle Beam Device	
Group:		
Examiner:		

PETITION TO SUPPLY THE OMITTED ITEM (S)

Commissioner for Patents
P.O. Box 1450
Alexandria, VA 22313-1450

Dear Sir:

This petition is for U.S. patent application no. 11/144,677 filed on June 6, 2005. Recently, We received an Omitted Item Notice with the filing receipt from your office regarding to the above-referenced patent application. The notice informed us that figure 7 is "omitted"; therefore, we have to submit the missing page with $400 fee.

As 37 CFR 1.53(c) specifies that the omitted part is "when an application is filed without the specification, drawing or name, or names ....", by definition, the omitted part is designated to the whole "specification" section or the whole "drawing" section that is omitted from the filing application. It should not be applied to this case. When we filed the application on the behavior of the Taiwan inventors, which claimed Taiwan patent application 931401455 filed on Dec. 24, 2004, due to a clerk's error, he misplaced the page of figure 7 so that figure 7 was missed from the original filing package. However,

09/14/2005 AKELLEY 00000006 503303 11144677
01 FC:1462 400.00 DA

UNITED STATES PATENT AND TRADEMARK OFFICE

Commissioner for Patents
United States Patent and Trademark Office
P.O. Box 1450
Alexandria, VA 22313-1450
www.uspto.gov

MORRISON & FOERSTER LLP
1650 TYSONS BOULEVARD
SUITE 400
MCLEAN VA 22102

COPY MAILED

JUN 13 2007

OFFICE OF PETITIONS

In re Application of	:	
DUBIN, Valey M. et al.	:	
Application No. 11/144,679	:	DECISION ON PETITION
Filed: June 06, 2005	:	TO WITHDRAW
Attorney Docket No. **070702000200**	:	FROM RECORD
	:	

This is a decision on the Request to Withdraw as attorney or agent of record under 37 C.F.R. § 1.36(b), filed March 13, 2007 and April 02, 2007.

The request is **NOT APPROVED** as moot.

A review of the file record indicates that the power of attorney to Morrison & Foerster LLP has been revoked by the assignee of the patent application on April 13, 2007. Accordingly, the request to withdraw under 37 C.F.R. § 1.36(b) is moot.

All future communications from the Office will continue to be directed to the below-listed address until otherwise notified by applicant.

Telephone inquires concerning this decision should be directed to Mi Michelle R. Eason at 571-272- 4231.

Terri Williams

Terri Williams
Petitions Examiner
Office of Petitions

cc: **DARBY & DARBY P.C.**
P.O. BOX 770
CHURCH STREET STATION
NEW YORK, NY 10008-0770

UNITED STATES PATENT AND TRADEMARK OFFICE

UNITED STATES DEPARTMENT OF COMMERCE
United States Patent and Trademark Office
Address: COMMISSIONER FOR PATENTS
P.O. Box 1450
Alexandria, Virginia 22313-1450
www.uspto.gov

APPLICATION NUMBER	FILING OR 371 (c) DATE	FIRST NAMED APPLICANT	ATTY. DOCKET NO./TITLE
11/144,679	06/06/2005	Valery M. Dubin	070702000200

CONFIRMATION NO. 3462

OC000000024240723

7278
DARBY & DARBY P.C.
P.O. BOX 770
Church Street Station
New York, NY 10008-0770

Date Mailed: 06/06/2007

NOTICE OF ACCEPTANCE OF POWER OF ATTORNEY

This is in response to the Power of Attorney filed 04/13/2007.

The Power of Attorney in this application is accepted. Correspondence in this application will be mailed to the above address as provided by 37 CFR 1.33.

Michelle R. Eason

Office of Initial Patent Examination (571) 272-4000, or 1-800-PTO-9199
OFFICE COPY

UNITED STATES PATENT AND TRADEMARK OFFICE

UNITED STATES DEPARTMENT OF COMMERCE
United States Patent and Trademark Office
Address: COMMISSIONER FOR PATENTS
P.O. Box 1450
Alexandria, Virginia 22313-1450
www.uspto.gov

APPLICATION NUMBER	FILING OR 371 (c) DATE	FIRST NAMED APPLICANT	ATTY. DOCKET NO./TITLE
11/144,679	06/06/2005	Valery M. Dubin	070702000200

CONFIRMATION NO. 3462

OC000000024240711

25227
MORRISON & FOERSTER LLP
1650 TYSONS BOULEVARD
SUITE 400
MCLEAN, VA 22102

Date Mailed: 06/06/2007

NOTICE REGARDING CHANGE OF POWER OF ATTORNEY

This is in response to the Power of Attorney filed 04/13/2007.

- The Power of Attorney to you in this application has been revoked by the assignee who has intervened as provided by 37 CFR 3.71. Future correspondence will be mailed to the new address of record(37 CFR 1.33).

Michelle R. Soeson

Office of Initial Patent Examination (571) 272-4000, or 1-800-PTO-9199
OFFICE COPY

UNITED STATES PATENT AND TRADEMARK OFFICE

Commissioner for Patents
United States Patent and Trademark Office
P.O. Box 1450
Alexandria, VA 22313-1450
www.uspto.gov

BERNARD MALINA ESQ
MALINA & ASSOCIATES PC
60 EAST 42ND ST
SUITE 501
NEW YORK NY 10165

COPY MAILED
MAY 0 1 2006
OFFICE OF PETITIONS

In re Application of	:	
Fox, et al.	:	
Application No. 11/144,704	:	ON PETITION
Filed: June 6, 2005	:	
Attorney Docket No. CD-115	:	

This is a decision on the petition under 37 CFR 1.137(b), filed March 20, 2006.

The petition is **GRANTED**.

The above-identified application became abandoned for failure to timely file a reply to the Notice to File Corrected Application Papers, mailed July 5, 2005, which set an extendable period for reply of two months for applicant to file replacement drawings. No extensions of time under the provisions of 37 CFR 1.136(a) were obtained. Accordingly, no reply to the Notice to File Corrected Application Papers having been received, the above-identified application became abandoned on September 6, 2005. A Notice of Abandonment was mailed on March 16, 2006.

With the instant petition, petitioner paid the petition fee, made the proper statement of unintentional delay, and submitted the required reply in the form of replacement drawings.

The application file is being forwarded to the Office of Initial Patent Examination for pre-examination processing.

Telephone inquiries regarding this decision should be directed to the undersigned at (571)272-3207.

Cliff Congo
Petitions Attorney
Office of Petitions

UNITED STATES PATENT AND TRADEMARK OFFICE

COMMISSIONER FOR PATENTS
UNITED STATES PATENT AND TRADEMARK OFFICE
P.O. BOX 1450
ALEXANDRIA, VA 22313-1450
www.uspto.gov

CHARLES F. MERONI, JR.
P.O. BOX 309
BARRINGTON, IL 60011

COPY MAILED

DEC 0 5 2005

OFFICE OF PETITIONS

In re Application of	:	
Herman A. Bellagamba et al	:	
Application No. 11/144,714	:	DECISION ON PETITION
Filed: June 4, 2005	:	TO MAKE SPECIAL UNDER
Attorney Docket No. 05112	:	37 CFR 1.102(c)(1)
	:	

This is a decision on the petition under 37 CFR 1.102(c)(1), filed June 4, 2005, to make the above-identified application special based on applicant's age as set forth in M.P.E.P. § 708.02, Section IV.

The petition is **GRANTED**.

A grantable petition to make an application special under 37 CFR 1.102(c)(1) and MPEP § 708.02, Section IV: Applicant's Age must be accompanied by evidence showing that at least one of the applicants is 65 years of age, or more, such as a birth certificate or a statement by applicant. No fee is required

The instant petition includes a statement from Inventor Herman A. Bellagamba stating that he is over 65 years of age. Accordingly, the above-identified application has been accorded "special" status.

Telephone inquiries concerning this decision should be directed to Irvin Dingle at 571-272-3210.

All other inquiries concerning either the examination or status of the application should be directed to the Technology Center.

The application is being forwarded to the Technology Center Art Unit 2624 for action on the merits commensurate with this decision.

Denise Pothier for
Petitions Examiner
Office of Petitions

UNITED STATES PATENT AND TRADEMARK OFFICE

Commissioner for Patents
United States Patent and Trademark Office
P.O. Box 1450
Alexandria, VA 22313-1450
www.uspto.gov

MAGINOT, MOORE & BECK, LLP
CHASE TOWER
111 MONUMENT CIRCLE
SUITE 3250
INDIANAPOLIS IN 46204

MAILED

MAY 13 2010

OFFICE OF PETITIONS

In re Application of	:	
William Mickle	:	
Application No. 11/144,750	:	ON PETITION
Filed: June 6, 2005	:	
Attorney Docket 2055-0006	:	

This is a decision on the petition under 37 CFR 1.182, filed February 17, 2010, to change the name of one of the inventors.

The petition is **GRANTED**.

The name of the inventor has been changed from **Bill Mickle** to **William K. Mickle**.

The application file is being referred to the Office of Data Managment for further processing.

Telephone inquiries regarding this decision may be directed to Kimberly Inabinet (571) 272-4618.

Carl Friedman
Petitions Examiner
Office of Petitions

UNITED STATES PATENT AND TRADEMARK OFFICE

UNITED STATES DEPARTMENT OF COMMERCE
United States Patent and Trademark Office
Address: COMMISSIONER FOR PATENTS
P.O. Box 1450
Alexandria, Virginia 22313-1450
www.uspto.gov

APPLICATION NUMBER	FILING or 371(c) DATE	GRP ART UNIT	FIL FEE REC'D	ATTY.DOCKET.NO	TOT CLAIMS	IND CLAIMS
11/144,750	06/06/2005	3765	800	2055-0006	17	2

CONFIRMATION NO. 2318

CORRECTED FILING RECEIPT

OC000000041594645

28078
MAGINOT, MOORE & BECK, LLP
CHASE TOWER
111 MONUMENT CIRCLE
SUITE 3250
INDIANAPOLIS, IN 46204

Date Mailed: 05/12/2010

Receipt is acknowledged of this non-provisional patent application. The application will be taken up for examination in due course. Applicant will be notified as to the results of the examination. Any correspondence concerning the application must include the following identification information: the U.S. APPLICATION NUMBER, FILING DATE, NAME OF APPLICANT, and TITLE OF INVENTION. Fees transmitted by check or draft are subject to collection. Please verify the accuracy of the data presented on this receipt. **If an error is noted on this Filing Receipt, please submit a written request for a Filing Receipt Correction. Please provide a copy of this Filing Receipt with the changes noted thereon. If you received a "Notice to File Missing Parts" for this application, please submit any corrections to this Filing Receipt with your reply to the Notice. When the USPTO processes the reply to the Notice, the USPTO will generate another Filing Receipt incorporating the requested corrections**

Applicant(s)
William K. Mickle, Baltimore, MD;

Assignment For Published Patent Application
UNDER ARMOUR, INC.

Power of Attorney: The patent practitioners associated with Customer Number 28078

Domestic Priority data as claimed by applicant

Foreign Applications

If Required, Foreign Filing License Granted: 07/05/2005

The country code and number of your priority application, to be used for filing abroad under the Paris Convention, is **US 11/144,750**

Projected Publication Date: Not Applicable

Non-Publication Request: No

Early Publication Request: No
**** SMALL ENTITY ****

Title

GARMENT HAVING IMPROVED CONTACT AREAS

Preliminary Class

002

PROTECTING YOUR INVENTION OUTSIDE THE UNITED STATES

Since the rights granted by a U.S. patent extend only throughout the territory of the United States and have no effect in a foreign country, an inventor who wishes patent protection in another country must apply for a patent in a specific country or in regional patent offices. Applicants may wish to consider the filing of an international application under the Patent Cooperation Treaty (PCT). An international (PCT) application generally has the same effect as a regular national patent application in each PCT-member country. The PCT process **simplifies** the filing of patent applications on the same invention in member countries, but **does not result** in a grant of "an international patent" and does not eliminate the need of applicants to file additional documents and fees in countries where patent protection is desired.

Almost every country has its own patent law, and a person desiring a patent in a particular country must make an application for patent in that country in accordance with its particular laws. Since the laws of many countries differ in various respects from the patent law of the United States, applicants are advised to seek guidance from specific foreign countries to ensure that patent rights are not lost prematurely.

Applicants also are advised that in the case of inventions made in the United States, the Director of the USPTO must issue a license before applicants can apply for a patent in a foreign country. The filing of a U.S. patent application serves as a request for a foreign filing license. The application's filing receipt contains further information and guidance as to the status of applicant's license for foreign filing.

Applicants may wish to consult the USPTO booklet, "General Information Concerning Patents" (specifically, the section entitled "Treaties and Foreign Patents") for more information on timeframes and deadlines for filing foreign patent applications. The guide is available either by contacting the USPTO Contact Center at 800-786-9199, or it can be viewed on the USPTO website at http://www.uspto.gov/web/offices/pac/doc/general/index.html.

For information on preventing theft of your intellectual property (patents, trademarks and copyrights), you may wish to consult the U.S. Government website, http://www.stopfakes.gov. Part of a Department of Commerce initiative, this website includes self-help "toolkits" giving innovators guidance on how to protect intellectual property in specific countries such as China, Korea and Mexico. For questions regarding patent enforcement issues, applicants may call the U.S. Government hotline at 1-866-999-HALT (1-866-999-4158).

LICENSE FOR FOREIGN FILING UNDER

Title 35, United States Code, Section 184

Title 37, Code of Federal Regulations, 5.11 & 5.15

GRANTED

The applicant has been granted a license under 35 U.S.C. 184, if the phrase "IF REQUIRED, FOREIGN FILING LICENSE GRANTED" followed by a date appears on this form. Such licenses are issued in all applications where the conditions for issuance of a license have been met, regardless of whether or not a license may be required as

set forth in 37 CFR 5.15. The scope and limitations of this license are set forth in 37 CFR 5.15(a) unless an earlier license has been issued under 37 CFR 5.15(b). The license is subject to revocation upon written notification. The date indicated is the effective date of the license, unless an earlier license of similar scope has been granted under 37 CFR 5.13 or 5.14.

This license is to be retained by the licensee and may be used at any time on or after the effective date thereof unless it is revoked. This license is automatically transferred to any related applications(s) filed under 37 CFR 1.53(d). This license is not retroactive.

The grant of a license does not in any way lessen the responsibility of a licensee for the security of the subject matter as imposed by any Government contract or the provisions of existing laws relating to espionage and the national security or the export of technical data. Licensees should apprise themselves of current regulations especially with respect to certain countries, of other agencies, particularly the Office of Defense Trade Controls, Department of State (with respect to Arms, Munitions and Implements of War (22 CFR 121-128)); the Bureau of Industry and Security, Department of Commerce (15 CFR parts 730-774); the Office of Foreign AssetsControl, Department of Treasury (31 CFR Parts 500+) and the Department of Energy.

NOT GRANTED

No license under 35 U.S.C. 184 has been granted at this time, if the phrase "IF REQUIRED, FOREIGN FILING LICENSE GRANTED" DOES NOT appear on this form. Applicant may still petition for a license under 37 CFR 5.12, if a license is desired before the expiration of 6 months from the filing date of the application. If 6 months has lapsed from the filing date of this application and the licensee has not received any indication of a secrecy order under 35 U.S.C. 181, the licensee may foreign file the application pursuant to 37 CFR 5.15(b).

UNITED STATES PATENT AND TRADEMARK OFFICE

COMMISSIONER FOR PATENTS
UNITED STATES PATENT AND TRADEMARK OFFICE
P.O. BOX 1450
ALEXANDRIA, VA 22313-1450
www.uspto.gov

June E. Cohan
PILLSBURY WINTHROP SHAW PITTMAN LLP
1650 Tysons Boulevard
McLean, VA 22102

COPY MAILED

OCT 0 3 2005

OFFICE OF PETITIONS

In re Application of	:	
Feinroth and Hao	:	
Application No. 11/144,786	:	DECISION GRANTING
Filed: June 6, 2005	:	STATUS UNDER
Attorney Docket Number: GEC-101-US	:	

This decision is in response to the Petition Under 37 CFR 1.47(a), filed June 24, 2005, to allow the other inventor(s) to proceed with the application on behalf of himself or herself and the nonsigning inventor(s).

The petition is **granted**.

The above-identified application and papers have been reviewed and found in compliance with 37 CFR 1.47(a). This application is hereby accorded Rule 1.47(a) status.

Petitioner has shown that the non-signing inventor, Bernard R. Hao, refuses to join in the application.

As provided in Rule 1.47(a), this Office will forward notice of this application's filing to the non-signing inventor at the addresses given in the Petition. Notice of the filing of this application will also be published in the Official Gazette.

The application file is being returned to the Office of Initial Patent Examination for continued processing.

Telephone inquiries related to this decision may be directed to the undersigned at (571) 272-3232.

Derek L. Woods
Attorney
Office of Petitions

UNITED STATES PATENT AND TRADEMARK OFFICE

COMMISSIONER FOR PATENTS
UNITED STATES PATENT AND TRADEMARK OFFICE
P.O. BOX 1450
ALEXANDRIA, VA 22313-1450
www.uspto.gov

BERNARD R. HAO
10913 HAMPTON ROAD
FAIRFAX STATION, VA 22039

COPY MAILED

OCT 0 3 2005

OFFICE OF PETITIONS

In re Application of :
Feinroth and Hao :
Application No. 11/144,786 : LETTER
Filed: June 6, 2005 :
Attorney Docket Number: GEC-101-US :

Dear Mr. Hao:

You are named as a joint inventor in the above-identified United States patent application filed under the provisions of 35 U.S.C. 116 (United States Code) and 37 CFR 1.47(a), Rules of Practice in Patent Cases. Should a patent be granted on the application you will be designated therein as a joint inventor.

As a named inventor you are entitled to inspect any paper in the file wrapper of the application, order copies of all or any part thereof (at a prepaid cost per 37 CFR 1.19) or make your position of record in the application. Alternatively, you may arrange to do any of the preceding through a registered patent attorney or agent presenting written authorization from you. If you care to join the application, counsel of record (see below) would presumably assist you. Joining in the application would entail the filing of an appropriate oath or declaration by you pursuant to 37 CFR 1.63.

Telephone inquiries regarding this communication should be directed to the undersigned at (571) 272-3232. Requests for information regarding your application should be directed to the File Information Unit at (703) 308-2733. Information regarding how to pay for and order a copy of the application, or a specific paper in the application, should be directed to Certification Division at (703) 308-9726 or 1-800-972-6382 (outside the Washington D.C. area).

Derek L. Woods
Attorney Advisor
Office of Petitions

cc: June E. Cohan
PILLSBURY WINTHROP SHAW PITTMAN LLP
1650 Tysons Boulevard
McLean, VA 22102

UNITED STATES PATENT AND TRADEMARK OFFICE

Commissioner for Patents
United States Patent and Trademark Office
P.O. Box 1450
Alexandria, VA 22313-1450
www.uspto.gov

WILLIAM J. MASON
MACCORD MASON PLLC
POST OFFICE BOX 1489
WRIGHTSVILLE BEACH NC 28480

COPY MAILED

NOV 0 6 2008

OFFICE OF PETITIONS

In re Application of:	:	
Feinroth et al.	:	
Application No. 11/144786	:	DECISION DISMISSING
Filing or 371(c) Date: 06/06/2005	:	PETITION UNDER
Attorney Docket Number: 5890-001	:	37 CFR 1.47(a)

This is in response to a petition under 37 CFR 1.47(a), filed September 24, 2008. The petition is a copy of a petition filed June 24, 2005, and granted in a Decision mailed October 3, 2005. The petition includes a copy of the Decision mailed October 3, 2005.

The petition is **dismissed as moot**.

In view of the Decision mailed October 3, 2005, rule 47 status has been accorded the application and a petition to accord rule 47 status is moot.

No fee has been charged for the petition.

The application file does not indicate a change of address has been filed in this case, although the address given on the petition differs from the address of record. A change of address should be filed in this case in accordance with MPEP 601.03. A courtesy copy of this decision is being mailed to the address noted on the petition. However, until otherwise instructed, all future correspondence regarding this application will be mailed solely to the address of record.

The application is being referred to Technology Center Art Unit 3663 for continued examination in the normal course of business.

Telephone inquiries concerning this matter should be directed to the undersigned at (571) 272-3232.

/Derek L. Woods/
Derek L. Woods
Attorney
Office of Petitions

CC: PILLSBURY WINTHROP SHAW PITTMAN LLP
1650 TYSONS BOULEVARD
McLEAN, VA 22102

UNITED STATES DEPARTMENT OF COMMERCE
COMMISSIONER FOR PATENTS
P. O. BOX 1450
ALEXANDRIA, VA 22313-1450

Date	: 2/13/2009
Patent No.	: 7,416,282 B2
Inventor(s)	: Silverbrook
Issue Date	: August 26, 2008
Title	: **PRINTHEAD HAVING COMMON ACTUATOR FOR INKJET NOZZLES**
Doc./File No.	: **MEMS28US**

Re: Certificate of Correction

Consideration has been given your request for a certificate of correction, for the above-identified patent under the provisions of Rule 1.322 and 1.323.

Respecting the alleged error in your request, With respect to the omitted priority claim, section 201.14(b) of the Manual of Patent Examining Procedures, states that if the certified copy is presented in a parent application on file in the Patent and Trademark Office, it is not necessary to file an addition certified copy. However, it is clear that the Manual statement, in accordance with the statutory requirement, requires the filing of a claim of priority in the continuing application(s). Absent such a claim, statutory requirement have not been met. Therefore, no correction is in order here under Rules 1.322.

In view of the foregoing, your request in this matter is hereby denied.

Further consideration will be given concerning this matter upon receipt of a request for **Reconsideration** (reconsideration should be accompanied by supporting document(s) such as, amendment, postcard receipt, 1449/892, etc.) and should be filed and directed to Decisions & Certificates of Correction Branch.

Ernest C. White, *LIE* (703) 308-9390 x122
Mary F. Diggs, *Supervisor* (703) 308-9390 x125
Decisions & Certificates of Correction Branch

SILVERBROOK RESEARCH PTY LTD
393 DARLING STREET
BALMAIN 2041 AU AUSTRALIA

UNITED STATES PATENT AND TRADEMARK OFFICE

Commissioner for Patents
United States Patent and Trademark Office
P.O. Box 1450
Alexandria, VA 22313-1450
www.uspto.gov

9-27-06

Patent No. : 7,086,724
Inventor(s) : Kia Silverbrook
Issued : August 8, 2006
Title : COMPACT MEDIA AND INK CARTRIDGE FOR INKJET PRINTHEAD
Docket No. : BA114US

Re: Request for Certificate of Correction

Consideration has been given your request for the issuance of a certificate of correction for the above-identified patent under the provisions of 37 CFR 1.322 and/or 1.323.

Assignees' names and addresses (assignment data) printed in a patent are based *solely* on information supplied in the appropriate space for identifying the assignment data, i.e., item 3 of the Fee(s) Transmittal Form PTOL-85B. After payment of the issue fee, correction of assignment data submitted on the PTOL-85B can only be done by Certificate of Correction under 37 CFR 1.323, with a request under 37 CFR 3.81(b).

A request for a patent to be corrected to state the name of the assignee must:

A. state that the assignment was submitted for recordation as set forth in 37 CFR 3.11 before issuance of the patent;
B. include a request for a certificate of correction under 37 CFR 1.323 along with the fee set forth in 37 CFR 1.20(a); and
C. include the processing fee set forth in 37 CFR 1.17(i).

If the request is granted, Certificates of Correction Branch will be notified that a Certificate of Correction may be issued.
See Manual of Patent Examining Procedure, Section 1481.01 (Rev. 3) (Oct. 2005).

Applicant has not included items A and or C above, accordingly, the request for Certificate of Correction to add or change the assignee data is dismissed.
Any request under 37 CFR 3.81(b) should be directed to the following address or facsimile number:

By mail: Mail Stop PETITIONS
Commissioner for Patents
Post Office Box 1450
Alexandria, VA 22313-1450

By hand: Customer Service Window
Mail Stop Petitions
Randolph Building
401 Dulany Street
Alexandria, VA 22314

By fax: 571-273-8300
ATTN: Office of Petitions

If a fee (currently $100) was previously submitted for consideration of a Request for Certificate of Correction, under CFR 1.323, to correct assignment data, no additional fee is required.

In view of the foregoing, your request is hereby denied.

Eva James
For Cecelia Newman
Decisions & Certificates
of Correction Branch
(703) **308-9390 ext. 124** or (703) 305-8309

Kia Silverbrook
Silverbrook Research Pty Ltd
393 Darling Street
Balmain NSW 2041, Australia

ej

UNITED STATES PATENT AND TRADEMARK OFFICE

Commissioner for Patents
United States Patent and Trademark Office
P.O. Box 1450
Alexandria, VA 22313-1450
www.uspto.gov

SILVERBROOK RESEARCH PTY LTD
393 DARLING STREET
BALMAIN 2041 AU AUSTRALIA

COPY MAILED

NOV 19 2008

OFFICE OF PETITIONS

In re Patent No. 7,086,724	:	
Issue Date: August 8, 2006	:	
Application No. 11/144,805	:	ON PETITION
Filed: June 6, 2005	:	
Attorney Docket No. BAL114US	:	

This is a decision on the petition filed November 13, 2006, which is being treated as a request under 37 CFR 3.81(b)[1] to correct the name of the assignee on the front page of the above-identified patent by way of a Certificate of Correction.

The request is **GRANTED**.

Telephone inquiries concerning this decision may be directed to the undersigned at (571) 272-3230. Inquiries regarding the issuance of a certificate of correction should be directed to the Certificate of Correction Branch at (571) 272-4200.

The Certificates of Correction Branch will be notified of this decision granting the petition under 37 CFR 3.81(b) and directing issuance of the requested Certificate of Correction.

Shirene Willis Brantley
Senior Petitions Attorney
Office of Petitions

[1] *See* MPEP 1309, subsection II; and Official Gazette of June 22, 2004.

UNITED STATES PATENT AND TRADEMARK OFFICE

Commissioner for Patents
United States Patent and Trademark Office
P.O. Box 1450
Alexandria, VA 22313-1450
www.uspto.gov

BANNER & WITCOFF
1001 G STREET N W
SUITE 1100
WASHINGTON DC 20001

COPY MAILED

DEC 2 1 2006

OFFICE OF PETITIONS

In re Application of	:	
Craig Howard Miller	:	
Application No. 11/144,834	:	DECISION ON PETITION
Filed: June 6, 2005	:	TO MAKE SPECIAL UNDER
Attorney Docket No. 006801.00001	:	37 CFR 1.102(c)(2)
	:	

This is a decision on the petition under 37 CFR 1.102(c) (2)(ii), filed January 27, 2006, to make the above-identified application special based on the invention materially contributing to the development or conservation of energy resources as set forth in M.P.E.P. § 708.02, Section VI.

The petition is **DISMISSED**.

A grantable petition to make an application special under 37 CFR 1.102(c)(ii) and MPEP § 708.02, Section VI: Energy, must state how the invention materially contributes to (A) the discovery or development of energy resources, or (b) the more efficient utilization and conservation of energy resources. If the disclosure is not clear on its face that the claimed invention materially contributes category (A) or (B), the petition must be accompanied by a statement by the applicant, assignee, or an attorney/agent registered to practice before the Office explaining how the materiality standard is met. Examples of inventions in category (A) would be developments in fossil fuels (natural gas, coal, and petroleum), hydrogen fuel technologies, nuclear energy, solar energy, etc. Category (B) would include inventions relating to the reduction of energy consumption in combustion systems, industrial equipment, household appliances, etc. No fee is required.

The instant invention is directed to an optimized energy management system. That the instant invention involves energy management does not in itself satisfy the materiality standard, i.e., the instant petition fails to explain how the instant invention contributes in a significant, substantial or noticeable manner to conservation of energy. Accordingly, it is unclear as to how the claimed invention would materially contribute to category (A) or (B).

Further correspondence with respect to this matter should be addressed as follows:

By Mail: Mail Stop PETITION
Commissioner for Patents
P. O. Box 1450
Alexandria, VA 22313-1450

By hand: U. S. Patent and Trademark Office
Customer Service Window, Mail Stop Petitions
Randolph Building
401 Dulany Street
Alexandria, VA 22314

By FAX: (571) 273-8300

Telephone inquiries concerning this decision should be directed to Ramesh Krishnamurthy at 571-272-4914, or to the undersigned at 571-272-7099.

All other inquiries concerning either the examination or status of the application should be directed to the Technology Center.

The application is being forwarded to the Technology Center Art Unit 2125 for action in its regular turn.

David Bucci
Petitions Examiner
Office of Petitions

UNITED STATES PATENT AND TRADEMARK OFFICE

UNITED STATES DEPARTMENT OF COMMERCE
United States Patent and Trademark Office
Address: COMMISSIONER FOR PATENTS
P.O. Box 1450
Alexandria, Virginia 22313-1450
www.uspto.gov

CRANE NAVAL SURFACE WARFARE CENTER
OFFICE OF COUNSEL
BUILDING 2
300 HIGHWAY 361
CRANE, IN 47552

Mail Date: 04/20/2010

Applicant	: Steven P. D'Arche	: DECISION ON REQUEST FOR
Patent Number	: 7632365	: RECALCULATION of PATENT
Issue Date	: 12/15/2009	: TERM ADJUSTMENT IN VIEW
Appliction No	: 11/144,849	: OF WYETH AND NOTICE OF INTENT TO
Filed	: 06/06/2005	: ISSUE CERTIFICATE OF CORRECTION
		:

The Request for Recalculation is **GRANTED** to the extent indicated.

The patent term adjustment has been determined to be **369** days. The USPTO will *sua sponte* issue a certificate of correction reflecting the amount of PTA days determined by the recalculation.

Prior to the issuance of the certificate of correction, the USPTO will afford patentee an opportunity to be heard and request reconsideration. Accordingly, patentee has **one month or thirty (30) days**, whichever is longer, to file a request for reconsideration of this patent term adjustment calculation. See 35 U.S.C. 154(b)(3)(B)(ii) and 37 CFR 1.322(a)(4). No extensions of time will be granted under 37 CFR 1.136.

Patentee should use document code PET.OP if electronically filing a request for reconsideration of this patent term adjustment calculation. The patentee must also include the information required by 37 CFR 1.705(b)(2) and the fee required by 37 CFR 1.18(e). If patentee does not file a timely request for reconsideration of this patent term adjustment calculation including the information required by 37 CFR 1.705(b)(2) and the fee required by 37 CFR 1.18(e), the USPTO will issue a certificate of correction reflecting the PTA determination noted above.

Patentee should be aware that in order to preserve the right to review in the United States District Court for the District of Columbia of the USPTO patent term adjustment determination, patentee must ensure that he or she also take the steps required under 35 U.S.C. 154(b)(4)(A) in a timely manner. Nothing in the request for recalculation should be construed as providing an alternative time frame for commencing a civil action under 35 U.S.C. 154(b)(4)(A).

Any questions concerning this decision should be directed to the Office of Patent Legal Administration at 571-272-7702.

UNITED STATES PATENT AND TRADEMARK OFFICE

Commissioner for Patents
United States Patent and Trademark Office
P.O. Box 1450
Alexandria, VA 22313-1450
www.uspto.gov

SCHMEISER, OLSEN + WATTS
3 LEAR JET LANE
SUITE 201
LATHAM, NY 12110

COPY MAILED

AUG 3 1 2005

OFFICE OF PETITIONS

In re Application of :
Corliss, et al. :
Application No. 11/144,857 :
Filed: June 3, 2005 :
Attorney Docket No. FIS920050060US2 :

DECISION GRANTING PETITION

This is a decision on the petition filed August 11, 2005, that is responsive to the "Notice of Incomplete Nonprovisional Application" (the "Notice") mailed July 7, 2005.

On June 3, 2005 , the application was deposited.

On July 7, 2005, the Office of Initial Patent Examination mailed the Notice stating that no filing date had been accorded the application because drawings were not found with the original disclosure, but appeared to be required to understand the invention claimed. The Notice allowed a non-extendable period for response of two months from its mailing date. The instant petition was filed on August 11, 2005. Petitioner appears to concede that the drawings did not accompany the original disclosure filed April 25, 2005, but maintains argues that the drawings are not necessary for the understanding of the invention claimed. In the alternative, petitioner filed a copy of the drawings and a declaration to be considered only if the instant petition is not granted. It is noted that the Office of Initial Patent Examination changed the filing date of the application to August 11, 2005, prior to the disposition of this petition.

It has been determined that drawings are not necessary to understand at least one claim within the meaning of the first sentence of 35 USC 113. It has been PTO practice to treat an application that contains at least one process or method claim as an application for which a drawing is not necessary for an understanding of the invention under 35 U.S.C. 113 (first sentence). A review of the record reveals that Claim 1 is a method claim. Therefore, the application is deemed to be an application that does not require drawings for an understanding of the invention claimed. Accordingly, the application, as filed, was entitled to the filing date of June 3, 2005.

The copy of the drawing filed with the instant petition is noted, but will not be made a part of the record. A preliminary amendment requesting entry of the drawing should be filed prior to the first action on the merits.

Deposit account 09-0458 will be refunded $400.00.

The application is being forwarded to the Office of Initial Patent Examination for issuance of a corrected filing receipt and for further processing with a filing date of June 3, 2005.

Any inquiries related to this decision should be directed to the undersigned at (571) 272-3222.

Kenya A. McLaughlin
Petitions Attorney
Office of Petitions

UNITED STATES PATENT AND TRADEMARK OFFICE

Commissioner for Patents
United States Patent and Trademark Office
P.O. Box 1450
Alexandria, VA 22313-1450
www.uspto.gov

COPY MAILED

JAN 1 1 2008

OFFICE OF PETITIONS

DAY PITNEY LLP
7 TIMES SQUARE
NEW YORK, NY 10036-7311

In re Application of	:	
Jun INOUE, et al	:	
Application No. 11/144,859	:	DECISION ON PETITION
Filed: June 3, 2005	:	TO WITHDRAW
Attorney Docket No. 503094,091169	:	FROM RECORD

This is a decision on the Request to Withdraw as attorney or agent of record under 37 C.F.R. § 1.36(b), filed March 26, 2007.

The request is **DISMISSED** as moot.

A review of the file record indicates that the power of attorney given to Day Pitney LLP has been revoked by the assignee of the patent application on September 7, 2007. Accordingly, the request to withdraw under 37 C.F.R. § 1.36(b) is moot.

The correspondence address of record has been changed and the new correspondence address is the address indicated below.

Telephone inquires concerning this decision should be directed to the undersigned at 571-272-6735.

Diane Goodwyn
Petitions Examiner
Office of Petitions

cc: OLIFF & BERRIDGE, PLC
P.O. BOX 320850
ALEXANDRIA, VA 22320-4850

cc: MR. MITSUO MATSUI
NISHISHINBASHI YS BUILDING, 3F
19-2, NISHISHINBASHI 2-CHOME
MINATO-KU, TOKYO
JAPAN

UNITED STATES PATENT AND TRADEMARK OFFICE

UNITED STATES DEPARTMENT OF COMMERCE
United States Patent and Trademark Office
Address: COMMISSIONER FOR PATENTS
P.O. Box 1450
Alexandria, Virginia 22313-1450
www.uspto.gov

APPLICATION NUMBER	FILING OR 371(C) DATE	FIRST NAMED APPLICANT	ATTY. DOCKET NO./TITLE
11/144,859	06/03/2005	Jun Inoue	503094.091169

CONFIRMATION NO. 3895

POA ACCEPTANCE LETTER

25944
OLIFF & BERRIDGE, PLC
P.O. BOX 320850
ALEXANDRIA, VA 22320-4850

OC000000027662761

Date Mailed: 01/11/2008

NOTICE OF ACCEPTANCE OF POWER OF ATTORNEY

This is in response to the Power of Attorney filed 09/07/2007.

The Power of Attorney in this application is accepted. Correspondence in this application will be mailed to the above address as provided by 37 CFR 1.33.

/dcgoodwyn/

Office of Initial Patent Examination (571) 272-4000 or 1-800-PTO-9199

UNITED STATES PATENT AND TRADEMARK OFFICE

UNITED STATES DEPARTMENT OF COMMERCE
United States Patent and Trademark Office
Address: COMMISSIONER FOR PATENTS
P.O. Box 1450
Alexandria, Virginia 22313-1450
www.uspto.gov

APPLICATION NUMBER	FILING OR 371(C) DATE	FIRST NAMED APPLICANT	ATTY. DOCKET NO./TITLE
11/144,859	06/03/2005	Jun Inoue	503094.091169

CONFIRMATION NO. 3895

POWER OF ATTORNEY NOTICE

29540
DAY PITNEY LLP
7 TIMES SQUARE
NEW YORK, NY 10036-7311

OC000000027662759

Date Mailed: 01/11/2008

NOTICE REGARDING CHANGE OF POWER OF ATTORNEY

This is in response to the Power of Attorney filed 09/07/2007.

- The Power of Attorney to you in this application has been revoked by the assignee who has intervened as provided by 37 CFR 3.71. Future correspondence will be mailed to the new address of record(37 CFR 1.33).

/dcgoodwyn/

Office of Initial Patent Examination (571) 272-4000 or 1-800-PTO-9199

UNITED STATES PATENT AND TRADEMARK OFFICE

Commissioner for Patents
United States Patent and Trademark Office
P.O. Box 1450
Alexandria, VA 22313-1450
www.uspto.gov

ALLEN, DYER, DOPPELT, MILBRATH & GILCHRIST P.A.
1401 CITRUS CENTER 255 SOUTH ORANGE AVENUE
P.O. BOX 3791
ORLANDO FL 32802-3791

MAILED

MAY 06 2009

OFFICE OF PETITIONS

In re Application of	:	
Kenneth E. Flick et al.	:	
Application No. 11/144,866	:	NOTICE UNDER 37 CFR. 1.28(c)
Filed: June 03, 2005	:	
Attorney Docket No. **58212**	:	

This is a notice regarding your request for acceptance of a fee deficiency submission under 37 CFR 1.28.

The Office no longer investigates or rejects original or reissue patent under 37 CFR 1.56. **1098 Off. Gaz. Pat. Office 502 (January 3, 1989)**. Therefore, nothing in this Notice is intended to imply that an investigation was done.

Your fee deficiency submission under 37 CFR 1.28 is hereby **ACCEPTED**.

This patent is no longer entitled to small entity status. Accordingly, all future fees paid in this patent must be paid at the large entity rate.

Inquiries related to this communication should be directed to Tredelle Jackson at (571) 272-2783.

Ramesh Krishnamurthy

Ramesh Krishnamurthy
Petitions Examiner
Office of Petitions

IFW

Allen, Dyer, Doppelt,
Milbrath & Gilchrist, P.A.
------ INTELLECTUAL PROPERTY ATTORNEYS ------

255 South Orange Avenue • Suite 1401 • Orlando, FL 32801
Mail to: P. O. Box 3791 • Orlando, FL 32802-3791
tel: 407-841-2330 • fax: 407-841-2343
cregan@addmg.com

RECEIVED
NOV 03 2008
OFFICE OF PETITIONS

FACSIMILE COVER SHEET

TO: United States Patent and Trademark Office; Attention: Sharise

CLIENT NAME/NUMBER: 58212

TELEPHONE:

FAX NO: 571-273-6500

FROM: Shari Lipari

DATE: October 29, 2008

NUMBER OF PAGES (INCLUDING COVER SHEET): 4

COMMENTS/INSTRUCTIONS:

Please find attached the document that was previously sent in April. As you can see the fees were corrected though PAIR still has this patent status as Small Entity.

If you have any questions, please call me at 407-841-2330 x274.

NOTE: The information in this facsimile transmission is intended only for the personal and confidential use of the designated recipient(s) named above. This message may be an attorney-client communication and as such is privileged.

If the reader of this message is not the intended recipient named above, you are notified that you have received this document in error, and any review, dissemination, distribution or copying of this message is strictly prohibited.

If you have received this document in error, please notify this office immediately via telephone, and return the original message to the above address by mail. Thank you.

IF YOU DO NOT RECEIVE ALL OF THE PAGES OR ENCOUNTER DIFFICULTIES IN TRANSMISSION, PLEASE CONTACT THE RECEPTIONIST IMMEDIATELY AT (407) 8412330

2008 APR 25 PM 5:44

IN THE UNITED STATES PATENT AND TRADEMARK OFFICE

RECEIVED
CENTRAL FAX CENTER
APR 22 2008

In re Patent Application of:
FLICK ET AL.

Serial No. 11/144,866
Confirmation No. 2548
Filing Date: June 3, 2005

For: VEHICLE SECURITY SYSTEM RECEIVING ACKNOWLEDGEMENT OF TRANSMITTED VEHICLE SECURITY MESSAGE AND RELATED METHODS

Examiner: C. Chow

Art Unit: 2618

Attorney Docket No. 58212

RECEIVED
APR 30 2008
OFFICE OF PETITIONS

NOTIFICATION OF ERROR IN PAYMENT OF FEES
AS A SMALL ENTITY STATUS PURSUANT TO 37 CFR § 1.28(c)

RECEIVED
NOV 03 2008
OFFICE OF PETITIONS

Commissioner for Patents
P.O. Box 1450
Alexandria, VA 22313-1450

Dear Sir:

Assignee, Omega Patents, L.L.C., hereby notifies the Patent and Trademark Office that when the above referenced application was filed on June 3, 2005, small entity was established in good faith, and fees as a small entity were paid in good faith. Through error the Patent and Trademark Office was not notified of a change in small entity status when the issue fee was paid on April 1, 2008.

Pursuant to 37 C.F.R. § 1.28(c)(2)(ii), the deficiency in the payment of fees is itemized below:

04/28/2008 DALLEN 00000035 11144866
01 FC:1461 720.00 OP

RECEIVED
CENTRAL FAX CENTER
APR 22 2008

RECEIVED
NOV 03 2008
OFFICE OF PETITIONS

RECEIVED
APR 30 2008
OFFICE OF PETITIONS

In re Patent Application of
FLICK ET AL.
Serial No. 11/144,866
Filed: June 3, 2005

TYPE OF FEE	CURRENT FEE AMOUNT FOR NON-SMALL ENTITY	SMALL ENTITY FEE PAID	DATE SMALL ENTITY FEE PAID	FEE DEFICIENCY OWED
Issue Fee	$1,440	$720	4/1/08	$720
TOTAL DEFICIENCY PAYMENT OWED:				$720

Pursuant to 37 C.F.R. § 1.28(d), the payment of the deficiencies as itemized above operates as notification of loss of status and will be treated under § 1.27(g)(2) as a notification of loss of entitlement to small entity status.

The fee deficiency totaling $720.00 is being paid by credit card on EFS-web. If any additional surcharge or process fee is required, authorization is given to charge Deposit Account No. 01-0484.

Respectfully submitted,

CHRISTOPHER F. REGAN
Reg. No. 34,906
Allen, Dyer, Doppelt, Milbrath
& Gilchrist, P.A.
Attorneys of Record

PAGE 2/4 * RCVD AT 4/22/2008 4:52:51 PM [Eastern Daylight Time] * SVR:USPTO-EFXRF-4/18 * DNIS:2738300 * CSID:407 796 5046 * DURATION (mm-ss):01-36

PAGE 3/4 * RCVD AT 10/29/2008 2:58:01 PM [Eastern Daylight Time] * SVR:USPTO-EFXRF-4/21 * DNIS:2736500 * CSID:407 796 5046 * DURATION (mm-ss):02-02

RECEIVED
CENTRAL FAX CENTER
APR 22 2008

CERTIFICATE OF FACSIMILE TRANSMISSION

I HEREBY CERTIFY that the foregoing correspondence has been forwarded via facsimile number 571-273-8300 to the Commissioner for Patents, P.O. Box 1450, Alexandria, VA 22313-1450 this 22nd day of April, 2008.

RECEIVED
NOV 03 2008
OFFICE OF PETITIONS

PART B - FEE(S) TRANSMITTAL

Complete and send this form, together with applicable fee(s), to: Mail Mail Stop ISSUE FEE
Commissioner for Patents
P.O. Box 1450
Alexandria, Virginia 22313-1450
or Fax (571)-273-2885

INSTRUCTIONS: This form should be used for transmitting the ISSUE FEE and PUBLICATION FEE (if required). Blocks 1 through 5 should be completed where appropriate. All further correspondence including the Patent, advance orders and notification of maintenance fees will be mailed to the current correspondence address as indicated unless corrected below or directed otherwise in Block 1, by (a) specifying a new correspondence address; and/or (b) indicating a separate "FEE ADDRESS" for maintenance fee notifications.

CURRENT CORRESPONDENCE ADDRESS (Note: Use Block 1 for any change of address)

27975 7590 03/25/2008

ALLEN, DYER, DOPPELT, MILBRATH & GILCHRIST P.A.
1401 CITRUS CENTER 255 SOUTH ORANGE AVENUE
P.O. BOX 3791
ORLANDO, FL 32802-3791

Note: A certificate of mailing can only be used for domestic mailings of the Fee(s) Transmittal. This certificate cannot be used for any other accompanying papers. Each additional paper, such as an assignment or formal drawing, must have its own certificate of mailing or transmission.

Certificate of Mailing or Transmission

I hereby certify that this Fee(s) Transmittal is being deposited with the United States Postal Service with sufficient postage for first class mail in an envelope addressed to the Mail Stop ISSUE FEE address above, or being facsimile transmitted to the USPTO (571) 273-2885, on the date indicated below.

(Depositor's name)
(Signature)
(Date)

APPLICATION NO.	FILING DATE	FIRST NAMED INVENTOR	ATTORNEY DOCKET NO.	CONFIRMATION NO.
11/144,866	06/03/2005	Kenneth E. Flick	58212	2548

TITLE OF INVENTION: VEHICLE SECURITY SYSTEM RECEIVING ACKNOWLEDGMENT OF TRANSMITTED VEHICLE SECURITY MESSAGE AND RELATED METHODS

APPLN. TYPE	SMALL ENTITY	ISSUE FEE DUE	PUBLICATION FEE DUE	PREV. PAID ISSUE FEE	TOTAL FEE(S) DUE	DATE DUE
nonprovisional	YES	$720	$300	$0	$1020	06/25/2008

EXAMINER	ART UNIT	CLASS-SUBCLASS
CHOW, CHARLES CHIANG	2618	455-575900

1. Change of correspondence address or indication of "Fee Address" (37 CFR 1.363).
- ☐ Change of correspondence address (or Change of Correspondence Address form PTO/SB/122) attached.
- ☐ "Fee Address" indication (or "Fee Address" Indication form PTO/SB/47; Rev 03-02 or more recent) attached. **Use of a Customer Number is required.**

2. For printing on the patent front page, list
(1) the names of up to 3 registered patent attorneys or agents OR, alternatively,
(2) the name of a single firm (having as a member a registered attorney or agent) and the names of up to 2 registered patent attorneys or agents. If no name is listed, no name will be printed.

ALLEN DYER DOPPELT
MILBRATH & GILCHRIST
255 S. Orange Ave. Ste. 1401
P. O. Box 3791
Orlando, FL 32802-3791

3. ASSIGNEE NAME AND RESIDENCE DATA TO BE PRINTED ON THE PATENT (print or type)

PLEASE NOTE: Unless an assignee is identified below, no assignee data will appear on the patent. If an assignee is identified below, the document has been filed for recordation as set forth in 37 CFR 3.11. Completion of this form is NOT a substitute for filing an assignment.

(A) NAME OF ASSIGNEE: **Omega Patents, L.L.C.**

(B) RESIDENCE: (CITY and STATE OR COUNTRY): **Douglasville, Georgia**

Please check the appropriate assignee category or categories (will not be printed on the patent): ☐ Individual ☒ Corporation or other private group entity ☐ Government

4a. The following fee(s) are submitted:
- ☒ Issue Fee
- ☒ Publication Fee (No small entity discount permitted)
- ☐ Advance Order - # of Copies _____

4b. Payment of Fee(s): **(Please first reapply any previously paid issue fee shown above)**
- ☐ A check is enclosed.
- ☒ Payment by credit card. Form PTO-2038 is attached.
- ☒ The Director is hereby authorized to charge the required fee(s), any deficiency, or credit any overpayment, to Deposit Account Number 01-0484 (enclose an extra copy of this form).

5. **Change in Entity Status** (from status indicated above)
- ☐ a. Applicant claims SMALL ENTITY status. See 37 CFR 1.27.
- ☐ b. Applicant is no longer claiming SMALL ENTITY status. See 37 CFR 1.27(g)(2).

NOTE: The Issue Fee and Publication Fee (if required) will not be accepted from anyone other than the applicant; a registered attorney or agent; or the assignee or other party in interest as shown by the records of the United States Patent and Trademark Office.

Authorized Signature _____ Date APRIL 2, 2008

Typed or printed name **Christopher F. Regan** Registration No. **34,906**

This collection of information is required by 37 CFR 1.311. The information is required to obtain or retain a benefit by the public which is to file (and by the USPTO to process) an application. Confidentiality is governed by 35 U.S.C. 122 and 37 CFR 1.14. This collection is estimated to take 12 minutes to complete, including gathering, preparing, and submitting the completed application form to the USPTO. Time will vary depending upon the individual case. Any comments on the amount of time you require to complete this form and/or suggestions for reducing this burden, should be sent to the Chief Information Officer, U.S. Patent and Trademark Office, U.S. Department of Commerce, P.O. Box 1450, Alexandria, Virginia 22313-1450. DO NOT SEND FEES OR COMPLETED FORMS TO THIS ADDRESS. SEND TO: Commissioner for Patents, P.O. Box 1450, Alexandria, Virginia 22313-1450.

Under the Paperwork Reduction Act of 1995, no persons are required to respond to a collection of information unless it displays a valid OMB control number.

UNITED STATES PATENT AND TRADEMARK OFFICE

Commissioner for Patents
United States Patent and Trademark Office
P.O. Box 1450
Alexandria, VA 22313-1450
www.uspto.gov

POTOMAC PATENT GROUP PLLC
P. O. BOX 270
FREDERICKSBURG VA 22404

MAILED

FEB 05 2010

OFFICE OF PETITIONS

In re Patent No. 7,634,793	:	
Issued: December 15, 2009	:	
Application No. 11/144,880	:	ON PETITION
Filed: June 3, 2005	:	
Attorney Docket No: 0320-045	:	

This is a decision regarding your request for acceptance of a fee deficiency submission under 37 CFR 1.28 filed December 10, 2009.

On September 1, 1998, the Court of Appeals for the Federal Circuit held that 37 CFR 1.28(c) is the sole provision governing the time for correction of the erroneous payment of the issue fee as a small entity. See DH Technology v. Synergystex International, Inc.. 154 F.33d 1333, 47 USPQ2d 1865 (Fed. Cir. Sept. 1, 1998).

The Office no longer investigates or rejects original or reissue applications under 37 CFR 1.56. 1098 Off. Gaz. Pat. Office 502 (January 3, 1989). Therefore nothing in this Notice is intended to imply that an investigation was done.

Your fee deficiency submission under 37 CFR 1.28 in the amount of $605.00 is hereby accepted and the petition is **GRANTED**.

Inquiries related to this communication should be directed to the Office of Petitions Staff at (571) 272-3282.

Patricia Faison-Ball

Patricia Faison-Ball
Senior Petitions Attorney
Office of Petitions

UNITED STATES PATENT AND TRADEMARK OFFICE

Commissioner for Patents
United States Patent and Trademark Office
P.O. Box 1450
Alexandria, VA 22313-1450
www.uspto.gov

MAILED

JUN 19 2009

OFFICE OF PETITIONS

TYCO INTERNATIONAL LTD
IP LEGAL DEPARTMENT
ONE TOWN CENTER ROAD
BOCA RATON FL 33486

In re Application of	:	
Shafer, et al.	:	DECISION ON PETITION
Application No. 11/144,883	:	
Filed: June 3, 2005	:	
Attorney Docket No. C4-1243	:	

This is a decision on the petition filed May 18, 2009, pursuant to 37 CFR 1.137(b), to revive the above-identified application.

The petition is **GRANTED**.

The above-identified application became abandoned for failure to timely file an Appeal Brief in response to the "Notice of Panel Decision from Pre-Appeal Brief Review", mailed November 18, 2008. This Notice set an extendable period for reply of one month in which the file an Appeal Brief. No Appeal Brief having been filed, the application became abandoned on December 19, 2008. A Notice of Abandonment was mailed on May 11, 2009

With the instant petition, petitioner paid the petition fee, made the proper statement of unintentional delay, and filed the required reply in the form of an Appeal Brief.

The matter is being forwarded to Group Art Unit 2612 for consideration of the Appeal Brief filed May 18, 2009.

Telephone inquiries regarding this decision should be directed to the undersigned at (571)272-3207.

Cliff Congo
Petitions Attorney
Office of Petitions

UNITED STATES PATENT AND TRADEMARK OFFICE

Commissioner for Patents
United States Patent and Trademark Office
P.O. Box 1450
Alexandria, VA 22313-1450
www.uspto.gov

PATRICK S. YODER
FLETCHER YODER
P.O. BOX 692289
HOUSTON, TX 77269-2289

COPY MAILED

JUL 22 2008

OFFICE OF PETITIONS

In re Application of	:	
Jeffrey R. Thomas, et al.	:	
Application No. 11/144,897	:	DECISION GRANTING PETITION
Filed: June 3, 2005	:	UNDER 37 CFR 1.313(c)(2)
Attorney Docket No. 14414/YOD/VYA	:	

This is a decision on the petition under 37 CFR 1.313(c)(2), filed July 17, 2008, to withdraw the above-identified application from issue after payment of the issue fee.

The petition is **GRANTED**.

The above-identified application is withdrawn from issue for consideration of a submission under 37 CFR 1.114 (request for continued examination). *See* 37 CFR 1.313(c)(2).

Petitioner is advised that the issue fee paid on January 22, 2008 cannot be refunded. If, however, this application is again allowed, petitioner may request that it be applied towards the issue fee required by the new Notice of Allowance.[1]

The petition is not signed by an attorney of record. Nevertheless, in accordance with 37 CFR 1.34, the signature of Mr. Patrick S. Yoder appearing on the correspondence shall constitute a representation to the United States Patent and Trademark Office that he is authorized to represent the particular party on whose behalf he acts. If Mr. Patrick S. Yoder desires to receive future correspondence regarding this file, the appropriate power of attorney documents must be submitted.

This decision also makes reference to the Power of Attorney filed with the application on June 3, 2005. The power of attorney is not accepted because applicant did not comply with 37 CFR 1.32(b).

---

[1] *The request to apply the issue fee to the new Notice may be satisfied by completing and returning the new Part B – Fee(s) Transmittal Form (along with any balance due at the time of submission). Petitioner is advised that the Issue Fee Transmittal Form must be completed and timely submitted to avoid abandonment of the application.*

As a result of a revision of the rules relating to powers of attorney, a power of attorney filed on or after June 25, 2004 must either appoint:

a) One or more joint inventors; OR
b) Those registered practitioners associated with a Customer Number; OR
c) Ten or fewer patent practitioners, either in the power of attorney itself, or by a listing in a separate paper accompanying the power of attorney.

The power of attorney appointed more than ten practitioners, without reference to a Customer Number and without a separate paper indicating which ten practitioners named in the power of attorney are to be recognized, and , as a result, did not comply with 37 CFR 1.32(b). Alternatively, a newly-executed power of attorney in compliance with 37 CFR 1.32(b) may be filed.

Telephone inquiries regarding this decision should be directed to undersigned at (571) 272-1642.

This application is being referred to Technology Center AU 3742 for processing of the request for continued examination under 37 CFR 1.114 and for consideration of the concurrently filed information disclosure statement.

April M. Wise
Petitions Examiner
Office of Petitions

UNITED STATES PATENT AND TRADEMARK OFFICE

Commissioner for Patents
United States Patent and Trademark Office
P.O. Box 1450
Alexandria, VA 22313-1450
www.uspto.gov

COHEN, PONTANI, LIEBERMAN & PAVANE LLP
551 FIFTH AVENUE
SUITE 1210
NEW YORK, NY 10176

COPY MAILED

JAN 21 2009

In re Application of	:	
SOVELL, Gregory E.	:	
Application No. 11/144,900	:	DECISION ON PETITION
Filed: June 03, 2005	:	TO WITHDRAW
Attorney Docket No. **5500-2**	:	FROM RECORD

This is a decision on the Request to Withdraw as attorney or agent of record under 37 C.F.R. § 1.36(b), filed October 31, 2008.

The request is **APPROVED**.

A grantable request to withdraw as attorney/agent of record must be signed by every attorney/agent seeking to withdraw or contain a clear indication that one attorney is signing on behalf of another/others. The Office requires the practitioner(s) requesting withdrawal to certify that he, she, or they have: (1) given reasonable notice to the client, prior to the expiration of the response period, that the practitioner(s) intends to withdraw from employment; (2) delivered to the client or a duly authorized representative of the client all papers and property (including funds) to which the client is entitled; and (3) notified the client of any responses that may be due and the time frame within which the client must respond, pursuant 37 CFR 10.40(c).

The request was signed by Lance J. Lieberman on behalf of all attorneys of record who are associated with customer No. 27799. All attorneys/agents associated have been withdrawn. Applicant is reminded that there is no attorney of record at this time.

All future correspondence will be directed to the first named inventor Gregory E. Sovell at the address indicated below.

There is an outstanding Office action mailed August 21, 2008 that requires a reply from the applicant.

Telephone inquiries concerning this decision should be directed to Michelle R. Eason at 571-272-4231.

Michelle R. Eason
Paralegal Specialist
Office of Petitions

cc: **GREGORY E. SOVELL**
c/o C-IN2 INDUSTRIES
30 EAST 20TH STREET
NEW YORK, NY 10003

UNITED STATES PATENT AND TRADEMARK OFFICE

UNITED STATES DEPARTMENT OF COMMERCE
United States Patent and Trademark Office
Address: COMMISSIONER FOR PATENTS
P.O. Box 1450
Alexandria, Virginia 22313-1450
www.uspto.gov

King & Spalding LLP
P.O. Box 889
Belmont, CA 94002-0889

Mail Date: 04/28/2010

Applicant	: Reiner Laus	: DECISION ON REQUEST FOR
Patent Number	: 7659117	: RECALCULATION of PATENT
Issue Date	: 02/09/2010	: TERM ADJUSTMENT IN VIEW
Application No	: 11/144,912	: OF WYETH AND NOTICE OF INTENT TO
Filed	: 06/03/2005	: ISSUE CERTIFICATE OF CORRECTION
		:

The Request for Recalculation is **GRANTED** to the extent indicated.

The patent term adjustment has been determined to be **822** days. The USPTO will *sua sponte* issue a certificate of correction reflecting the amount of PTA days determined by the recalculation.

Prior to the issuance of the certificate of correction, the USPTO will afford patentee an opportunity to be heard and request reconsideration. Accordingly, patentee has **one month or thirty (30) days**, whichever is longer, to file a request for reconsideration of this patent term adjustment calculation. See 35 U.S.C. 154(b)(3)(B)(ii) and 37 CFR 1.322(a)(4). No extensions of time will be granted under 37 CFR 1.136.

Patentee should use document code PET.OP if electronically filing a request for reconsideration of this patent term adjustment calculation. The patentee must also include the information required by 37 CFR 1.705(b)(2) and the fee required by 37 CFR 1.18(e). If patentee does not file a timely request for reconsideration of this patent term adjustment calculation including the information required by 37 CFR 1.705(b)(2) and the fee required by 37 CFR 1.18(e), the USPTO will issue a certificate of correction reflecting the PTA determination noted above.

Patentee should be aware that in order to preserve the right to review in the United States District Court for the District of Columbia of the USPTO patent term adjustment determination, patentee must ensure that he or she also take the steps required under 35 U.S.C. 154(b)(4)(A) in a timely manner. Nothing in the request for recalculation should be construed as providing an alternative time frame for commencing a civil action under 35 U.S.C. 154(b)(4)(A).

Any questions concerning this decision should be directed to the Office of Patent Legal Administration at 571-272-7702.

UNITED STATES PATENT AND TRADEMARK OFFICE

Commissioner for Patents
United States Patent and Trademark Office
P.O. Box 1450
Alexandria, VA 22313-1450
www.uspto.gov

SCHUBERT OSTERRIERDER &
NICKELSON LLC
AUUSTIN, TX 78749

COPY MAILED

MAY 18 2007

OFFICE OF PETITIONS

In re Application of
Candido ALVARADO
Application No. 11/144,922
Filed: June 3, 2005
Attorney Docket No. ALV.4010.PAT

DECISION ON PETITION
TO WITHDRAW
FROM RECORD

This is a decision on the Request to Withdraw as attorney or agent of record under 37 C.F.R. § 1.36(b), filed October 26, 2006.

The request is **APPROVED**.

A grantable request to withdraw as attorney/agent of record must be signed by every attorney/agent seeking to withdraw or contain a clear indication that one attorney is signing on behalf of another/others. A request to withdraw will not be approved unless at least 30 (thirty) days would remain between the date of approval and the later of the expiration date of a time to file a response or the expiration date of the maximum time period which can be extended under 37 C.F.R. § 1.136(a).

The request was signed by Erik J. Osterrieder on behalf of all attorneys/agents of record.

All attorneys/agents of record have been withdrawn.

Applicant is reminded that there is no attorney of record at this time.

All future communications from the Office will be directed to the first named signing inventor at the first copied address below until otherwise properly notified by the applicant.

There is an outstanding Office action mailed December 1, 2006 that requires a response by the applicant.

Telephone inquiries concerning this decision should be directed to Diane Goodwyn at 571-272-6735.

April Wise
Petitions Examiner
Office of Petitions

cc: CANDIDO ALVARADO
4022 MARLOWE STREET
HOUSTON, TX 77005-1937

UNITED STATES PATENT AND TRADEMARK OFFICE

UNITED STATES DEPARTMENT OF COMMERCE
United States Patent and Trademark Office
Address: COMMISSIONER FOR PATENTS
P.O. Box 1450
Alexandria, Virginia 22313-1450
www.uspto.gov

APPLICATION NUMBER	FILING OR 371 (c) DATE	FIRST NAMED APPLICANT	ATTY. DOCKET NO./TITLE
11/144,922	06/03/2005	Candido Alvarado	ALV.4010.PAT

CONFIRMATION NO. 2011

OC000000023690507

38518
SCHUBERT OSTERRIEDER & NICKELSON PLLC
6013 CANNON MTN DR, S14
AUSTIN, TX 78749

Date Mailed: 05/04/2007

NOTICE REGARDING CHANGE OF POWER OF ATTORNEY

This is in response to the Power of Attorney filed 10/26/2006.

- The withdrawal as attorney in this application has been accepted. Future correspondence will be mailed to the new address of record. 37 CFR 1.33.

Diane Goodlow

Office of Initial Patent Examination (571) 272-4000, or 1-800-PTO-9199

FORMER ATTORNEY/AGENT COPY

UNITED STATES PATENT AND TRADEMARK OFFICE

Commissioner for Patents
United States Patent and Trademark Office
P.O. Box 1450
Alexandria, VA 22313-1450
www.uspto.gov

OIPE IAP76
JUN 0 4 2007
PATENT & TRADEMARK OFFICE

SCHUBERT OSTERRIERDER &
NICKELSON LLC
AUUSTIN, TX 78749

COPY MAILED

MAY 1 8 2007

OFFICE OF PETITIONS

In re Application of
Candido ALVARADO
Application No. 11/144,922
Filed: June 3, 2005
Attorney Docket No. ALV.4010.PAT

DECISION ON PETITION
TO WITHDRAW
FROM RECORD

This is a decision on the Request to Withdraw as attorney or agent of record under 37 C.F.R. § 1.36(b), filed October 26, 2006.

The request is **APPROVED**.

A grantable request to withdraw as attorney/agent of record must be signed by every attorney/agent seeking to withdraw or contain a clear indication that one attorney is signing on behalf of another/others. A request to withdraw will not be approved unless at least 30 (thirty) days would remain between the date of approval and the later of the expiration date of a time to file a response or the expiration date of the maximum time period which can be extended under 37 C.F.R. § 1.136(a).

The request was signed by Erik J. Osterrieder on behalf of all attorneys/agents of record.

All attorneys/agents of record have been withdrawn.

Applicant is reminded that there is no attorney of record at this time.

All future communications from the Office will be directed to the first named signing inventor at the first copied address below until otherwise properly notified by the applicant.

There is an outstanding Office action mailed December 1, 2006 that requires a response by the applicant.

Telephone inquiries concerning this decision should be directed to Diane Goodwyn at 571-272-6735.

April Wise
Petitions Examiner
Office of Petitions

cc: CANDIDO ALVARADO
4022 MARLOWE STREET
HOUSTON, TX 77005-1937

OIPE IAP76
JUN 0 4 2007
PATENT & TRADEMARK OFFICE

UNITED STATES PATENT AND TRADEMARK OFFICE

UNITED STATES DEPARTMENT OF COMMERCE
United States Patent and Trademark Office
Address: COMMISSIONER FOR PATENTS
P.O. Box 1450
Alexandria, Virginia 22313-1450
www.uspto.gov

APPLICATION NUMBER	FILING OR 371 (c) DATE	FIRST NAMED APPLICANT	ATTY. DOCKET NO./TITLE
11/144,922	06/03/2005	Candido Alvarado	ALV.4010.PAT

CONFIRMATION NO. 2011

OC000000023690507

38518
SCHUBERT OSTERRIEDER & NICKELSON PLLC
6013 CANNON MTN DR, S14
AUSTIN, TX 78749

Date Mailed: 05/04/2007

NOTICE REGARDING CHANGE OF POWER OF ATTORNEY

This is in response to the Power of Attorney filed 10/26/2006.

- The withdrawal as attorney in this application has been accepted. Future correspondence will be mailed to the new address of record. 37 CFR 1.33.

Office of Initial Patent Examination (571) 272-4000, or 1-800-PTO-9199
FORMER ATTORNEY/AGENT COPY

UNITED STATES PATENT AND TRADEMARK OFFICE

Commissioner for Patents
United States Patent and Trademark Office
P.O. Box 1450
Alexandria, VA 22313-1450
www.uspto.gov

Nixon Peabody, LLP
401 9th Street, NW
Suite 900
Washington, DC 20004-2128

COPY MAILED

APR 22 2008

OFFICE OF PETITIONS

In re Application of	:	
Vijay Gangadhar Phadke	:	
Application No. 11/144,923	:	DECISION ON PETITION
Filed: June 3, 2005	:	TO WITHDRAW
Attorney Docket No. 9676A-000081/US	:	FROM RECORD
	:	

This is a decision on the Request to Withdraw as attorney or agent of record under 37 C.F.R. § 1.36(b), filed November 20, 2007.

The request is **NOT APPROVED** because it is moot.

A review of the file record indicates that the power of attorney to Nixon Peabody, LLP has been revoked by the assignee of the patent application on December 6, 2007. Accordingly, the request to withdraw under 37 C.F.R. § 1.36(b) is moot.

All future communications from the Office will continue to be directed to the below-listed address until otherwise notified by applicant.

Telephone inquires concerning this decision should be directed to Terri Williams at 571-272-2991.

T. Williams

Terri Williams
Petitions Examiner
Office of Petitions

cc: **Harness, Dickey, & Pierce, P.L.C.**
7700 Bonhomme, Suite 400
St. Louis, MO 63105

UNITED STATES PATENT AND TRADEMARK OFFICE

Commissioner for Patents
United States Patent and Trademark Office
P.O. Box 1450
Alexandria, VA 22313-1450
www.uspto.gov

THOMAS, KAYDEN,
HORSTEMEYER & RISLEY, LLP
600 GALLERIA PARKWAY, S.E.
STE 1500
ATLANTA GA 30339-5994

COPY MAILED

DEC 07 2009

OFFICE OF PETITIONS

In re Application of
Tseng, et al.
Application No. 11/144,939
Filed: 6 June, 2005
Attorney Docket No. 250180-1050

DECISION ON PETITION

This is a decision on the papers that might be suggested as a petition filed on 6 June, 2005 (but not docketed to the Office of Petitions until 5 October, 2009), pursuant to 37 C.F.R. §1.47 (misstated in the filing and the content of the papers as a petition pursuant to 37 C.F.R. §1.47(b), but properly considered pursuant to 37 C.F.R. §1.47(a).

The petition pursuant to 37 C.F.R. §1.47(a) is **DISMISSED**.

Rule 47 applicant is given TWO (2) MONTHS from the mailing date of this decision to reply, correcting the below-noted deficiencies. Any reply should be entitled "Request for Reconsideration of Petition Under 37 C.F.R. §1.47(a)," and should only address the deficiencies noted below, except that the reply may include an oath or declaration executed by the non-signing inventor. **FAILURE TO RESPOND WILL RESULT IN ABANDONMENT OF THE APPLICATION.** Any extensions of time will be governed by 37 C.F.R. §1.136(a).

This is **not** a final agency action within the meaning of 5 U.S.C. §704.

As to the Petition
Pursuant to 37 C.F.R. §1.47

A grantable petition pursuant to 37 C.F.R. §1.47(a) requires: (1) petition and fee; (2) proof that the non-signing inventor cannot be reached or refuses to sign the oath or declaration after having been presented with the application papers (specification: description, claims and drawings); (3) an acceptable oath or declaration in compliance with 35 U.S.C. §§ 115 and 116; and (4) a

statement of the last known address of the non-signing inventor(s)—with diligence in the effort to ascertain the validity of the address set forth as the reasonably believed to be last known/current/valid address.

Petitioner does not seem to have worked through the requirements of the petition, as set forth above, in satisfaction of those requirements. (*See* MPEP §409.03, and §409.03(a), et seq. Petitioners always are reminded that, as to proof that the non-signing inventor cannot be reached or refuses to sign the oath or declaration after having been presented with the application papers (specification: description, claims and drawings): the applicable statute (35 U.S.C.§ 116) requires that a "diligent effort" have been expended in attempting to find or reach the non-signing inventor. *See* MPEP §409.03, and §409.03(a) and (e): "a *bona fide* attempt.")

Because of, *inter alia*, the confusion as to the inventive entity (and the nature of the petition), Petitioner has not satisfied the requirements set forth in the regulations and outlined above: petition, fee, proof that the non-signing inventor cannot be reached or refuses to sign the oath or declaration after having been presented with the application papers (specification: description, claims and drawings); and as yet it is unclear that there is a proper statement of the last known address of the non-signing inventor(s)—with diligence in the effort to ascertain the validity of the address set forth as the reasonably believed to be last known/current/valid address. As to this latter item, since no materials were sent by mail/courier, it is not possible to determine the validity/currency of the stated last known address and/or the reasonableness of the presentation of such.

In particular, the record is wholly unclear from the papers submitted by former Counsel Bruce H. Troxell (Reg. No. 26,592) as to the construct (i.e., the members) of the inventive entity. The oath/declaration indicates Jung-Chen Tseng (TSENG), Sheng-Chao Liu (LIU) and Jian-Shen Yu (JS YU), however, additional papers also filed by former Counsel also suggest the inclusion of (and the Office has so included) as a member of the inventive entity an individual identified as Yih-Sheng Yu (YS YU)—although this possibly may be a confusion and/or typographical error due to the language difference/translation. Moreover, what furthers the confusion is that the oath/declaration submitted includes a copy of a page signed by YS YU on behalf of TSENG (erroneously as though this was a petition pursuant to 37 C.F.R. §1.47(b), rather than pursuant to to 37 C.F.R. §1.47(b)), however, it is unclear if YS YU also is or is not a member of the inventive entity.

These matters *must* be clarified on any renewed petition.

Petitioners always are reminded that for transmission by Email of any document to be accepted by the Office, written acknowledgment of receipt and readability will be required.

BACKGROUND

The record reflects as follows:

The application was deposited on 6 June, 2005, without, *inter alia*, a fully executed oath/declaration

The Office did not mail a Notice of Missing Parts requiring, *inter alia*, a fully executed oath/declaration because the instant petition was filed on deposit of the application.

On 6 June, 2005, former Counsel Bruce H. Troxell (Reg. No. 26,592) submitted, *inter alia*, a papers as discussed above to be associated with a petition (with fee authorized but not then charged and that deposit account is no longer associated with this application, thus, no fee has been paid) pursuant to 37 C.F.R. §1.47 (misstated as §1.47(b)) executed by one identified as YS YU (however, YS YU is not registered to practice before the Office and the many questions suggested by the papers and outlined above and the absence of the petition fee offer substantial initial barriers to the addressing of this matter), with an oath/declaration executed by co-inventors LU and JS YU for themselves and on behalf of non-signing inventor TSENG, with a statement as to the current/valid/reasonably believed to be last known address for TSENG and averment and evidence of transmission of the entire application (description, claims, abstract, drawings) by Nai-Yn Chang (CHANG) to TSENG, however, the lack of clarity to the other items already discussed also suggests a lack of clarity as to matters stated by CHANG.

Thus, Petitioner/former Counsel does not seemed to have worked through the requirements of the petition, as set forth above, in satisfaction of those requirements. (*See* MPEP §409.03, and §409.03(a), et seq. Petitioners always are reminded that, as to proof that the non-signing inventor cannot be reached or refuses to sign the oath or declaration after having been presented with the application papers (specification: description, claims and drawings): the applicable statute (35 U.S.C.§ 116) requires that a "diligent effort" have been expended in attempting to find or reach the non-signing inventor. *See* MPEP §409.03, and §409.03(a) and (e): "a *bona fide* attempt.")

Further, Petitioners always are reminded that for transmission by Email of any document to be accepted by the Office, written acknowledgment of receipt and readability will be required.

As set forth above, any renewed petition **must** clarify these items.

The availability of applications and application papers online to applicants/practitioners who diligently associate their Customer Number with the respective application(s) now provides an applicant/practitioner on-demand information as to events/transactions in an application. Thus, now if one wishes to know the progress in and/or status of an application or the accuracy of the data therein, one need only look at the file online.

Out of an abundance of caution, Petitioners always are reminded that those registered to practice *and* all others who make representations before the Office must inquire into the underlying facts

of representations made to the Office and support averments with the appropriate documentation–since all owe to the Office the continuing duty to disclose.[1]

The instant petition under 37 C.F.R. §1.47(a) is **dismissed**.

Further correspondence with respect to this matter should be addressed as follows:

By mail: Mail Stop PETITIONS
Commissioner for Patents
Post Office Box 1450
Alexandria, VA 22313-1450

By hand: Customer Service Window
Mail Stop Petitions
Randolph Building
401 Dulany Street
Alexandria, VA 22314

By FAX: (571) 273-8300
ATTN: Office of Petitions

While telephone inquiries regarding this decision may be directed to the undersigned at (571) 272-3214, it is noted that all practice before the Office is in writing (see: 37 C.F.R. §1.2[2]) and the proper authority for action on any matter in this regard are the statutes (35 U.S.C.), regulations (37 C.F.R.) and the commentary on policy (MPEP). Therefore, no telephone discussion may be controlling or considered authority for Petitioner's action(s).

/John J. Gillon, Jr./
John J. Gillon, Jr.
Senior Attorney
Office of Petitions

---

[1] See supplement of 17 June, 1999. The Patent and Trademark Office is relying on petitioner's duty of candor and good faith and accepting a statement made by Petitioner. See Changes to Patent Practice and Procedure, 62 Fed. Reg. at 53160 and 53178, 1203 Off. Gaz. Pat. Office at 88 and 103 (responses to comments 64 and 109)(applicant obligated under 37 C.F.R. §10.18 to inquire into the underlying facts and circumstances when providing statements to the Patent and Trademark Office). See specifically, the regulations at 37 C.F.R. §10.18.

[2] The regulations at 37 C.F.R. §1.2 provide:

§1.2 Business to be transacted in writing.
All business with the Patent and Trademark Office should be transacted in writing. The personal attendance of applicants or their attorneys or agents at the Patent and Trademark Office is unnecessary. The action of the Patent and Trademark Office will be based exclusively on the written record in the Office. No attention will be paid to any alleged oral promise, stipulation, or understanding in relation to which there is disagreement or doubt.

UNITED STATES PATENT AND TRADEMARK OFFICE

Commissioner for Patents
United States Patent and Trademark Office
P.O. Box 1450
Alexandria, VA 22313-1450
www.uspto.gov

THOMAS, KAYDEN,
HORSTEMEYER & RISLEY, LLP
600 GALLERIA PARKWAY, S.E.
STE 1500
ATLANTA GA 30339-5994

COPY MAILED
MAR 0 9 2010

In re Application of
Tseng, et al.
Application No. 11/144,939
Filed: 6 June, 2005
Attorney Docket No. 250180-1050

DECISION ON PETITION

This is a decision on the petition filed on 3 February, 2010, pursuant to 37 C.F.R. §1.47

The petition pursuant to 37 C.F.R. §1.47(a) is **DISMISSED**.

As to the Petition
Pursuant to 37 C.F.R. §1.47

A grantable petition pursuant to 37 C.F.R. §1.47(a) requires: (1) petition and fee; (2) proof that the non-signing inventor cannot be reached or refuses to sign the oath or declaration after having been presented with the application papers (specification: description, claims and drawings); (3) an acceptable oath or declaration in compliance with 35 U.S.C. §§ 115 and 116; and (4) a statement of the last known address of the non-signing inventor(s)—with diligence in the effort to ascertain the validity of the address set forth as the reasonably believed to be last known/current/valid address.

Petitioners always are reminded that for transmission by Email of any document to be accepted by the Office, written acknowledgment of receipt and readability will be required.

BACKGROUND

The record reflects as follows:

The application was deposited on 6 June, 2005, without, *inter alia*, a fully executed oath/declaration

The Office did not mail a Notice of Missing Parts requiring, *inter alia*, a fully executed oath/declaration because the instant petition was filed on deposit of the application.

On 6 June, 2005, former Counsel Bruce H. Troxell (Reg. No. 26,592) submitted, *inter alia*, a papers as discussed above to be associated with a petition (with fee authorized but not then charged and that deposit account is no longer associated with this application, thus, no fee was paid) pursuant to 37 C.F.R. §1.47 (misstated as §1.47(b)) executed by one identified as YS YU (however, YS YU is not registered to practice before the Office and the many questions suggested by the papers and outlined above and the absence of the petition fee offer substantial initial barriers to the addressing of this matter), with an oath/declaration executed by co-inventors LU and JS YU for themselves and on behalf of non-signing inventor TSENG, with a statement as to the current/valid/reasonably believed to be last known address for TSENG and averment and evidence of transmission of the entire application (description, claims, abstract, drawings) by Nai-Yn Chang (CHANG) to TSENG, however, the lack of clarity to the other items already discussed also suggests a lack of clarity as to matters stated by CHANG. Thus, Petitioner/former Counsel has not worked through the requirements of the petition, and the petition was dismissed on 7 December, 2009.

On 3 February, 2010, new Counsel/Petitioner Daniel R. McClure (Reg. No. 38,962) set forth a renewed petition and stated therein that the inventive entity was composed of Tseng, Liu and Yu, and that all three inventors, including any previously non-signing inventor, had joined in the oath/declaration, and in support of that averment, Petitioner included a copy of the oath/declaration in compliance with 37 C.F.R. §1.63—and so evidencing joinder.

The availability of applications and application papers online to applicants/practitioners who diligently associate their Customer Number with the respective application(s) now provides an applicant/practitioner on-demand information as to events/transactions in an application. Thus, now if one wishes to know the progress in and/or status of an application or the accuracy of the data therein, one need only look at the file online.

Out of an abundance of caution, Petitioners always are reminded that those registered to practice *and* all others who make representations before the Office must inquire into the underlying facts of representations made to the Office and support averments with the appropriate documentation–since all owe to the Office the continuing duty to disclose.[1]

[1] See supplement of 17 June, 1999. The Patent and Trademark Office is relying on petitioner's duty of candor and good faith and accepting a statement made by Petitioner. See Changes to Patent Practice and Procedure, 62 Fed. Reg. at 53160 and 53178, 1203 Off. Gaz. Pat. Office at 88 and 103 (responses to comments 64 and 109)(applicant obligated under 37 C.F.R. §10.18 to inquire into the underlying facts and circumstances when providing statements to the Patent and Trademark Office). See specifically, the regulations at 37 C.F.R. §10.18.

CONCLUSION

The instant petition under 37 C.F.R. §1.47 is **dismissed as moot**.

In view of the joinder of the inventor, further consideration under 37 C.F.R. §1.47 is not necessary. This application does not have any Rule 1.47 status and no such status should appear on the record for this file. This application should not be returned to this Office for any further consideration under 37 C.F.R. §1.47.

The instant application is released to the Office of Patent Application Processing (OPAP) for further processing in due course.

Telephone inquiries regarding this decision may be directed to the undersigned at (571) 272-3214—it is noted, however, that all practice before the Office is in writing (see: 37 C.F.R. §1.2[2]) and the proper authority for action on any matter in this regard are the statutes (35 U.S.C.), regulations (37 C.F.R.) and the commentary on policy (MPEP). Therefore, no telephone discussion may be controlling or considered authority for Petitioner's action(s).

/John J. Gillon, Jr./
John J. Gillon, Jr.
Senior Attorney
Office of Petitions

[2] The regulations at 37 C.F.R. §1.2 provide:
§1.2 Business to be transacted in writing.
All business with the Patent and Trademark Office should be transacted in writing. The personal attendance of applicants or their attorneys or agents at the Patent and Trademark Office is unnecessary. The action of the Patent and Trademark Office will be based exclusively on the written record in the Office. No attention will be paid to any alleged oral promise, stipulation, or understanding in relation to which there is disagreement or doubt.

UNITED STATES PATENT AND TRADEMARK OFFICE

COMMISSIONER FOR PATENTS
UNITED STATES PATENT AND TRADEMARK OFFICE
P.O. BOX 1450
ALEXANDRIA, VA 22313-1450
www.uspto.gov

Paper No.

DONN K. HARMS
PATENT & TRADEMARK LAW CENTER
SUITE 100
12702 VIA CORTINA
DEL MAR CA 92014

COPY MAILED

APR 10 2007

OFFICE OF PETITIONS

In re Application of	:	
Kevin Nash	:	DECISION ON PETITION
Application No. 11/144,962	:	
Filed: June 3, 2005	:	
Attorney Docket No. 3191-PAT	:	

This is in response to the "Request for Withdrawal of Abandonment" filed January 8, 2007. This paper is properly treated as a Petition to Withdraw Holding of Abandonment Under 37 CFR 1.181.

The above-identified application became abandoned for failure to reply to the non-final Office action mailed May 12, 2006. The Office action set a three-month shortened statutory period, with extensions of time obtainable under § 1.136(a). No reply considered received and no extension considered obtained, the above-identified application became abandoned on August 13, 2006. A courtesy Notice of Abandonment was mailed on December 28, 2006.

Applicant asserts that the response was timely mailed on October 10, 2006. In support thereof, applicant submits a copy of the response, a copy of the attached certificate of mailing and a copy of their itemized and date-stamped postcard. Applicant states that a two-month extension was requested with the response and paid.

A postcard receipt, which itemizes and properly identifies the items, which are being filed, serves as *prima facie* evidence of receipt in the Office of all items listed thereon on the date stamped thereon by the Office. See MPEP 503. A review of petitioner's postcard receipt reveals that: 1) it was date stamped as received in the USPTO on October 13, 2006; 2) it specifically identifies the items being filed, including an "Amendment (18) pages," and a Certificate of Mailing dated October 10, 2006" and 3) it lacks any annotation of nonreceipt of any item denoted on the postcard. The evidence shows that a response to the non-final Office action should be considered filed on October 13, 2006.

However, the postcard does not itemize the filing of the two-month extension of time. Such an extension is necessary to make the response timely. Fortunately, a closer review of petitioner's evidence reveals that petitioner put the wrong application number on the transmittal documents. Thus, the papers, including the fee for an extension of time, were present in the misidentified application. This has been corrected. The response filed October 13, 2006, has been "moved" from the electronic record of the incorrectly identified application to the record of the instant application. Moreover, the response is considered timely filed.

It is noted that the payment for the two-month extension of time was processed as received on October 13, 2006 in the misidentified application has also been moved to the instant application.

Accordingly, the holding of abandonment is hereby **WITHDRAWN**.

The petition under § 1.181 is **GRANTED**.

No fee is required on petition under § 1.181.

Technology Center AU 3711 has been advised of this decision. The application file is, thereby, forwarded to the Technology Center's technical support staff to withdraw the holding of abandonment and for consideration by the examiner of the response filed October 13, 2006 (and re-supplied on petition filed January 8, 2007).

Telephone inquiries specific to this decision should be directed to the undersigned at (571) 272-3219.

Nancy Johnson
Senior Petitions Attorney
Office of Petitions

UNITED STATES PATENT AND TRADEMARK OFFICE

Commissioner for Patents
United States Patent and Trademark Office
P.O. Box 1450
Alexandria, VA 22313-1450
www.uspto.gov

MARRELL HANEY
1301 WEST 96TH STREET
CHICAGO, IL 60643

COPY MAILED
SEP 0 5 2006
OFFICE OF PETITIONS

In re Application of	:	
Marrell Haney	:	
Application No. 11/144,964	:	DECISION ON PETITION
Filed: June 3, 2005	:	TO MAKE SPECIAL UNDER
Attorney Docket No.	:	37 CFR 1.102(c)(1)
	:	

This is a decision on the petition under 37 CFR 1.102(c)(1), filed May 10, 2006, to make the above-identified application special based on applicant's age as set forth in M.P.E.P. § 708.02, Section IV.

The petition is **GRANTED**.

A grantable petition to make an application special under 37 CFR 1.102(c)(1) and MPEP § 708.02, Section IV: Applicant's Age must be accompanied by evidence showing that at least one of the applicants is 65 years of age, or more, such as a birth certificate or a statement by applicant. No fee is required

The instant petition includes a statement from Inventor Marrell Haney stating that he is over 65 years of age. Accordingly, the above-identified application has been accorded "special" status.

Telephone inquiries concerning this decision should be directed to Irvin Dingle at 571-272-3210.

All other inquiries concerning either the examination or status of the application should be directed to the Technology Center.

The application is being forwarded to the Technology Center Art Unit 3671 for action on the merits commensurate with this decision.

Irvin Dingle
Petitions Examiner
Office of Petitions

UNITED STATES PATENT AND TRADEMARK OFFICE

Commissioner for Patents
United States Patent and Trademark Office
P.O. Box 1450
Alexandria, VA 22313-1450
www.uspto.gov

SEYFARTH SHAW LLP
131 S. DEARBORN ST., SUITE2400
CHICAGO, IL 60603-5803

COPY MAILED
OCT 0 2 2006
OFFICE OF PETITIONS

In re Application of

Lawrence John Penkler :

Application No. 11/144,965

: DECISION ON PETITION

Filed: June 3, 2005

:

Attorney Docket No. 37569-407390

This is a decision on the petition under 37 CFR 1.137(b), filed July 19, 2006, to revive the above-identified application.

The petition is **GRANTED**.

The above-cited application became abandoned for failure to reply in a timely manner to the non-final Office action mailed October 20, 2005, which set a shortened statutory period for reply of three (3) months from its mailing date. No extension of time pursuant to 37 CFR 1.136(a) was obtained within the allowable period. Accordingly, the application became abandoned on January 21, 2006. A Notice of Abandonment was mailed on June 1, 2006.

The amendment filed July 19, 2006, is noted.

The application is being forwarded to Technology Center 1600, GAU 1623 for further processing.

Telephone inquiries concerning this decision should be directed to the undersigned at (571) 272-3222.

Kenya A. McLaughlin
Petitions Attorney
Office of Petitions

UNITED STATES PATENT AND TRADEMARK OFFICE

Commissioner for Patents
United States Patent and Trademark Office
P.O. Box 1450
Alexandria, VA 22313-1450
www.uspto.gov

COPY MAILED

SEP 0 8 2008

OFFICE OF PETITIONS

BANNER & WITCOFF, LTD.
1100 13TH STREET, N.W.
SUITE 1200
WASHINGTON, DC 20005-4051

In re Application of	:	
WIKMAN, Johan et al.	:	
Application No. 11/144,966	:	DECISION ON PETITION
Filed: June 03, 2005	:	TO WITHDRAW
Attorney Docket No. **004770.01759**	:	FROM RECORD
	:	

This is a decision on the Request to Withdraw as attorney or agent of record under 37 C.F.R. § 1.36(b), filed July 11, 2008.

The request is not approved because it is moot.

A review of the file record indicates that the power of attorney to BANNER & WITCOFF, LTD. has been revoked by the assignee of the patent application on August 04, 2008. Accordingly, the request to withdraw under 37 C.F.R. § 1.36(b) is moot.

All future communications from the Office will continue to be directed to the below-listed address until otherwise notified by applicant.

Telephone inquires concerning this decision should be directed to Tredelle Jackson at 571-272-2783.

Tredelle D. Jackson
Paralegal Specialist
Office of Petitions

cc: **BANNER & WITCOFF, LTD.**
1100 13th STREET, N.W.
SUITE 1200
WASHINGTON DC 20005-4051

UNITED STATES PATENT AND TRADEMARK OFFICE

Commissioner for Patents
United States Patent and Trademark Office
P.O. Box 1450
Alexandria, VA 22313-1450
www.uspto.gov

LAW OFFICE OF MICHAEL A.
BLAKE
112 BROAD STREET
MILFORD, CT 06460

COPY MAILED

SEP 25 2007

OFFICE OF PETITIONS

In re Application of

David A. Potts :

Application No. 11/144,968

: DECISION ON PETITION

Filed: June 3, 2005

:

Attorney Docket No. POTTS-005

This is a decision on the petition under 37 CFR 1.137(b), filed, August 31, 2007, to revive the above-identified application.

The petition is **GRANTED**.

The above-cited application became abandoned for failure to reply in a timely manner to the non-final Office action mailed October 13, 2006, which set a shortened statutory period for reply of three (3) months from its mailing date. No extension of time pursuant to 37 CFR 1.136(a) was obtained within the allowable period. Accordingly, the application became abandoned on January 14, 2007. A Notice of Abandonment was mailed June 18, 2007.

The amendment filed August 31, 2007, is noted.

The application is being forwarded to Technology 1700, GAU 1724 for further processing.

Telephone inquiries concerning this decision should be directed to the undersigned at (571) 272-3222.

Kenya A. McLaughlin
Petitions Attorney
Office of Petitions

UNITED STATES PATENT AND TRADEMARK OFFICE

Commissioner for Patents
United States Patent and Trademark Office
P.O. Box 1450
Alexandria, VA 22313-1450
www.uspto.gov

MAILED

JUL 26 2006
Director's Office
Group 3700

Patrick S. Yoder
FLETCHER YODER
P.O. Box 692289

In re application of James Nelson	:	**NOTICE OF WITHDRAWAL FROM ISSUE UNDER 37 CFR. 1.313**
Serial Number 11/144,978 Filed: June 03, 2005	:	

For: **INFRARED CURING DEVICE HAVING ELECTRICALLY ACTUATED ARM AND SYSTEM AND METHOD THEREWITH**

The purpose of this communication is to inform you that the above-identified application is being withdrawn from issue pursuant to 37 CRF 1.313.

The application is being withdrawn from issue to permit reopening of prosecution, due to newly discovered prior art. The examiner will communicate an office action to you.

Patent and Trademark Office records reveal that the issue fee has not been paid. If the issue fee has been submitted, the applicant may request a refund, or may request that the fee be credited to a deposit account. However, applicant may wait until the application is either again found allowable or held abandoned. If the application is allowed, upon receipt of a new Notice of Allowance and Issue Fee Due, applicant may request that the previously submitted issue fee be applied toward payment of the issue fee in the amount identified on the new Notice of Allowance and Issue Fee Due. If the application is abandoned, applicant may request either a refund or a credit to a Deposit Account.

The application is being forwarded to the examiner for action.

Karen M. Young

Karen M. Young, Director
Technology Center 3700
571-272-3750

rt/ 7/25/06

DAC IFW

UNITED STATES PATENT AND TRADEMARK OFFICE

Commissioner for Patents
United States Patent and Trademark Office
P.O. Box 1450
Alexandria, VA 22313-1450
www.uspto.gov

OIPE IAP64
AUG 01 2006
PATENT & TRADEMARK OFFICE

MAILED

JUL 26 2006
Director's Office
Group 3700

Patrick S. Yoder
FLETCHER YODER
P.O. Box 692289

In re application of James Nelson	:	**NOTICE OF WITHDRAWAL FROM ISSUE UNDER 37 CFR. 1.313**
Serial Number 11/144,978 Filed: June 03, 2005	:	

For: **INFRARED CURING DEVICE HAVING ELECTRICALLY ACTUATED ARM AND SYSTEM AND METHOD THEREWITH**

The purpose of this communication is to inform you that the above-identified application is being withdrawn from issue pursuant to 37 CRF 1.313.

The application is being withdrawn from issue to permit reopening of prosecution, due to newly discovered prior art. The examiner will communicate an office action to you.

Patent and Trademark Office records reveal that the issue fee has not been paid. If the issue fee has been submitted, the applicant may request a refund, or may request that the fee be credited to a deposit account. However, applicant may wait until the application is either again found allowable or held abandoned. If the application is allowed, upon receipt of a new Notice of Allowance and Issue Fee Due, applicant may request that the previously submitted issue fee be applied toward payment of the issue fee in the amount identified on the new Notice of Allowance and Issue Fee Due. If the application is abandoned, applicant may request either a refund or a credit to a Deposit Account.

The application is being forwarded to the examiner for action.

Karen M. Young

Karen M. Young, Director
Technology Center 3700
571-272-3750

rt/ 7/25/06

UNITED STATES PATENT AND TRADEMARK OFFICE

Commissioner for Patents
United States Patent and Trademark Office
P.O. Box 1450
Alexandria, VA 22313-1450
www.uspto.gov

RUBEN C. DELEON
WINSTEAD SECHROST & MINICK P.C.
P.O. BOX 50784
DALLAS TX 75201

COPY MAILED

AUG 3 1 2006

OFFICE OF PETITIONS

In re Application of	:	
Acuna, et al.	:	
Application No. 11/144,981	:	DECISION ON PETITION
Filed: June 3, 2005	:	TO WITHDRAW
Attorney Docket No. 43896-P001US	:	FROM RECORD
	:	

This is a decision on the Request to Withdraw as attorney or agent of record under 37 C.F.R. § 1.36(b), filed May 9, 2006.

The request is **APPROVED**.

A grantable request to withdraw as attorney/agent of record must be signed by every attorney/agent seeking to withdraw or contain a clear indication that one attorney is signing on behalf of another/others. A request to withdraw will not be approved unless at least 30 (thirty) days would remain between the date of approval and the later of the expiration date of a time to file a response or the expiration date of the maximum time period which can be extended under 37 C.F.R. § 1.136(a).

The request was signed by Ross Spencer Garsson, on behalf of all attorneys of record who are associated with customer No. 42013.

All attorneys/agents associated with the Customer Number 42013 have been withdrawn.

Applicant is reminded that there is no attorney of record at this time.

All future correspondence will be directed to the first named inventor Henry T. Acuna at the address indicated below.

There is an outstanding Office action mailed June 7, 2006 that requires a reply from the applicant.

Telephone inquiries concerning this decision should be directed to April M. Wise at 571-272-1642.

April M. Wise
Petitions Examiner
Office of Petitions

cc: Henry T. Acuna, Sr.
108 Poquita Drive
Rockport, TX 78382

UNITED STATES PATENT AND TRADEMARK OFFICE

UNITED STATES DEPARTMENT OF COMMERCE
United States Patent and Trademark Office
Address: COMMISSIONER FOR PATENTS
P.O. Box 1450
Alexandria, Virginia 22313-1450
www.uspto.gov

TUROCY & WATSON, LLP
127 Public Square
57th Floor, Key Tower
Cleveland, OH 44114

Mail Date: 04/20/2010

Applicant	: Subrahmanyam Dravida	: DECISION ON REQUEST FOR
Patent Number	: 7603141	: RECALCULATION of PATENT
Issue Date	: 10/13/2009	: TERM ADJUSTMENT IN VIEW
Appliction No	: 11/144,994	: OF WYETH AND NOTICE OF INTENT TO
Filed	: 06/02/2005	: ISSUE CERTIFICATE OF CORRECTION
		:

The Request for Recalculation is **GRANTED** to the extent indicated.

The patent term adjustment has been determined to be **921** days. The USPTO will *sua sponte* issue a certificate of correction reflecting the amount of PTA days determined by the recalculation.

Prior to the issuance of the certificate of correction, the USPTO will afford patentee an opportunity to be heard and request reconsideration. Accordingly, patentee has **one month or thirty (30) days**, whichever is longer, to file a request for reconsideration of this patent term adjustment calculation. See 35 U.S.C. 154(b)(3)(B)(ii) and 37 CFR 1.322(a)(4). No extensions of time will be granted under 37 CFR 1.136.

Patentee should use document code PET.OP if electronically filing a request for reconsideration of this patent term adjustment calculation. The patentee must also include the information required by 37 CFR 1.705(b)(2) and the fee required by 37 CFR 1.18(e). If patentee does not file a timely request for reconsideration of this patent term adjustment calculation including the information required by 37 CFR 1.705(b)(2) and the fee required by 37 CFR 1.18(e), the USPTO will issue a certificate of correction reflecting the PTA determination noted above.

Patentee should be aware that in order to preserve the right to review in the United States District Court for the District of Columbia of the USPTO patent term adjustment determination, patentee must ensure that he or she also take the steps required under 35 U.S.C. 154(b)(4)(A) in a timely manner. Nothing in the request for recalculation should be construed as providing an alternative time frame for commencing a civil action under 35 U.S.C. 154(b)(4)(A).

Any questions concerning this decision should be directed to the Office of Patent Legal Administration at 571-272-7702.

UNITED STATES PATENT AND TRADEMARK OFFICE

UNITED STATES DEPARTMENT OF COMMERCE
United States Patent and Trademark Office
Address: COMMISSIONER FOR PATENTS
P.O. Box 1450
Alexandria, Virginia 22313-1450
www.uspto.gov

CHOATE, HALL & STEWART LLP
SLOAN-KETTERING INSTITUTE FOR CANCER RESEARCH
TWO INTERNATIONAL PLACE
BOSTON, MA 02110

Mail Date: 04/21/2010

Applicant	: Samuel J. Danishefsky	: DECISION ON REQUEST FOR
Patent Number	: 7645454	: RECALCULATION of PATENT
Issue Date	: 01/12/2010	: TERM ADJUSTMENT IN VIEW
Appliction No	: 11/145,002	: OF WYETH AND NOTICE OF INTENT TO
Filed	: 06/03/2005	: ISSUE CERTIFICATE OF CORRECTION
		:

The Request for Recalculation is **GRANTED** to the extent indicated.

The patent term adjustment has been determined to be **496** days. The USPTO will *sua sponte* issue a certificate of correction reflecting the amount of PTA days determined by the recalculation.

Prior to the issuance of the certificate of correction, the USPTO will afford patentee an opportunity to be heard and request reconsideration. Accordingly, patentee has **one month or thirty (30) days**, whichever is longer, to file a request for reconsideration of this patent term adjustment calculation. See 35 U.S.C. 154(b)(3)(B)(ii) and 37 CFR 1.322(a)(4). No extensions of time will be granted under 37 CFR 1.136.

Patentee should use document code PET.OP if electronically filing a request for reconsideration of this patent term adjustment calculation. The patentee must also include the information required by 37 CFR 1.705(b)(2) and the fee required by 37 CFR 1.18(e). If patentee does not file a timely request for reconsideration of this patent term adjustment calculation including the information required by 37 CFR 1.705(b)(2) and the fee required by 37 CFR 1.18(e), the USPTO will issue a certificate of correction reflecting the PTA determination noted above.

Patentee should be aware that in order to preserve the right to review in the United States District Court for the District of Columbia of the USPTO patent term adjustment determination, patentee must ensure that he or she also take the steps required under 35 U.S.C. 154(b)(4)(A) in a timely manner. Nothing in the request for recalculation should be construed as providing an alternative time frame for commencing a civil action under 35 U.S.C. 154(b)(4)(A).

Any questions concerning this decision should be directed to the Office of Patent Legal Administration at 571-272-7702.

SPE RESPONSE FOR CERTIFICATE OF CORRECTION

Paper No.: 07302009

DATE : 6/10/09

TO SPE OF : ART UNIT 2879

SUBJECT : Request for Certificate of Correction for Appl. No.: 11145004 Patent No.: 7528539 B2

Please respond to this request for a certificate of correction within 7 days.

FOR IFW FILES:

Please review the requested changes/corrections as shown in the **COCIN** document(s) in the IFW application image. No new matter should be introduced, nor should the scope or meaning of the claims be changed.

Please complete the response (see below) and forward the completed response to scanning using document code **COCX**.

FOR PAPER FILES:

Please review the requested changes/corrections as shown in the attached certificate of correction. Please complete this form (see below) and forward it with the file to:

Certificates of Correction Branch (CofC)
South Tower - 9A22
Palm Location 7580

You can fax the Directors/SPE response to 571-270-9990

LAMONTE NEWSOME
Certificates of Correction Branch
703-308-9390 ext. 112

Thank You For Your Assistance

The request for issuing the above-identified correction(s) is hereby:
Note your decision on the appropriate box.

X **Approved**	**All** changes apply.
☐ **Approved in Part**	Specify below which changes **do not** apply.
☐ **Denied**	State the reasons for denial below.

Comments: Correction entered, as all references were considered (see PTO-1449 sent 9 March 2009)

/Edward J Glick/
SPE

2882
Art Unit

UNITED STATES PATENT AND TRADEMARK OFFICE

Commissioner for Patents
United States Patent and Trademark Office
P.O. Box 1450
Alexandria, VA 22313-1450
www.uspto.gov

MAIL

OCT 0 3 2005

DIRECTOR OFFICE
TECHNOLOGY CENTER 2600

MCGUIREWOODS, LLP
1750 TYSONS BLVD
SUITE 1800
MCLEAN VA 22102

In re Application of :
CHUNG, CHUL :
Application No. 11/145,010 :
Filed: June 6, 2005 :
For: **INTEGRATED AUDIO VIDEO SIGNAL PROCESSING SYSTEM USING CENTRALIZED PROCESSING OF SIGNALS** :

DECISION ON PETITION TO MAKE SPECIAL

This is a decision on the petition filed September 16, 2005 under Manual of Patent Examination Procedure §708.02, VIII requesting accelerated examination.

The petition under Manual of Patent Examination Procedure §708.02, VIII, must:
(1) be filed prior to receiving any examination by the examiner,
(2) be accompanied by the required fee- $130,
(3) the claims should be directed to a single invention (if it is determined that the claims pertain to more than one invention, then applicant will have to make an election without traverse or forfeit accelerated examination status),
(4) state that a pre-examination search was made, and fully discuss the search method employed, such as classes and subclasses searched, publications, Chemical abstracts, patents, etc. A search made by a foreign patent office satisfies this requirement,
(5) be accompanied by a copy of each of the references most closely related to the subject matter encompassed by the claims if said references are not already of record,
(6) fully discuss the references, pointing out with the particularity required by 37 C.F.R. §1.111 (b) and (c), how the claimed subject matter is patentable over the references.

The petitioner meets all the above-listed requirements. Accordingly, the petition is **GRANTED**.

The application will retain its special status throughout its entire prosecution, including any appeal to the Board of Patent Appeals and Interferences, subject only to diligent prosecution by the applicant. The application file is being forwarded to the examiner for appropriate action in due course.

Kenneth A. Wieder
Special Program Examiner
Technology Center 2600
Communications

UNITED STATES PATENT AND TRADEMARK OFFICE

UNITED STATES DEPARTMENT OF COMMERCE
United States Patent and Trademark Office
Address: COMMISSIONER FOR PATENTS
P.O. Box 1450
Alexandria, Virginia 22313-1450
www.uspto.gov

H.C. PARK & ASSOCIATES, PLC
8500 LEESBURG PIKE
SUITE 7500
VIENNA, VA 22182

Mail Date: 04/20/2010

Applicant	: Chul Chung	: DECISION ON REQUEST FOR
Patent Number	: 7653447	: RECALCULATION of PATENT
Issue Date	: 01/26/2010	: TERM ADJUSTMENT IN VIEW
Appliction No	: 11/145,010	: OF WYETH AND NOTICE OF INTENT TO
Filed	: 06/06/2005	: ISSUE CERTIFICATE OF CORRECTION
		:

The Request for Recalculation is **GRANTED** to the extent indicated.

The patent term adjustment has been determined to be **0** days. The USPTO will *sua sponte* issue a certificate of correction reflecting the amount of PTA days determined by the recalculation.

Prior to the issuance of the certificate of correction, the USPTO will afford patentee an opportunity to be heard and request reconsideration. Accordingly, patentee has **one month or thirty (30) days**, whichever is longer, to file a request for reconsideration of this patent term adjustment calculation. See 35 U.S.C. 154(b)(3)(B)(ii) and 37 CFR 1.322(a)(4). No extensions of time will be granted under 37 CFR 1.136.

Patentee should use document code PET.OP if electronically filing a request for reconsideration of this patent term adjustment calculation. The patentee must also include the information required by 37 CFR 1.705(b)(2) and the fee required by 37 CFR 1.18(e). If patentee does not file a timely request for reconsideration of this patent term adjustment calculation including the information required by 37 CFR 1.705(b)(2) and the fee required by 37 CFR 1.18(e), the USPTO will issue a certificate of correction reflecting the PTA determination noted above.

Patentee should be aware that in order to preserve the right to review in the United States District Court for the District of Columbia of the USPTO patent term adjustment determination, patentee must ensure that he or she also take the steps required under 35 U.S.C. 154(b)(4)(A) in a timely manner. Nothing in the request for recalculation should be construed as providing an alternative time frame for commencing a civil action under 35 U.S.C. 154(b)(4)(A).

Any questions concerning this decision should be directed to the Office of Patent Legal Administration at 571-272-7702.

UNITED STATES PATENT AND TRADEMARK OFFICE

COMMISSIONER FOR PATENTS
UNITED STATES PATENT AND TRADEMARK OFFICE
WASHINGTON, D.C. 20231
www.uspto.gov

APPLICATION NUMBER	FILING/RECEIPT DATE	FIRST NAMED APPLICANT	ATTORNEY DOCKET NUMBER
11/145,014	06/03/2005	Doug McGoon IV	MCGN.001A

CONFIRMATION NO.
1143

KNOBBE MARTENS OLSON & BEAR LLP
2040 MAIN STREET
FOURTEENTH FLOOR
IRVINE CA 92614

Date Mailed: November 18, 2005

Decision Dismissing Petition under 37 CFR 1.138(c)

The declaration of express abandonment will not be recognized

This is in response to the petition under 37 CFR 1.138(c), for express abandonment to avoid publication of the above-identified application.

The petition is dismissed.

The express abandonment will **not** be recognized for the reason(s) indicated below:

1. ☐ The petition under 37 CFR 1.138(c) was not filed in sufficient time to permit the appropriate officials to recognize the abandonment and remove the application from the publication process.

2. ☐ The petition was not signed by a party authorized by 37 CFR 1.33(b)(1), (3) or (4).

3. ☐ The Application was published in compliance with 35 U.S.C. 122(b), and it is available on the USPTO web site at http://www.uspto.gov/patft/index.html.

The application **has/will be published** as scheduled.

Telephone inquiries should be directed Office of Patent Publication, Pre-Grant Publication Division, 703-605-4283.

Barbara J. Debnam
Office of Patent Publication
Pre-Grant Publication Division

Rev. 10/01

UNITED STATES DEPARTMENT OF COMMERCE
COMMISSIONER FOR PATENTS
P. O. BOX 1450
ALEXANDRIA, VA 22313-1450

Date : 8/12/2008
Patent No. : 7,391,300 B2
Inventor(s) : Inkinen
Issue Date : June 24, 2008
Title : **SYSTEM FOR PROVIDING ALERT NOTIFICATIONS FOR A COMMUNICATION DEVICE**
Doc./File No. : **944-012.003**

Re: Certificate of Correction

Consideration has been given your request for a certificate of correction, for the above-identified patent under the provisions of Rule 1.322 and 1.323.

Respecting the alleged error(s) in item (56) References Cited, under foreign patent documents, the patent is/are printed in accordance with the record, since there is no record of a 1449 or 892 with the reference numbers approved by the examiner. No correction is in order here.

In view of the foregoing, your request in this matter is denied.

Further consideration will be given concerning this matter upon receipt of a request for **Reconsideration** (reconsideration should be accompanied by supporting document(s) such as, amendment, postcard receipt, 1449/892, etc.) and should be filed and directed to Decisions & Certificates of Correction Branch.

Ernest C. White, *LIE* (703) 308-9390 x122
Mary F. Diggs, *Supervisor* (703) 308-9390 x125
Decisions & Certificates of Correction Branch

WARE FRESSOLA VAN DER SLUYS & ADOLPHSON, LLP
BRADFORD GREEN, BUILDING 5
755 MAIN STREET, P O BOX 224
MONROE CT 06468

ecw

UNITED STATES PATENT AND TRADEMARK OFFICE

UNITED STATES DEPARTMENT OF COMMERCE
United States Patent and Trademark Office
Address: COMMISSIONER FOR PATENTS
P.O. Box 1450
Alexandria, Virginia 22313-1450
www.uspto.gov

GRAYBEAL JACKSON LLP
400 - 108TH AVENUE NE
SUITE 700
BELLEVUE, WA 98004

Mail Date: 04/21/2010

Applicant	: Pier Luigi Gardella	: DECISION ON REQUEST FOR
Patent Number	: 7623270	: RECALCULATION of PATENT
Issue Date	: 11/24/2009	: TERM ADJUSTMENT IN VIEW
Appliction No	: 11/145,021	: OF WYETH AND NOTICE OF INTENT TO
Filed	: 06/03/2005	: ISSUE CERTIFICATE OF CORRECTION
		:

The Request for Recalculation is **GRANTED** to the extent indicated.

The patent term adjustment has been determined to be **861** days. The USPTO will *sua sponte* issue a certificate of correction reflecting the amount of PTA days determined by the recalculation.

Prior to the issuance of the certificate of correction, the USPTO will afford patentee an opportunity to be heard and request reconsideration. Accordingly, patentee has **one month or thirty (30) days**, whichever is longer, to file a request for reconsideration of this patent term adjustment calculation. See 35 U.S.C. 154(b)(3)(B)(ii) and 37 CFR 1.322(a)(4). No extensions of time will be granted under 37 CFR 1.136.

Patentee should use document code PET.OP if electronically filing a request for reconsideration of this patent term adjustment calculation. The patentee must also include the information required by 37 CFR 1.705(b)(2) and the fee required by 37 CFR 1.18(e). If patentee does not file a timely request for reconsideration of this patent term adjustment calculation including the information required by 37 CFR 1.705(b)(2) and the fee required by 37 CFR 1.18(e), the USPTO will issue a certificate of correction reflecting the PTA determination noted above.

Patentee should be aware that in order to preserve the right to review in the United States District Court for the District of Columbia of the USPTO patent term adjustment determination, patentee must ensure that he or she also take the steps required under 35 U.S.C. 154(b)(4)(A) in a timely manner. Nothing in the request for recalculation should be construed as providing an alternative time frame for commencing a civil action under 35 U.S.C. 154(b)(4)(A).

Any questions concerning this decision should be directed to the Office of Patent Legal Administration at 571-272-7702.

UNITED STATES PATENT AND TRADEMARK OFFICE

UNITED STATES DEPARTMENT OF COMMERCE
United States Patent and Trademark Office
Address: COMMISSIONER FOR PATENTS
P.O. Box 1450
Alexandria, Virginia 22313-1450
www.uspto.gov

GRAYBEAL JACKSON LLP
400 - 108TH AVENUE NE
SUITE 700
BELLEVUE, WA 98004

Mail Date: 05/18/2010

Applicant : Pier Luigi Gardella
Patent Number : 7623270
Issue Date : 11/24/2009
Application No : 11/145,021
Filed : 06/03/2005

: NOTICE CONCERNING IMPROPER
: CALCULATION OF PATENT TERM
: ADJUSTMENT BASED UPON USPTO
: IMPROPERLY MEASURING REDUCTION
: PERIOD UNDER 37 CFR 1.704(c)(10).

The United States Patent and Trademark Office (USPTO) discovered that in processing the recent recalculation decisions mailed in response to patentee's filed Request for Recalculation of Patent Term Adjustment in view of Wyeth, the USPTO improperly measured the reduction period for reductions under 37 CFR 1.704(c)(10). Pursuant to 37 CFR 1.704(c)(10), patentee's reduction begins on the date of filing the amendment under 37 CFR 1.312 ("1.312 amendment") or other related paper and ends on the date that the Office mails a response to the filing of the 1.312 amendment or other paper. It has been discovered that during the recalculation, the calculation failed to the limit the reduction to the mail date of the response to the 1.312 amendment or other paper. Accordingly, patentee's reductions were greater than warranted.

This notice **VACATES** the previous GRANTED request for recalculation and provides patentee with a revised GRANTED recalculation.

The patent term adjustment has been determined to be **917** days. The USPTO will *sua sponte* issue a certificate of correction reflecting the amount of patent term adjustment (PTA) days determined by the recalculation.

Prior to the issuance of the certificate of correction, the USPTO will afford patentee an opportunity to be heard and request reconsideration. Accordingly, patentee has **one month or thirty (30) days** from the mail date of this notice, whichever is longer, to file a request for reconsideration of this PTA calculation. See 35 U.S.C. § 154(b)(3)(B)(ii) and 37 CFR 1.322(a)(4).

Patentee should use document code PET.OP if electronically filing a request for reconsideration of this PTA calculation. The patentee must also include the information required by 37 CFR 1.705(b)(2), and the fee required by 37 CFR 1.18(e). If patentee does not file a timely request for reconsideration of this PTA calculation, including the information required by 37 CFR 1.705(b)(2) and the fee required by 37 CFR 1.18(e), the USPTO will issue a certificate of correction reflecting the PTA determination noted above.

Patentee should be aware that in order to preserve the right of review of the USPTO's PTA determination in the United States District Court for the District of Columbia, patentee must ensure that the steps required under 35 U.S.C. § 154 (b)(4) are taken in a timely manner. Nothing in the request for recalculation should be construed as providing an alternative time frame for commencing a civil action under 35 U.S.C. § 154(b)(4).

UNITED STATES PATENT AND TRADEMARK OFFICE

COMMISSIONER FOR PATENTS
UNITED STATES PATENT AND TRADEMARK OFFICE
WASHINGTON, DC 20231
www.uspto.gov

Peter I. Bernstein
Scully, Scott, Murphy & Presser, P.C.
400 Garden City Plaza, Suite 300
Garden City, New York 11530

MAIL

MAY 05 2008

DIRECTOR'S OFFICE
TECHNOLOGY CENTER 2600

In re Application of
Liyan Zhang *et al.*
Serial No.: 11/145,033
Filed: June 3, 2005
For: 3D FACE AUTHENTICATION AND RECOGNITION BASED ON BILATERAL SYMMETRY ANALYSIS

DECISION ON PETITION
ACCEPTANCE OF COLOR DRAWINGS

This is a decision on the petition under 37 CFR §1.84(a)(2) filed February 29, 2008 requesting acceptance of color drawings.

The petition requests that the color drawings identified in Figures 3-5, 7-15 and 18 be accepted in lieu of black and white drawings.

A grantable petition under 37 C.F.R. §1.84(a)(2) must be accompanied by a fee set forth under 37 C.F.R. § 1.17(h), 3 (three) sets of the color drawings in question, and the specification must contain, or be amended to contain, the following language as the first paragraph in that portion of the specification relating to the brief description of the drawings:

"The file of this patent contains at least one drawing executed in color. Copies of this patent with color drawing(s) will be provided by the Patent and Trademark Office upon request and payment of the necessary fee."

The petition is **GRANTED**.

Kenneth A. Wieder
Quality Assurance Specialist
Technology Center 2600
Communications

UNITED STATES PATENT AND TRADEMARK OFFICE

UNITED STATES DEPARTMENT OF COMMERCE
United States Patent and Trademark Office
Address: COMMISSIONER FOR PATENTS
P.O. Box 1450
Alexandria, Virginia 22313-1450
www.uspto.gov

JACKSON & CO., LLP
6114 LA SALLE AVENUE
#507
OAKLAND, CA 94611-2802

Mail Date: 04/20/2010

Applicant	: Christopher V. Reggiardo	: DECISION ON REQUEST FOR
Patent Number	: 7620437	: RECALCULATION of PATENT
Issue Date	: 11/17/2009	: TERM ADJUSTMENT IN VIEW
Appliction No	: 11/145,048	: OF WYETH AND NOTICE OF INTENT TO
Filed	: 06/03/2005	: ISSUE CERTIFICATE OF CORRECTION
		:

The Request for Recalculation is **GRANTED** to the extent indicated.

The patent term adjustment has been determined to be **230** days. The USPTO will *sua sponte* issue a certificate of correction reflecting the amount of PTA days determined by the recalculation.

Prior to the issuance of the certificate of correction, the USPTO will afford patentee an opportunity to be heard and request reconsideration. Accordingly, patentee has **one month or thirty (30) days**, whichever is longer, to file a request for reconsideration of this patent term adjustment calculation. See 35 U.S.C. 154(b)(3)(B)(ii) and 37 CFR 1.322(a)(4). No extensions of time will be granted under 37 CFR 1.136.

Patentee should use document code PET.OP if electronically filing a request for reconsideration of this patent term adjustment calculation. The patentee must also include the information required by 37 CFR 1.705(b)(2) and the fee required by 37 CFR 1.18(e). If patentee does not file a timely request for reconsideration of this patent term adjustment calculation including the information required by 37 CFR 1.705(b)(2) and the fee required by 37 CFR 1.18(e), the USPTO will issue a certificate of correction reflecting the PTA determination noted above.

Patentee should be aware that in order to preserve the right to review in the United States District Court for the District of Columbia of the USPTO patent term adjustment determination, patentee must ensure that he or she also take the steps required under 35 U.S.C. 154(b)(4)(A) in a timely manner. Nothing in the request for recalculation should be construed as providing an alternative time frame for commencing a civil action under 35 U.S.C. 154(b)(4)(A).

Any questions concerning this decision should be directed to the Office of Patent Legal Administration at 571-272-7702.

UNITED STATES PATENT AND TRADEMARK OFFICE

Commissioner for Patents
United States Patent and Trademark Office
P.O. Box 1450
Alexandria, VA 22313-1450
www.uspto.gov

TOWNSEND AND TOWNSEND AND CREW, LLP
TWO EMBARCADERO CENTER
8TH FLOOR
SAN FRANCISCO, CA 94111

COPY MAILED

OCT 29 2007

OFFICE OF PETITIONS

In re Application of	:	
Mark G. Erlander, et al.	:	
Application No. 11/145,061	:	DECISION ON PETITION
Filed: June 3, 2005	:	TO WITHDRAW
Attorney Docket No. 022041-002410US	:	FROM RECORD
	:	

This is a decision on the Request to Withdraw as attorney or agent of record under 37 C.F.R. § 1.36(b) filed June 4, 2007.

The request is **NOT APPROVED**.

A grantable request to withdraw as attorney/agent of record must be signed by every attorney/agent seeking to withdraw or contain a clear indication that one attorney is signing on behalf of another/others. A request to withdraw will not be approved unless at least 30 (thirty) days would remain between the date of approval and the later of the expiration date of a time to file a response or the expiration date of the maximum time period which can be extended under 37 C.F.R. § 1.136(a).

The Office cannot approve the request at this time since the reasons provided do not meet any of the conditions under the mandatory or permissive categories enumerated in 37 CFR 10.40. Section 10.40 of Title 37 of the Code of Federal Regulation states, "[a] practitioner shall not withdraw from employment in a proceeding before the Office without permission from the Office[.]" More specifically, 37 CFR 10.40 states, "[i]f paragraph (b) of this section is not applicable, a practitioner may not request permission to withdraw in matter pending before the Office unless such request or such withdrawal is" for one the permissive reasons listed in 37 CFR 10.40(c). The reasons set forth in the request, "at the request of the client, AviaraDx Corporation", does not meet any of the conditions set forth in 37 CFR 10.40.

In order to request or take action in a patent matter, the assignee must establish its ownership of the patent to the satisfaction of the Director. In this regard, a Statement under 37 CFR 3.73(b) must have either: (i) documentary evidence of a chain of title from the original owner to the assignee (*e.g.*, copy of an executed assignment), and a statement affirming that the documentary evidence of the chain of title from the original owner to the assignee was or concurrently is being

submitted for recordation pursuant to § 3.11; or (ii) a statement specifying where documentary evidence of a chain of title from the original owner to the assignee is recorded in the assignment records of the Office (*e.g.*, reel and frame number).

It is also noted that the petitioner wishes to withdraw by Customer No. 20350, but not appointed by this customer number. The customer number of appointment is 41578. Please refer to this customer number for any renewed petitions.

All future communications from the Office will continue to be directed to the above-listed address until otherwise notified by applicant.

There is an outstanding Office action mailed September 21, 2007 that requires a reply by the applicant.

Telephone inquiries concerning this decision should be directed to undersigned at 571-272-1642.

April M. Wise
Petitions Examiner
Office of Petitions

cc: PATENTIQUE PLLC
PO BOX 5803
BELLEVUE, WA 98006

UNITED STATES PATENT AND TRADEMARK OFFICE

UNITED STATES DEPARTMENT OF COMMERCE
United States Patent and Trademark Office
Address: COMMISSIONER FOR PATENTS
P.O. Box 1450
Alexandria, Virginia 22313-1450
www.uspto.gov

ROYLANCE, ABRAMS, BERDO & GOODMAN, L.L.P.
1300 19TH STREET, N.W.
SUITE 600
WASHINGTON,, DC 20036

Mail Date: 04/21/2010

Applicant	: Seong-Geun Kwon	: DECISION ON REQUEST FOR
Patent Number	: 7657056	: RECALCULATION of PATENT
Issue Date	: 02/02/2010	: TERM ADJUSTMENT IN VIEW
Appliction No	: 11/145,065	: OF WYETH AND NOTICE OF INTENT TO
Filed	: 06/06/2005	: ISSUE CERTIFICATE OF CORRECTION
		:

The Request for Recalculation is **GRANTED** to the extent indicated.

The patent term adjustment has been determined to be **940** days. The USPTO will *sua sponte* issue a certificate of correction reflecting the amount of PTA days determined by the recalculation.

Prior to the issuance of the certificate of correction, the USPTO will afford patentee an opportunity to be heard and request reconsideration. Accordingly, patentee has **one month or thirty (30) days**, whichever is longer, to file a request for reconsideration of this patent term adjustment calculation. See 35 U.S.C. 154(b)(3)(B)(ii) and 37 CFR 1.322(a)(4). No extensions of time will be granted under 37 CFR 1.136.

Patentee should use document code PET.OP if electronically filing a request for reconsideration of this patent term adjustment calculation. The patentee must also include the information required by 37 CFR 1.705(b)(2) and the fee required by 37 CFR 1.18(e). If patentee does not file a timely request for reconsideration of this patent term adjustment calculation including the information required by 37 CFR 1.705(b)(2) and the fee required by 37 CFR 1.18(e), the USPTO will issue a certificate of correction reflecting the PTA determination noted above.

Patentee should be aware that in order to preserve the right to review in the United States District Court for the District of Columbia of the USPTO patent term adjustment determination, patentee must ensure that he or she also take the steps required under 35 U.S.C. 154(b)(4)(A) in a timely manner. Nothing in the request for recalculation should be construed as providing an alternative time frame for commencing a civil action under 35 U.S.C. 154(b)(4)(A).

Any questions concerning this decision should be directed to the Office of Patent Legal Administration at 571-272-7702.

UNITED STATES PATENT AND TRADEMARK OFFICE

UNITED STATES DEPARTMENT OF COMMERCE
United States Patent and Trademark Office
Address: COMMISSIONER FOR PATENTS
P.O. Box 1450
Alexandria, Virginia 22313-1450
www.uspto.gov

YOUNG & THOMPSON
209 Madison Street
Suite 500
Alexandria, VA 22314

Mail Date: 06/01/2010

Applicant	: Robert Petit	: DECISION ON REQUEST FOR
Patent Number	: 7628559	: RECALCULATION of PATENT
Issue Date	: 12/08/2009	: TERM ADJUSTMENT IN VIEW
Application No	: 11/145,066	: OF WYETH AND NOTICE OF INTENT TO
Filed	: 06/06/2005	: ISSUE CERTIFICATE OF CORRECTION
		:

The Request for Recalculation is **GRANTED** to the extent indicated.

The patent term adjustment has been determined to be **908** days. The USPTO will *sua sponte* issue a certificate of correction reflecting the amount of PTA days determined by the recalculation.

Prior to the issuance of the certificate of correction, the USPTO will afford patentee an opportunity to be heard and request reconsideration. Accordingly, patentee has **one month or thirty (30) days**, whichever is longer, to file a request for reconsideration of this patent term adjustment calculation. See 35 U.S.C. 154(b)(3)(B)(ii) and 37 CFR 1.322(a)(4). No extensions of time will be granted under 37 CFR 1.136.

Patentee should use document code PET.OP if electronically filing a request for reconsideration of this patent term adjustment calculation. The patentee must also include the information required by 37 CFR 1.705(b)(2) and the fee required by 37 CFR 1.18(e). If patentee does not file a timely request for reconsideration of this patent term adjustment calculation including the information required by 37 CFR 1.705(b)(2) and the fee required by 37 CFR 1.18(e), the USPTO will issue a certificate of correction reflecting the PTA determination noted above.

Patentee should be aware that in order to preserve the right to review in the United States District Court for the District of Columbia of the USPTO patent term adjustment determination, patentee must ensure that he or she also take the steps required under 35 U.S.C. 154(b)(4)(A) in a timely manner. Nothing in the request for recalculation should be construed as providing an alternative time frame for commencing a civil action under 35 U.S.C. 154(b)(4)(A).

Any questions concerning this decision should be directed to the Office of Patent Legal Administration at 571-272-7702.

UNITED STATES PATENT AND TRADEMARK OFFICE

COMMISSIONER FOR PATENTS
UNITED STATES PATENT AND TRADEMARK OFFICE
P.O. BOX 1450
ALEXANDRIA, VA 22313-1450
WWW.USPTO.GOV

Paper No. None

LYON & HARR, LLP
300 ESPLANADE DRIVE, SUITE 800
OXNARD CA 93036

COPY MAILED

SEP 0 9 2005

OFFICE OF PETITIONS

In re Application of	:	
David Salesin et al.	:	
Application No. 11/145,070	:	DECISION ON PETITION UNDER
Filed: June 3, 2005	:	37 C.F.R. §1.182
Attorney Docket No.: 300301.04	:	
Title: SYSTEM AND METHOD FOR	:	
ADAPTIVE DOCUMENT LAYOUT VIA	:	
MANIFOLD CONTENT	:	

This is a decision on the petition filed August 18, 2005, requesting that the above-identified application, including Figures 15E and 15F, be accorded a filing date of June 3, 2005 as part of the original disclosure.

The application was deposited on June 3, 2005. However, on June 29, 2005, the Office of Initial Patent Examination (OIPE) mailed a "Notice of Omitted Item(s) in a Nonprovisional Application" (notice), stating that the application had been accorded a filing date, and advising applicants that it appeared as though Figures 15E and 15F had been omitted. The notice set a two-month period of reply.

In response, on August 18, 2005, applicants filed the present petition. **It is noted that this is outside of the period for response.** The petition is further accompanied by a copy of Figures 15E and 15F, along with a copy of applicants' postcard receipt acknowledging receipt of "Formal Drawings (21 sheets)" in the United States Patent and Trademark Office (Office) on June 3, 2005. Applicants request that Figures 15E and 15F be accorded a filing date of June 3, 2005.

Upon review of the electronic file, the above-mentioned figures have not been located among the application papers: the electronic file contains 20 pages of drawings, consisting of Figures 1-15D and 16A - 17. However, the evidence is convincing that the application papers deposited on June 3, 2005 included Figures 15E and 15F, and the sheet containing these figures was subsequently misplaced in the Office.

Therefore, the application, including Figures 15E and 15F, was complete on filing and entitled to a filing date of June 3, 2005 as part of the original disclosure.

Accordingly, the petition under 37 C.F.R. §1.182 is **GRANTED**.

The notice mailed June 29, 2005 was sent in error, and is hereby **VACATED**. Therefore, no petition fee is necessary, and a treasury check will be mailed in due course.

OIPE will be advised to process the application with a filing date of June 3, 2005, using the original application papers filed on that date, as well as Figures 15E and 15F submitted on August 18, 2005, and for noting in Office records that these pages were present on filing.

Telephone inquiries regarding this decision should be directed to the undersigned at (571) 272-3225. All other inquiries concerning examination procedures or status of the application should be directed to the Technology Center.

Paul Shanoski
Senior Attorney
Office of Petitions
United States Patent and Trademark Office

UNITED STATES PATENT AND TRADEMARK OFFICE

UNITED STATES DEPARTMENT OF COMMERCE
United States Patent and Trademark Office
Address: COMMISSIONER FOR PATENTS
P.O. Box 1450
Alexandria, Virginia 22313-1450
www.uspto.gov

APPL NO.	FILING OR 371 (c) DATE	ART UNIT	FIL FEE REC'D	ATTY.DOCKET NO	DRAWINGS	TOT CLMS	IND CLMS
11/145,121	06/02/2005	2882	1700	007291.P006	8	26	5

CONFIRMATION NO. 3155

CORRECTED FILING RECEIPT

OC000000016845337

Daniel E. Ovanezian
BLAKELY, SOKOLOFF, TAYLOR & ZAFMAN LLP
Seventh Floor
12400 Wilshire Boulevard
Los Angeles, CA 90025

Date Mailed: 08/24/2005

Receipt is acknowledged of this regular Patent Application. It will be considered in its order and you will be notified as to the results of the examination. Be sure to provide the U.S. APPLICATION NUMBER, FILING DATE, NAME OF APPLICANT, and TITLE OF INVENTION when inquiring about this application. Fees transmitted by check or draft are subject to collection. Please verify the accuracy of the data presented on this receipt. **If an error is noted on this Filing Receipt, please mail to the Commissioner for Patents P.O. Box 1450 Alexandria Va 22313-1450. Please provide a copy of this Filing Receipt with the changes noted thereon. If you received a "Notice to File Missing Parts" for this application, please submit any corrections to this Filing Receipt with your reply to the Notice. When the USPTO processes the reply to the Notice, the USPTO will generate another Filing Receipt incorporating the requested corrections (if appropriate).**

Applicant(s)

Jay B. West, Mountain View, CA;
Hongwu Wang, Milpitas, CA;
John R. Dooley, Castro Valley, CA;

Power of Attorney: The patent practitioners associated with Customer Number **08791**.

Domestic Priority data as claimed by applicant

Foreign Applications

If Required, Foreign Filing License Granted: 07/01/2005

The country code and number of your priority application, to be used for filing abroad under the Paris Convention, is US11/145,121

Projected Publication Date: 12/07/2006

Non-Publication Request: No

Early Publication Request: No

Title

Generating a volume of interest using a dose isocontour

Preliminary Class

378

PROTECTING YOUR INVENTION OUTSIDE THE UNITED STATES

Since the rights granted by a U.S. patent extend only throughout the territory of the United States and have no effect in a foreign country, an inventor who wishes patent protection in another country must apply for a patent in a specific country or in regional patent offices. Applicants may wish to consider the filing of an international application under the Patent Cooperation Treaty (PCT). An international (PCT) application generally has the same effect as a regular national patent application in each PCT-member country. The PCT process **simplifies** the filing of patent applications on the same invention in member countries, but **does not result** in a grant of "an international patent" and does not eliminate the need of applicants to file additional documents and fees in countries where patent protection is desired.

Almost every country has its own patent law, and a person desiring a patent in a particular country must make an application for patent in that country in accordance with its particular laws. Since the laws of many countries differ in various respects from the patent law of the United States, applicants are advised to seek guidance from specific foreign countries to ensure that patent rights are not lost prematurely.

Applicants also are advised that in the case of inventions made in the United States, the Director of the USPTO must issue a license before applicants can apply for a patent in a foreign country. The filing of a U.S. patent application serves as a request for a foreign filing license. The application's filing receipt contains further information and guidance as to the status of applicant's license for foreign filing.

Applicants may wish to consult the USPTO booklet, "General Information Concerning Patents" (specifically, the section entitled "Treaties and Foreign Patents") for more information on timeframes and deadlines for filing foreign patent applications. The guide is available either by contacting the USPTO Contact Center at 800-786-9199, or it can be viewed on the USPTO website at http://www.uspto.gov/web/offices/pac/doc/general/index.html.

For information on preventing theft of your intellectual property (patents, trademarks and copyrights), you may wish to consult the U.S. Government website, http://www.stopfakes.gov. Part of a Department of Commerce initiative, this website includes self-help "toolkits" giving innovators guidance on how to protect intellectual property in specific countries such as China, Korea and Mexico. For questions regarding patent enforcement issues, applicants may call the U.S. Government hotline at 1-866-999-HALT (1-866-999-4158).

LICENSE FOR FOREIGN FILING UNDER
Title 35, United States Code, Section 184
Title 37, Code of Federal Regulations, 5.11 & 5.15

GRANTED

The applicant has been granted a license under 35 U.S.C. 184, if the phrase "IF REQUIRED, FOREIGN FILING LICENSE GRANTED" followed by a date appears on this form. Such licenses are issued in all applications where the conditions for issuance of a license have been met, regardless of whether or not a license may be required as set forth in 37 CFR 5.15. The scope and limitations of this license are set forth in 37 CFR 5.15(a) unless an earlier license has been issued under 37 CFR 5.15(b). The license is subject to revocation upon written notification. The date indicated is the effective date of the license, unless an earlier license of similar scope has been granted under 37 CFR 5.13 or 5.14.

This license is to be retained by the licensee and may be used at any time on or after the effective date thereof

unless it is revoked. This license is automatically transferred to any related applications(s) filed under 37 CFR 1.53(d). This license is not retroactive.

The grant of a license does not in any way lessen the responsibility of a licensee for the security of the subject matter as imposed by any Government contract or the provisions of existing laws relating to espionage and the national security or the export of technical data. Licensees should apprise themselves of current regulations especially with respect to certain countries, of other agencies, particularly the Office of Defense Trade Controls, Department of State (with respect to Arms, Munitions and Implements of War (22 CFR 121-128)); the Office of Export Administration, Department of Commerce (15 CFR 370.10 (j)); the Office of Foreign Assets Control, Department of Treasury (31 CFR Parts 500+) and the Department of Energy.

NOT GRANTED

No license under 35 U.S.C. 184 has been granted at this time, if the phrase "IF REQUIRED, FOREIGN FILING LICENSE GRANTED" DOES NOT appear on this form. Applicant may still petition for a license under 37 CFR 5.12, if a license is desired before the expiration of 6 months from the filing date of the application. If 6 months has lapsed from the filing date of this application and the licensee has not received any indication of a secrecy order under 35 U.S.C. 181, the licensee may foreign file the application pursuant to 37 CFR 5.15(b).

UNITED STATES PATENT AND TRADEMARK OFFICE

Commissioner for Patents
United States Patent and Trademark Office
P.O. Box 1450
Alexandria, VA 22313-1450
www.uspto.gov

MINTZ, LEVIN, COHN, FERRIS,
GLOVSKY AND POPEO, P.C
ONE FINANCIAL CENTER
BOSTON MA 02111

MAILED

APR 26 2010

OFFICE OF PETITIONS

In re Application of	:	
Mach et al.	:	
Application No. 11/145,131	:	ON APPLICATION FOR
Filed: June 3, 2005	:	PATENT TERM ADJUSTMENT
Atty Docket No. 23135-407	:	

This is in response to the REQUEST FOR RECONSIDERATION OF PATENT TERM ADJUSTMENT UNDER 37 C.F.R. § 1.705(b) filed January 19, 2010. Applicants submit that the patent term adjustment to be indicated on the patent is at a minimum six hundred eighty-two (682) days, not one hundred fifty-eight (158) days as calculated by the Office as of the mailing of the initial determination of patent term adjustment. Applicants request this correction on the basis that the Office will take in excess of three years to issue this patent.

In addition, applicants dispute the period of reduction assessed for the delay associated with the filing of a complete response to the August 24, 2005 Notice to File Missing Parts of Nonprovisional Application.

To the extent that applicants request reconsideration of the patent term adjustment as it relates to the Office's failure to issue the patent within 3 years of the filing date, the application for patent term adjustment under 37 CFR 1.705(b) is **DISMISSED as PREMATURE**.

Knowledge of the actual date the patent issues is required to calculate the amount, if any, of additional patent term patentees are entitled to for Office failure to issue the patent within 3 years. See § 1.702(b). The computer will not undertake the § 1.702(b) calculation until the actual date of issuance of the patent has been determined. Likewise, the computer will not calculate any further Office delay under § 1.702(a)(4) or applicant delay under § 1.704(c)(10) until the actual date of issuance of the patent has been determined. As such, the Office

cannot make a determination on the correctness of the patent term adjustment until the patent has issued.

Requesting reconsideration of the patent term adjustment to be indicated on the patent under 37 CFR 1.705(b) based on the initial determination of patent term adjustment and a projected issuance date of the patent is premature. Accordingly, it is appropriate to dismiss as premature such a request.

Rather than file an application for patent term adjustment under 37 CFR 1.705(b) contesting the 37 CFR 1.702(b) calculation at the time of the mailing of the notice of allowance, applicants are advised that they may wait until the time of the issuance of the patent and file a request for reconsideration of the patent term adjustment pursuant to 37 CFR 1.705(d). As the USPTO does not calculate the amount of time earned pursuant to 37 CFR 1.702(b) until the time of the issuance of the patent, the Office will consider any request for reconsideration of the patent term adjustment due to an error in the calculation of 37 CFR 1.702(b) to be timely if the request for reconsideration is filed within two months of the issuance of the patent. However, as to all other bases for contesting the initial determination of patent term adjustment received with the notice of allowance, applicants must timely file an application for patent term adjustment prior to the payment of the issue fee[1].

To the extent that applicants otherwise request correction of the initial determination of patent term adjustment (PTA), the application for patent term adjustment is **DISMISSED**.

On October 19, 2009, the Office mailed the Determination of Patent Term Adjustment under 35 U.S.C. 154(b) in the above-identified application. The Notice stated that the patent term adjustment is 158 days. On January 19, 2010, applicants timely submitted the instant request for reconsideration of patent term. Applicants argue that the Office erred in calculating the

---

[1] For example, if applicant disputes both the calculation of patent term adjustment under 37 CFR 1.702(a)(1) for Office failure to mail a first Office action or notice of allowance not later than fourteen months after the date on which the application was filed and under 37 CFR 1.702(b) for Office failure to issue a patent within three years of the actual filing date of the application, then applicant must still timely file an application for patent term adjustment prior to the payment of the issue fee to contest the calculation of Office delay in issuing a first Office action or notice of allowance. See 37 CFR 1.705(b) and 35 U.S.C. 154(b)(3)(B). A dispute as to the calculation of the §1.702(a)(1) period raised on request for reconsideration of patent term adjustment under 37 CFR 1.705(d) will be dismissed as untimely filed.

reduction associated with filing of a complete reply to the August 24, 2005 Notice to File Missing Parts of Nonprovisional Application.

Applicants contend that the reduction should be calculated solely under 37 CFR 1.704(b), rather than under 37 CFR 1.704(b) and 37 CFR 1.704(c)(7).

37 CFR 1.704(b) provides that an applicant shall be deemed to have failed to engage in reasonable efforts to conclude prosecution for the cumulative total of any periods of time in excess of three months that are taken to reply to any notice or action by the Office making any rejection, objection, argument, or other request, measuring such three-month period from the date the notice or action was mailed or given to the applicant.

37 CFR 1.704(c)(7) establishes submission of a reply having an omission (37 CFR 1.135(c)) as a circumstance that constitutes a failure of an applicant to engage in reasonable efforts to conclude processing or examination of an application. Submitting a reply having an omission requires the Office to issue an action under 37 CFR 1.135(c) and await and process the applicant's reply to the action under 37 CFR 1.135(c) before the initial reply (as corrected) can be treated on its merits. In addition, 37 CFR 1.704(c)(7) provides that in such a case the period of adjustment set forth in 37 CFR 1.703 shall be reduced by the number of days, if any, beginning on the day after the date the reply having an omission was filed and ending on the date that the reply or other paper correcting the omission was filed. The reference to 37 CFR 1.135(c) is parenthetical because 37 CFR 1.704(c)(7) is not limited to Office actions under 37 CFR 1.135(c) but applies when the Office issues any action or notice indicating that a reply has an omission which must be corrected: e.g., (1) a decision on a petition under 37 CFR 1.47 dismissing the petition as lacking an item necessary to grant the petition; or (2) a notice indicating that the computer readable format sequence listing filed in reply to a Notice to Comply with Requirements for Patent Applications Containing Nucleotide Sequence and/or Amino Acid Sequence Disclosures (PTO-1661) does not comply with 37 CFR 1.821 et seq..

On March 24, 2006, applicants filed a reply to the Notice to File Missing Parts of Nonprovisional Application, mailed August 24, 2005. As disclosed by applicants, this reply was filed 120 days after the date that is three months after the mailing date of the Notice. Pursuant to 37 CFR 1.704(b), a period of reduction of 120 days was entered. However, applicants were

advised that the March 24, 2006 reply was not fully responsive in a Notice to Comply with Requirements for Patent Applications Containing Nucleotide Sequence and/or Amino Acid Sequence Disclosures ("Notice to Comply"). The response correcting the omission was not filed until April 14, 2006. The 21 day period of reduction is calculated beginning on the day after the date the initial reply was filed, March 25, 2006, and ending on the date that a complete reply to the original Notice was filed, April 14, 2006. Thus, entry of a period of reduction of 21 days pursuant to 37 CFR 1.704(c)(7) was warranted. The PAIR PTA Calculations for the application currently combines the two reductions of 120 days under 37 CFR 1.704(b) and 21 days under 37 CFR 1.704(c)(7) into one reduction of 141 days.

In view of the above discussion, the determination of patent term adjustment at the time of the mailing of the notice of allowance remains one hundred fifty-eight (158) days (432 days of Office delay, reduced by 274 days of Applicant delay).

Receipt of the $200.00 fee set forth in 37 CFR 1.18(e) is acknowledged. No additional fees are required for the petition under 37 CFR 1.705(b).

The application is being forwarded to the Office of Data Management for issuance of a patent. The patent term adjustment indicated on the patent (as shown on the Issue Notification mailed about three weeks prior to patent issuance) will include any additional adjustment accrued both for Office delay in issuing the patent more than four months after payment of the issue fee and satisfaction of all outstanding requirements, and for the Office taking in excess of three years to issue the patent (to the extent that the three-year period does not overlap with periods already accorded).

Telephone inquiries specific to this matter should be directed to Shirene Willis Brantley, Senior Petitions Attorney, at (571) 272-3230.

Anthony Knight
Director
Office of Petitions

UNITED STATES PATENT AND TRADEMARK OFFICE

Commissioner for Patents
United States Patent and Trademark Office
P.O. Box 1450
Alexandria, VA 22313-1450
www.uspto.gov

PATTERSON & SHERIDAN, L.L.P.
3040 POST OAK BOULEVARD
SUITE 1500
HOUSTON TX 77056

COPY MAILED

SEP 2 6 2005

OFFICE OF PETITIONS

In re Application of	:	
Tamasi et al.	:	
Application No. 11/145,143	:	DECISION REFUSING STATUS
Filed: June 3, 2005	:	UNDER 37 CFR 1.47(a)
Attorney Docket No. NVDA/P001581	:	
Title: SYSTEM AND METHOD FOR	:	
IMPROVING THE YIELD OF INTEGRATED	:	
CIRCUITS CONTAINING MEMORY		

This is in response to the petition filed under 37 CFR 1.47(a) on September 8, 2005 (certificate of mailing September 6, 2005).

The petition under 37 CFR. §1.47(a) is **DISMISSED**.

Rule 47 applicant is given TWO MONTHS from the mailing date of this decision to reply, correcting the below-noted deficiencies. Any reply should be entitled "Request for Reconsideration of Petition Under 37 CFR. §1.47(a)," and should only address the deficiencies noted below, except that the reply may include an oath or declaration executed by the non-signing inventor. **Failure to respond will result in abandonment of the application**. Any extensions of time will be governed by 37 CFR. §1.136(a).

The above-identified application was filed on June 3, 2005, without an executed oath or declaration. Accordingly, on July 6, 2005, applicant was mailed a "Notice to File Missing Parts of Nonprovisional Application - Filing Date Granted," requiring for the purposes of this decision an executed oath or declaration in compliance with §1.63, and a surcharge for its late filing. This Notice set an extendable two-month period for reply of September 6, 2005.

In reply, applicant filed a petition, the surcharge for late filing of the declaration and the statement of facts. In support of the petition, applicants submitted a copy of federal express receipts and correspondence mailed to non-signing inventor.

A grantable petition under 37 CFR. §1.47(a) requires: (1) proof that the non-signing inventor cannot be reached or refuses to sign the oath or declaration after having been

presented with the application papers (specification, claims and drawings); (2) an acceptable oath or declaration in compliance with 35 U.S.C. §§115 and 116; (3) the petition fee; and (4) a statement of the last known address of the non-signing inventor.

The instant petition does not satisfy requirement (2).

As to item (2), the declaration submitted is not in compliance with 37 CFR 1.63 . Rule 47 applicant failed to provide the citizenship of all of the inventors pursuant to 37 CFR 1.63 (a)(3). Specifically, petitioner failed to provide the citizenship of inventor Vegesena. On renewed petition, a newly executed declaration is required.

Further correspondence with respect to this matter should be addressed as follows:

By mail:	Mail Stop Petition Commissioner for Patents P.O. Box 1450 Alexandria, VA 22313-1450
By facsimile:	(571) 273-8300
By delivery service: (FedEx, UPS, DHL, etc.)	U.S. Patent and Trademark Office Customer Service Window, Randolph Building 401 Dulany Street Alexandria, VA 22314

Telephone inquiries related to this decision may be directed to the undersigned at (571) 272-3215.

Charlema R. Grant

Charlema R. Grant
Petitions Attorney
Office of Petitions

UNITED STATES PATENT AND TRADEMARK OFFICE

Commissioner for Patents
United States Patent and Trademark Office
P.O. Box 1450
Alexandria, VA 22313-1450
www.uspto.gov

PATTERSON & SHERIDAN, L.L.P.
3040 POST OAK BOULEVARD
SUITE 1500
HOUSTON TX 77056

COPY MAILED

FEB 0 2 2006

OFFICE OF PETITIONS

In re Application of
Anthony M. Tamasi, Oren Rubstein, Srihari Vegesna, Jue Wu and Sean Treichler
Application No.11/145,143
Filed: June 3, 2005
Attorney Docket No. NVDA/P001581
Title of Invention: SYSTEM AND METHOD FOR IMPROVING THE YIELD OF INTEGRATED CIRCUITS CONTAINING MEMORY

DECISION GRANTING STATUS

UNDER 37 CFR 1.47(A)

This is in response to the renewed petition under 37 CFR 1.47(a) filed December 9, 2005.

The petition is GRANTED.

Petitioner has shown that the non-signing inventor Vegesna can not be reached or located and diligent effort has been used to locate the inventor. The efforts outlined by petitioner demonstrate diligent effort was used to attempt to locate non-signing inventor.

The above-identified application and papers have been reviewed and found in compliance with 37 CFR 1.47(a). This application is hereby accorded Rule 1.47(a) status.

As provided in Rule 1.47(c), this Office will forward notice of this application's filing to the non-signing inventor at the address given in the petition. Notice of the filing of this application will also be published in the Official Gazette.

After this decision is mailed, the application will be forwarded to the Office of Initial Patent Examination for further processing.

Telephone inquiries regarding this communication should be directed to the undersigned at (571) 272-3215.

Charlema R. Grant
Petitions Attorney
Office of Petitions

UNITED STATES PATENT AND TRADEMARK OFFICE

UNITED STATES DEPARTMENT OF COMMERCE
United States Patent and Trademark Office
Address: COMMISSIONER FOR PATENTS
P.O. Box 1450
Alexandria, Virginia 22313-1450
www.uspto.gov

MCDONNELL BOEHNEN HULBERT & BERGHOFF LLP
300 S. WACKER DRIVE
32ND FLOOR
CHICAGO, IL 60606

Mail Date: 04/21/2010

Applicant	: Sambaiah Thota	: DECISION ON REQUEST FOR
Patent Number	: 7569580	: RECALCULATION of PATENT
Issue Date	: 08/04/2009	: TERM ADJUSTMENT IN VIEW
Appliction No	: 11/145,144	: OF WYETH AND NOTICE OF INTENT TO
Filed	: 06/03/2005	: ISSUE CERTIFICATE OF CORRECTION
		:

The Request for Recalculation is **GRANTED** to the extent indicated.

The patent term adjustment has been determined to be **896** days. The USPTO will *sua sponte* issue a certificate of correction reflecting the amount of PTA days determined by the recalculation.

Prior to the issuance of the certificate of correction, the USPTO will afford patentee an opportunity to be heard and request reconsideration. Accordingly, patentee has **one month or thirty (30) days**, whichever is longer, to file a request for reconsideration of this patent term adjustment calculation. See 35 U.S.C. 154(b)(3)(B)(ii) and 37 CFR 1.322(a)(4). No extensions of time will be granted under 37 CFR 1.136.

Patentee should use document code PET.OP if electronically filing a request for reconsideration of this patent term adjustment calculation. The patentee must also include the information required by 37 CFR 1.705(b)(2) and the fee required by 37 CFR 1.18(e). If patentee does not file a timely request for reconsideration of this patent term adjustment calculation including the information required by 37 CFR 1.705(b)(2) and the fee required by 37 CFR 1.18(e), the USPTO will issue a certificate of correction reflecting the PTA determination noted above.

Patentee should be aware that in order to preserve the right to review in the United States District Court for the District of Columbia of the USPTO patent term adjustment determination, patentee must ensure that he or she also take the steps required under 35 U.S.C. 154(b)(4)(A) in a timely manner. Nothing in the request for recalculation should be construed as providing an alternative time frame for commencing a civil action under 35 U.S.C. 154(b)(4)(A).

Any questions concerning this decision should be directed to the Office of Patent Legal Administration at 571-272-7702.

SPE RESPONSE FOR CERTIFICATE OF CORRECTION

Paper No.:20090323

DATE : March 23, 2009

TO SPE OF : ART UNIT 1621

SUBJECT : Request for Certificate of Correction on Patent No.: 7342131

A response is requested with respect to the accompanying request for a certificate of correction.

Please complete this form and return with file, within **7** days to:
Certificates of Correction Branch - ST (South Tower) 9A22
Palm location **7590** - Tel. No. (703) 305-8309

With respect to the change(s) requested, correcting Office and/or Applicant's errors, should the patent read as shown in the certificate of correction? No new matter should be introduced, nor should the scope or meaning of the claims be changed.

Thank You For Your Assistance **Certificates of Correction Branch**

The request for issuing the above-identified correction(s) is hereby:

Note your decision on the appropriated box.

☐ **Approved** All changes apply.

☒ **Approved in Part** Specify below which changes **do not** apply.

☐ **Denied** State the reasons for denial below.

Comments:

Changes in the claims are approved. The change on the face of the patent is denied. Note that to change a patent term adjustment the patentee is required to submit a duty of candor and good faith letter regarding the patent term adjustment, which should state something like:

In accordance with Applicants duty of candor and good faith to the U.S. Patent and Trademark Office, Applicants note that the XXX days of patent term adjustment indicated on the Notice of Allowance mailed on XXX X, 200X for the above-captioned application disagrees with the Applicants' own calculation of Patent Term Adjustment. It is hereby requested that the Patent Office verify the calculation of the Patent Term Adjustment for the present application. Applicant believes that the discrepancy arises because XXX. In accordance with this discrepancy, Applicants are entitled to XXX days of Patent Term Adjustment.

SPE RESPONSE FOR CERTIFICATE OF CORRECTION

Comments:
/DANIEL M SULLIVAN/ Supervisory Patent Examiner.Art Unit 1621

UNITED STATES PATENT AND TRADEMARK OFFICE

Commissioner for Patents
United States Patent and Trademark Office
P.O. Box 1450
Alexandria, VA 22313-1450
www.uspto.gov

Paper No.

FINNEGAN, HENDERSON, FARABOW,
GARRETT & DUNNER LLP
901 NEW YORK AVENUE, NW
WASHINGTON DC 20001-4413

COPY MAILED

MAY 29 2009

OFFICE OF PETITIONS

In re Patent No. 7,342,131	:
Xiang et al	: LETTER REGARDING
Issue Date: March 11, 2008	: PATENT TERM ADJUSTMENT
Application No. 11/145,159	: and
Filed: June 3, 2005	: NOTICE OF INTENT TO ISSUE
Atty Docket No. 08981.0005-00000	: CERTIFICATE OF CORRECTION
	:

This is in response to the "REQUEST FOR CERTIFICATE OF CORRECTION," filed May 19, 2008. Pursuant to their duty of good faith and candor to the Office, patentees disclose that the total patent term adjustment should be ninety-four (94) days.

The request for review of the patent term adjustment is **GRANTED**.

The patent term adjustment indicated in the patent is to be corrected by issuance of a certificate of correction showing a revised Patent Term Adjustment of ninety-four **(94)** days.

Preliminarily, it is noted that patentees set forth this request in a Request for Certificate of Correction directed also to correcting a mistake in the claims. No candor letter was submitted. This is not the proper procedure. Rather, a (no-fee) candor letter directed to the Office of Petitions, pursuant to Comment 43 is the appropriate vehicle for disclosing an error in patentees' favor in the patent term adjustment. See Comment 43, *Changes to Implement Patent Term Adjustment under Twenty-Year Patent Term; Final Rule*, 65 Fed. Reg. 56366 (September 18, 2000). This is true even where as here you are disclosing an error in the revised patent term adjustment indicated on the face of the patent.

Consideration now turns to the merits of the request. On May 27, 2008, the application matured into U.S. Patent No. 7,342,131, with a revised patent term adjustment of 95 days. In response, patentees filed the instant request. Patentees disclose that the revised patent term adjustment should be 94 days. Patentees do not state a basis for this disclosure.

Nonetheless, a review of the record reveals the basis for the disclosure. A review of the record confirms that the response after non-final Office action was filed on March 15, 2007, not March 14, 2007. Thus, the period of reduction is 19 days, not 18 days. As applicants took three months and 19, not 18, days to file the response to the non-final rejection mailed November 24, 2006. Pursuant to §1.704(b), the period of reduction of 18 days is being removed and the period of reduction of 19 days is being entered.

In view thereof, the patent should have issued with a revised patent term adjustment of ninety-four (94) days (113 of Office delay reduced by 19 days of applicant delay).

As this letter was submitted as an advisement to the Office of an error in Patentee's favor, the Office will not assess the $200.00 fee under 37 CFR 1.18(e). The Office thanks patentee for their good faith and candor in bringing this to the attention of the Office.

The Certificate of Correction Branch has been advised of this decision. The application is thereby forwarded to the Certificates of Correction Branch for issuance of a certificate of correction in order to rectify this error. The Office will issue a certificate of correction indicating that the term of the above-identified patent is extended or adjusted by ninety-four **(94)** days (subject to any terminal disclaimer).

Telephone inquiries specific to this matter should be directed to the undersigned at (571) 272-3219.

Nancy Johnson

Nancy Johnson
Senior Petitions Attorney
Office of Petitions

Enclosure: DRAFT Certificate of Correction

UNITED STATES PATENT AND TRADEMARK OFFICE

CERTIFICATE OF CORRECTION

PATENT : 7,342,131B2

DATED : **March 11, 2008** **DRAFT**

INVENTOR(S) : Xiang et al.

It is certified that error appears in the above-identified patent and that said Letters Patent is hereby corrected as shown below:

On the cover page,

[*] Notice: Subject to any disclaimer, the term of this patent is extended or adjusted under 35 USC 154(b) by 95 days

Delete the phrase "by 95 days" and insert – by 94 days--

UNITED STATES PATENT AND TRADEMARK OFFICE

Commissioner for Patents
United States Patent and Trademark Office
P.O. Box 1450
Alexandria, VA 22313-1450
www.uspto.gov

JJGJr: 08-06

Paper No: __

COPY MAILED
AUG 17 2006
OFFICE OF PETITIONS

ROBERT PLATT BELL
8033 WASHINGTON ROAD
ALEXANDRIA VA 22308

In re Application of
Breen, et al. :
Application No. 11/145,170 : ON PETITION
Filed: 6 June, 2005 :
Attorney Docket No.:RANN-0020 :

This is a decision on the petition filed (with fee) on 18 April, 2006, under 37 C.F.R. §1.182 to correct the order of inventorship to be consistent with the signed oath/declaration.

The petition is **GRANTED**.

A corrected filing receipt is enclosed to reflect the order of inventorship as corrected consistent with that requested by Petitioner Robert P. Bell (Reg. No. 34,546), as follows:

Thomas J. Breen
Alexander E. Smith

Petitioner is reminded to submit a corrected and supplemental Application Data Sheet (ADS), consistent with the commentary at MPEP §605.04(f), setting forth the corrected order of inventors and their respective residencies.

Petitioner is given one (1) month, and not less than 30 days, to accomplish this task.

These materials must be directed to the Technology Center, not the Office of Petitions.

This application is being released to OIPE for such processing as is required before being forwarded for substantive examination in due course.

While telephone inquiries regarding this decision may be directed to the undersigned at (571) 272-3214, it is noted that all practice before the Office is in writing (see: 37 C.F.R. §1.2[1]) and the proper authority for action on any matter in this regard are the statutes (35 U.S.C.), regulations (37 C.F.R.) and the commentary on policy (MPEP). Therefore, no telephone discussion may be controlling or considered authority for Petitioner's action(s).

John J. Gillon, Jr.
Senior Attorney
Office of Petitions

ENCL: Prior Rec.

[1] The regulations at 37 C.F.R. §1.2 provide:
§1.2 Business to be transacted in writing.
All business with the Patent and Trademark Office should be transacted in writing.The personal attendance of applicants or their attorneys or agents at the Patent and Trademark Office is unnecessary. The action of the Patent and Trademark Office will be based exclusively on the written record in the Office. No attention will be paid to any alleged oral promise, stipulation,or understanding in relation to which there is disagreement or doubt.

UNITED STATES PATENT AND TRADEMARK OFFICE

Commissioner for Patents
United States Patent and Trademark Office
P.O. Box 1450
Alexandria, VA 22313-1450
www.uspto.gov

MORRISON & FOERSTER LLP
1650 TYSONS BOULEVARD, SUITE 400
MCLEAN VA 22102

COPY MAILED

NOV 0 5 2007

OFFICE OF PETITIONS

In re Application of

SCHLOSSER, et al.
Application No. 11/145,174
Filed: June 6, 2005
Attorney Docket No. **543822014900**

DECISION ON PETITION
TO WITHDRAW
FROM RECORD

This is a decision on the Request to Withdraw as attorney or agent of record under 37 C.F.R. § 1.36(b), filed May 9, 2007.

The request is **APPROVED.**

A grantable request to withdraw as attorney/agent of record must be signed by every attorney/agent seeking to withdraw or contain a clear indication that one attorney is signing on behalf of another/others. A request to withdraw will not be approved unless at least 30 (thirty) days would remain between the date of approval and the later of the expiration date of a time to file a response or the expiration date of the maximum time period which can be extended under 37 C.F.R. § 1.136(a).

The request was signed by Deborah S. Gladstein on behalf of all attorneys of record. All attorneys/agents associated have been withdrawn. Applicant is reminded that there is no attorney of record at this time.

The request to change the correspondence of record is not acceptable as the requested correspondence address is not that of: (1) the first named signing inventor; or (2) an intervening assignee of the entire interest under 37 C.F.R 3.71. All future communications from the Office will be directed to the first named signing inventor at the first copied address below until otherwise properly notified by the applicant.

There is an outstanding final Office action mailed September 25, 2007 that requires a reply from the applicant.

Telephone inquiries concerning this decision should be directed to the undersigned at (571) 272-7253.

Monica A. Graves
Petitions Examiner
Office of Petitions

cc: **TILL SCHLOSSER**
ZUM KIEFERNHANG 3C
DRESDEN, GERMANY 01109

cc: **GERO G. MCCLELLAN**
PATTERSON & SHERIDAN, LLP
3040 POST OAK BOULEVARD, SUITE 1500
HOUSTON, TX 77056

SPE RESPONSE FOR CERTIFICATE OF CORRECTION

DATE : 8/27/09

Paper No.: —

TO SPE OF : ART UNIT 2874

SUBJECT : Request for Certificate of Correction for Appl. No.: 11/145182 Patent No.: 7391942 B2

Please respond to this request for a certificate of correction within 7 days.

FOR IFW FILES:

Please review the requested changes/corrections as shown in the **COCIN** document(s) in the IFW application image. No new matter should be introduced, nor should the scope or meaning of the claims be changed.

Please complete the response (see below) and forward the completed response to scanning using document code **COCX**.

FOR PAPER FILES:

Please review the requested changes/corrections as shown in the attached certificate of correction. Please complete this form (see below) and forward it with the file to:

Certificates of Correction Branch (C of C)
Randolph Square 9D62-B
Palm Location 7580

Virginia Tolbert
Certificates of Correction Branch
703-756-1591

Thank You For Your Assistance

The request for issuing the above-identified correction(s) is hereby:
Note your decision on the appropriate box.

- ☒ **Approved** — **All** changes apply.
- ☐ **Approved in Part** — Specify below which changes **do not** apply.
- ☐ **Denied** — State the reasons for denial below.

Comments: The corrections do not introduce new matter or change the scope and/or meaning of the claims, and are therefore approved in full.

/UYEN-CHAU N. LE/ — **SPE**

2874 — **Art Unit**

UNITED STATES PATENT AND TRADEMARK OFFICE

COMMISSIONER FOR PATENTS
UNITED STATES PATENT AND TRADEMARK OFFICE
P.O. BOX 1450
ALEXANDRIA, VA 22313-1450
www.uspto.gov

AMGEN INC.
LAW DEPARTMENT
1201 AMGEN COURT WEST
SEATTLE WA 98119

MAILED

MAY 20 2009

OFFICE OF PETITIONS

In re Patent No. 7,459,291	:	
NAKAYAMA et al.	:	DECISION ON REQUEST FOR
Issue Date: December 2, 2008	:	RECONSIDERATION OF
Application No. 11/145,198	:	PATENT TERM ADJUSTMENT
Filed: June 3, 2005	:	
Attorney Docket No. A-629-US-DIV4	:	

This is a decision on the "PETITION UNDER 37 CFR 1.705(d) FOR DETERMINATION OF PATENT TERM ADJUSTMENT UNDER 35 U.S.C. 154(b)(1)(A) and (B)", filed February 2, 2009, requesting that the patent term adjustment determination for the above-identified patent be changed from three hundred thirty-five (335) days to five hundred sixteen (516) days.

The request for reconsideration of patent term adjustment is **DISMISSED**.

On December 2, 2008, the above-identified application matured into US Patent No. 7,459,291 with a patent term adjustment of 335 days. This request for reconsideration of patent term adjustment was timely filed within two months of the issue date of the patent. See 37 CFR 1.705(d).

Patentees request recalculation of the patent term adjustment based on the decision in Wyeth v. Dudas, 580 F. Supp. 2d 138, 88 U.S.P.Q. 2d 1538 (D.D.C. 2008). Patentees assert that pursuant to Wyeth, a PTO delay under 35 U.S.C. 154(b)(1)(A) overlaps with a delay under 35 U.S.C. 154(b)(1)(B) only if the delays occur on the same day. Patentees maintain that the period of adjustment due to the Three Year Delay by the Office, pursuant to 37 CFR 1.703(b), and the period of adjustment due to examination delay,

pursuant to 37 CFR 1.702(a), do not overlap as these periods do not occur on the same day.

Initially, the Office notes that patentees incorrectly calculated the period of adjustment under 37 CFR 1.702(b) as 181 days. Pursuant to 37 CFR 1.703(b), the correct period of adjustment is 182 days, counting the number of days in the period beginning on the day after the date that is three years after the date on which the application was filed under 35 U.S.C. 111(a), June 4, 2008, and ending on the date a patent was issued, December 2, 2008. "When a period is indicated (in 37 CFR 1.703 or 1.704) as 'beginning' on a particular day, that day is included in the period, in that such day is 'day one' of the period and not 'day zero.'" MPEP 2731. "For example, a period beginning on April 1 and ending on April 10 is ten (and not nine) days in length." Id.

Patentees assert that in addition to this 182-day period, they are entitled to a period of adjustment due to examination delay pursuant to 37 CFR 1.702(a) of 425 days for the failure by the Office to mail at least one of a notification under 35 U.S.C. 132 not later than fourteen months after the date on which the application was filed under 35 U.S.C. 111(a), pursuant to 37 CFR 1.702(a)(1). A nonfinal Office action was mailed on October 2, 2007, 14 months and 425 days after the application was filed on June 3, 2005.

Under 37 CFR 1.703(f), patentees are entitled to a period of patent term adjustment equal to the period of delays based on the grounds set forth in 37 CFR 1.702 reduced by the period of time equal to the period of time during which patentees failed to engage in reasonable efforts to conclude prosecution pursuant to 37 CFR 1.704. In other words, patentees are entitled to the period of Office delay reduced by the period of applicant delay. Patentees do not dispute the period of reduction of 90 days for applicant delay.

Patentees do not dispute that the total period of Office delay is the sum of the period of Three Years Delay (182 days) and the period of Examination Delay (425 days) to the extent that these periods of delay are not overlapping. However, in effect, patentees contend that no portion of the Three Year Delay period overlaps with the period of 14-month examination delay. Accordingly, patentees submit that the total period of

adjustment for Office delay is 607 days, which is the sum of the period of Three Year Delay (182 days) and the period of Examination Delay (425 days), reduced by the period of overlap (0 days). As such, patentees assert entitlement to a patent term adjustment of 517 days (182 + 425 reduced by 0 overlap - 90 (applicant delay)).

The Office agrees that as of the issuance of the patent on December 2, 2008, the application was pending three years and 182 days after its filing date. The Office agrees that the action detailed above was not taken within the specified time frame, and thus, the entry of a period of adjustment of 425 days is correct. At issue is whether patentees should accrue 182 days of patent term adjustment for the Office taking in excess of three years to issue the patent, as well as 425 days for Office failure to take a certain action within a specified time frame (or examination delay).

The Office contends that 182 days overlap. Patentees' calculation of the period of overlap is inconsistent with the Office's interpretation of this provision. 35 U.S.C. 154(b)(2)(A) limits the adjustment of patent term, as follows:

> to the extent that the periods of delay attributable to grounds specified in paragraph (1) overlap, the period of any adjustment granted under this subsection shall not exceed the actual number of days the issuance of the patent was delayed.

Likewise, 35 CFR 1.703(f) provides that:

> To the extent that periods of delay attributable to the grounds specified in § 1.702 overlap, the period of adjustment granted under this section shall not exceed the actual number of days the issuance of the patent was delayed.

As explained in *Explanation of 37 CFR 1.703(f) and of the United States Patent and Trademark Office Interpretation of 35 U.S.C. 154(b)(2)(A)*, 69 Fed. Reg. 34283 (June 21, 2004), the Office interprets 35 U.S.C. 154(b)(2)(A) as permitting either patent term adjustment under 35 U.S.C. 154(b)(1)(A)(i)-(iv), or patent term adjustment under 35 U.S.C. 154(b)(1)(B), but not as permitting patent term adjustment under both 35 U.S.C.

154(b)(1)(A)(i)-(iv) and 154(b)(1)(B). Accordingly, the Office implements the overlap provision as follows:

> If an application is entitled to an adjustment under 35 U.S.C. 154(b)(1)(B), the entire period during which the application was pending (except for periods excluded under 35 U.S.C. 154(b)(1)(B)(i)-(iii)), and not just the period beginning three years after the actual filing date of the application, is the period of delay under 35 U.S.C. 154(b)(1)(B) in determining whether periods of delay overlap under 35 U.S.C. 154(b)(2)(A). Thus, any days of delay for Office issuance of the patent more than 3 years after the filing date of the application, which overlap with the days of patent term adjustment accorded prior to the issuance of the patent will not result in any additional patent term adjustment. See 35 U.S.C. 154(b)(1)(B), 35 U.S.C. 154(b)(2)(A), and 37 CFR § 1.703(f). See *Changes to Implement Patent Term Adjustment Under Twenty Year Term; Final Rule*, 65 Fed. Reg. 56366 (Sept. 18, 2000). See also *Revision of Patent Term Extension and Patent Term Adjustment Provisions; Final Rule*, 69 Fed. Reg. 21704 (April 22, 2004), 1282 Off. Gaz. Pat. Office 100 (May 18, 2004). See also *Explanation of 37 CFR 1.703(f) and of the United States Patent and Trademark Office Interpretation of 35 U.S.C. 154(b)(2)(A)*, 69 Fed. Reg. 34283 (June 21, 2004).

The current wording of § 1.703(f) was revised in response to the misinterpretation of this provision by a number of Patentees. The rule was slightly revised to more closely track the corresponding language of 35 U.S.C. 154(b)(2)(A). The relevant portion differs only to the extent that the statute refers back to provisions of the statute whereas the rule refers back to sections of the rule. This was not a substantive change to the rule nor did it reflect a change of the Office's interpretation of 35 U.S.C. 154(b)(2)(A). As stated in the *Explanation of 37 CFR 1.703(f) and of the United States Patent and Trademark Office Interpretation of 35 U.S.C. 154(b)(2)(A)*, the Office has consistently taken the position that if an application is entitled to an adjustment under the three-year pendency provision of 35 U.S.C. 154(b)(1)(B), the entire period during which the application was pending before the Office (except for periods excluded under 35 U.S.C. 154(b)(1)(B)(i)-(iii)), and not

just the period beginning three years after the actual filing date of the application, is the relevant period under 35 U.S.C. 154(b)(1)(B) in determining whether periods of delay "overlap" under 35 U.S.C. 154(b)(2)(A).

This interpretation is consistent with the statute. Taken together the statute and rule provide that to the extent that periods of delay attributable to grounds specified in 35 U.S.C. 154(b)(1) and in corresponding § 1.702 overlap, the period of adjustment granted shall not exceed the actual number of days the issuance of the patent was delayed. The grounds specified in these sections cover the A) guarantee of prompt Patent and Trademark Office responses, B) guarantee of no more than 3-year application pendency, and C) guarantee or adjustments for delays due to interference, secrecy orders and appeals. A section by section analysis of 35 U.S.C. 154(b)(2)(A) specifically provides that:

> Section 4402 imposes limitations on restoration of term. In general, pursuant to [35 U.S.C.] 154(b)(2)(A)-(C), total adjustments granted for restorations under [35 U.S.C. 154](b)(1) are reduced as follows: (1) To the extent that there are multiple grounds for extending the term of a patent that may exist simultaneously (e.g., delay due to a secrecy order under [35 U.S.C.] 181 and administrative delay under [35 U.S.C.] 154(b)(1)(A)), the term should not be extended for each ground of delay but only for the actual number of days that the issuance of a patent was delayed; See 145 Cong. Rec. S14,718[1]

As such, the period for over three-year pendency does not overlap only to the extent that the actual dates in the period beginning three years after the date on which the application was filed overlap with the actual dates in the periods for failure of the Office to take action within specified time frames. In other words, consideration of the overlap does not begin three years after the filing date of the application.

---

[1] The AIPA is title IV of the Intellectual Property and Communications Omnibus Reform Act of 1999 (S. 1948), which was incorporated and enacted as law as part of Pub. L. 106-113. The Conference Report for H.R. 3194, 106th Cong. 1st Sess. (1999), which resulted in Pub. L. 106-113, does not contain any discussion (other than the incorporated language) of S. 1948. A section-by-section analysis of S. 1948, however, was printed in the Congressional Record at the request of Senator Lott, See 145 Cong. Rec. S14,708-26 (1999)(daily ed. Nov. 17, 1999).

In this instance, the relevant period under 35 U.S.C. 154(b)(1)(B) in determining whether periods of delay "overlap" under 35 U.S.C. 154(b)(2)(A) is the entire period during which the application was pending before the Office, June 3, 2005, to the date the patent issued on December 2, 2008. Prior to the issuance of the patent, 425 days of patent term adjustment were accorded for the Office failing to respond within a specified time frame during the pendency of the application. All of the 182 days for Office delay in issuing the patent overlap with the 425 days of Office delay. During that time, the issuance of the patent was delayed by 425 days, not 425 + 182 days. The Office took 14 months and 425 days to issue a first Office action. Otherwise, the Office took all actions set forth in 37 CFR 1.702(a) within the prescribed time frames. Nonetheless, given the 425 days of Office delay and the 90 days of applicant delay and the time allowed within the time frames for processing and examination, the application issued three years and 182 days after its filing date. The Office did not delay 425 days and then an additional 182 days. Accordingly, 425 days of patent term adjustment (not 425 and 182 days) was properly entered because the period of delay of 182 days attributable to the delay in the issuance of the patent overlaps with the adjustment of 425 days attributable to grounds specified in § 1.702(a)(1). Entry of both periods is not warranted.

Accordingly, at issuance, the Office properly entered no additional days of patent term adjustment for the Office taking in excess of three years to issue the patent.

In view thereof, no adjustment to the patent term will be made.

The Office acknowledges submission of the $200.00 fee set forth in 37 CFR 1.18(e). No additional fees are required.

Telephone inquiries specific to this matter should be directed to the undersigned at (571) 272-3211.

Christina Tartera Donnell

Christina Tartera Donnell
Senior Petitions Attorney
Office of Petitions

UNITED STATES PATENT AND TRADEMARK OFFICE

COMMISSIONER FOR PATENTS
UNITED STATES PATENT AND TRADEMARK OFFICE
P.O. BOX 1450
ALEXANDRIA, VA 22313-1450
www.uspto.gov

GENERAL - LAW OFFICE OF JONATHAN HOLLANDER PC
660 4TH STREET #198
SAN FRANCISCO CA 94107

COPY MAILED
MAR 01 2010

In re Application of
Philip Tee, et al.
Application No. 11/145,201
Filed: June 3, 2005
Attorney Docket No. R000410US

DECISION ON PETITION

This is a decision on the petition under the unintentional provisions of 37 CFR 1.137(b), filed June 29, 2009, to revive the above-identified application.

The petition is **GRANTED**.

The application became abandoned for failure to timely file a reply within the meaning of 37 CFR 1.113 to the final Office action of July 28, 2008. The proposed reply required for consideration of a petition to revive must be a Notice of Appeal (and appeal fee required by 37 CFR 41.20(b)(2), an amendment that *prima facie* places the application in condition for allowance, a Request for Continued Examination and submission (37 CFR 1.114), or the filing of a continuing application under 37 CFR 1.53(b). See MPEP 711.03(c)(III)(A)(2). No extensions of time pursuant to the provisions of 37 CFR 1.136(a) were obtained. Accordingly, the application became abandoned at midnight on October 28, 2008.

The petition satisfies the requirements of 37 CFR 1.137(b) in that petitioner has supplied (1) the reply in the form of a Request for Continued Examination (RCE) and fee of $810.00, and the submission required by 37 CFR 1.114; (2) the petition fee of $1,620.00; and (3) a proper statement of unintentional delay.

The Revocation Power of Attorney and Certificate under 3.73(b) filed with the instant petition have been accepted.

Telephone inquiries concerning this decision should be directed to the undersigned at (571) 272-3213.

This application is being referred to Technology Center AU 2169 for processing of the RCE and for appropriate action by the Examiner in the normal course of business on the amendment submitted in accordance with 37 CFR 1.114.

Cheryl Gibson-Baylor
Petitions Examiner
Office of Petitions

UNITED STATES PATENT AND TRADEMARK OFFICE

UNITED STATES DEPARTMENT OF COMMERCE
United States Patent and Trademark Office
Address: COMMISSIONER FOR PATENTS
P.O. Box 1450
Alexandria, Virginia 22313-1450
www.uspto.gov

APPLICATION NUMBER	FILING OR 371(C) DATE	FIRST NAMED APPLICANT	ATTY. DOCKET NO./TITLE
11/145,201	06/03/2005	Philip Tee	49463-01011

CONFIRMATION NO. 2265

POA ACCEPTANCE LETTER

71862
GENERAL - LAW OFFICE OF JONATHAN HOLLANDER PC
660 4TH STREET #198
SAN FRANCISCO, CA 94107

OC000000040345802

Date Mailed: 03/01/2010

NOTICE OF ACCEPTANCE OF POWER OF ATTORNEY

This is in response to the Power of Attorney filed 06/29/2009.

The Power of Attorney in this application is accepted. Correspondence in this application will be mailed to the above address as provided by 37 CFR 1.33.

/cpgibson baylor/

Office of Data Management, Application Assistance Unit (571) 272-4000, or (571) 272-4200, or 1-888-786-0101

UNITED STATES PATENT AND TRADEMARK OFFICE

Commissioner for Patents
United States Patent and Trademark Office
P.O. Box 1450
Alexandria, VA 22313-1450
www.uspto.gov

SCHMEISER, OLSEN & WATTS
22 CENTURY HILL DRIVE
SUITE 302
LATHAM NY 12110

MAILED

FEB 27 2009

OFFICE OF PETITIONS

In re Application of
Schupp
Application No.: 11/145,205
Filed: June 3, 2005
Attorney Docket No.: SCHU-4273
For: AIR TREATMENT APPARATUS AND METHOD OF USE THEREOF

ON PETITION

This is a decision on the petition under 37 CFR 1.137(b), filed January 14, 2009, to revive the above-identified application.

The petition is **granted**.

The two-month period for filing an appeal brief under 37 CFR 41.37 (accompanied by the fee required by 37 CFR 41.20(b)(2)), runs from the date of this decision.

This application became abandoned for failure to timely file a proper reply within the meaning of 37 CFR 1.113 to the final Office action of May 13, 2008. An amendment, filed July 14, 2008, failed to place this application in *prima facie* condition for allowance, as was explained in the July 25, 2008 Advisory action. An amendment, filed August 11, 2008, failed to place this application in *prima facie* condition for allowance, as was explained in the November 18, 2008 Advisory action. No extensions of time were obtained pursuant to 37 CFR 1.136(a). Therefore, this application became abandoned on August 14, 2008. The filing of the present petition precedes the mailing of A Notice of Abandonment.

The proposed reply required for consideration of a petition to revive must be a Notice of Appeal (and appeal fee required by 37 CFR 41.20(b)(2)), an amendment that *prima facie* places the application in condition for allowance, a Request for Continued Examination (RCE) and submission (37 CFR 1.114), or the filing of a continuing application under 37 CFR 1.53(b). See MPEP 711.03(c)(III)(A)(2).

The petition satisfies the requirements of 37 CFR 1.137(b) in that petitioner has supplied (1) the reply in the form of a Notice of Appeal; (2) the petition fee of $810.00; and (3) a proper statement of unintentional delay.

After the mailing of this decision, the file will be forwarded to Technology Center AU 1797 to await receipt of the appeal brief.

Telephone inquiries concerning this matter may be directed to the undersigned at (571) 272-3230.

Shirene Willis Brantley
Petitions Attorney
Office of Petitions

UNITED STATES PATENT AND TRADEMARK OFFICE

Commissioner for Patents
United States Patent and Trademark Office
P.O. Box 1450
Alexandria, VA 22313-1450
www.uspto.gov

CAHN & SAMUELS, LLP
2000 P STREET, N.W., SUITE 200
WASHINGTON, D.C. 20036

COPY MAILED
JUN 0 2 2006
OFFICE OF PETITIONS

In re Application of	:	
Harry B. Smith	:	
Application No. 11/145,215	:	DECISION ON PETITION
Filed: June 6, 2005	:	TO MAKE SPECIAL UNDER
Attorney Docket No. 802.0002DIV2	:	37 CFR 1.102(c)(1)
	:	

This is a decision on the petition under 37 CFR 1.102(c)(1), filed April 6, 2006, to make the above-identified application special based on applicant's age as set forth in M.P.E.P. § 708.02, Section IV.

The petition is **GRANTED**.

A grantable petition to make an application special under 37 CFR 1.102(c)(1) and MPEP § 708.02, Section IV: Applicant's Age must be accompanied by evidence showing that at least one of the applicants is 65 years of age, or more, such as a birth certificate or a statement by applicant. No fee is required

The instant petition includes a statement from Inventor Harry B. Smith stating that he is over 65 years of age. Accordingly, the above-identified application has been accorded "special" status.

Telephone inquiries concerning this decision should be directed to Irvin Dingle at 571-272-3210.

All other inquiries concerning either the examination or status of the application should be directed to the Technology Center.

The application is being forwarded to the Technology Center Art Unit 2618 for action on the merits commensurate with this decision.

Irvin Dingle
Petitions Examiner
Office of Petitions

UNITED STATES PATENT AND TRADEMARK OFFICE

Commissioner for Patents
United States Patent and Trademark Office
P.O. Box 1450
Alexandria, VA 22313-1450
www.uspto.gov

CAHN & SAMUELS, LLP
2000 P STREET, N.W., SUITE 200
WASHINGTON, D.C. 20036

COPY MAILED
JUN 0 2 2006
OFFICE OF PETITIONS

In re Application of	:	
Harry B. Smith	:	
Application No. 11/145,216	:	DECISION ON PETITION
Filed: June 6, 2005	:	TO MAKE SPECIAL UNDER
Attorney Docket No. 802.0002DIV	:	37 CFR 1.102(c)(1)
	:	

This is a decision on the petition under 37 CFR 1.102(c)(1), filed April 6, 2006, to make the above-identified application special based on applicant's age as set forth in M.P.E.P. § 708.02, Section IV.

The petition is **GRANTED**.

A grantable petition to make an application special under 37 CFR 1.102(c)(1) and MPEP § 708.02, Section IV: Applicant's Age must be accompanied by evidence showing that at least one of the applicants is 65 years of age, or more, such as a birth certificate or a statement by applicant. No fee is required

The instant petition includes a statement from Inventor Harry B. Smith stating that he is over 65 years of age. Accordingly, the above-identified application has been accorded "special" status.

Telephone inquiries concerning this decision should be directed to Irvin Dingle at 571-272-3210.

All other inquiries concerning either the examination or status of the application should be directed to the Technology Center.

The application is being forwarded to the Technology Center Art Unit 2618 for action on the merits commensurate with this decision.

Irvin Dingle
Petitions Examiner
Office of Petitions

UNITED STATES PATENT AND TRADEMARK OFFICE

Commissioner for Patents
United States Patent and Trademark Office
P.O. Box 1450
Alexandria, VA 22313-1450
www.uspto.gov

MAILED

MAY 11 2010

OFFICE OF PETITIONS

VIDAS, ARRETT & STEINKRAUS, P.A.
SUITE 400
6640 SHADY OAK ROAD
EDEN PRAIRIE MN 55344

In re Patent No. 7,578,841
Issue Date: August 25, 2009
Application No. 11/145,223
Filed: June 6, 2005
Attorney Docket No. S63.2H-12002-US01

:DECISION ON REQUEST FOR
:RECONSIDERATION OF
:PATENT TERM ADJUSTMENT
:AND
:NOTICE OF INTENT TO ISSUE
:CERTIFICATE OF CORRECTION

This is a decision on the "Request for Reconsideration of Patent Term Adjustment, 37 CFR 1.705" filed October 23, 2009. Based upon the decision in Wyeth v. Dudas, 580 F. Supp. 2d 138, 88 U.S.P.Q. 2d 1538 (D.D.C. 2008), Patentees request that the patent term adjustment indicated on the patent be corrected from three hundred twenty one (321) days to seven hundred fifty-four (754) days.

The request for reconsideration of the patent term adjustment indicated on the patent is **GRANTED**.

The patent term adjustment indicated in the patent is to be corrected by issuance of a certificate of correction showing a revised Patent Term Adjustment of seven hundred fifty-four **(754)** days.

Patentee is given THIRTY (30) DAYS or ONE (1) MONTH, whichever is longer, from the mail date of this decision to respond to this decision. No extensions of time will be granted under
§ 1.136.

On August 25, 2009, the above-identified application matured into U.S. Patent No. 7,578,841, with a revised Patent Term Adjustment of 321 days. The instant request for reconsideration filed October 23, 2009 was timely filed within 2 months of the date the patent issued. See § 1.705(d).

The patent term adjustment in the above-identified patent has been reconsidered in light of the Court of Appeals for the Federal Circuit's decision in *Wyeth v. Kappos*, 2009-1120 (Fed. Cir. 1-7-2010). By decision issued January 7, 2010, the Federal Circuit held that "[b]efore the three-year mark, no 'overlap' can transpire between the A delay[1] and the B delay[2] because the B delay has yet to begin or take any effect. If an A

[1] Pursuant to 35 U.S.C. 154(b)(1)(A) for examination delays during the pendency of the application.

delay occurs one day and a B delay occurs on a different day, those two days do not 'overlap' under section 154(b)(2)." (footnotes added). In other words, the Court affirmed the District Court's conclusion that "the only way that [A and B] periods of time can 'overlap' is if they occur on the same day."

In this instance, the "A" delay is calculated from August 7, 2006 to October 15, 2007 for 435 days and from August 1, 2008 to August 12, 2008 for 12 days. On the other hand, 445 days of "B" delay is calculated from June 7, 2008 to August 25, 2009, thus, for the period from August 1, 2008 to August 12, 2008, 12 days, the "A" delay and "B" delay occur on the same days and in accordance with the decision in Wyeth, the periods overlap. As such, applicant is entitled to a patent term adjustment of 754 days (447 + 445 reduced by 12 overlap – 126(applicant delay).

In view thereof, the patent should have issued with a revised patent term adjustment of 754 days.

The Office acknowledges submission of the $200.00 fee set forth in 37 CFR 1.18(e). No additional fees are required.

The application being forwarded to the Certificates of Correction Branch for issuance of a certificate of correction in order to rectify this error. The Office will issue a certificate of correction indicating that the term of the above-identified patent is extended or adjusted by seven hundred fifty-four**(754)** days.

Telephone inquiries specific to this decision should be directed to Senior Petitions Attorney Patricia Faison-Ball at (571) 272-3212.

Anthony Knight
Director
Office of Petitions

Enclosure: Copy of DRAFT Certificate of Correction

---

[2] Pursuant to 35 U.S.C. 154(b)(1)(B) for the Office taking in excess of three years to issue the patent.

DRAFT

UNITED STATES PATENT AND TRADEMARK OFFICE

CERTIFICATE OF CORRECTION

PATENT : 7,578,841 B2

DATED : August 25, 2009

INVENTOR(S) : Amnon Yadin

It is certified that error appears in the above-identified patent and that said Letters Patent is hereby corrected as shown below:

On the cover page,

[*] Notice: Subject to any disclaimer, the term of this patent is extended or adjusted under 35 USC 154(b) by (321) days

Delete the phrase "by 321 days" and insert – by 754 days--

UNITED STATES PATENT AND TRADEMARK OFFICE

UNITED STATES DEPARTMENT OF COMMERCE
United States Patent and Trademark Office
Address: COMMISSIONER FOR PATENTS
P.O. Box 1450
Alexandria, Virginia 22313-1450
www.uspto.gov

Medtronic
Attn: Noreen C. Johnson, IP Legal Department
2600 Sofamor Danek Drive
Memphis, TN 38132

Mail Date: 04/21/2010

Applicant	: Michael C. Sherman	: DECISION ON REQUEST FOR
Patent Number	: 7628800	: RECALCULATION of PATENT
Issue Date	: 12/08/2009	: TERM ADJUSTMENT IN VIEW
Appliction No	: 11/145,238	: OF WYETH AND NOTICE OF INTENT TO
Filed	: 06/03/2005	: ISSUE CERTIFICATE OF CORRECTION
		:

The Request for Recalculation is **GRANTED** to the extent indicated.

The patent term adjustment has been determined to be **61** days. The USPTO will *sua sponte* issue a certificate of correction reflecting the amount of PTA days determined by the recalculation.

Prior to the issuance of the certificate of correction, the USPTO will afford patentee an opportunity to be heard and request reconsideration. Accordingly, patentee has **one month or thirty (30) days**, whichever is longer, to file a request for reconsideration of this patent term adjustment calculation. See 35 U.S.C. 154(b)(3)(B)(ii) and 37 CFR 1.322(a)(4). No extensions of time will be granted under 37 CFR 1.136.

Patentee should use document code PET.OP if electronically filing a request for reconsideration of this patent term adjustment calculation. The patentee must also include the information required by 37 CFR 1.705(b)(2) and the fee required by 37 CFR 1.18(e). If patentee does not file a timely request for reconsideration of this patent term adjustment calculation including the information required by 37 CFR 1.705(b)(2) and the fee required by 37 CFR 1.18(e), the USPTO will issue a certificate of correction reflecting the PTA determination noted above.

Patentee should be aware that in order to preserve the right to review in the United States District Court for the District of Columbia of the USPTO patent term adjustment determination, patentee must ensure that he or she also take the steps required under 35 U.S.C. 154(b)(4)(A) in a timely manner. Nothing in the request for recalculation should be construed as providing an alternative time frame for commencing a civil action under 35 U.S.C. 154(b)(4)(A).

Any questions concerning this decision should be directed to the Office of Patent Legal Administration at 571-272-7702.

UNITED STATES PATENT AND TRADEMARK OFFICE

Commissioner for Patents
United States Patent and Trademark Office
P.O. Box 1450
Alexandria, VA 22313-1450
www.uspto.gov

Robert D. Montgomery
1685 West 12th St
Reno NV 89503

COPY MAILED
OCT 31 2006
OFFICE OF PETITIONS

In re Application of
Robert D. Montgomery
Application No. 11/145,243
Filed: June 6, 2005
Attorney Docket No. 1076

DECISION ON PETITION
TO MAKE SPECIAL UNDER
37 CFR 1.102(c)(1)

This is a decision on the petition under 37 CFR 1.102(c)(1), filed September 7, 2006, to make the above-identified application special based on applicant's age as set forth in M.P.E.P. § 708.02, Section IV.

The petition is **GRANTED**.

A grantable petition to make an application special under 37 CFR 1.102(c)(1) and MPEP § 708.02, Section IV: Applicant's Age, must be accompanied by evidence showing that at least one of the applicants is 65 years of age, or more, such as a birth certificate or a statement by applicant. No fee is required.

The instant petition includes a statement from the applicant declaring that he is 65 years of age or older. Accordingly, the above-identified application has been accorded "special" status.

Telephone inquiries concerning this decision should be directed to Terri Williams at 571-272-2991.

All other inquiries concerning either the examination or status of the application should be directed to the Technology Center.

The application is being forwarded to the Technology Center Art Unit 3727 for action on the merits commensurate with this decision.

Amelia Au
Petitions Examiner
Office of Petitions

UNITED STATES PATENT AND TRADEMARK OFFICE

Commissioner for Patents
United States Patent and Trademark Office
P.O. Box 1450
Alexandria, VA 22313-1450
www.uspto.gov

BLAKELY SOKOLOFF TAYLOR & ZAFMAN LLP
1279 OAKMEAD PARKWAY
SUNNYVALE, CA 94085-4040

COPY MAILED

JUN 2 0 2008

OFFICE OF PETITIONS

In re Application of :
Thomas Mossberg et al :
Application No. 11/145,251 : DECISION ON PETITION
Filed: June 3, 2005 :
Attorney Docket No. 42P13961X2D :

This is a decision on the petition under the unintentional provisions of 37 CFR 1.137(b), filed February 28, 2008, to revive the above-identified application.

The petition is **GRANTED.**

The two-month period for filing an appeal brief under 37 CFR 41.37 (accompanied by the fee required by 37 CFR 41.20(b)(2)), runs from the date of this decision.

This application became abandoned for failure to timely file a reply within the meaning of 37 CFR 1.113 to the final Office action of May 18, 2007. The proposed reply required for consideration of a petition to revive must be a Notice of Appeal (and appeal fee required by 37 CFR 41.20(b)(2)), an amendment that prima facie places the application in condition for allowance, a Request for Continued Examination (RCE) and submission (37 CFR 1.114), or the filing of a continuing application under 37 CFR 1.53(b). See MPEP 711.03(c)(III)(A)(2). No extension of time pursuant to the provisions of 37 CFR 1.136(a) were obtained. Accordingly, the date of abandonment of this application is August 19, 2007.

The petition satisfies the requirements of 37 CFR 1.137(b) in that petitioner has supplied (1) the reply in the form of a Notice of Appeal; (2) the petition fee of $1540; and (3) a proper statement of unintentional delay.

Telephone inquiries concerning this decision should be directed to Irvin Dingle at (571) 272-3210.

This application is being referred to Technology Center AU 2872 to await the filing of an appeal brief or for such other appropriate reply as may be submitted to continue prosecution of the application.

Irvin Dingle
Petition Examiner
Office of Petitions

UNITED STATES PATENT AND TRADEMARK OFFICE

Commissioner for Patents
United States Patent and Trademark Office
P.O. Box 1450
Alexandria, VA 22313-1450
www.uspto.gov

George B. F. Yee, Esq.
TOWNSEND AND TOWNSEND AND CREW, LLP
TWO EMBARCADERO CENTER
EIGHTH FLOOR
SAN FRANCISCO CA 94111-3834

MAILED

APR 13 2009

Technology Center 2100

In re Application of: Akihisa NAGAMI, et al.)
Application No.: 11/145,255)
Filed: June 3, 2005) **DECISION ON PETITION *UNDER 37 CFR §1.181* to RESET PERIOD FOR REPLY**
Attorney Docket No.: 16869Z-152200US)
For: COMPUTER SYSTEM, STORAGE SERVER, SEARCH SERVER, CLIENT DEVICE, AND SEARCH METHOD)

This is a decision on the petition filed July 21, 2008 under 37 CFR § 1.181 to reset the Office action response date under MPEP 710.06 for an Office action not received. The delay in responding to the instant petition is regretted.

A review of the file record indicates that a final Office action was mailed on April 2, 2008. A Request for Continuing Examination, amendment, remarks, as well as a three-month extension of time were filed in the instant application on September 26, 2008. The above-identified papers are entered into the file and have been processed. The response filed September 26, 2008, along with the three-month extension of time, are considered to have been timely filed, thus rendering the request to reset the period for reply of the April 2, 2008 (final) Office action moot.

Accordingly, in view of the above stated reason, the instant petition, filed on July 21, 2008 to reset the period for reply to the April 2, 2008 action, is rendered moot.

Accordingly, the petition is **DISMISSED as MOOT**.

The time period for response continues to run from the date of mailing of the November 26, 2008 non-final Office action. Telephone inquiries should be directed to the undersigned at 571-272-3595.

Brian L. Johnson
Workgroup Quality Assurance Specialist
Technology Center 2100
Computer Architecture, and Software

BLJ: NAJ

UNITED STATES PATENT AND TRADEMARK OFFICE

Commissioner for Patents
United States Patent and Trademark Office
P.O. Box 1450
Alexandria, VA 22313-1450
www.uspto.gov

TOWNSEND AND TOWNSEND AND CREW, LLP
TWO EMBARCADERO CENTER
EIGHTH FLOOR
SAN FRANCISCO CA 94111-3

MAILED

JUL 09 2009

OFFICE OF PETITIONS

In re Application of	:	
Nagami et al.	:	
Application No. 11/145255	:	
Filing or 371(c) Date: 06/03/2005	:	ON PETITION
Title of Invention:	:	
COMPUTER SYSTEM, STORAGE	:	
SERVER, SEARCH SERVER, CLIENT	:	
DEVICE, AND SEARCH METHOD	:	

This is a decision on the Petition for Refund of Extension Fee Pursuant to 37 C.F.R. § 1.182, filed May 14, 2009.

This Petition is hereby **dismissed**.

Any further petition must be submitted within TWO (2) MONTHS from the mail date of this decision. Extensions of time under 37 CFR 1.136(a) are permitted. The reconsideration request should include a cover letter entitled "Request for Reconsideration of Petition under 37 CFR 1.183". This is **not** final agency action within the meaning of 5 U.S.C. § 704.

Background

Applicant filed a petition on July 21, 2008, to reset the Office action response date for an Office action not received. A Decision dismissing the petition was mailed April 13, 2009. The Decision dismissing the petition provided that in response to a final Office action, Applicant filed a Request for Continued Examination and fee, a submission and a three-month extension of time request and fee, which were entered into the file and processed as timely filed in response to the final Office action. As such, the petition to reset the period for reply to the final Office action was rendered moot.

The present petition

Applicant files the present petition and provides that the RCE was filed in response to the final Office action which was never received by Applicant. Applicant believes that the mail date for which the reply period, including extensions of time, should be July 21, 2008, the date on which

non-receipt of the Office action was discovered. Accordingly, the extension of time would not have been required, and a refund of the extension of time fee is therefore requested.

STATUTE, REGULATION, AND EXAMINING PROCEDURE

35 U.S.C. § 41, Patent fees; patent and trademark search systems, states in pertinent part:

(a) The Director shall charge the following fees:

(8) EXTENSION FEES. — For petitions for 1-month extensions of time to take actions required by the Director in an application —
(A) on filing a first petition, $120;
(B) on filing a second petition, $330; and
(C) on filing a third or subsequent petition, $570.

35 USC § 42(d) provides that:

The Commissioner may refund any fee paid by mistake or any amount paid in excess of that required.

37 CFR 1.26(a) states in pertinent part that:

The Director may refund any fee paid by actual mistake or in excess of that required. A change of purpose after the payment of a fee, such as when a party desires to withdraw a patent filing for which the fee was paid, including an application, an appeal, or a request for oral hearing, will not entitle a party to a refund of such fee. The Office will not refund amounts of twenty-five dollars or less unless a refund is specifically requested, and will not notify the payer of such amounts.

OPINION

The applicable statute, 35 USC 42(d), authorizes the Commissioner to refund "any fee paid by mistake or any amount paid in excess of that required." Thus, the patent and Trademark Office (PTO) may refund: (1) a fee paid when no fee is required (*i.e.*, a fee paid by mistake), or (2) any fee paid in excess of the amount of the fee that is required. See Ex Parte Grady, 59 USPQ 276, 277 (Comm'r Pats. 1943)(the statutory authorization for the refund of fees is applicable only to a mistake relating to the fee payment). In the situation in which an applicant or patentee takes an action "by mistake" (e.g., files an application "by mistake"), the submission of fees required to take that action (e.g., a filing fee submitted with such application) is not a "fee paid by mistake" within the meaning of 35 U.S.C. § 42(d).

The Director is required, under 35 U.S.C. § 41, to charge an extension of time fee+.

A review of the application reveals that in response to a final Office action, mailed April 2, 2008, Applicant filed a RCE and a three (3) month extension of time and fee on September 26, 2008. The extension of time and fee was necessary in order to consider the RCE as having been timely

filed. As such, the extension of time fee was not a fee paid when no fee was required, and was not a fee paid in an amount in excess of that required.

The applicable regulation, 37 CFR 1.26, requires that the money had to be paid by actual mistake, for a refund to be authorized. The mistake, however, must clearly be in relation to the payment itself in order to be refundable. Grady, supra. Rather, the amount paid herein was owed at the time it was paid, and it was paid by the representative of the applicant. Such is not a mistake within the meaning of the aforementioned statute and regulation that warrants a refund.

In this regard, there was no mistake relating to the payment itself. Petitioner is reminded that the use of "shall" appears in 35 USC § 41 pertaining to collection of fees upon the filing of an application with the PTO. It is well settled that the use of "shall" in a statute is the language of command, and where the directions of a statute are mandatory, strict compliance with the statutory terms is essential. Farrel Corp. v. U.S. Int'l Trade Comm'n, 942 F.2d 1147, 20 USPQ2d 1912 (Fed. Cir. 1991). That is, it is mandatory that the Director charge, and the applicant pay, the fees specified by statute upon presentation of a request for a service by the PTO. See BEC Pressure Controls Corp. v. Dwyer Instruments, Inc., 380 F.Supp. 1397, 1399, 182 USPQ 190, 192 (N.D. Ind. 1974). As such, the extension fee was due when such was submitted to the PTO on September 26, 2008, and was paid in the correct amount. Id. The language of the statute does not permit the Director any discretion with respect to charging the fees set forth therein. Id.

That Applicant may have erred in presenting the extension fee to the PTO does not warrant a finding that the payment was made "by mistake." Rather, the fee was owed at the time it was paid. The payment of the fee automatically was due, by statute, when petitioner presented, rightly, or wrongly, the aforementioned submission to the PTO in order to render the RCE filing timely.

Applicant requested that the extension fee be accepted, so that the RCE would be considered timely filed. Applicant does not contend that the papers and fee for accomplishing this result were presented to the PTO in error. There clearly was no error in relation to the payment of fees to the PTO. As noted above, the extension fee was owed, by law, at the time it was paid, and it was paid by a representative of the Applicant. Such does not warrant either a finding of mistake relating to the payment, or warrant a refund of the fee. See In re Hartman, 145 USPQ 402 (Comm'r Pat. 1965). The fact that the fee was necessary at the time it was paid warrants a conclusion that no error in payment was involved. See Meissner v. U.S., 108 USPQ 6 (D.C. Cir. 1955). Such is not a mistake as contemplated by the statute. Id. It follows that no refund is due.

DECISION

In that Applicant has failed to establish the existence of a mistake in payment of the extension fee within the meaning of the statute and regulation, no refund of the entire, or any fractional part thereof, is, or can be, authorized. Accordingly the petition is dismissed.

Further correspondence with respect to this matter should be addressed as follows:

By mail:	Mail Stop Petitions Director for Patents PO Box 1450 Alexandria, VA 22313-1450
By FAX:	(703) 872-9306 Attn: Office of Petitions
By hand:	220 20th Street S. Customer Window Crystal Plaza Two, Lobby Room 1B03 Arlington, VA 22202

Telephone inquiries concerning this matter should be directed to the undersigned at (571) 272-3232.

/Derek L. Woods/
Derek L. Woods
Petitions Attorney
Office of Petitions

UNITED STATES PATENT AND TRADEMARK OFFICE

Commissioner for Patents
United States Patent and Trademark Office
P.O. Box 1450
Alexandria, VA 22313-1450
www.uspto.gov

Burr & Brown
P.O. Box 7068
Syracuse, NY 13261-7068

COPY MAILED
SEP 15 2006
OFFICE OF PETITIONS

In re Application of

Masayasu Suzuki et al.
Application No. 11/145,265
Filed: June 2, 2005
Attorney Docket No. 908_001

DECISION ON PETITION
TO WITHDRAW
FROM RECORD

This is a decision on the Request to Withdraw as attorney or agent of record under 37 C.F.R. § 1.36(b), filed May 19, 2006.

The request is **NOT APPROVED**.

A grantable request to withdraw as attorney/agent of record must be signed by every attorney/agent seeking to withdraw or contain a clear indication that one attorney is signing on behalf of another/others. A request to withdraw will not be approved unless at least 30 (thirty) days would remain between the date of approval and the later of the expiration date of a time to file a response or the expiration date of the maximum time period which can be extended under 37 C.F.R. § 1.136(a).

The Office cannot approve the request at this time since the reasons provided do not meet any of the conditions under the mandatory or permissive categories enumerated in 37 CFR 10.40. Section 10.40 of Title 37 of the Code of Federal Regulation states, "[a] practitioner shall not withdraw from employment in a proceeding before the Office without permission from the Office[.]" More specifically, 37 CFR 10.40 states, "[i]f paragraph (b) of this section is not applicable, a practitioner may not request permission to withdraw in matter pending before the Office unless such request or such withdrawal is" for one the permissive reasons listed in 37 CFR 10.40(c). The reasons set forth in the request, **assignee transferring responsibility for this application**, do not meet any the conditions set forth in 37 CFR 10.40 because the assignee has not intervened in accordance with 37 CFR 3.71 and no statement under 37 CFR 3.73(b) has been filed.

All future communications from the Office will continue to be directed to the above-listed address until otherwise notified by applicant.

Telephone inquiries concerning this decision should be directed to Terri Williams at 571-272- 2991.

Amelia Au
Petitions Examiner
Office of Petitions

cc: **David L. Tarnoff**
Global IP Counselors LLP
1233 Twentieth St., N.W.
Suite 700
Washington D.C. 20036

UNITED STATES PATENT AND TRADEMARK OFFICE

Commissioner for Patents
United States Patent and Trademark Office
P.O. Box 1450
Alexandria, VA 22313-1450
www.uspto.gov

REED INTELLECTUAL PROPERTY LAW GROUP
1400 PAGE MILL ROAD
PALO ALTO CA 94304-1124

COPY MAILED
OCT 0 6 2006
OFFICE OF PETITIONS

In re Application of :
Manoj MANIAR :
Application No. 11/145,266 : ON PETITION
Filed: June 2, 2005 :
Attorney Docket No. 8500-0284 :

This is in response to the petition under 37 CFR 1.47(b), filed December 14, 2005.

The petition is **GRANTED.**

Petitioner has shown that the non-signing inventor, Manoj Maniar, has, by his behavior over an extended period of time, constructively refused to join in the filing of the above-identified application after having been presented with application papers. Specifically, the statement of facts by Edward E. Davis, Manager of Intellectual Property and Assistant Secretary of SRI International, a party in interest, establishes that the inventor was successfully mailed the application papers, including the specification, claims and drawings, but the inventor would not sign the declaration for patent application unless he received an excessive amount of compensation. Petitioner submitted a declaration in compliance with 37 CFR 1.63 and 1.64.

The application and papers have been reviewed and found in compliance with 37 CFR 1.47(b). This application is hereby accorded Rule 1.47(b) status.

As provided in 37 CFR 1.47(c), this Office will forward notice of this application's filing to the non-signing inventor at the address given in the petition. Notice of the filing of this application will also be published in the Official Gazette.

The above-identified application will be forwarded to the Office of Initial Patent Examination for further processing.

Telephone inquiries regarding this decision should be directed to David Bucci at (571) 272-7099.

Brian Hearn
Petitions Examiner
Office of Petitions

UNITED STATES PATENT AND TRADEMARK OFFICE

Commissioner for Patents
United States Patent and Trademark Office
P.O. Box 1450
Alexandria, VA 22313-1450
www.uspto.gov

MANOJ MANIAR
46750 SENTINEL DRIVE
FREMONT CA 94539

COPY MAILED
OCT 0 6 2006
OFFICE OF PETITIONS

In re Application of
Manoj MANIAR
Application No. 11/145,266
Filed: June 2, 2005
For: FORMULATIONS FOR THE TREATMENT OF PAIN

Dear Mr. Maniar:

You are named as a sole inventor in the above-identified United States patent application, filed under the provisions of 35 U.S.C. 116 (United States Code), and 37 CFR 1.47(b), Rules of Practice in Patent Cases. Should a patent be granted on the application you will be designated therein as a sole inventor.

As a named inventor you are entitled to inspect any paper in the file wrapper of the application, order copies of all or any part thereof (at a prepaid cost per 37 CFR 1.19) or make your position of record in the application. Alternatively, you may arrange to do any of the preceding through a registered patent attorney or agent presenting written authorization from you. If you care to join the application, counsel of record (see below) would presumably assist you. Joining the application would entail the filing of an appropriate oath or declaration by you pursuant to 37 CFR 1.63.

Requests for information regarding your application should be directed to the File Information Unit at (703) 308-2733. Information regarding how to pay for and order a copy of the application, or a specific paper in the application, should be directed to the Certification Division at (703) 308-9726 or 1 (800) 972-6382 (outside the Washington, DC area).

Telephone inquiries regarding this communication should be directed to David Bucci at (571) 272-7099.

Brian Hearn
Petitions Examiner
Office of Petitions

cc: REED INTELLECTUAL PROPERTY LAW GROUP
1400 PAGE MILL ROAD
PALO ALTO CA 94304-1124

OIPE IAP76
OCT 17 2007
PATENT & TRADEMARK OFFICE

IN THE UNITED STATES PATENT AND TRADEMARK OFFICE

In Re Application of:
Manoj MANIAR

Confirmation No.: 3123

Serial No.: 11/145,266

Group Art Unit: 1617

Filing Date: June 2, 2005

Examiner: Unknown

Title: FORMULATIONS FOR THE TREATMENT OF PAIN

PETITION UNDER 37 C.F.R. § 1.47(b)

Mail Stop Petition
Commissioner for Patents
P.O. Box 1450
Alexandria, VA 22313-1450

Sir:

Pursuant to 37 C.F.R. 1.47(b), assignee SRI International, Inc. ("SRI") petitions the Commissioner for permission to prosecute this patent application without the cooperation of sole inventor Manoj Maniar. The facts in support of this petition are set forth in the attached Declaration of Edward E. Davis, Manager of Intellectual Property and Assistant Secretary at SRI.

SRI is a nonprofit scientific research institute qualified under section 501(c)(3) of the Internal Revenue Code and, as such, operates on limited funding. In view of budget constraints, SRI has established procedures with regard to obtaining assistance from former employee inventors in protecting SRI's proprietary interests. Employees are contractually obligated by way of employment contract to assist SRI in obtaining and enforcing SRI's intellectual property rights. After termination of employment, SRI typically compensates employee inventors up to $150 per hour for about 2-3 hours time to review a patent application for an invention made during their employment.

Dr. Maniar was formerly employed by SRI. Pursuant to his contract of employment (Davis Decl. Ex. D), Dr. Maniar was obligated to assign all inventions made during his employment to SRI. During that employment he conceived an invention which is the subject of the present application. A provisional application relating to that invention was filed with his cooperation. Dr. Maniar was subsequently dismissed for cause from SRI.

When the time came to file a non-provisional with the same content as the provisional application, SRI attempted to contact Dr. Maniar by mail without any response. One of the communications to him was returned "refused." Finally Mr. Davis spoke with Dr. Maniar on the telephone. Dr. Maniar demanded $2100 to sign the inventor's oath and power of attorney, an assignment, and a PCT request form. He refused an offer of $1000, even after it was pointed out to him that the present non-provisional application had the same content as the provisional that he had already read and approved. The sum demanded by Dr. Maniar for complying with his duty to assign and for signing the inventor's oath is unreasonable in light of SRI's budget constraints as a nonprofit organization.

Dr. Maniar had previously demanded the same $2100 to sign the inventor's oath and assignment in U.S. Patent Application Serial No. 10/912,814, refusing an offer of $1050. SRI's petition to proceed without his cooperation was granted by the PTO in that case.

The grant of this petition is necessary to prevent a loss of rights, because in light of Dr. Maniar's position, the prosecution of this application cannot otherwise go forward.

Dr. Maniar's last known address is:

46750 Sentinel Drive
Fremont, California 94539

This petition is accompanied by the $200.00 fee set forth in 37 C.F.R. § 1.17(g). Please charge any underpayment, or credit any overpayment, to deposit account 18-0580.

Respectfully submitted,

By: _____

Flavio M. Rose
Registration No. 40,791

REED INTELLECTUAL PROPERTY LAW GROUP
1400 Page Mill Road
Palo Alto, California 94304
(650) 251-7700 Telephone
(650) 251-7739 Facsimile

UNITED STATES PATENT AND TRADEMARK OFFICE

Commissioner for Patents
United States Patent and Trademark Office
P.O. Box 1450
Alexandria, VA 22313-1450
www.uspto.gov

OIPE IAP76
OCT 17 2007
PATENT & TRADEMARK OFFICE

MANOJ MANIAR
46750 SENTINEL DRIVE
FREMONT CA 94539

COPY MAILED
OCT 0 6 2006
OFFICE OF PETITIONS

In re Application of
Manoj MANIAR
Application No. 11/145,266
Filed: June 2, 2005
For: FORMULATIONS FOR THE TREATMENT OF PAIN

Dear Mr. Maniar:

You are named as a sole inventor in the above-identified United States patent application, filed under the provisions of 35 U.S.C. 116 (United States Code), and 37 CFR 1.47(b), Rules of Practice in Patent Cases. Should a patent be granted on the application you will be designated therein as a sole inventor.

As a named inventor you are entitled to inspect any paper in the file wrapper of the application, order copies of all or any part thereof (at a prepaid cost per 37 CFR 1.19) or make your position of record in the application. Alternatively, you may arrange to do any of the preceding through a registered patent attorney or agent presenting written authorization from you. If you care to join the application, counsel of record (see below) would presumably assist you. Joining the application would entail the filing of an appropriate oath or declaration by you pursuant to 37 CFR 1.63.

Requests for information regarding your application should be directed to the File Information Unit at (703) 308-2733. Information regarding how to pay for and order a copy of the application, or a specific paper in the application, should be directed to the Certification Division at (703) 308-9726 or 1 (800) 972-6382 (outside the Washington, DC area).

Telephone inquiries regarding this communication should be directed to David Bucci at (571) 272-7099.

Brian Hearn
Petitions Examiner
Office of Petitions

cc: REED INTELLECTUAL PROPERTY LAW GROUP
1400 PAGE MILL ROAD
PALO ALTO CA 94304-1124

UNITED STATES PATENT AND TRADEMARK OFFICE

OIPE IAP76
OCT 17 2007
PATENT & TRADEMARK OFFICE

Received
OCT 11 2006
Mintz Levin

Commissioner for Patents
United States Patent and Trademark Office
P.O. Box 1450
Alexandria, VA 22313-1450
www.uspto.gov

REED INTELLECTUAL PROPERTY LAW GROUP
1400 PAGE MILL ROAD
PALO ALTO CA 94304-1124

COPY MAILED
OCT 06 2006
OFFICE OF PETITIONS

10/12/06 DER DOCKETED

In re Application of
Manoj MANIAR
Application No. 11/145,266
Filed: June 2, 2005
Attorney Docket No. 8500-0284

ON PETITION

This is in response to the petition under 37 CFR 1.47(b), filed December 14, 2005.

The petition is **GRANTED.**

Petitioner has shown that the non-signing inventor, Manoj Maniar, has, by his behavior over an extended period of time, constructively refused to join in the filing of the above-identified application after having been presented with application papers. Specifically, the statement of facts by Edward E. Davis, Manager of Intellectual Property and Assistant Secretary of SRI International, a party in interest, establishes that the inventor was successfully mailed the application papers, including the specification, claims and drawings, but the inventor would not sign the declaration for patent application unless he received an excessive amount of compensation. Petitioner submitted a declaration in compliance with 37 CFR 1.63 and 1.64.

The application and papers have been reviewed and found in compliance with 37 CFR 1.47(b). This application is hereby accorded Rule 1.47(b) status.

As provided in 37 CFR 1.47(c), this Office will forward notice of this application's filing to the non-signing inventor at the address given in the petition. Notice of the filing of this application will also be published in the Official Gazette.

The above-identified application will be forwarded to the Office of Initial Patent Examination for further processing.

Telephone inquiries regarding this decision should be directed to David Bucci at (571) 272-7099.

Brian Hearn
Petitions Examiner
Office of Petitions

UNITED STATES PATENT AND TRADEMARK OFFICE

Commissioner for Patents
United States Patent and Trademark Office
P.O. Box 1450
Alexandria, VA 22313-1450
www.uspto.gov

COPY MAILED

SEP 0 9 2005

OFFICE OF PETITIONS

KNOBBE MARTENS OLSON & BEAR LLP
2040 MAIN STREET
FOURTEENTH FLOOR
IRVINE CA 92614

In re Application of :
Bird et al. : DECISION GRANTED
Application No. 11/145,270 :
Filed: June 3, 2005 :
Attorney Docket No.:SPECBIC.162A :

This is a decision on the petition filed August 12, 2005, requesting to accept omitted item(s)(figures 8) in a nonprovisional application.

The application was filed on June 3, 2005. However, on June 29, 2005, the Office of Initial Patent Examination (OIPE) mailed a Notice stating that the application had been accorded a filing date of June 3, 2005 but figure 8 as described in the specification appeared to have been omitted.

In response, the present petition was filed wherein Petitioner contends figure 8 was filed on June 3, 2005. In support, the petition is accompanied by a copy of applicants' return postcard which lists "11 sheets drawings ". The petition is further accompanied by a copy of figure 8.

Applicant's postcard receipt is prima facie evidence that 11 sheets of drawings including figure 8 as described in the specification were received on June 3, 2005, but figure 8 is not present in the file. Therefore, it is concluded that figure 8 was received on June 3, 2005, as shown in counsel's file, and later misplaced in the office.

The petition is Granted. The $400.00 submitted towards the petition fee will be refunded 11-1410.

Figure 8 supplied on August 12, 2005, will be used for processing and examination purposes.

The application will be returned to the Office of Initial Patent

Examination for further processing with a filing date of June 3, 2005, using the drawings submitted on June 3, 2005 and substitute figure 8 supplied with the petition on August 12, 2005.

Telephone inquiries related to this decision may be directed to the undersigned at (571) 272-3215.

Charlema R. Grant

Charlema R. Grant
Petition Attorney
Office of Petitions

SPE RESPONSE FOR CERTIFICATE OF CORRECTION

Paper No.: _____

DATE : February 15, 2008

TO SPE OF : ART UNIT ~~2630~~ 3676

SUBJECT : Request for Certificate of Correction for Appl. No. 11/145277 patent no7273103

Please respond to this request for a certificate of correction within 7 days.

Please review the requested changes/corrections as shown in the **COCIN** document(s) in the IFW application image. No new matter should be introduced, nor should the scope or meaning of the claims be changed.

Please complete the response (see below) and forward the completed response to scanning using document code **COCX**.

Magdalene Talley

Certificates of Correction Branch

703-308-9390 ext. 116

Thank You For Your Assistance

The request for issuing the above-identified correction(s) is hereby:

Note your decision on the appropriate box.

- ☒ **Approved** — All changes apply.
- ☐ **Approved in Part** — Specify below which changes **do not** apply.
- ☐ **Denied** — State the reasons for denial below.

Comments: _____

SPE

3676
Art Unit

SCANI **Please forward case and paper to address shown below.**

SPE RESPONSE FOR CERTIFICATE OF CORRECTION

Paper No.: _____

DATE : 2/15/08

TO SPE OF : ART UNIT ~~3676~~ 3676 Gay, Jennifer

SUBJECT : Request for Certificate of Correction for Appl. No.: 11/145277 Patent No.: 7273103

Please respond to this request for a certificate of correction within 7 days.

Please review the requested changes/corrections as shown in the attached certificate of correction. Please complete this form (see below) and forward it with the file to:

Certificates of Correction Branch (CofC) Class 23
South Tower - 9A22
Palm Location 7580

HENRY RANDALL
Certificates of Correction Branch
703-308-9390 ext. _____

Thank You For Your Assistance

The request for issuing the above-identified correction(s) is hereby:

Note your decision on the appropriate box.

- ☒ **Approved** — All changes apply.
- ☐ **Approved in Part** — Specify below which changes do not apply.
- ☐ **Denied** — State the reasons for denial below.

Comments: _____

SPE

3676
Art Unit

PTOL-306 (REV. 7/03)

U.S. DEPARTMENT OF COMMERCE Patent and Trademark Office

SPE RESPONSE FOR CERTIFICATE OF CORRECTION

Paper No.:20100522

DATE : May 22, 2010

TO SPE OF : ART UNIT 1621

SUBJECT : Request for Certificate of Correction on Patent No.: 7323585

A response is requested with respect to the accompanying request for a certificate of correction.

Please complete this form and return with file, within **7** days to:
Certificates of Correction Branch - ST (South Tower) 9A22
Palm location **7590** - Tel. No. (703) 305-8309

With respect to the change(s) requested, correcting Office and/or Applicant's errors, should the patent read as shown in the certificate of correction? No new matter should be introduced, nor should the scope or meaning of the claims be changed.

Thank You For Your Assistance **Certificates of Correction Branch**

The request for issuing the above-identified correction(s) is hereby:

Note your decision on the appropriated box.

☒ **Approved** All changes apply.

☐ **Approved in Part** Specify below which changes **do not** apply.

☐ **Denied** State the reasons for denial below.

Comments:

/DANIEL M SULLIVAN/
Supervisory Patent Examiner.Art Unit 1621

UNITED STATES PATENT AND TRADEMARK OFFICE

Commissioner for Patents
United States Patent and Trademark Office
P.O. Box 1450
Alexandria, VA 22313-1450
www.uspto.gov

BLAKELY SOKOLOFF TAYLOR & ZAFMAN, LLP
1279 OAKMEAD PARKWAY
SUNNYVALE, CA 94085-4040

COPY MAILED

AUG 1 4 2008

OFFICE OF PETITIONS

In re Application of	:	
Thomas Mossberg, et. al.	:	
Application No. 11/145,291	:	DECISION ON PETITION
Filed: June 3, 2005	:	
Attorney Docket No. 42P13961X2D3	:	

This is a decision on the petition under 37 CFR 1.137(b) filed February 28, 2008, to revive the above-identified application.

The application became abandoned for failure to file a reply to the final Office action mailed May 18, 2007.

The petition satisfies the requirements of 37 CFR 1.137(b) in that petitioner has supplied (1) the reply in the form of a Notice of Appeal and $510 fee; (2) the petition fee of $1,540; and (3) a proper statement of unintentional delay. Therefore, the petition is **GRANTED**.

The two-month period for filing an appeal brief under 37 CFR 41.37 (accompanied by the fee required by 37 CFR 41.20(b)(2)), runs from the date of this decision.

This application is being referred to Technology Center Art Unit 2872 to await the filing of an appeal brief or for such other appropriate reply as may be submitted to continue prosecution of the application.

Telephone inquiries concerning this decision should be directed to the undersigned at (571) 272-3226.

Andrea Smith
Petitions Examiner
Office of Petitions

UNITED STATES PATENT AND TRADEMARK OFFICE

Commissioner for Patents
United States Patent and Trademark Office
P.O. Box 1450
Alexandria, VA 22313-1450
www.uspto.gov

IAN C. MCLEOD
MCLEOD & MOYNE, P.C.
2190 COMMONS PARKWAY
OKEMOS, MI 48864

MAILED

SEP 25 2009

OFFICE OF PETITIONS

In re Application of	:	
Dean M. ASLAM, et al.	:	
Application No. 11/145,292	:	DECISION ON PETITION
Filed: June 3, 2005	:	UNDER 37 CFR 1.137(b)
Attorney Docket No. **MSU 4.1-759**	:	

This is a decision on the petition under the unintentional provisions of 37 CFR 1.137(b), filed August 28, 2009, to revive the above-identified application.

The petition is **GRANTED**.

This application became abandoned for failure to timely pay the issue/publication fees on or before August 17, 2009, as required by the Notice of Allowance and Fee(s) Due, mailed April 17, 2009. Accordingly, the date of abandonment of this application is August 18, 2009.

The petition satisfies the requirements of 37 CFR 1.137(b) in that petitioner has supplied (1) the reply in the form of payment of the issue fee of $755 and publication fee of $300, (2) the petition fee of $810; and (3) an adequate statement of unintentional delay.

The application file does not indicate a change of address has been filed in this case, although the address given on the petition differs from the address of record. A change of address should be filed in this case in accordance with MPEP 601.03. A courtesy copy of this decision is being mailed to the address noted on the petition. However, until otherwise instructed, all future correspondence regarding this application will be mailed solely to the address of record.

Telephone inquiries concerning this decision should be directed to Monica A. Graves at (571) 272-7253.

This application is being referred to the Office of Data Management for processing into a patent.

Brian W. Brown
Petitions Examiner
Office of Petitions

UNITED STATES PATENT AND TRADEMARK OFFICE

Commissioner for Patents
United States Patent and Trademark Office
P.O. Box 1450
Alexandria, VA 22313-1450
www.uspto.gov

TOWNSEND AND TOWNSEND AND CREW, LLP
TWO EMBARCADERO CENTER
EIGHTH FLOOR
SAN FRANCISCO CA 94111-3834

COPY MAILED

JUL 20 2007

OFFICE OF PETITIONS

In re Application of

ERLANDER, Mark G. et al.
Application No. 11/145, 307
Filed: April 29, 2005
Attorney Docket No. **022041-002020US**

DECISION ON PETITION
TO WITHDRAW
FROM RECORD

This is a decision on the Request to Withdraw as attorney or agent of record under 37 C.F.R. § 1.36(b), filed June 04, 2007.

The request is **APPROVED**.

A grantable request to withdraw as attorney/agent of record must be signed by every attorney/agent seeking to withdraw or contain a clear indication that one attorney is signing on behalf of another/others. A request to withdraw will not be approved unless at least 30 (thirty) days would remain between the date of approval and the later of the expiration date of a time to file a response or the expiration date of the maximum time period which can be extended under 37 C.F.R. § 1.136(a).

The request was signed by Karen B. Dow on behalf of all attorneys of record who are associated with customer No. 20350. All attorneys/agents associated have been withdrawn.
Applicant is reminded that there is no attorney of record at this time.

The request to change the correspondence of record is not acceptable as the requested correspondence address is not that of: (1) the first named signing inventor; or (2) an intervening assignee of the entire interest under 37 C.F.R 3.71. All future communications from the Office will be directed to the first named signing inventor.

There are no outstanding office actions at this time.

Telephone inquiries concerning this decision should be directed to Michelle R. Eason at 571-272-4231.

Terri Williams
Petitions Examiner
Office of Petitions

cc: **MARK G. ERLANDER**
750 BAIR ISLAND ROAD, APT. 100
REDWOOD CITY, CA 94063

cc: **PATENTIQUE PLLC**
P.O. BOX 5803
BELLEVUE, WA 98006

UNITED STATES PATENT AND TRADEMARK OFFICE

UNITED STATES DEPARTMENT OF COMMERCE
United States Patent and Trademark Office
Address: COMMISSIONER FOR PATENTS
P.O. Box 1450
Alexandria, Virginia 22313-1450
www.uspto.gov

APPLICATION NUMBER	FILING OR 371 (c) DATE	FIRST NAMED APPLICANT	ATTY. DOCKET NO./TITLE
11/145,307	06/03/2005	Mark G. Erlander	022041-002020US

CONFIRMATION NO. 5565

OC000000024903546

20350
TOWNSEND AND TOWNSEND AND CREW, LLP
TWO EMBARCADERO CENTER
EIGHTH FLOOR
SAN FRANCISCO, CA 94111-3834

Date Mailed: 07/19/2007

NOTICE REGARDING CHANGE OF POWER OF ATTORNEY

This is in response to the Power of Attorney filed 06/04/2007.

- The withdrawal as attorney in this application has been accepted. Future correspondence will be mailed to the new address of record. 37 CFR 1.33.

Michelle R. Eason

Office of Initial Patent Examination (571) 272-4000, or 1-800-PTO-9199

FORMER ATTORNEY/AGENT COPY

UNITED STATES PATENT AND TRADEMARK OFFICE

Commissioner for Patents
United States Patent and Trademark Office
P.O. Box 1450
Alexandria, VA 22313-1450
www.uspto.gov

Patentique PLLC
P.O. Box 5803
Bellevue WA 98006

COPY MAILED

MAR 27 2009

OFFICE OF PETITIONS

In re Application of :
Erlander, et al. :
Application No. 11/145,307 : DECISION ON PETITION
Filed: June 3, 2005 :
For: IDENTIFICATION OF TUMORS :

This is a decision on the petition under the unintentional provisions of 37 CFR 1.137(b), filed February 8, 2009, to revive the above-identified application.

The petition is **GRANTED**.

The application became abandoned August 15, 2008 for failure to reply in a timely manner to the non-final Office action, mailed May 14, 2008. The non-final Office action set a three month shortened statutory period of time for reply. No extensions of time under the provisions of 37 CFR 1.136(a) were obtained. Notice of Abandonment was mailed December 15, 2008.

The petition satisfies the requirements of 37 CFR 1.137(b) in that petitioner has supplied (1) the reply to the non-final Office action, (2) the required petition fee, and (3) a proper statement of unintentional delay.

Telephone inquiries concerning this decision should be directed to the undersigned at 571-272-3205.

This application is being referred to Group Art Unit 1636 for further processing.

/ALESIA M. BROWN/

Alesia M. Brown
Petitions Attorney
Office of Petitions

UNITED STATES PATENT AND TRADEMARK OFFICE

Commissioner for Patents
United States Patent and Trademark Office
P.O. Box 1450
Alexandria, VA 22313-1450
www.uspto.gov

APPLICATION NUMBER	FILING/RECEIPT DATE	FIRST NAMED APPLICANT	ATTORNEY DOCKET NUMBER
11/145,311	06/03/2005	Charles Kannankeril	D-30384-01

Mark B. Quatt
Sealed Air Corporation
P.O. Box 464
Duncan SC 29334

DATE MAILED: December 13, 2006

DECISION GRANTING PETITION UNDER 37 CFR 1.138(d)
The declaration of/ express abandonment is recognized

This is in response to the petition under 37 CFR 1.138(d) filed on December 11, 2006, requesting for a refund of any previously paid search fee and excess claims fee in the above-identified application.

The petition is granted.

The express abandonment is recognized. Any previously paid search fee and excess claims fee are hereby refunded.

Any inquiries concerning this decision should be directed to the Pre-Grant Publication Division at (703) 605-4283.

Barbara J. Debnam
Pre-Grant Publication Division

UNITED STATES PATENT AND TRADEMARK OFFICE

COMMISSIONER FOR PATENTS
UNITED STATES PATENT AND TRADEMARK OFFICE
P.O. BOX 1450
ALEXANDRIA, VA 22313-1450
www.uspto.gov

COPY MAILED

FEB 0 8 2008

OFFICE OF PETITIONS

TOWNSEND AND TOWNSEND AND CREW, LLP
TWO EMBARCADERO CENTER
EIGHTH FLOOR
SAN FRANCISCO, CA 94111-3834

In re Application of Yao Hui Xu, et al. Application No. 11/145,324 Filed: June 3, 2005 Attorney Docket No. 025779-000610US	: : : : :	ON PETITION

This is a decision in response to the petition, filed September 14, 2007, to revive the above-identified application under the provisions of 37 CFR 1.137(b).

The petition is **GRANTED**.

The application became abandoned for a failure to reply in a timely manner to a final Office action mailed February 23, 2007. A Notice of Abandonment was mailed on September 12, 2007. In response, on September 14, 2007, the present petition was filed.

The petition satisfies the requirements of 37 CFR 1.137(b) in that petitioner has supplied (1) the reply in the form of an amendment (2) the petition fee of $1,500; and (3) an adequate statement of unintentional delay.

This application is being referred to Technology Center AU 3753 for appropriate action by the Examiner in the normal course of business on the reply received September 14, 2007.

Telephone inquiries concerning this decision should be directed to the undersigned at (571) 272-3204. Inquiries relating to further prosecution should be directed to the Technology Center.

Sherry D. Brinkley
Petitions Examiner
Office of Petitions

UNITED STATES PATENT AND TRADEMARK OFFICE

Commissioner for Patents
United States Patent and Trademark Office
P.O. Box 1450
Alexandria, VA 22313-1450
www.uspto.gov

Seagate Technology
c/o MOFO SF
425 Market Street
San Francisco, CA 94105

COPY MAILED

AUG 0 2 2007

OFFICE OF PETITIONS

In re Application of Anthony J. Aiello et al. Application No. 11/145,347 Filed: June 2, 2005 Attorney Docket No. 146712013600	:	DECISION ON REQUESTS TO WITHDRAW FROM RECORD

This is a decision on the request to withdraw as attorney or agent under 37 C.F.R. § 1.36(b), filed April 24, 2007.

The requests are **NOT APPROVED** as moot.

A review of the file record indicates that the power of attorney to Peter J. Yim and all of record has been revoked by the assignee of the patent application on June 26, 2007. Accordingly, the request to withdraw under 37 C.F.R. § 1.36(b) is moot.

All future communications from the Office will continue to be directed to the below-listed address until otherwise notified by applicant.

A non-final rejection was mailed on July 6, 2007. Failure to timely reply will result in the abandonment of this application.

Telephone inquires concerning this decision should be directed to Kimberly Inabinet at 571-272- 4618.

Frances Hicks
Petitions Examiner
Office of Petitions

cc: Seagate Technology, LLC
c/o Novak Druce & Quigg, LLP
1000 Louisiana, Suite 5350
Houston, TX 77002

UNITED STATES PATENT AND TRADEMARK OFFICE

Commissioner for Patents
United States Patent and Trademark Office
P.O. Box 1450
Alexandria, VA 22313-1450
www.uspto.gov

COCHRAN FREUND & YOUNG LLC
LSI CORPORATION
2026 CARIBOU DRIVE
SUITE 201
FORT COLLINS CO 80525

COPY MAILED

APR 2 3 2009

OFFICE OF PETITIONS

In re Application of	:	
Randall F. HORNING et al.	:	
Application No. 11/145,366	:	DECISION ON PETITION
Filed: June 03, 2005	:	
Attorney Docket No. **04-0373 / LSI109US01**	:	

This is a decision on the petition under the unintentional provisions of 37 CFR 1.137(b), filed March 19, 2009, to revive the above-identified application.

The petition is **GRANTED**.

This application became abandoned for failure to timely pay the issue and publication fees on or before February 02, 2009, as required by the Notice of Allowance and Fee(s) Due and the Notice of Allowability, mailed October 31, 2008. Accordingly, the date of abandonment of this application is February 03, 2009.

The petition satisfies the requirements of 37 CFR 1.137(b) in that petitioner has supplied (1) the reply in the form of payment of the issue fee of $1510 , the publication fee of $300 and, (2) the petition fee of $1620; and (3) a proper statement of unintentional delay. Accordingly, the Issue Fee payment is accepted as having been unintentionally delayed.

Telephone inquiries concerning this decision should be directed to Tredelle Jackson at (571) 272-2783.

This application is being referred to the Office of Data Management.

Ramesh Krishnamurthy

Ramesh Krishnamurthy
Petitions Examiner
Office of Petitions

UNITED STATES PATENT AND TRADEMARK OFFICE

Commissioner for Patents
United States Patent and Trademark Office
P.O. Box 1450
Alexandria, VA 22313-1450
www.uspto.gov

ENRIQUE G. ESTEVEZ
255 SOUTH ORANGE AVE
SUITE 1401
ORLANDO FL 32802-3791

COPY MAILED

MAY 18 2007

OFFICE OF PETITIONS

In re Application of

ROJAS-PARDINI, Pablos
Application No. 11/145,376
Filed: June 03, 2005
Attorney Docket No. **37887.UT**

DECISION ON PETITION
TO WITHDRAW
FROM RECORD

This is a decision on the Request to Withdraw as attorney or agent of record under 37 C.F.R. § 1.36(b), filed January 29, 2007.

The request is **NOT APPROVED**.

A grantable request to withdraw as attorney/agent of record must be signed by every attorney/agent seeking to withdraw or contain a clear indication that one attorney is signing on behalf of another/others. A request to withdraw will not be approved unless at least 30 (thirty) days would remain between the date of approval and the later of the expiration date of a time to file a response or the expiration date of the maximum time period which can be extended under 37 C.F.R. § 1.136(a).

The request cannot be approved because no reasons for withdrawal have been provided. The Office cannot, at this time, determine whether practitioner's request is one of the mandatory or permissive reasons enumerated in 37 CFR 10.40. Any subsequent requests must include reasons for withdrawal. Please note that there is a space provided for on PTO/SB/83 (Request to Withdraw as Attorney or Agent) to supply practitioner's reasons.

All future communications from the Office will continue to be directed to the above-listed address until otherwise notified by applicant.

Telephone inquiries concerning this decision should be directed to Michelle R. Eason at 571-272- 4231.

T. Williams

Terri Williams
Petitions Examiner
Office of Petitions

cc: **PABLO ROJAS PARDINI/CLINICA ROJAS PARDINI**
AVENUE RAMON ARIAS, EDIFICIO
ROPARDI PISO A.
PANAMA CITY, PANAMA 2664 ZONA 9A

UNITED STATES PATENT AND TRADEMARK OFFICE

Commissioner for Patents
United States Patent and Trademark Office
P.O. Box 1450
Alexandria, VA 22313-1450
www.uspto.gov

SUN MICROSYSTEMS, INC.
C/O DARBY & DARBY P.C.
P.O. BOX 770
CHURCH STREET STATION
NEW YORK, NY 10008-0770

COPY MAILED

JUN 09 2008

In re Application of	:	
IACOBOVICI, Sorin	:	
Application No. 11/145,397	:	DECISION ON PETITION
Filed: June 03, 2005	:	TO WITHDRAW
Attorney Docket No. **20910/0205547-US0**	:	FROM RECORD
	:	

This is a decision on the Request to Withdraw as attorney or agent of record under 37 C.F.R. § 1.36(b), filed April 18, 2008.

The request is **APPROVED**.

A grantable request to withdraw as attorney/agent of record must be signed by every attorney/agent seeking to withdraw or contain a clear indication that one attorney is signing on behalf of another/others. A request to withdraw will not be approved unless at least 30 (thirty) days would remain between the date of approval and the later of the expiration date of a time to file a response or the expiration date of the maximum time period which can be extended under 37 C.F.R. § 1.136(a).

The request was signed by John W. Branch on behalf of all attorneys of record who are associated with customer No. 62663. All attorneys/agents associated have been withdrawn. Applicant is reminded that there is no attorney of record at this time.

The request to change the correspondence address of record is not acceptable as the requested correspondence address is not that of: (1) the first named signing inventor; or (2) an intervening assignee of the entire interest under 37 C.F.R 3.71. All future communications from the Office will be directed to the first named signing inventor.

There are no outstanding office actions at this time.

Telephone inquiries concerning this decision should be directed to Michelle R. Eason at 571-272-4231.

Michelle R. Eason
Paralegal Specialist
Office of Petitions

cc: **SORIN IACOBOVICI**
5990 COUNTESS DRIVE
SAN JOSE, CA 95129

cc: **OSHA LIANG L.L.P./SUN**
1221 MCKINNEY, SUITE 2800
HOUSTON, TX 77010

UNITED STATES PATENT AND TRADEMARK OFFICE

Commissioner for Patents
United States Patent and Trademark Office
P.O. Box 1450
Alexandria, VA 22313-1450
www.uspto.gov

LEO J. AUBEL
111 REVERSHIRE LANE
LINCOLNSHIRE IL 60069

DEC 05 2005

In re Application of:	:	
LEO J. AUBEL	:	DECISION ON PETITION
Serial No.: 11/145,400	:	TO MAKE SPECIAL
Filed: June 3, 2005	:	
Attorney Docket No: **A3MAMMO**	:	

This is a decision on the petition under 37 C.F.R. § 1.102(c), filed June 03, 2005, to make the above-identified application special.

Petitioner requests that the above-identified application be made special under the accelerated examination procedure set forth in the Manual of Patent Examining Procedure (M.P.E.P.) § 708.02, Section IV: Applicant's Age.

A grantable petition to make special under 37 C.F.R. § 1.102, and in accordance with M.P.E.P. § 708.02, Section IV, must include evidence showing that the applicant is sixty five (65) years of age or more. No fee is required for this petition.

The petition includes a copy of the birth certificate for Leo J. Aubel as evidence that applicant is sixty-five (65) years of age or more.

Accordingly, the petition is GRANTED.

The application is being forwarded t the examiner for expedited prosecution. If the examiner can make this application special without prejudice to any possible interfering applications, and s/he should make a rigid search for such, s/he is authorized to do so for the next action. Should the application be rejected, the application will not be considered special for the subsequent action unless the applicant promptly makes a bona fide effort to place the application in condition for allowance, even if it is necessary to have an interview with the examiner to accomplish this purpose.

If the examiner finds any interfering application for the same subject matter, s/he should consider such application simultaneously with this application and should state in the official letter of such application that s/he is taking it out of its turn because of possible interference.

Should an appeal be taken in this application or should this application become involved in an interference, consideration of the appeal and the interference will be expedited by all Patent and Trademark Office officials concerned, contingent likewise upon diligent prosecution by the applicant.

Inquiries regarding this decision should be directed to Jose Dees at (571) 272-1569.

Jose Dees, Special Programs Examiner
Technology Center 2800
Semiconductors, Electrical and Optical
Systems and Components

UNITED STATES PATENT AND TRADEMARK OFFICE

Commissioner for Patents
United States Patent and Trademark Office
P.O. Box 1450
Alexandria, VA 22313-1450
www.uspto.gov

FELLERS, SNIDER, BLANKENSHIP, BAILEY & TIPPENS, PC
100 NORTH BROADWAY
SUITE 1700
OKLAHOMA CITY, OK 73102-8820

COPY MAILED

SEP 01 2005

OFFICE OF PETITIONS

In re Application of
Wayne Thomas Rickard et al.
Application No. 11/145,403
Filed: August 15, 2005
Attorney Docket No. STL12384

: ON PETITION

This is a decision in response to the petition filed August 15, 2005, under 37 CFR 1.182 to accord the date of receipt of drawings as the filing date.

The petition is **GRANTED**.

The application was deposited June 3, 2005. However, on July 5, 2005, the Office of Initial Patent Examination mailed a Notice of Omitted Items noting that the application had been accorded a filing date of June 3, 2005, but that Figures 8, 9 10 and 11 described in the specification appeared to have been omitted.

The mailing of a "Notice of Omitted Items" permits the applicant to either: (1) promptly establish prior receipt in the PTO of the drawing(s) at issue (generally by way of a date-stamped postcard receipt (MPEP 503)), or (2) promptly submit the omitted drawing(s) in a nonprovisional application and accept the date of such submission as the application filing date. An applicant asserting that the missing drawings were in fact deposited in the PTO with the application papers must file a petition (and the appropriate petition fee) with evidence of such deposit. An applicant desiring to submit the omitted drawings in a nonprovisional application and accept the date of such submission as the application filing date must file any omitted drawing(s) with an oath or declaration in compliance with 37 CFR 1.63 and 1.64 referring to such drawing(s) and a petition under 37 CFR 1.182 (with the petition fee under 37 CFR 1.17(h)) requesting the later filing date within two months of the date of the "Notice of Omitted Items" (37 CFR 1.181(f)).

Finally, the third option is in the absence of electing options 1) or 2) above, to constructively opt to accept the filing date which has been accorded with the papers filed upon application. With option 3), no petition under 37 CFR 1.182 is necessary for that purpose.

In this case, petitioners neither assert nor concede that the missing figures were deposited on June 3, 2005 but instead request that the date of receipt of the drawings (filed with the petition) be accorded as the filing date.

With this, Figures 8, 9, 10 and 11 have been submitted with a newly executed oath or declaration and a preliminary amendment.

Thus, the application is being returned to the Office of Initial Patent Examination to be processed and to correct the filing date to August 15, 2005, using the application papers filed on June 3, 2005 and the papers submitted on August 15, 2005.

Telephone inquiries specific to this matter should be directed to the undersigned Petitions Attorney at (571) 272-3212.

Patricia Faison-Ball

Patricia Faison-Ball
Senior Petitions Attorney
Office of Petitions

UNITED STATES PATENT AND TRADEMARK OFFICE

Commissioner for Patents
United States Patent and Trademark Office
P.O. Box 1450
Alexandria, VA 22313-1450
www.uspto.gov

Fellers, Snider, Blankenship,
Bailey & Tippens
100 North Broadway
Suite 1700
Oklahoma City, OK 73102-8820

MAILED

DEC 1 5 2005

Technology Center 2100

In re Application of:
Wayne R. RICKARD, et al.
Application No. 11/145,403
Filed: June 3, 2005
For: STORAGE-CENTRIC COMPUTER SYSTEM

DECISION ON PETITION TO MAKE SPECIAL

This is a decision on the petition, filed on November 02, 2005 under 37 C.F.R. §102(d) and M.P.E.P. § 708.02(VIII): Accelerated Examination, to make the above-identified application special.

The petition is **DISMISSED**.

M.P.E.P. § 708.02, Section VIII which sets out the prerequisites for a grantable petition for Accelerated Examination under 37 C.F.R. § 102(d) states in relevant part:

> A new application (one which has not received any examination by the examiner) may be granted special status provided that applicant (and this term includes applicant's attorney or agent) complies with each of the following items:
>
> (A) Submits a petition to make special accompanied by the fee set forth in 37 CFR § 1.17(h);
>
> (B) Presents all claims directed to a single invention, or if the Office determines that all the claims presented are not obviously directed to a single invention, will make an election without traverse as a prerequisite to the grant of special status;
>
> (C) Submits a statement(s) that a pre-examination search was made, listing the field of search by class and subclass, publication, Chemical Abstracts, foreign patents, etc. A search made by a foreign patent office satisfies this requirement;
>
> (D) Submits one copy each of the references deemed most closely related to the subject matter encompassed by the claims if said references are not already of record; and
>
> (E) Submits a detailed discussion of the references, which discussion points out, with the particularity required by 37 CFR §§ 1.111 (b) and (c), how the claimed subject matter is patentable over the references.

> In those instances where the request for this special status does not meet all the prerequisites set forth above, applicant will be notified and the defects in the request will be stated. The application will remain in the status of a new application awaiting action in its regular turn. In those instances where a request is defective in one or more respects, applicant will be given one opportunity to perfect the request in a renewed petition to make special. If perfected, the request will then be granted. If not perfected in the first renewed petition, any additional renewed petitions to make special may or may not be considered at the discretion of the Group Special Program Examiner.

Applicant's submission filed November 02, 2005 fails to adequately meet requirement (e) as set forth above. Responsive to requirement (e), applicant must provide a "detailed discussion of the references, which discussion points out, with the particularly requirement by 37 CFR § 1.111(b) and (c), how the claimed subject matter is patentable over the references." Petitioner should ensure that the above discussion is directed to how the language of each of the independent claims is specifically distinguishable and patentable from the references provided pursuant to requirement (e) supra. A general statement, that none of the references teach or suggest the entirety of claims 1, 7 and 13, is not adequately to meet the requirement (e) of the criteria set forth above. Further, it is pointed out that the independent claims 1, 7 and 13 do not specifically disclose that the self contained storage subsystem within a distributed storage system has the on-board intelligence for virtualizing the data storage capacity within the subsystem.

Applicant's petition provided no statement that a pre-examination search was made and no discussions of the references and how the claimed subject matter is patentable over the references.

Accordingly, the petition is **DISMISSED**. Petitioner is given one opportunity to perfect the petition. Any request for reconsideration must be filed within TWO MONTHS of the mail date of this decision.

Until the renewed petition is submitted, the application will be returned to the examiner's docket to await treatment on the merits in the normal order of examination.

Vincent N. Trans
Special Program Examiner
Technology Center 2100
Computer Architecture, Software, and
Information Security
571-272-3613

UNITED STATES PATENT AND TRADEMARK OFFICE

Commissioner for Patents
United States Patent and Trademark Office
P.O. Box 1450
Alexandria, VA 22313-1450
www.uspto.gov

FELLERS, SNIDER, BLANKENSHIP, BAILEY & TIPPENS, P.C.
100 NORTH BROADWAY, SUITE 1700
OKLAHOMA CITY, OK 73102-8820

MAILED

SEP 1 8 2006

TECHNOLOGY CENTER 2100

In re Application of: Rickard, et al.
Application No. 11/145,403
Filed: June 3, 2005
For: STORAGE-CENTRIC COMPUTER SYSTEM

DECISION ON PETITION TO MAKE SPECIAL (ACCELERATED EXAMINATION) UNDER M.P.E.P. §708.02 (VIII)

This is a decision on the Request for Reconsideration filed February 15, 2006 on the petition to make special under 37 C.F.R. §102(d) and M.P.E.P. §708.02(VIII): Accelerated Examination, originally filed on November 2, 2005 and dismissed on December 15, 2005.

The Petition is **GRANTED**.

M.P.E.P. §708.02, Section VIII which sets out the prerequisites for a grantable petition for Accelerated Examination under 37 C.F.R. §1.102(d) states in relevant part:

A new application (one which has not received any examination by the examiner) may be granted special status provided that applicant (and this term includes applicant's attorney or agent) complies with each of the following items:

(a) Submits a petition to make special accompanied by the fee set forth in 37 CFR 1.17(h);

(b) Presents all claims directed to a single invention, or if the Office determines that all the claims presented are not obviously directed to a single invention, will make an election without traverse as a prerequisite to the grant of special status;

(c) Submits a statement(s) that a pre-examination search was made, listing the field of search by class and subclass, publication, Chemical Abstracts, foreign patents, etc. The pre-examination search must be directed to the invention as claimed in the application for which special status is requested. A search made by a foreign patent office satisfies this requirement;

(d) Submits one copy each of the references deemed most closely related to the subject matter encompassed by the claims if said references are not already of record; and

(e) Submits a detailed discussion of the references, which discussion points out, with the particularity required by 37 CFR 1.111 (b) and (c), how the claimed subject matter is patentable over the references.

Petition to Make Special **GRANTED** since all of the requirements for special status under MPEP § 708.02(VIII) have now been met.

The application file is being forwarded to the Examiner for accelerated examination in accordance with M.P.E.P. §708.02, Section VIII. If the application is subsequently allowed, it will be given priority for printing. See M.P.E.P. §1309.

Brian L. Johnson
Special Program Examiner
Technology Center 2100
Computer Architecture, Software and Information Security
571-272-3595

UNITED STATES PATENT AND TRADEMARK OFFICE

Commissioner for Patents
United States Patent and Trademark Office
P.O. Box 1450
Alexandria, VA 22313-1450
www.uspto.gov

GAUTHIER & CONNORS, LLP
225 FRANKLIN STREET
SUITE 2300
BOSTON MA 02110

COPY MAILED

NOV 0 5 2009

OFFICE OF PETITIONS

In re Patent No. 7,388,668	:	
Issue Date: June 17, 2008	:	
Application No. 11/145,420	:	NOTICE UNDER 37 CFR. 1.28(c)
Filed: June 03, 2005	:	
Attorney Docket No. HARVARD7621	:	

This is a notice regarding your request for acceptance of a fee deficiency submission under 37 CFR 1.28. On September 1, 1998, the Court of Appeals for the Federal Circuit held that 37 CFR 1.28(c) is the sole provision governing the time for correction of the erroneous payment of the issue fee as a small entity. **See DH Technology v. Synergystex International, Inc. 154 F.3d 1333, 47 USPQ2d 1865 (Fed. Cir. Sept. 1, 1998).**

The Office no longer investigates or rejects original or reissue applications under 37 CFR 1.56. **1098 Off. Gaz. Pat. Office 502 (January 3, 1989)**. Therefore, nothing in this Notice is intended to imply that an investigation was done.

Your fee deficiency submission under 37 CFR 1.28 is hereby **ACCEPTED**.

This application is no longer entitled to small entity status. Accordingly, all future fees paid in this application must be paid at the large entity rate.

Inquiries related to this communication should be directed to the Michelle R. Eason at (571) 272-4231.

Thurman K. Page

Thurman Page
Petitions Examiner
Office of Petitions

UNITED STATES PATENT AND TRADEMARK OFFICE

UNITED STATES DEPARTMENT OF COMMERCE
United States Patent and Trademark Office
Address: COMMISSIONER FOR PATENTS
P.O. Box 1450
Alexandria, Virginia 22313-1450
www.uspto.gov

PCE INDUSTRY, INC.
ATT. Steven Reiss
288 SOUTH MAYO AVENUE
CITY OF INDUSTRY, CA 91789

Mail Date: 04/21/2010

Applicant	: Yun-Lung Chen	: DECISION ON REQUEST FOR
Patent Number	: 7630745	: RECALCULATION of PATENT
Issue Date	: 12/08/2009	: TERM ADJUSTMENT IN VIEW
Appliction No	: 11/145,436	: OF WYETH AND NOTICE OF INTENT TO
Filed	: 06/03/2005	: ISSUE CERTIFICATE OF CORRECTION
		:

The Request for Recalculation is **GRANTED** to the extent indicated.

The patent term adjustment has been determined to be **1223** days. The USPTO will *sua sponte* issue a certificate of correction reflecting the amount of PTA days determined by the recalculation.

Prior to the issuance of the certificate of correction, the USPTO will afford patentee an opportunity to be heard and request reconsideration. Accordingly, patentee has **one month or thirty (30) days**, whichever is longer, to file a request for reconsideration of this patent term adjustment calculation. See 35 U.S.C. 154(b)(3)(B)(ii) and 37 CFR 1.322(a)(4). No extensions of time will be granted under 37 CFR 1.136.

Patentee should use document code PET.OP if electronically filing a request for reconsideration of this patent term adjustment calculation. The patentee must also include the information required by 37 CFR 1.705(b)(2) and the fee required by 37 CFR 1.18(e). If patentee does not file a timely request for reconsideration of this patent term adjustment calculation including the information required by 37 CFR 1.705(b)(2) and the fee required by 37 CFR 1.18(e), the USPTO will issue a certificate of correction reflecting the PTA determination noted above.

Patentee should be aware that in order to preserve the right to review in the United States District Court for the District of Columbia of the USPTO patent term adjustment determination, patentee must ensure that he or she also take the steps required under 35 U.S.C. 154(b)(4)(A) in a timely manner. Nothing in the request for recalculation should be construed as providing an alternative time frame for commencing a civil action under 35 U.S.C. 154(b)(4)(A).

Any questions concerning this decision should be directed to the Office of Patent Legal Administration at 571-272-7702.

UNITED STATES PATENT AND TRADEMARK OFFICE

UNITED STATES DEPARTMENT OF COMMERCE
United States Patent and Trademark Office
Address: COMMISSIONER FOR PATENTS
P.O. Box 1450
Alexandria, Virginia 22313-1450
www.uspto.gov

ALLEN, DYER, DOPPELT, MILBRATH & GILCHRIST P.A.
1401 CITRUS CENTER 255 SOUTH ORANGE AVENUE
P.O. BOX 3791
ORLANDO, FL 32802-3791

Mail Date: 07/30/2010

Applicant	: Robert Henderson	: DECISION ON REQUEST FOR
Patent Number	: 7649560	: RECALCULATION of PATENT
Issue Date	: 01/19/2010	: TERM ADJUSTMENT IN VIEW
Application No	: 11/145,438	: OF WYETH AND NOTICE OF INTENT TO
Filed	: 06/03/2005	: ISSUE CERTIFICATE OF CORRECTION
		:

The Request for Recalculation is **GRANTED** to the extent indicated.

The patent term adjustment has been determined to be **1265** days. The USPTO will *sua sponte* issue a certificate of correction reflecting the amount of PTA days determined by the recalculation.

Prior to the issuance of the certificate of correction, the USPTO will afford patentee an opportunity to be heard and request reconsideration. Accordingly, patentee has **one month or thirty (30) days**, whichever is longer, to file a request for reconsideration of this patent term adjustment calculation. See 35 U.S.C. 154(b)(3)(B)(ii) and 37 CFR 1.322(a)(4). No extensions of time will be granted under 37 CFR 1.136.

Patentee should use document code PET.OP if electronically filing a request for reconsideration of this patent term adjustment calculation. The patentee must also include the information required by 37 CFR 1.705(b)(2) and the fee required by 37 CFR 1.18(e). If patentee does not file a timely request for reconsideration of this patent term adjustment calculation including the information required by 37 CFR 1.705(b)(2) and the fee required by 37 CFR 1.18(e), the USPTO will issue a certificate of correction reflecting the PTA determination noted above.

Patentee should be aware that in order to preserve the right to review in the United States District Court for the District of Columbia of the USPTO patent term adjustment determination, patentee must ensure that he or she also take the steps required under 35 U.S.C. 154(b)(4)(A) in a timely manner. Nothing in the request for recalculation should be construed as providing an alternative time frame for commencing a civil action under 35 U.S.C. 154(b)(4)(A).

Any questions concerning this decision should be directed to the Office of Patent Legal Administration at 571-272-7702.

UNITED STATES PATENT AND TRADEMARK OFFICE

Commissioner for Patents
United States Patent and Trademark Office
P.O. Box 1450
Alexandria, VA 22313-1450
www.uspto.gov

MAR 0 5 2009

SCHLUMBERGER-DOLL RESEARCH
ATTN: Intellectual Property Law Department
P.O. Box 425045
Cambridge, MA 02142

In re Application of Bikash K. Sinha et al Application No. 11/145,487 Filed: June 3, 2005 For: RADIAL PROFILING OF FORMATION MOBILITY USING HORIZONTAL AND VERTICAL SHEAR SLOWNESS PROFILES	PETITION TO ACCEPT COLOR DRAWINGS/PHOTOGRAPHS

This is a decision on applicant's petition under 37 CFR 1.184(A)(2) filed June 3, 2005 to accept color drawings/photographs.

For the acceptance of color drawings in accordance with 37 CFR 1.184(A)(2), a petition is required which fulfills the following requirements:

(i) The appropriate fee set forth in 1.17(h),
(ii) three (3) sets of color drawings/photographs, and
(iii) amending the specification to contain the following language as the first paragraph in that portion of the specification relating to the brief description of the drawings: "The file of this patent contains at least one drawing executed in color photography. Copies of this patent with color photographs will be provided by the Patent and Trademark Office upon request and payment of necessary fee."

Having met the requirements of 37 CFR 1.184(A)(2), the petition is **GRANTED**.

Any questions or comments with respect to the decision should be forwarded to Supervisory Patent Examiner, Jack Keith at the number listed below.

Jack Keith
Supervisory Patent Examiner
Art Unit 3663
(571) 272-6878

jwk: 3/5/09

UNITED STATES PATENT AND TRADEMARK OFFICE

COMMISSIONER FOR PATENTS
UNITED STATES PATENT AND TRADEMARK OFFICE
P.O. BOX 1450
ALEXANDRIA, VA 22313-1450
www.uspto.gov

FOLEY & LARDNER LLP
975 PAGE MILL ROAD
PALO ALTO CA 94304

In re Application of	:	
KONRADI et al.	:	DECISION ON APPLICATION
Application No. 11/145,489	:	FOR
Filed: June 2, 2005	:	PATENT TERM ADJUSTMENT
Attorney Docket No. 342837-2416	:	

This is a decision on the "REQUEST FOR RECONSIDERATION OF PATENT TERM ADJUSTMENT UNDER 37 C.F.R. §1.705(b)" filed December 5, 2008, which is properly being treated under the provisions of 37 CFR 1.705(b). Applicants request that the determination of patent term adjustment be corrected from 107 days to 430 days. Applicants request this correction on the basis that the Office will take in excess of three years to issue this patent and in light of the recent court decision in Wyeth v. Dudas, No. 07-1492 (D.D.C. September 30, 2008).

As the instant application for patent term adjustment requests reconsideration of the patent term adjustment as it relates to the Office's failure to issue the patent within three years of the filing date, a decision is being **held in abeyance** until after the actual patent date. Knowledge of the actual date the patent issues is required to calculate the amount, if any, of additional patent term patentee is entitled to for Office failure to issue the patent within three years. See 37 CFR 1.703(b).

Applicants are given **TWO (2) MONTHS** from the issue date of the patent to file a written request for reconsideration of the patent term adjustment for Office failure to issue the patent within three years. A copy of this decision should accompany the request. Applicants may seek such consideration without payment of an additional fee. However, as to all other bases

for seeking reconsideration of the patent term adjustment indicated in the patent, all requirements of 37 CFR 1.705(d) must be met. Requests for reconsideration on other bases must be timely filed and must include payment of the required fee.

Rather than file the request for reconsideration of Patent Term Adjustment at the time of the mailing of the notice of allowance, applicants are advised that they may wait until the time of the issuance of the patent and file a request for reconsideration of the patent term pursuant to 37 CFR 1.705(d). The USPTO notes that it does not calculate the amount of time earned pursuant to 37 CFR 1.702(b) until the time of the issuance of the patent and accordingly, the Office will consider any request for reconsideration of the patent term adjustment due to an error in the calculation of 37 CFR 1.702(b) to be timely if the request for reconsideration is filed within two months of the issuance of the patent.

The Office acknowledges submission of the $200.00 fee set forth in 37 CFR 1.18(e). No additional fees are required.

The application is being forwarded to the Office of Data Management for issuance of the patent. The patent term adjustment indicated on the patent (as shown on the Issue Notification mailed about three weeks prior to patent issuance) will include any additional adjustment accrued both for Office delay in issuing the patent more than four months after payment of the issue fee and satisfaction of all outstanding requirements, and for the Office taking in excess of three years to issue the patent (to the extent that the three-year period does not overlap with periods already accorded).

Telephone inquiries specific to this decision should be directed to Senior Petitions Attorney, Christina Tartera Donnell, at (571) 272-3211.

Nancy Johnson
Senior Petitions Attorney
Office of Petitions

UNITED STATES PATENT AND TRADEMARK OFFICE

COMMISSIONER FOR PATENTS
UNITED STATES PATENT AND TRADEMARK OFFICE
P.O. BOX 1450
ALEXANDRIA, VA 22313-1450
www.uspto.gov

AMGEN INC.
LAW DEPARTMENT
1201 AMGEN COURT WEST
SEATTLE WA 98119

COPY MAILED
AUG 3 1 2009
OFFICE OF PETITIONS

In re Application of	:	
Nakayama et al.	:	
Patent Number: 7,482,324	:	
Issue Date: 01/27/2009	:	
Application No. 11/145498	:	ON REQUEST FOR
Filing or 371(c) Date: 06/03/2005	:	RECONSIDERATION OF
Attorney Docket Number: A-629-US-DIV3	:	PATENT TERM ADJUSTMENT

This is in response to the PETITION UNDER 37 CFR 1.705(b) FOR DETERMINATION OF PATENT TERM ADJUSTMENT UNDER 35 U.S.C. 154(b)(1)(A) AND (B), filed March 27, 2009. Applicants submit that the correct patent term adjustment to be indicated on the patent is 509 days, not 271 days as calculated by the Office as of the mailing of the initial determination of patent term adjustment. Applicants request this correction solely on the basis that the Office will take in excess of three years to issue this patent. The request for reconsideration of patent term adjustment is properly treated under 37 CFR 1.705(d).

The request for reconsideration patent term adjustment is **DISMISSED**.

On January 27, 2009, the above-identified application matured into U.S. Patent No. 7,482,324 with a patent term adjustment of 271 days. This application for patent term adjustment was timely filed within two months of the issue date of the patent. See 37 CFR 1.705(d).

Patentees request recalculation of the patent term adjustment as decreed by the ruling in Wyeth v. Dudas, 580 F. Supp. 2d 138, 88 U.S.P.Q. 2d 1538 (D.D.C. 2008). Patentees maintain that the period of adjustment due to the Three Year Delay by the Office, pursuant to 35 U.S.C. 154(b)(1)(B) is 238 days, and the period of adjustment due to examination delay, pursuant to 35 U.S.C. 154(b)(1)(A), is 271. The total of both 35 U.S.C. 154(b)(1)(A) and (B), is 509 days.

The 238-day period is calculated based on the application having been filed under 35 U.S.C. 111(a) on June 3, 2005, and issuing on January 27, 2009, three (3) years and 238 days later. Patentees assert that in addition to this 238-day period, they are entitled to a period of adjustment due to examination delay pursuant to 37 CFR 1.702(a) totalling 271 days. This 271-day period is the result of a period of delay of 412 days for the failure by the Office to mail at least one of a notification under 35 U.S.C. 132 not later than fourteen months after the date on which

application was filed under 35 U.S.C. 111(a), pursuant to 37 CFR 1.702(a)(1), reduced 141 days for applicants' failure to engage in reasonable efforts to conclude prosecution.

Under 37 CFR 1.703(f), patentees are entitled to a period of patent term adjustment equal to the period of delays based on the grounds set forth in 37 CFR 1.702 reduced by the period of time equal to the period of time during which patentees failed to engage in reasonable efforts to conclude prosecution pursuant to 37 CFR 1.704. In other words, patentees are entitled to the period of Office delay reduced by the period of applicant delay.

The Office agrees that as of the issuance of the patent on January 27, 2009, the application was pending three years and 238 days after its filing date. The Office agrees that the action detailed above was not taken within the specified time frame, and thus, the entry of a period of adjustment of 412 days is correct. At issue is whether patentees should accrue 238 days of patent term adjustment for the Office taking in excess of three years to issue the patent, as well as 412 days for Office failure to take a certain action within a specified time frame (or examination delay).

The Office contends that the 238 days of delay in issuance of the patent overlap with the 412 days of delay attributed to examination delay. Patentees' calculation of the period of overlap is inconsistent with the Office's interpretation of this provision. 35 U.S.C. 154(b)(2)(A) limits the adjustment of patent term, as follows:

> To the extent that the periods of delay attributable to grounds specified in paragraph (1) overlap, the period of any adjustment granted under this subsection shall not exceed the actual number of days the issuance of the patent was delayed.

Likewise, 35 CFR 1.703(f) provides that:

> To the extent that periods of delay attributable to the grounds specified in § 1.702 overlap, the period of adjustment granted under this section shall not exceed the actual number of days the issuance of the patent was delayed.

As explained in *Explanation of 37 CFR 1.703(f) and of the United States Patent and Trademark Office Interpretation of 35 U.S.C. 154(b)(2)(A)*, 69 Fed. Reg. 34283 (June 21, 2004), the Office interprets 35 U.S.C. 154(b)(2)(A) as permitting either patent term adjustment under 35 U.S.C. 154(b)(1)(A)(i)-(iv), or patent term adjustment under 35 U.S.C. 154(b)(1)(B), but not as permitting patent term adjustment under both 35 U.S.C. 154(b)(1)(A)(i)-(iv) and 154(b)(1)(B). Accordingly, the Office implements the overlap provision as follows:

> If an application is entitled to an adjustment under 35 U.S.C. 154(b)(1)(B), the entire period during which the application was pending (except for periods excluded under 35 U.S.C. 154(b)(1)(B)(i)-(iii)), and not just the period beginning three years after the actual filing date of the application, is the period of delay under 35 U.S.C. 154(b)(1)(B) in determining whether periods of delay overlap under 35 U.S.C. 154(b)(2)(A). Thus, any

> days of delay for Office issuance of the patent more than 3 years after the filing date of the application, which overlap with the days of patent term adjustment accorded prior to the issuance of the patent will not result in any additional patent term adjustment. See 35 U.S.C. 154(b)(1)(B), 35 U.S.C. 154(b)(2)(A), and 37 CFR § 1.703(f). See *Changes to Implement Patent Term Adjustment Under Twenty Year Term; Final Rule*, 65 Fed. Reg. 56366 (Sept. 18, 2000). See also *Revision of Patent Term Extension and Patent Term Adjustment Provisions; Final Rule*, 69 Fed. Reg. 21704 (April 22, 2004), 1282 Off. Gaz. Pat. Office 100 (May 18, 2004). See also *Explanation of 37 CFR 1.703(f) and of the United States Patent and Trademark Office Interpretation of 35 U.S.C. 154(b)(2)(A),* 69 Fed. Reg. 34283 (June 21, 2004).

The current wording of § 1.703(f) was revised in response to the misinterpretation of this provision by a number of Patentees. The rule was slightly revised to more closely track the corresponding language of 35 U.S.C. 154(b)(2)(A). The relevant portion differs only to the extent that the statute refers back to provisions of the statute whereas the rule refers back to sections of the rule. This was not a substantive change to the rule nor did it reflect a change of the Office's interpretation of 35 U.S.C. 154(b)(2)(A). As stated in the *Explanation of 37 CFR 1.703(f) and of the United States Patent and Trademark Office Interpretation of 35 U.S.C. 154(b)(2)(A)*, the Office has consistently taken the position that if an application is entitled to an adjustment under the three-year pendency provision of 35 U.S.C. 154(b)(1)(B), the entire period during which the application was pending before the Office (except for periods excluded under 35 U.S.C. 154(b)(1)(B)(i)-(iii)), and not just the period beginning three years after the actual filing date of the application, is the relevant period under 35 U.S.C. 154(b)(1)(B) in determining whether periods of delay "overlap" under 35 U.S.C. 154(b)(2)(A).

This interpretation is consistent with the statute. Taken together the statute and rule provide that to the extent that periods of delay attributable to grounds specified in 35 U.S.C. 154(b)(1) and in corresponding § 1.702 overlap, the period of adjustment granted shall not exceed the actual number of days the issuance of the patent was delayed. The grounds specified in these sections cover the A) guarantee of prompt Patent and Trademark Office responses, B) guarantee of no more than 3-year application pendency, and C) guarantee or adjustments for delays due to interference, secrecy orders and appeals. A section by section analysis of 35 U.S.C. 154(b)(2)(A) specifically provides that:

> Section 4402 imposes limitations on restoration of term. In general, pursuant to [35 U.S.C.] 154(b)(2)(A)-(C), total adjustments granted for restorations under [35 U.S.C. 154](b)(1) are reduced as follows: (1) To the extent that there are multiple grounds for extending the term of a patent that may exist simultaneously (e.g., delay due to a secrecy order under [35 U.S.C.] 181 and administrative delay under [35 U.S.C.] 154(b)(1)(A)), the term should not be extended for each ground of delay but only for the actual number of days that the issuance of a patent was delayed; See 145 Cong. Rec. S14,718[1]

[1] The AIPA is title IV of the Intellectual Property and Communications Omnibus Reform Act of 1999 (S. 1948), which was incorporated and enacted as law as part of Pub. L. 106-113. The Conference Report for H.R. 3194, 106th Cong. 1st Sess. (1999), which resulted in Pub. L. 106-113, does not contain any discussion (other than the incorporated language) of S. 1948. A section-

As such, the period for over three-year pendency does not overlap only to the extent that the actual dates in the period beginning three years after the date on which the application was filed overlap with the actual dates in the periods for failure of the Office to take action within specified time frames. In other words, consideration of the overlap does not begin three years after the filing date of the application.

In this instance, the relevant period under 35 U.S.C. 154(b)(1)(B) in determining whether periods of delay "overlap" under 35 U.S.C. 154(b)(1)(A) is the entire period during which the application was pending before the Office, June 3, 2005, to the date the patent issued on January 27, 2009. Prior to the issuance of the patent, 412 days of patent term adjustment were accorded for the Office failing to respond within a specified time frame during the pendency of the application. All of the 238 days for Office delay in issuing the patent overlap with the 412 days of Office delay. During that time, the issuance of the patent was delayed by 412 days, not 238 days + 412 days. The Office took 14 months and 412 days to issue a first Office action. Otherwise, the Office took all actions set forth in 37 CFR 1.702(a) within the prescribed timeframes. Nonetheless, given the initial 412 days of Office delay and the time allowed within the time frames for processing and examination, the application issued three years and 238 days after its filing date. The Office did not delay 238 days and then delay an additional 412 days. Accordingly, 412 days of patent term adjustment was properly entered because the period of delay of 238 days attributable to the delay in the issuance of the patent overlaps with the adjustment of 412 days attributable to grounds specified in § 1.702(a).

In view thereof, no adjustment to the patent term will be made.

The Office acknowledges submission of the $200.00 fee set forth in 37 CFR 1.18(e). No additional fees are required.

Telephone inquiries specific to this matter should be directed to Attorney Derek Woods, at (571) 272-3232.

Alesia Brown
Senior Petitions Attorney
Office of Petitions
Office of the Deputy Commissioner
for Patent Examination Policy

---

by-section analysis of S. 1948, however, was printed in the Congressional Record at the request of Senator Lott, See 145 Cong. Rec. S14,708-26 (1999)(daily ed. Nov. 17, 1999).

SPE RESPONSE FOR CERTIFICATE OF CORRECTION

Paper No.: _____

DATE : 1-9-09

TO SPE OF : ART UNIT 1639

SUBJECT : Request for Certificate of Correction for Appl. No.: 11145507 Patent No.: RE39887E

Please respond to this request for a certificate of correction within 7 days.

FOR IFW FILES:

Please review the requested changes/corrections as shown in the **COCIN** document(s) in the IFW application image. No new matter should be introduced, nor should the scope or meaning of the claims be changed.

Please complete the response (see below) and forward the completed response to scanning using document code **COCX**.

FOR PAPER FILES:

Please review the requested changes/corrections as shown in the attached certificate of correction. Please complete this form (see below) and forward it with the file to:

Certificates of Correction Branch (CofC)
South Tower - 9A22
Palm Location 7580

Valerie Jackson
Certificates of Correction Branch
703-308-9390 ext. 114

Thank You For Your Assistance **Certificates of Correction Branch**

The request for issuing the above-identified correction(s) is hereby:

Note your decision on the appropriated box.

■ **Approved**	All changes apply.
☐ **Approved in Part**	Specify below which changes **do not** apply.
☐ **Denied**	State the reasons for denial below.

Comments:

/ Christopher S. F. Low /
Supervisory Patent Examiner, Art Unit 1639

UNITED STATES PATENT AND TRADEMARK OFFICE

Commissioner for Patents
United States Patent and Trademark Office
P.O. Box 1450
Alexandria, VA 22313-1450
www.uspto.gov

WYETH
PATENT LAW GROUP
5 GIRALDA FARMS
MADISON, NJ 07940

COPY MAILED

JAN 24 2007

OFFICE OF PETITIONS

In re Application of	:	
Joseph J. Hlavka et al	:	
Application No. 11/145,508	:	DECISION ON PETITION
Filed: June 3, 2005	:	
Attorney Docket No. **ACY31682-02 REI**	:	

This is a decision on the petition under 37 CFR 1.314, filed January 8, 2007, to defer issuance of the patent.

The petition is **GRANTED**.

Issuance will be deferred for a period of one month from the date of this decision. At the end of this period, the application will be referred to Publishing Division to be processed into a patent.

If an additional deferral period is required, another petition and fee should be promptly submitted. The petition must include a showing of extraordinary circumstances. See MPEP 1306.01.

Further correspondence with respect to this matter should be addressed as follows:

By mail: Mail Stop PETITION
Commissioner for Patents
Post Office Box 1450
Alexandria, VA 22313-1450

By hand: Customer Service Window
Mail Stop Petitions
Randolph Building
401 Dulany Street
Alexandria, VA 22314

By Fax: (571) 273-8300
ATTN: Office of Petitions

Telephone inquiries should be directed to the undersigned at (571) 272-3218.

Frances Hicks
Petitions Examiner
Office of Petitions

UNITED STATES PATENT AND TRADEMARK OFFICE

Commissioner for Patents
United States Patent and Trademark Office
P.O. Box 1450
Alexandria, VA 22313-1450
www.uspto.gov

WYETH
PATENT LAW GROUP
5 GIRALDA FARMS
MADISON, NJ 07940

COPY MAILED

JUN 0 4 2007

OFFICE OF PETITIONS

In re Application of	:	
Joseph J. Hlavka et al	:	
Application No. 11/145,508	:	DECISION ON PETITION
Filed: June 3, 2005	:	
Attorney Docket No. ACY31682-02 REI	:	

This is a decision on the renewed petition under 37 CFR 1.314, filed February 20, 2007, and resubmitted on March 22, 2007, to defer issuance of the patent.

The petition is **GRANTED**.

Since the requested deferral period has now passed, this application will be referred to Publishing Division to be processed into a patent.

Telephone inquiries should be directed to the undersigned at (571) 272-3218.

Frances Hicks
Petitions Examiner
Office of Petitions

UNITED STATES PATENT AND TRADEMARK OFFICE

Commissioner for Patents
United States Patent and Trademark Office
P.O. Box 1450
Alexandria, VA 22313-1450
www.uspto.gov

WYETH
PATENT LAW GROUP
5 GIRALDA FARMS
MADISON NJ 07940

COPY MAILED

JUL 12 2007

OFFICE OF PETITIONS

In re Application of	:
Joseph J. Hlavka et al.	:
Application No. 11/145,508	: ON PETITION
Filed: June 3, 2005	:
Docket No.: ACY31682-02 REI	:

This is a decision on the petition under 37 CFR 1.314, filed June 16, 2007, to defer issuance of the patent for 180 days.

The petition is GRANTED to the extent that the period of deferral is extended to August 31, 2007.

As noted in MPEP 1306.01, while the usual period of deferral is one month, upon a showing of special circumstances, as here, that period of deferral may be increased.

As a condition of this extraordinary relief, however, petitioner must file or transmit a request for termination of the deferral no later than August 31, 2007, in the form of a petition under 37 CFR 1.181 (no fee) directed to the Office of Petitions.

Should petitioner then need an additional deferral, then petitioner may wish to consider filing a petition to withdraw from issue under 37 CFR 1.313(c)(2) along with an RCE (and submission) and a petition under 37 CFR 1.103(c) for suspension of prosecution or under 37 CFR 1.313(c)(3).

Telephone inquiries related to this decision should be directed to the undersigned at (571) 272-3218.

Frances Hicks
Petitions Examiner
Office of Petitions

UNITED STATES PATENT AND TRADEMARK OFFICE

Commissioner for Patents
United States Patent and Trademark Office
P.O. Box 1450
Alexandria, VA 22313-1450
www.uspto.gov

WYETH
PATENT LAW GROUP
5 GIRALDA FARMS
MADISON NJ 07940

COPY MAILED

JAN 1 8 2008

OFFICE OF PETITIONS

In re Application of	:	
Joseph J. Hlavka et al	:	
Application No. 11/145,508	:	DECISION ON PETITION
Filed: June 3, 2005	:	
Docket No. ACY31682-02 REI	:	

This is a decision on the petition under 37 CFR 1.314, filed August 29, 2007, to defer issuance of the patent.

The petition is **GRANTED**.

Since the requested deferral period has now passed, this application will be referred to the Office of Data Management to be processed into a patent.

Telephone inquiries should be directed to the undersigned Desk at (571) 272-3208.

Karen Creasy

Karen Creasy
Petitions Examiner
Office of Petitions

UNITED STATES PATENT AND TRADEMARK OFFICE

Commissioner for Patents
United States Patent and Trademark Office
P.O. Box 1450
Alexandria, VA 22313-1450
www.uspto.gov

Paper No.

SCHNECK & SCHNECK
P.O. BOX 2-E
SAN JOSE CA 95109-0005

COPY MAILED

JAN 22 2009

OFFICE OF PETITIONS

In re Application of	:	
Ayers et al.	:	DECISION ON
Application No. 11/145,516	:	PETITION
Filed: June 3, 2005	:	
Attorney Docket No. BUL-001	:	

This is a decision on the PETITION FOR REVIVAL OF AN APPLICATION FOR PATENT ABANDONED UNINTENTIONALLY UNDER 37 CFR 1.137(b), filed September 30, 2008.

The petition is **GRANTED**.

The above-identified application was abandoned for failure to timely file a proper reply to the final Office action mailed March 26, 2008. This Office action set a shortened statutory period for reply of three (3) months from the mail date of the action. An amendment was filed on August 18, 2008, along with the required extension of time. However, the amendment was determined not to place the application in condition for reply. No further amendment (or other paper) responsive to the final Office action was filed. No proper reply having been received and no extension of time obtained the application became abandoned effective August 27, 2008. The instant petition was filed prior to the mailing of a courtesy Notice of Abandonment.

On petition, petitioner submitted a Request for Continued Examination (RCE) and submission under §1.114 (in the form of the previously submitted amendment); paid the petition fee; and made the required statement of unintentional delay.

Technology Center AU 3635 has been advised of this decision. The application is, thereby, forwarded to the examiner for consideration of the RCE and submission submitted on petition filed September 30, 2008.

Telephone inquiries concerning this decision should be directed to the undersigned at (571) 272-3219.

Nancy Johnson
Senior Petitions Attorney
Office of Petitions

UNITED STATES PATENT AND TRADEMARK OFFICE

Commissioner for Patents
United States Patent and Trademark Office
P.O. Box 1450
Alexandria, VA 22313-1450
www.uspto.gov

Townsend and Townsend and Crew, LLP
Two Embarcadero Center
8th Floor
San Francisco, CA 94111-3834

COPY MAILED

AUG 29 2007

OFFICE OF PETITIONS

In re Application of	:	
W. Jack Harper	:	
Application No. 11/145,522	:	DECISION ON PETITION
Filed: June 3, 2005	:	TO WITHDRAW
Attorney Docket No. 040172-001510US	:	FROM RECORD
	:	

This is a decision on the Request to Withdraw as attorney or agent of record under 37 C.F.R. § 1.36(b), filed April 20, 2007.

The request is **APPROVED**.

A grantable request to withdraw as attorney/agent of record must be signed by every attorney/agent seeking to withdraw or contain a clear indication that one attorney is signing on behalf of another/others. A request to withdraw will not be approved unless at least 30 (thirty) days would remain between the date of approval and the later of the expiration date of a time to file a response or the expiration date of the maximum time period which can be extended under 37 C.F.R. § 1.136(a).

The request was signed by William F. Vobach on behalf of all attorneys of record. All attorneys/agents have been withdrawn. Applicant is reminded that there is no attorney of record at this time.

The correspondence address of record has been changed and the new correspondence address is the address indicated below.

There is an outstanding Office action mailed May 15, 2007 that requires a reply from the applicant.

Telephone inquiries concerning this decision should be directed to Terri Williams at 571-272-2991.

T. Williams

Terri Williams
Petitions Examiner
Office of Petitions

cc: **BSI2000**
1153 Bergen Parkway
Evergreen, CO 80439

UNITED STATES PATENT AND TRADEMARK OFFICE

UNITED STATES DEPARTMENT OF COMMERCE
United States Patent and Trademark Office
Address: COMMISSIONER FOR PATENTS
P.O. Box 1450
Alexandria, Virginia 22313-1450
www.uspto.gov

APPLICATION NUMBER	FILING OR 371 (c) DATE	FIRST NAMED APPLICANT	ATTY. DOCKET NO./TITLE
11/145,522	06/03/2005	W. Jack Harper	040172-001510US

CONFIRMATION NO. 3482

OC000000025596322

20350
TOWNSEND AND TOWNSEND AND CREW, LLP
TWO EMBARCADERO CENTER
EIGHTH FLOOR
SAN FRANCISCO, CA 94111-3834

Date Mailed: 08/29/2007

NOTICE REGARDING CHANGE OF POWER OF ATTORNEY

This is in response to the Power of Attorney filed 04/20/2007.

- The withdrawal as attorney in this application has been accepted. Future correspondence will be mailed to the new address of record. 37 CFR 1.33.

G. Williams

Office of Initial Patent Examination (571) 272-4000, or 1-800-PTO-9199
FORMER ATTORNEY/AGENT COPY

UNITED STATES PATENT AND TRADEMARK OFFICE

Commissioner for Patents
United States Patent and Trademark Office
P.O. Box 1450
Alexandria, VA 22313-1450
www.uspto.gov

COPY MAILED

OCT 18 2005

OFFICE OF PETITIONS

GREENLEE WINNER AND SULLIVAN
4875 PEARL EAST CIRCLE
SUITE 200
BOULDER CO 80301

In re Application of	:
John A. Rogers et al	:DECISION GRANTING FILING
Application No. 11/145,542	:DATE OF **June 2, 2005**
Filed: June 2, 2005	:
Attorney Docket No. 38-04B	:

This is a decision on the petition under 37 CFR 1.10, filed July 14, 2005, requesting that the above-identified application be accorded a filing date of June 2, 2005, rather than the presently accorded date of June 3, 2005.

Petitioner requests the earlier filing date on the basis that the application was purportedly deposited with the U.S. Postal Service (USPS) as Express Mail on June 2, 2005, pursuant to 37 CFR 1.10. In support, petitioner has submitted a copy of the Express Mail Label showing the Date Accepted of June 2, 2005 and the stamp date of June 2, 2005 by the USPS. Additionally, a copy of the Intranet Track Confirmation verifies the acceptance date as June 2, 2005 in Boulder, CO., for Express Mail label No. EV642816388US. The same Express Mail receipt number appears on the original "Application Transmittal."

In view of the above, it is concluded that the application was deposited as "Express Mail" with the USPS on June 2, 2005.

The petition is **granted**.

The application file is being referred to the Office of Initial Patent Examination for processing with a filing date of **June 2, 2005,** and for the mailing of a corrected Filing Receipt.

Telephone inquiries specific to this decision on petition should be directed to the undersigned at (571) 272-3208.

Karen Creasy

Karen Creasy
Petitions Examiner
Office of Petitions
Office of the Deputy Commissioner
for Patent Examination Policy

UNITED STATES PATENT AND TRADEMARK OFFICE

Commissioner for Patents
United States Patent and Trademark Office
P.O. Box 1450
Alexandria, VA 22313-1450
www.uspto.gov

TOWNSEND AND TOWNSEND CREW, LLP
TWO EMBARCADERO CENTER
EIGHTH FLOOR
SAN FRANCISCO, CA 94111-3834

COPY MAILED

AUG 09 2007

OFFICE OF PETITIONS

In re Application of

Kevin Wilson
Application No. 11/145,549
Filed: June 3, 2005
Attorney Docket No. 040172-002110US

DECISION ON PETITION
TO WITHDRAW
FROM RECORD

This is a decision on the Request to Withdraw as attorney or agent of record under 37 C.F.R § 1.36(b), filed April 20, 2007.

The request is **APPROVED**.

A grantable request to withdraw as attorney/agent of record must be signed by every attorney/agent seeking to withdraw or contain a clear indication that one attorney is signing on behalf of another/others. A request to withdraw will not be approved unless at least 30 (thirty) days would remain between the date of approval and the later of the expiration date of a time to file a response or the expiration date of the maximum time period which can be extended under 37 C.F.R. § 1.136(a).

The request was signed by William F. Vobach on behalf of all attorneys of record. All attorneys have been withdrawn.

The correspondence address of record has been changed and the new correspondence address is the address indicated below.

There are no outstanding Office actions at this time.

Telephone inquiries concerning this decision should be directed to Kimberly Inabinet at 571-272-4618.

Frances Hicks
Petitions Examiner
Office of Petitions

cc: BSI2000, Inc.
1153 Bergen Parkway
Suite M350
Evergreen, CO 80439

UNITED STATES PATENT AND TRADEMARK OFFICE

UNITED STATES DEPARTMENT OF COMMERCE
United States Patent and Trademark Office
Address: COMMISSIONER FOR PATENTS
P.O. Box 1450
Alexandria, Virginia 22313-1450
www.uspto.gov

APPLICATION NUMBER	FILING OR 371 (c) DATE	FIRST NAMED APPLICANT	ATTY. DOCKET NO./TITLE
11/145,549	06/03/2005	Kevin Wilson	040172-002110US

CONFIRMATION NO. 2727

OC000000025282899

20350
TOWNSEND AND TOWNSEND AND CREW, LLP
TWO EMBARCADERO CENTER
EIGHTH FLOOR
SAN FRANCISCO, CA 94111-3834

Date Mailed: 08/09/2007

NOTICE REGARDING CHANGE OF POWER OF ATTORNEY

This is in response to the Power of Attorney filed 04/20/2007.

- The withdrawal as attorney in this application has been accepted. Future correspondence will be mailed to the new address of record. 37 CFR 1.33.

Kimberly Gravinet
Office of Initial Patent Examination (571) 272-4000, or 1-800-PTO-9199
FORMER ATTORNEY/AGENT COPY

UNITED STATES PATENT AND TRADEMARK OFFICE

Commissioner for Patents
United States Patent and Trademark Office
P.O. Box 1450
Alexandria, VA 22313-1450
www.uspto.gov

ROSSI, KIMMS & MCDOWELL LLP.
20609 GORDON PARK SQUARE, SUITE 150
ASHBURN VA 20147

MAILED

APR 27 2010

OFFICE OF PETITIONS

In re Application of
Toshiyuki Matsumoto
Application No. 11/145,556
Filed: June 3, 2005
Attorney Docket No.: CANO:197

ON PETITION

This is a decision on the petition filed February 25, 2010, under 37 CFR 1.181, to withdraw the holding of abandonment for the above-identified application.

The petition under 37 CFR 1.181 is **DISMISSED**.

Any request for reconsideration of this decision must be submitted within **TWO (2) MONTHS** from the mail date of this decision. Extensions of time under 37 CFR 1.136(a) are permitted. The reconsideration request should include a cover letter entitled "Renewed Petition under 37 CFR 1.181," or, as explained in more detail below, "...under 37 CFR 1.137(a)" or (b). This is not a final agency decision.

This application was held abandoned for failure to pay the issue fee on or before February 5, 2010 as was required by the Notice of Allowance mailed November 5, 2009 and which set a three month period for reply. Accordingly, a Notice of Abandonment was mailed March 1, 2010 after the payment of the issue fee on February 12, 2010 and after the filing of the instant petition.

Petitioner asserts that on the due date of the issue fee, the USPTO closed early due to emergency weather conditions and the office of applicant's representative also closed early due to the emergency weather conditions, and thus the payment of the issue fee was not made on February 5, 2010 when due but was made on February 12, 2010, the next business day.

Petitioner is advised that the only official closing of the United States Patent and Trademark Office occurred Monday, February 8, 2010 through Thursday, February 11, 2010.

The following notice was placed on the USPTO web site at www.uspto.gov and published in the Official Gazette:

> In view of the official closing of the Federal government offices in the Washington, D.C. metropolitan area, including the United States Patent and Trademark Office (USPTO), from Monday, February 8, 2010 through Thursday, February 11, 2010, the USPTO will consider each day from Monday, February 8, 2010 through Thursday, February 11, 2010, to be a "Federal holiday within the District of Columbia" under 35 U.S.C. § 21(b) and 37 C.F.R. §§ 1.6, 1.7, 1.9, 2.2(d), 2.195 and 2.196. Any action or fee due from Monday, February 8, 2010 through Thursday, February 11, 2010 (or the preceding Saturday (February 6, 2010) or Sunday (February 7, 2010)) will be considered as timely for the purposes of, e.g., 15 U.S.C. §§ 1051(b), 1058, 1059, 1062(b), 1063, 1064, 1126(d), or 35 U.S.C. §§ 119, 120, 133 and 151, if the action is taken, or the fee paid, on the next succeeding business day on which the USPTO is open. 37 C.F.R. §§ 1.7(a) and 2.196.
>
> 37 C.F.R. §§ 1.6(a)(2), 2.195(a)(4) and 2.198 provide that correspondence deposited in the Express Mail Service of the United States Postal Service (USPS) in accordance with 37 C.F.R. §§ 1.10 or 2.198 will be considered filed on the date of deposit (as shown by the "date-in" on the Express Mail mailing label) with the USPS. Thus, any paper or fee properly deposited in the Express Mail Service of the USPS from Monday, February 8, 2010 through Thursday, February 11, 2010, in accordance with 37 C.F.R. §§ 1.10 or 2.198 will be considered filed on its respective date of deposit in the Express Mail Service of the USPS (as shown by a "date-in" of February 8, 2010, February 9, 2010, February 10, 2010, or February 11, 2010, on the Express Mail mailing label).
>
> 37 C.F.R. § 1.6(a)(4) and 37 C.F.R. § 2.195(a)(2) provide that patent and trademark-related correspondence transmitted electronically to the USPTO will be considered filed in the USPTO on the date the USPTO received the electronic transmission. Thus, any patent and/or trademark-related correspondence transmitted electronically to the USPTO will be considered filed in the USPTO on the date the USPTO received the complete electronic transmission, even if the USPTO is closed on that day. Correspondence successfully received by the USPTO through the patent Electronic Filing System (EFS-Web) will receive the date as indicated on the Acknowledgement Receipt. Trademark Electronic Application System (TEAS) filings will receive the date indicated in the e-mail confirmation sent at the time of a successful filing.

Petitioner had the option of filing the response, paying the issue fee, with a certificate of mail, by facsimile transmission, via EFS-Web or by Express Mail.

Any paper or fee required to be filed in the U.S. Patent and Trademark Office will be considered filed in the Office on the date on which it was deposited with the United

States Postal Service or would have been deposited with the United States Postal Service but for postal service interruptions or emergencies designated by the Commissioner. See 35 USC 21.

Petitioner's argument has been considered but not found to be persuasive.

In view of the above, and since the arguments presented and evidence submitted do not substantiate a finding that the response was timely filed due to early closing by the USPTO and Postal Interruption, the holding of abandonment will not be withdrawn and the notice of abandonment will not be vacated.

Petitioner may wish to file a petition to revive under 37 CFR 1.137(a) or (b). Section 1.137(b) now provides that where the delay in reply was unintentional, a petition may be filed to revive an abandoned application or a lapsed patent pursuant to 37 CFR 1.137(b). A grantable petition pursuant to 37 CFR 1.137(b) must be accompanied by:

> (1) the required reply, unless previously filed. In a nonprovisional application abandoned for failure to prosecute, the required reply may be met by the filing of a continuing application. In an application or patent, abandoned or lapsed for failure to pay the issue fee or any portion thereof, the required reply must be the payment of the issue fee or any outstanding balance thereof;
>
> (2) the petition fee as set forth in 37 CFR 1.17(m);
>
> (3) a statement that the entire delay in filing the required reply from the due date for the reply until the filing of a grantable petition pursuant to 37 CFR 1.137(b) was unintentional. The Director may require additional information where there is a question whether the delay was unintentional; and
>
> (4) any terminal disclaimer (and fee as set forth in 37 CFR 1.20(d)) required pursuant to 37 CFR 1.137(c)).

The filing of a petition under the unintentional standard cannot be intentionally delayed and therefore should be filed promptly. A person seeking revival due to unintentional delay cannot make a statement that the delay was unintentional unless the entire delay, including the delay from the date it was discovered that the application was abandoned until the filing of the petition to revive under 37 CFR 1.137(b), was unintentional. A statement that the delay was unintentional is not appropriate if petitioner intentionally delayed the filing of a petition for revival under 37 CFR 1.137(b).

Further correspondence with respect to this matter should be addressed as follows:

By mail: Mail Stop Petition
Commissioner for Patents
P.O. Box 1450
Alexandria, VA 22313-1450

By FAX: (571) 273-8300

Telephone inquiries concerning this matter may be directed to the undersigned Petitions Attorney at (571) 272-3212.

Patricia Faison-Ball

Patricia Faison-Ball
Senior Petitions Attorney
Office of Petitions

UNITED STATES PATENT AND TRADEMARK OFFICE

Commissioner for Patents
United States Patent and Trademark Office
P.O. Box 1450
Alexandria, VA 22313-1450
www.uspto.gov

ROSSI, KIMMS & MCDOWELL LLP
20609 GORDON PARK SQUARE, SUITE 150
ASHBURN, VA 20147

MAILED

JUN 08 2010

OFFICE OF PETITIONS

In re Application of
Toshiyuki Matsumoto
Application No. 11/145,556
Filed: June 3, 2005
Attorney Docket No. CANO-0197

DECISION ON PETITION

This is a decision on the petition under the unintentional provisions of 37 CFR 1.137(b), filed May 19, 2010, to revive the above-identified application.

This application became abandoned for failure to timely pay the issue and publication fees on or before February 5, 2010, as required by the Notice of Allowance and Fee(s) Due, mailed November 5, 2009. Accordingly, the date of abandonment of this application is February 6, 2010.

The petition satisfies the requirements of 37 CFR 1.137(b) in that petitioner has supplied (1) the reply in the form of payment of the issue fee of $1510 and the publication fee of $300, (2) the petition fee of $1620; and (3) a proper statement of unintentional delay.

In view of the above, the petition is **GRANTED**.

Telephone inquiries concerning this decision should be directed to undersigned at (571) 272-1642. All other inquiries concerning this application should be directed to the Office of Data Management at their hotline 571-272-4200.

This application is being referred to the Office of Data Management for processing into a patent.

/AMW/
April M. Wise
Petitions Examiner
Office of Petitions

UNITED STATES PATENT AND TRADEMARK OFFICE

Commissioner for Patents
United States Patent and Trademark Office
P.O. Box 1450
Alexandria, VA 22313-1450
www.uspto.gov

COPY MAILED

SEP 09 2008

OFFICE OF PETITIONS

HELLER EHRMAN LLP
4350 LA JOLLA VILLAGE DRIVE, 7TH FLOOR
SAN DIEGO, CA 92122

In re Application of
SESHAGIRI, Somasekar
Application No. 11/145,566
Filed: June 02, 2005
Attorney Docket No. **39766-0153A**

DECISION ON PETITION TO WITHDRAW FROM RECORD

This is a decision on the Request to Withdraw as attorney or agent of record under 37 C.F.R. § 1.36(b), filed July 08, 2008.

The request is not approved because it is **moot**.

A review of the file record indicates that the power of attorney to HELLER EHRMAN LLP has been revoked by the assignee of the patent application on June 20, 2008. Accordingly, the request to withdraw under 37 C.F.R. § 1.36(b) is moot.

All future communications from the Office will continue to be directed to the below-listed address until otherwise notified by applicant.

Telephone inquires concerning this decision should be directed to Tredelle Jackson at 571-272-2783.

Tredelle D. Jackson
Paralegal Specialist
Office of Petitions

cc: **GOODWIN PROCTER LLP**
ATTN: PATENT ADMINISTRATOR
135 COMMONWEALTH DRIVE
MENLO PARK CA 94025-1105

UNITED STATES PATENT AND TRADEMARK OFFICE

UNITED STATES DEPARTMENT OF COMMERCE
United States Patent and Trademark Office
Address: COMMISSIONER FOR PATENTS
P.O. Box 1450
Alexandria, Virginia 22313-1450
www.uspto.gov

GREENLEE WINNER AND SULLIVAN P C
4875 PEARL EAST CIRCLE
SUITE 200
BOULDER, CO 80301

Mail Date: 04/21/2010

Applicant	: Ralph G. Nuzzo	: DECISION ON REQUEST FOR
Patent Number	: 7622367	: RECALCULATION of PATENT
Issue Date	: 11/24/2009	: TERM ADJUSTMENT IN VIEW
Appliction No	: 11/145,574	: OF WYETH AND NOTICE OF INTENT TO
Filed	: 06/02/2005	: ISSUE CERTIFICATE OF CORRECTION
		:

The Request for Recalculation is **GRANTED** to the extent indicated.

The patent term adjustment has been determined to be **857** days. The USPTO will *sua sponte* issue a certificate of correction reflecting the amount of PTA days determined by the recalculation.

Prior to the issuance of the certificate of correction, the USPTO will afford patentee an opportunity to be heard and request reconsideration. Accordingly, patentee has **one month or thirty (30) days**, whichever is longer, to file a request for reconsideration of this patent term adjustment calculation. See 35 U.S.C. 154(b)(3)(B)(ii) and 37 CFR 1.322(a)(4). No extensions of time will be granted under 37 CFR 1.136.

Patentee should use document code PET.OP if electronically filing a request for reconsideration of this patent term adjustment calculation. The patentee must also include the information required by 37 CFR 1.705(b)(2) and the fee required by 37 CFR 1.18(e). If patentee does not file a timely request for reconsideration of this patent term adjustment calculation including the information required by 37 CFR 1.705(b)(2) and the fee required by 37 CFR 1.18(e), the USPTO will issue a certificate of correction reflecting the PTA determination noted above.

Patentee should be aware that in order to preserve the right to review in the United States District Court for the District of Columbia of the USPTO patent term adjustment determination, patentee must ensure that he or she also take the steps required under 35 U.S.C. 154(b)(4)(A) in a timely manner. Nothing in the request for recalculation should be construed as providing an alternative time frame for commencing a civil action under 35 U.S.C. 154(b)(4)(A).

Any questions concerning this decision should be directed to the Office of Patent Legal Administration at 571-272-7702.

UNITED STATES PATENT AND TRADEMARK OFFICE

UNITED STATES DEPARTMENT OF COMMERCE
United States Patent and Trademark Office
Address: COMMISSIONER FOR PATENTS
P.O. Box 1450
Alexandria, Virginia 22313-1450
www.uspto.gov

HAMILTON & TERRILE, LLP
P.O. BOX 203518
AUSTIN, TX 78720

Mail Date: 04/20/2010

Applicant	: Andrew T. Sultenfuss	: DECISION ON REQUEST FOR
Patent Number	: 7596687	: RECALCULATION of PATENT
Issue Date	: 09/29/2009	: TERM ADJUSTMENT IN VIEW
Appliction No	: 11/145,599	: OF WYETH AND NOTICE OF INTENT TO
Filed	: 06/06/2005	: ISSUE CERTIFICATE OF CORRECTION
		:

The Request for Recalculation is **GRANTED** to the extent indicated.

The patent term adjustment has been determined to be **730** days. The USPTO will *sua sponte* issue a certificate of correction reflecting the amount of PTA days determined by the recalculation.

Prior to the issuance of the certificate of correction, the USPTO will afford patentee an opportunity to be heard and request reconsideration. Accordingly, patentee has **one month or thirty (30) days**, whichever is longer, to file a request for reconsideration of this patent term adjustment calculation. See 35 U.S.C. 154(b)(3)(B)(ii) and 37 CFR 1.322(a)(4). No extensions of time will be granted under 37 CFR 1.136.

Patentee should use document code PET.OP if electronically filing a request for reconsideration of this patent term adjustment calculation. The patentee must also include the information required by 37 CFR 1.705(b)(2) and the fee required by 37 CFR 1.18(e). If patentee does not file a timely request for reconsideration of this patent term adjustment calculation including the information required by 37 CFR 1.705(b)(2) and the fee required by 37 CFR 1.18(e), the USPTO will issue a certificate of correction reflecting the PTA determination noted above.

Patentee should be aware that in order to preserve the right to review in the United States District Court for the District of Columbia of the USPTO patent term adjustment determination, patentee must ensure that he or she also take the steps required under 35 U.S.C. 154(b)(4)(A) in a timely manner. Nothing in the request for recalculation should be construed as providing an alternative time frame for commencing a civil action under 35 U.S.C. 154(b)(4)(A).

Any questions concerning this decision should be directed to the Office of Patent Legal Administration at 571-272-7702.

UNITED STATES PATENT AND TRADEMARK OFFICE

UNITED STATES DEPARTMENT OF COMMERCE
United States Patent and Trademark Office
Address: COMMISSIONER FOR PATENTS
P.O. Box 1450
Alexandria, Virginia 22313-1450
www.uspto.gov

Squire, Sanders & Dempsey L.L.P.
Oracle International Corporation
8000 Towers Crescent Drive
14th Floor
Vienna, VA 22182

Mail Date: 04/20/2010

Applicant	: Gary Horen	: DECISION ON REQUEST FOR
Patent Number	: 7610545	: RECALCULATION of PATENT
Issue Date	: 10/27/2009	: TERM ADJUSTMENT IN VIEW
Appliction No	: 11/145,605	: OF WYETH AND NOTICE OF INTENT TO
Filed	: 06/06/2005	: ISSUE CERTIFICATE OF CORRECTION
		:

The Request for Recalculation is **GRANTED** to the extent indicated.

The patent term adjustment has been determined to be **532** days. The USPTO will *sua sponte* issue a certificate of correction reflecting the amount of PTA days determined by the recalculation.

Prior to the issuance of the certificate of correction, the USPTO will afford patentee an opportunity to be heard and request reconsideration. Accordingly, patentee has **one month or thirty (30) days**, whichever is longer, to file a request for reconsideration of this patent term adjustment calculation. See 35 U.S.C. 154(b)(3)(B)(ii) and 37 CFR 1.322(a)(4). No extensions of time will be granted under 37 CFR 1.136.

Patentee should use document code PET.OP if electronically filing a request for reconsideration of this patent term adjustment calculation. The patentee must also include the information required by 37 CFR 1.705(b)(2) and the fee required by 37 CFR 1.18(e). If patentee does not file a timely request for reconsideration of this patent term adjustment calculation including the information required by 37 CFR 1.705(b)(2) and the fee required by 37 CFR 1.18(e), the USPTO will issue a certificate of correction reflecting the PTA determination noted above.

Patentee should be aware that in order to preserve the right to review in the United States District Court for the District of Columbia of the USPTO patent term adjustment determination, patentee must ensure that he or she also take the steps required under 35 U.S.C. 154(b)(4)(A) in a timely manner. Nothing in the request for recalculation should be construed as providing an alternative time frame for commencing a civil action under 35 U.S.C. 154(b)(4)(A).

Any questions concerning this decision should be directed to the Office of Patent Legal Administration at 571-272-7702.

UNITED STATES PATENT AND TRADEMARK OFFICE

UNITED STATES DEPARTMENT OF COMMERCE
United States Patent and Trademark Office
Address: COMMISSIONER FOR PATENTS
P.O. Box 1450
Alexandria, Virginia 22313-1450
www.uspto.gov

DOCKET CLERK
P.O. DRAWER 800889
DALLAS, TX 75380

Mail Date: 04/20/2010

Applicant	: Yinong Ding	: DECISION ON REQUEST FOR
Patent Number	: 7596352	: RECALCULATION of PATENT
Issue Date	: 09/29/2009	: TERM ADJUSTMENT IN VIEW
Appliction No	: 11/145,619	: OF WYETH AND NOTICE OF INTENT TO
Filed	: 06/06/2005	: ISSUE CERTIFICATE OF CORRECTION
		:

The Request for Recalculation is **GRANTED** to the extent indicated.

The patent term adjustment has been determined to be **1150** days. The USPTO will *sua sponte* issue a certificate of correction reflecting the amount of PTA days determined by the recalculation.

Prior to the issuance of the certificate of correction, the USPTO will afford patentee an opportunity to be heard and request reconsideration. Accordingly, patentee has **one month or thirty (30) days**, whichever is longer, to file a request for reconsideration of this patent term adjustment calculation. See 35 U.S.C. 154(b)(3)(B)(ii) and 37 CFR 1.322(a)(4). No extensions of time will be granted under 37 CFR 1.136.

Patentee should use document code PET.OP if electronically filing a request for reconsideration of this patent term adjustment calculation. The patentee must also include the information required by 37 CFR 1.705(b)(2) and the fee required by 37 CFR 1.18(e). If patentee does not file a timely request for reconsideration of this patent term adjustment calculation including the information required by 37 CFR 1.705(b)(2) and the fee required by 37 CFR 1.18(e), the USPTO will issue a certificate of correction reflecting the PTA determination noted above.

Patentee should be aware that in order to preserve the right to review in the United States District Court for the District of Columbia of the USPTO patent term adjustment determination, patentee must ensure that he or she also take the steps required under 35 U.S.C. 154(b)(4)(A) in a timely manner. Nothing in the request for recalculation should be construed as providing an alternative time frame for commencing a civil action under 35 U.S.C. 154(b)(4)(A).

Any questions concerning this decision should be directed to the Office of Patent Legal Administration at 571-272-7702.

UNITED STATES PATENT AND TRADEMARK OFFICE

UNITED STATES DEPARTMENT OF COMMERCE
United States Patent and Trademark Office
Address: COMMISSIONER FOR PATENTS
P.O. Box 1450
Alexandria, Virginia 22313-1450
www.uspto.gov

HAMILTON & TERRILE, LLP
P.O. BOX 203518
AUSTIN, TX 78720

Mail Date: 04/20/2010

Applicant	: Andrew T. Sultenfuss	: DECISION ON REQUEST FOR
Patent Number	: 7602371	: RECALCULATION of PATENT
Issue Date	: 10/13/2009	: TERM ADJUSTMENT IN VIEW
Appliction No	: 11/145,638	: OF WYETH AND NOTICE OF INTENT TO
Filed	: 06/06/2005	: ISSUE CERTIFICATE OF CORRECTION
		:

The Request for Recalculation is **GRANTED** to the extent indicated.

The patent term adjustment has been determined to be **922** days. The USPTO will *sua sponte* issue a certificate of correction reflecting the amount of PTA days determined by the recalculation.

Prior to the issuance of the certificate of correction, the USPTO will afford patentee an opportunity to be heard and request reconsideration. Accordingly, patentee has **one month or thirty (30) days**, whichever is longer, to file a request for reconsideration of this patent term adjustment calculation. See 35 U.S.C. 154(b)(3)(B)(ii) and 37 CFR 1.322(a)(4). No extensions of time will be granted under 37 CFR 1.136.

Patentee should use document code PET.OP if electronically filing a request for reconsideration of this patent term adjustment calculation. The patentee must also include the information required by 37 CFR 1.705(b)(2) and the fee required by 37 CFR 1.18(e). If patentee does not file a timely request for reconsideration of this patent term adjustment calculation including the information required by 37 CFR 1.705(b)(2) and the fee required by 37 CFR 1.18(e), the USPTO will issue a certificate of correction reflecting the PTA determination noted above.

Patentee should be aware that in order to preserve the right to review in the United States District Court for the District of Columbia of the USPTO patent term adjustment determination, patentee must ensure that he or she also take the steps required under 35 U.S.C. 154(b)(4)(A) in a timely manner. Nothing in the request for recalculation should be construed as providing an alternative time frame for commencing a civil action under 35 U.S.C. 154(b)(4)(A).

Any questions concerning this decision should be directed to the Office of Patent Legal Administration at 571-272-7702.

UNITED STATES PATENT AND TRADEMARK OFFICE

COMMISSIONER FOR PATENTS
UNITED STATES PATENT AND TRADEMARK OFFICE
P.O. BOX 1450
ALEXANDRIA, VA 22313-1450
www.uspto.gov

Paper No.

THE PROCTER & GAMBLE COMPANY
INTELLECTUAL PROPERTY DIVISION
WINTON HILL TECHNICAL CENTER - BOX 161
6110 CENTER HILL AVENUE
CINCINNATI, OH 45224

COPY MAILED

OCT 03 2005

OFFICE OF PETITIONS

In re Application of	:	
Douglas Zeik	:	
Application No. 11/145,649	:	DECISION ON
Filed: June 6, 2005	:	PETITION
Attorney Docket No. 9696	:	

This is a decision on the "PETITION PURSUANT TO CFR 1.53(e)," filed July 14, 2005, requesting that the above-identified application be granted a filing date of June 6, 2005 with three sheets of drawings present in the application.

Application papers in the above-identified application were deposited on June 6, 2005. However, on June 21, 2005, the Initial Patent Examination Division mailed applicant a "Notice of Incomplete Nonprovisional Application," stating that the application papers had not been accorded a filing date because the application was deposited without drawings.

In response, applicant timely filed the instant petition, asserting that the original application was filed with three sheets of drawings. Petitioner states that the presence of the drawings in the application as received by the Office was confirmed by two different Customer Service Representatives. Petitioner also acknowledges that the drawings were not specifically identified on the Return Postcard. Accompanying the petition were copies of the drawings as petitioner maintains they were deposited on June 6, 2005.

A nonprovisional application will be given a filing date in accordance with 35 U.S.C. 111(a)(4) and 37 CFR 1.53(c) as of the date the specification and any required drawings are filed in the Office.

The application file is the Official record of the application papers received in an application. Where the records of the Office (e.g., the file of the application) contain any document(s) or fee(s) corresponding to the contents of the correspondence at issue, the Office will rely upon its official record of the contents of such correspondence in absence of convincing evidence (e.g., a postcard receipt under MPEP § 503 containing specific itemization of the document(s) or fee(s) purported to have been filed with the correspondence at issue) that the Office received and misplaced any document(s) or fee(s) that is not among the official records of the Office. The application file has been reviewed and no drawings are among the papers received in this application on filing.

The petition does not include postcard evidence, or any other convincing evidence, that drawings were filed in this application and misplaced. Petitioner acknowledges that as to the drawings, the application was not filed utilizing the benefits of a properly itemized postcard. The statements of the customer service representatives do not overcome the evidence of record. The statements are not more persuasive than the Official record of the application as reviewed by the undersigned. Thus, it is concluded that petitioner has not shown that drawings should be considered a part of the original application disclosure.

It is noted that a review of the application reveals that as filed it included incorporation by reference of application No. 60/583,237. However, there is no indication on petition that the drawings filed in the provisional application are the same as the drawings omitted from the instant application. Moreover, petitioner does not assert entitlement to a filing date of June 6, 2005 with the drawings as a part of the original application disclosure based on the incorporation by reference. See MPEP 201.06(c) and new 37 CFR 1.57 at *Changes to Support Implementation of the United States Patent and Trademark Office 21st Century Strategic Plan; Final Rule*, 69 FR 56481 (September 21, 2004).

Receipt of the petition fee for consideration of the petition under § 1.53(e) to accord the application a filing date of June 6, 2005, with drawings present in the application is acknowledged.

The petition is **DISMISSED** to the extent that the application will not be accorded a filing date of June 6, 2005, with drawings present in the application.

Nonetheless, it has been USPTO practice to treat an application that contains at least one process or method claim as an application for which a drawing is not necessary for an understanding of the invention under 35 U.S.C. 113 (first sentence). A review of the application as filed revealed that it included at least one process claim.

Accordingly, the petition is **GRANTED** to the extent that the application will be accorded a filing date of June 6, 2005, with no drawings present in the application.

However, in regards to withdrawing the Notice, MPEP § 601.01(f) also states that:

> A nonprovisional application having at least some disclosure, directed to the subject matter discussed above for which a drawing is usually not considered essential for a filing date, describing drawing figure(s) in the specification, but filed without drawings will be treated as an application filed without all of the drawing figures referred to in the specification as discussed in MPEP § 601.01(g), so long as the application contains something that can be construed as a written description.

And, MPEP § 601.01(g) further provides that:

> If the application is filed without all of the drawing figure(s) referred to in the specification, ... OIPE will mail a "Notice of Omitted Item(s)" indicating that the application papers so deposited have been accorded a filing date, but are lacking some of the figures of the drawings described in the specification.

As the specification in the instant nonprovisional application contained references to drawing figures, mailing of a Notice

requiring submission of those drawings was appropriate. The Notice will not be withdrawn.

The Office of Initial Patent Examination (OIPE) has been advised of this decision. This application is, thereby, being forwarded to OIPE for **according of a filing date of June 6, 2005** and for **indication in Office records, as appropriate, that "0" sheets of drawings were present on filing**.

Applicant will receive appropriate notifications regarding any missing items or fees owed, and other information in due course from OIPE.

Telephone inquiries specific to this decision may be directed to the undersigned at (571) 272-3219.

Nancy Johnson
Senior Petitions Attorney
Office of Petitions

UNITED STATES PATENT AND TRADEMARK OFFICE

UNITED STATES DEPARTMENT OF COMMERCE
United States Patent and Trademark Office
Address: COMMISSIONER FOR PATENTS
P.O. Box 1450
Alexandria, Virginia 22313-1450
www.uspto.gov

BAKER & DANIELS LLP
111 E. WAYNE STREET
SUITE 800
FORT WAYNE, IN 46802

Mail Date: 04/21/2010

Applicant	: Dan M. Manole	: DECISION ON REQUEST FOR
Patent Number	: 7600390	: RECALCULATION of PATENT
Issue Date	: 10/13/2009	: TERM ADJUSTMENT IN VIEW
Appliction No	: 11/145,661	: OF WYETH AND NOTICE OF INTENT TO
Filed	: 06/06/2005	: ISSUE CERTIFICATE OF CORRECTION
		:

The Request for Recalculation is **GRANTED** to the extent indicated.

The patent term adjustment has been determined to be **764** days. The USPTO will *sua sponte* issue a certificate of correction reflecting the amount of PTA days determined by the recalculation.

Prior to the issuance of the certificate of correction, the USPTO will afford patentee an opportunity to be heard and request reconsideration. Accordingly, patentee has **one month or thirty (30) days**, whichever is longer, to file a request for reconsideration of this patent term adjustment calculation. See 35 U.S.C. 154(b)(3)(B)(ii) and 37 CFR 1.322(a)(4). No extensions of time will be granted under 37 CFR 1.136.

Patentee should use document code PET.OP if electronically filing a request for reconsideration of this patent term adjustment calculation. The patentee must also include the information required by 37 CFR 1.705(b)(2) and the fee required by 37 CFR 1.18(e). If patentee does not file a timely request for reconsideration of this patent term adjustment calculation including the information required by 37 CFR 1.705(b)(2) and the fee required by 37 CFR 1.18(e), the USPTO will issue a certificate of correction reflecting the PTA determination noted above.

Patentee should be aware that in order to preserve the right to review in the United States District Court for the District of Columbia of the USPTO patent term adjustment determination, patentee must ensure that he or she also take the steps required under 35 U.S.C. 154(b)(4)(A) in a timely manner. Nothing in the request for recalculation should be construed as providing an alternative time frame for commencing a civil action under 35 U.S.C. 154(b)(4)(A).

Any questions concerning this decision should be directed to the Office of Patent Legal Administration at 571-272-7702.

UNITED STATES PATENT AND TRADEMARK OFFICE

OFFICE OF DATA MANAGEMENT

PATENT LAW & VENTURE GROUP
2424 S.E. BRISTOL, SUITE 300
NEWPORT BEACH CA 92660

MAY 12 2009

In re Application of	:	
HALL, KENNITH C.	:	**DECISION ON PETITION**
Application No. 11/145,665	:	
Filed: June 6, 2005	:	
Attorney Docket No. HALL.K-00US	:	

This is a decision on the Petition To Withdraw Holding Of Abandonment received in the United States Patent and Trademark Office (USPTO) on January 15, 2009.

The petition is **GRANTED**.

The application was held abandoned for failure to timely pay the issue fee as required by the Notice of Allowance and Fee(s) Due, mailed September 9, 2008, which set forth a three (3) month statutory period for reply. Accordingly, the Notice of Abandonment was mailed on January 7, 2009.

Petitioner states that the Applicants responded by timely paying the Issue Fee on December 9, 2008. In support of this assertion the petitioner has submitted documents, which include the following:

- Copy of Form PTOL-85B (FEE(S) TRANSMITTAL) signed by Gene Scott
- A verified statement signed by Gene Scott on January 15, 2009, which declares the prepared and mailed on December 9, 2008

The petitioner has demonstrated that the Fee Transmittal was timely mailed on December 9, 2008, and is in compliance with 37 CFR 1.10 in that

(1) the Patent and Trademark Office was promptly informed of the previous timely mailing,

(2) included a statement which attests to the previous timely mailing.

In view of the foregoing, the holding of abandonment for failure to timely pay the issue fee is hereby withdrawn and the application restored to pending status.

Telephone inquires concerning this decision be directed to the undersigned in the Office of Patent Publication at 703-756-1547.

Kay D. Pinkney
Application Assistance Unit
Office of Data Management

UNITED STATES PATENT AND TRADEMARK OFFICE

Commissioner for Patents
United States Patent and Trademark Office
P.O. Box 1450
Alexandria, VA 22313-1450
www.uspto.gov

DEC 19 2005

RUDEN, MCCLOSKY, SMITH, SCHUSTER & RUSSELL, P.A.
222 LAKEVIEW AVE
SUITE 800
WEST PALM BEACH FL 33401-6112

In re Application of Mitchell S. Karl Serial No.: 11/145,666 Filed: June 6, 2005 Attorney Docket No.: 43069-0005	: PETITION TO MAKE SPECIAL

This is in response to the petition filed June 6, 2005, to make the above-identified application special under the provisions of 37 CFR 1.102(d).

Applicant has satisfied the provisions set forth in M.P.E.P. 708.02, X. Therefor the petition is **GRANTED**.

The application will be forwarded to the examiner for action on the merits commensurate with this decision.

Should there be any questions with regard to this letter please contact William R. Dixon, Jr. by letter addressed to the Director, Technology Center 1600, P.O. Box 1450, Alexandria, VA 22313-1450, or by telephone at 571-272-0519 or by facsimile transmission to the Office general facsimile number, 571-273-8300.

William R. Dixon, Jr.
Special Program Examiner
Technology Center 1600

UNITED STATES PATENT AND TRADEMARK OFFICE

Commissioner for Patents
United States Patent and Trademark Office
P.O. Box 1450
Alexandria, VA 22313-1450
www.uspto.gov

APR 4 2006

FISH & RICHARDSON P.C.
PO BOX 1022
MINNEAPOLIS MN 55440-1022

In re Application of	:
Kent Cochrum et al	:
Serial No.: 11/145,678	: PETITION TO MAKE SPECIAL
Filed: June 6, 2005	:
Attorney Docket No.: 14004-017002	:

This is in response to the petition filed March 21, 2006, to make the above-identified application special under the provisions of 37 CFR 1.102(c), based on the age of the applicant.

Applicant has satisfied the provisions set forth in M.P.E.P. 708.02, IV. Therefor the petition is **GRANTED**.

The application will be forwarded to the examiner for action on the merits commensurate with this decision.

Should there be any questions with regard to this letter please contact William R. Dixon, Jr. by letter addressed to the Director, Technology Center 1600, PO BOX 1450, ALEXANDRIA, VA 22313-1450, or by telephone at 571-272-0519 or by facsimile transmission to the general Office facsimile number, 571-273-8300.

William R. Dixon, Jr.
Special Program Examiner
Technology Center 1600

UNITED STATES PATENT AND TRADEMARK OFFICE

Commissioner for Patents
United States Patent and Trademark Office
P.O. Box 1450
Alexandria, VA 22313-1450
www.uspto.gov

LEIGHTON K. CHONG
PATENT ATTORNEY
133 KAAI STREET
HONOLULU HI 96821

COPY MAILED

SEP 29 2008

OFFICE OF PETITIONS

In re Application of	:	
Han, Sil	:	
Application No. 11/145,681	:	ON PETITION
Filed: June 3, 2005	:	
Attorney Docket No. HPC-P5	:	

This is a decision on the petition under 37 C.F.R. § 1.137(b), filed September 8, 2008, to revive the above-identified application.

The petition is **DISMISSED**.

Any request for reconsideration must be submitted within TWO (2) MONTHS from the mail date of this decision. No further petition fee is required for the request. Extensions of time under 37 CFR 1.136(a) are permitted. The reconsideration request should include a cover letter entitled "Renewed Petition under 37 CFR 1.137(b)." This is **not** a final agency action within the meaning of 5 U.S.C. § 704.

A grantable petition under 37 CFR 1.137(b) must be accompanied by:
(1) the required reply,[1]
(2) the petition fee,
(3) a statement that the entire delay in filing the required reply from the due date for the reply until the filing of a grantable petition pursuant to 37 CFR 1.137(b) was unintentional, and
(4) a terminal disclaimer and fee if the application was filed on or before June 8, 1995 or if the application is a design application.

Where there is a question as to whether either the abandonment or the delay in filing a petition under 37 CFR 1.137 was unintentional, the Commissioner may require additional information.[2]

The instant petition lacks item(s) (1). The Office acknowledges receipt of the Issue Fee Transmittal with payment of the issue and publication fees. However, the Notice of Allowability, mailed April 12, 2007, also required a Substitute Oath/Declaration.

Further correspondence with respect to this matter should be addressed as follows:

---

[1] In a nonprovisional application abandoned for failure to prosecute, the required reply may be met by the filing of a continuing application. In an application or patent, abandoned or lapsed for failure to pay the issue fee or any portion thereof, the required reply must be the payment of the issue fee or any outstanding balance thereof.

[2] See MPEP 711.03(c)(III)(C) and (D).

By mail: Mail Stop PETITIONS
Commissioner for Patents
Post Office Box 1450
Alexandria, VA 22313-1450

By hand: Customer Window located at:

U.S. Patent and Trademark Office
Customer Service Window Randolph Building
401 Dulany Street
Alexandria, VA 22314

By fax: (571) 273-8300
ATTN: Office of Petitions

Any questions concerning this matter may be directed to the undersigned at (571) 272-3206.

Liana Walsh
Petitions Examiner
Office of Petitions

UNITED STATES PATENT AND TRADEMARK OFFICE

Commissioner for Patents
United States Patent and Trademark Office
P.O. Box 1450
Alexandria, VA 22313-1450
www.uspto.gov

LEIGHTON K. CHONG
PATENT ATTORNEY
133 KAAI STREET
HONOLULU HI 96821

COPY MAILED

MAR 1 2 2009

OFFICE OF PETITIONS

In re Application of :
Han, Sil :
Application No. 11/145,681 : ON PETITION
Filed: June 3, 2005 :
Attorney Docket No. HPC-P5 :

This is a decision on the renewed petition under 37 C.F.R. § 1.137(b), filed October 27, 2008, to revive the above-identified application.

The petition is **GRANTED**.

The petition now satisfies the requirements of 37 CFR 1.137(b) in that petitioner has supplied a Substitute Oath/Declaration.

Petitioner has also submitted an Amendment after Allowance, which amends the specification to include a priority claim to Provisional Application No. 60/580,742, filed June 17, 2004. The reference required by 37 CFR 1.78(a)(5) must be included in an ADS or the specification must contain or be amended to contain such reference in the first sentence(s) following the title. If an applicant includes a benefit claim in the application but not in the manner specified by 37 CFR 1.78(a)(e.g., if the claim is included in an oath or declaration or the application transmittal letter) within the time period set forth in 37 CFR 1.78(a), the Office will not require a petition under 37 CFR 1.78(a) and the surcharge under 37 CFR 1.17(t) to correct the claim if the information concerning the claim was recognized by the Office as shown by its inclusion on the filing receipt. If, however, a claim is not included in the first sentence(s) of the specification or in an ADS and is not recognized by the Office as shown by its absence on the filing receipt, the Office will require a petition under 37 CFR 1.78(a)(6) and the surcharge to correct the claim.

Since the instant application is close to issuing into a patent, petitioner is advised that under no circumstances can a Certificate of Correction be employed to correct an applicant's mistake by adding or correcting a priority claim under 35 U.S.C. 119(e) for an application filed on or after November 29, 2000.

Section 4503 of the American Inventors Protection Act of 1999 (AIPA) amended 35 U.S.C. 119(e)(1) to state that:

> No application shall be entitled to the benefit of an earlier filed provisional application under this subsection unless an amendment containing the specific reference to the earlier filed provisional application is submitted at such time during the pendency of the application as required by the Director. The Director may consider the failure to submit such an amendment within that time period as a waiver of any benefit under this subsection. The Director may establish procedures, including the payment of a surcharge, to accept an unintentionally delayed submission of an amendment under this section ***during the pendency of the application***. (emphasis added)

A Certificate of Correction is NOT a valid mechanism for adding or correcting a priority claim under 35 U.S.C. 119(e) after a patent has been granted on an application filed on or after November 29, 2000

Telephone inquiries concerning this decision should be directed to the undersigned at (571) 272-3206.

This matter is being referred to the Office of Data Management for processing into a patent.

Liana Walsh
Petitions Examiner
Office of Petitions

UNITED STATES PATENT AND TRADEMARK OFFICE

Commissioner for Patents
United States Patent and Trademark Office
P.O. Box 1450
Alexandria, VA 22313-1450
www.uspto.gov

MAILED FROM
DIRECTORS OFFICE

OCT 2 2006

TECHNOLOGY CENTER 2800

September 2006

Christopher E. Chalsen
Milbank, Tweed, Hadley & McCloy LLP
1 Chase Manhattan Plaza
New York NY 10005-1413

In re Application of:	:	
YUUICHI KIJIMA ET AL.	:	DECISION ON PETITION TO
Serial No.: 11/145,721	:	MAKE SPECIAL UNDER 37
Filed: 06 June 2005	:	C.F.R. § 1.102(d)
Title: Display Device	:	

This is a decision on the petition filed on August 24, 2005, to make the above-identified application special under the accelerated examination procedure set forth in MPEP § 708.02(VIII) in accordance with 37 C.F.R. § 1.102(d).

The petition to make the application special is **DISMISSED**.

In support of the petition, petition provides: a) the applicable petition fee; b) a statement that the claims are directed to a single invention and an offer to elect without traverse should a restriction or election of species requirement is made; c) a statement that a pre-examination search was made, including the search areas; d) copies of the references stated as being most closely related to the claimed subject matter; and e) a discussion of the teaching of the references.

For accelerated examination under MPEP § 708.02(VIII) in accordance with 37 C.F.R. § 1.102(d), a showing of the following is required: a) a petition to make special accompanied by the applicable petition fee; b) all claims are directed to a single invention; c) a statement that a pre-examination search was made, including the search areas; d) a copy of each of the references deemed most closely related to the claimed subject matter; and e) a detailed discussion of the references pointing out with the particularity required by 37 CFR 1.111 (b) and (c), how the claimed subject matter is distinguishable over the references.

The requirements of MPEP § 708.02(VIII)(a), (b), (c) and (d) are considered to have been met. However, petitioner fails to point out with the particularity required by 37 CFR § 1.111 (b) and (c), how the claimed subject matter is distinguishable over the *each* of the references. Therefore, petitioner fails to meet the requirement of MPEP § 708.02(VIII)(e).

37 CFR § 1.111 (b) states"[a] general allegation that the claims define a patentable invention without specifically pointing out how the language of the claims patentably distinguishes them from the references does not comply with the requirements of this section." 37 CFR § 1.111 (c) states in part "the applicant or patent owner must clearly point out the patentable novelty which he or she thinks the claims present in view of the state of the art disclosed by the references cited or the objections made."

Petitioner presents a brief discussion of the cited references, and states that they do not teach the specific limitations claimed in the independent claims. However, a *detailed discussion* of how each of the references overcomes each of the independent claims is required for the petition to be granted. For instance, petitioner has not discussed exactly how the Ito, Tsuda and Kawase et al references lack a disclosure or fair teaching of the limitations of each independent claim. A mere statement alleging that the claims contain a feature not found in the relevant prior art is insufficient. Petitioner is required to provide such detailed discussion for each reference with respect to each independent claim.

While Technology Center Directors may have granted petitions that do not comply with the detailed discussion requirement of the Accelerated Examination procedure, Technology Center Director decisions on petitions are not binding precedent of the Patent Examining Corps, and the application of an improper standard in certain cases does not require the Office to continue to apply the improper standard in all cases. *See In re The Boulevard Entertainment, Inc.*, 334 F.3d 1336, 1343, 67 USPQ2d 1475, 1480 (Fed. Cir. 2003)).

For the above-mentioned reasons, the petition is dismissed. The application will therefore be taken up by the examiner for action in its regular turn.

Any request for reconsideration of this decision must be submitted within 2 (two) months of the date of this decision in order to be considered timely. Any resubmission of the petition must provide a detailed discussion of how each of the independent claims is not met by each of the references presented as relevant, and a statement complying with MPEP § 708.02(VIII)(b).

Any inquiry regarding this decision should be directed to Jose' G. Dees, Special Program Examiner, at (571) 272-1569.

Jose' G. Dees, Special Program Examiner
Technology Center 2800 - Semiconductors,
Electrical & Optical Systems & Components

UNITED STATES PATENT AND TRADEMARK OFFICE

Commissioner for Patents
United States Patent and Trademark Office
P.O. Box 1450
Alexandria, VA 22313-1450
www.uspto.gov

LAUBSCHER & LAUBSCHER, PC
1160 SPA ROAD
SUITE 2B
ANNAPOLIS, MD 21403

MAILED

JAN 30 2009

OFFICE OF PETITIONS

In re Application of	:	
Ignacio Cisneros	:	
Application No. 11/145,726	:	DECISION ON PETITION
Filed: June 6, 2005	:	TO WITHDRAW
Attorney Docket No. 19535	:	FROM RECORD
	:	

This is a decision on the Request to Withdraw as attorney or agent of record under 37 C.F.R. § 1.36(b), filed December 1, 2008.

The request is **DISMISSED** as moot.

A review of the file record indicates that the power of attorney to Laubscher & Laubscher, PC has been revoked by the applicant of the patent application on December 23, 2008. Accordingly, the request to withdraw under 37 C.F.R. § 1.36(b) is moot.

All future communications from the Office will continue to be directed to the below-listed address until otherwise notified by applicant.

Telephone inquires concerning this decision should be directed to undersigned at 571-272-1642.

/AMW/
April M. Wise
Petitions Examiner
Office of Petitions

cc: BROWDY & NEIMARK, PLLC
624 NINTH STREET, NW
SUITE 300
WASHINGTON, DC 20001-5303

SPE RESPONSE FOR CERTIFICATE OF CORRECTION

Paper No.: _____

DATE : 8-2-07

TO SPE OF : ART UNIT 3662

SUBJECT : Request for Certificate of Correction for Appl. No. 7132981 B1 C 11/145767

Please respond to this request for a certificate of correction within 7 days.

Please review the requested changes/corrections as shown in the **COCIN** document(s) in the IFW application image. No new matter should be introduced, nor should the scope or meaning of the claims be changed.

Please complete the response (see below) and forward the completed response to scanning using document code **COCX**.

Please Response A/S/A/P. Attorney Wants to Know the Status

E M James
Certificates of Correction Branch
703-308-9390 ext. 116

Thank You For Your Assistance

The request for issuing the above-identified correction(s) is hereby:
Note your decision on the appropriate box.

- ☑ **Approved** — **All** changes apply.
- ☐ **Approved in Part** — Specify below which changes **do not** apply.
- ☐ **Denied** — State the reasons for denial below.

Comments: _____

Thomas A. Barrow
SPE

3662
Art Unit

UNITED STATES PATENT AND TRADEMARK OFFICE

Commissioner for Patents
United States Patent and Trademark Office
P.O. Box 1450
Alexandria, VA 22313-1450
www.uspto.gov

STEPHEN E. FELDMAN, P.C.
12 EAST 41ST STREET
NEW YORK NY 10017

COPY MAILED

AUG 1 8 2008

OFFICE OF PETITIONS

In re Application of
Ricky YEUNG
Application No. 11/145,774
Filed: June 06, 2005
Attorney Docket No.

DECISION ON PETITION

This is a decision on the petition under the unintentional provisions of 37 CFR 1.137(b), filed May 02, 2008, to revive the above-identified application.

The petition is **GRANTED**.

The application became abandoned for failure to reply in a timely manner to the non-final Office action mailed, October 03, 2007, which set a shortened statutory period for reply of three (3) month. No extensions of time under the provisions of 37 CFR 1.136(a) were obtained. Accordingly, the application became abandoned on January 04, 2008.

The petition satisfies the requirements of 37 CFR 1.137(b) in that petitioner has supplied (1) the reply in the form of an amendment; (2) the petition fee of $770.00; and (3) a proper statement of unintentional delay. Accordingly, the reply to the non-final Office action of October 03, 2007 is accepted as having been unintentionally delayed.

It is not apparent whether the person signing the statement of unintentional delay was in a position to have firsthand or direct knowledge of the facts and circumstances of the delay at issue. Nevertheless, such statement is being treated as having been made as the result of a reasonable inquiry into the facts and circumstances of such delay. See 37 CFR 10.18(b) and Changes to Patent Practice and Procedure; Final Rule Notice, 62 Fed. Reg. 53131, 53178 (October 10, 1997), 1203 Off. Gaz. Pat. Office 63, 103 (October 21, 1997). In the event that such an inquiry has not been made, petitioner must make such an inquiry. If such inquiry results in the discovery that it is not correct that the entire delay in filing the required reply from the due date for the reply until the filing of a grantable petition pursuant to 37 CFR 1.137(b) was unintentional, petitioner must notify the Office.

Telephone inquiries concerning this decision should be directed to the Michelle R. Eason at (571) 272- 4231.

The application file is being referred to Technology Center AU 1796 for appropriate action on the concurrently filed amendment.

Michelle R. Eason
Paralegal Specialist
Office of Petitions

UNITED STATES PATENT AND TRADEMARK OFFICE

Commissioner for Patents
United States Patent and Trademark Office
P.O. Box 1450
Alexandria, VA 22313-1450
www.uspto.gov

ERIC HANSCOM
7395 PORTAGE WAY
CARLSBAD, CA 92011

COPY MAILED

NOV 13 2008

OFFICE OF PETITIONS

In re Application of	:	
Carolyn Phelen	:	
Application No. 11/145,777	:	ON PETITION
Filed: June 6, 2005	:	
Attorney Docket No. Carolyn Phelen,	:	
Glove	:	

This is a decision on the petition under 37 CFR 1.137(b), filed on August 12, 2008, to revive the above-identified application.

The above application became abandoned for failure to file a proper reply to the final Office action mailed January 25, 2008. A Notice of Abandonment was mailed on August 12, 2008.

The petition satisfies the requirements of 37 CFR 1.137(b) in that petitioner has supplied (1) the reply in the form of a Request for Continued Examination (RCE) under 37 CFR 1.114 with the $405 filing fee; (2) the petition fee of $770; and (3) a proper statement of unintentional delay. Therefore, the petition is **GRANTED**.

This application is being revived for consideration of the RCE filed on August 12, 2008.

The application file is being referred to Technology Center Art Unit 3772 for further processing in the normal course of business.

Telephone inquiries concerning this decision should be directed to the undersigned at (571) 272-3226.

Andrea Smith
Petitions Examiner
Office of Petitions

UNITED STATES PATENT AND TRADEMARK OFFICE

Commissioner for Patents
United States Patent and Trademark Office
P.O. Box 1450
Alexandria, VA 22313-1450
www.uspto.gov

LERNER GREENBERG
STEMER LLP
P.O. BOX 2480
HOLLYWOOD, FL 33022-2480

COPY MAILED

APR 0 3 2008

OFFICE OF PETITIONS

In re Application of	:	
Yosef LABOCK	:	
Application No. 11/145,778	:	DECISION ON PETITION
Filed: June 6, 2005	:	TO WITHDRAW
Attorney Docket No. Labock-008	:	FROM RECORD
	:	

This is a decision on the Request to Withdraw as attorney or agent of record under 37 C.F.R. § 1.36(b), filed February 26, 2008.

The request is **APPROVED**.

A grantable request to withdraw as attorney/agent of record must be signed by every attorney/agent seeking to withdraw or contain a clear indication that one attorney is signing on behalf of another/others. A request to withdraw will not be approved unless at least 30 (thirty) days would remain between the date of approval and the later of the expiration date of a time to file a response or the expiration date of the maximum time period which can be extended under 37 C.F.R. § 1.136(a).

The request was signed by Laurence A. Greenberg on behalf of all attorneys/agents of record associated with Customer No. 24131.

All attorneys/agents associated of record associated with Customer No. 24131 have been withdrawn.

Applicant is reminded that there is no attorney of record at this time.

The request to change the correspondence of record is not acceptable as the requested correspondence address is not that of: (1) the first named signing inventor; or (2) an intervening assignee of the entire interest under 37 C.F.R 3.71. All future communications from the Office will be directed to the first named signing inventor at the first copied address below until otherwise properly notified by the applicant.

Telephone inquiries concerning this decision should be directed to the undersigned at 571-272-6735.

There are no outstanding Office actions pending at the present time.

Diane Goodwyn
Petitions Examiner
Office of Petitions

cc: YOSEF LABOCK
200 LESLIE DRIVE, APT. 508
HALLANDALE, FL 33009

cc: LABOCK TECHNOGIES, INC.
P.O. BOX 2680027
WESTON, FL 33326-8027

UNITED STATES PATENT AND TRADEMARK OFFICE

UNITED STATES DEPARTMENT OF COMMERCE
United States Patent and Trademark Office
Address: COMMISSIONER FOR PATENTS
P.O. Box 1450
Alexandria, Virginia 22313-1450
www.uspto.gov

APPLICATION NUMBER	FILING OR 371(C) DATE	FIRST NAMED APPLICANT	ATTY. DOCKET NO./TITLE
11/145,778	06/06/2005	Yosef Labock	Labock-008

CONFIRMATION NO. 4011

POWER OF ATTORNEY NOTICE

24131
LERNER GREENBERG STEMER LLP
P O BOX 2480
HOLLYWOOD, FL 33022-2480

OC000000029222171

Date Mailed: 04/02/2008

NOTICE REGARDING CHANGE OF POWER OF ATTORNEY

This is in response to the Power of Attorney filed 02/26/2008.

- The withdrawal as attorney in this application has been accepted. Future correspondence will be mailed to the new address of record. 37 CFR 1.33.

/dcgoodwyn/

Office of Initial Patent Examination (571) 272-4000 or 1-800-PTO-9199

UNITED STATES PATENT AND TRADEMARK OFFICE

UNITED STATES DEPARTMENT OF COMMERCE
United States Patent and Trademark Office
Address: COMMISSIONER FOR PATENTS
P.O. Box 1450
Alexandria, Virginia 22313-1450
www.uspto.gov

BORGWARNER INC.
c/o Brown & Michaels, PC
400 M&T Bank Building
118 N. Tioga Street
Ithaca, NY 14850

Mail Date: 04/20/2010

Applicant	: George L. Markley	: DECISION ON REQUEST FOR
Patent Number	: 7632200	: RECALCULATION of PATENT
Issue Date	: 12/15/2009	: TERM ADJUSTMENT IN VIEW
Appliction No	: 11/145,789	: OF WYETH AND NOTICE OF INTENT TO
Filed	: 06/06/2005	: ISSUE CERTIFICATE OF CORRECTION
		:

The Request for Recalculation is **GRANTED** to the extent indicated.

The patent term adjustment has been determined to be **1085** days. The USPTO will *sua sponte* issue a certificate of correction reflecting the amount of PTA days determined by the recalculation.

Prior to the issuance of the certificate of correction, the USPTO will afford patentee an opportunity to be heard and request reconsideration. Accordingly, patentee has **one month or thirty (30) days**, whichever is longer, to file a request for reconsideration of this patent term adjustment calculation. See 35 U.S.C. 154(b)(3)(B)(ii) and 37 CFR 1.322(a)(4). No extensions of time will be granted under 37 CFR 1.136.

Patentee should use document code PET.OP if electronically filing a request for reconsideration of this patent term adjustment calculation. The patentee must also include the information required by 37 CFR 1.705(b)(2) and the fee required by 37 CFR 1.18(e). If patentee does not file a timely request for reconsideration of this patent term adjustment calculation including the information required by 37 CFR 1.705(b)(2) and the fee required by 37 CFR 1.18(e), the USPTO will issue a certificate of correction reflecting the PTA determination noted above.

Patentee should be aware that in order to preserve the right to review in the United States District Court for the District of Columbia of the USPTO patent term adjustment determination, patentee must ensure that he or she also take the steps required under 35 U.S.C. 154(b)(4)(A) in a timely manner. Nothing in the request for recalculation should be construed as providing an alternative time frame for commencing a civil action under 35 U.S.C. 154(b)(4)(A).

Any questions concerning this decision should be directed to the Office of Patent Legal Administration at 571-272-7702.

UNITED STATES PATENT AND TRADEMARK OFFICE

Commissioner for Patents
United States Patent and Trademark Office
P.O. Box 1450
Alexandria, VA 22313-1450
www.uspto.gov

JOHN S. PRATT, ESQ
KILPATRICK STOCKTON, LLP
1100 PEACHTREE STREET
ATLANTA GA 30309

COPY MAILED

JUN 29 2007

OFFICE OF PETITIONS

In re Application of	:	
John A. Meekins	:	
Application No. 11/145790	:	
Filing or 371(c) Date: 06/06/2005	:	
Attorney Docket Number:	:	
50205/315144	:	ON PETITION

This is a decision on the Petition Under 37 CFR 1.181(a) to Withdraw Holding of Abandonment, filed May 1, 2007.

This Petition is hereby **granted**.

The above-identified application became abandoned for failure to timely and properly reply to the Office Communication, mailed September 14, 2006. The Office communication set a one (1) month period for reply, and provided for extensions of time under 37 CFR 1.136(a). No response having been received, the application became abandoned on October 15, 2006. A Notice of Abandonment was mailed April 10, 2007.

Applicant's Assertion

Applicant files the instant petition and asserts that a timely response to the Office communication was filed on October 12, 2006. In support of this assertion, Applicant files a copy of the four page response which includes a Certificate of Mailing under 37 CFR 1.8, executed by Gina Hamrick. Applicant also files a copy of an Auto-Reply Facsimile Transmission indicating that five pages were received in this Office from Applicant on October 12, 2006.

Applicable Law, Rules and MPEP

> 37 CFR § 1.8, Certificate of mailing or transmission, provides in relevant part:
> (a) Except in the situations enumerated in paragraph (a)(2) of this section or as otherwise expressly excluded in this chapter, correspondence required to be filed in the U.S. Patent and Trademark Office within a set period of time will be considered as being timely filed if the procedure described in this section is followed. The actual date of receipt will be used for all other purposes.
> (1) Correspondence will be considered as being timely filed if:
> (i) The correspondence is mailed or transmitted prior to expiration of the set

period of time by being:
(A) Addressed as set out in § 1.1(a) and deposited with the U.S. Postal Service with sufficient postage as first class mail; or
(B) Transmitted by facsimile to the Patent and Trademark Office in accordance with § 1.6(d); and
(ii) The correspondence includes a certificate for each piece of correspondence stating the date of deposit or transmission. The person signing the certificate should have reasonable basis to expect that the correspondence would be mailed or transmitted on or before the date indicated.

(b) In the event that correspondence is considered timely filed by being mailed or transmitted in accordance with paragraph (a) of this section, but not received in the U.S. Patent and Trademark Office after a reasonable amount of time has elapsed from the time of mailing or transmitting of the correspondence, or after the application is held to be abandoned, or after the proceeding is dismissed, terminated, or decided with prejudice, the correspondence will be considered timely if the party who forwarded such correspondence:
(1) Informs the Office of the previous mailing or transmission of the correspondence promptly after becoming aware that the Office has no evidence of receipt of the correspondence;
(2) Supplies an additional copy of the previously mailed or transmitted correspondence and certificate; and
(3) Includes a statement which attests on a personal knowledge basis or to the satisfaction of the Director to the previous timely mailing or transmission. If the correspondence was sent by facsimile transmission, a copy of the sending unit's report confirming transmission may be used to support this statement.
(c) The Office may require additional evidence to determine if the correspondence was timely filed.

Analysis

Petitioner herein has not provided a statement in accordance with 37 CFR 1.8(b)(3). As such, the petition may not be granted under 37 CFR 1.8.

Review of office records

A review of office records also reveals that the response to the Office communication was received by this Office on October 12, 2006.

Conclusion

In view of the foregoing, the petition is granted. The holding of abandonment is hereby withdrawn.

No fee has been charged and none is due.

The application will be referred to Technology Center Art Unit 3644 for processing of the response, and for further examination in the normal course of business.

Telephone inquiries concerning this matter should be directed to the undersigned at (571) 272-3232.

Derek L. Woods
Attorney
Office of Petitions

UNITED STATES PATENT AND TRADEMARK OFFICE

Commissioner for Patents
United States Patent and Trademark Office
P.O. Box 1450
Alexandria, VA 22313-1450
www.uspto.gov

JOHN S. PRATT, ESQ
KILPATRICK STOCKTON, LLP
1100 PEACHTREE STREET
ATLANTA GA 30309

COPY MAILED

JUL 0 3 2007

OFFICE OF PETITIONS

In re Application of	:	
Meekins, John A.	:	
Application No. 11/145,790	:	ON PETITION
Filed: June 6, 2005	:	
Attorney Docket No. 50205/315144	:	

This is a decision on the petition under 37 CFR 1.102(c)(1), filed May 25, 2007, to make the above-identified application special based on applicant's age as set forth in M.P.E.P. § 708.02, Section IV.

The petition is **GRANTED**.

A grantable petition to make an application special under 37 CFR 1.102(c)(1) and MPEP § 708.02, Section IV: Applicant's Age must be accompanied by evidence showing that at least one of the applicants is 65 years of age, or more, such as a birth certificate or a statement by applicant. No fee is required.

The instant petition includes a statement from the applicant, John A. Meekins. Accordingly, the above-identified application has been accorded "special" status.

Telephone inquiries concerning this decision should be directed to the undersigned at 571-272-3206. All other inquiries concerning either the examination or status of the application should be directed to the Technology Center.

This matter is being referred to the Technology Center Art Unit 3644 for action on the merits commensurate with this decision.

Liana Walsh
Petitions Examiner
Office of Petitions

UNITED STATES PATENT AND TRADEMARK OFFICE

UNITED STATES DEPARTMENT OF COMMERCE
United States Patent and Trademark Office
Address: COMMISSIONER FOR PATENTS
P.O. Box 1450
Alexandria, Virginia 22313-1450
www.uspto.gov

PCE INDUSTRY, INC.
ATT. Steven Reiss
288 SOUTH MAYO AVENUE
CITY OF INDUSTRY, CA 91789

Mail Date: 04/21/2010

Applicant	: Yun-Lung Chen	: DECISION ON REQUEST FOR
Patent Number	: 7594576	: RECALCULATION of PATENT
Issue Date	: 09/29/2009	: TERM ADJUSTMENT IN VIEW
Appliction No	: 11/145,803	: OF WYETH AND NOTICE OF INTENT TO
Filed	: 06/06/2005	: ISSUE CERTIFICATE OF CORRECTION
		:

The Request for Recalculation is **GRANTED** to the extent indicated.

The patent term adjustment has been determined to be **1042** days. The USPTO will *sua sponte* issue a certificate of correction reflecting the amount of PTA days determined by the recalculation.

Prior to the issuance of the certificate of correction, the USPTO will afford patentee an opportunity to be heard and request reconsideration. Accordingly, patentee has **one month or thirty (30) days**, whichever is longer, to file a request for reconsideration of this patent term adjustment calculation. See 35 U.S.C. 154(b)(3)(B)(ii) and 37 CFR 1.322(a)(4). No extensions of time will be granted under 37 CFR 1.136.

Patentee should use document code PET.OP if electronically filing a request for reconsideration of this patent term adjustment calculation. The patentee must also include the information required by 37 CFR 1.705(b)(2) and the fee required by 37 CFR 1.18(e). If patentee does not file a timely request for reconsideration of this patent term adjustment calculation including the information required by 37 CFR 1.705(b)(2) and the fee required by 37 CFR 1.18(e), the USPTO will issue a certificate of correction reflecting the PTA determination noted above.

Patentee should be aware that in order to preserve the right to review in the United States District Court for the District of Columbia of the USPTO patent term adjustment determination, patentee must ensure that he or she also take the steps required under 35 U.S.C. 154(b)(4)(A) in a timely manner. Nothing in the request for recalculation should be construed as providing an alternative time frame for commencing a civil action under 35 U.S.C. 154(b)(4)(A).

Any questions concerning this decision should be directed to the Office of Patent Legal Administration at 571-272-7702.

UNITED STATES PATENT AND TRADEMARK OFFICE

Commissioner for Patents
United States Patent and Trademark Office
P.O. Box 1450
Alexandria, VA 22313-1450
www.uspto.gov

INTELLECTUAL PROPERTY / TECHNOLOGY LAW
PO BOX 14329
RESEARCH TRIANGLE PARK, NC 27709

COPY MAILED

OCT 13 2005

OFFICE OF PETITIONS

In re Application of
Wojtczak et al.
Application No. 11/145,807
Filed: August 15, 2005
Attorney Docket No. 2771-451 DIV CON 7495

Decision on Petition

This is a decision on the petition filed August 15, 2005, to accord the above-identified application a filing date of June 6, 2005.

The petition is **dismissed**.

Any request for reconsideration must be submitted within TWO (2) MONTHS from the mail date of this decision. No further petition fee is required for the request. Extensions of time under 37 CFR 1.136(a) are NOT permitted. This is **not** final agency action within the meaning of 5 U.S.C. § 704.

Facts:

On June 6, 2005, the application was deposited.

On July 13, 2005, the Office of Initial Patent Examination mailed a Notice stating that drawings were not present and that a filing date had not been accorded and the filing date would be the date of receipt of drawings.

The petition does not allege that drawings were filed on June 6, 2005, with the original application papers.

The petition asserts the contents of the parent application were incorporated by reference and the parent application contained the necessary drawings.

The petition is accompanied by a copy of drawings from the parent application.

Analysis:

The petition is properly treated as a petition under 37 CFR 1.53(e)(2).

Petitioner has not submitted the petition fee of $400.

The merits of a petition will not be considered until the petition fee is filed.

Any request for reconsideration must be accompanied by the $400 petition fee.

Further correspondence with respect to this matter should be addressed as follows:

By facsimile: (573) 273-8300
Attn: Office of Petitions

By mail: Mail Stop Petition
Commissioner for Patents
P.O. Box 1450
Alexandria, VA 22313-1450

If a request for reconsideration is filed, and a decision on the new petition is not received within three months, petitioner may wish to call the number below to check on the status of the renewed petition.

If a request of reconsideration is not timely filed, the file will be forwarded to the Office of Initial Patent Examination for further processing with a filing date of August 15, 2005, the date the missing parts were supplied, using the application papers filed on June 6, 2005, and the six sheets of drawings filed on August 15, 2005.

Telephone inquiries should be directed to Petitions Attorney Steven Brantley at (571) 272-3203.

Charles Steven Brantley
Senior Petitions Attorney
Office of Petitions

UNITED STATES PATENT AND TRADEMARK OFFICE

Commissioner for Patents
United States Patent and Trademark Office
P.O. Box 1450
Alexandria, VA 22313-1450
www.uspto.gov

INTELLECTUAL PROPERTY / TECHNOLOGY LAW
PO BOX 14329
RESEARCH TRIANGLE PARK, NC 27709

COPY MAILED

DEC 28 2005

OFFICE OF PETITIONS

In re Application of
Wojtczak et al.
Application No. 11/145,807
Filed: June 6, 2005
Attorney Docket No. 2771-451 DIV CON

Decision on Petition

This is a decision on the petition filed November 23, 2005, to accord the above-identified application a filing date of June 6, 2005.

The application was deposited on June 6, 2005, without drawings.

On July 13, 2005, the Office of Initial Patent Examination mailed a Notice stating that drawings were missing and that a filing date would be accorded upon receipt of drawings.

In response, the present petition alleges the Uility Patent Application Transmittal sheet incorporated by reference the entire disclosure of the parent application.

The Office allows an applicant to rely upon an incorporation by reference of a parent application when a portion of the child application has been inadvertently omitted.

Based on the incorporation by reference, it appears that drawings were present in the Office on June 6, 2005, albeit in the file of another application, i.e., application No. 10/022,317, on petition, the application may be accorded the requested filing date of June 6, 2005.

In view of the above, the petition is **granted**. The copy of the drawings submitted with the prior petition filed August 15, 2005, will be used for examination purposes.

The Office of Initial Patent Examination will be informed of the instant decision and will process the application with a filing date of June 6, 2005, using the papers filed on June 6, 2005, along with the drawings filed on August 15, 2005.

Telephone inquiries should be directed to Petitions Attorney Steven Brantley at (571) 272-3203.

Charles Steven Brantley
Senior Petitions Attorney
Office of Petitions

UNITED STATES PATENT AND TRADEMARK OFFICE

Commissioner for Patents
United States Patent and Trademark Office
P.O. Box 1450
Alexandria, VA 22313-1450
www.uspto.gov

Paper No.

YOUNG LAW FIRM, P.C.
ALAN W. YOUNG
4370 ALPINE ROAD
SUITE 106
PORTOLA VALLEY CA 94028

COPY MAILED

SEP 17 2008

OFFICE OF PETITIONS

In re Application of	:	
Vetter et al.	:	DECISION ON
Application No. 11/145,808	:	PETITION
Filed: June 6, 2005	:	
Atty Docket No. RUBI5837DIV	:	

This is a decision on the PETITION FOR REVIVAL OF AN APPLICATION FOR PATENT ABANDONED UNINTENTIONALLY UNDER 37 CFR 1.137(b), filed June 2, 2008.

The petition is **GRANTED**.

The above-identified application became abandoned for failure to submit drawings within three months of the mailing date, January 10, 2008, of the Notice of Allowability. This Office action set a three-month nonextendable statutory period for reply. No drawings having been received, the above-identified application became abandoned on April 11, 2008. A courtesy Notice of Abandonment was mailed on April 23, 2008.

The petition included the required reply[1] in the form of submission of drawings; payment of the petition fee set forth in 37 CFR § 1.17(m); and the required statement of unintentional delay. No terminal disclaimer is required.

The Office of Data Management has been advised of this decision. The application is, thereby, forwarded for processing into a patent.

---

[1] The Issue Fee and Publication Fee were timely paid on February 11, 2008.

Telephone inquiries related to this decision should be directed to the undersigned at (571) 272-3219.

Nancy Johnson
Senior Petitions Attorney
Office of Petitions

UNITED STATES PATENT AND TRADEMARK OFFICE

COMMISSIONER FOR PATENTS
UNITED STATES PATENT AND TRADEMARK OFFICE
P.O. BOX 1450
ALEXANDRIA, VA 22313-1450
www.uspto.gov

Paper No.

FRANCIS L. CONTE, ESQ.
6 PURITAN AVENUE
SWAMPSCOTT MA 01907

COPY MAILED

SEP 02 2009

OFFICE OF PETITIONS

In re Application of	:	
Cherry, et al.	:	DECISION ON APPLICATION
Application No. 11/145,848	:	FOR
Filed: June 6, 2005	:	PATENT TERM ADJUSTMENT
Atty Docket No. GE 182855	:	

This is a decision on the "APPLICATION FOR PATENT TERM ADJUSTMENT" filed November 6, 2008. Applicants request that the initial determination of patent term adjustment be corrected from zero (0) to seven hundred twenty one (721) days.

The application for patent term adjustment (PTA) is **GRANTED-IN-Part**. The Patent term Adjustment at the time of the mailing of the notice of allowance is Seven Hundred and Ten (710) days.

The Office has updated the PALM screen to reflect that the correct Patent Term Adjustment determination at the time of the mailing of the Notice of Allowance is 710 days. A copy of the updated PALM screen, showing the correct determination, is enclosed.

On October 31, 2008, the Office mailed the Determination of Patent Term Adjustment under 35 U.S.C. 154(b) in the above-identified application. The Notice stated that the patent term adjustment to date is zero (0) days. On November 6, 2008 applicants timely[1] submitted an application for patent term adjustment (with required fee). Applicants dispute the reduction of 921 days for the filing of an Information Disclosure Statement (IDS) on March 15, 2008. Applicants argue that the IDS was not filed as a supplemental paper.

[1] The Issue Fee payment was also received on March 26, 2007.

Applicants state that the application is not subject to any terminal disclaimers.

Applicant's argument has been considered, and found persuasive. 37 CFR 1.704(c)(8) establishes submission of a supplemental reply or other paper after a reply has been filed as a circumstance that constitutes a failure of an applicant to engage in reasonable efforts to conclude processing or examination of an application.
A review of the record confirms that the IDS was filed on March 15, 2008 prior to the mailing of an Office action on July 16, 2008. Thus, the IDS was not filed as a supplemental paper within the meaning of 37 CFR 1.704(c)(8). The IDS was not filed under circumstances that constitute a failure to engage in reasonable efforts to conclude examination of the examination. Accordingly, no reduction pursuant to 1.704(c)(8) was warranted. The reduction of 921 days has been removed.

In view thereof, the determination of the patent term adjustment at the time of the mailing of the notice of allowance is SEVEN HUNDRED AND TEN (710) days.

The Office acknowledges submission of the $200.00 fee set forth in 37 CFR 1.18(e). No additional fees are required.

Applicants are reminded that any delays by the Office pursuant to 37 CFR 1.702(a)(4) and 1.702(b) and any applicant delays under 37 CFR 1.704(c)(10) will be calculated at the time of the issuance of the patent and applicants will be notified of the revised patent term adjustment to be indicated on the patent in the Issue Notification letter that is mailed to applicants approximately three weeks prior to issuance.

The Office of Data Management has been advised of this decision. This matter is being referred to the Office of Data Management for issuance of the patent.

Telephone inquiries specific to this matter should be directed to the undersigned at (571) 272-7757.

Kery A. Fries

Kery Fries
Legal Advisor
Office of Patent Legal Administration

Enclosure: Copy of adjusted PALM calculation

Day : Wednesday

PALM INTRANET

Date: 9/2/2009
Time: 11:07:40

PTA Calculations for Application: 11/145848			
Application Filing Date:	06/06/2005	PTO Delay (PTO):	710
Issue Date of Patent:		Three Years:	0
Pre-Issue Petitions:	0	Applicant Delay (APPL):	921
Post-Issue Petitions:	0	Total PTA (days):	710
PTO Delay Adjustment:	921		

File Contents History

Number	Date	Contents Description	PTO	APPL	START
61	09/01/2009	ADJUSTMENT OF PTA CALCULATION BY PTO	921		
50	10/31/2008	MAIL NOTICE OF ALLOWANCE			
49	10/30/2008	ISSUE REVISION COMPLETED			
48	10/30/2008	DOCUMENT VERIFICATION			
47	10/30/2008	NOTICE OF ALLOWANCE DATA VERIFICATION COMPLETED			
46	10/29/2008	NOTICE OF ALLOWABILITY			
45	08/22/2008	INFORMATION DISCLOSURE STATEMENT CONSIDERED			
44	10/14/2008	CASE DOCKETED TO EXAMINER IN GAU			
43	08/22/2008	REFERENCE CAPTURE ON IDS			
42	08/22/2008	INFORMATION DISCLOSURE STATEMENT (IDS) FILED		0	40
41	09/17/2008	DATE FORWARDED TO EXAMINER			
40	08/22/2008	RESPONSE AFTER NON-FINAL ACTION			
39	08/22/2008	INFORMATION DISCLOSURE STATEMENT (IDS) FILED			
38	07/16/2008	MAIL NON-FINAL REJECTION	710		-1
37	07/14/2008	NON-FINAL REJECTION			
36	06/14/2005	INFORMATION DISCLOSURE STATEMENT CONSIDERED			
35	06/06/2005	INFORMATION DISCLOSURE STATEMENT CONSIDERED			
34	03/15/2008	INFORMATION DISCLOSURE STATEMENT CONSIDERED			
27	03/15/2008	REFERENCE CAPTURE ON IDS			
26	03/15/2008	INFORMATION DISCLOSURE STATEMENT (IDS) FILED		921	12

25	03/15/2008	INFORMATION DISCLOSURE STATEMENT (IDS) FILED			
24	02/27/2008	CASE DOCKETED TO EXAMINER IN GAU			
23	11/20/2007	CASE DOCKETED TO EXAMINER IN GAU			
22	10/05/2007	CASE DOCKETED TO EXAMINER IN GAU			
21	12/28/2006	PG-PUB ISSUE NOTIFICATION			
20	12/11/2006	IFW TSS PROCESSING BY TECH CENTER COMPLETE			
19.7	06/14/2005	INFORMATION DISCLOSURE STATEMENT (IDS) FILED			
19	06/14/2005	INFORMATION DISCLOSURE STATEMENT (IDS) FILED			
18	06/06/2005	REFERENCE CAPTURE ON IDS			
17.7	06/06/2005	INFORMATION DISCLOSURE STATEMENT (IDS) FILED			
17	06/06/2005	INFORMATION DISCLOSURE STATEMENT (IDS) FILED			
16	09/15/2006	RECEIPT OF ALL ACKNOWLEDGEMENT LETTERS			
15	09/15/2006	RECEIPT OF ACKNOWLEDGMENT LETTER			
14	09/15/2006	RECEIPT OF ACKNOWLEDGMENT LETTER			
13	06/19/2006	RECEIPT OF ACKNOWLEDGMENT LETTER			
12	09/06/2005	APPLICANT RESPONSE RECEIVED			
11	08/30/2005	REQUEST FOR APPLICANT STATEMENT REGARDING POTENTIAL NASA INTEREST (45-DAY LETTER) MAILED			
10	08/29/2005	AGENCY REFERRAL LETTER MAILED			
9	08/29/2005	AGENCY REFERRAL LETTER MAILED			
8	08/27/2005	REFERRED FOR NASA PROPERTY RIGHTS REVIEW BY L&R LARS			
7	08/27/2005	REFERRED BY L&R FOR THIRD-LEVEL SECURITY REVIEW. AGENCY REFERRAL LETTER GENERATED			
6	08/27/2005	REFERRED BY L&R FOR THIRD-LEVEL SECURITY REVIEW. AGENCY REFERRAL LETTER GENERATED			
5	08/02/2005	APPLICATION DISPATCHED FROM OIPE			
4	08/02/2005	APPLICATION IS NOW COMPLETE			
3	06/21/2005	REFERRED TO LEVEL 2 (LARS) BY OIPE CSR			
2	06/17/2005	IFW SCAN & PACR AUTO SECURITY REVIEW			
1	06/06/2005	INITIAL EXAM TEAM NN			

Search Another: Application# [ ] Search

EXPLANATION OF PTA CALCULATION

EXPLANATION OF PTE CALCULATION

To go back, right click here and select Back. To go forward, right click here and select Forward. To refresh, right click here and select Refresh.

Back to OASIS | Home page

UNITED STATES PATENT AND TRADEMARK OFFICE

UNITED STATES DEPARTMENT OF COMMERCE
United States Patent and Trademark Office
Address: COMMISSIONER FOR PATENTS
P.O. Box 1450
Alexandria, Virginia 22313-1450
www.uspto.gov

FRANCIS L. CONTE, ESQ.
6 PURITAN AVENUE
SWAMPSCOTT, MA 01907

Mail Date: 06/30/2010

Applicant	: David Glenn Cherry	: DECISION ON REQUEST FOR
Patent Number	: 7594388	: RECALCULATION of PATENT
Issue Date	: 09/29/2009	: TERM ADJUSTMENT IN VIEW
Application No	: 11/145,848	: OF WYETH AND NOTICE OF INTENT TO
Filed	: 06/06/2005	: ISSUE CERTIFICATE OF CORRECTION
		:

The Request for Recalculation is **GRANTED** to the extent indicated.

The patent term adjustment has been determined to be **1150** days. The USPTO will *sua sponte* issue a certificate of correction reflecting the amount of PTA days determined by the recalculation.

Prior to the issuance of the certificate of correction, the USPTO will afford patentee an opportunity to be heard and request reconsideration. Accordingly, patentee has **one month or thirty (30) days**, whichever is longer, to file a request for reconsideration of this patent term adjustment calculation. See 35 U.S.C. 154(b)(3)(B)(ii) and 37 CFR 1.322(a)(4). No extensions of time will be granted under 37 CFR 1.136.

Patentee should use document code PET.OP if electronically filing a request for reconsideration of this patent term adjustment calculation. The patentee must also include the information required by 37 CFR 1.705(b)(2) and the fee required by 37 CFR 1.18(e). If patentee does not file a timely request for reconsideration of this patent term adjustment calculation including the information required by 37 CFR 1.705(b)(2) and the fee required by 37 CFR 1.18(e), the USPTO will issue a certificate of correction reflecting the PTA determination noted above.

Patentee should be aware that in order to preserve the right to review in the United States District Court for the District of Columbia of the USPTO patent term adjustment determination, patentee must ensure that he or she also take the steps required under 35 U.S.C. 154(b)(4)(A) in a timely manner. Nothing in the request for recalculation should be construed as providing an alternative time frame for commencing a civil action under 35 U.S.C. 154(b)(4)(A).

Any questions concerning this decision should be directed to the Office of Patent Legal Administration at 571-272-7702.

UNITED STATES PATENT AND TRADEMARK OFFICE

UNITED STATES DEPARTMENT OF COMMERCE
United States Patent and Trademark Office
Address: COMMISSIONER FOR PATENTS
P.O. Box 1450
Alexandria, Virginia 22313-1450
www.uspto.gov

Polster, Lieder, Woodruff & Lucchesi, L.C.
12412 Powerscourt Dr. Suite 200
St. Louis, MO 63131-3615

Mail Date: 04/21/2010

Applicant	: James C. Kaiping	: DECISION ON REQUEST FOR
Patent Number	: 7624978	: RECALCULATION of PATENT
Issue Date	: 12/01/2009	: TERM ADJUSTMENT IN VIEW
Appliction No	: 11/145,855	: OF WYETH AND NOTICE OF INTENT TO
Filed	: 06/06/2005	: ISSUE CERTIFICATE OF CORRECTION
		:

The Request for Recalculation is **GRANTED** to the extent indicated.

The patent term adjustment has been determined to be **717** days. The USPTO will *sua sponte* issue a certificate of correction reflecting the amount of PTA days determined by the recalculation.

Prior to the issuance of the certificate of correction, the USPTO will afford patentee an opportunity to be heard and request reconsideration. Accordingly, patentee has **one month or thirty (30) days**, whichever is longer, to file a request for reconsideration of this patent term adjustment calculation. See 35 U.S.C. 154(b)(3)(B)(ii) and 37 CFR 1.322(a)(4). No extensions of time will be granted under 37 CFR 1.136.

Patentee should use document code PET.OP if electronically filing a request for reconsideration of this patent term adjustment calculation. The patentee must also include the information required by 37 CFR 1.705(b)(2) and the fee required by 37 CFR 1.18(e). If patentee does not file a timely request for reconsideration of this patent term adjustment calculation including the information required by 37 CFR 1.705(b)(2) and the fee required by 37 CFR 1.18(e), the USPTO will issue a certificate of correction reflecting the PTA determination noted above.

Patentee should be aware that in order to preserve the right to review in the United States District Court for the District of Columbia of the USPTO patent term adjustment determination, patentee must ensure that he or she also take the steps required under 35 U.S.C. 154(b)(4)(A) in a timely manner. Nothing in the request for recalculation should be construed as providing an alternative time frame for commencing a civil action under 35 U.S.C. 154(b)(4)(A).

Any questions concerning this decision should be directed to the Office of Patent Legal Administration at 571-272-7702.

UNITED STATES PATENT AND TRADEMARK OFFICE

Commissioner for Patents
United States Patent and Trademark Office
P.O. Box 1450
Alexandria, VA 22313-1450
www.uspto.gov

KNOBBE MARTENS OLSON & BEAR
2040 MAIN STREET
FOURTEENTH FLOOR
IRVINE, CA 92614

COPY MAILED
APR 1 2 2006
OFFICE OF PETITIONS

In re Application of	:	
Lawrence Kates	:	
Application No. 11/145,880	:	DECISION ON PETITION
Filed: June 6, 2005	:	TO MAKE SPECIAL UNDER
Attorney Docket No. KATES.042A	:	37 CFR 1.102(c)(1)
	:	

This is a decision on the petition under 37 CFR 1.102(c)(1), filed March 9, 2006, to make the above-identified application special based on applicant's age as set forth in M.P.E.P. § 708.02, Section IV.

The petition is **GRANTED**.

A grantable petition to make an application special under 37 CFR 1.102(c)(1) and MPEP § 708.02, Section IV: Applicant's Age must be accompanied by evidence showing that at least one of the applicants is 65 years of age, or more, such as a birth certificate or a statement by applicant. No fee is required.

The petition includes a statement by Lawrence Kates attesting that he is over 65 years of age. Accordingly, the above-identified application has been accorded "special" status.

Telephone inquiries concerning this decision should be directed to Wan Laymon at 571-272-3220.

All other inquiries concerning either the examination or status of the application should be directed to the Technology Center.

This matter is being referred to Technology Center AU 2612 for action on the merits commensurate with this decision.

Wan Laymon
Petitions Examiner
Office of Petitions

UNITED STATES PATENT AND TRADEMARK OFFICE

Commissioner for Patents
United States Patent and Trademark Office
P.O. Box 1450
Alexandria, VA 22313-1450
www.uspto.gov

MORRISON & FOERSTER LLP
1650 TYSONS BOULEVARD
SUITE 400
MCLEAN VA 22102

COPY MAILED

JUN 29 2007

OFFICE OF PETITIONS

In re Application of	:	
CHEN, Qixu	:	
Application No. 11/145,938	:	DECISION ON PETITION
Filed: June 07, 2005	:	TO WITHDRAW
Attorney Docket No. **146712013000**	:	FROM RECORD

This is a decision on the Request to Withdraw as attorney or agent of record under 37 C.F.R. § 1.36(b), filed March 30, 2007.

The request is **APPROVED**.

A grantable request to withdraw as attorney/agent of record must be signed by every attorney/agent seeking to withdraw or contain a clear indication that one attorney is signing on behalf of another/others. A request to withdraw will not be approved unless at least 30 (thirty) days would remain between the date of approval and the later of the expiration date of a time to file a response or the expiration date of the maximum time period which can be extended under 37 C.F.R. § 1.136(a).

The request was signed by Peter J. Davis on behalf of all attorneys of record who are associated with customer No. 25227. All attorneys/agents associated have been withdrawn. Applicant is reminded that there is no attorney of record at this time.

The request to change the correspondence of record is not acceptable as the requested correspondence address is not that of: (1) the first named signing inventor; or (2) an intervening assignee of the entire interest under 37 C.F.R 3.71. All future communications from the Office will be directed to the first named signing inventor.

There are no outstanding office actions at this time.

Telephone inquiries concerning this decision should be directed to Michelle R. Eason at 571-272-4231.

T. Williams

Terri Williams
Petitions Examiner
Office of Petitions

cc: **QIXU CHEN**
1630 TAHOE DRIVE
MILPITAS, CA 95035

cc: **DARBY & DARBY P.C.**
1500 K STREET, N.W.
SUITE 250
WASHINGTON, D.C. 20005-1714

UNITED STATES PATENT AND TRADEMARK OFFICE

UNITED STATES DEPARTMENT OF COMMERCE
United States Patent and Trademark Office
Address: COMMISSIONER FOR PATENTS
P.O. Box 1450
Alexandria, Virginia 22313-1450
www.uspto.gov

APPLICATION NUMBER	FILING OR 371 (c) DATE	FIRST NAMED APPLICANT	ATTY. DOCKET NO./TITLE
11/145,938	06/07/2005	Qixu Chen	146712013000

CONFIRMATION NO. 5692

OC000000024506403

25227
MORRISON & FOERSTER LLP
1650 TYSONS BOULEVARD
SUITE 400
MCLEAN, VA 22102

Date Mailed: 06/25/2007

NOTICE REGARDING CHANGE OF POWER OF ATTORNEY

This is in response to the Power of Attorney filed 03/30/2007.

- The withdrawal as attorney in this application has been accepted. Future correspondence will be mailed to the new address of record. 37 CFR 1.33.

Michelle R. Gaeson

Office of Initial Patent Examination (571) 272-4000, or 1-800-PTO-9199

FORMER ATTORNEY/AGENT COPY

UNITED STATES PATENT AND TRADEMARK OFFICE

Commissioner for Patents
United States Patent and Trademark Office
P.O. Box 1450
Alexandria, VA 22313-1450
www.uspto.gov

DAVID W. HIGHET, VP & CHIEF IP COUNSEL
BECTON, DICKINSON AND COMPANY
(MORGAN, LEWIS & BOCKIUS, LLP)
1 BECTON DRIVE, MC 110
FRANKLIN LAKES NJ 07417-1880

COPY MAILED

DEC 19 2008

OFFICE OF PETITIONS

In re Application of	:
James Bruce Pitner et al	:
Application No. 11/145,944	: DECISION ON PETITION
Filed: June 7, 2005	: UNDER 37 CFR 1.78(a)(6)
Attorney Docket No. P-6412	:

This is a decision on the petition under 37 CFR 1.78(a)(6), filed October 21, 2008, to accept an unintentionally delayed claim under 35 U.S.C. § 119(e) for the benefit of priority to a prior-filed provisional application.

The petition is **DISMISSED.**

A petition under 37 CFR 1.78(a)(6) is only applicable to those applications filed on or after November 29, 2000. Further, the petition is appropriate only after expiration of the period specified in 37 CFR 1.78(a)(5)(ii) and must be filed during the pendency of the nonprovisional application. In addition, the petition must be accompanied by:

(1) the reference required by 35 U.S.C. § 119(e) and 37 CFR 1.78(a)(5)(i) to the prior-filed application, unless previously submitted;
(2) the surcharge set forth in § 1.17(t); and
(3) a statement that the entire delay between the date the claim was due under 37 CFR 1.78(a)(5)(ii) and the date the claim was filed was unintentional. The Director may require additional information where there is a question whether the delay was unintentional.

This pending nonprovisional application was filed on June 7, 2005, within twelve months of the filing date of the prior-filed provisional application, Application No. 60/577,931, which was filed on June 9, 2004, and for which priority is claimed. A reference to the prior-filed provisional application has been included in an amendment to the first sentence of the specification following the title.

However, the amendment is not acceptable as drafted since it improperly incorporates by reference the prior-filed application. An incorporation by reference statement added after an application's filing date is not effective because no new matter can be added to an application after its filing date (*see* 35 U.S.C. § 132(a)). If an incorporation by reference statement is included in an amendment to the specification to add a benefit claim under 35 U.S.C. § 119(e) after the filing date of the application, the amendment would not be proper. When a benefit claim under 35 U.S.C. § 119(e) is submitted after the filing of an application, the reference to the prior application cannot include an incorporation by reference statement of the prior application. *See* Dart Industries v. Banner, 636 F.2d 684, 207 USPQ 273 (C.A.D.C. 1980). *Note* MPEP §§ 201.06(c) and 608.04(b).

Accordingly, before the petition under 37 CFR 1.78(a)(6) can be granted, a renewed petition under 37 CFR 1.78(a)(6) and either an Application Data Sheet or a substitute amendment (complying with 37 CFR 1.121 and 37 CFR 1.76(b)(5)) deleting the incorporation by reference statement, are required.

Further correspondence with respect to this matter should be addressed as follows:

By mail: Mail Stop PETITIONS
Commissioner for Patents
Post Office Box 1450
Alexandria, VA 22313-1450

By hand: Customer Service Window
Mail Stop Petitions
Randolph Building
401 Dulany Street
Alexandria, VA 22314

By fax: (571) 273-8300
ATTN: Office of Petitions

Any questions concerning this matter may be directed to the undersigned at (571) 272-3208.

Karen Creasy

Karen Creasy
Petitions Examiner
Office of Petitions

UNITED STATES PATENT AND TRADEMARK OFFICE

Commissioner for Patents
United States Patent and Trademark Office
P.O. Box 1450
Alexandria, VA 22313-1450
www.uspto.gov

DAVID W. HIGHET, VP & CHIEF IP COUNSEL
BECTON, DICKINSON AND COMPANY
(MORGAN, LEWIS & BOCKIUS, LLP)
1 BECTON DRIVE, MC 110
FRANKLIN LAKES NJ 07417-1880

COPY MAILED

FEB 1 1 2009

OFFICE OF PETITIONS

In re Application of	:	
James Bruce Pitner et al	:	
Application No. 11/145,944	:	DECISION ON PETITION
Filed: June 7, 2005	:	UNDER 37 CFR 1.78(a)(6)
Attorney Docket No. P-6412	:	

This is a decision on the renewed petition under 37 CFR 1.78(a)(6), filed January 13, 2009, to accept an unintentionally delayed claim under 35 U.S.C. §119(e) for the benefit of the prior-filed provisional application set forth in the concurrently filed amendment.

The petition is **GRANTED.**

A petition under 37 CFR 1.78(a)(6) is only applicable to those applications filed on or after November 29, 2000. Further, the petition is appropriate only after expiration of the period specified in 37 CFR 1.78(a)(5)(ii) and must be filed during the pendency of the nonprovisional application. In addition, the petition must be accompanied by:

(1) the reference required by 35 U.S.C. § 119(e) and 37 CFR 1.78(a)(5)(i) to the prior-filed application, unless previously submitted;
(2) the surcharge set forth in § 1.17(t); and
(3) a statement that the entire delay between the date the claim was due under 37 CFR 1.78(a)(5)(ii) and the date the claim was filed was unintentional. The Director may require additional information where there is a question whether the delay was unintentional.

Additionally, the instant nonprovisional application must be pending at the time of filing of the reference to the prior-filed provisional application as required by 37 CFR 1.78(a)(5)(ii). Further, the nonprovisional application claiming the benefit of the prior-filed provisional application must have been filed within twelve months of the filing date of the prior-filed provisional application.

All of the above requirements having been satisfied, the late claim for priority under 35 U.S.C. § 119(e) is accepted as being unintentionally delayed.

The granting of the petition to accept the delayed benefit claim to the prior-filed application under 37 CFR 1.78(a)(6) should not be construed as meaning that this application is entitled to the benefit of the filing date of the prior-filed application. In order for this application to be entitled to the benefit of the prior-filed application, all other requirements under 35 U.S.C. §119(e) and 37 CFR 1.78(a)(4) and (a)(5) must be met. Similarly, the fact that the corrected Filing Receipt accompanying this decision on petition includes the prior-filed application should not be construed as meaning that applicant is entitled to the claim for benefit of priority to the prior-filed application noted thereon. Accordingly, the examiner will, in due course, consider this benefit claim and determine whether the application is entitled to the benefit of the earlier filing date.

A replacement Filing Receipt, which includes the priority claim to the prior-filed provisional application, accompanies this decision on petition.

Any inquiries concerning this decision may be directed to the undersigned at (571) 272-3208. All other inquiries concerning either the examination procedures or status of the application should be directed to the Technology Center.

The application is being forwarded to Technology Center AU 1797 for consideration by the examiner of the claim under 35 U.S.C. §119(e) for the benefit of priority to the prior-filed provisional application.

Karen Creasy

Karen Creasy
Petition Examiner
Office of Petitions

ATTACHMENT: Replacement Filing Receipt

UNITED STATES PATENT AND TRADEMARK OFFICE

UNITED STATES DEPARTMENT OF COMMERCE
United States Patent and Trademark Office
Address: COMMISSIONER FOR PATENTS
P.O. Box 1450
Alexandria, Virginia 22313-1450
www.uspto.gov

APPLICATION NUMBER	FILING or 371(c) DATE	GRP ART UNIT	FIL FEE REC'D	ATTY.DOCKET.NO	TOT CLAIMS	IND CLAIMS
11/145,944	06/07/2005	1797	1050	P-6412	21	1

CONFIRMATION NO. 4591

REPLACEMENT FILING RECEIPT

OC000000034503613

46851
David W. Highet, VP & Chief IP Counsel
Becton, Dickinson and Company
(Morgan, Lewis & Bockius, LLP)
1 Becton Drive, MC 110
Franklin Lakes, NJ 07417-1880

Date Mailed: 02/11/2009

Receipt is acknowledged of this non-provisional patent application. The application will be taken up for examination in due course. Applicant will be notified as to the results of the examination. Any correspondence concerning the application must include the following identification information: the U.S. APPLICATION NUMBER, FILING DATE, NAME OF APPLICANT, and TITLE OF INVENTION. Fees transmitted by check or draft are subject to collection. Please verify the accuracy of the data presented on this receipt. **If an error is noted on this Filing Receipt, please submit a written request for a Filing Receipt Correction. Please provide a copy of this Filing Receipt with the changes noted thereon. If you received a "Notice to File Missing Parts" for this application, please submit any corrections to this Filing Receipt with your reply to the Notice. When the USPTO processes the reply to the Notice, the USPTO will generate another Filing Receipt incorporating the requested corrections**

Applicant(s)

James Bruce Pitner, Durham, NC;
Glenn Vonk, Fuquay-Varina, NC;

Power of Attorney: The patent practitioners associated with Customer Number 46851

Domestic Priority data as claimed by applicant

This appln claims benefit of 60/577,931 06/09/2004

Foreign Applications

If Required, Foreign Filing License Granted: 02/10/2009

The country code and number of your priority application, to be used for filing abroad under the Paris Convention, is **US 11/145,944**

Projected Publication Date: Not Applicable

Non-Publication Request: No

Early Publication Request: No

Title

Multianalyte sensor

Preliminary Class

436

PROTECTING YOUR INVENTION OUTSIDE THE UNITED STATES

Since the rights granted by a U.S. patent extend only throughout the territory of the United States and have no effect in a foreign country, an inventor who wishes patent protection in another country must apply for a patent in a specific country or in regional patent offices. Applicants may wish to consider the filing of an international application under the Patent Cooperation Treaty (PCT). An international (PCT) application generally has the same effect as a regular national patent application in each PCT-member country. The PCT process **simplifies** the filing of patent applications on the same invention in member countries, but **does not result** in a grant of "an international patent" and does not eliminate the need of applicants to file additional documents and fees in countries where patent protection is desired.

Almost every country has its own patent law, and a person desiring a patent in a particular country must make an application for patent in that country in accordance with its particular laws. Since the laws of many countries differ in various respects from the patent law of the United States, applicants are advised to seek guidance from specific foreign countries to ensure that patent rights are not lost prematurely.

Applicants also are advised that in the case of inventions made in the United States, the Director of the USPTO must issue a license before applicants can apply for a patent in a foreign country. The filing of a U.S. patent application serves as a request for a foreign filing license. The application's filing receipt contains further information and guidance as to the status of applicant's license for foreign filing.

Applicants may wish to consult the USPTO booklet, "General Information Concerning Patents" (specifically, the section entitled "Treaties and Foreign Patents") for more information on timeframes and deadlines for filing foreign patent applications. The guide is available either by contacting the USPTO Contact Center at 800-786-9199, or it can be viewed on the USPTO website at http://www.uspto.gov/web/offices/pac/doc/general/index.html.

For information on preventing theft of your intellectual property (patents, trademarks and copyrights), you may wish to consult the U.S. Government website, http://www.stopfakes.gov. Part of a Department of Commerce initiative, this website includes self-help "toolkits" giving innovators guidance on how to protect intellectual property in specific countries such as China, Korea and Mexico. For questions regarding patent enforcement issues, applicants may call the U.S. Government hotline at 1-866-999-HALT (1-866-999-4158).

LICENSE FOR FOREIGN FILING UNDER

Title 35, United States Code, Section 184

Title 37, Code of Federal Regulations, 5.11 & 5.15

GRANTED

The applicant has been granted a license under 35 U.S.C. 184, if the phrase "IF REQUIRED, FOREIGN FILING LICENSE GRANTED" followed by a date appears on this form. Such licenses are issued in all applications where the conditions for issuance of a license have been met, regardless of whether or not a license may be required as

set forth in 37 CFR 5.15. The scope and limitations of this license are set forth in 37 CFR 5.15(a) unless an earlier license has been issued under 37 CFR 5.15(b). The license is subject to revocation upon written notification. The date indicated is the effective date of the license, unless an earlier license of similar scope has been granted under 37 CFR 5.13 or 5.14.

This license is to be retained by the licensee and may be used at any time on or after the effective date thereof unless it is revoked. This license is automatically transferred to any related applications(s) filed under 37 CFR 1.53(d). This license is not retroactive.

The grant of a license does not in any way lessen the responsibility of a licensee for the security of the subject matter as imposed by any Government contract or the provisions of existing laws relating to espionage and the national security or the export of technical data. Licensees should apprise themselves of current regulations especially with respect to certain countries, of other agencies, particularly the Office of Defense Trade Controls, Department of State (with respect to Arms, Munitions and Implements of War (22 CFR 121-128)); the Bureau of Industry and Security, Department of Commerce (15 CFR parts 730-774); the Office of Foreign AssetsControl, Department of Treasury (31 CFR Parts 500+) and the Department of Energy.

NOT GRANTED

No license under 35 U.S.C. 184 has been granted at this time, if the phrase "IF REQUIRED, FOREIGN FILING LICENSE GRANTED" DOES NOT appear on this form. Applicant may still petition for a license under 37 CFR 5.12, if a license is desired before the expiration of 6 months from the filing date of the application. If 6 months has lapsed from the filing date of this application and the licensee has not received any indication of a secrecy order under 35 U.S.C. 181, the licensee may foreign file the application pursuant to 37 CFR 5.15(b).

UNITED STATES PATENT AND TRADEMARK OFFICE

Commissioner for Patents
United States Patent and Trademark Office
P.O. Box 1450
Alexandria, VA 22313-1450
www.uspto.gov

March 24, 2007

Patent No. : 7,159,330 B2
Ser. No. : 11/145,963
Inventor(s) : Yoshihiro Takaya, et al.
Issued : January 9, 2007
Title : **OIL LEVEL GAUGE GUIDE STRUCTURE**
Docket No. : **023971-0574**

Re: Request for Certificate of Correction

Consideration has been given your request for the issuance of a certificate of correction for the above-identified patent under the provisions of Rule(s) 1.322 and/or 1.323.

Assignees' names and addresses (assignment data) printed in a patent, are based *solely* on information supplied in the appropriate space for identifying the assignment data, i.e., item 3 of the Issue Fee Transmittal Form PTOL-85B. Granting of a request under 37 CFR 3.81(b) is required to correct applicant's error providing ***incorrect or erroneous*** assignment data, *before* issuance of a Certificate of Correction, under 37 CFR 1.323 *(see Manual of Patent Examining Procedures (M.P.E.P) Chp.1400, sect. 1481).* This procedure is required *at any time after the issue fee is paid*, including after issuance of the patent.

In view of the foregoing, your request, in this mater, is hereby denied.

A request to correct the Assignee under 37 CFR 3.81(b) should include:

A. **the processing fee set forth in 37 CFR 1.117(h) (currently $130);**
B. a statement that the failure to include the correct assignee name on the PTOL-85B was inadvertent; and
C. a copy of the Notice of Recordation of Assignment Document, reflecting the reel and frame number where the assignment(s) is recorded and/or reflecting proof of *the date* the assignment was submitted for recordation.

In the Request, Applicant(s) may request that the file be forwarded to Certificates of Correction Branch, for issuance of a Certificate of Correction, if the Request is granted.

Any request under 37 CFR 3.81(b) should be directed to the following address or facsimile number:

By mail: Mail Stop PETITIONS
Commissioner for Patents
Post Office Box 1450
Alexandria, VA 22313-1450

By hand: Customer Service Window
Mail Stop Petitions
Randolph Building
401 Dulany Street
Alexandria, VA 22314

By fax: (703) 872-9306
ATTN: Office of Petitions

If a fee (currently $100) was previously submitted for consideration of a Request for Certificate of Correction, under CFR 1.323, to correct assignment data, , no additional fee is required.

Antonio Johnson
For Cecelia Newman
Decisions & Certificates
of Correction Branch
(703) 308-9390 ext. 111 or (703) 308-8309

Washington Harbour
3000 K Street, N.W. – Suite 500
Washington, D. C. 20007-5143

UNITED STATES PATENT AND TRADEMARK OFFICE

Commissioner for Patents
United States Patent and Trademark Office
P.O. Box 1450
Alexandria, VA 22313-1450
www.uspto.gov

FOLEY AND LARDNER LLP
SUITE 500
3000 K STREET NW
WASHINGTON DC 20007

COPY MAILED

DEC 13 2007

OFFICE OF PETITIONS

In re Patent No. 7,159,330	:	
Issue Date: January 9, 2007	:	
Application No. 11/145,963	:	DECISION ON PETITION
Filed: June 7, 2005	:	
Attorney Docket No. 023971-0574	:	

This is a decision on the request under 37 CFR 3.81(b), filed April 25, 2007, to include an inadvertently omitted assignee's name on the front page of the above-identified patent by way of a Certificate of Correction.

The request is **GRANTED**.

Telephone inquiries concerning this decision may be directed to the undersigned at (571) 272-3218. Inquiries regarding the issuance of a certificate of correction should be directed to the Certificate of Correction Branch at (571) 272-4200.

The Certificates of Correction Branch will be notified of this decision granting the petition under 37 CFR 3.81(b) and directing issuance of the requested Certificate of Correction.

Frances Hicks

Frances Hicks
Petitions Examiner
Office of Petitions

UNITED STATES PATENT AND TRADEMARK OFFICE

Commissioner for Patents
United States Patent and Trademark Office
P.O. Box 1450
Alexandria, VA 22313-1450
www.uspto.gov

HANIFY & KING PROFESSIONAL CORPORATION
1055 THOMAS JEFFERSON STREET, NW
SUITE 400
WASHINGTON DC 20007

COPY MAILED

JAN 07 2010

In re Application of	:	
Naito et al.	:	
Application No. 11/145,971	:	DECISION ON PETITION
Filed: June 7, 2005	:	
Attorney Docket No. 5255-051-US01	:	

This is a decision on the petition, filed December 18, 2009, which is being treated as a petition under 37 CFR 1.181 (no fee) requesting withdrawal of the holding of abandonment in the above-identified application.

The petition is **GRANTED**.

This application was held abandoned for failure to reply to the non-final Office action mailed May 1, 2009, which set a three (3) month shortened statutory period for reply. A Notice of Abandonment was mailed on December 4, 2009.

Petitioner asserts that the Office action dated May 1, 2009 was not received.

A review of the written record indicates no irregularity in the mailing of the Office action, and, in the absence of any irregularity, there is a strong presumption that the Office action was properly mailed to the practitioner at the address of record. This presumption may be overcome by a showing that the Office action was not in fact received. In this regard, the showing required to establish the failure to receive the Office action must consist of the following:

1. a statement from practitioner stating that the Office action was not received by the practitioner;

2. a statement from the practitioner attesting to the fact that a search of the file jacket and docket records indicates that the Office action was not received; and

3. a copy of the docket record where the nonreceived Office action would have been entered had it been received must be attached to and referenced in the practitioner's statement.

See MPEP § 711.03(c) under subheading "Petition to Withdraw Holding of Abandonment Based on Failure to Receive Office Action," and "Withdrawing the Holding of Abandonment When Office Actions Are Not Received," 1156 Official Gazette 53 (November 16, 1993).

The petition satisfies the above-stated requirements. Accordingly, the application was not abandoned in fact.

In view of the above, the Notice of Abandonment is hereby vacated and the holding of abandonment withdrawn.

This application is being referred to the Technology Center technical support staff of Art Unit 2183 for re-mailing the Office action of May 1, 2009. The period for reply will run from the mailing date of the Office action.

Liana Walsh
Petitions Examiner
Office of Petitions

UNITED STATES PATENT AND TRADEMARK OFFICE

Commissioner for Patents
United States Patent and Trademark Office
P.O. Box 1450
Alexandria, VA 22313-1450
www.uspto.gov

Paper No.

COPY MAILED

MAR 24 2008

OFFICE OF PETITIONS

HARNESS, DICKEY & PIERCE, P.L.C.
P.O. BOX 8910
RESTON VA 20195

In re Application of Hyung-Jik Byun et al. Application No. 11/145,999 Filed: June 7, 2005 Attorney Docket No.: 25611-000123/US Title: PCB, MANUFACTURING METHOD THEREOF AND SEMICONDUCTOR PACKAGE IMPLEMENTING THE SAME	:	DECISION ON PETITION PURSUANT TO 37 C.F.R. § 1.181

This is a decision on the petition filed January 31, 2008, pursuant to 37 C.F.R. § 1.181, requesting that the holding of abandonment in the above-identified application be withdrawn.

BACKGROUND

The above-identified application became abandoned for failure to file a proper response to the Restriction Requirement, mailed April 12, 2007, which set a shortened statutory period to reply for one month. No extensions of time under the provisions of 37 C.F.R. § 1.136(a) were received. Accordingly, the above-identified application became abandoned on May 13, 2007. A Notice of abandonment was mailed on November 19, 2007.

RELEVANT PORTION OF THE M.P.E.P.

M.P.E.P. § 711.03(c) sets forth, *in pertinent part*:

PETITION TO WITHDRAW HOLDING OF ABANDONMENT BASED ON FAILURE TO RECEIVE OFFICE ACTION

In Delgar v. Schulyer, 172 USPQ 513 (D.D.C. 1971), the court decided that the Office should mail a new Notice of Allowance in view of the evidence presented in support of the contention that the applicant's representative did not receive the original Notice of Allowance. Under the reasoning of Delgar, an allegation that an Office action was never received may be considered in a petition to withdraw the holding of abandonment. If adequately supported, the Office may grant the petition to withdraw the holding of abandonment and remail the Office action. That is, the reasoning of Delgar is applicable regardless of whether an application is held abandoned for failure to timely pay the issue fee (35 U.S.C. 151) or for failure to prosecute (35 U.S.C. 133).

To minimize costs and burdens to practitioners and the Office, the Office has modified the showing required to establish nonreceipt of an Office action. The showing required to establish nonreceipt of an Office communication must include a statement from the practitioner stating that the Office communication was not received by the practitioner and attesting to the fact that a search of the file jacket and docket records indicates that the Office communication was not received. A copy of the docket record where the nonreceived Office communication would have been entered had it been received and docketed must be attached to and referenced in practitioner's statement (emphasis added). For example, if a three month period for reply was set in the nonreceived Office action, a copy of the docket report showing all replies docketed for a date three months from the mail date of the nonreceived Office action must be submitted as documentary proof of nonreceipt of the Office action. See Notice entitled "Withdrawing the Holding of Abandonment When Office Actions Are Not Received," 1156 O.G. 53 (November 16, 1993).

The showing outlined above may not be sufficient if there are circumstances that point to a conclusion that the Office action may have been lost after receipt rather than a conclusion that the Office action was lost in the mail (e.g., if the practitioner has a history of not receiving Office actions).

Evidence of nonreceipt of an Office communication or action (e.g., Notice of Abandonment or an advisory action) other than that action to which reply was required to avoid abandonment would not warrant withdrawal of the holding of abandonment. Abandonment takes place by operation of law for failure to reply to an Office action or timely pay the issue fee, not by operation of the mailing of a Notice of Abandonment. See Lorenz v. Finkl, 333 F.2d 885, 889-90, 142 USPQ 26, 29-30 (CCPA 1964); Krahn v. Commissioner, 15 USPQ2d 1823, 1824 (E.D. Va 1990); In re Application of Fischer, 6 USPQ2d 1573, 1574 (Comm'r Pat. 1988).

Two additional procedures are available for reviving an application that has become abandoned due to a failure to reply to an Office Action: (1) a petition under 37 CFR 1.137(a) based upon unavoidable delay; and (2) a petition under 37 CFR 1.137(b) based on unintentional delay.

ANALYSIS

Petitioner has set forth that both the file jacket that is associated with this application and the firm docket records have been reviewed. This statement is being construed to mean that Petitioner personally conducted this review, and as such, is in possession of firsthand knowledge of the facts which he has set forth. Petitioner must notify the Office if this is not

a correct interpretation of the statement contained in this petition.

With this petition, Petitioner has alleged that the mailing was not received, has set forth that he has searched both the file jacket and the docket records, and has included copies of the latter.

CONCLUSION

Considering the facts and circumstances of the delay at issue, as set forth on petition, it is concluded that Petitioner has met his burden of establishing that the mailing was not received.

Accordingly, the petition under 37 C.F.R. § 1.181(a) is **GRANTED**. The holding of abandonment is **WITHDRAWN**.

The Technology Center will be notified of this decision. The Technology Center's support staff will re-mail the Restriction Requirement of April 12, 2007, and will set a new period for response.

Telephone inquiries regarding this decision should be directed to the undersigned at (571) 272-3225[1]. All other inquiries concerning examination procedures or status of the application should be directed to the Technology Center.

/Paul Shanoski/
Paul Shanoski
Senior Attorney
Office of Petitions

---

1 Petitioner will note that all practice before the Office should be in writing, and the action of the Office will be based exclusively on the written record in the Office. See 37 C.F.R. § 1.2. As such, Petitioner is reminded that no telephone discussion may be controlling or considered authority for any further action(s) of Petitioner.

UNITED STATES PATENT AND TRADEMARK OFFICE

Commissioner for Patents
United States Patent and Trademark Office
P.O. Box 1450
Alexandria, VA 22313-1450
www.uspto.gov

ANTONELLI, TERRY, STOUT & KRAUS, LLP
1300 NORTH SEVENTEENTH STREET
SUITE 1800
ARLINGTON, VA 22209-3873

COPY MAILED

MAY 15 2009

OFFICE OF PETITIONS

In re Application of	:	
Keown et al.	:	DECISION ON PETITION
Application No. 11/146,013	:	TO WITHDRAW
Filed: June 6, 2005	:	FROM RECORD
Attorney Docket No. 23952-0133	:	

This is a decision on the Request to Withdraw as attorney or agent of record under 37 C.F.R. § 1.36(b), filed June 28, 2005.

The request is **NOT APPROVED** because it is moot.

A review of the file record indicates that the power of attorney to practitioners associated with Antonelli, Terry, Stout & Kraus, LLP, has been revoked by the assignee of the patent application on October 7, 2005. Accordingly, the request to withdraw under 37 C.F.R. § 1.36(b) is moot.

All future communications from the Office will continue to be directed to the below-listed address until otherwise notified by applicant.

Telephone inquires concerning this decision should be directed to the undersigned at 571-272-6059.

A. Kelley

Alicia Kelley
Petitions Examiner
Office of Petitions

cc: SUTHERLAND II
SUTHERLAND, ASBILL & BRENNAN, LLC
999 PEACHTREE STREET
ATLANTA GA 30309

UNITED STATES PATENT AND TRADEMARK OFFICE

UNITED STATES DEPARTMENT OF COMMERCE
United States Patent and Trademark Office
Address: COMMISSIONER FOR PATENTS
P.O. Box 1450
Alexandria, Virginia 22313-1450
www.uspto.gov

SUTHERLAND II
SUTHERLAND, ASBILL & BRENNAN, LLC
999 PEACHTREE STREET
ATLANTA, GA 30309

Mail Date: 04/21/2010

Applicant	: Blake Keown	: DECISION ON REQUEST FOR
Patent Number	: 7606787	: RECALCULATION of PATENT
Issue Date	: 10/20/2009	: TERM ADJUSTMENT IN VIEW
Appliction No	: 11/146,013	: OF WYETH AND NOTICE OF INTENT TO
Filed	: 06/07/2005	: ISSUE CERTIFICATE OF CORRECTION
		:

The Request for Recalculation is **GRANTED** to the extent indicated.

The patent term adjustment has been determined to be **910** days. The USPTO will *sua sponte* issue a certificate of correction reflecting the amount of PTA days determined by the recalculation.

Prior to the issuance of the certificate of correction, the USPTO will afford patentee an opportunity to be heard and request reconsideration. Accordingly, patentee has **one month or thirty (30) days**, whichever is longer, to file a request for reconsideration of this patent term adjustment calculation. See 35 U.S.C. 154(b)(3)(B)(ii) and 37 CFR 1.322(a)(4). No extensions of time will be granted under 37 CFR 1.136.

Patentee should use document code PET.OP if electronically filing a request for reconsideration of this patent term adjustment calculation. The patentee must also include the information required by 37 CFR 1.705(b)(2) and the fee required by 37 CFR 1.18(e). If patentee does not file a timely request for reconsideration of this patent term adjustment calculation including the information required by 37 CFR 1.705(b)(2) and the fee required by 37 CFR 1.18(e), the USPTO will issue a certificate of correction reflecting the PTA determination noted above.

Patentee should be aware that in order to preserve the right to review in the United States District Court for the District of Columbia of the USPTO patent term adjustment determination, patentee must ensure that he or she also take the steps required under 35 U.S.C. 154(b)(4)(A) in a timely manner. Nothing in the request for recalculation should be construed as providing an alternative time frame for commencing a civil action under 35 U.S.C. 154(b)(4)(A).

Any questions concerning this decision should be directed to the Office of Patent Legal Administration at 571-272-7702.

UNITED STATES PATENT AND TRADEMARK OFFICE

UNITED STATES DEPARTMENT OF COMMERCE
United States Patent and Trademark Office
Address: COMMISSIONER FOR PATENTS
P.O. Box 1450
Alexandria, Virginia 22313-1450
www.uspto.gov

SUTHERLAND II
SUTHERLAND, ASBILL & BRENNAN, LLC
999 PEACHTREE STREET
ATLANTA, GA 30309

Mail Date: 05/18/2010

Applicant : Blake Keown
Patent Number : 7606787
Issue Date : 10/20/2009
Application No : 11/146,013
Filed : 06/07/2005

: NOTICE CONCERNING IMPROPER
: CALCULATION OF PATENT TERM
: ADJUSTMENT BASED UPON USPTO
: IMPROPERLY MEASURING REDUCTION
: PERIOD UNDER 37 CFR 1.704(c)(10).

The United States Patent and Trademark Office (USPTO) discovered that in processing the recent recalculation decisions mailed in response to patentee's filed Request for Recalculation of Patent Term Adjustment in view of Wyeth, the USPTO improperly measured the reduction period for reductions under 37 CFR 1.704(c)(10). Pursuant to 37 CFR 1.704(c)(10), patentee's reduction begins on the date of filing the amendment under 37 CFR 1.312 ("1.312 amendment") or other related paper and ends on the date that the Office mails a response to the filing of the 1.312 amendment or other paper. It has been discovered that during the recalculation, the calculation failed to the limit the reduction to the mail date of the response to the 1.312 amendment or other paper. Accordingly, patentee's reductions were greater than warranted.

This notice **VACATES** the previous GRANTED request for recalculation and provides patentee with a revised GRANTED recalculation.

The patent term adjustment has been determined to be **956** days. The USPTO will *sua sponte* issue a certificate of correction reflecting the amount of patent term adjustment (PTA) days determined by the recalculation.

Prior to the issuance of the certificate of correction, the USPTO will afford patentee an opportunity to be heard and request reconsideration. Accordingly, patentee has **one month or thirty (30) days** from the mail date of this notice, whichever is longer, to file a request for reconsideration of this PTA calculation. See 35 U.S.C. § 154(b)(3)(B)(ii) and 37 CFR 1.322(a)(4).

Patentee should use document code PET.OP if electronically filing a request for reconsideration of this PTA calculation. The patentee must also include the information required by 37 CFR 1.705(b)(2), and the fee required by 37 CFR 1.18(e). If patentee does not file a timely request for reconsideration of this PTA calculation, including the information required by 37 CFR 1.705(b)(2) and the fee required by 37 CFR 1.18(e), the USPTO will issue a certificate of correction reflecting the PTA determination noted above.

Patentee should be aware that in order to preserve the right of review of the USPTO's PTA determination in the United States District Court for the District of Columbia, patentee must ensure that the steps required under 35 U.S.C. § 154 (b)(4) are taken in a timely manner. Nothing in the request for recalculation should be construed as providing an alternative time frame for commencing a civil action under 35 U.S.C. § 154(b)(4).

UNITED STATES PATENT AND TRADEMARK OFFICE

Commissioner for Patents
United States Patent and Trademark Office
P.O. Box 1450
Alexandria, VA 22313-1450
www.uspto.gov

OCT 11 2005

ALFRED A. STADNICKI
ANTONELLI, TERRY, STOUT, KRAUS, LLP
SUITE 1800
ARLINGTON, VA 22209

In re application of Michele Pierdinock et al. Application No. 11/146,015 Filed: June 07, 2005 For: AUTOMATED ACTIONS BASED ON RESTRICTIONS	: : : : :	**DECISION ON PETITION TO MAKE SPECIAL (ACCELERATED EXAMINATION)**

This is in response to the petition filed on June 16, 2005 to make the above-identified application special on the basis of special examining procedure for certain new applications - accelerated examination as set forth in MPEP § 708.02 VIII.

The requirements for granting special status under this section are: (A) a petition to make special accompanied by the fee set forth in 37 CFR 1.17(h); (B) all claims being directed to a single invention, or an election without traverse if the Office determines that all the claims are not directed to a single invention; (C) a statement that a pre-examination search was made listing the field of search; (D) one copy of each of the references deemed most closely related to the subject matter encompassed by the claims if said references are not already of record; and (E) a detailed discussion of how the claimed subject matter is patentable over the references in accordance with 37 CFR 1.111 (b) and (c).

The petition fails to adequately meet requirement (E) above. Regarding item (E), the petition does not include a detailed discussion of how the claimed subject matter is patentable over each of the references deemed most closely related to the subject matter encompassed by the claims.

For the above stated reasons, the petition is **DISMISSED**.

Petitioner is given one more opportunity to perfect the petition. Any request for reconsideration must be filed within TWO MONTHS of the date of this decision. Extensions of time under 37 CFR 1.136(a) are permitted.

Applicant should promptly submit a renewed petition to the Commissioner for Patents, P.O. Box 1450, Alexandria, VA 22313-1450. The envelope should indicate that the correspondence be brought to the attention of Technology Center 3600.

Until the renewed petition is submitted, the application will be returned to the examiner's docket to await treatment on the merits in the normal order of examination.

Kenneth Dorner
Special Programs Examiner
Technology Center 3600
(571) 272-6587

KJD/slb: 10/03/05

UNITED STATES PATENT AND TRADEMARK OFFICE

Commissioner for Patents
United States Patent and Trademark Office
P.O. Box 1450
Alexandria, VA 22313-1450
www.uspto.gov

FEB - 1 2006

ALFRED A. STADNICKI
ANTONELLI, TERRY, STOUT, KRAUS, LLP
SUITE 1800
ARLINGTON, VA 22209

In re application of	:	**DECISION ON PETITION**
Michele Pierdinock et al.	:	**TO MAKE SPECIAL**
Application No. 11/146,015	:	**(ACCELERATED**
Filed: June 07, 2005	:	**EXAMINATION)**
For: AUTOMATED ACTIONS BASED ON RESTRICTIONS		

This is in response to the petition filed on December 14, 2005 to make the above-identified application special on the basis of special examining procedure for certain new applications - accelerated examination as set forth in MPEP § 708.02 VIII.

The requirements for granting special status under this section are: (A) a petition to make special accompanied by the fee set forth in 37 CFR 1.17(i); (B) all claims being directed to a single invention, or an election without traverse if the Office determines that all the claims are not directed to a single invention; (C) a statement that a pre-examination search was made listing the field of search; (D) one copy of each of the references deemed most closely related to the subject matter encompassed by the claims if said references are not already of record; and (E) a detailed discussion of how the claimed subject matter is patentable over the references in accordance with 37 CFR 1.111 (b) and (c).

Since all of the requirements for special status under MPEP § 708.02 VIII have been met, the petition is **GRANTED**.

The examiner is directed (1) to make an interference search for possible interfering applications, (2) to promptly examine this application out of turn, and (3) if any interfering application is discovered, to examine such application simultaneously and state in the first official letter of such application that it is being taken out of turn because of a possible interference.

Petitioner is advised that this application will continue to be special, throughout its entire prosecution and pendency, including interference or appeal, if any, only if petitioner makes a prompt ***bona fide*** effort, in response to each Office action, to place the application in condition for allowance, even if it is necessary to conduct an interview with the examiner to accomplish this purpose.

SUMMARY: Petition to Make Special **GRANTED**.

Kenneth J. Dorner
Special Programs Examiner
Technology Center 3600
(571) 272-6587

KJD/slb: 01/17/06

UNITED STATES PATENT AND TRADEMARK OFFICE

Commissioner for Patents
United States Patent and Trademark Office
P.O. Box 1450
Alexandria, VA 22313-1450
www.uspto.gov

SUTHERLAND II
SUTHERLAND, ASBILL & BRENNAN, LLC
999 PEACHTREE STREET
ATLANTA GA 30309

MAILED

NOV 09 2009

OFFICE OF PETITIONS

In re Application of	:	
Pierdinock et al.	:	ON APPLICATION FOR
Application No. 11/146015	:	PATENT TERM ADJUSTMENT
Filing or 371(c) Date: 06/07/2005	:	
Attorney Docket Number: 23952-0070	:	

This is in response to the APPLICATION FOR PATENT TERM UNDER 37 C.F.R. §1.705(d), filed July 29, 2009. This matter is being properly treated under 37 CFR 1.705(b) as an application for patent term adjustment. Applicant submits that the correct patent term adjustment to be indicated on the patent is 747 days, not 564 days as calculated by the Office as of the mailing of the initial determination of patent term adjustment. Applicant requests this correction solely on the basis that the Office will take in excess of three years to issue this patent.

As the instant application for patent term adjustment requests reconsideration of the patent term adjustment as it relates to the Office's failure to issue the patent within 3 years of the filing date, the application for patent term adjustment under 37 CFR 1.705(b) is **DISMISSED as PREMATURE**.

Knowledge of the actual date the patent issues is required to calculate the amount, if any, of additional patent term patentee is entitled to for Office failure to issue the patent within 3 years. See § 1.702(b). (This is true even where a request for continued examination (RCE) was filed). The computer will not undertake the § 1.702(b) calculation until the actual date of issuance of the patent has been determined. Likewise, the computer will not calculate any further Office delay under § 1.702(a)(4) or applicant delay under § 1.704(c)(10) until the actual date of issuance of the patent has been determined. As such, the Office can not make a determination on the correctness of the patent term adjustment until the patent has issued.

Requesting reconsideration of the patent term adjustment to be indicated on the patent under 37 CFR 1.705(b) based on the initial determination of patent term adjustment and a projected issuance date of the patent (or even the filing date of the request for continued examination) is premature. Accordingly, it is appropriate to dismiss as premature such a request.

Rather than file a request for reconsideration of patent term adjustment under 37 CFR 1.705(b) contesting the 37 CFR 1.702(b) calculation at the time of the mailing of the notice of allowance, applicant is advised that they may wait until the time of the issuance of the patent and file a request for reconsideration of the patent term adjustment pursuant to 37 CFR 1.705(d). As the USPTO does not calculate the amount of time earned pursuant to 37 CFR 1.702(b) until the time of the issuance of the patent, the Office will consider any request for reconsideration of the patent term adjustment due to an error in the calculation of 37 CFR 1.702(b) to be timely if the request for reconsideration is filed within two months of the issuance of the patent. However, as to all other bases for contesting the initial determination of patent term adjustment received with the notice of allowance, applicant must timely file an application for patent term adjustment prior to the payment of the issue fee[1].

The Office acknowledges submission of the $200.00 fee set forth in 37 CFR 1.18(e) for consideration of the application for patent term adjustment under 37 CFR 1.705(b).

Any request for reconsideration of the patent term adjustment indicated on the patent must be timely filed within 2 months after issuance pursuant to 37 CFR 1.705(d) and must include payment of the required fee under 37 CFR 1.18(e).

The Office of Data Management has been advised of this decision. This application is being referred to the Office of Data Management for issuance of the patent.

Telephone inquiries specific to this decision should be directed to Attorney Derek Woods at (571) 272-3232.

/ALESIA M. BROWN/

Alesia Brown
Senior Petitions Attorney
Office of Petitions
Office of the Deputy Commissioner
for Patent Examination Policy

---

[1] For example, if applicant disputes both the calculation of patent term adjustment under 37 CFR 1.702(a)(1) for Office failure to mail a first Office action or notice of allowance not later than fourteen months after the date on which the application was filed and under 37 CFR 1.702(b) for Office failure to issue a patent within three years of the actual filing date of the application, then applicant must still timely file an application for patent term adjustment prior to the payment of the issue fee to contest the calculation of Office delay in issuing a first Office action or notice of allowance. See 37 CFR 1.705(b) and 35 U.S.C. 154(b)(3)(B). A dispute as to the calculation of the §1.702(a)(1) period raised on request for reconsideration of patent term adjustment under 37 CFR 1.705(d) will be dismissed as untimely filed.

UNITED STATES PATENT AND TRADEMARK OFFICE

UNITED STATES DEPARTMENT OF COMMERCE
United States Patent and Trademark Office
Address: COMMISSIONER FOR PATENTS
P.O. Box 1450
Alexandria, Virginia 22313-1450
www.uspto.gov

SUTHERLAND II
SUTHERLAND, ASBILL & BRENNAN, LLC
999 PEACHTREE STREET
ATLANTA, GA 30309

Mail Date: 04/21/2010

Applicant	: Michele Pierdinock	: DECISION ON REQUEST FOR
Patent Number	: 7636686	: RECALCULATION of PATENT
Issue Date	: 12/22/2009	: TERM ADJUSTMENT IN VIEW
Appliction No	: 11/146,015	: OF WYETH AND NOTICE OF INTENT TO
Filed	: 06/07/2005	: ISSUE CERTIFICATE OF CORRECTION
		:

The Request for Recalculation is **GRANTED** to the extent indicated.

The patent term adjustment has been determined to be **696** days. The USPTO will *sua sponte* issue a certificate of correction reflecting the amount of PTA days determined by the recalculation.

Prior to the issuance of the certificate of correction, the USPTO will afford patentee an opportunity to be heard and request reconsideration. Accordingly, patentee has **one month or thirty (30) days**, whichever is longer, to file a request for reconsideration of this patent term adjustment calculation. See 35 U.S.C. 154(b)(3)(B)(ii) and 37 CFR 1.322(a)(4). No extensions of time will be granted under 37 CFR 1.136.

Patentee should use document code PET.OP if electronically filing a request for reconsideration of this patent term adjustment calculation. The patentee must also include the information required by 37 CFR 1.705(b)(2) and the fee required by 37 CFR 1.18(e). If patentee does not file a timely request for reconsideration of this patent term adjustment calculation including the information required by 37 CFR 1.705(b)(2) and the fee required by 37 CFR 1.18(e), the USPTO will issue a certificate of correction reflecting the PTA determination noted above.

Patentee should be aware that in order to preserve the right to review in the United States District Court for the District of Columbia of the USPTO patent term adjustment determination, patentee must ensure that he or she also take the steps required under 35 U.S.C. 154(b)(4)(A) in a timely manner. Nothing in the request for recalculation should be construed as providing an alternative time frame for commencing a civil action under 35 U.S.C. 154(b)(4)(A).

Any questions concerning this decision should be directed to the Office of Patent Legal Administration at 571-272-7702.

UNITED STATES PATENT AND TRADEMARK OFFICE

UNITED STATES DEPARTMENT OF COMMERCE
United States Patent and Trademark Office
Address: COMMISSIONER FOR PATENTS
P.O. Box 1450
Alexandria, Virginia 22313-1450
www.uspto.gov

SUTHERLAND II
SUTHERLAND, ASBILL & BRENNAN, LLC
999 PEACHTREE STREET
ATLANTA, GA 30309

Mail Date: 05/18/2010

Applicant : Michele Pierdinock
Patent Number : 7636686
Issue Date : 12/22/2009
Application No : 11/146,015
Filed : 06/07/2005

: NOTICE CONCERNING IMPROPER
: CALCULATION OF PATENT TERM
: ADJUSTMENT BASED UPON USPTO
: IMPROPERLY MEASURING REDUCTION
: PERIOD UNDER 37 CFR 1.704(c)(10).

The United States Patent and Trademark Office (USPTO) discovered that in processing the recent recalculation decisions mailed in response to patentee's filed Request for Recalculation of Patent Term Adjustment in view of Wyeth, the USPTO improperly measured the reduction period for reductions under 37 CFR 1.704(c)(10). Pursuant to 37 CFR 1.704(c)(10), patentee's reduction begins on the date of filing the amendment under 37 CFR 1.312 ("1.312 amendment") or other related paper and ends on the date that the Office mails a response to the filing of the 1.312 amendment or other paper. It has been discovered that during the recalculation, the calculation failed to the limit the reduction to the mail date of the response to the 1.312 amendment or other paper. Accordingly, patentee's reductions were greater than warranted.

This notice **VACATES** the previous GRANTED request for recalculation and provides patentee with a revised GRANTED recalculation.

The patent term adjustment has been determined to be **764** days. The USPTO will *sua sponte* issue a certificate of correction reflecting the amount of patent term adjustment (PTA) days determined by the recalculation.

Prior to the issuance of the certificate of correction, the USPTO will afford patentee an opportunity to be heard and request reconsideration. Accordingly, patentee has **one month or thirty (30) days** from the mail date of this notice, whichever is longer, to file a request for reconsideration of this PTA calculation. See 35 U.S.C. § 154(b)(3)(B)(ii) and 37 CFR 1.322(a)(4).

Patentee should use document code PET.OP if electronically filing a request for reconsideration of this PTA calculation. The patentee must also include the information required by 37 CFR 1.705(b)(2), and the fee required by 37 CFR 1.18(e). If patentee does not file a timely request for reconsideration of this PTA calculation, including the information required by 37 CFR 1.705(b)(2) and the fee required by 37 CFR 1.18(e), the USPTO will issue a certificate of correction reflecting the PTA determination noted above.

Patentee should be aware that in order to preserve the right of review of the USPTO's PTA determination in the United States District Court for the District of Columbia, patentee must ensure that the steps required under 35 U.S.C. § 154 (b)(4) are taken in a timely manner. Nothing in the request for recalculation should be construed as providing an alternative time frame for commencing a civil action under 35 U.S.C. § 154(b)(4).

UNITED STATES PATENT AND TRADEMARK OFFICE

Commissioner for Patents
United States Patent and Trademark Office
P.O. Box 1450
Alexandria, VA 22313-1450
www.uspto.gov

FITZPATRICK CELLA HARPER & SCINTO
30 ROCKEFELLER PLAZA
NEW YORK, NY 10112

COPY MAILED

OCT 04 2007

OFFICE OF PETITIONS

In re Patent No. 7,095,755	:	
Issue Date: August 22, 2006	:	
Application No. 11/146,053	:	ON PETITION
Filed: June 7, 2005	:	
Attorney Docket No. 00862.002794.2	:	

This is a decision on the petition filed January 22, 2007, which is being treated as a petition under 37 CFR 3.81(b)[1] to add assignee's names on the front page of the above-identified patent by way of a Certificate of Correction.

The petition is **granted.**

Telephone inquiries concerning this matter may be directed to the undersigned at (571) 272-3210. Any questions concerning the issuance of the Certificate of Correction should be directed to the Certificates of Correction Branch at (703) 305-8309.

This application is being forwarded to the Certificates of Correction Branch for issuance of the requested Certificate of Correction.

Irvin Dingle
Petitions Examiner
Office of Petitions

[1] See Official Gazette of June 22, 2004

UNITED STATES PATENT AND TRADEMARK OFFICE

Commissioner for Patents
United States Patent and Trademark Office
P.O. Box 1450
Alexandria, VA 22313-1450
www.uspto.gov

Hunton & Williams, LLP
Intellectual Property Department
1445 Ross Avenue
Fountain Place - Suite 3700
Dallas, TX 75202-2799

MAILED

MAR 06 2009

OFFICE OF PETITIONS

In re Application of Paul A. Vaughan Application No. 11/146,075 Filed: June 7, 2005 Attorney Docket No. 85689.10	: : : : :	ON PETITION

This is a decision on the petition under 37 CFR 1.137(b), filed January 12, 2009, to revive the above-identified application.

The application became abandoned for failure to file a proper reply to the non-final Office action mailed March 17, 2008. A Notice of Abandonment was mailed on November 26, 2008.

The petition satisfies the requirements of 37 CFR 1.137(b) in that petitioner has supplied (1) the reply in the form of an amendment and terminal disclaimer under 37 CFR 1.321; (2) the petition fee of $810; and (3) a proper statement of unintentional delay. Therefore, the petition is **GRANTED**.

The file does not indicate a change of address has been submitted, although the address given on the petition differs from the address of record. If appropriate, a change of address should be filed in accordance with MPEP 601.03. A courtesy copy of this decision is being mailed to the address given on the petition; however, the Office will mail all future correspondence solely to the address of record.

This application file is being referred to Technology Center Art Unit 3733 for appropriate action by the Examiner in the normal course of business on the amendment filed with the present petition.

Telephone inquiries concerning this decision should be directed to the undersigned at (571) 272-3226.

Andrea Smith
Petitions Examiner
Office of Petitions

cc: Thomas E. Anderson
Hunton & Williams, LLP
1900 K Street, NW
Washington, DC 20006-1109

UNITED STATES PATENT AND TRADEMARK OFFICE

Commissioner for Patents
United States Patent and Trademark Office
P.O. Box 1450
Alexandria, VA 22313-1450
www.uspto.gov

Hunton & Williams, LLP
Intellectual Property Department
1445 Ross Avenue
Fountain Place - Suite 3700
Dallas, TX 75202-2799

COPY MAILED

DEC 1 0 2009

OFFICE OF PETITIONS

In re Application of :
Paul A. Vaughan :
Application No. 11/146,075 : ON PETITION
Filed: June 7, 2005 :
Attorney Docket No. 85689.10 :

This is a decision on the petition under 37 CFR 1.137(b), filed October 29, 2009, to revive the above-identified application.

The application became abandoned for failure to file a reply to the Notice of Allowance and Fee(s) Due mailed on July 15, 2009.

The petition satisfies the requirements of 37 CFR 1.137(b) in that petitioner has supplied (1) the reply in the form of $755 for payment of the issue fee and $300 for payment of the publication fee; (2) the petition fee of $810; and (3) a proper statement of unintentional delay. Therefore, the petition is **GRANTED**.

It is noted that the address given in the present petition differs from the correspondence address of record. If appropriate, a change of correspondence address should be filed. A courtesy copy of this decision is being mailed to petitioner. Thereafter, all future correspondence will be mailed to the address of record until otherwise instructed.

This application file is being referred to the Office of Data Management for further processing into a patent.

Telephone inquiries concerning this decision should be directed to the undersigned at (571) 272-3226.

Andrea Smith
Petitions Examiner
Office of Petitions

cc: Thomas E. Anderson
Hunton & Williams, LLP
1900 K Street, NW
Washington, DC 20006-1109

UNITED STATES PATENT AND TRADEMARK OFFICE

UNITED STATES DEPARTMENT OF COMMERCE
United States Patent and Trademark Office
Address: COMMISSIONER FOR PATENTS
P.O. Box 1450
Alexandria, Virginia 22313-1450
www.uspto.gov

HUNTON & WILLIAMS LLP
INTELLECTUAL PROPERTY DEPARTMENT
1445 Ross Avenue
Fountain Place - Suite 3700
DALLAS, TX 75202-2799

Mail Date: 05/25/2010

Applicant	: Paul A. Vaughan	: DECISION ON REQUEST FOR
Patent Number	: 7645280	: RECALCULATION of PATENT
Issue Date	: 01/12/2010	: TERM ADJUSTMENT IN VIEW
Application No	: 11/146,075	: OF WYETH AND NOTICE OF INTENT TO
Filed	: 06/07/2005	: ISSUE CERTIFICATE OF CORRECTION
		:

The Request for Recalculation is **GRANTED** to the extent indicated.

The patent term adjustment has been determined to be **905** days. The USPTO will *sua sponte* issue a certificate of correction reflecting the amount of PTA days determined by the recalculation.

Prior to the issuance of the certificate of correction, the USPTO will afford patentee an opportunity to be heard and request reconsideration. Accordingly, patentee has **one month or thirty (30) days**, whichever is longer, to file a request for reconsideration of this patent term adjustment calculation. See 35 U.S.C. 154(b)(3)(B)(ii) and 37 CFR 1.322(a)(4). No extensions of time will be granted under 37 CFR 1.136.

Patentee should use document code PET.OP if electronically filing a request for reconsideration of this patent term adjustment calculation. The patentee must also include the information required by 37 CFR 1.705(b)(2) and the fee required by 37 CFR 1.18(e). If patentee does not file a timely request for reconsideration of this patent term adjustment calculation including the information required by 37 CFR 1.705(b)(2) and the fee required by 37 CFR 1.18(e), the USPTO will issue a certificate of correction reflecting the PTA determination noted above.

Patentee should be aware that in order to preserve the right to review in the United States District Court for the District of Columbia of the USPTO patent term adjustment determination, patentee must ensure that he or she also take the steps required under 35 U.S.C. 154(b)(4)(A) in a timely manner. Nothing in the request for recalculation should be construed as providing an alternative time frame for commencing a civil action under 35 U.S.C. 154(b)(4)(A).

Any questions concerning this decision should be directed to the Office of Patent Legal Administration at 571-272-7702.

UNITED STATES PATENT AND TRADEMARK OFFICE

COMMISSIONER FOR PATENTS
UNITED STATES PATENT AND TRADEMARK OFFICE
P.O. BOX 1450
ALEXANDRIA, VA 22313-1450
www.uspto.gov

FINNEGAN, HENDERSON, FARABOW,
GARRETT & DUNNER LLP
901 NEW YORK AVENUE, NW
WASHINGTON DC 20001-4413

COPY MAILED

SEP 12 2008

OFFICE OF PETITIONS

In re Application of	:	
Fleer et al.	:	DECISION ON APPLICATION
Application No. 11/146,077	:	FOR
Filed: June 7, 2005	:	PATENT TERM ADJUSTMENT
Atty. Dkt. No. 6832.0004-13	:	

This is a decision on the "APPLICATION FOR PATENT TERM ADJUSTMENT—PRE-GRANT," filed on April 18, 2008. Applicants request that the initial determination of patent term adjustment be corrected from one hundred thirty-five (135) days to one hundred eighty-five (185) days.

The application for patent term adjustment is **GRANTED**.

The Office has updated the PAIR screen to reflect that the correct Patent Term Adjustment (PTA) determination at the time of the mailing of the Notice of Allowance is ONE HUNDRED EIGHTY-FIVE (185) days. A copy of the updated PAIR screen, showing the correct determination, is enclosed.

On January 23, 2008, the Office mailed the Determination of Patent Term Adjustment under 35 U.S.C. 154(b) in the above-identified application. The Notice stated that the patent term adjustment to date is 135 days. The instant application for patent term adjustment was timely filed[1] on or before payment of the issue fee. Applicants assert entitlement to additional patent term adjustment for office delay because the Office action mailed on January 17, 2007 was subsequently vacated, and a new Office action was mailed on March 8, 2007.

[1] PALM records indicate that the issue fee was paid on April 18, 2008.

Applicants state that the subject application is not subject to a terminal disclaimer.

Upon review, applicants' assertion is correct. Since the Office action mailed on January 17, 2007, was vacated, and a new Office action was mailed on March 8, 2007, the period of adjustment under 35 U.S.C. § 154(b)(1)(A)(i) and 37 CFR 1.703(a)(1) is the period beginning the day after the date that is 14 months after the date the application was filed, August 8, 2006, and ending on the date of mailing of the Office action mailed on March 8, 2007, or 213 days. Using the March 8, 2007, the period of adjustment is corrected from 163 days to 213 days.

In view thereof, the correct determination of patent term adjustment at the time of the mailing of the notice of allowance is ONE HUNDRED EIGHTY-FIVE (185) days (213 days of PTO delay, reduced by 28 days of Applicant delay).

The Office acknowledges submission of the $200.00 fee set forth in 37 CFR 1.18(e). No additional fees are required.

The Office of Patent Publication has been advised of this decision. The application is thereby forwarded to the Office of Patent Publication for issuance of the patent. The patent term adjustment indicated on the patent (as shown on the Issue Notification mailed about three weeks prior to patent issuance) will include any additional adjustment accrued both for Office delay in issuing the patent more than four months after payment of the issue fee and satisfaction of all outstanding requirements, and if applicable, for the Office taking in excess of three years to issue the patent (to the extent that the three-year period does not overlap with periods already accorded).

Telephone inquiries regarding this matter should be directed to Senior Petitions Attorney Douglas I. Wood at (571) 272-3231.

Nancy Johnson

Nancy Johnson
Senior Petitions Attorney
Office of Petitions

Encl: Revised PALM Calculation

Day : Saturday
Date: 8/30/2008

PALM INTRANET

Time: 16:58:43

PTA Calculations for Application: 11/146077			
Application Filing Date:	**06/07/2005**	PTO Delay (PTO):	**163**
Issue Date of Patent:		Three Years:	**0**
Pre-Issue Petitions:	**0**	Applicant Delay (APPL):	**28**
Post-Issue Petitions:	**0**	Total PTA (days):	**185**
PTO Delay Adjustment:	**50**		

File Contents History

Number	Date	Contents Description	PTO	APPL	START
56	08/30/2008	ADJUSTMENT OF PTA CALCULATION BY PTO		163	
55	08/30/2008	ADJUSTMENT OF PTA CALCULATION BY PTO	213		
40	01/23/2008	MAIL NOTICE OF ALLOWANCE			
39	01/23/2008	ISSUE REVISION COMPLETED			
38	01/23/2008	DOCUMENT VERIFICATION			
37	01/23/2008	NOTICE OF ALLOWANCE DATA VERIFICATION COMPLETED			
36	01/23/2008	CASE DOCKETED TO EXAMINER IN GAU			
35	01/22/2008	NOTICE OF ALLOWABILITY			
31	01/02/2008	DATE FORWARDED TO EXAMINER			
30	12/20/2007	AMENDMENT AFTER FINAL REJECTION		28	28
29	12/20/2007	REQUEST FOR EXTENSION OF TIME - GRANTED			
28	08/22/2007	MAIL FINAL REJECTION (PTOL - 326)			
27	08/20/2007	FINAL REJECTION			
26	06/06/2007	INFORMATION DISCLOSURE STATEMENT CONSIDERED			
25	06/06/2007	INFORMATION DISCLOSURE STATEMENT (IDS) FILED		0	23
24	06/11/2007	DATE FORWARDED TO EXAMINER			
23	06/06/2007	RESPONSE AFTER NON-FINAL ACTION			
22	06/06/2007	INFORMATION DISCLOSURE STATEMENT (IDS) FILED			
21	03/08/2007	MAIL NOTICE OF WITHDRAWN ACTION			
20	03/08/2007	MAIL NON-FINAL REJECTION			
19	03/05/2007	NON-FINAL REJECTION			
18	03/05/2007	LETTER WITHDRAWING / VACATING OFFICE ACTION			

17	01/17/2007	MAIL RESTRICTION REQUIREMENT	163		-1
16	01/08/2007	REQUIREMENT FOR RESTRICTION / ELECTION			
15	01/05/2006	CASE DOCKETED TO EXAMINER IN GAU			
14	12/23/2005	IFW TSS PROCESSING BY TECH CENTER COMPLETE			
13	12/23/2005	CASE DOCKETED TO EXAMINER IN GAU			
12.7	07/29/2005	INFORMATION DISCLOSURE STATEMENT (IDS) FILED			
12	07/29/2005	INFORMATION DISCLOSURE STATEMENT (IDS) FILED			
11	06/07/2005	REFERENCE CAPTURE ON IDS			
10.7	06/07/2005	INFORMATION DISCLOSURE STATEMENT (IDS) FILED			
10	06/07/2005	INFORMATION DISCLOSURE STATEMENT (IDS) FILED			
9	06/07/2005	PRELIMINARY AMENDMENT			
8	07/18/2005	APPLICATION DISPATCHED FROM OIPE			
7	07/18/2005	APPLICATION IS NOW COMPLETE			
6	07/12/2005	CLEARED BY L&R (LARS)			
5	06/20/2005	REFERRED TO LEVEL 2 (LARS) BY OIPE CSR			
4	06/19/2005	CRF IS GOOD TECHNICALLY / ENTERED INTO DATABASE			
3	06/15/2005	IFW SCAN & PACR AUTO SECURITY REVIEW			
2	06/07/2005	CRF DISK HAS BEEN RECEIVED BY PREEXAM / GROUP / PCT			
1	06/07/2005	INITIAL EXAM TEAM NN			

Search Another: Application# Search

EXPLANATION OF PTA CALCULATION

EXPLANATION OF PTE CALCULATION

To go back, right click here and select Back. To go forward, right click here and select Forward. To refresh, right click here and select Refresh.

Back to OASIS | Home page

UNITED STATES PATENT AND TRADEMARK OFFICE

Commissioner for Patents
United States Patent and Trademark Office
P.O. Box 1450
Alexandria, VA 22313-1450
www.uspto.gov

FINNEGAN, HENDERSON,
FARABOW, GARRETT & DUNNER
LLP
901 NEW YORK AVENUE, NW
WASHINGTON DC 20001-4413

COPY MAILED

JUL 06 2009

OFFICE OF PETITIONS

In re Patent No. 7,435,410	:	
Fleer et al.	:	DECISION ON
Issue Date: October 14, 2008	:	REQUEST FOR
Application No. 11/146,077	:	RECONSIDERATION OF
Filed: June 7, 2005	:	PATENT TERM ADJUSTMENT
Attorney Docket No. 6832.0004-13	:	

This is a decision on the "APPLICATION FOR PATENT TERM ADJUSTMENT - POST GRANT," filed on November 24, 2008, requesting that the patent term adjustment determination for the above-identified patent be changed from one hundred twenty-two (122) days to one hundred ninety-four (194) days.

The request for reconsideration of patent term adjustment is **DISMISSED**.

On October 14, 2008, the above-identified application matured into US Patent No. 7,435,410 with a patent term adjustment of 122 days. This request for reconsideration of patent term adjustment was timely filed within two months of the issue date of the patent. See 37 C.F.R. § 1.705(d).

The Office acknowledges submission of the $200.00 fee set forth in 37 CFR 1.18(e). No additional fees are required.

Patentees request recalculation of the patent term adjustment to include an 72-day period of adjustment pursuant to 37 C.F.R. §1.703(b). Patentees maintain entitlement to a period of adjustment due to the Three Year Delay by the Office, pursuant to 37 CFR § 1.703(b), of 72 days and the period of adjustment

due to other examination delay, pursuant to 37 CFR § 1.702(a), of 270 days.

The 72-day period is calculated based on the application having been filed under 35 U.S.C. § 111(a) on June 7, 2005, and the application having issued as a patent on October 14, 2008, three years and 129 days later. Patentees state that the 129 days overlaps with the 57 day period of adjustment for examination delay for issuance of the patent four (4) months and 57 days after the payment of the issue fee on April 18, 2008, pursuant to 37 CFR 1.702(a)(4), resulting in a non-overlapping period of 72 days. Patentees assert that in addition to this 72 day period, they are entitled to a period of adjustment due to examination delay, pursuant to 37 CFR § 1.702(a), of 213 days for the failure by the Office to mail at least one of a notification under 35 U.S.C. 132 not later than fourteen months after the date on which the application was filed under 35 U.S.C. 111(a), pursuant to § 1.702(a)(1), and of 57 days for the failure by the Office to issue a patent not later than four months after the date on which the issue fee was paid under 35 U.S.C. 151, pursuant to § 1.702(a)(4). A first Office action (restriction requirement) was mailed on January 17, 2007, 14 months and 213 days after the application was filed on June 7, 2005; and a period of adjustment of 57 days for the failure of the Office to issue the patent not later than four (4) months after the date on which the issue fee was paid. On April 18, 2008, the issue fee was paid. On October 14, 2008, four (4) months and 57 days after the date on which the issue fee was paid, the patent issued.

Under 37 CFR § 1.703(f), Patentees are entitled to a period of patent term adjustment equal to the period of delays based on the grounds set forth in 37 CFR § 1.702 reduced by the period of time equal to the period of time during which Patentees failed to engage in reasonable efforts to conclude prosecution pursuant to 37 CFR § 1.704. In other words, the period of Office delay reduced by the period of applicant delay.

Patentees do not dispute the total applicant delay calculation of 148 days. This calculation is as follows: a period of 28 days for the filing of a reply on December 20, 2007, three (3) months and 28 days after the mailing of a final Office action on August 22, 2007; a period of 120 days from the filing of an amendment after allowance on March 21, 2008, to the mailing of a

response to the amendment after allowance 120 days later on July 21, 2008.

Patentees do not dispute that the total period of Office delay is the sum of the period of Three Years Delay (129 days) and the period of Examination Delay (270 days) to the extent that these periods of delay are not overlapping. Patentees contend that 57 days of the Three Year Delay period overlaps with the period of examination delay to the extent that the Office failed to issue the patent within four (4) months and 57 days of the date the issue fee was paid.

As such, Patentees assert entitlement to a patent term of adjustment of 194 days (129 + 270 reduced by 57 overlap - 148 (applicant delay)).

The Office agrees that as of the issuance as a patent, the application was pending three years and 129 days after its filing date. The Office agrees that the action detailed above was not taken within the specified time frame, and thus, the entry of a period of adjustment of 129 days is correct. At issue is whether Patentees should accrue 129 (reduced by 57 days of overlap) days of patent term adjustment for the Office taking in excess of three years to issue the patent, as well as 220 days for Office failure to take a certain action within a specified time frame (or examination delay).

The Office contends that all of the 129 day period for failure of the Office to issue a patent within three years overlaps with the 270 day period of examination delay. Patentees' calculation of the period of overlap is inconsistent with the Office's interpretation of this provision. 35 U.S.C. 154(b)(2)(A) limits the adjustment of patent term, as follows:

> to the extent that the periods of delay attributable to grounds specified in paragraph (1) overlap, the period of any adjustment granted under this subsection shall not exceed the actual number of days the issuance of the patent was delayed.

Likewise, 37 CFR 1.703(f) provides that:

> To the extent that periods of delay attributable to the grounds specified in §1.702 overlap, the period of

> adjustment granted under this section shall not exceed the actual number of days the issuance of the patent was delayed.

As explained in *Explanation of 37 CFR 1.703(f) and of the United States Patent and Trademark Office Interpretation of 35 U.S.C. 154(b)(2)(A)*, 69 Fed. Reg. 34283 (June 21, 2004), the Office interprets 35 U.S.C. 154(b)(2)(A) as permitting either patent term adjustment under 35 U.S.C. 154(b)(1)(A)(i)-(iv), or patent term adjustment under 35 U.S.C. 154(b)(1)(B), but not as permitting patent term adjustment under both 35 U.S.C. 154(b)(1)(A)(i)-(iv) and 154(b)(1)(B). Accordingly, the Office implements the overlap provision as follows:

> If an application is entitled to an adjustment under 35 U.S.C. 154(b)(1)(B), the entire period during which the application was pending (except for periods excluded under 35 U.S.C. 154(b)(1)(B)(i)-(iii)), and not just the period beginning three years after the actual filing date of the application, is the period of delay under 35 U.S.C. 154(b)(1)(B) in determining whether periods of delay overlap under 35 U.S.C. 154(b)(2)(A). Thus, any days of delay for Office issuance of the patent more than 3 years after the filing date of the application, which overlap with the days of patent term adjustment accorded prior to the issuance of the patent will not result in any additional patent term adjustment. See 35 U.S.C. 154(b)(1)(B), 35 U.S.C. 154(b)(2)(A), and 37 CFR § 1.703(f). See *Changes to Implement Patent Term Adjustment Under Twenty Year Term; Final Rule*, 65 Fed. Reg. 54366 (Sept. 18, 2000). See also *Revision of Patent Term Extension and Patent Term Adjustment Provisions; Final Rule*, 69 Fed. Reg. 21704 (April 22, 2004), 1282 Off. Gaz. Pat. Office 100 (May 18, 2004). See also *Explanation of 37 CFR 1.703(f) and of the United States Patent and Trademark Office Interpretation of 35 U.S.C. 154(b)(2)(A)*, 69 Fed. Reg. 34283 (June 21, 2004).

The current wording of § 1.703(f) was revised in response to the misinterpretation of this provision by a number of Patentees. The rule was slightly revised to more closely track the corresponding language of 35 U.S.C. 154(b)(2)(A). The relevant portion differs only to the extent that the statute refers back to provisions of the statute whereas the rule refers back to

sections of the rule. This was not a substantive change to the rule nor did it reflect a change of the Office's interpretation of 35 U.S.C. 154(b)(2)(A). As stated in the *Explanation of 37 CFR 1.703(f) and of the United States Patent and Trademark Office Interpretation of 35 U.S.C. 154(b)(2)(A)*, the Office has consistently taken the position that if an application is entitled to an adjustment under the three-year pendency provision of 35 U.S.C. 154(b)(1)(B), the entire period during which the application was pending before the Office (except for periods excluded under 35 U.S.C. 154(b)(1)(B)(i)-(iii)), and not just the period beginning three years after the actual filing date of the application, is the relevant period under 35 U.S.C. 154(b)(1)(B) in determining whether periods of delay "overlap" under 35 U.S.C. 154(b)(2)(A).

This interpretation is consistent with the statute. Taken together the statute and rule provide that to the extent that periods of delay attributable to grounds specified in 35 U.S.C. 154(b)(1) and in corresponding §1.702 overlap, the period of adjustment granted shall not exceed the actual number of days the issuance of the patent was delayed. The grounds specified in these sections cover the A) guarantee of prompt Patent and Trademark Office responses, B) guarantee of no more than 3 year application pendency, and C) guarantee or adjustments for delays due to interference, secrecy orders and appeals. A section by section analysis of 35 U.S.C. 154(b)(2)(A) specifically provides that:

> Section 4402 imposes limitations on restoration of term. In general, pursuant to [35 U.S.C.] 154(b)(2)(A)-(C), total adjustments granted for restorations under [35 U.S.C. 154](b)(1) are reduced as follows: (1) To the extent that there are multiple grounds for extending the term of a patent that may exist simultaneously (e.g., delay due to a secrecy order under [35 U.S.C.] 181 and administrative delay under [35 U.S.C.] 154(b)(1)(A)), the term should not be extended for each ground of delay but only for the actual number of days that the issuance of a patent was delayed; See 145 Cong. Rec. S14,718[1]

[1] The AIPA is title IV of the Intellectual Property and Communications Omnibus Reform Act of 1999 (S. 1948), which was incorporated and enacted as law as part of Pub. L. 106-113. The Conference Report for H.R. 3194, 106th Cong. 1st Sess. (1999), which resulted in Pub. L. 106-113, does not contain any discussion (other than the incorporated language) of S. 1948. A section-by-section analysis of S. 1948, however, was printed in the Congressional Record at the request of Senator Lott, See 145 Cong. Rec. S14,708-26 (1999)(daily ed. Nov. 17, 1999).

As such, the period for over 3 year pendency does not overlap only to the extent that the actual dates in the period beginning three years after the date on which the application was filed overlap with the actual dates in the periods for failure of the Office to take action within specified time frames. In other words, consideration of the overlap does not begin three years after the filing date of the application. Treating the relevant period as starting on June 7, 2008, the date that is 3 years after the actual filing date of the application, is incorrect.

In this instance, the relevant period under 35 U.S.C. 154(b)(1)(B) in determining whether periods of delay "overlap" under 35 U.S.C. 154(b)(2)(A) is the entire period during which the application was pending before the Office, June 7, 2005, as terminated by issuance of U.S. Patent No. 7,435,410 on October 14, 2008. 270 days of patent term adjustment were accorded prior to the issuance of the patent for the Office failing to respond within a specified time frame. The patent issued three (3) years and 129 days after the date the application was filed. All of the 129 days for Office delay in issuing the patent overlapped with the 270 days accorded during the pendency of the application.

Accordingly, at issuance, the Office properly entered no (0) additional days of patent term adjustment for the Office taking in excess of 3 years to issue the patent.

In view thereof, no adjustment to the patent term will be made.

Telephone inquiries specific to this matter should be directed to Senior Petitions Attorney Douglas I. Wood, at (571) 272-3231.

Nancy Johnson
Senior Petitions Attorney
Office of Petitions

UNITED STATES PATENT AND TRADEMARK OFFICE

Commissioner for Patents
United States Patent and Trademark Office
P.O. Box 1450
Alexandria, VA 22313-1450
www.uspto.gov

RADER FISHMAN & GRAUER PLLC
LION BUILDING
1233 20TH STREET NW, SUITE 501
WASHINGTON, DC 20036

COPY MAILED

DEC 0 8 2008

OFFICE OF PETITIONS

In re Application of	:	
NOMOTO, Kazutoshi	:	
Application No. 11/146,084	:	DECISION GRANTING PETITION
Filed: June 7, 2005	:	UNDER 37 CFR 1.313(c)(2)
Attorney Docket No. **SON-3320**	:	

This is a decision on the petition under 37 CFR 1.313(c)(2), filed December 3, 2008, to withdraw the above-identified application from issue after payment of the issue fee.

The petition is **GRANTED**.

The above-identified application is withdrawn from issue for consideration of a submission under 37 CFR 1.114 (request for continued examination). *See* 37 CFR 1.313(c)(2).

Petitioner is advised that the issue fee paid on November 20, 2008 cannot be refunded. If, however, this application is again allowed, petitioner may request that it be applied towards the issue fee required by the new Notice of Allowance.[1]

Telephone inquiries should be directed to the undersigned at (571) 272-7253.

This application is being referred to Technology Center AU 2836 for processing of the request for continued examination under 37 CFR 1.114 and for consideration of the concurrently filed information disclosure statement.

/Monica A. Graves/
Petitions Examiner
Office of Petitions

---

[1] *The request to apply the issue fee to the new Notice may be satisfied by completing and returning the new Part B – Fee(s) Transmittal Form (along with any balance due at the time of submission). Petitioner is advised that the Issue Fee Transmittal Form* ***must*** *be completed and timely submitted to avoid abandonment of the application.*

SPE RESPONSE FOR CERTIFICATE OF CORRECTION

Paper No.: _____

DATE : 11-11-07

TO SPE OF : **Technology Center** 2189

SUBJECT : Request for Certificate of Correction on Patent No.: 11/146114 7281098 B2

A response is requested with respect to the accompanying request for a certificate of correction.

Please complete this form and return with file, within 7 days to:
Palm location **7580, Certificates of Correction Branch – South Tower – 9A22**
If response is for an IFW, **return to employee (named below) via PUBSCofC Team in MADRAS.**
With respect to the change(s) requested, correcting Office and/or Applicant's errors, should the patent read as shown in the certificate of correction (COCIN)? No new matter should be introduced, nor should the scope or meaning of the claims be changed.

Thank You For Your Assistance

Elisha Evans
Certificates of Correction Branch
Tel. No. 703-308-9390 EXT 110

The request for issuing the above-identified correction(s) is hereby:
Note your decision on the appropriate box.

- [x] **Approved** — **All** changes apply.
- [ ] **Approved in Part** — Specify below which changes **do not** apply.
- [ ] **Denied** — State the reasons for denial below.

Comments:

DONALD SPARKS
SUPERVISORY PATENT EXAMINER

SPE

2189
Art Unit

UNITED STATES PATENT AND TRADEMARK OFFICE

Commissioner for Patents
United States Patent and Trademark Office
P.O. Box 1450
Alexandria, VA 22313-1450
www.uspto.gov

REED SMITH LLP
Suite 1400
3110 Fairview Park Drive
Falls Church VA 22042

COPY MAILED

AUG 17 2007

OFFICE OF PETITIONS

In re Patent No. 7,196,953	:	
Issue Date: 03/27/2007	:	
Application No. 11/146,119	:	ON PETITION
Filed: 06/07/2005	:	
Attorney Docket No. HITA.0700	:	

This is a decision on the petition filed April 18, 2007, which is being treated as a request under 37 CFR 3.81(b)[1] to correct the name of the assignee on the front page of the above-identified patent by way of a Certificate of Correction.

The request is **GRANTED**.

Telephone inquiries concerning this decision may be directed to the undersigned at (571) 272-3211. Inquiries regarding the issuance of a certificate of correction should be directed to the Certificate of Correction Branch at (571) 272-4200.

The Certificates of Correction Branch will be notified of this decision granting the petition under 37 CFR 3.81(b) and directing issuance of the requested Certificate of Correction.

C. T. Donnell

Christina Tartera Donnell
Senior Petitions Attorney
Office of Petitions

[1] *See* MPEP 1309, subsection II; and Official Gazette of June 22, 2004.

UNITED STATES PATENT AND TRADEMARK OFFICE

UNITED STATES DEPARTMENT OF COMMERCE
United States Patent and Trademark Office
Address: COMMISSIONER FOR PATENTS
P.O. Box 1450
Alexandria, Virginia 22313-1450
www.uspto.gov

SUGHRUE MION, PLLC
2100 PENNSYLVANIA AVENUE, N.W.
SUITE 800
WASHINGTON, DC 20037

Mail Date: 04/29/2010

Applicant	: Valerie Girardon	: DECISION ON REQUEST FOR
Patent Number	: 7613378	: RECALCULATION of PATENT
Issue Date	: 11/03/2009	: TERM ADJUSTMENT IN VIEW
Application No	: 11/146,123	: OF WYETH AND NOTICE OF INTENT TO
Filed	: 06/07/2005	: ISSUE CERTIFICATE OF CORRECTION
		:

The Request for Recalculation is **GRANTED** to the extent indicated.

The patent term adjustment has been determined to be **0** days. The USPTO will *sua sponte* issue a certificate of correction reflecting the amount of PTA days determined by the recalculation.

Prior to the issuance of the certificate of correction, the USPTO will afford patentee an opportunity to be heard and request reconsideration. Accordingly, patentee has **one month or thirty (30) days**, whichever is longer, to file a request for reconsideration of this patent term adjustment calculation. See 35 U.S.C. 154(b)(3)(B)(ii) and 37 CFR 1.322(a)(4). No extensions of time will be granted under 37 CFR 1.136.

Patentee should use document code PET.OP if electronically filing a request for reconsideration of this patent term adjustment calculation. The patentee must also include the information required by 37 CFR 1.705(b)(2) and the fee required by 37 CFR 1.18(e). If patentee does not file a timely request for reconsideration of this patent term adjustment calculation including the information required by 37 CFR 1.705(b)(2) and the fee required by 37 CFR 1.18(e), the USPTO will issue a certificate of correction reflecting the PTA determination noted above.

Patentee should be aware that in order to preserve the right to review in the United States District Court for the District of Columbia of the USPTO patent term adjustment determination, patentee must ensure that he or she also take the steps required under 35 U.S.C. 154(b)(4)(A) in a timely manner. Nothing in the request for recalculation should be construed as providing an alternative time frame for commencing a civil action under 35 U.S.C. 154(b)(4)(A).

Any questions concerning this decision should be directed to the Office of Patent Legal Administration at 571-272-7702.

UNITED STATES PATENT AND TRADEMARK OFFICE

Commissioner for Patents
United States Patent and Trademark Office
P.O. Box 1450
Alexandria, VA 22313-1450
www.uspto.gov

HUNTON & WILLIAMS LLP
INTELLECTUAL PROPERTY DEPARTMENT
1900 K STREET, N.W.
SUITE 1200
WASHINGTON DC 20006-1109

COPY MAILED

SEP 2 0 2007

OFFICE OF PETITIONS

In re Application of Paul A. Averback Application No. 10/146130 Filing or 371(c) Date: 05/16/2002 For: COMPOSITION FOR PREVENTING CELL DEATH AND/OR TISSUE NECROSIS RESULTING FROM CONTACT WITH NEURAL THREAD PROTEINS	: : : : : : : : :	DECISION ON PETITION

This is a decision on the petition to revive the application under the unintentional provisions of 37 CFR 1.137(b), filed July 12, 2007.

The Petition is **granted**.

The above-identified application became abandoned for failure to file an Appeal Brief after filing a Notice of Appeal. A final Office action was mailed March 10, 2005. Applicant filed and Amendment and a Notice of Appeal on September 12, 2005. The Amendment failed to place the application in condition for allowance. Upon filing the Notice of Appeal, Applicant was given two (2) months within which to file an Appeal Brief. Extensions of time under 3 CFR 1.136(a) were available. Applicant failed to file an Appeal Brief. Since no claims were allowed, the application became abandoned on the date the brief was due: November 12, 2005. See, 37 CFR 41.37 and MPEP 1205.01.

Applicant files the present request for reconsideration and an Appeal Brief. The petition satisfies the conditions for revival pursuant to the provisions of 37 CFR 1.137(b) in that the petition includes (1) the reply in the form of an Appeal Brief; (2) the petition fee; and (3) the required statement of unintentional delay. Accordingly, the reply is accepted as having been unintentionally delayed. Accord MPEP 1215.04.

The application is being referred to Technology Center Art Unit 1649 for processing of the Appeal Brief.

Telephone inquiries concerning this matter should be directed to the undersigned at (571) 272-3232.

Derek L. Woods
Attorney
Office of Petitions

UNITED STATES PATENT AND TRADEMARK OFFICE

UNITED STATES DEPARTMENT OF COMMERCE
United States Patent and Trademark Office
Address: COMMISSIONER FOR PATENTS
P.O. Box 1450
Alexandria, Virginia 22313-1450
www.uspto.gov

H.C. PARK & ASSOCIATES, PLC
8500 LEESBURG PIKE
SUITE 7500
VIENNA, VA 22182

Mail Date: 04/20/2010

Applicant	: Dong-Won Han	: DECISION ON REQUEST FOR
Patent Number	: 7629739	: RECALCULATION of PATENT
Issue Date	: 12/08/2009	: TERM ADJUSTMENT IN VIEW
Appliction No	: 11/146,142	: OF WYETH AND NOTICE OF INTENT TO
Filed	: 06/07/2005	: ISSUE CERTIFICATE OF CORRECTION
		:

The Request for Recalculation is **GRANTED** to the extent indicated.

The patent term adjustment has been determined to be **956** days. The USPTO will *sua sponte* issue a certificate of correction reflecting the amount of PTA days determined by the recalculation.

Prior to the issuance of the certificate of correction, the USPTO will afford patentee an opportunity to be heard and request reconsideration. Accordingly, patentee has **one month or thirty (30) days**, whichever is longer, to file a request for reconsideration of this patent term adjustment calculation. See 35 U.S.C. 154(b)(3)(B)(ii) and 37 CFR 1.322(a)(4). No extensions of time will be granted under 37 CFR 1.136.

Patentee should use document code PET.OP if electronically filing a request for reconsideration of this patent term adjustment calculation. The patentee must also include the information required by 37 CFR 1.705(b)(2) and the fee required by 37 CFR 1.18(e). If patentee does not file a timely request for reconsideration of this patent term adjustment calculation including the information required by 37 CFR 1.705(b)(2) and the fee required by 37 CFR 1.18(e), the USPTO will issue a certificate of correction reflecting the PTA determination noted above.

Patentee should be aware that in order to preserve the right to review in the United States District Court for the District of Columbia of the USPTO patent term adjustment determination, patentee must ensure that he or she also take the steps required under 35 U.S.C. 154(b)(4)(A) in a timely manner. Nothing in the request for recalculation should be construed as providing an alternative time frame for commencing a civil action under 35 U.S.C. 154(b)(4)(A).

Any questions concerning this decision should be directed to the Office of Patent Legal Administration at 571-272-7702.

UNITED STATES PATENT AND TRADEMARK OFFICE

UNITED STATES DEPARTMENT OF COMMERCE
United States Patent and Trademark Office
Address: COMMISSIONER FOR PATENTS
P.O. Box 1450
Alexandria, Virginia 22313-1450
www.uspto.gov

H.C. PARK & ASSOCIATES, PLC
8500 LEESBURG PIKE
SUITE 7500
VIENNA, VA 22182

Mail Date: 05/17/2010

Applicant : Dong-Won Han
Patent Number : 7629739
Issue Date : 12/08/2009
Application No : 11/146,142
Filed : 06/07/2005

: NOTICE CONCERNING IMPROPER
: CALCULATION OF PATENT TERM
: ADJUSTMENT BASED UPON USPTO
: IMPROPERLY MEASURING REDUCTION
: PERIOD UNDER 37 CFR 1.704(c)(10).

The United States Patent and Trademark Office (USPTO) discovered that in processing the recent recalculation decisions mailed in response to patentee's filed Request for Recalculation of Patent Term Adjustment in view of Wyeth, the USPTO improperly measured the reduction period for reductions under 37 CFR 1.704(c)(10). Pursuant to 37 CFR 1.704(c)(10), patentee's reduction begins on the date of filing the amendment under 37 CFR 1.312 ("1.312 amendment") or other related paper and ends on the date that the Office mails a response to the filing of the 1.312 amendment or other paper. It has been discovered that during the recalculation, the calculation failed to the limit the reduction to the mail date of the response to the 1.312 amendment or other paper. Accordingly, patentee's reductions were greater than warranted.

This notice **VACATES** the previous GRANTED request for recalculation and provides patentee with a revised GRANTED recalculation.

The patent term adjustment has been determined to be **1030** days. The USPTO will *sua sponte* issue a certificate of correction reflecting the amount of patent term adjustment (PTA) days determined by the recalculation.

Prior to the issuance of the certificate of correction, the USPTO will afford patentee an opportunity to be heard and request reconsideration. Accordingly, patentee has **one month or thirty (30) days** from the mail date of this notice, whichever is longer, to file a request for reconsideration of this PTA calculation. See 35 U.S.C. § 154(b)(3)(B)(ii) and 37 CFR 1.322(a)(4).

Patentee should use document code PET.OP if electronically filing a request for reconsideration of this PTA calculation. The patentee must also include the information required by 37 CFR 1.705(b)(2), and the fee required by 37 CFR 1.18(e). If patentee does not file a timely request for reconsideration of this PTA calculation, including the information required by 37 CFR 1.705(b)(2) and the fee required by 37 CFR 1.18(e), the USPTO will issue a certificate of correction reflecting the PTA determination noted above.

Patentee should be aware that in order to preserve the right of review of the USPTO's PTA determination in the United States District Court for the District of Columbia, patentee must ensure that the steps required under 35 U.S.C. § 154 (b)(4) are taken in a timely manner. Nothing in the request for recalculation should be construed as providing an alternative time frame for commencing a civil action under 35 U.S.C. § 154(b)(4).

UNITED STATES PATENT AND TRADEMARK OFFICE

Commissioner for Patents
United States Patent and Trademark Office
P.O. Box 1450
Alexandria, VA 22313-1450
www.uspto.gov

GLOBUS MEDICAL, INC.
ATTN: BRIAN MALM
VALLEY FORGE BUSINESS CENTER
2560 GENERAL ARMISTEAD AVENUE
AUDUBON PA 19403

7/30/07

In re Application of:
Iott, Andrew et. al.
Serial No.: 11/146,147
Filed: Feb. Jun. 7, 2005
Docket: 0218.005.0003
Title: POLYAXIAL SCREW

DECISION ON PETITION TO MAKE SPECIAL FOR NEW APPLICATION UNDER 37 C.F.R. § 1.102 & M.P.E.P. § 708.02 (VIII)

This is a decision on the petition filed on June 7, 2005 to make the above-identified application special under the accelerated examination procedure set forth in MPEP § 708.02(VIII) and in accordance with 37 C.F.R. § 1.102(d). The petition fee of $130.00 has been charged to the Deposit Account provided in the petition.

The petition to make the application special is **DISMISSED**.

In support of the petition, petitioner provides: a) the applicable fee to be charged against the deposit account provided; b) a statement that if all claims are not directed to a single invention as determined by the Office, applicant will make an election without traverse; c) a statement that a search to identify the existence of prior art related to the subject matter has been made, including a listing of classes and subclasses identified; d) one IDS filed on June 7, 2005, and one IDS filed August 15, 2006; and e) a detailed discussion of some of the cited references.

For accelerated examination under MPEP § 708.02(VIII) in accordance with 37 C.F.R. § 1.102(d), a showing of the following is required: a) the applicable petition fee; b) all claims are directed to a single invention, or if the Office determines that all the claims presented are not obviously directed to a single invention, applicant will make an election without traverse; c) a statement that a pre-examination search was made, listing the field of search by class and subclass; d) a copy of each of the references deemed most closely related to the claimed subject matter; and e) a detailed discussion of the references pointing out with the particularity required by 37 CFR 1.111 (b) and (c), how the claimed subject matter is distinguishable over the references.

The requirements of MPEP § 708.02(VIII)(a)(b)(c) and (d) are considered to have been met. However, the petition does not meet the requirements of MPEP § 708.02(VIII) (e).

Regarding the requirement of MPEP § 708.02 (VIII)(e), 37 CFR § 1.111(c) states in part "the applicant or patent owner must clearly point out the patentable novelty which he or she thinks the claims present in view of the state of the art disclosed by the references cited or the objections

made." The petition fails to discuss three of the sixteen references cited in the initial IDS filed on June 7, 2005, and fails to discuss any of the references cited in the IDS filed on August 15, 2006. Therefore, there are six references that must be discussed in order to meet the requirements set forth in MPEP § 708.02(VIII)(e).

The applicant provides discussion of thirteen out of nineteen cited references but does not point out the particular language that distinguishes each independent claim. For example, the petitioners claims that Martin '030 "does not teach or disclose a bone fastener and a coupling element comprising coupling body components and a coupling wedge as described and claimed in **some of the claims** of the present invention." The petitioners fail to specify which independent claims the discussion relates to. 37 CFR § 1.111(b) and (c) require detailed discussion of the references pointing out with particularity how the claims subject matter is distinguished over the references present. Each independent claim must be compared with each reference and the patentable novelty in each claim relative to each reference must be clearly described. Because the petition does not point out the specific language in each of the independent claims that distinguishes over each reference, it fails to meet the requirements of MPEP § 708.02(VIII)(e).

While Technology Center Directors may have granted petitions that do not comply with the detailed discussion requirement of the Accelerated Examination procedure, Technology Center Director decisions on petitions are not binding precedent of the Patent Examining Corps, and the application of an improper standard in certain cases does not require the Office to continue to apply the improper standard in all cases. *See* *In re The Boulevard Entertainment, Inc.*, 334 F.3d 1336, 1343, 67 USPQ2d 1475, 1480 (Fed. Cir. 2003).

For the above-mentioned reasons, the petition is dismissed. The application will therefore be taken up by the examiner for action in its regular turn.

Any request for reconsideration of this decision must be submitted within 2 (two) months of the date of this decision in order to be considered timely. Any request for reconsideration must provide a detailed discussion of each of the cited references that clearly points out the specific language in each of the independent claims that distinguishes over each of the references.

Henry C. Yuen
Special Programs Examiner
Technology Center 3700
Tel: 571-272-4856

UNITED STATES PATENT AND TRADEMARK OFFICE

Commissioner for Patents
United States Patent and Trademark Office
P.O. Box 1450
Alexandria, VA 22313-1450
www.uspto.gov

COPY MAILED

AUG 16 2006

OFFICE OF PETITIONS

STAAS & HALSEY LLP
SUITE 700
1201 NEW YORK AVENUE, N.W.
WASHINGTON DC 20005

In re Application of	:	
Hiroshi Miyagawa et al	:	
Application No. 11/146,235	:	ON PETITION
Filed: June 7, 2005	:	
Attorney Docket No. 0300.1186	:	

This is a decision on the petition, filed August 10, 2006, under 37 CFR 1.313(c)(2) to withdraw the above-identified application from issue after payment of the issue fee.

The petition is **GRANTED**.

The above-identified application is withdrawn from issue for consideration of a submission under 37 CFR 1.114 (request for continued examination). See 37 CFR 1.313(c)(2).

Petitioner is advised that the issue fee paid on July 24, 2006, in the above-identified application cannot be refunded. If, however, the above-identified application is again allowed, petitioner may request that it be applied towards the issue fee required by the new Notice of Allowance.[1]

Telephone inquiries should be directed to the undersigned at (571) 272-3208.

The examiner of Technology Center AU 1765 will consider the request for continued examination under 37 CFR 1.114.

Karen Creasy

Karen Creasy
Petitions Examiner
Office of Petitions

---

[1] The request to apply the issue fee to the new Notice may be satisfied by completing and returning the new Issue Fee Transmittal Form PTOL-85(b), which includes the following language thereon: "Commissioner for Patents is requested to apply the Issue Fee and Publication Fee (if any) or re-apply any previously paid issue fee to the application identified above." Petitioner is advised that, whether a fee is indicated as being due or not, the Issue Fee Transmittal Form **must** be completed and timely submitted to avoid abandonment. Note the language in bold text on the first page of the Notice of Allowance and Fee(s) Due (PTOL-85).

UNITED STATES PATENT AND TRADEMARK OFFICE

UNITED STATES DEPARTMENT OF COMMERCE
United States Patent and Trademark Office
Address: COMMISSIONER FOR PATENTS
P.O. Box 1450
Alexandria, Virginia 22313-1450
www.uspto.gov

STAAS & HALSEY LLP
SUITE 700
1201 NEW YORK AVENUE, N.W.
WASHINGTON, DC 20005

Mail Date: 04/21/2010

Applicant	: Nobuhiko Akasaka	: DECISION ON REQUEST FOR
Patent Number	: 7624205	: RECALCULATION of PATENT
Issue Date	: 11/24/2009	: TERM ADJUSTMENT IN VIEW
Appliction No	: 11/146,237	: OF WYETH AND NOTICE OF INTENT TO
Filed	: 06/07/2005	: ISSUE CERTIFICATE OF CORRECTION
		:

The Request for Recalculation is **GRANTED** to the extent indicated.

The patent term adjustment has been determined to be **553** days. The USPTO will *sua sponte* issue a certificate of correction reflecting the amount of PTA days determined by the recalculation.

Prior to the issuance of the certificate of correction, the USPTO will afford patentee an opportunity to be heard and request reconsideration. Accordingly, patentee has **one month or thirty (30) days**, whichever is longer, to file a request for reconsideration of this patent term adjustment calculation. See 35 U.S.C. 154(b)(3)(B)(ii) and 37 CFR 1.322(a)(4). No extensions of time will be granted under 37 CFR 1.136.

Patentee should use document code PET.OP if electronically filing a request for reconsideration of this patent term adjustment calculation. The patentee must also include the information required by 37 CFR 1.705(b)(2) and the fee required by 37 CFR 1.18(e). If patentee does not file a timely request for reconsideration of this patent term adjustment calculation including the information required by 37 CFR 1.705(b)(2) and the fee required by 37 CFR 1.18(e), the USPTO will issue a certificate of correction reflecting the PTA determination noted above.

Patentee should be aware that in order to preserve the right to review in the United States District Court for the District of Columbia of the USPTO patent term adjustment determination, patentee must ensure that he or she also take the steps required under 35 U.S.C. 154(b)(4)(A) in a timely manner. Nothing in the request for recalculation should be construed as providing an alternative time frame for commencing a civil action under 35 U.S.C. 154(b)(4)(A).

Any questions concerning this decision should be directed to the Office of Patent Legal Administration at 571-272-7702.

UNITED STATES PATENT AND TRADEMARK OFFICE

COMMISSIONER FOR PATENTS
UNITED STATES PATENT AND TRADEMARK OFFICE
P.O. BOX 1450
ALEXANDRIA, VA 22313-1450
www.uspto.gov

JOAN H. SHIFFLETT
247 TURNER AVE
BROADWAY, VA 22815

COPY MAILED

SEP 30 2005

OFFICE OF PETITIONS

In re Application of	:	
Dwight W. Hoover et al	:	
Application No. 11/146,270	:	DECISION ON PETITION
Filed: June 6, 2005	:	TO MAKE SPECIAL
For: WASTE HEAT GENERATOR	:	37 CFR 1.102(c)

This is a decision on the petition, filed June 6, 2005 to make the above-identified application special.

The petition requests that the above-identified application be made special as set forth in M.P.E.P. § 708.02, Section III: Applicant's Health Is Poor, Section IV: Applicant's Age, Section V: Environmental Quality, and Section VI: Energy, which is being construed as a petition to be made special under the procedures set forth in M.P.E.P. § 708.02, IV.

Applicant has satisfied the provisions set forth in M.P.E.P. 708.02, IV. The declaration made by applicants is being construed as a statement that at least one of the applicants is 65 years of age or greater. Therefore, the petition is **GRANTED**.

The instant petition has been accorded "special" status.

Telephone inquires concerning this decision should be directed to Wan Laymon at (571) 272-3220.

All other inquires concerning either the examination or status of the application should be directed to the Technology Center.

This matter is being referred to Technology Center AU 3748 for expedited prosecution.

David Bucci
Petitions Examiner
Office of Petitions

UNITED STATES PATENT AND TRADEMARK OFFICE

Commissioner for Patents
United States Patent and Trademark Office
P.O. Box 1450
Alexandria, VA 22313-1450
www.uspto.gov

COPY MAILED

MAY 2 0 2008

OFFICE OF PETITIONS

JOAN H. SHIFFLETT
247 TURNER AVE
BROADWAY VA 22815

In re Application of
Dwight W. **Hoover** et al.
Application No. 11/146,270
Filed: June 06, 2005

ON PETITION

This is a decision on the petition under the unintentional provisions of 37 CFR 1.137(b), filed May 16, 2007, to revive the above-identified application.

The petition is **DISMISSED**.

Any request for reconsideration of this decision must be submitted within TWO (2) MONTHS from the mail date of this decision. Extensions of time under 37 CFR 1.136(a) are permitted. The reconsideration request should include a cover letter entitled "Renewed Petition under 37 CFR 1.137(b)." This is **not** a final agency action within the meaning of 5 U.S.C. § 704.

The application became abandoned for failure to reply in a timely manner to the non-final Office action mailed December 29, 2005, which set a shortened statutory period for reply of three (3) months. No extensions of time under the provisions of 37 CFR 1.136(a) were obtained. Accordingly, the application became abandoned on March 30, 2006.

A grantable petition under 37 CFR 1.137(b) must be accompanied by: (1) the required reply, unless previously filed; (2) the petition fee as set forth in 37 CFR 1.17(m); (3) a statement that the entire delay in filing the required reply from the due date for the reply until the filing of a grantable petition pursuant to 37 CFR 1.137(b) was unintentional; and (4) any terminal disclaimer (and fee as set forth in 37 CFR 1.20(d)) required by 37 CFR 1.137(d). Where there is a question as to whether either the abandonment or the delay in filing a petition under 37 CFR 1.137 was unintentional, the Director may require additional information. See MPEP 711.03(c)(II)(C) and (D). The instant petition lacks item (3).

The statement of delay is not acceptable. In this regard, petitioner's attention is directed to 37 CFR 1.33(b), which states:

> (b) Amendments and other papers. Amendments and other papers, except for written assertions pursuant to § 1.27(c)(2)(ii) of this part, filed in the application must be signed by:
>
> (1) A registered patent attorney or patent agent of record appointed in compliance with § 1.32(b);

(2) A registered patent attorney or patent agent not of record who acts in a representative capacity under the provisions of § 1.34;
(3) An assignee as provided for under §3.71(b) of this chapter; or
(4) All of the applicants (§ 1.41(b)) for patent, unless there is an assignee of the entire interest and such assignee has taken action in the application in accordance with § 3.71 of this chapter.

An unsigned amendment (or other paper) or one not properly signed by a person having authority to prosecute the application is not entered. This applies, for instance, where the amendment (or other paper) is signed by only one of two applicants and the other applicant has not given the one signing a power of attorney.

Therefore, as the petition is not signed by all the inventors and the record herein fails to disclose that petitioner herein (Joan H. Shifflett) was ever given a power of attorney to act on behalf of inventor Dwight W. Hoover, or that petitioner Joan H. Shifflett is an assignee of the entire interest and has complied with the provisions of 37 CFR 3.73(b), the petition is considered to not contain a proper statement of unintentional delay.

Any renewed petition should be addressed as follows:

By Mail: Mail Stop PETITION
Commissioner for Patents
P. O. Box 1450
Alexandria, VA 22313-1450

By hand: U. S. Patent and Trademark Office
Customer Service Window, Mail Stop Petitions
Randolph Building
401 Dulany Street
Alexandria, VA 22314

By fax: (571) 273-8300
ATTN: Office of Petitions

Telephone inquiries concerning this decision should be directed to Thuy Pardo at (571) 272-6052 or in her absence, the undersigned at (571)272-7099.

Christopher Bottitt

for David Bucci
Petitions Examiner
Office of Petitions

UNITED STATES PATENT AND TRADEMARK OFFICE

Commissioner for Patents
United States Patent and Trademark Office
P.O. Box 1450
Alexandria, VA 22313-1450
www.uspto.gov

Cooley Godward Kronish LLP
Attn: Patent Group
Suite 1100
777-6th Street
Washington, DC 20001

COPY MAILED

MAY 1 4 2008

OFFICE OF PETITIONS

In re Application of	:	
Sudhir Anandarao, et al.	:	
Application No. 11/146,283	:	DECISION ON PETITION
Filed: June 7, 2005	:	TO WITHDRAW
Attorney Docket No. VITL-003/00US	:	FROM RECORD
	:	

This is a decision on the Request to Withdraw as attorney or agent of record under 37 C.F.R. § 1.36(b), filed October 23, 2007 and April 7, 2008.

The request is **APPROVED**.

A grantable request to withdraw as attorney/agent of record must be signed by every attorney/agent seeking to withdraw or contain a clear indication that one attorney is signing on behalf of another/others. A request to withdraw will not be approved unless at least 30 (thirty) days would remain between the date of approval and the later of the expiration date of a time to file a response or the expiration date of the maximum time period which can be extended under 37 C.F.R. § 1.136(a).

The request was signed by Frank Pietantonio on behalf of all attorneys of record. All attorneys/agents have been withdrawn. Applicant is reminded that there is no attorney of record at this time.

The request to change the correspondence of record is not acceptable as the requested correspondence address is not that of: (1) the first named signing inventor; or (2) an intervening assignee of the entire interest under 37 C.F.R 3.71. All future communications from the Office will be directed to the first named signing inventor at the first copied address below until otherwise properly notified by the applicant.

The revocation power of attorney by assignee on December 21, 2007 was not accepted because the certificate under 37 CFR 3.73(b) was omitted.

There is no outstanding Office action at this time.

Telephone inquiries concerning this decision should be directed to Terri Williams at 571-272-2991.

Terri Williams
Petitions Examiner
Office of Petitions

cc: **Sudhir Anandarao**
415 Holmes Drive NW
Vienna, VA 22180

cc: **Mr. Sudhir Anandarao**
VitalSpring Technologies
1750 Tysons Boulevard
McLean, VA 22102

UNITED STATES PATENT AND TRADEMARK OFFICE

UNITED STATES DEPARTMENT OF COMMERCE
United States Patent and Trademark Office
Address: COMMISSIONER FOR PATENTS
P.O. Box 1450
Alexandria, Virginia 22313-1450
www.uspto.gov

APPLICATION NUMBER	FILING OR 371(C) DATE	FIRST NAMED APPLICANT	ATTY. DOCKET NO./TITLE
11/146,283	06/07/2005	Sudhir Anandarao	VITL-003/00US

CONFIRMATION NO. 3833

POWER OF ATTORNEY NOTICE

22903
COOLEY GODWARD KRONISH LLP
ATTN: PATENT GROUP
Suite 1100
777 - 6th Street, NW
WASHINGTON, DC 20001

OC000000029808469

Date Mailed: 05/07/2008

NOTICE REGARDING CHANGE OF POWER OF ATTORNEY

This is in response to the Power of Attorney filed 10/23/07 and 04/07/2008.

- The withdrawal as attorney in this application has been accepted. Future correspondence will be mailed to the new address of record. 37 CFR 1.33.

/tswilliams/

Office of Data Management, Application Assistance Unit (571) 272-4000, or (571) 272-4200, or 1-888-786-0101

UNITED STATES PATENT AND TRADEMARK OFFICE

Commissioner for Patents
United States Patent and Trademark Office
P.O. Box 1450
Alexandria, VA 22313-1450
www.uspto.gov

MAIL

FEB 16 2007
DIRECTOR OFFICE
TECHNOLOGY CENTER 2600

TOWNSEND AND TOWNSEND AND CREW, LLP
TWO EMBARCADERO CENTER
EIGHTH FLOOR
SAN FRANCISCO CA 94111-3834

In re Application of
ZHANG, WENLIN, et al.
Application No. 11/146,288
Filed: June 06, 2005
For:
PROCESS METHOD ABOUT THE SERVICE CONNECTION BETWEEN THE WIRELESS LOCAL AREA NETWORK AND USER TERMINAL

DECISION ON PETITION
TO MAKE SPECIAL

This is a decision on the petition filed August 07, 2006 under Manual of Patent Examination Procedure §708.02, VIII requesting accelerated examination.

The petition under Manual of Patent Examination Procedure §708.02, VIII, must:

(1) be filed prior to receiving any examination by the examiner,
(2) be accompanied by the required fee- $130,
(3) the claims should be directed to a single invention (if it is determined that the claims pertain to more than one invention, then applicant will have to make an election without traverse or forfeit accelerated examination status),
(4) state that a pre-examination search was made, and fully discuss the search method employed, such as classes and subclasses searched, publications, Chemical abstracts, patents, etc. A search made by a foreign patent office satisfies this requirement,
(5) be accompanied by a copy of each of the references most closely related to the subject matter encompassed by the claims if said references are not already of record,
(6) fully discuss the references, pointing out with the particularity required by 37 C.F.R. §1.111 (b) and (c), how the claimed subject matter is patentable over the references.

The petitioner meets all the above-listed requirements. Accordingly, the petition is **GRANTED**.

The application will retain its special status throughout its entire prosecution, including any appeal to the Board of Patent Appeals and Interferences, subject only to diligent prosecution by the applicant. The application file is being forwarded to the examiner for appropriate action in due course.

Michael Horabik
Special Program Examiner
Technology Center 2600
Communications

UNITED STATES PATENT AND TRADEMARK OFFICE

Commissioner for Patents
United States Patent and Trademark Office
P.O. Box 1450
Alexandria, VA 22313-1450
www.uspto.gov

JJGJR.: 06-06

Paper No: __

SMITH, GAMBRELL & RUSSELL, LLP
1230 PEACHTREE STREET, N.E.
SUITE 3100, PROMENADE II
ATLANTA GA 30309-3592

COPY MAILED
JUN 12 2006
OFFICE OF PETITIONS

In re Application of :
Fox, et al. :
Application No. 11/146,293 : ON PETITION
Deposited/Filed: 6 June, 2005 :
Attorney Docket No. 025374.018CIP1 :

This is a decision on a petition filed on 14 December, 2005, under 37 C.F.R. §1.137(b).

For the reasons set forth below, the petition under 37 C.F.R. §1.137(b) is **GRANTED**.

BACKGROUND

The record indicates:

- Petitioner failed to reply timely and properly to the Notice of Incomplete Nonprovisional Application mailed on 12 July, 2005, with reply due absent extension of time on or before 12 September, 2005;
- the application went abandoned by operation of law after midnight 12 September, 2005;
- the Office mailed the Notice of Termination of Proceedings (Abandonment) on 20 October, 2005;
- Petitioner filed the instant petition on 14 December, 2005, with fee, reply in the form of a petition to accord filing date and made the statement of unintentional delay–thus, Petitioner appears to have satisfied the regulatory requirements under 37 C.F.R. §1.137(b).

STATUTES, REGULATIONS AND ANALYSIS

Congress has authorized the Commissioner to "revive an application if the delay is shown to the satisfaction of the Commissioner to have been "unavoidable." 35 U.S.C. §133 (1994).[1]

The regulations at 37 C.F.R. §1.137(a) and (b) set forth the requirements for a petitioner to revive a previously unavoidably or unintentionally, respectively, abandoned application under this congressional grant of authority. The language of 35 U.S.C. §133 and 37 C.F.R. §1.137(a) is clear, unambiguous, and without qualification: the delay in tendering the reply to the outstanding Office action, as well as filing the first petition seeking revival, must have been unavoidable for the reply now to be accepted on petition.[2]

Delays in responding properly raise the question whether delays are unavoidable.[3] Where there is a question whether the delay was unavoidable, Petitioners must meet the burden of establishing that the delay was unavoidable within the meaning of 35 U.S.C. §133 and 37 C.F.R. §1.137(a).[4] And the Petitioner must be diligent in attending to the matter.[5] Failure to do so does not constitute the care required under Pratt, and so cannot satisfy the test for diligence and due care.

(By contrast, unintentional delays are those that do not satisfy the very strict statutory and regulatory requirements of unavoidable delay, and also, by definition, are not intentional.[6]))

---

[1] 35 U.S.C. §133 provides:
35 U.S.C. §133 Time for prosecuting application.
Upon failure of the applicant to prosecute the application within six months after any action therein, of which notice has been given or mailed to the applicant, or within such shorter time, not less than thirty days, as fixed by the Commissioner in such action, the application shall be regarded as abandoned by the parties thereto, unless it be shown to the satisfaction of the Commissioner that such delay was unavoidable.

[2] Therefore, by example, an unavoidable delay in the payment of the Filing Fee might occur if a reply is shipped by the US Postal Service, but due to catastrophic accident, the delivery is not made.

[3] See: *Changes to Patent Practice and Procedure*; *Final Rule Notice*, 62 *Fed. Reg.* at 53158-59 (October 10, 1997), 1203 *Off. Gaz. Pat. Office* at 86-87 (October 21, 1997).

[4] See: In re Application of G, 11 USPQ2d 1378, 1380 (Comm'r Pats. 1989).

[5] See: Diligence in Filing Petitions to Revive and Petitions to Withdraw the Holding of Abandonment, 1124 Off. Gaz. Pat. Office 33 (March 19, 1991). It was and is Petitioner's burden to exercise diligence in seeking either to have the holding of abandonment withdrawn or the application revived. See 1124 Off. Gaz. Pat. Office supra.

[6] Therefore, by example, an unintentional delay in the reply might occur if the reply and transmittal form are to be prepared for shipment by the US Postal Service, but other pressing matters distract one's attention and the mail is not timely deposited for shipment.

Allegations as to
Unintentional Delay

The requirements for relief under the provisions of 37 C.F.R. §1.137(b) are: petition, fee, reply, showing of unintentional delay, and–where appropriate–a terminal disclaimer and fee.

It appears that Petitioner has satisfied the requirements of the regulation.

CONCLUSION

Because Petitioner appears to have satisfied the regulatory requirements, regulation, the petition under 37 C.F.R. §1.137(b) is **granted**.

The application is released to OIPE for further processing in due course.

Telephone inquiries concerning this decision may be directed to the undersigned at (571) 272-3214.

John J. Gillon, Jr.
Senior Attorney
Office of Petitions

UNITED STATES PATENT AND TRADEMARK OFFICE

Commissioner for Patents
United States Patent and Trademark Office
P.O. Box 1450
Alexandria, VA 22313-1450
www.uspto.gov

JJGJR.: 06-06

Paper No: __

SMITH, GAMBRELL & RUSSELL, LLP
1230 PEACHTREE STREET, N.E.
SUITE 3100, PROMENADE II
ATLANTA GA 30309-3592

COPY MAILED
JUN 12 2006
OFFICE OF PETITIONS

In re Application of :
Fox, et al. :
Application No. 11/146,293 :
Deposited/Filed: 6 June, 2005 :
Attorney Docket No. 025374.018CIP1 :

ON PETITION

This is a decision on one of two petitions filed on 14 December, 2005–this the one under 37 C.F.R. §1.53.

The petition under 37 C.F.R. §1.53 is **GRANTED in part**, and **DISMISSED in part**.

BACKGROUND

The record indicates:

- the instant application was deposited on 6 June, 2005;
- on 12 July, 2005, the Office of Initial Patent Examination (OIPE) mailed a Notice of Incomplete Application (the Notice) stating that the application had not been accorded a filing date because it had been deposited without drawings as required under 35 U.S.C. 113 (first sentence);
- OIPE indicated that Petitioner might:

  –contend via petition that the drawings were submitted, or that they were not necessary for a filing date; or

–submit the drawings and accept the date of submission as the filing date.

- OIPE set a two- (2-) month period for reply.
- Petitioner failed to reply timely and properly to the Notice of Incomplete Nonprovisional Application mailed on 12 July, 2005, with reply due absent extension of time on or before 12 September, 2005;
- the application went abandoned by operation of law after midnight 12 September, 2005;
- the Office mailed the Notice of Termination of Proceedings (Abandonment) on 20 October, 2005;
- on 14 December, 2005, Petitioner filed the instant petition (and a companion petition to revive with fee, reply in the form of the instant petition to accord filing date and made the statement of unintentional delay–thus, Petitioner appeared to have satisfied the regulatory requirements and the petition under 37 C.F.R. §1.137(b) has been granted);
- the instant petition seeks a filing date of 6 June, 2005, and–while Petitioner does not acknowledge that the drawings in question were omitted in error and does not allege therein that "drawings are not necessary for an understanding of the invention"–it is noted that a review of the claims of the instant application reveals one or more method claims.

ANALYSIS

A review of the date-stamped ("060605")receipt card (see: MPEP §503[1]) presented by Petitioner

---

[1] MPEP §503 provides in pertinent part:

§503 Application Number and Filing Receipt

* * *

A return postcard should be attached to *each* patent application for which a receipt is desired. It is important that the return postcard itemize all of the components of the application. If the postcard does not itemize each of the components of the application, it will not serve as evidence that any component which was not itemized was received by the United States Patent and Trademark Office (USPTO). It should be recognized that the identification of an application by application number does not necessarily signify that the USPTO has accepted the application as complete (37 C.F.R. §1.53(a)).

* * *

RETURN POSTCARD

If a receipt of any item (e.g., paper or fee) filed in the USPTO is desired, it may be obtained by enclosing with the paper a self-addressed postcard specifically identifying the item. The USPTO will stamp the receipt date on the postcard and place it in the outgoing mail. A postcard receipt which itemizes and properly identifies the items which are being filed serves as *prima facie* evidence of receipt in the USPTO of all the items listed thereon on the date stamped thereon by the USPTO.

The identifying data on the postcard should be so complete as to clearly identify the item for which receipt is requested. For example, the postcard should identify the applicant's name, application number (if known), confirmation number (if known), filing date, interference number, title of the invention, etc. The postcard should also identify the type of paper being filed, e.g., new application, affidavit, amendment, notice of appeal, appeal brief, drawings, fees, motions, supplemental oath or declaration, petition, etc., and the number of pages being submitted. If a new

evidences the following:

* * *

Utility Patent Appln. (sic) Transmittal, Declaration (3),
specification w/Drawing Sheets, Return Receipt Postcard

* * *

While Petitioner avers that he submitted a "properly itemized postcard," it is clear from the foregoing that the documents fails to evidence the number of drawings sheets submitted.

Petitioner's averment as to the sufficiency of the detail of the receipt card is unsupported by the record.

However, as indicated above, while Petitioner has not alleged, *inter alia*, that the instant application does not require drawings for the understanding of the subject matter to be patented, a review of the application indicates that, among the claims therein are contained one or more method claims. (See: MPEP §601.01(f)(A).)

It is the practice of the Office to treat an application that contains at least one process or method claim as an application for which a drawing is not necessary for the understanding of the invention under 35 U.S.C. §113 (first sentence). (See: MPEP §601.01[2])

---

application is being filed, all parts of the application being submitted should be separately listed on the postcard, e.g., the number of pages of specification (including written description, claims and abstract), number of claims, number of sheets of drawings, number of pages of oath/declaration, number of pages of cover sheet (provisional application).

The postcard receipt will not serve as *prima facie* evidence of receipt of any item which is not adequately itemized on the postcard. For example, merely listing on the postcard "a complete application" or "patent application" will not serve as a proper receipt for each of the required components of an application (e.g., specification (including claims), drawings (if necessary), oath or declaration and the application filing fee) or missing portions (e.g., pages, sheets of drawings) of an application if one of the components or portion of a component is found to be missing by the USPTO. Each separate component should be specifically and properly itemized on the postcard. Furthermore, merely incorporating by reference in the postcard receipt, the items listed in a transmittal letter will not serve as *prima facie* evidence of receipt of those items.

The person receiving the item(s) in the USPTO will check the listing on the postcard against the item(s) being filed to be sure they are properly identified and that all the items listed on the postcard are presently being submitted to the USPTO. If any of the items listed on the postcard are not being submitted to the USPTO, those items will be crossed off and the post-card initialed by the person receiving the items. Upon return of a postcard receipt from the USPTO, the postcard receipt should be promptly reviewed by the person who filed the items to ensure that every item specifically denoted on the postcard was received by the USPTO. If the postcard receipt has been annotated to indicate that a particular item denoted on the postcard was not received by the USPTO, the postcard receipt will not serve as *prima facie* evidence of receipt of that item in the USPTO. (Emphasis supplied.)

[2] The commentary at MPEP §601.01 provides in pertinent part:

* * *

601.01(f) Applications Filed Without Drawings

35 U.S.C. 111(a)(2)(B) and 35 U.S.C. 111(b)(1)(B) each provide, in part, that an "application shall include . . . a drawing as prescribed by section 113 of this title" and 35 U.S.C. 111(a)(4) and 35 U.S.C. 111(b)(4) each provide, in part, that the "filing date . . . shall be the date on which . . . any required drawing are received in the Patent and Trademark Office." 35 U.S.C. 113 (first sentence) in turn provides that an "applicant shall furnish a drawing where necessary for the understanding of the subject matter sought to be patented.

Applications filed without drawings are initially inspected to determine whether a drawing is referred to in the specification, and if not, whether a drawing is necessary for the understanding of the invention. 35 U.S.C. 113 (first sentence).

It has been USPTO practice to treat an application that contains at least one process or method claim as an application for which a drawing is

Thus, the argument of the petition is construed, in part and for the purposes of this decision, to mean that drawings are not necessary for a filing date in this application. In the absence of entry by the Examiner of an amendment, drawings will not be further considered as a part of this case.

In view of the above, the Notice mailed on 12 July, 2005, hereby is withdrawn to the extent that it indicates no filing date will be granted.

CONCLUSION

The petition is **granted in part**, to the extent that the application will be accorded the filing date of 6 June, 2005, without drawings as part of the original disclosure of the application; in all other respects the petition **is dismissed**. The petition fee is waived.

As a matter of expediting prosecution, Petitioner may a preliminary amendment deleting reference to any drawings and seek entry of that amendment by the Examiner.

No petition is required for that purpose.

---

not necessary for an understanding of the invention under 35 U.S.C. 113 (first sentence). The same practice has been followed in composition applications.

The same practice has been followed in composition applications. Other situations in which drawings are usually not considered necessary for the understanding of the invention under 35
U.S.C. 113 (first sentence) are:

(A) *Coated articles or products*: where the invention resides solely in coating or impregnating a conventional sheet (*e.g.*, paper or cloth, or an article of known and conventional character with a particu lar composition), unless significant details of structure or arrangement are involved in the article claims;

* * *

A nonprovisional application having at least one claim, or a provisional application having at least some disclosure, directed to the subject matter discussed above for which a drawing is usually not considered essential for a filing date, not describing drawing figures in the specification, and filed without drawings will simply be processed for examination, so long as the application contains something that can be construed as a written description. A nonprovisional application having at least one claim, or a provisional application having at least some disclosure, directed to the subject matter discussed above for which a drawing is usually not considered essential for a filing date, describing drawing figure(s) in the specification, but filed without drawings will be treated as an application filed without all of the drawing figures referred to in the specification as discussed in MPEP § 601.01(g), so long as the application contains something that can be construed as a written description. In a situation in which the appropriate Technology Center (TC) determines that drawings are necessary under 35 U.S.C. 113 (first sentence) the filing date issue will be reconsidered by the USPTO.

* * *

The application is being referred to the Office of Initial Patent Examination to be processed for correction of the filing date to 6 June, 2005, with the 18 pages of specification (description, claims, abstract) deposited on 6 June, 2005, and no drawings as the original disclosure.

Telephone inquiries specific to this decision may be directed to the undersigned at (571) 272-3214.

John J. Gillon, Jr.
Senior Attorney
Office of Petitions

UNITED STATES PATENT AND TRADEMARK OFFICE

Commissioner for Patents
United States Patent and Trademark Office
P.O. Box 1450
Alexandria, VA 22313-1450
www.uspto.gov
DIW Apr-08

SMITH, GAMBRELL & RUSSELL
SUITE 3100, PROMENADE II
1230 PEACHTREE STREET, N.E.
ATLANTA GA 30309-3592

COPY MAILED

APR 22 2008

OFFICE OF PETITIONS

In re Application of :
Fox et al. :
Application Number: 11/146293 : DECISION ON PETITION
Filing Date: 06/06/2005 :
Attorney Docket Number: :
025374.018CIP1 :

This is a decision in reference to the petition filed on August 29, 2007, under 37 CFR 1.182.

The petition is **GRANTED to the extent indicated**.

Petitioner requests that the application be accorded a filing date of June 6, 2005, and that an official Filing Receipt be issued.

A review of the official file reveals that by decision mailed on June 12, 2006, the application was accorded a filing date of June 6, 2005. However, a review of Office records indicates that the filing date was not corrected in accordance with the decision mailed on June 12, 2006.

The Office apologizes for the delay in the correction of the filing date, and regrets any inconvenience to petitioners.

As the present request was not necessitated by applicant error, the petition fee will be refunded.

The application is referred to the Office of Patent Application Processing for correction of the filing date to **June 6, 2005**, and for issuance of a Corrected Filing Receipt. Thereafter, the application will be examined in due course.

Telephone inquires should be directed to the undersigned at 571 272-3231.

DWood

Douglas I. Wood
Senior Petitions Attorney
Office of Petitions

UNITED STATES PATENT AND TRADEMARK OFFICE

UNITED STATES DEPARTMENT OF COMMERCE
United States Patent and Trademark Office
Address: COMMISSIONER FOR PATENTS
P.O. Box 1450
Alexandria, Virginia 22313-1450
www.uspto.gov

JUDY JARECKI-BLACK; PH.D., J.D.
3239 SATELLITE BLVD. 3RD FLOOR
DULUTH, GA 30096

Mail Date: 04/20/2010

Applicant	: Tesfai Tseggai	: DECISION ON REQUEST FOR
Patent Number	: 7582302	: RECALCULATION of PATENT
Issue Date	: 09/01/2009	: TERM ADJUSTMENT IN VIEW
Appliction No	: 11/146,299	: OF WYETH
Filed	: 06/06/2005	:
		:

The Patentee's Request for Recalculation is **DISMISSED.**

This Request is deemed ineligible for consideration for one or more of the following reasons:

(A). The patent for which PTA recalculation is requested is either a design or reissue application or is a reexamination proceeding;

(B). The patent for which PTA recalculation is requested resulted from a utility or plant application filed under 35 USC 111(a) before May 29, 2000 and no CPA filed in the application on/after May 29, 2000;

(C). The patent for which PTA recalculation is requested resulted from an international application in which the international filing date was before May 29, 2000 and no CPA filed in the application on/after May 29, 2000;

(D). The patent for which PTA recalculation is requested issued on/after March 2, 2010;

(E). The Request for Recalculation was filed more than 180 days after the grant date of the patent and the request was not filed within two months of a dismissal of a request for reconsideration of the of the patent term under 37 CFR 1.705(d);

(F). The Request for Recalculation is not solely limited to USPTO pre-Wyeth interpretation of 35 U.S.C. 154(b)(2)(A);

or

(G). A civil action was filed pursuant to 35 U.S.C. 154(b)(4)(A)concerning the same patent at issue in this request.

Patentee may file a reply to this decision dismissing the Request for Recalculation. Patentee must file such reply within one month or thirty days, whichever is longer, of the mail date of the decision dismissing the Request for Recalculation. No fee is required if patentee is asserting in the reply that the dismissal for ineligibility is improper.

Patentee should use document code PET.OP if electronically filing a reply to this dismissal. If the USPTO finds that the request was improperly deemed ineligible, the USPTO will mail applicant a recalculation determination.

Patentee should be aware that in order to preserve the right to review in the United States District Court for the District of Columbia of the USPTO patent term adjustment determination, patentee must ensure that he or she also take the steps required under 35 U.S.C. 154(b)(4)(A). Nothing in the request for recalculation should be construed as providing an alternative time frame for commencing a civil action under 35 U.S.C. 154 (b)(4)(A).

Any questions concerning this decision should be directed to the Office of Patent Legal Administration at 571-272-7702.

UNITED STATES PATENT AND TRADEMARK OFFICE

UNITED STATES DEPARTMENT OF COMMERCE
United States Patent and Trademark Office
Address: COMMISSIONER FOR PATENTS
P.O. Box 1450
Alexandria, Virginia 22313-1450
www.uspto.gov

TOWNSEND AND TOWNSEND AND CREW, LLP
TWO EMBARCADERO CENTER
EIGHTH FLOOR
SAN FRANCISCO, CA 94111-3834

Mail Date: 04/21/2010

Applicant	: Ronald Chang	: DECISION ON REQUEST FOR
Patent Number	: 7575721	: RECALCULATION of PATENT
Issue Date	: 08/18/2009	: TERM ADJUSTMENT IN VIEW
Appliction No	: 11/146,304	: OF WYETH AND NOTICE OF INTENT TO
Filed	: 06/06/2005	: ISSUE CERTIFICATE OF CORRECTION
		:

The Request for Recalculation is **GRANTED** to the extent indicated.

The patent term adjustment has been determined to be **1018** days. The USPTO will *sua sponte* issue a certificate of correction reflecting the amount of PTA days determined by the recalculation.

Prior to the issuance of the certificate of correction, the USPTO will afford patentee an opportunity to be heard and request reconsideration. Accordingly, patentee has **one month or thirty (30) days**, whichever is longer, to file a request for reconsideration of this patent term adjustment calculation. See 35 U.S.C. 154(b)(3)(B)(ii) and 37 CFR 1.322(a)(4). No extensions of time will be granted under 37 CFR 1.136.

Patentee should use document code PET.OP if electronically filing a request for reconsideration of this patent term adjustment calculation. The patentee must also include the information required by 37 CFR 1.705(b)(2) and the fee required by 37 CFR 1.18(e). If patentee does not file a timely request for reconsideration of this patent term adjustment calculation including the information required by 37 CFR 1.705(b)(2) and the fee required by 37 CFR 1.18(e), the USPTO will issue a certificate of correction reflecting the PTA determination noted above.

Patentee should be aware that in order to preserve the right to review in the United States District Court for the District of Columbia of the USPTO patent term adjustment determination, patentee must ensure that he or she also take the steps required under 35 U.S.C. 154(b)(4)(A) in a timely manner. Nothing in the request for recalculation should be construed as providing an alternative time frame for commencing a civil action under 35 U.S.C. 154(b)(4)(A).

Any questions concerning this decision should be directed to the Office of Patent Legal Administration at 571-272-7702.

UNITED STATES PATENT AND TRADEMARK OFFICE

UNITED STATES DEPARTMENT OF COMMERCE
United States Patent and Trademark Office
Address: COMMISSIONER FOR PATENTS
P.O. Box 1450
Alexandria, Virginia 22313-1450
www.uspto.gov

THE WEBB LAW FIRM, P.C.
700 KOPPERS BUILDING
436 SEVENTH AVENUE
PITTSBURGH, PA 15219

Mail Date: 04/23/2010

Applicant	: Charles E. Boyer	: DECISION ON REQUEST FOR
Patent Number	: 7644478	: RECALCULATION of PATENT
Issue Date	: 01/12/2010	: TERM ADJUSTMENT IN VIEW
Appliction No	: 11/146,308	: OF WYETH AND NOTICE OF INTENT TO
Filed	: 06/06/2005	: ISSUE CERTIFICATE OF CORRECTION
		:

The Request for Recalculation is **GRANTED** to the extent indicated.

The patent term adjustment has been determined to be **793** days. The USPTO will *sua sponte* issue a certificate of correction reflecting the amount of PTA days determined by the recalculation.

Prior to the issuance of the certificate of correction, the USPTO will afford patentee an opportunity to be heard and request reconsideration. Accordingly, patentee has **one month or thirty (30) days**, whichever is longer, to file a request for reconsideration of this patent term adjustment calculation. See 35 U.S.C. 154(b)(3)(B)(ii) and 37 CFR 1.322(a)(4). No extensions of time will be granted under 37 CFR 1.136.

Patentee should use document code PET.OP if electronically filing a request for reconsideration of this patent term adjustment calculation. The patentee must also include the information required by 37 CFR 1.705(b)(2) and the fee required by 37 CFR 1.18(e). If patentee does not file a timely request for reconsideration of this patent term adjustment calculation including the information required by 37 CFR 1.705(b)(2) and the fee required by 37 CFR 1.18(e), the USPTO will issue a certificate of correction reflecting the PTA determination noted above.

Patentee should be aware that in order to preserve the right to review in the United States District Court for the District of Columbia of the USPTO patent term adjustment determination, patentee must ensure that he or she also take the steps required under 35 U.S.C. 154(b)(4)(A) in a timely manner. Nothing in the request for recalculation should be construed as providing an alternative time frame for commencing a civil action under 35 U.S.C. 154(b)(4)(A).

Any questions concerning this decision should be directed to the Office of Patent Legal Administration at 571-272-7702.

UNITED STATES PATENT AND TRADEMARK OFFICE

COMMISSIONER FOR PATENTS
UNITED STATES PATENT AND TRADEMARK OFFICE
P.O. BOX 1450
ALEXANDRIA, VA 22313-1450
www.uspto.gov

OBLON, SPIVAK, MCCLELLAND MAIER & NEUSTADT, P.C.
1940 DUKE STREET
ALEXANDRIA VA 22314

COPY MAILED
JAN 08 2009

In re Application of	:	
Kazumitsu Watanabe	:	
Application No. 11/146,331	:	DECISION DISMISSING PETITION
Filed: June 7, 2005	:	UNDER 37 CFR 1.313(a)
Attorney Docket No. 273494US2	:	

This is a decision on the petition filed January 7, 2009, which is being treated under 37 CFR 1.313(a), requesting withdrawal of the above-identified application from issue.

The petition is **dismissed** as moot for the reasons stated below.

A review of the file record discloses that a Notice of Allowance and Fee(s) Due was mailed on October 21, 2008 with the issue fee being due on or before January 21, 2009. The issue fee in this case has not been paid.

The filing of a petition under 37 CFR 1.313(a) is unnecessary, since the mere filing of an RCE and submission will effectively withdraw an application from issue prior to payment of the issue fee. In view thereof, the petition to withdraw from issue is dismissed as involving a moot issue. *Note* MPEP §§ 706.07(h)(IX) and 1308.

Inquiries concerning this decision may be directed to the undersigned at (571) 272-3208.

This application is being referred to Technology Center AU 2625 for appropriate processing of the RCE filed January 7, 2009, and for consideration of the concurrently filed IDS.

Karen Creasy

Karen Creasy
Petitions Examiner
Office of Petitions

UNITED STATES PATENT AND TRADEMARK OFFICE

Commissioner for Patents
United States Patent and Trademark Office
P.O. Box 1450
Alexandria, VA 22313-1450
www.uspto.gov

COOPER & DUNHAM, LLP
30 Rockefeller Plaza
20th Floor
NEW YORK, NY 10112

COPY MAILED

JAN 13 2009

OFFICE OF PETITIONS

In re Application of	:	
Masato Tokuyama	:	
Application No. 11/146,336	:	DECISION ON PETITION
Filed: June 6, 2005	:	
Attorney Docket No. 2271/74111	:	

This is a decision on the petition under the unintentional provisions of 37 CFR 1.137(b), filed December 23, 2008, to revive the above-identified application.

The petition is **GRANTED**.

This application became abandoned for failure to submit corrected formal drawings on or before September 30, 2008, as required by the Notice of Allowance and Fee(s) Due and the Notice of Allowability, mailed June 30, 2008. Accordingly, the date of abandonment of this application is October 1, 2008.

The petition satisfies the requirements of 37 CFR 1.137(b) in that petitioner has supplied (1) the reply in the form of corrected formal drawings , (2) the petition fee of $1620; and (3) a proper statement of unintentional delay.

Telephone inquiries concerning this decision should be directed to JoAnne Burke at (571) 272-4584.

This application is being referred to the Office of Data Management for processing into a patent.

Ramesh Krishnamurthy

Ramesh Krishnamurthy
Petitions Examiner
Office of Petitions

Dkt. 2271/74111

IN THE UNITED STATES PATENT AND TRADEMARK OFFICE

Application of: Masato TOKUYAMA

Serial No.: 11/146,336

Date Filed: June 6, 2005

For: PHASE DIFFERENCE DETECTION CIRCUIT AND OPTICAL DISK DEVICE

30 Rockefeller Plaza, 20th Floor
New York, NY 10112
(212) 278-0400
December 23, 2008

Mail Stop Petition
Commissioner for Patents
P.O. Box 1450
Alexandria, VA 22313-1450

Sir:

PETITION TO REVIVE AN UNINTENTIONALLY ABANDONED APPLICATION UNDER 37 C.F.R. §1.137(b)

A Notice of Allowance dated June 30, 2008 was issued by the United States Patent and Trademark Office (PTO) in connection with this application. The due date for paying the issue fee and publication fee and for submitting corrected drawings was September 30, 2008.

Applicant submitted payment of the issue fee and publication fee on September 26, 2008. Corrected drawings in response to the June 30, 2008 Notice of Allowance, through an inadvertent error, were not filed by the September 30, 2008 due date, and thereby the application unintentionally became abandoned.

Attached as Exhibit A hereto is a Notice Of Abandonment mailed October 23, 2008 by the Patent Office.

Since this Petition under 37 C.F.R. §1.137(b) is being submitted within two months of the October 23, 2008 mailing date of the Notice Of Abandonment, the Petition is being timely filed.

Requirements of Petition to Revive

A petition under 37 C.F.R. §1.137(b) must be accompanied by:

(1) the required reply, unless it has been previously filed;
(2) the petition fee set forth in 37 C.F.R. §1.17(m);
(3) a statement that the entire delay in filing the required reply from the due date for the reply until the filing of a grantable petition pursuant to this paragraph was unintentional; and
(4) any terminal disclaimer (and fee as set forth in §120(d)) required pursuant to 37 C.F.R. §1.137 (c) for a utility application filed before June 8, 1995.

A replacement drawing for Fig. 9 (wherein the figure is identified as Background Art) is attached as **Exhibit B** hereto. Accordingly, it is believed that the required reply to the June 30, 2008 Notice Of Allowance is being submitted herewith.

The fee for a Petition under 37 C.F.R. §1.137(b) as set forth in 37 C.F.R. §1.17(m) is $1,620.00 and authorization is hereby given to charge the amount of this Petition fee, and any additional required fees, to Deposit Account No. 03-3125.

The entire delay in filing the required reply, i.e. response to the June 30, 2008 Notice of Allowance, until the filing of a grantable petition pursuant to 37 C.F.R. §1.137(b), was unintentional.

Because this application was filed after June 8, 1995, 37 C.F.R. §1.137(c) does not require any terminal disclaimer to be filed.

In view of the foregoing, Applicant earnestly solicits an expeditious revival of the subject application.

If a telephone interview would be of assistance in resolving any issue in connection with this Petition, Applicant's undersigned attorney invites the Examiner to telephone him at the number provided below.

Respectfully submitted,

Paul Teng, Reg. No. 40,837
Attorney for Applicant
Cooper & Dunham LLP
30 Rockefeller Plaza, 20th Floor
New York, NY 10112
(212) 278-0400

EXHIBIT A

to

PETITION TO REVIVE AN UNINTENTIONALLY ABANDONED APPLICATION UNDER 37 C.F.R. §1.137(b)

(Serial No. 11/146,336)

UNITED STATES PATENT AND TRADEMARK OFFICE

UNITED STATES DEPARTMENT OF COMMERCE
United States Patent and Trademark Office
Address COMMISSIONER FOR PATENTS
P O Box 1450
Alexandria, Virginia 22313-1450
www uspto gov

APPLICATION NO.	FILING DATE	FIRST NAMED INVENTOR	ATTORNEY DOCKET NO.	CONFIRMATION NO.
11/146,336	06/06/2005	Masato Tokuyama	2271/74111	7511

EXAMINER
ORTIZ CRIADO, JORGE L

ART UNIT	PAPER NUMBER
2627	

MAIL DATE	DELIVERY MODE
10/23/2008	PAPER

7590 10/23/2008
COOPER & DUNHAM, LLP
1185 AVENUE OF THE AMERICAS
NEW YORK, NY 10036

OCT 28 2008
DOCKET CLERK

Notice of Abandonment

This application is abandoned in view of:

1. ☐ The applicant's failure to timely file a proper reply to the Office letter mailed on _____.
   (a) ☐ A reply was received on _____ (with a Certificate of Mailing or Transmission date _____), which is after the expiration of the period for reply (including a total extension of ____ month(s)) which expired on _____.
   (b) ☐ A proposed reply was received on _____, but it does not constitute a proper reply under 37 CFR 1.113(a) to the final rejection. (A proper reply under 37 CFR 1.113 to a final rejection consists only of:
   (1) a timely filed amendment which places the application in condition for allowance;
   (2) a timely filed Notice of Appeal (with appeal fee);
   (3) a timely filed Request for Continued Examination (RCE) in compliance with 37 CFR 1.114).
   (c) ☐ A reply was received on _____ but it does not constitute a proper reply, or a bona fide attempt at a proper reply, to the non final rejection. See 37 CFR 1.85(a) and 1.111. (See explanation in box e below).
   (d) ☐ No reply has been received.
2. ☐ Applicant's failure to timely pay the required issue fee and publication fee, if applicable, within the statutory period of three months from the mailing date of the Notice of Allowance (PTOL-85).
   (a) ☐ The issue fee and publication fee, if applicable, was received on _____ (with a Certificate of Mailing or Transmission date _____), which is after the expiration of the statutory period for payment of the issue fee (and publication fee) set in the Notice of Allowance (PTOL-85).
   (b) ☐ The submitted fee of $_____ is insufficient. A balance of $_____ is due.
   The issue fee required by 37 CFR 1.18 is $_____.
   The publication fee, if required by 37 CFR 1.18(d) , is $_____.
   (c) ☐ The issue fee and publication fee, if applicable, has not been recieved.
3. ☒ Applicant's failure to timely file corrected drawings as required by, and within the three-month period set in, the Notice of Allowability (PTO-37).
   (a) ☐ Proposed corrected drawings were received on _____ (with a Certificate of Mailing or Trasmission dated _____), which is after the expiration of the period for reply.
   (b) ☒ No corrected drawing have been received.
4. ☐ The letter of express abandonment which is signed by the attorney or agent of record, the assignee of the entire interest, or all of the applicants.
5. ☐ The letter of express abandonment which is signed by an attorney or agent (acting in a representative capacity under 37 CFR 1.34(a)) upon the filing of a continuing application.
6. ☐ The decision by the Board of Patent Appeals and Interference rendered on _____ and because the period for seeking court review of the decision has expired and there are no allowed claims.
7. ☐ The reason(s) below:

Petitions to revive under 37 CFR 1.137(a) or (b), or request to withdraw the holding of abandonment under 37 CFR 1.181, should be promptly filed to minimize any negative effects on patent term.

Telephone inquiries should be directed to the Office of Data Management at (571) 272-4200.

Patent Publication Branch
Office of Data Management

EXHIBIT B

to

PETITION TO REVIVE AN UNINTENTIONALLY ABANDONED APPLICATION UNDER 37 C.F.R. §1.137(b)

(Serial No. 11/146,336)

FIG.9

Background Art

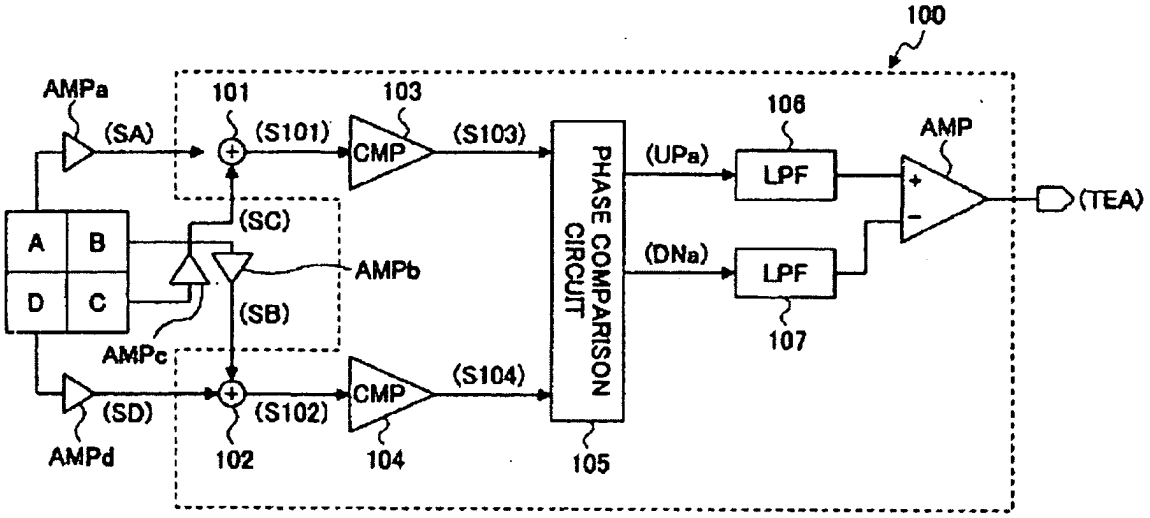

UNITED STATES PATENT AND TRADEMARK OFFICE

Commissioner for Patents
United States Patent and Trademark Office
P.O. Box 1450
Alexandria, VA 22313-1450
www.uspto.gov

JLB CONSULTING, INC.
C/O INTELLEVATE
P.O. BOX 52050
MINNEAPOLIS MN 55402

COPY MAILED

JUN 15 2007

OFFICE OF PETITIONS

In re Application of	:	
Michael Joseph Sinko	:	
Application No. 11/146,347	:	DECISION ON PETITION
Filed: June 6, 2005	:	UNDER 37 CFR 1.137(b)
Attorney Docket No. J116U001US00	:	

This is a decision on the petition, filed February 12, 2007, which is being treated as a petition under 37 CFR 1.137(b) to revive the instant nonprovisional application for failure to timely notify the U.S. Patent and Trademark (USPTO) of the filing of an application in a foreign country, or under a multinational treaty that requires publication of applications eighteen months after filing. *See* 37 CFR 1.137(f).

The petition is **GRANTED**.

Petitioner states that the instant nonprovisional application is the subject of an application filed in an eighteen-month publication country on May 25, 2006. However, the USPTO was unintentionally not notified of this filing within 45 days subsequent to the filing of the subject application in an eighteen-month publication country.

In view of the above, this application became abandoned pursuant to 35 U.S.C. § 122(b)(2)(B)(iii) and 37 CFR 1.213(c) for failure to timely notify the Office of the filing of an application in a foreign country or under a multilateral international agreement that requires publication of applications 18 months after filing.

A petition to revive an application abandoned pursuant to 35 U.S.C. 122(b)(2)(B)(iii) for failure to notify the USPTO of a foreign filing must be accompanied by:

(1) the required reply which is met by the notification of such filing in a foreign country or under a multinational treaty;
(2) the petition fee as set forth in 37 CFR 1.17(m); and
(3) a statement that the entire delay in filing the required reply from the due date of the reply until the filing of a grantable petition was unintentional.

The instant petition has been found to be in compliance with 37 CFR 1.137(b). Accordingly, the failure to timely notify the USPTO of a foreign or international filing within 45 days after the date of filing of

such foreign or international application as provided by 35 U.S.C. § 122(b)(2)(B)(iii) and 37 CFR 1.213(c) is accepted as having been unintentionally delayed.

The previous Request and Certification under 35 U.S.C. § 122(b)(2)(B)(i) has been rescinded. A Notice Regarding Rescission of Nonpublication Request which sets forth the projected publication date of September 20, 2007 accompanies this decision on petition.

Telephone inquiries concerning this decision should be directed to the undersigned at (571) 272-3208.

This application is being referred to Technology Center Art Unit 2617 for examination in due course.

Karen Creasy

Karen Creasy
Petitions Examiner
Office of Petitions

ATTACHMENT: Notice Regarding Rescission of Nonpublication Request

UNITED STATES PATENT AND TRADEMARK OFFICE

UNITED STATES DEPARTMENT OF COMMERCE
United States Patent and Trademark Office
Address: COMMISSIONER FOR PATENTS
P.O. Box 1450
Alexandria, Virginia 22313-1450
www.uspto.gov

APPLICATION NUMBER	FILING/RECEIPT DATE	FIRST NAMED APPLICANT	ATTY. DOCKET NO.
11/146,347	06/06/2005	Michael Joseph Sinko	J116U001US00

CONFIRMATION NO. 5712

33893
JLB CONSULTING, INC.
c/o INTELLEVATE
P.O. BOX 52050
MINNEAPOLIS, MN 55402

Date Mailed: 06/15/2007

Communication Regarding Rescission Of Nonpublication Request and/or Notice of Foreign Filing

Applicant's rescission of the previously-filed nonpublication request and/or notice of foreign filing is acknowledged. The paper has been reflected in the Patent and Trademark Office's (USPTO's) computer records so that the earliest possible projected publication date can be assigned.

The projected publication date is 09/20/2007.

If applicant rescinded the nonpublication request before or on the date of "foreign filing,"[1] then no notice of foreign filing is required.

If applicant foreign filed the application after filing the above application and before filing the rescission, and the rescission did not also include a notice of foreign filing, then a notice of foreign filing (not merely a rescission) is required to be filed within 45 days of the date of foreign filing. See 35 U.S.C. § 122(b)(2)(B)(iii), and Clarification of the United States Patent and Trademark Office's Interpretation of the Provisions of 35 U.S.C. § 122(b)(2)(B)(ii)-(iv), 1272 Off. Gaz. Pat. Office 22 (July 1, 2003).

If a notice of foreign filing is required and is not filed within 45 days of the date of foreign filing, then the application becomes abandoned pursuant to 35 U.S.C. § 122(b)(2)(B)(iii). In this situation, applicant should either file a petition to revive or notify the Office that the application is abandoned. See 37 CFR 1.137(f). Any such petition to revive will be forwarded to the Office of Petitions for a decision. Note that the filing of the petition will not operate to stay any period of reply that may be running against the application.

Questions regarding petitions to revive should be directed to the Office of Petitions at (571) 272-3282. Questions regarding publications of patent applications should be directed to the patent application publication hotline at (703) 605-4283 or by e-mail pgpub@uspto.gov.

[1] Note, for purpose of this notice, that "foreign filing" means "filing an application directed to the same invention in another country, or under a multilateral international agreement, that requires publication of applications 18 months after filing".

UNITED STATES PATENT AND TRADEMARK OFFICE

UNITED STATES DEPARTMENT OF COMMERCE
United States Patent and Trademark Office
Address: COMMISSIONER FOR PATENTS
P.O. Box 1450
Alexandria, Virginia 22313-1450
www.uspto.gov

DUFT BORNSEN & FISHMAN, LLP
1526 SPRUCE STREET
SUITE 302
BOULDER, CO 80302

Mail Date: 05/03/2010

Applicant	: Yoshihiro Ikeda	: DECISION ON REQUEST FOR
Patent Number	: 7632580	: RECALCULATION of PATENT
Issue Date	: 12/15/2009	: TERM ADJUSTMENT IN VIEW
Application No	: 11/146,348	: OF WYETH AND NOTICE OF INTENT TO
Filed	: 06/06/2005	: ISSUE CERTIFICATE OF CORRECTION
		:

The Request for Recalculation is **GRANTED** to the extent indicated.

The patent term adjustment has been determined to be **1190** days. The USPTO will *sua sponte* issue a certificate of correction reflecting the amount of PTA days determined by the recalculation.

Prior to the issuance of the certificate of correction, the USPTO will afford patentee an opportunity to be heard and request reconsideration. Accordingly, patentee has **one month or thirty (30) days**, whichever is longer, to file a request for reconsideration of this patent term adjustment calculation. See 35 U.S.C. 154(b)(3)(B)(ii) and 37 CFR 1.322(a)(4). No extensions of time will be granted under 37 CFR 1.136.

Patentee should use document code PET.OP if electronically filing a request for reconsideration of this patent term adjustment calculation. The patentee must also include the information required by 37 CFR 1.705(b)(2) and the fee required by 37 CFR 1.18(e). If patentee does not file a timely request for reconsideration of this patent term adjustment calculation including the information required by 37 CFR 1.705(b)(2) and the fee required by 37 CFR 1.18(e), the USPTO will issue a certificate of correction reflecting the PTA determination noted above.

Patentee should be aware that in order to preserve the right to review in the United States District Court for the District of Columbia of the USPTO patent term adjustment determination, patentee must ensure that he or she also take the steps required under 35 U.S.C. 154(b)(4)(A) in a timely manner. Nothing in the request for recalculation should be construed as providing an alternative time frame for commencing a civil action under 35 U.S.C. 154(b)(4)(A).

Any questions concerning this decision should be directed to the Office of Patent Legal Administration at 571-272-7702.

UNITED STATES PATENT AND TRADEMARK OFFICE

UNITED STATES DEPARTMENT OF COMMERCE
United States Patent and Trademark Office
Address: COMMISSIONER FOR PATENTS
P.O. Box 1450
Alexandria, Virginia 22313-1450
www.uspto.gov

MEYERTONS, HOOD, KIVLIN, KOWERT & GOETZEL, P.C.
P.O. BOX 398
AUSTIN, TX 78767-0398

Mail Date: 04/20/2010

Applicant	: Brian Sierer	: DECISION ON REQUEST FOR
Patent Number	: 7630854	: RECALCULATION of PATENT
Issue Date	: 12/08/2009	: TERM ADJUSTMENT IN VIEW
Appliction No	: 11/146,364	: OF WYETH AND NOTICE OF INTENT TO
Filed	: 06/06/2005	: ISSUE CERTIFICATE OF CORRECTION
		:

The Request for Recalculation is **GRANTED** to the extent indicated.

The patent term adjustment has been determined to be **1220** days. The USPTO will *sua sponte* issue a certificate of correction reflecting the amount of PTA days determined by the recalculation.

Prior to the issuance of the certificate of correction, the USPTO will afford patentee an opportunity to be heard and request reconsideration. Accordingly, patentee has **one month or thirty (30) days**, whichever is longer, to file a request for reconsideration of this patent term adjustment calculation. See 35 U.S.C. 154(b)(3)(B)(ii) and 37 CFR 1.322(a)(4). No extensions of time will be granted under 37 CFR 1.136.

Patentee should use document code PET.OP if electronically filing a request for reconsideration of this patent term adjustment calculation. The patentee must also include the information required by 37 CFR 1.705(b)(2) and the fee required by 37 CFR 1.18(e). If patentee does not file a timely request for reconsideration of this patent term adjustment calculation including the information required by 37 CFR 1.705(b)(2) and the fee required by 37 CFR 1.18(e), the USPTO will issue a certificate of correction reflecting the PTA determination noted above.

Patentee should be aware that in order to preserve the right to review in the United States District Court for the District of Columbia of the USPTO patent term adjustment determination, patentee must ensure that he or she also take the steps required under 35 U.S.C. 154(b)(4)(A) in a timely manner. Nothing in the request for recalculation should be construed as providing an alternative time frame for commencing a civil action under 35 U.S.C. 154(b)(4)(A).

Any questions concerning this decision should be directed to the Office of Patent Legal Administration at 571-272-7702.

UNITED STATES PATENT AND TRADEMARK OFFICE

Commissioner for Patents
United States Patent and Trademark Office
P.O. Box 1450
Alexandria, VA 22313-1450
www.uspto.gov

JUL 20 2005

Boris Leschinsky
P.O. Box 72
Waldwick NJ 07463

In re Application of	:	
Joe Baumchen	:	
Serial No.: 11/146,367	:	DECISION ON PETITION
Filed: June 6, 2005	:	
For: Method and a Dual-Array Transducer	:	
Probe for Real Time Mechanical Imaging of	:	
Prostate	:	

This is in response to applicants' petition filed June 6, 2005 to make the above-identified application special under the provisions of 37 CFR 1.102(c), based on the age of the applicant.

Applicant has satisfied the provisions set forth in M.P.E.P. 708.02, IV. Therefore the petition is **GRANTED**.

The application will be forwarded to the examiner for action on the merits commensurate with this decision.

Should there be any questions with regard to this letter please contact Frederick Schmidt by letter addressed to the Director, Technology Center 3700, P.O. Box 1450 Alexandria, VA 22313-1450, or by telephone at (571) 272-2975 or by facsimile transmission at (571) 273-8300.

Frederick R. Schmidt

Frederick R. Schmidt, Director
Technology Center 3700

UNITED STATES PATENT AND TRADEMARK OFFICE

Commissioner for Patents
United States Patent and Trademark Office
P.O. Box 1450
Alexandria, VA 22313-1450
www.uspto.gov

BORIS LESCHINSKY
P.O. BOX 72
WALDWICK NJ 07463

COPY MAILED

MAY 22 2008

OFFICE OF PETITIONS

In re Application of
Armen P. Sarvazyan et al.
Application No. 11/146,367
Filed: June 6, 2005
Attorney Docket No. AL-11

DECISION GRANTING PETITION

This is a decision on the petition, filed March 24, 2008, which is being treated as a petition under 37 CFR 1.137(b) to revive the instant nonprovisional application for failure to timely notify the U.S. Patent and Trademark (USPTO) of the filing of an application in a foreign country, or under a multinational treaty that requires publication of applications eighteen months after filing. *See* 37 CFR 1.137(f).

The petition is **GRANTED**.

Petitioner states that the present nonprovisional application is the subject of a foreign or international application filed on May 5, 2006. However, the U.S. Patent and Trademark Office was unintentionally not notified of this filing within 45 days subsequent to the filing of the subject application in a foreign country.

In view of the above, this application became abandoned pursuant to 35 U.S.C. § 122(b)(2)(B)(iii) and 37 CFR 1.213(c) for failure to timely notify the Office of the filing of an application in a foreign country, or under a multilateral international agreement, that requires publication of applications 18 months after filing.

A petition under 37 CFR 1.137(f) must be accompanied by:

(1) the reply which is met by the notification of such filing in a foreign country or under a multinational treaty;

(2) the petition fee as set forth in 37 CFR 1.17(m); and

(3) a statement that the entire delay in filing the required reply from the due date of the reply until the filing of a grantable petition was unintentional.

The present petition has been found to be in compliance with 37 CFR 1.137(f). Accordingly, the failure to timely notify the Office of a foreign or international filing within 45 days after the date of filing of such foreign or international application as provided by 35 U.S.C. § 122(b)(2)(B)(I) has been rescinded. The projected publication date is August 28, 2008 and a copy of the communication regarding rescission is included herein.

The petition fee in the amount of $770.00 has been applied to the finance records for this application.

This matter is being referred to Technology Center 3768 for further examination in due course.

Telephone inquiries related to this decision should be directed to the undersigned Petitions Attorney at (571) 272-3212.

Patricia Faison-Ball

Patricia Faison-Ball
Senior Petitions Attorney
Office of Petitions

ATTACHMENT: Communication Regarding Rescission of Nonpublication Request And/or Notice of Foreign Filing

UNITED STATES PATENT AND TRADEMARK OFFICE

UNITED STATES DEPARTMENT OF COMMERCE
United States Patent and Trademark Office
Address: COMMISSIONER FOR PATENTS
P.O. Box 1450
Alexandria, Virginia 22313-1450
www.uspto.gov

APPLICATION NUMBER	FILING OR 371(C) DATE	FIRST NAMED APPLICANT	ATTY. DOCKET NO./TITLE
11/146,367	06/06/2005	Armen P. Sarvazyan	AL-11

CONFIRMATION NO. 5486

26299
BORIS LESCHINSKY
P.O. BOX 72
WALDWICK, NJ 07463

NONPUBLICATION RESCISSION LETTER

OC000000029982324

Date Mailed: 05/19/2008

Communication Regarding Rescission Of Nonpublication Request and/or Notice of Foreign Filing

Applicant's rescission of the previously-filed nonpublication request and/or notice of foreign filing is acknowledged. The paper has been reflected in the Patent and Trademark Office's (USPTO's) computer records so that the earliest possible projected publication date can be assigned.

The projected publication date is 08/28/2008.

If applicant rescinded the nonpublication request before or on the date of "foreign filing,"[1] then no notice of foreign filing is required.

If applicant foreign filed the application after filing the above application and before filing the rescission, and the rescission did not also include a notice of foreign filing, then a notice of foreign filing (not merely a rescission) is required to be filed within 45 days of the date of foreign filing. See 35 U.S.C. § 122(b)(2)(B)(iii), and Clarification of the United States Patent and Trademark Office's Interpretation of the Provisions of 35 U.S.C. § 122(b)(2)(B)(ii)-(iv), 1272 Off. Gaz. Pat. Office 22 (July 1, 2003).

If a notice of foreign filing is required and is not filed within 45 days of the date of foreign filing, then the application becomes abandoned pursuant to 35 U.S.C. § 122(b)(2)(B)(iii). In this situation, applicant should either file a petition to revive or notify the Office that the application is abandoned. See 37 CFR 1.137(f). Any such petition to revive will be forwarded to the Office of Petitions for a decision. Note that the filing of the petition will not operate to stay any period of reply that may be running against the application.

Questions regarding petitions to revive should be directed to the Office of Petitions at (571) 272-3282.

[1] Note, for purpose of this notice, that "foreign filing" means "filing an application directed to the same invention in another country, or under a multilateral international agreement, that requires publication of applications 18 months after filing".

/pffaison ball/

Office of Data Management, Application Assistance Unit (571) 272-4000, or (571) 272-4200, or 1-888-786-0101

UNITED STATES PATENT AND TRADEMARK OFFICE

Commissioner for Patents
United States Patent and Trademark Office
P.O. Box 1450
Alexandria, VA 22313-1450
www.uspto.gov

MALLINCKRODT INC.
675 MCDONNELL BOULEVARD
P.O. BOX 5840
ST. LOUIS, MO 63134

COPY MAILED

AUG 18 2005

OFFICE OF PETITIONS

In re Application of :
Achilefu, et al. :
Application No. 11/146,377 :
Filed: June 6, 2005 :
Attorney Docket No. 1448.4 US :

ON PETITION

This is a decision on papers styled, "Petition Regarding Submission of Fig. 13," filed on August 3, 2005, which is being treated as a petition under 37 CFR 1.53, requesting that the above-identified application be accorded a filing date of June 6, 2005, including Figure 13 described in the specification.

The application was submitted on June 6, 2005, as a divisional of prior application No. 11/075,792. However, on July 8, 2005, the Office of Initial Patent Examination (OIPE) mailed a "Notice To File Missing Parts of Nonprovisional Application" (Notice) that stated the application had been accorded a filing date, and that, among other items, Figure 13 described in the specification appears to have been omitted.

In response, on August 3, 2005, the instant petition was submitted. Petitioner requests that the missing Figures be incorporated by reference from prior application No. 11/075,792. A petition, however, is not required for such action.

The application transmittal letter identified this application as a divisional application of prior application No. 11/075,792, filed March 9, 2005, and specifically incorporated by reference the disclosure of the prior application. MPEP 201.06(c) states:

> "B. Application Entitled to a Filing Date
> If a continuation or divisional application as originally filed is entitled to a filing date despite the omission of a portion of the prior application(s), applicant will be permitted to add the omitted material by way of an amendment provided a statement was included in the application as originally filed that incorporates by reference the prior application(s). If the application as originally filed includes a proper incorporation by reference of the prior application(s), an omitted specification page(s) and/or drawing figure(s) identified in a "Notice of Omitted Item(s)" may be added by amendment provided the omitted item(s) contains only subject matter in common with such prior application(s). In such

> case, applicant need not respond to the "Notice of Omitted Item(s)." Applicant should submit the amendment adding the omitted material prior to the first Office action to avoid delays in the prosecution of the application. See MPEP 601.01(d) and 601.01(g)."

If applicants desire that Figure 13 described in the specification be added to the application, the appropriate procedure is by way of amendment requesting the entry of the Figure. Any such amendment should be filed prior to the first action on the merits and will be considered by the primary examiner.

Accordingly, the petition is dismissed.

Please note, the petition fee will not be refunded, since the petition was not necessitated by any error on the part of the USPTO.

The application will be forwarded to the Office of Initial Patent Examination for further processing.

Telephone inquiries should be directed to the undersigned at (571) 272-3228.

Edward J. Tannouse
Petitions Attorney
Office of Petitions
Office of the Deputy Commissioner
for Patent Examination Policy

UNITED STATES PATENT AND TRADEMARK OFFICE

UNITED STATES DEPARTMENT OF COMMERCE
United States Patent and Trademark Office
Address: COMMISSIONER FOR PATENTS
P.O. Box 1450
Alexandria, Virginia 22313-1450
www.uspto.gov

HEIMLICH LAW
5952 DIAL WAY
SAN JOSE, CA 95129

Mail Date: 04/20/2010

Applicant	: Russell T. Nakano	: DECISION ON REQUEST FOR
Patent Number	: 7664173	: RECALCULATION of PATENT
Issue Date	: 02/16/2010	: TERM ADJUSTMENT IN VIEW
Appliction No	: 11/146,380	: OF WYETH AND NOTICE OF INTENT TO
Filed	: 06/06/2005	: ISSUE CERTIFICATE OF CORRECTION
		:

The Request for Recalculation is **GRANTED** to the extent indicated.

The patent term adjustment has been determined to be **1243** days. The USPTO will *sua sponte* issue a certificate of correction reflecting the amount of PTA days determined by the recalculation.

Prior to the issuance of the certificate of correction, the USPTO will afford patentee an opportunity to be heard and request reconsideration. Accordingly, patentee has **one month or thirty (30) days**, whichever is longer, to file a request for reconsideration of this patent term adjustment calculation. See 35 U.S.C. 154(b)(3)(B)(ii) and 37 CFR 1.322(a)(4). No extensions of time will be granted under 37 CFR 1.136.

Patentee should use document code PET.OP if electronically filing a request for reconsideration of this patent term adjustment calculation. The patentee must also include the information required by 37 CFR 1.705(b)(2) and the fee required by 37 CFR 1.18(e). If patentee does not file a timely request for reconsideration of this patent term adjustment calculation including the information required by 37 CFR 1.705(b)(2) and the fee required by 37 CFR 1.18(e), the USPTO will issue a certificate of correction reflecting the PTA determination noted above.

Patentee should be aware that in order to preserve the right to review in the United States District Court for the District of Columbia of the USPTO patent term adjustment determination, patentee must ensure that he or she also take the steps required under 35 U.S.C. 154(b)(4)(A) in a timely manner. Nothing in the request for recalculation should be construed as providing an alternative time frame for commencing a civil action under 35 U.S.C. 154(b)(4)(A).

Any questions concerning this decision should be directed to the Office of Patent Legal Administration at 571-272-7702.

UNITED STATES PATENT AND TRADEMARK OFFICE

COMMISSIONER FOR PATENTS
UNITED STATES PATENT AND TRADEMARK OFFICE
P.O. BOX 1450
ALEXANDRIA, VA 22313-1450
www.uspto.gov

JONDLE & ASSOCIATES P.C.
858 HAPPY CANYON ROAD SUITE 230
CASTLE ROCK CO 80108

COPY MAILED
AUG 15 2007
OFFICE OF PETITIONS

Applicant: Kobold, et al.
Application No. 11/146,392
Filed: June 6, 2005
For: METHOD FOR OBTAINING A PLANT WITH A LASTING RESISTANCE TO A PATHOGEN
Attorney Docket No: 1458-007DIV1
Pub. No.: US 2006/0005272 A1
Pub. Date: January 5, 2006

This is a decision on the request for corrected patent applications publication under 37 CFR 1.221 (b), filed on April 20, 2006 for the above-identified application.

The request is DISMISSED.

The instant request is that the application be republished because the international application information was not taken off of the signed Declaration.

37 CFR 1.221 (b) is applicable "only when the Office makes a material mistake which is apparent from Office records.... Any request for a corrected publication or revised patent application publication other than provided as provided in paragraph (a) of this section must be filed within **two months** from the date of the patent application publication. This period is not extendable." A material mistake must affect the public's ability to appreciate the technical disclosure of the patent application publication, to determine the scope of the patent application publication, or to determine the scope of the provisional rights that an applicant may seek to enforce upon issuance of a patent. [1]

The request for corrected publication, received on April 20, 2006, was not timely filed under 37 CFR 1.221(b).

The Office did not make any material mistakes in the publication of the patent application. The foreign priority claim is printed on the first page of the publication. Under MPEP 1130, applicants should not file a request for a corrected publication under 37 CFR 1.221(b) if the publication did not include changes submitted in a timely amendment.

[1] Changes to Implement Eighteen-Month Publication of Patent Applications, 65 FR 57023, 57038 (Sept. 20, 2000), 1239, Off. Gaz. Pat. Office Notices 63, 75 (Oct. 10, 2000) (final rule).

It is noted that the benefit claim was amended by an amendment on April 20, 2006, the original benefit claim in the preliminary amendment filed on June 6, 2005 is to a different application. To make a benefit/priority claim, 37 CFR 1.78 in summary requires that the benefit claim to an earlier filed application be contained in the first sentence of the application or be submitted in an amendment or application data sheet within the required time frame within the later of **four months from the actual filing date** or the date on which the national stage commenced, **or sixteen months from the filing date of the prior-filed application.** According to 37 CFR 1.55, the priority claim must identify the foreign application and filing date, within the required time frame within the later of four months from the actual filing date or the date on which the national stage commenced, or sixteen months from the filing date of the prior-filed application. [2] Since a proper benefit claim to an earlier filed application was not made within the required time period, the benefit has been waived.

In order to make a late benefit claim to the earlier filed applications, applicant must submit a petition to accept an unintentionally delayed claim under 35 U.S.C. 119 and 120 for the benefit of the earlier filed applications. The petition must include 1) the surcharge ($1370) set forth in 37 CFR 1.14(t) and 2) a statement that the entire delay between the date the claim was due under paragraph (a)(5) of this section and the date the claim was filed was unintentional. The petition must also include a proper reference (amendment) to the prior applications in order for the petition to be granted.

Further correspondence with respect to this matter should be addressed as follows:

By fax: Attn: Petitions
(571) 273-8300

By mail: Mail Stop Petitions
Commissioner for Patents
P.O. Box 1450
Alexandria, VA 22313-1450

Inquiries relating to this matter may be directed to Mark Polutta at (571) 272-7709.

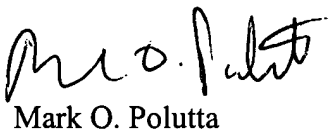

Mark O. Polutta
Senior Legal Advisor
Office of Patent Legal Administration
Office of the Deputy Commissioner
for Patent Examination Policy

[2] See Claiming the Benefit of a Prior-Filed Application under 35 U.S.C. §§ 119(e), 120, 121, and 365(c), 1268 Off. Gaz. Pat. Office Notices 89 (March 18, 2003).

UNITED STATES PATENT AND TRADEMARK OFFICE

UNITED STATES DEPARTMENT OF COMMERCE
United States Patent and Trademark Office
Address: COMMISSIONER FOR PATENTS
P.O. Box 1450
Alexandria, Virginia 22313-1450
www.uspto.gov

MCANDREWS HELD & MALLOY, LTD
500 WEST MADISON STREET
SUITE 3400
CHICAGO, IL 60661

Mail Date: 05/04/2010

Applicant	: Joonsuk Kim	: DECISION ON REQUEST FOR
Patent Number	: 7643444	: RECALCULATION of PATENT
Issue Date	: 01/05/2010	: TERM ADJUSTMENT IN VIEW
Application No	: 11/146,394	: OF WYETH AND NOTICE OF INTENT TO
Filed	: 06/06/2005	: ISSUE CERTIFICATE OF CORRECTION
		:

The Request for Recalculation is **GRANTED** to the extent indicated.

The patent term adjustment has been determined to be **56** days. The USPTO will *sua sponte* issue a certificate of correction reflecting the amount of PTA days determined by the recalculation.

Prior to the issuance of the certificate of correction, the USPTO will afford patentee an opportunity to be heard and request reconsideration. Accordingly, patentee has **one month or thirty (30) days**, whichever is longer, to file a request for reconsideration of this patent term adjustment calculation. See 35 U.S.C. 154(b)(3)(B)(ii) and 37 CFR 1.322(a)(4). No extensions of time will be granted under 37 CFR 1.136.

Patentee should use document code PET.OP if electronically filing a request for reconsideration of this patent term adjustment calculation. The patentee must also include the information required by 37 CFR 1.705(b)(2) and the fee required by 37 CFR 1.18(e). If patentee does not file a timely request for reconsideration of this patent term adjustment calculation including the information required by 37 CFR 1.705(b)(2) and the fee required by 37 CFR 1.18(e), the USPTO will issue a certificate of correction reflecting the PTA determination noted above.

Patentee should be aware that in order to preserve the right to review in the United States District Court for the District of Columbia of the USPTO patent term adjustment determination, patentee must ensure that he or she also take the steps required under 35 U.S.C. 154(b)(4)(A) in a timely manner. Nothing in the request for recalculation should be construed as providing an alternative time frame for commencing a civil action under 35 U.S.C. 154(b)(4)(A).

Any questions concerning this decision should be directed to the Office of Patent Legal Administration at 571-272-7702.

UNITED STATES PATENT AND TRADEMARK OFFICE

Commissioner for Patents
United States Patent and Trademark Office
P.O. Box 1450
Alexandria, VA 22313-1450
www.uspto.gov

STERNE, KESSLER, GOLDSTEIN & FOX PLLC
1100 NEW YORK AVENUE, N.W.
WASHINGTON DC 20005

COPY MAILED

MAR 2 0 2006

OFFICE OF PETITIONS

In re Application of :
Guarnieri, et al :
Application No.: 11/146,417 :
Filed: June 7, 2005 :
Attorney Docket No.: 1866.0440001/PEG/CMB :
For: IDENTIFICATION OF LIGANDS FOR MACROMOLECULES

LETTER AND NOTICE OF ABANDONMENT

A petition under 37 CFR 1.47(a) was received in the United States Patent and Trademark Office (Office) on February 6, 2006.

A review of the file reveals that on July 6, 2005, the Office mailed a Notice to File Missing Parts of Nonprovisional Application to petitioner, which set forth a two (2) month period to submit the required payment of a $130.00 surcharge under 37 CFR 1.16(e), an executed oath or declaration, replacement drawings, and filing fees.

On February 6, 2006, a petition for a five month extension of time and required fee, filing fees, the late declaration surcharge, a partially executed declaration, and a Rule 47 petition and required petition fee were filed. A declaration of facts of Attorney Cynthia M. Bouchez, an attorney handling this application, accompanied the petition.

Although petitioners filed a petition under 37 CFR 1.47(a) on February 6, 2006, petitioners were not relieved of the requirement to submit a timely and complete reply to the Notice to File Missing Parts of Nonprovisional Application. Section 1.135(b) of the Code of Federal Regulations states, in relevant part: "Prosecution of an application to save it from abandonment pursuant to paragraph (a) of this section must include such complete and proper reply as the condition of the application may require." Petitioners failed to file replacement drawings prior to the maximum extendable period for response.

Because petitioners failed to submit a timely and proper reply to the Notice prior to February 6, 2006 within the meaning of 37 CFR 1.135(b), **this application is properly held abandoned as of February 7, 2006.**

Under the circumstances of this application, petitioner must file a petition to revive under 37 CFR 1.137 and pay the proper petition fee within **ONE (1) month** of this decision before the petition under 37 CFR 1.47 may be addressed on its merits. No extensions of time are permissible. Unless petitioners can demonstrate that petitioners were "unavoidably" prevented from submitting a complete reply to the Notice, a petition under 37 CFR 1.137(b) is suggested. The petition under 37 CFR 1.47 will remain in the file until such time as petitioners have filed a grantable petition to revive under 37 CFR 1.137.

Further correspondence with respect to this matter should be addressed as follows:

By mail:
Mail Stop PETITION
Commissioner for Patents
Post Office Box 1450
Alexandria, VA 22313-1450

By hand:
U.S. Patent and Trademark Office
Customer Service Window, Mail Stop Petition
Randolph Building
401 Dulany Street
Alexandria, VA 22314

By FAX: (571) 273-8300 - ATTN: Office of Petitions

Telephone inquiries should be directed to the undersigned at (571) 272-3230.

E. Shirene Willis

E. Shirene Willis
Senior Petitions Attorney
Office of Petitions
Office of the Deputy Commissioner
for Patent Examination Policy

UNITED STATES PATENT AND TRADEMARK OFFICE

Commissioner for Patents
United States Patent and Trademark Office
P.O. Box 1450
Alexandria, VA 22313-1450
www.uspto.gov

STERNE, KESSLER, GOLDSTEIN & FOX PLLC
1100 NEW YORK AVENUE, N.W.
WASHINGTON DC 20005

COPY MAILED

JUL 03 2006

OFFICE OF PETITIONS

In re Application of :
Guarnieri, et al : ON PETITION
Application No.: 11/146,417 :
Filed: June 7, 2005 :
Attorney Docket No.: 1866.0440001/PEG/CMB :
For: IDENTIFICATION OF LIGANDS FOR MACROMOLECULES

This is in response to the petition under 37 CFR 1.47(a), filed February 6, 2006 and the petition under 37 CFR 1.137(b), filed April 20, 2006, to revive the above-identified application.

The petition under 37 CFR 1.137(b) is **GRANTED.**

The petition under 37 CFR 1.47(a) is **GRANTED.**

A review of the file reveals that on July 6, 2005, the Office mailed a Notice to File Missing Parts of Nonprovisional Application to petitioners, which set forth a two (2) month period to submit the required payment of a $130.00 surcharge under 37 CFR 1.16(e), an executed oath or declaration, replacement drawings, and filing fees.

On February 6, 2006, a petition for a five month extension of time and required fee, filing fees, the late declaration surcharge, a partially executed declaration, and a Rule 47 petition and required petition fee were filed. A declaration of facts of Attorney Cynthia M. Bouchez, an attorney handling this application, accompanied the petition.

Although petitioners filed a petition under 37 CFR 1.47(a) on February 6, 2006, petitioners were not relieved of the requirement to submit a timely and complete reply to the Notice to File Missing Parts of Nonprovisional Application. Section 1.135(b) of the Code of Federal Regulations states, in relevant part: "Prosecution of an application to save it from abandonment pursuant to paragraph (a) of this section must include such complete and proper reply as the condition of the application may require." Petitioners failed to file replacement drawings prior

to the maximum extendable period for response. The application became abandoned on February 7, 2006.

Petitioners have filed a proper reply to the July 6, 2005 Notice in the form of replacement drawings, an acceptable statement of the unintentional nature of the delay in responding to the July 6, 2005 Notice, and the petition fee. Accordingly, the petition under 37 CFR 1.137(b) is granted

With respect to the petition under 37 CFR 1.47(a), petitioners have shown that the non-signing inventor, Frank Guarnieri, has constructively refused to join in the filing of the above-identified application. The statement of facts of Attorney Cynthia M. Bouchez establishes that Mr. Guarnieri received, *inter alia*, a copy of the application and declaration, but did not return an executed declaration. Previously, Mr. Guarnieri stated that he would not sign any documents for his former employer without additional compensation. Petitioners have submitted a declaration in compliance with 37 CFR 1.63 and 1.64.

The application and papers have been reviewed and found in compliance with 37 CFR 1.47(a). This application is hereby accorded Rule 1.47(a) status.

As provided in 37 CFR 1.47(c), this Office will forward notice of this application's filing to the non-signing inventor at the address given in the petition. Notice of the filing of this application will also be published in the Official Gazette.

After the mailing of this decision, the application will be returned to the Office of Initial Patent Examination for further processing.

Telephone inquiries regarding this decision should be directed to the undersigned at (571) 272-3230.

Shirene Willis Brantley

Shirene Willis Brantley
Senior Petitions Attorney
Office of Petitions
Office of the Deputy Commissioner
for Patent Examination Policy

UNITED STATES PATENT AND TRADEMARK OFFICE

Commissioner for Patents
United States Patent and Trademark Office
P.O. Box 1450
Alexandria, VA 22313-1450
www.uspto.gov

FRANK GUARNIERI
1742 W. ELEVENTH ST.
BROOKLYN, NY 11223-1142

In re Application of Guarnieri, et al Application No.: 11/146,417 Filed: June 7, 2005 Attorney Docket No.: 1866.0440001/PEG/CMB For: IDENTIFICATION OF LIGANDS FOR MACROMOLECULES	: : : : :	LETTER

COPY MAILED
JUL 03 2006
OFFICE OF PETITIONS

Dear Mr. Guarnieri:

You are named as a joint inventor in the above identified United States patent application, filed under the provisions of 35 U.S.C. 116 (United States Code), and 37 CFR 1.47(a), Rules of Practice in Patent Cases. Should a patent be granted on the application you will be designated therein as a joint inventor.

As a named inventor you are entitled to inspect any paper in the file wrapper of the application, order copies of all or any part thereof (at a prepaid cost per 37 CFR 1.19) or make your position of record in the application. Alternatively, you may arrange to do any of the preceding through a registered patent attorney or agent presenting written authorization from you. If you care to join the application, counsel of record (see below) would presumably assist you. Joining in the application would entail the filing of an appropriate oath or declaration by you pursuant to 37 CFR 1.63.

Requests for information regarding your application should be directed to the File Information Unit at (703)308-2733. Information regarding how to pay for and order a copy of the application, or a specific paper in the application, should be directed to Certification Division at (703)308-9726 or 1(800)972-6382 (outside the Washington D.C. area).

Telephone inquiries regarding this communication should be directed to the undersigned at (571) 272-3230.

Shirene Willis Brantley
Senior Petitions Attorney
Office of Petitions

ATTORNEY OF RECORD: STERNE, KESSLER, GOLDSTEIN & FOX PLLC
1100 NEW YORK AVENUE, N.W.
WASHINGTON DC 20005

UNITED STATES PATENT AND TRADEMARK OFFICE

COMMISSIONER FOR PATENTS
UNITED STATES PATENT AND TRADEMARK OFFICE
P.O. BOX 1450
ALEXANDRIA, VA 22313-1450
www.uspto.gov

WOODCOCK WASHBURN LLP
CIRA CENTRE, 12TH FLOOR
2929 ARCH STREET
PHILADELPHIA PA 19104-2891

MAILED

APR 09 2010

OFFICE OF PETITIONS

In re Application of	:	
Marvin Young	:	
Application No. 11/146,436	:	DECISION ON PETITION
Filed: June 6, 2005	:	
Attorney Docket No. IVPD-0063	:	

This is a decision on the petition under 37 CFR 1.181, filed December 17, 2009, requesting correction of an omission in the domestic priority data (claim to priority to provisional application No. 60/386,084) which occurred through PTO error. Applicant further requests that provisional application No. 60/386,084 be reinstated as a separate provisional application.

The petition is **GRANTED**.

No fee is required and no fee has been charged.

Petitioner argues that due to PTO error, provisional application No. 60/386,084 was erroneously converted by the Patent Office to non-provisional application No. 10/454,774 and the contents of 60/386,084 were vacated. Consequently, priority to 60/386,084 was denied to the present application because the provisional application was no longer available on PTO records.

The record has been reviewed and it is concluded that the relief requested is warranted[1]. The Office erred in deactivating the provisional application. Receipt of the resubmission of the provisional application filing fee, as requested, on February 3, 2010 is acknowledged. The provisional application No. 60/386,084, with a filing date of June 4, 2002, has been reactivated. On February 18, 2010, the Office of Patent

[1] It is noted that no decision was actually issued by the undersigned on July 3, 2003. Rather, the application was referred to OIPE for action on the request under 1.182 for a later filing date.

Application Processing, formerly OIPE, issued a corrected filing receipt reflecting the restoration of the provisional application.

Moreover, the omission in the domestic priority data has been corrected. The claim to provisional application No. 60/386,084 under 35 U.S.C. 119(e) was properly made in the first sentence of the specification on filing of this application. Due to the error in deactivating the provisional application, this application did not reflect the priority claim. This application as filed also included a proper domestic claim to intermediate application No. 10/454,774. Thus, the claim to the provisional application is both timely and proper. A corrected Filing Receipt, which includes the priority claim to the provisional application, accompanies this decision on petition.

This application stands abandoned. No further action is required.

Any questions concerning this matter may be directed to Nancy Johnson, Senior Petitions Attorney, at (571) 272-3219.

Nancy Johnson
Senior Petitions Attorney
Office of Petitions

ATTACHMENT : Corrected Filing Receipt

UNITED STATES PATENT AND TRADEMARK OFFICE

UNITED STATES DEPARTMENT OF COMMERCE
United States Patent and Trademark Office
Address: COMMISSIONER FOR PATENTS
P.O. Box 1450
Alexandria, Virginia 22313-1450
www.uspto.gov

APPLICATION NUMBER	FILING or 371(c) DATE	GRP ART UNIT	FIL FEE REC'D	ATTY.DOCKET.NO	TOT CLAIMS	IND CLAIMS
11/146,436	06/06/2005	2881	2650	IVPD-0063	37	7

CONFIRMATION NO. 9755

CORRECTED FILING RECEIPT

23377
WOODCOCK WASHBURN LLP
CIRA CENTRE, 12TH FLOOR
2929 ARCH STREET
PHILADELPHIA, PA 19104-2891

OC000000041030535

Date Mailed: 04/08/2010

Receipt is acknowledged of this non-provisional patent application. The application will be taken up for examination in due course. Applicant will be notified as to the results of the examination. Any correspondence concerning the application must include the following identification information: the U.S. APPLICATION NUMBER, FILING DATE, NAME OF APPLICANT, and TITLE OF INVENTION. Fees transmitted by check or draft are subject to collection. Please verify the accuracy of the data presented on this receipt. **If an error is noted on this Filing Receipt, please submit a written request for a Filing Receipt Correction. Please provide a copy of this Filing Receipt with the changes noted thereon. If you received a "Notice to File Missing Parts" for this application, please submit any corrections to this Filing Receipt with your reply to the Notice. When the USPTO processes the reply to the Notice, the USPTO will generate another Filing Receipt incorporating the requested corrections**

Applicant(s)

Marvin R. Young, Richardson, TX;

Assignment For Published Patent Application

Celion Networks Inc., Richardson, TX

Power of Attorney: The patent practitioners associated with Customer Number 23377

Domestic Priority data as claimed by applicant

This application is a CON of 10/454,774 06/03/2003 PAT 6,920,277
which claims benefit of 60/386,084 06/04/2002

Foreign Applications

If Required, Foreign Filing License Granted: 06/30/2005

The country code and number of your priority application, to be used for filing abroad under the Paris Convention, is **US 11/146,436**

Projected Publication Date: Not Applicable

Non-Publication Request: No

Early Publication Request: No

Title

Optical bypass method and architecture

Preliminary Class

385

PROTECTING YOUR INVENTION OUTSIDE THE UNITED STATES

Since the rights granted by a U.S. patent extend only throughout the territory of the United States and have no effect in a foreign country, an inventor who wishes patent protection in another country must apply for a patent in a specific country or in regional patent offices. Applicants may wish to consider the filing of an international application under the Patent Cooperation Treaty (PCT). An international (PCT) application generally has the same effect as a regular national patent application in each PCT-member country. The PCT process **simplifies** the filing of patent applications on the same invention in member countries, but **does not result** in a grant of "an international patent" and does not eliminate the need of applicants to file additional documents and fees in countries where patent protection is desired.

Almost every country has its own patent law, and a person desiring a patent in a particular country must make an application for patent in that country in accordance with its particular laws. Since the laws of many countries differ in various respects from the patent law of the United States, applicants are advised to seek guidance from specific foreign countries to ensure that patent rights are not lost prematurely.

Applicants also are advised that in the case of inventions made in the United States, the Director of the USPTO must issue a license before applicants can apply for a patent in a foreign country. The filing of a U.S. patent application serves as a request for a foreign filing license. The application's filing receipt contains further information and guidance as to the status of applicant's license for foreign filing.

Applicants may wish to consult the USPTO booklet, "General Information Concerning Patents" (specifically, the section entitled "Treaties and Foreign Patents") for more information on timeframes and deadlines for filing foreign patent applications. The guide is available either by contacting the USPTO Contact Center at 800-786-9199, or it can be viewed on the USPTO website at http://www.uspto.gov/web/offices/pac/doc/general/index.html.

For information on preventing theft of your intellectual property (patents, trademarks and copyrights), you may wish to consult the U.S. Government website, http://www.stopfakes.gov. Part of a Department of Commerce initiative, this website includes self-help "toolkits" giving innovators guidance on how to protect intellectual property in specific countries such as China, Korea and Mexico. For questions regarding patent enforcement issues, applicants may call the U.S. Government hotline at 1-866-999-HALT (1-866-999-4158).

LICENSE FOR FOREIGN FILING UNDER

Title 35, United States Code, Section 184

Title 37, Code of Federal Regulations, 5.11 & 5.15

GRANTED

The applicant has been granted a license under 35 U.S.C. 184, if the phrase "IF REQUIRED, FOREIGN FILING LICENSE GRANTED" followed by a date appears on this form. Such licenses are issued in all applications where the conditions for issuance of a license have been met, regardless of whether or not a license may be required as

set forth in 37 CFR 5.15. The scope and limitations of this license are set forth in 37 CFR 5.15(a) unless an earlier license has been issued under 37 CFR 5.15(b). The license is subject to revocation upon written notification. The date indicated is the effective date of the license, unless an earlier license of similar scope has been granted under 37 CFR 5.13 or 5.14.

This license is to be retained by the licensee and may be used at any time on or after the effective date thereof unless it is revoked. This license is automatically transferred to any related applications(s) filed under 37 CFR 1.53(d). This license is not retroactive.

The grant of a license does not in any way lessen the responsibility of a licensee for the security of the subject matter as imposed by any Government contract or the provisions of existing laws relating to espionage and the national security or the export of technical data. Licensees should apprise themselves of current regulations especially with respect to certain countries, of other agencies, particularly the Office of Defense Trade Controls, Department of State (with respect to Arms, Munitions and Implements of War (22 CFR 121-128)); the Bureau of Industry and Security, Department of Commerce (15 CFR parts 730-774); the Office of Foreign AssetsControl, Department of Treasury (31 CFR Parts 500+) and the Department of Energy.

NOT GRANTED

No license under 35 U.S.C. 184 has been granted at this time, if the phrase "IF REQUIRED, FOREIGN FILING LICENSE GRANTED" DOES NOT appear on this form. Applicant may still petition for a license under 37 CFR 5.12, if a license is desired before the expiration of 6 months from the filing date of the application. If 6 months has lapsed from the filing date of this application and the licensee has not received any indication of a secrecy order under 35 U.S.C. 181, the licensee may foreign file the application pursuant to 37 CFR 5.15(b).

UNITED STATES PATENT AND TRADEMARK OFFICE

UNITED STATES DEPARTMENT OF COMMERCE
United States Patent and Trademark Office
Address: COMMISSIONER FOR PATENTS
P.O. Box 1450
Alexandria, Virginia 22313-1450
www.uspto.gov

APPL NO.	FILING OR 371 (c) DATE	ART UNIT	FIL FEE REC'D	ATTY.DOCKET NO	DRAWINGS	TOT CLMS	IND CLMS
11/146,445	06/07/2005	3682	1230	17393-US	1	22	3

CONFIRMATION NO. 5402

CORRECTED FILING RECEIPT

OC000000019768369

30689
DEERE & COMPANY
ONE JOHN DEERE PLACE
MOLINE, IL 61265

Date Mailed: 07/26/2006

Receipt is acknowledged of this regular Patent Application. It will be considered in its order and you will be notified as to the results of the examination. Be sure to provide the U.S. APPLICATION NUMBER, FILING DATE, NAME OF APPLICANT, and TITLE OF INVENTION when inquiring about this application. Fees transmitted by check or draft are subject to collection. Please verify the accuracy of the data presented on this receipt. **If an error is noted on this Filing Receipt, please mail to the Commissioner for Patents P.O. Box 1450 Alexandria Va 22313-1450. Please provide a copy of this Filing Receipt with the changes noted thereon. If you received a "Notice to File Missing Parts" for this application, please submit any corrections to this Filing Receipt with your reply to the Notice. When the USPTO processes the reply to the Notice, the USPTO will generate another Filing Receipt incorporating the requested corrections (if appropriate).**

Applicant(s)

Jordan Eric Gutowski, Elk Grove Village, IL;
Philip David Cox, Polk City, IA;
Jarrod Ray Ruckle, Bondurant, IA;
James Franklin Bierl, West Des Moines, IA;

Power of Attorney:

Duane Coordes--27531

Domestic Priority data as claimed by applicant

Foreign Applications

If Required, Foreign Filing License Granted: 07/01/2005

The country code and number of your priority application, to be used for filing abroad under the Paris Convention, is US11/146,445

Projected Publication Date: 12/07/2006

Non-Publication Request: No

Early Publication Request: No

Title

Bearing seal assembly for agricultural applications

Preliminary Class

384

PROTECTING YOUR INVENTION OUTSIDE THE UNITED STATES

Since the rights granted by a U.S. patent extend only throughout the territory of the United States and have no effect in a foreign country, an inventor who wishes patent protection in another country must apply for a patent in a specific country or in regional patent offices. Applicants may wish to consider the filing of an international application under the Patent Cooperation Treaty (PCT). An international (PCT) application generally has the same effect as a regular national patent application in each PCT-member country. The PCT process **simplifies** the filing of patent applications on the same invention in member countries, but **does not result** in a grant of "an international patent" and does not eliminate the need of applicants to file additional documents and fees in countries where patent protection is desired.

Almost every country has its own patent law, and a person desiring a patent in a particular country must make an application for patent in that country in accordance with its particular laws. Since the laws of many countries differ in various respects from the patent law of the United States, applicants are advised to seek guidance from specific foreign countries to ensure that patent rights are not lost prematurely.

Applicants also are advised that in the case of inventions made in the United States, the Director of the USPTO must issue a license before applicants can apply for a patent in a foreign country. The filing of a U.S. patent application serves as a request for a foreign filing license. The application's filing receipt contains further information and guidance as to the status of applicant's license for foreign filing.

Applicants may wish to consult the USPTO booklet, "General Information Concerning Patents" (specifically, the section entitled "Treaties and Foreign Patents") for more information on timeframes and deadlines for filing foreign patent applications. The guide is available either by contacting the USPTO Contact Center at 800-786-9199, or it can be viewed on the USPTO website at http://www.uspto.gov/web/offices/pac/doc/general/index.html.

For information on preventing theft of your intellectual property (patents, trademarks and copyrights), you may wish to consult the U.S. Government website, http://www.stopfakes.gov. Part of a Department of Commerce initiative, this website includes self-help "toolkits" giving innovators guidance on how to protect intellectual property in specific countries such as China, Korea and Mexico. For questions regarding patent enforcement issues, applicants may call the U.S. Government hotline at 1-866-999-HALT (1-866-999-4158).

LICENSE FOR FOREIGN FILING UNDER
Title 35, United States Code, Section 184
Title 37, Code of Federal Regulations, 5.11 & 5.15

GRANTED

The applicant has been granted a license under 35 U.S.C. 184, if the phrase "IF REQUIRED, FOREIGN FILING LICENSE GRANTED" followed by a date appears on this form. Such licenses are issued in all applications where the conditions for issuance of a license have been met, regardless of whether or not a license may be required as set forth in 37 CFR 5.15. The scope and limitations of this license are set forth in 37 CFR 5.15(a) unless an earlier license has been issued under 37 CFR 5.15(b). The license is subject to revocation upon written notification. The date indicated is the effective date of the license, unless an earlier license of similar scope has been granted under 37 CFR 5.13 or 5.14.

This license is to be retained by the licensee and may be used at any time on or after the effective date thereof unless it is revoked. This license is automatically transferred to any related applications(s) filed under 37 CFR

1.53(d). This license is not retroactive.

The grant of a license does not in any way lessen the responsibility of a licensee for the security of the subject matter as imposed by any Government contract or the provisions of existing laws relating to espionage and the national security or the export of technical data. Licensees should apprise themselves of current regulations especially with respect to certain countries, of other agencies, particularly the Office of Defense Trade Controls, Department of State (with respect to Arms, Munitions and Implements of War (22 CFR 121-128)); the Bureau of Industry and Security, Department of Commerce (15 CFR parts 730-774); the Office of Foreign Assets Control, Department of Treasury (31 CFR Parts 500+) and the Department of Energy.

NOT GRANTED

No license under 35 U.S.C. 184 has been granted at this time, if the phrase "IF REQUIRED, FOREIGN FILING LICENSE GRANTED" DOES NOT appear on this form. Applicant may still petition for a license under 37 CFR 5.12, if a license is desired before the expiration of 6 months from the filing date of the application. If 6 months has lapsed from the filing date of this application and the licensee has not received any indication of a secrecy order under 35 U.S.C. 181, the licensee may foreign file the application pursuant to 37 CFR 5.15(b).

UNITED STATES PATENT AND TRADEMARK OFFICE

Commissioner for Patents
United States Patent and Trademark Office
P.O. Box 1450
Alexandria, VA 22313-1450
www.uspto.gov

Steven B. Samuels
Woodcock, Washburn, LLP
CIRA Centre, 12th Floor
2929 Arch Street
Philadelphia, PA 19104-2891

COPY MAILED

MAY 09 2007

OFFICE OF PETITIONS

In re Application of	:	
Jeffrey D. Ullman et al.	:	
Application No. 11/146,515	:	DECISION ON PETITION
Filed: June 7, 2005	:	TO WITHDRAW
Attorney Docket No. GRAD-0006	:	FROM RECORD
	:	

This is a decision on the Request to Withdraw as attorney or agent of record under 37 C.F.R. § 1.36(b), filed February 28, 2007.

The request is **NOT APPROVED** as moot.

A review of the file record indicates that the power of attorney to Steven B. Samuels and all attorneys/agents associated with customer number 23377 has been revoked by the assignee of the patent application on March 9, 2007. Accordingly, the request to withdraw under 37 C.F.R. § 1.36(b) is moot.

All future communications from the Office will continue to be directed to the below-listed address until otherwise notified by applicant.

There are no pending office actions at this time.

Telephone inquires concerning this decision should be directed to Kimberly Inabinet at 571-272- 4618.

Frances Hicks
Petitions Examiner
Office of Petitions

cc: Peter M. Ullman
P.O. Box 6764
Lawrenceville, NJ 08648-0764

UNITED STATES PATENT AND TRADEMARK OFFICE

UNITED STATES DEPARTMENT OF COMMERCE
United States Patent and Trademark Office
Address: COMMISSIONER FOR PATENTS
P.O. Box 1450
Alexandria, Virginia 22313-1450
www.uspto.gov

APPLICATION NUMBER	FILING OR 371 (c) DATE	FIRST NAMED APPLICANT	ATTY. DOCKET NO./TITLE
11/146,515	06/07/2005	Jeffrey D. Ullman	GRAD-0006

CONFIRMATION NO. 5282

OC000000023759365

23377
WOODCOCK WASHBURN LLP
CIRA CENTRE, 12TH FLOOR
2929 ARCH STREET
PHILADELPHIA, PA 19104-2891

Date Mailed: 05/08/2007

NOTICE REGARDING CHANGE OF POWER OF ATTORNEY

This is in response to the Power of Attorney filed 03/09/2007.

- The Power of Attorney to you in this application has been revoked by the assignee who has intervened as provided by 37 CFR 3.71. Future correspondence will be mailed to the new address of record(37 CFR 1.33).

Kimberly Gravinot

Office of Initial Patent Examination (571) 272-4000, or 1-800-PTO-9199

FORMER ATTORNEY/AGENT COPY

UNITED STATES PATENT AND TRADEMARK OFFICE

Commissioner for Patents
United States Patent and Trademark Office
P.O. Box 1450
Alexandria, VA 22313-1450
www.uspto.gov

TRANSPACIFIC LAW GROUP
617 NORTH DELAWARE STREET
SAN MATEO CA 94401

COPY MAILED

MAY 23 2007

OFFICE OF PETITIONS

In re Application of

HWANG, Ing-Shouh et al.
Application No. 11/146,517
Filed: June 06, 2005
Attorney Docket No. **CQ10303**

DECISION ON PETITION TO WITHDRAW FROM RECORD

This is a decision on the Request to Withdraw as attorney or agent of record under 37 C.F.R. § 1.36(b), filed February 22, 2007.

The request is **NOT APPROVED**.

A grantable request to withdraw as attorney/agent of record must be signed by every attorney/agent seeking to withdraw or contain a clear indication that one attorney is signing on behalf of another/others. A request to withdraw will not be approved unless at least 30 (thirty) days would remain between the date of approval and the later of the expiration date of a time to file a response or the expiration date of the maximum time period which can be extended under 37 C.F.R. § 1.136(a).

The request cannot be approved because no reasons for withdrawal have been provided. The Office cannot, at this time, determine whether practitioner's request is one of the mandatory or permissive reasons enumerated in 37 CFR 10.40. Any subsequent requests must include reasons for withdrawal. Please note that there is a space provided for on PTO/SB/83 (Request to Withdraw as Attorney or Agent) to supply practitioner's reasons.

All future communications from the Office will continue to be directed to the above-listed address until otherwise notified by applicant.

Telephone inquiries concerning this decision should be directed to Michelle R. Eason at 571-272- 4231.

Terri Williams
Petitions Examiner
Office of Petitions

cc: **VENABLE LLP**
RAYMOND J. HO
575 7TH STREET NW
WASHINGTON, DC 20004-1601

UNITED STATES PATENT AND TRADEMARK OFFICE

Commissioner for Patents
United States Patent and Trademark Office
P.O. Box 1450
Alexandria, VA 22313-1450
www.uspto.gov

FOLEY & LARDNER LLP
P.O. BOX 80278
SAN DIEGO CA 92138-0278

COPY MAILED

JUN 25 2007

OFFICE OF PETITIONS

In re Application of	:	
GUO, et al.	:	
Application No. 11/146,518	:	DECISION ON PETITION
Filed: June 6, 2005	:	TO WITHDRAW
Attorney Docket No. **532732000102**	:	FROM RECORD
	:	

This is a decision on the Request to Withdraw as attorney or agent under 37 C.F.R. § 1.36(b) or 37 C.F.R. § 10.40 filed January 10, 2007.

The request is **NOT APPROVED**.

A review of the file record indicates that Peng Chen of MORRISON & FOERSTER LLP does not have power of attorney in this patent application nor is there any statement or evidence of record of employment in or otherwise being engaged in the proceedings in this patent application. Accordingly, the request to withdraw under 37 C.F.R. § 1.36(b) is not applicable.

All future communications from the Office will continue to be directed to the below-listed address until otherwise properly notified by the applicant.

Telephone inquires concerning this decision should be directed to the undersigned at 571-272-7253.

Monica A. Graves
Petitions Examiner
Office of Petitions

cc: **PENG CHEN**
MORRISON & FOERSTER LLP
1231 HIGH BLUFF DRIVE, SUITE 100
SAN DIEGO, CA 92130

UNITED STATES PATENT AND TRADEMARK OFFICE

Commissioner for Patents
United States Patent and Trademark Office
P.O. Box 1450
Alexandria, VA 22313-1450
www.uspto.gov

FOLEY & LARDNER LLP
P.O. BOX 80278
SAN DIEGO CA 92138-0278

COPY MAILED

MAY 23 2008

In re Application of	:	
GUO, et al.	:	
Application No. 11/146,518	:	DECISION ON PETITION
Filed: June 6, 2005	:	TO WITHDRAW
Attorney Docket No. **22163-003003**	:	FROM RECORD
	:	

This is a decision on the Request to Withdraw as attorney or agent of record under 37 C.F.R. § 1.36(b), filed March 19, 2008.

The request is **NOT APPROVED**.

A grantable request to withdraw as attorney/agent of record must be signed by every attorney/agent seeking to withdraw or contain a clear indication that one attorney is signing on behalf of another/others. A request to withdraw will not be approved unless at least 30 (thirty) days would remain between the date of approval and the later of the expiration date of a time to file a response or the expiration date of the maximum time period which can be extended under 37 C.F.R. § 1.136(a).

The Office cannot approve the request at this time since the reasons provided do not meet any of the conditions under the mandatory or permissive categories enumerated in 37 CFR 10.40. Section 10.40 of Title 37 of the Code of Federal Regulation states, "[a] practitioner shall not withdraw from employment in a proceeding before the Office without permission from the Office[.]" More specifically, 37 CFR 10.40 states, "[i]f paragraph (b) of this section is not applicable, a practitioner may not request permission to withdraw in matter pending before the Office unless such request or such withdrawal is" for one the permissive reasons listed in 37 CFR 10.40(c). The reason set forth in the request, "Foley & Lardner provided written notice of its intent to withdraw representation" does not meet any of the conditions set forth in 37 CFR 10.40.

All future communications from the Office will continue to be directed to the above-listed address until otherwise notified by applicant.

Telephone inquiries concerning this decision should be directed to the undersigned at 571-272- 7253.

MaGraves

Monica A. Graves
Petitions Examiner
Office of Petitions

cc: **MR. JOHNSON LIU**
22308 CARINLOCH STREET
CALABASSAS, CA 91302

UNITED STATES PATENT AND TRADEMARK OFFICE

Commissioner for Patents
United States Patent and Trademark Office
P.O. Box 1450
Alexandria, VA 22313-1450
www.uspto.gov

FOLEY & LARDNER LLP
P.O. BOX 80278
SAN DIEGO, CA 92138-0278

COPY MAILED

JUL 30 2008

OFFICE OF PETITIONS

In re Application of	:	
Yajum GUO, et al	:	
Application No. 11/146,518	:	DECISION ON PETITION
Filed: June 6, 2005	:	TO WITHDRAW
Attorney Docket No. 22163-003003	:	FROM RECORD
	:	

This is a decision on the Request to Withdraw as attorney or agent of record under 37 C.F.R. § 1.36(b), filed June 3, 2008.

The request is **NOT APPROVED**.

The Office cannot approve the request at this time since the reason provided does not meet any of the conditions under the mandatory or permissive categories enumerated in 37 CFR 10.40. Section 10.40 of Title 37 of the Code of Federal Regulation states, "a practitioner shall not withdraw from employment in a proceeding before the Office without permission from the Office." More specifically, 37 CFR 10.40 states, "if paragraph (b) of this section is not applicable, a practitioner may not request permission to withdraw in matter pending before the Office unless such request or such withdrawal is" for one the permissive reasons listed in 37 CFR 10.40(c). The reason set forth in the request, "Foley & Lardner provided written notice of its intent to withdraw representation, does not meet any of the conditions set forth in 37 CFR 10.40.

All future communications from the Office will continue to be directed to the above-listed address until otherwise notified by applicant.

Telephone inquiries concerning this decision should be directed to the undersigned at 571-272-6735.

Diane Goodwyn
Petitions Examiner
Office of Petitions

cc: MR. JOHNSON LIU
22308 CARINLOCH STREET
CALABASSAS, CA 91302

UNITED STATES PATENT AND TRADEMARK OFFICE

Commissioner for Patents
United States Patent and Trademark Office
P.O. Box 1450
Alexandria, VA 22313-1450
www.uspto.gov

FOLEY & LARDNER LLP
P.O. BOX 80278
SAN DIEGO, CA 92138-0278

COPY MAILED

NOV 0 7 2008

OFFICE OF PETITIONS

In re Application of	:	
Yajum GUO, et al	:	
Application No. 11/146,518	:	DECISION ON PETITION
Filed: June 6, 2005	:	TO WITHDRAW
Attorney Docket No. 22163-003003	:	FROM RECORD
	:	

This is a decision on the Request to Withdraw as attorney or agent of record under 37 C.F.R. § 1.36(b), filed September 5, 2008.

The request is **NOT APPROVED**.

The Office cannot approve the request at this time since the reason provided does not meet any of the conditions under the mandatory or permissive categories enumerated in 37 CFR 10.40. Section 10.40 of Title 37 of the Code of Federal Regulation states, "a practitioner shall not withdraw from employment in a proceeding before the Office without permission from the Office." More specifically, 37 CFR 10.40 states, "if paragraph (b) of this section is not applicable, a practitioner may not request permission to withdraw in matter pending before the Office unless such request or such withdrawal is" for one the permissive reasons listed in 37 CFR 10.40(c). The reason set forth in the request, "Foley & Lardner provided written notice of its intent to withdraw representation, does not meet any of the conditions set forth in 37 CFR 10.40.

A grantable request to withdraw as attorney/agent of record must be signed by every attorney/agent seeking to withdraw or contain a clear indication that one attorney is signing on behalf of another/others. The Office requires the practitioner(s) requesting withdrawal to certify that he, she, or they have: (1) given reasonable notice to the client, prior to the expiration of the response period, that the practitioner(s) intends to withdraw from employment; (2) delivered to the client or a duly authorized representative of the client all papers and property (including funds) to which the client is entitled; and (3) notified the client of any responses that may be due and the time frame within which the client must respond, pursuant 37 CFR 10.40(c).

The request cannot be approved because there is no indication that all of the acts noted above have been performed.

All future communications from the Office will continue to be directed to the above-listed address until otherwise notified by applicant.

Telephone inquiries concerning this decision should be directed to the undersigned at 571-272-6735.

Diane Goodwyn
Petitions Examiner
Office of Petitions

cc: MR. JOHNSON LIU
22308 CARINLOCH STREET
CALABASSAS, CA 91302

UNITED STATES PATENT AND TRADEMARK OFFICE

Commissioner for Patents
United States Patent and Trademark Office
P.O. Box 1450
Alexandria, VA 22313-1450
www.uspto.gov

MAILED
FROM DIRECTORS OFFICE

JAN 3 1 2006

TECHNOLOGY CENTER 3600

HENRY I. SCHANZER
29 BROOKFALL ROAD
EDISON, NJ 08817

In re application of
John L. Lowrance, et al
Application No. 11/146,521
Filed: June 7, 2005
For: MUZZLE REFERENCE SYSTEM

DECISION ON PETITION TO MAKE SPECIAL (APPLICANT'S AGE)

This is a decision on the petition submitted on December 7, 2005 under 37 CFR 1.102 (c) to make the above-identified application special under the accelerated examination procedure set forth in MPEP 708.02, Section IV: Applicant's Age.

The petition is **GRANTED**.

An application may be accorded special status upon the filing of a petition providing evidence showing that the applicant is at least 65 years old. Such a showing may be provided by evidence such as a birth certificate or a statement from the applicant.

The evidence submitted with the petition is a copy of John L. Lowrance's passport indicating that he is at least 65 years of age.

The examiner is directed (1) to make an interference search for possible interfering applications, (2) to promptly examine this application out of turn, and (3) if any interfering application is discovered, to examine such application simultaneously and state in the first official letter of such application that it is being taken out of turn because of a possible interference.

Petitioner is advised that this application will continue to be special, throughout its entire prosecution and pendency, including interference or appeal, if any, only if petitioner makes a prompt ***bona fide*** effort, in response to each Office action, to place the application in condition for allowance, even if it is necessary to conduct an interview with the examiner to accomplish this purpose.

SUMMARY: Petition to Make Special **GRANTED**.

Kenneth J. Dorner
Special Programs Examiner
Technology Center 3600
(571) 272-6587

KJD/dcg: 1/12/06